INDIANA DEPARTMENT OF ENVIRONMENTAL MANAGEMENT
We make Indiana a cleaner, healthier place to live.

Mitchell E. Daniels, Jr.
Governor

Thomas W. Easterly
Commissioner

100 North Senate Avenue
Indianapolis, Indiana 46204
(317) 232-8603
(800) 451-6027
www.IN.gov/idem

TO: Interested Parties / Applicant

DATE: March 25, 2008

RE: INEOS USA LLC, / 089-25489-00076

FROM: Matthew Stuckey, Deputy Branch Chief
Permits Branch
Office of Air Quality

Notice of Decision: Approval – Effective Immediately

Please be advised that on behalf of the Commissioner of the Department of Environmental Management, I have issued a decision regarding the enclosed matter. Pursuant to IC 13-15-5-3, this permit is effective immediately, unless a petition for stay of effectiveness is filed and granted, and may be revoked or modified in accordance with the provisions of IC 13-15-7-1.

If you wish to challenge this decision, IC 4-21.5-3-7 and IC 13-15-6-1(b) or IC 13-15-6-1(a) require that you file a petition for administrative review. This petition may include a request for stay of effectiveness and must be submitted to the Office of Environmental Adjudication, 100 North Senate Avenue, Government Center North, Suite N 501E, Indianapolis, IN 46204.

For an **initial Title V Operating Permit**, a petition for administrative review must be submitted to the Office of Environmental Adjudication within **thirty (30)** days from the receipt of this notice provided under IC 13-15-5-3, pursuant to IC 13-15-6-1(b).

For a **Title V Operating Permit renewal**, a petition for administrative review must be submitted to the Office of Environmental Adjudication within **fifteen (15)** days from the receipt of this notice provided under IC 13-15-5-3, pursuant to IC 13-15-6-1(a).

The filing of a petition for administrative review is complete on the earliest of the following dates that apply to the filing:
(1) the date the document is delivered to the Office of Environmental Adjudication (OEA);
(2) the date of the postmark on the envelope containing the document, if the document is mailed to OEA by U.S. mail; or
(3) The date on which the document is deposited with a private carrier, as shown by receipt issued by the carrier, if the document is sent to the OEA by private carrier.

The petition must include facts demonstrating that you are either the applicant, a person aggrieved or adversely affected by the decision or otherwise entitled to review by law. Please identify the permit, decision, or other order for which you seek review by permit number, name of the applicant, location, date of this notice and all of the following:

Recycled Paper An Equal Opportunity Employer *Please Recycle*

(1) the name and address of the person making the request;
(2) the interest of the person making the request;
(3) identification of any persons represented by the person making the request;
(4) the reasons, with particularity, for the request;
(5) the issues, with particularity, proposed for considerations at any hearing; and
(6) identification of the terms and conditions which, in the judgment of the person making the request, would be appropriate in the case in question to satisfy the requirements of the law governing documents of the type issued by the Commissioner.

Pursuant to 326 IAC 2-7-18(d), any person may petition the U.S. EPA to object to the issuance of an initial Title V operating permit, permit renewal, or modification within sixty (60) days of the end of the forty-five (45) day EPA review period. Such an objection must be based only on issues that were raised with reasonable specificity during the public comment period, unless the petitioner demonstrates that it was impractible to raise such issues, or if the grounds for such objection arose after the comment period.

To petition the U.S. EPA to object to the issuance of a Title V operating permit, contact:

U.S. Environmental Protection Agency
401 M Street
Washington, D.C. 20406

If you have technical questions regarding the enclosed documents, please contact the Office of Air Quality, Permits Branch at (317) 233-0178. Callers from within Indiana may call toll-free at 1-800-451-6027, ext. 3-0178.

Enclosures
FNTVOP.dot12/3/07

Mitchell E. Daniels, Jr.
Governor

Thomas W. Easterly
Commissioner

100 North Senate Avenue
MC 61-53 IGCN 1003
Indianapolis, Indiana 46204-2251
(317) 232-8603
(800) 451-6027
www.IN.gov/idem

PART 70 OPERATING PERMIT
OFFICE OF AIR QUALITY

INEOS USA LLC
2357 Standard Avenue
Whiting, Indiana 46394

(herein known as the Permittee) is hereby authorized to operate subject to the conditions contained herein, the source described in Section A (Source Summary) of this permit.

The Permittee must comply with all conditions of this permit. Noncompliance with any provisions of this permit is grounds for enforcement action; permit termination, revocation and reissuance, or modification; or denial of a permit renewal application. Noncompliance with any provision of this permit, except any provision specifically designated as not federally enforceable, constitutes a violation of the Clean Air Act. It shall not be a defense for the Permittee in an enforcement action that it would have been necessary to halt or reduce the permitted activity in order to maintain compliance with the conditions of this permit. An emergency does constitute an affirmative defense in an enforcement action provided the Permittee complies with the applicable requirements set forth in Section B, Emergency Provisions.

This permit is issued in accordance with 326 IAC 2 and 40 CFR Part 70 Appendix A and contains the conditions and provisions specified in 326 IAC 2-7 as required by 42 U.S.C. 7401, et. seq. (Clean Air Act as amended by the 1990 Clean Air Act Amendments), 40 CFR Part 70.6, IC 13-15 and IC 13-17. This permit also addresses certain new source review requirements for existing equipment and is intended to fulfill the new source review procedures pursuant to 326 IAC 2-2 and 326 IAC 2-7-10.5, applicable to those conditions.

Operation Permit No.: T089-25489-00076	
Original signed by: Matthew Stuckey, Deputy Branch Chief Permits Branch Office of Air Quality	Issuance Date: March 25, 2008 Expiration Date: March 25, 2013

TABLE OF CONTENTS

A. SOURCE SUMMARY 5
A.1 General Information [326 IAC 2-7-4(c)][326 IAC 2-7-5(15)][326 IAC 2-7-1(22)]
A.2 Emission Units and Pollution Control Equipment Summary [326 IAC 2-7-4(c)(3)] [326 IAC 2-7-5(15)]
A.3 Specifically Regulated Insignificant Activities [326 IAC 2-7-1(21)][326 IAC 2-7-4(c)] [326 IAC 2-7-5(15)]
A.4 Part 70 Permit Applicability [326 IAC 2-7-2]

B. GENERAL CONDITIONS 9
B.1 Definitions [326 IAC 2-7-1]
B.2 Permit Term [326 IAC 2-7-5(2)][326 IAC 2-1.1-9.5][326 IAC 2-7-4(a)(1)(D)] [IC 13-15-3-6(a)]
B.3 Term of Conditions [326 IAC 2-1.1-9.5]
B.4 Enforceability [326 IAC 2-7-7]
B.5 Severability [326 IAC 2-7-5(5)]
B.6 Property Rights or Exclusive Privilege [326 IAC 2-7-5(6)(D)]
B.7 Duty to Provide Information [326 IAC 2-7-5(6)(E)]
B.8 Certification [326 IAC 2-7-4(f)][326 IAC 2-7-6(1)][326 IAC 2-7-5(3)(C)]
B.9 Annual Compliance Certification [326 IAC 2-7-6(5)]
B.10 Preventive Maintenance Plan [326 IAC 2-7-5(1),(3) and (13)][326 IAC 2-7-6(1) and (6)] [326 IAC 1-6-3]
B.11 Emergency Provisions [326 IAC 2-7-16]
B.12 Permit Shield [326 IAC 2-7-15][326 IAC 2-7-20][326 IAC 2-7-12]
B.13 Prior Permits Superseded [326 IAC 2-1.1-9.5][326 IAC 2-7-10.5]
B.14 Termination of Right to Operate [326 IAC 2-7-10][326 IAC 2-7-4(a)]
B.15 Deviations from Permit Requirements and Conditions [326 IAC 2-7-5(3)(C)(ii)]
B.16 Permit Modification, Reopening, Revocation and Reissuance, or Termination [326 IAC 2-7-5(6)(C)][326 IAC 2-7-8(a)][326 IAC 2-7-9]
B.17 Permit Renewal [326 IAC 2-7-3][326 IAC 2-7-4][326 IAC 2-7-8(e)]
B.18 Permit Amendment or Modification [326 IAC 2-7-11][326 IAC 2-7-12]
B.19 Permit Revision Under Economic Incentives and Other Programs [326 IAC 2-7-5(8)] [326 IAC 2-7-12(b)(2)]
B.20 Operational Flexibility [326 IAC 2-7-20][326 IAC 2-7-10.5]
B.21 Source Modification Requirement [326 IAC 2-7-10.5] [326 IAC 2-3-2]
B.22 Inspection and Entry [326 IAC 2-7-6][IC 13-14-2-2][IC 13-30-3-1][IC 13-17-3-2]
B.23 Transfer of Ownership or Operational Control [326 IAC 2-7-11]
B.24 Annual Fee Payment [326 IAC 2-7-19] [326 IAC 2-7-5(7)][326 IAC 2-1.1-7]
B.25 Credible Evidence [326 IAC 2-7-5(3)][326 IAC 2-7-6][62 FR 8314] [326 IAC 1-1-6]

C. SOURCE OPERATION CONDITIONS 19

Emission Limitations and Standards [326 IAC 2-7-5(1)]
C.1 Opacity [326 IAC 5-1]
C.2 Open Burning [326 IAC 4-1] [IC 13-17-9]
C.3 Incineration [326 IAC 4-2] [326 IAC 9-1-2]
C.4 Fugitive Dust Emissions [326 IAC 6-4]
C.5 Stack Height [326 IAC 1-7]
C.6 Asbestos Abatement Projects [326 IAC 14-10] [326 IAC 18] [40 CFR 61, Subpart M]

Testing Requirements [326 IAC 2-7-6(1)]
C.7 Performance Testing [326 IAC 3-6]

Compliance Requirements [326 IAC 2-1.1-11]
C.8 Compliance Requirements [326 IAC 2-1.1-11]

Compliance Monitoring Requirements [326 IAC 2-7-5(1)][326 IAC 2-7-6(1)]
C.9 Compliance Monitoring [326 IAC 2-7-5(3)][326 IAC 2-7-6(1)]
C.10 Monitoring Methods [326 IAC 3] [40 CFR 60] [40 CFR 63]
C.11 Instrument Specifications [326 IAC 2-1.1-11] [326 IAC 2-7-5(3)] [326 IAC 2-7-6(1)]

Corrective Actions and Response Steps [326 IAC 2-7-5][326 IAC 2-7-6]
C.12 Risk Management Plan [326 IAC 2-7-5(12)] [40 CFR 68]
C.13 Response to Excursions or Exceedances [326 IAC 2-7-5] [326 IAC 2-7-6]
C.14 Actions Related to Noncompliance Demonstrated by a Stack Test [326 IAC 2-7-5] [326 IAC 2-7-6]

Record Keeping and Reporting Requirements [326 IAC 2-7-5(3)] [326 IAC 2-7-19]
C.15 Emission Statement [326 IAC 2-7-5(3)(C)(iii)][326 IAC 2-7-5(7)][326 IAC 2-7-19(c)] [326 IAC 2-6]
C.16 General Record Keeping Requirements [326 IAC 2-7-5(3)] [326 IAC 2-7-6]
C.17 General Reporting Requirements [326 IAC 2-7-5(3)(C)] [326 IAC 2-1.1-11]

Stratospheric Ozone Protection
C.18 Compliance with 40 CFR 82 and 326 IAC 22-1

D.1 EMISSIONS UNIT OPERATION CONDITIONS 27

Emission Limitations and Standards [326 IAC 2-7-5(1)]
D.1.1 Prevention of Significant Deterioration (PSD) Minor Limit, and Hazardous Air Pollutants (HAP) Limitation [326 IAC 2-2] [40 CFR 63, Subpart FFFF]
D.1.2 Emission Offset [326 IAC 2-3]
D.1.3 VOC BACT Requirements [326 IAC 8-1-6]
D.1.4 Particulate Matter (PM) [326 IAC 6-2-2]
D.1.5 Particulate Matter (PM) [326 IAC 6-3-2]
D.1.6 Preventive Maintenance Plan [326 IAC 2-7-5(13)]

Compliance Determination Requirements
D.1.7 VOC and HAP Control

Compliance Monitoring Requirements [326 IAC 2-7-5(1)][326 IAC 2-7-6(1)]
D.1.8 Flare Control Device Requirements

Record Keeping and Reporting Requirements [326 IAC 2-7-5(3)] [326 IAC 2-7-19]
D.1.9 Record Keeping Requirements [326 IAC 2-7-5(3)] [326 IAC 2-7-19]
D.1.10 Reporting Requirements

D.2 EMISSIONS UNIT OPERATION CONDITIONS 31

Emission Limitations and Standards [326 IAC 2-7-5(1)]
D.2.1 Volatile Organic Compounds (VOC) [326 IAC 8-3-2]
D.2.2 Volatile Organic Compounds (VOC) [326 IAC 8-3-8]
D.2.3 Volatile Organic Compounds (VOC) [326 IAC 8-9]

Record Keeping and Reporting Requirement [326 IAC 2-7-5(3)] [326 IAC 2-7-19]
D.2.4 Record Keeping Requirements

E.1 FACILITY OPERATION CONDITIONS 34

E.1.1 General Provisions Relating to New Source Performance Standards [326 IAC 12-1] [40 CFR Part 60, Subpart A]
E.1.2 Standards of Performance for Equipment Leaks of VOC in the Synthetic Organic Chemicals Manufacturing Industry [40 CFR Part 60, Subpart VV] [326 IAC 12]

E.2 FACILITY OPERATION CONDITIONS 36

E.2.1 General Provisions Relating to National Emissions Standards for Hazardous Air Pollutants under 40 CFR Part 61 [326 IAC 14-1] [40 CFR Part 61, Subpart A]
E.2.2 National Emissions Standards for Hazardous Air Pollutants for Benzene Waste Operations: Requirements [40 CFR Part 61, Subpart FF] [326 IAC 14]

E.3 FACILITY OPERATION CONDITIONS 38

E.3.1 General Provisions Relating to New Source Performance Standards [326 IAC 12-1] [40 CFR Part 60, Subpart A]
E.3.2 Standards of Performance for Volatile Organic Liquid Storage Vessels (Including Petroleum Liquid Storage Vessels) [40 CFR Part 60, Subpart Kb] [326 IAC 12]

Certification 39
Emergency Occurrence Report 40
Quarterly Report..... 42-43
Quarterly Deviation and Compliance Monitoring Report 44

Attachment A: Part 60—Standards of Performance for New Stationary Sources; Subpart A—General Provisions For Flares (40 CFR 60.18(b))

Attachment B: Subpart VV—Standards of Performance for Equipment Leaks of VOC in the Synthetic Organic Chemicals Manufacturing Industry for which Construction, Reconstruction, or Modification Commenced After January 5, 1981, and on or Before November 7, 2006

Attachment C: Subpart FF — National Emission Standard for Benzene Waste Operations

Attachment D: Subpart Kb—Standards of Performance for Volatile Organic Liquid Storage Vessels (Including Petroleum Liquid Storage Vessels) for Which Construction, Reconstruction, or Modification Commenced After July 23, 1984

SECTION A SOURCE SUMMARY

This permit is based on information requested by the Indiana Department of Environmental Management (IDEM), Office of Air Quality (OAQ). The information describing the source contained in conditions A.1 A.3, and A.4 is descriptive information and does not constitute enforceable conditions. However, the Permittee should be aware that a physical change or a change in the method of operation that may render this descriptive information obsolete or inaccurate may trigger requirements for the Permittee to obtain additional permits or seek modification of this permit pursuant to 326 IAC 2, or change other applicable requirements presented in the permit application.

A.1 General Information [326 IAC 2-7-4(c)][326 IAC 2-7-5(15)][326 IAC 2-7-1(22)]

The Permittee owns and operates a stationary existing chemical plant that manufactures polybutene from a butane/butene mixture by a catalytic polymerization reaction using aluminum chloride as a catalyst.

Source Address:	2357 Standard Avenue, Whiting, Indiana 46394
Mailing Address:	2357 Standard Avenue, Whiting, Indiana 46394
General Source Phone Number:	(219) 473-7085
SIC Code:	2821
County Location:	Lake
Source Location Status:	Nonattainment for 8-hour ozone standard Nonattainment for PM 2.5 standard Attainment for all other criteria pollutants
Source Status:	Part 70 Operating Permit Program Minor Source, under PSD Rules and Nonattainment NSR Major Source, under Emission Offset Rules Major Source, Section 112 of the Clean Air Act 1 of 28 Source Categories

A.2 Emission Units and Pollution Control Equipment Summary [326 IAC 2-7-4(c)(3)] [326 IAC 2-7-5(15)]

This stationary source consists of the following emission units and pollution control devices:

(a) One (1) chemical plant used to manufacture polybutene from a butane/butene mixture by a catalytic polymerization reaction. The maximum production capacity of the chemical plant is 250 million pounds of polybutene per year. The chemical plant consists of the following emission units:

(1) One (1) unloading rack, identified as EU-2 and constructed in 1982, used for unloading raw materials from trucks and rail cars;

(2) One (1) product shipping rack, identified as EU-3 and constructed in 1982, with a maximum capacity of 325 gallons per minute, used for loading trucks and railcars with finished product;

(3) One (1) process heater, identified as EU-4 and constructed in 1982, with a maximum heat input capacity of 10 MMBtu per hour and fired using process gas or natural gas;

(4) One (1) vapor recovery unit (VRU), identified as EU-5 and constructed in 1982, used to condense C_3-C_4 hydrocarbons from unreacted butane and butene. The condensible hydrocarbons are transferred via pipeline to the refinery or via pipeline to the rail loading/unloading rack system, while the non-condensible hydrocarbons are transferred to the process heater EU-4 for use as fuel. The condensable and non-condensable hydrocarbons are routed to the PIB Flare during process upsets;

(5) One (1) rail loading/unloading rack system, identified as EU-7, constructed in

2006, including piping for butane/butene (BB) feed stock and spent BB, with a maximum capacity of 300 gallons per minute per car or a total of 2,084 cars per year, and consisting of six (6) rail loading/unloading locations on two (2) new rail sidings; and

(6) One (1) hydrotreater, identified as EU-8, constructed in 1991, with a maximum production capacity of 250 million pounds of polybutene per year.

VOC emissions from EU-2, EU-3, EU-5, EU-7, and EU-8 are controlled by the existing flare, identified as the PIB Flare. The PIB Flare has a maximum capacity of 540,000 pounds per hour of natural gas and process gas, and exhausts through stack SV-2. Emissions from the BP Whiting refinery's propylene loading and storage activities are also sent to the PIB Flare and combusted for VOC control. During VRU upsets, the condensible and non-condensible hydrocarbons from EU-5 are vented to the flare. Under NSPS, Subpart VV, the pumps, compressors, pressure relief devices in gas/vapor service, sampling connection systems, open-ended valves or lines, and valves of this process are considered to be affected facilities. Under NESHAP, Subpart FF, the benzene-containing hazardous waste stream(s) generated by the production of chemicals by chemical, thermal, physical, or biological processes for use as a product, co-product, by-product, or intermediate and is either treated, stored, or disposed of is considered to be an affected source.

(b) One (1) catalyst storage silo, identified as EU-1 and constructed in 1982, used to store aluminum chloride with a maximum throughput capacity of 228.31 pounds per hour, with particulate emissions controlled using a baghouse, which exhausts to stack SV-3.

A.3 Insignificant Activities [326 IAC 2-7-1(21)][326 IAC 2-7-4(c)][326 IAC 2-7-5(15)]

This stationary source also includes the following insignificant activities, as defined in 326 IAC 2-7-1(21):

(a) Paved and unpaved roads and parking lots with public access. [326 IAC 6-4]

(b) Emissions from a laboratory, as defined in 326 IAC 2-7-1(21)(D).

(c) One (1) fuel dispensing operation with emissions less than the insignificant activity emission thresholds in 326 IAC 2-7-1(21)(A) through (C). The dispensing facility consists of the following two (2) storage tanks:

(A) One (1) 500 gallon portable gasoline storage tank.

(B) One (1) 250 gallon portable diesel storage tank.

(d) Degreasing operations that do not exceed 145 gallons per twelve (12) months, and not subject to 326 IAC 20-6 [326 IAC 8-3-2][326 IAC 8-3-8].

(e) Cleaners and solvents with a vapor pressure equal to or less than 0.3 psia at 100^{N}F or 0.1 psia at 68^{N}F and for which the combined use for all materials does not exceed 145 gallons per 12 months.

(f) Closed loop heating and cooling systems.

(g) Activities associated with the treatment of wastewater streams with an oil and grease content less than or equal to 1% by volume.

(h) Noncontact cooling tower systems with either natural draft or forced and induced draft systems not regulated under a NESHAP, including one (1) cooling tower (identified as RT601), constructed in 1982, with a maximum capacity of 15,000 gallons of water per minute.

(i) Repair activities including the following:

(1) Replacement or repair of ESPs, bags in baghouses, and filters in other air filtration equipment.

(2) Heat exchanger cleaning and repair.

(3) Process vessel degassing and cleaning to prepare for internal repairs.

(j) Equipment used to collect any material that might be released during a malfunction, process upset, or spill cleanup, including catch tanks, temporary liquid separators, tanks, and fluid handling equipment.

(k) Blowdown for boilers, cooling towers, compressors, or pumps.

(l) Other emission units, not regulated by a NESHAP, with PM10, NOx, and SO_2 emissions less than five (5) pounds per hour or twenty-five (25) pounds per day, CO emissions less than twenty-five (25) pounds per day, VOC emissions less than three (3) pounds per hour or fifteen (15) pounds per day, lead emissions less than six-tenths (0.6) tons per year or three and twenty-nine hundredths (3.29) pounds per day, and emitting greater than one (1) pound per day but less than five (5) pounds per day or one (1) ton per year of a single HAP, or emitting greater than one (1) pound per day but less than twelve and five tenths (12.5) pounds per day or two and five tenths (2.5) ton per year of any combination of HAPs:

(1) One (1) internal floating roof, above-ground storage tank (identified as RF-144) used to store light polymer, with a maximum storage capacity of 81,000 gallons. This storage tank was originally installed in 1982 and modified in 1996. [40 CFR 60, Subpart Kb] [326 IAC 12]

Under 40 CFR 60, Subpart Kb, storage tank RF-144 is considered to be new volatile organic liquid storage tank.

(2) Twenty-three (23) fixed roof dome, above-ground storage tanks, each installed in 1982, including the following:

(A) Two (2) storage tanks (identified as RF-101 and RF-102) used to store polybutene product, each with a maximum storage capacity of 163,002 gallons and using a nitrogen blanket to prevent water entrainment. [326 IAC 8-9]

(B) One (1) storage tank (identified as RF-104) used to store polybutene product, with a maximum storage capacity of 127,092 gallons and using a nitrogen blanket to prevent water entrainment. [326 IAC 8-9]

(C) Two (2) storage tanks (identified as RF-105 and RF-106) used to store polybutene product, each with a maximum storage capacity of 88,116 gallons respectively and using a nitrogen blanket to prevent water entrainment. [326 IAC 8-9]

(D) Ten (10) storage tanks (identified as RF-107, RF-108, RF-109, RF-110, RF-112, RF-113, RF-114, RF-117, RF-118, and RF-119) used to store polybutene product, each with a maximum storage capacity of 300,804 gallons and using a nitrogen blanket to prevent water entrainment. [326 IAC 8-9]

(E) One (1) storage tank (identified as RF-131) used to store polybutene

product and hydrocarbons, with a maximum storage capacity of 23,940 gallons and using a nitrogen blanket to prevent water entrainment. [326 IAC 8-9]

(F) One (1) storage tank (identified as RF-132) used to store polybutene product and hydrocarbons, with a maximum storage capacity of 90,678 gallons and using a nitrogen blanket to prevent water entrainment. [326 IAC 8-9]

(G) One (1) storage tank (identified as RF-133) used to store polybutene product, with a maximum storage capacity of 23,940 gallons and using a nitrogen blanket to prevent water entrainment. [326 IAC 8-9]

(H) One (1) storage tank (identified as RF-134) used to store polybutene product, with a maximum storage capacity of 90,678 gallons and using a nitrogen blanket to prevent water entrainment. [326 IAC 8-9]

(I) Two (2) storage tanks (identified as RF-141 and RF-142) used to store polybutene product, each with a maximum storage capacity of 127,092 gallons and using a nitrogen blanket to prevent water entrainment. [326 IAC 8-9]

(J) One (1) storage tank (identified as RF-143) used to store polybutene, with a maximum storage capacity of 127,092 gallons and using a nitrogen blanket to prevent water entrainment. [326 IAC 8-9]

(K) One (1) storage tank (identified as RF-145) used to store slop, with a maximum storage capacity of 88,000 gallons and using a nitrogen blanket to prevent water entrainment. [326 IAC 8-9]

(3) Pressurized hot oil storage drum (identified as SD-128), with a reservoir capacity of 6,765 gallons, and the associated hot oil system.

(4) Pressurized neutralizer storage drum (identified as SD-134), with a capacity of 1,128 gallons.

A.4 Part 70 Permit Applicability [326 IAC 2-7-2]

This stationary source is required to have a Part 70 permit by 326 IAC 2-7-2 (Applicability) because:

(a) It is a major source, as defined in 326 IAC 2-7-1(22);

(b) It is a source in a source category designated by the United States Environmental Protection Agency (U.S. EPA) under 40 CFR 70.3 (Part 70 - Applicability).

SECTION B GENERAL CONDITIONS

B.1 Definitions [326 IAC 2-7-1]

Terms in this permit shall have the definition assigned to such terms in the referenced regulation. In the absence of definitions in the referenced regulation, the applicable definitions found in the statutes or regulations (IC 13-11, 326 IAC 1-2 and 326 IAC 2-7) shall prevail.

B.2 Permit Term [326 IAC 2-7-5(2)][326 IAC 2-1.1-9.5][326 IAC 2-7-4(a)(1)(D)][IC 13-15-3-6(a)]

(a) This permit, T089-25489-00076, is issued for a fixed term of five (5) years from the issuance date of this permit, as determined in accordance with IC 4-21.5-3-5(f) and IC 13-15-5-3. Subsequent revisions, modifications, or amendments of this permit do not affect the expiration date of this permit.

(b) If IDEM, OAQ, upon receiving a timely and complete renewal permit application, fails to issue or deny the permit renewal prior to the expiration date of this permit, this existing permit shall not expire and all terms and conditions shall continue in effect, including any permit shield provided in 326 IAC 2-7-15, until the renewal permit has been issued or denied.

B.3 Term of Conditions [326 IAC 2-1.1-9.5]

Notwithstanding the permit term of a permit to construct, a permit to operate, or a permit modification, any condition established in a permit issued pursuant to a permitting program approved in the state implementation plan shall remain in effect until:

(a) the condition is modified in a subsequent permit action pursuant to Title I of the Clean Air Act; or

(b) the emission unit to which the condition pertains permanently ceases operation.

B.4 Enforceability [326 IAC 2-7-7]

Unless otherwise stated, all terms and conditions in this permit, including any provisions designed to limit the source's potential to emit, are enforceable by IDEM, the United States Environmental Protection Agency (U.S. EPA) and by citizens in accordance with the Clean Air Act.

B.5 Severability [326 IAC 2-7-5(5)]

The provisions of this permit are severable; a determination that any portion of this permit is invalid shall not affect the validity of the remainder of the permit.

B.6 Property Rights or Exclusive Privilege [326 IAC 2-7-5(6)(D)]

This permit does not convey any property rights of any sort or any exclusive privilege.

B.7 Duty to Provide Information [326 IAC 2-7-5(6)(E)]

(a) The Permittee shall furnish to IDEM, OAQ, within a reasonable time, any information that IDEM, OAQ may request in writing to determine whether cause exists for modifying, revoking and reissuing, or terminating this permit, or to determine compliance with this permit. The submittal by the Permittee does require the certification by the "responsible official" as defined by 326 IAC 2-7-1(34). Upon request, the Permittee shall also furnish to IDEM, OAQ copies of records required to be kept by this permit.

(b) For information furnished by the Permittee to IDEM, OAQ, the Permittee may include a claim of confidentiality in accordance with 326 IAC 17.1. When furnishing copies of requested records directly to U. S. EPA, the Permittee may assert a claim of confidentiality in accordance with 40 CFR 2, Subpart B.

B.8 Certification [326 IAC 2-7-4(f)][326 IAC 2-7-6(1)][326 IAC 2-7-5(3)(C)]

(a) Where specifically designated by this permit or required by an applicable requirement, any application form, report, or compliance certification submitted shall contain certification by the "responsible official" of truth, accuracy, and completeness. This

certification shall state that, based on information and belief formed after reasonable inquiry, the statements and information in the document are true, accurate, and complete.

(b) One (1) certification shall be included, using the attached Certification Form, with each submittal requiring certification. One (1) certification may cover multiple forms in one (1) submittal.

(c) A "responsible official" is defined at 326 IAC 2-7-1(34).

B.9 Annual Compliance Certification [326 IAC 2-7-6(5)]

(a) The Permittee shall annually submit a compliance certification report which addresses the status of the source's compliance with the terms and conditions contained in this permit, including emission limitations, standards, or work practices. The initial certification shall cover the time period from the date of final permit issuance through December 31 of the same year. All subsequent certifications shall cover the time period from January 1 to December 31 of the previous year, and shall be submitted no later than April 15 of each year to:

Indiana Department of Environmental Management
Compliance Branch, Office of Air Quality
100 North Senate Avenue
MC 61-53 IGCN 1003
Indianapolis, Indiana 46204-2251

and

United States Environmental Protection Agency, Region V
Air and Radiation Division, Air Enforcement Branch - Indiana (AE-17J)
77 West Jackson Boulevard
Chicago, Illinois 60604-3590

(b) The annual compliance certification report required by this permit shall be considered timely if the date postmarked on the envelope or certified mail receipt, or affixed by the shipper on the private shipping receipt, is on or before the date it is due. If the document is submitted by any other means, it shall be considered timely if received by IDEM, OAQ, on or before the date it is due.

(c) The annual compliance certification report shall include the following:

(1) The appropriate identification of each term or condition of this permit that is the basis of the certification;

(2) The compliance status;

(3) Whether compliance was continuous or intermittent;

(4) The methods used for determining the compliance status of the source, currently and over the reporting period consistent with 326 IAC 2-7-5(3); and

(5) Such other facts, as specified in Sections D of this permit, as IDEM, OAQ may require to determine the compliance status of the source.

The submittal by the Permittee does require the certification by the "responsible official" as defined by 326 IAC 2-7-1(34).

B.10 Preventive Maintenance Plan [326 IAC 2-7-5(1),(3) and (13)][326 IAC 2-7-6(1) and (6)][326 IAC 1-6-3]

(a) If required by specific condition(s) in Section D of this permit, the Permittee shall prepare and maintain Preventive Maintenance Plans (PMPs) within ninety (90) days after issuance of this permit, including the following information on each facility:

(1) Identification of the individual(s) responsible for inspecting, maintaining, and repairing emission control devices;

(2) A description of the items or conditions that will be inspected and the inspection schedule for said items or conditions; and

(3) Identification and quantification of the replacement parts that will be maintained in inventory for quick replacement.

If, due to circumstances beyond the Permittee's control, the PMPs cannot be prepared and maintained within the above time frame, the Permittee may extend the date an additional ninety (90) days provided the Permittee notifies:

Indiana Department of Environmental Management
Compliance Branch, Office of Air Quality
100 North Senate Avenue
MC 61-53 IGCN 1003
Indianapolis, Indiana 46204-2251

The PMP extension notification does not require the certification by the "responsible official" as defined by 326 IAC 2-7-1(34).

(b) A copy of the PMPs shall be submitted to IDEM, OAQ upon request and within a reasonable time, and shall be subject to review and approval by IDEM, OAQ. IDEM, OAQ may require the Permittee to revise its PMPs whenever lack of proper maintenance causes or is the primary contributor to an exceedance of any limitation on emissions or potential to emit. The PMPs do not require the certification by the "responsible official" as defined by 326 IAC 2-7-1(34).

(c) To the extent the Permittee is required by 40 CFR Part 60/63 to have an Operation Maintenance, and Monitoring (OMM) Plan for a unit, such Plan is deemed to satisfy the PMP requirements of 326 IAC 1-6-3 for that unit.

B.11 Emergency Provisions [326 IAC 2-7-16]

(a) An emergency, as defined in 326 IAC 2-7-1(12), is not an affirmative defense for an action brought for noncompliance with a federal or state health-based emission limitation.

(b) An emergency, as defined in 326 IAC 2-7-1(12), constitutes an affirmative defense to an action brought for noncompliance with a technology-based emission limitation if the affirmative defense of an emergency is demonstrated through properly signed, contemporaneous operating logs or other relevant evidence that describe the following:

(1) An emergency occurred and the Permittee can, to the extent possible, identify the causes of the emergency;

(2) The permitted facility was at the time being properly operated;

(3) During the period of an emergency, the Permittee took all reasonable steps to minimize levels of emissions that exceeded the emission standards or other requirements in this permit;

(4) For each emergency lasting one (1) hour or more, the Permittee notified IDEM, OAQ, and Northwest Regional Office within four (4) daytime business hours after

the beginning of the emergency, or after the emergency was discovered or reasonably should have been discovered;

Telephone Number: 1-800-451-6027 (ask for Office of Air Quality, Compliance Section), or
Telephone Number: 317-233-0178 (ask for Compliance Section)
Facsimile Number: 317-233-6865
Northwest Regional Office phone: (219) 757-0265; fax: (219) 757-0267**.**

(5) For each emergency lasting one (1) hour or more, the Permittee submitted the attached Emergency Occurrence Report Form or its equivalent, either by mail or facsimile to:

Indiana Department of Environmental Management
Compliance Branch, Office of Air Quality
100 North Senate Avenue
MC 61-53 IGCN 1003
Indianapolis, Indiana 46204-2251

within two (2) working days of the time when emission limitations were exceeded due to the emergency.

The notice fulfills the requirement of 326 IAC 2-7-5(3)(C)(ii) and must contain the following:

(A) A description of the emergency;

(B) Any steps taken to mitigate the emissions; and

(C) Corrective actions taken.

The notification which shall be submitted by the Permittee does not require the certification by the "responsible official" as defined by 326 IAC 2-7-1(34).

(6) The Permittee immediately took all reasonable steps to correct the emergency.

(c) In any enforcement proceeding, the Permittee seeking to establish the occurrence of an emergency has the burden of proof.

(d) This emergency provision supersedes 326 IAC 1-6 (Malfunctions). This permit condition is in addition to any emergency or upset provision contained in any applicable requirement.

(e) The Permittee seeking to establish the occurrence of an emergency shall make records available upon request to ensure that failure to implement a PMP did not cause or contribute to an exceedance of any limitations on emissions. However, IDEM, OAQ may require that the Preventive Maintenance Plans required under 326 IAC 2-7-4(c)(9) be revised in response to an emergency.

(f) Failure to notify IDEM, OAQ by telephone or facsimile of an emergency lasting more than one (1) hour in accordance with (b)(4) and (5) of this condition shall constitute a violation of 326 IAC 2-7 and any other applicable rules.

(g) If the emergency situation causes a deviation from a technology-based limit, the Permittee may continue to operate the affected emitting facilities during the emergency provided the Permittee immediately takes all reasonable steps to correct the emergency and minimize emissions.

(h) The Permittee shall include all emergencies in the Quarterly Deviation and Compliance Monitoring Report.

B.12 Permit Shield [326 IAC 2-7-15][326 IAC 2-7-20][326 IAC 2-7-12]

(a) Pursuant to 326 IAC 2-7-15, the Permittee has been granted a permit shield. The permit shield provides that compliance with the conditions of this permit shall be deemed compliance with any applicable requirements as of the date of permit issuance, provided that either the applicable requirements are included and specifically identified in this permit or the permit contains an explicit determination or concise summary of a determination that other specifically identified requirements are not applicable. The Indiana statutes from IC 13 and rules from 326 IAC, referenced in conditions in this permit, are those applicable at the time the permit was issued. The issuance or possession of this permit shall not alone constitute a defense against an alleged violation of any law, regulation or standard, except for the requirement to obtain a Part 70 permit under 326 IAC 2-7 or for applicable requirements for which a permit shield has been granted.

This permit shield does not extend to applicable requirements which are promulgated after the date of issuance of this permit unless this permit has been modified to reflect such new requirements.

(b) If, after issuance of this permit, it is determined that the permit is in nonconformance with an applicable requirement that applied to the source on the date of permit issuance, IDEM, OAQ, shall immediately take steps to reopen and revise this permit and issue a compliance order to the Permittee to ensure expeditious compliance with the applicable requirement until the permit is reissued. The permit shield shall continue in effect so long as the Permittee is in compliance with the compliance order.

(c) No permit shield shall apply to any permit term or condition that is determined after issuance of this permit to have been based on erroneous information supplied in the permit application. Erroneous information means information that the Permittee knew to be false, or in the exercise of reasonable care should have been known to be false, at the time the information was submitted.

(d) Nothing in 326 IAC 2-7-15 or in this permit shall alter or affect the following:

(1) The provisions of Section 303 of the Clean Air Act (emergency orders), including the authority of the U.S. EPA under Section 303 of the Clean Air Act;

(2) The liability of the Permittee for any violation of applicable requirements prior to or at the time of this permit's issuance;

(3) The applicable requirements of the acid rain program, consistent with Section 408(a) of the Clean Air Act; and

(4) The ability of U.S. EPA to obtain information from the Permittee under Section 114 of the Clean Air Act.

(e) This permit shield is not applicable to any change made under 326 IAC 2-7-20(b)(2) (Sections 502(b)(10) of the Clean Air Act changes) and 326 IAC 2-7-20(c)(2) (trading based on State Implementation Plan (SIP) provisions).

(f) This permit shield is not applicable to modifications eligible for group processing until after IDEM, OAQ, has issued the modifications. [326 IAC 2-7-12(c)(7)]

(g) This permit shield is not applicable to minor Part 70 permit modifications until after IDEM, OAQ, has issued the modification. [326 IAC 2-7-12(b)(8)]

B.13 Prior Permits Superseded [326 IAC 2-1.1-9.5][326 IAC 2-7-10.5]

(a) All terms and conditions of permits established prior to T089-25489-00076 and issued pursuant to permitting programs approved into the state implementation plan have been either:

(1) incorporated as originally stated,

(2) revised under 326 IAC 2-7-10.5, or

(3) deleted under 326 IAC 2-7-10.5.

(b) Provided that all terms and conditions are accurately reflected in this combined permit, all previous registrations and permits are superseded by this combined new source review and part 70 operating permit.

B.14 Termination of Right to Operate [326 IAC 2-7-10][326 IAC 2-7-4(a)]

The Permittee's right to operate this source terminates with the expiration of this permit unless a timely and complete renewal application is submitted at least nine (9) months prior to the date of expiration of the source's existing permit, consistent with 326 IAC 2-7-3 and 326 IAC 2-7-4(a).

B.15 Deviations from Permit Requirements and Conditions [326 IAC 2-7-5(3)(C)(ii)]

(a) Deviations from any permit requirements (for emergencies see Section B - Emergency Provisions), the probable cause of such deviations, and any response steps or preventive measures taken shall be reported to:

Indiana Department of Environmental Management
Compliance Data Section, Office of Air Quality
100 North Senate Avenue
MC 61-53 IGCN 1003
Indianapolis, Indiana 46204-2251

using the attached Quarterly Deviation and Compliance Monitoring Report, or its equivalent. A deviation required to be reported pursuant to an applicable requirement that exists independent of this permit, shall be reported according to the schedule stated in the applicable requirement and does not need to be included in this report.

The Quarterly Deviation and Compliance Monitoring Report does require the certification by the "responsible official" as defined by 326 IAC 2-7-1(34).

(b) A deviation is an exceedance of a permit limitation or a failure to comply with a requirement of the permit.

B.16 Permit Modification, Reopening, Revocation and Reissuance, or Termination [326 IAC 2-7-5(6)(C)][326 IAC 2-7-8(a)][326 IAC 2-7-9]

(a) This permit may be modified, reopened, revoked and reissued, or terminated for cause. The filing of a request by the Permittee for a Part 70 Operating Permit modification, revocation and reissuance, or termination, or of a notification of planned changes or anticipated noncompliance does not stay any condition of this permit.
[326 IAC 2-7-5(6)(C)] The notification by the Permittee does require the certification by the "responsible official" as defined by 326 IAC 2-7-1(34).

(b) This permit shall be reopened and revised under any of the circumstances listed in IC 13-15-7-2 or if IDEM, OAQ determines any of the following:

(1) That this permit contains a material mistake.

(2) That inaccurate statements were made in establishing the emissions standards or other terms or conditions.

(3) That this permit must be revised or revoked to assure compliance with an applicable requirement. [326 IAC 2-7-9(a)(3)]

(c) Proceedings by IDEM, OAQ to reopen and revise this permit shall follow the same procedures as apply to initial permit issuance and shall affect only those parts of this permit for which cause to reopen exists. Such reopening and revision shall be made as expeditiously as practicable. [326 IAC 2-7-9(b)]

(d) The reopening and revision of this permit, under 326 IAC 2-7-9(a), shall not be initiated before notice of such intent is provided to the Permittee by IDEM, OAQ at least thirty (30) days in advance of the date this permit is to be reopened, except that IDEM, OAQ may provide a shorter time period in the case of an emergency. [326 IAC 2-7-9(c)]

B.17 Permit Renewal [326 IAC 2-7-3][326 IAC 2-7-4][326 IAC 2-7-8(e)]

(a) The application for renewal shall be submitted using the application form or forms prescribed by IDEM, OAQ and shall include the information specified in 326 IAC 2-7-4. Such information shall be included in the application for each emission unit at this source, except those emission units included on the trivial or insignificant activities list contained in 326 IAC 2-7-1(21) and 326 IAC 2-7-1(40). The renewal application does require the certification by the "responsible official" as defined by 326 IAC 2-7-1(34).

Request for renewal shall be submitted to:

Indiana Department of Environmental Management
Permits Branch, Office of Air Quality
100 North Senate Avenue
MC 61-53 IGCN 1003
Indianapolis, Indiana 46204-2251

(b) A timely renewal application is one that is:

(1) Submitted at least nine (9) months prior to the date of the expiration of this permit; and

(2) If the date postmarked on the envelope or certified mail receipt, or affixed by the shipper on the private shipping receipt, is on or before the date it is due. If the document is submitted by any other means, it shall be considered timely if received by IDEM, OAQ on or before the date it is due.

(c) If the Permittee submits a timely and complete application for renewal of this permit, the source's failure to have a permit is not a violation of 326 IAC 2-7 until IDEM, OAQ takes final action on the renewal application, except that this protection shall cease to apply if, subsequent to the completeness determination, the Permittee fails to submit by the deadline specified in writing by IDEM, OAQ any additional information identified as being needed to process the application.

B.18 Permit Amendment or Modification [326 IAC 2-7-11][326 IAC 2-7-12]

(a) Permit amendments and modifications are governed by the requirements of 326 IAC 2-7-11 or 326 IAC 2-7-12 whenever the Permittee seeks to amend or modify this permit.

(b) Any application requesting an amendment or modification of this permit shall be submitted to:

Indiana Department of Environmental Management
Permits Branch, Office of Air Quality
100 North Senate Avenue
MC 61-53 IGCN 1003
Indianapolis, Indiana 46204-2251

Any such application shall be certified by the "responsible official" as defined by 326 IAC 2-7-1(34).

(c) The Permittee may implement administrative amendment changes addressed in the request for an administrative amendment immediately upon submittal of the request. [326 IAC 2-7-11(c)(3)]

B.19 Permit Revision Under Economic Incentives and Other Programs [326 IAC 2-7-5(8)][326 IAC 2-7-12(b)(2)]

(a) No Part 70 permit revision shall be required under any approved economic incentives, marketable Part 70 permits, emissions trading, and other similar programs or processes for changes that are provided for in a Part 70 permit.

(b) Notwithstanding 326 IAC 2-7-12(b)(1) and 326 IAC 2-7-12(c)(1), minor Part 70 permit modification procedures may be used for Part 70 modifications involving the use of economic incentives, marketable Part 70 permits, emissions trading, and other similar approaches to the extent that such minor Part 70 permit modification procedures are explicitly provided for in the applicable State Implementation Plan (SIP) or in applicable requirements promulgated or approved by the U.S. EPA.

B.20 Operational Flexibility [326 IAC 2-7-20][326 IAC 2-7-10.5]

(a) The Permittee may make any change or changes at the source that are described in 326 IAC 2-7-20(b),(c), or (e) without a prior permit revision, if each of the following conditions is met:

(1) The changes are not modifications under any provision of Title I of the Clean Air Act;

(2) Any preconstruction approval required by 326 IAC 2-7-10.5 has been obtained;

(3) The changes do not result in emissions which exceed the limitations provided in this permit (whether expressed herein as a rate of emissions or in terms of total emissions);

(4) The Permittee notifies the:

Indiana Department of Environmental Management
Permits Branch, Office of Air Quality
100 North Senate Avenue
MC 61-53 IGCN 1003
Indianapolis, Indiana 46204-2251

and

United States Environmental Protection Agency, Region V
Air and Radiation Division, Regulation Development Branch - Indiana (AR-18J)
77 West Jackson Boulevard
Chicago, Illinois 60604-3590

in advance of the change by written notification at least ten (10) days in advance of the proposed change. The Permittee shall attach every such notice to the Permittee's copy of this permit; and

(5) The Permittee maintains records on-site, on a rolling five (5) year basis, which document all such changes and emission trades that are subject to 326 IAC 2-7-20(b),(c), or (e). The Permittee shall make such records available, upon reasonable request, for public review.

Such records shall consist of all information required to be submitted to IDEM, OAQ in the notices specified in 326 IAC 2-7-20(b)(1), (c)(1), and (e)(2).

(b) The Permittee may make Section 502(b)(10) of the Clean Air Act changes (this term is defined at 326 IAC 2-7-1(36)) without a permit revision, subject to the constraint of 326 IAC 2-7-20(a). For each such Section 502(b)(10) of the Clean Air Act change, the required written notification shall include the following:

(1) A brief description of the change within the source;

(2) The date on which the change will occur;

(3) Any change in emissions; and

(4) Any permit term or condition that is no longer applicable as a result of the change.

The notification which shall be submitted is not considered an application form, report or compliance certification. Therefore, the notification by the Permittee does not require the certification by the “responsible official” as defined by 326 IAC 2-7-1(34).

(c) Emission Trades [326 IAC 2-7-20(c)]
The Permittee may trade emissions increases and decreases at the source, where the applicable SIP provides for such emission trades without requiring a permit revision, subject to the constraints of Section (a) of this condition and those in 326 IAC 2-7-20(c).

(d) Alternative Operating Scenarios [326 IAC 2-7-20(d)]
The Permittee may make changes at the source within the range of alternative operating scenarios that are described in the terms and conditions of this permit in accordance with 326 IAC 2-7-5(9). No prior notification of IDEM, OAQ, or U.S. EPA is required.

(e) Backup fuel switches specifically addressed in, and limited under, Section D of this permit shall not be considered alternative operating scenarios. Therefore, the notification requirements of part (a) of this condition do not apply.

B.21 Source Modification Requirement [326 IAC 2-7-10.5] [326 IAC 2-3-2]

(a) A modification, construction, or reconstruction is governed by the requirements of 326 IAC 2 and 326 IAC 2-7-10.5.

(b) Any modification at an existing major source is governed by the requirements of 326 IAC 2-3-2.

B.22 Inspection and Entry [326 IAC 2-7-6][IC 13-14-2-2][IC 13-30-3-1][IC 13-17-3-2]

Upon presentation of proper identification cards, credentials, and other documents as may be required by law, and subject to the Permittee’s right under all applicable laws and regulations to assert that the information collected by the agency is confidential and entitled to be treated as such, the Permittee shall allow IDEM, OAQ, U.S. EPA, or an authorized representative to perform the following:

(a) Enter upon the Permittee's premises where a Part 70 source is located, or emissions related activity is conducted, or where records must be kept under the conditions of this permit;

(b) As authorized by the Clean Air Act, IC 13-14-2-2, IC 13-17-3-2, and IC 13-30-3-1, have access to and copy any records that must be kept under the conditions of this permit;

(c) As authorized by the Clean Air Act, IC 13-14-2-2, IC 13-17-3-2, and IC 13-30-3-1, inspect any facilities, equipment (including monitoring and air pollution control equipment), practices, or operations regulated or required under this permit;

(d) As authorized by the Clean Air Act, IC 13-14-2-2, IC 13-17-3-2, and IC 13-30-3-1, sample or monitor substances or parameters for the purpose of assuring compliance with this permit or applicable requirements; and

(e) As authorized by the Clean Air Act, IC 13-14-2-2, IC 13-17-3-2, and IC 13-30-3-1, utilize any photographic, recording, testing, monitoring, or other equipment for the purpose of assuring compliance with this permit or applicable requirements.

B.23 Transfer of Ownership or Operational Control [326 IAC 2-7-11]

(a) The Permittee must comply with the requirements of 326 IAC 2-7-11 whenever the Permittee seeks to change the ownership or operational control of the source and no other change in the permit is necessary.

(b) Any application requesting a change in the ownership or operational control of the source shall contain a written agreement containing a specific date for transfer of permit responsibility, coverage and liability between the current and new Permittee. The application shall be submitted to:

Indiana Department of Environmental Management
Permits Branch, Office of Air Quality
100 North Senate Avenue
MC 61-53 IGCN 1003
Indianapolis, Indiana 46204-2251

The application which shall be submitted by the Permittee does require the certification by the "responsible official" as defined by 326 IAC 2-7-1(34).

(c) The Permittee may implement administrative amendment changes addressed in the request for an administrative amendment immediately upon submittal of the request. [326 IAC 2-7-11(c)(3)]

B.24 Annual Fee Payment [326 IAC 2-7-19] [326 IAC 2-7-5(7)][326 IAC 2-1.1-7]

(a) The Permittee shall pay annual fees to IDEM, OAQ within thirty (30) calendar days of receipt of a billing. Pursuant to 326 IAC 2-7-19(b), if the Permittee does not receive a bill from IDEM, OAQ the applicable fee is due April 1 of each year.

(b) Except as provided in 326 IAC 2-7-19(e), failure to pay may result in administrative enforcement action or revocation of this permit.

(c) The Permittee may call the following telephone numbers: 1-800-451-6027 or 317-233-4230 (ask for OAQ, Billing, Licensing, and Training Section), to determine the appropriate permit fee.

B.25 Credible Evidence [326 IAC 2-7-5(3)][326 IAC 2-7-6][62 FR 8314] [326 IAC 1-1-6]

For the purpose of submitting compliance certifications or establishing whether or not the Permittee has violated or is in violation of any condition of this permit, nothing in this permit shall preclude the use, including the exclusive use, of any credible evidence or information relevant to whether the Permittee would have been in compliance with the condition of this permit if the appropriate performance or compliance test or procedure had been performed.

SECTION C SOURCE OPERATION CONDITIONS

Entire Source

Emission Limitations and Standards [326 IAC 2-7-5(1)]

C.1 Opacity [326 IAC 5-1]

Pursuant to 326 IAC 5-1-2 (Opacity Limitations), except as provided in 326 IAC 5-1-3 (Temporary Alternative Opacity Limitations), opacity shall meet the following, unless otherwise stated in this permit:

(a) Opacity shall not exceed an average of twenty percent (20%) in any one (1) six (6) minute averaging period as determined in 326 IAC 5-1-4.

(b) Opacity shall not exceed sixty percent (60%) for more than a cumulative total of fifteen (15) minutes (sixty (60) readings as measured according to 40 CFR 60, Appendix A, Method 9 or fifteen (15) one (1) minute nonoverlapping integrated averages for a continuous opacity monitor) in a six (6) hour period.

C.2 Open Burning [326 IAC 4-1] [IC 13-17-9]

The Permittee shall not open burn any material except as provided in 326 IAC 4-1-3, 326 IAC 4-1-4 or 326 IAC 4-1-6. The previous sentence notwithstanding, the Permittee may open burn in accordance with an open burning approval issued by the Commissioner under 326 IAC 4-1-4.1.

C.3 Incineration [326 IAC 4-2] [326 IAC 9-1-2]

The Permittee shall not operate an incinerator or incinerate any waste or refuse except as provided in 326 IAC 4-2 and 326 IAC 9-1-2.

C.4 Fugitive Dust Emissions [326 IAC 6-4]

The Permittee shall not allow fugitive dust to escape beyond the property line or boundaries of the property, right-of-way, or easement on which the source is located, in a manner that would violate 326 IAC 6-4 (Fugitive Dust Emissions).

C.5 Stack Height [326 IAC 1-7]

The Permittee shall comply with the applicable provisions of 326 IAC 1-7 (Stack Height Provisions), for all exhaust stacks through which a potential (before controls) of twenty-five (25) tons per year or more of particulate matter or sulfur dioxide is emitted.

C.6 Asbestos Abatement Projects [326 IAC 14-10] [326 IAC 18] [40 CFR 61, Subpart M]

(a) Notification requirements apply to each owner or operator. If the combined amount of regulated asbestos containing material (RACM) to be stripped, removed or disturbed is at least 260 linear feet on pipes or 160 square feet on other facility components, or at least thirty-five (35) cubic feet on all facility components, then the notification requirements of 326 IAC 14-10-3 are mandatory. All demolition projects require notification whether or not asbestos is present.

(b) The Permittee shall ensure that a written notification is sent on a form provided by the Commissioner at least ten (10) working days before asbestos stripping or removal work or before demolition begins, per 326 IAC 14-10-3, and shall update such notice as necessary, including, but not limited to the following:

(1) When the amount of affected asbestos containing material increases or decreases by at least twenty percent (20%); or

(2) If there is a change in the following:

(A) Asbestos removal or demolition start date;

(B) Removal or demolition contractor; or

(C) Waste disposal site.

(c) The Permittee shall ensure that the notice is postmarked or delivered according to the guidelines set forth in 326 IAC 14-10-3(2).

(d) The notice to be submitted shall include the information enumerated in 326 IAC 14-10-3(3).

All required notifications shall be submitted to:

Indiana Department of Environmental Management
Asbestos Section, Office of Air Quality
100 North Senate Avenue
MC 61-52 IGCN 1003
Indianapolis, Indiana 46204-2251

The notice shall include a signed certification from the owner or operator that the information provided in this notification is correct and that only Indiana licensed workers and project supervisors will be used to implement the asbestos removal project. The notifications do not require a certification by the "responsible official" as defined by 326 IAC 2-7-1(34).

(e) Procedures for Asbestos Emission Control
The Permittee shall comply with the applicable emission control procedures in 326 IAC 14-10-4 and 40 CFR 61.145(c). Per 326 IAC 14-10-1, emission control requirements are applicable for any removal or disturbance of RACM greater than three (3) linear feet on pipes or three (3) square feet on any other facility components or a total of at least 0.75 cubic feet on all facility components.

(f) Demolition and Renovation
The Permittee shall thoroughly inspect the affected facility or part of the facility where the demolition or renovation will occur for the presence of asbestos pursuant to 40 CFR 61.145(a).

(g) Indiana Accredited Asbestos Inspector
The Permittee shall comply with 326 IAC 14-10-1(a) that requires the owner or operator, prior to a renovation/demolition, to use an Indiana Accredited Asbestos Inspector to thoroughly inspect the affected portion of the facility for the presence of asbestos. The requirement to use an Indiana Accredited Asbestos inspector is not federally enforceable.

Testing Requirements [326 IAC 2-7-6(1)]

C.7 Performance Testing [326 IAC 3-6]

(a) All testing shall be performed according to the provisions of 326 IAC 3-6 (Source Sampling Procedures), except as provided elsewhere in this permit, utilizing any applicable procedures and analysis methods specified in 40 CFR 51, 40 CFR 60, 40 CFR 61, 40 CFR 63, 40 CFR 75, or other procedures approved by IDEM, OAQ.

A test protocol, except as provided elsewhere in this permit, shall be submitted to:

Indiana Department of Environmental Management
Compliance Data Section, Office of Air Quality
100 North Senate Avenue
MC 61-53 IGCN 1003
Indianapolis, Indiana 46204-2251

no later than thirty-five (35) days prior to the intended test date. The protocol submitted by the Permittee does not require certification by the "responsible official" as defined by 326 IAC 2-7-1(34).

(b) The Permittee shall notify IDEM, OAQ of the actual test date at least fourteen (14) days prior to the actual test date. The notification submitted by the Permittee does not require certification by the "responsible official" as defined by 326 IAC 2-7-1(34).

(c) Pursuant to 326 IAC 3-6-4(b), all test reports must be received by IDEM, OAQ not later than forty-five (45) days after the completion of the testing. An extension may be granted by IDEM, OAQ if the Permittee submits to IDEM, OAQ, a reasonable written explanation not later than five (5) days prior to the end of the initial forty-five (45) day period.

Compliance Requirements [326 IAC 2-1.1-11]

C.8 Compliance Requirements [326 IAC 2-1.1-11]

The commissioner may require stack testing, monitoring, or reporting at any time to assure compliance with all applicable requirements by issuing an order under 326 IAC 2-1.1-11. Any monitoring or testing shall be performed in accordance with 326 IAC 3 or other methods approved by the commissioner or the U. S. EPA.

Compliance Monitoring Requirements [326 IAC 2-7-5(1)][326 IAC 2-7-6(1)]

C.9 Compliance Monitoring [326 IAC 2-7-5(3)][326 IAC 2-7-6(1)]

Unless otherwise specified in this permit, all monitoring and record keeping requirements not already legally required shall be implemented within ninety (90) days of permit issuance. If required by Section D, the Permittee shall be responsible for installing any necessary equipment and initiating any required monitoring related to that equipment. If due to circumstances beyond its control, that equipment cannot be installed and operated within ninety (90) days, the Permittee may extend the compliance schedule related to the equipment for an additional ninety (90) days provided the Permittee notifies:

Indiana Department of Environmental Management
Compliance Branch, Office of Air Quality
100 North Senate Avenue
MC 61-53 IGCN 1003
Indianapolis, Indiana 46204-2251

in writing, prior to the end of the initial ninety (90) day compliance schedule, with full justification of the reasons for the inability to meet this date.

The notification which shall be submitted by the Permittee does require the certification by the "responsible official" as defined by 326 IAC 2-7-1(34).

Unless otherwise specified in the approval for the new emission unit(s), compliance monitoring for new emission units or emission units added through a source modification shall be implemented when operation begins.

C.10 Monitoring Methods [326 IAC 3] [40 CFR 60] [40 CFR 63]

Any monitoring or testing required by Section D of this permit shall be performed according to the provisions of 326 IAC 3, 40 CFR 60, Appendix A, 40 CFR 60, Appendix B, 40 CFR 63, or other approved methods as specified in this permit.

C.11 Instrument Specifications [326 IAC 2-1.1-11] [326 IAC 2-7-5(3)] [326 IAC 2-7-6(1)]

(a) When required by any condition of this permit, an analog instrument used to measure a parameter related to the operation of an air pollution control device shall have a scale such that the expected maximum reading for the normal range shall be no less than twenty percent (20%) of full scale.

(b) The Permittee may request that the IDEM, OAQ approve the use of an instrument that does not meet the above specifications provided the Permittee can demonstrate that an alternative instrument specification will adequately ensure compliance with permit conditions requiring the measurement of the parameters.

Corrective Actions and Response Steps [326 IAC 2-7-5][326 IAC 2-7-6]

C.12 Risk Management Plan [326 IAC 2-7-5(12)] [40 CFR 68]

If a regulated substance, as defined in 40 CFR 68, is present at a source in more than a threshold quantity, the Permittee must comply with the applicable requirements of 40 CFR 68.

C.13 Response to Excursions or Exceedances [326 IAC 2-7-5] [326 IAC 2-7-6]

(a) Upon detecting an excursion or exceedance, the Permittee shall restore operation of the emissions unit (including any control device and associated capture system) to its normal or usual manner of operation as expeditiously as practicable in accordance with good air pollution control practices for minimizing emissions.

(b) The response shall include minimizing the period of any startup, shutdown or malfunction and taking any necessary corrective actions to restore normal operation and prevent the likely recurrence of the cause of an excursion or exceedance (other than those caused by excused startup or shutdown conditions). Corrective actions may include, but are not limited to, the following:

(1) initial inspection and evaluation;

(2) recording that operations returned to normal without operator action (such as through response by a computerized distribution control system); or

(3) any necessary follow-up actions to return operation to within the indicator range, designated condition, or below the applicable emission limitation or standard, as applicable.

(c) A determination of whether the Permittee has used acceptable procedures in response to an excursion or exceedance will be based on information available, which may include, but is not limited to, the following:

(1) monitoring results;

(2) review of operation and maintenance procedures and records; and/or

(3) inspection of the control device, associated capture system, and the process.

(d) Failure to take reasonable response steps shall be considered a deviation from the permit.

(e) The Permittee shall maintain the following records:

(1) monitoring data;

(2) monitor performance data, if applicable; and

(3) corrective actions taken.

C.14 Actions Related to Noncompliance Demonstrated by a Stack Test [326 IAC 2-7-5][326 IAC 2-7-6]

(a) When the results of a stack test performed in conformance with Section C - Performance Testing, of this permit exceed the level specified in any condition of this permit, the Permittee shall take appropriate response actions. The Permittee shall submit a description of these response actions to IDEM, OAQ, within thirty (30) days of receipt of the test results. The Permittee shall take appropriate action to minimize excess emissions from the affected facility while the response actions are being implemented.

(b) A retest to demonstrate compliance shall be performed within one hundred twenty (120) days of receipt of the original test results. Should the Permittee demonstrate to IDEM, OAQ that retesting in one hundred twenty (120) days is not practicable, IDEM, OAQ may extend the retesting deadline.

(c) IDEM, OAQ reserves the authority to take any actions allowed under law in response to noncompliant stack tests.

The response action documents submitted pursuant to this condition do require the certification by the "responsible official" as defined by 326 IAC 2-7-1(34).

Record Keeping and Reporting Requirements [326 IAC 2-7-5(3)] [326 IAC 2-7-19]

C.15 Emission Statement [326 IAC 2-7-5(3)(C)(iii)][326 IAC 2-7-5(7)][326 IAC 2-7-19(c)][326 IAC 2-6]

(a) In accordance with the compliance schedule specified in 326 IAC 2-6-3(a)(1), the Permittee shall annually submit by July 1 an emission statement covering the previous calendar year:

(b) The emission statement required by this permit shall be considered timely if the date postmarked on the envelope or certified mail receipt, or affixed by the shipper on the private shipping receipt, is on or before the date it is due. If the document is submitted by any other means, it shall be considered timely if received by IDEM, OAQ on or before the date it is due.

C.16 General Record Keeping Requirements [326 IAC 2-7-5(3)] [326 IAC 2-7-6]

(a) Records of all required monitoring data, reports and support information required by this permit shall be retained for a period of at least five (5) years from the date of monitoring sample, measurement, report, or application. These records shall be physically present or electronically accessible at the source location for a minimum of three (3) years. The records may be stored elsewhere for the remaining two (2) years as long as they are available upon request. If the Commissioner makes a request for records to the Permittee, the Permittee shall furnish the records to the Commissioner within a reasonable time.

(b) Unless otherwise specified in this permit, all record keeping requirements not already legally required shall be implemented within ninety (90) days of permit issuance.

(c) If there is a “project” (as defined in 326 IAC 2-2-1(qq)) affecting an existing emissions unit other than a source with a Plantwide Applicability Limitation (PAL), which is not part of a “major modification” (as defined in 326 IAC 2-2-1(ee)) and the Permittee elects to utilize the “projected actual emissions” (as defined in 326 IAC 2-2-1(rr) and/or 326 IAC 2-3-1(mm)), the Permittee shall comply with following:

(1) Before beginning actual construction of the “project” (as defined in 326 IAC 2-2-1(qq) and/or 326 IAC 2-3-1(ll)) at an existing emissions unit,

document and maintain the following records:

(A) A description of the project.

(B) Identification of any emissions unit whose emissions of a regulated new source review pollutant could be affected by the project.

(C) A description of the applicability test used to determine that the project is not a major modification for any regulated NSR pollutant, including:

(i) Baseline actual emissions;

(ii) Projected actual emissions;

(iii) Amount of emissions excluded under section 326 IAC 2-2-1(rr)(2)(A)(iii) and/or 326 IAC 2-3-1 (mm)(2)(A)(iii); and

(iv) An explanation for why the amount was excluded, and any netting calculations, if applicable.

(2) Monitor the emissions of any regulated NSR pollutant that could increase as a result of the project and that is emitted by any existing emissions unit identified in (1)(B) above; and

(3) Calculate and maintain a record of the annual emissions, in tons per year on a calendar year basis, for a period of five (5) years following resumption of regular operations after the change, or for a period of ten (10) years following resumption of regular operations after the change if the project increases the design capacity of or the potential to emit that regulated NSR pollutant at the emissions unit.

C.17 General Reporting Requirements [326 IAC 2-7-5(3)(C)] [326 IAC 2-1.1-11]

(a) The Permittee shall submit the attached Quarterly Deviation and Compliance Monitoring Report or its equivalent. Any deviation from permit requirements, the date(s) of each deviation, the cause of the deviation, and the response steps taken must be reported. This report shall be submitted within thirty (30) days of the end of the reporting period. The Quarterly Deviation and Compliance Monitoring Report shall include the certification by the "responsible official" as defined by 326 IAC 2-7-1(34).

(b) The report required in (a) of this condition and reports required by conditions in Section D of this permit shall be submitted to:

Indiana Department of Environmental Management
Compliance Data Section, Office of Air Quality
100 North Senate Avenue
MC 61-53 IGCN 1003
Indianapolis, Indiana 46204-2251

(c) Unless otherwise specified in this permit, any notice, report, or other submission required by this permit shall be considered timely if the date postmarked on the envelope or certified mail receipt, or affixed by the shipper on the private shipping receipt, is on or before the date it is due. If the document is submitted by any other means, it shall be considered timely if received by IDEM, OAQ on or before the date it is due.

(d) Unless otherwise specified in this permit, all reports required in Section D of this permit shall be submitted within thirty (30) days of the end of the reporting period. All reports do require the certification by the "responsible official" as defined by 326 IAC 2-7-1(34).

(e) The first report shall cover the period commencing on the date of issuance of this permit and ending on the last day of the reporting period. Reporting periods are based on calendar years, unless otherwise specified in this permit. For the purpose of this permit "calendar year" means the twelve (12) month period from January 1 to December 31 inclusive.

(f) If the Permittee is required to comply with the recordkeeping provisions of (c) in Section C - General Record Keeping Requirements for any "project" (as defined in 326 IAC 2-2-1 (qq) and/or 326 IAC 2-3-1 (ll)) at an existing Electric Utility Steam Generating Unit, then for that project the Permittee shall:

(1) Submit to IDEM, OAQ a copy of the information required by (c)(1) in Section C - General Record Keeping Requirements

(2) Submit a report to IDEM, OAQ within sixty (60) days after the end of each year during which records are generated in accordance with (c)(2) and (3) in Section C - General Record Keeping Requirements. The report shall contain all information and data describing the annual emissions for the emissions units during the calendar year that preceded the submission of report.

Reports required in this part shall be submitted to:

Indiana Department of Environmental Management
Air Compliance Section, Office of Air Quality
100 North Senate Avenue
MC 61-53 IGCN 1003
Indianapolis, Indiana 46204-2251

(g) The report for project at an existing emissions unit shall be submitted within sixty (60) days after the end of the year and contain the following:

(1) The name, address, and telephone number of the major stationary source.

(2) The annual emissions calculated in accordance with (c)(2) and (3) in Section C - General Record Keeping Requirements.

(3) The emissions calculated under the actual-to-projected actual test stated in .

(4) Any other information that the Permittee deems fit to include in this report.

Reports required in this part shall be submitted to:

Indiana Department of Environmental Management
Air Compliance Section, Office of Air Quality
100 North Senate Avenue
MC 61-53 IGCN 1003
Indianapolis, Indiana 46204-2251

Stratospheric Ozone Protection

C.18 Compliance with 40 CFR 82 and 326 IAC 22-1

Pursuant to 40 CFR 82 (Protection of Stratospheric Ozone), Subpart F, except as provided for motor vehicle air conditioners in Subpart B, the Permittee shall comply with the standards for recycling and emissions reduction:

(a) Persons opening appliances for maintenance, service, repair, or disposal must comply with the required practices pursuant to 40 CFR 82.156.

(b) Equipment used during the maintenance, service, repair, or disposal of appliances must comply with the standards for recycling and recovery equipment pursuant to 40 CFR 82.158.

(c) Persons performing maintenance, service, repair, or disposal of appliances must be certified by an approved technician certification program pursuant to 40 CFR 82.161.

SECTION D.1 EMISSIONS UNIT OPERATION CONDITIONS

Emissions Unit Description [326 IAC 2-7-5(15)]

(a) One (1) chemical plant used to manufacture polybutene from a butane/butene mixture by a catalytic polymerization reaction. The maximum production capacity of the chemical plant is 250 million pounds of polybutene per year. The chemical plant consists of the following emission units:

(1) One (1) unloading rack, identified as EU-2 and constructed in 1982, used for unloading raw materials from trucks and rail cars;

(2) One (1) product shipping rack, identified as EU-3 and constructed in 1982, with a maximum capacity of 325 gallons per minute, used for loading trucks and railcars with finished product;

(3) One (1) process heater, identified as EU-4 and constructed in 1982, with a maximum heat input capacity of 10 MMBtu per hour and fired using process gas or natural gas;

(4) One (1) vapor recovery unit (VRU), identified as EU-5 and constructed in 1982, used to condense C_3-C_4 hydrocarbons from unreacted butane and butene. The condensible hydrocarbons are transferred via pipeline to the refinery or via pipeline to the rail loading/unloading rack system, while the non-condensible hydrocarbons are transferred to the process heater EU-4 for use as fuel. The condensable and non-condensable hydrocarbons are routed to the PIB Flare during process upsets;

(5) One (1) rail loading/unloading rack system, identified as EU-7, constructed in 2006, including piping for butane/butene (BB) feed stock and spent BB, with a maximum capacity of 300 gallons per minute per car or a total of 2,084 cars per year, and consisting of six (6) rail loading/unloading locations on two (2) new rail sidings; and

(6) One (1) hydrotreater, identified as EU-8, constructed in 1991, with a maximum production capacity of 250 million pounds of polybutene per year.

VOC emissions from EU-2, EU-3, EU-5, EU-7, and EU-8 are controlled by the existing flare, identified as the PIB Flare. The PIB Flare has a maximum capacity of 540,000 pounds per hour of natural gas and process gas, and exhausts through stack SV-2. Emissions from the BP Whiting refinery's propylene loading and storage activities are also sent to the PIB Flare and combusted for VOC control. During VRU upsets, the condensible and non-condensible hydrocarbons from EU-5 are vented to the flare. Under NSPS, Subpart VV, the pumps, compressors, pressure relief devices in gas/vapor service, sampling connection systems, open-ended valves or lines, and valves of this process are considered to be affected facilities. Under NESHAP, Subpart FF, the benzene-containing hazardous waste stream(s) generated by the production of chemicals by chemical, thermal, physical, or biological processes for use as a product, co-product, by-product, or intermediate and is either treated, stored, or disposed of is considered to be an affected source.

(b) One (1) catalyst storage silo, identified as EU-1 and constructed in 1982, used to store aluminum chloride with a maximum throughput capacity of 228.31 pounds per hour, with particulate emissions controlled using a baghouse, which exhausts to stack SV-3.

(The information describing the process contained in this emissions unit description box is descriptive information and does not constitute enforceable conditions.)

Emission Limitations and Standards [326 IAC 2-7-5(1)]

D.1.1 Prevention of Significant Deterioration (PSD) Minor Limit, and Hazardous Air Pollutants (HAP) Limitation [326 IAC 2-2] [40 CFR 63, Subpart FFFF]

In order to render the requirements of 326 IAC 2-2 (PSD) not applicable:

(a) The total input of VOC to the PIB Flare, which is used to control the emissions from the VRU (EU-5), Loading/ Unloading Racks (EU-2, EU-3, and EU-7), Neutralizer Tank (SD-134), Hydrotreater (EU-8), and Process Gas from the BP Whiting Refinery, shall not exceed 7,000 tons per twelve (12) consecutive month period, with compliance determined at the end of each month.

(b) The total input of 1,3-Butadiene to the PIB Flare, which is used to control the emissions from the VRU (EU-5), Loading/ Unloading Racks (EU-2, EU-3, and EU-7), Neutralizer Tank (SD-134), Hydrotreater (EU-8), and Process Gas from the BP Whiting Refinery, shall not exceed 900 tons per twelve (12) consecutive month period, with compliance determined at the end of each month.

(c) The overall VOC control efficiency for the PIB Flare (including the capture efficiency and destruction efficiency) shall be at least 99%.

(d) The overall 1,3-Butadiene control efficiency for the PIB Flare (including the capture efficiency and destruction efficiency) shall be at least 99%.

Combined with the VOC emissions from other emission units, the VOC emissions from the entire source are limited to less than one hundred (100) tons per year. Combined with the 1,3-Butadiene emissions from other emission units, the 1,3-Butadiene emissions from the entire source are limited to less than ten (10) tons per year. Therefore, the requirements of 326 IAC 2-2 (PSD) and 40 CFR 63, Subpart FFFF (Miscellaneous Organic Chemical Manufacturing) are not applicable.

D.1.2 Emission Offset [326 IAC 2-3]

In order to render the requirements of 326 IAC 2-3 (Emission Offset) not applicable:

(a) The total input of VOC to the Hydrotreater (EU-8) shall be less than 2,500 tons per twelve (12) consecutive month period, with compliance determined at the end of each month.

(b) The VOC emissions from the Hydrotreater (EU-8) shall be controlled by the PIB Flare.

(c) The overall VOC control efficiency for the PIB Flare (including the capture efficiency and destruction efficiency) shall be at least 99%.

Compliance with this limit provides that the net emission increase from the 1991 modification is below Emission Offset significant emission levels and renders the requirements of 326 IAC 2-3 (Emission Offset) not applicable.

D.1.3 VOC BACT Requirements [326 IAC 8-1-6]

Pursuant to 326 IAC 8-1-6 (BACT), and the Permittee shall collect and control the VOC emissions from the chemical plant using Best Available Control Technology (BACT). The BACT for these units has been determined to be the following:

(a) The VOC emissions from the chemical plant (EU-2, EU-3, EU-5, EU-7, and EU-8) shall be shall be collected and controlled by the flare identified as PIB Flare.

(b) The overall control efficiency of PIB Flare shall be at least 99% when controlling the VOC emissions from the chemical plant.

Compliance with these requirements will also make the Emission Offset requirements under 326 IAC 2-3 not applicable for VOC emissions.

D.1.4 Particulate Matter (PM) [326 IAC 6-2-2]

Pursuant to 326 IAC 6-2-2(c) (Particulate Emission Limitations for Sources of Indirect Heating), the PM emissions from EU-4 are limited to 0.60 pounds per MMBtu heat input.

D.1.5 Particulate Matter (PM) [326 IAC 6-3-2]

Pursuant to 326 IAC 6-3-2 (Particulate Emission Limitations for Manufacturing Processes), particulate emissions from the Catalyst Storage Silo (EU-1) shall not exceed 0.958 pound per hour. The pound per hour limitation was calculated using the following equation:

Interpolation of the data for the process weight rate up to sixty thousand (60,000) pounds per hour shall be accomplished by use of the equation:

$E = 4.10\ P^{0.67}$ where E = rate of emission in pounds per hour and
P = process weight rate in tons per hour

D.1.6 Preventive Maintenance Plan [326 IAC 2-7-5(13)]

A Preventive Maintenance Plan, in accordance with Section B - Preventive Maintenance Plan, of this permit, is required for EU-2, EU-3, EU-4, EU-5, EU-7, and EU-8 and the PIB Flare.

Compliance Determination Requirements

D.1.7 VOC and HAP Control

In order to comply with Conditions D.1.1 and D.1.2, the PIB Flare shall be in operation and control emissions from the chemical plant at all times when the chemical plant is in operation or when VOC and HAP emissions are being sent to the flare from the BP Whiting Refinery.

Compliance Monitoring Requirements [326 IAC 2-7-5(1)][326 IAC 2-7-6(1)]

D.1.8 Flare Control Device Requirements

(a) In order to demonstrate compliance with Conditions D.1.1 and D.1.2, the Permittee shall comply with the requirements of 40 CFR 60.18(b) (included as Attachment A) for the PIB Flare.

(b) The steam control valve that supplies steam to the PIB Flare shall be operated according to the manufacturer's operation and maintenance manual to vary steam flow with waste gas flow.

Record Keeping and Reporting Requirements [326 IAC 2-7-5(3)] [326 IAC 2-7-19]

D.1.9 Record Keeping Requirements [326 IAC 2-7-5(3)] [326 IAC 2-7-19]

(a) In order to document compliance with Conditions D.1.1, D.1.2, and D.1.8, the Permittee shall maintain the following records:

(1) Monthly records of the total amount of VOC delivered to the PIB Flare.

(2) Monthly records of the total amount of 1,3-Butadiene delivered to the PIB Flare.

(3) Measurements, engineering assessments, and calculations used to determine the amount of monthly VOC and 1,3-Butadiene delivered to the PIB Flare.

(4) Temperature or other parameters sufficient to demonstrate the presence of a pilot flame on the PIB Flare when the chemical plant is in operation or when VOC emissions are being sent to the PIB Flare from the BP Whiting Refinery.

(5) The position of the steam control valve that supplies steam to PIB Flare.

(6) A copy of the manufacturer's operation and maintenance manual that defines operating procedures that will ensure destruction efficiency at the flare.

(7) The design specifications for the flare, and make such records available upon request to IDEM, OAQ and the U.S. EPA.

(b) All records shall be maintained in accordance with Section C - General Record Keeping Requirements of this permit.

D.1.10 Reporting Requirements

A quarterly summary of the information to document compliance with Condition D.1.1(a) and D.1.1(b) shall be submitted to the address listed in Section C - General Reporting Requirements, of this permit, using the reporting forms located at the end of this permit, or their equivalent, within thirty (30) days after the end of the quarter being reported. The report submitted by the Permittee does require the certification by the "responsible official" as defined by 326 IAC 2-7-1(34).

SECTION D.2 EMISSIONS UNIT OPERATION CONDITIONS

Facility Description [326 IAC 2-7-5(15)]: Insignificant Activities

(d) Degreasing operations that do not exceed 145 gallons per twelve (12) months and not subject to 326 IAC 20-6 [326 IAC 8-3-2][326 IAC 8-3-8].

(h) Non-contact cooling tower systems with either natural draft or forced and induced draft systems not regulated under a NESHAP including one (1) cooling tower (identified as RT601), constructed in 1982, with a maximum capacity of 15,000 gallons of water per minute.

(l) Other emission units, not regulated by a NESHAP, with PM10, NOx, and SO_2 emissions less than five (5) pounds per hour or twenty-five (25) pounds per day, CO emissions less than twenty-five (25) pounds per day, VOC emissions less than three (3) pounds per hour or fifteen (15) pounds per day, lead emissions less than six-tenths (0.6) tons per year or three and twenty-nine hundredths (3.29) pounds per day, and emitting greater than one (1) pound per day but less than five (5) pounds per day or one (1) ton per year of a single HAP, or emitting greater than one (1) pound per day but less than twelve and five tenths (12.5) pounds per day or two and five tenths (2.5) ton per year of any combination of HAPs:

(1) One (1) internal floating roof, above-ground storage tank (identified as RF-144) used to store light polymer, with a maximum storage capacity of 81,000 gallons. This storage tank was originally installed in 1982 and modified in 1996. [40 CFR 60, Subpart Kb] [326 IAC 12]

Under 40 CFR 60, Subpart Kb, storage tank RF-144 is considered to be new volatile organic liquid storage tank.

(2) Twenty-three (23) fixed roof dome, above-ground storage tanks, each installed in 1982, including the following:

(A) Two (2) storage tanks (identified as RF-101 and RF-102) used to store polybutene product, each with a maximum storage capacity of 163,002 gallons and using a nitrogen blanket to prevent water entrainment. [326 IAC 8-9]

(B) One (1) storage tank (identified as RF-104) used to store polybutene product, with a maximum storage capacity of 127,092 gallons and using a nitrogen blanket to prevent water entrainment. [326 IAC 8-9]

(C) Two (2) storage tanks (identified as RF-105 and RF-106) used to store polybutene product, each with a maximum storage capacity of 88,116 gallons respectively and using a nitrogen blanket to prevent water entrainment. [326 IAC 8-9]

(D) Ten (10) storage tanks (identified as RF-107, RF-108, RF-109, RF-110, RF-112, RF-113, RF-114, RF-117, RF-118, and RF-119) used to store polybutene product, each with a maximum storage capacity of 300,804 gallons and using a nitrogen blanket to prevent water entrainment. [326 IAC 8-9]

(E) One (1) storage tank (identified as RF-131) used to store polybutene product and hydrocarbons, with a maximum storage capacity of 23,940 gallons and using a nitrogen blanket to prevent water entrainment. [326 IAC 8-9]

(F) One (1) storage tank (identified as RF-132) used to store polybutene product and hydrocarbons, with a maximum storage capacity of 90,678 gallons and using a nitrogen blanket to prevent water entrainment. [326 IAC 8-9]

(G) One (1) storage tank (identified as RF-133) used to store polybutene product,

with a maximum storage capacity of 23,940 gallons and using a nitrogen blanket to prevent water entrainment. [326 IAC 8-9]

(H) One (1) storage tank (identified as RF-134) used to store polybutene product, with a maximum storage capacity of 90,678 gallons and using a nitrogen blanket to prevent water entrainment. [326 IAC 8-9]

(I) Two (2) storage tanks (identified as RF-141 and RF-142) used to store polybutene product, each with a maximum storage capacity of 127,092 gallons and using a nitrogen blanket to prevent water entrainment. [326 IAC 8-9]

(J) One (1) storage tank (identified as RF-143) used to store polybutene, with a maximum storage capacity of 127,092 gallons and using a nitrogen blanket to prevent water entrainment. [326 IAC 8-9]

(K) One (1) storage tank (identified as RF-145) used to store slop, with a maximum storage capacity of 88,000 gallons and using a nitrogen blanket to prevent water entrainment. [326 IAC 8-9]

(The information describing the process contained in this emissions unit description box is descriptive information and does not constitute enforceable conditions.)

Emission Limitations and Standards [326 IAC 2-7-5(1)]

D.2.1 Volatile Organic Compounds (VOC) [326 IAC 8-3-2]

Pursuant to 326 IAC 8-3-2 (Cold Cleaner Operations), for cold cleaning operations constructed after January 1, 1980, the Permittee shall:

(a) Equip the cleaner with a cover;

(b) Equip the cleaner with a facility for draining cleaned parts;

(c) Close the degreaser cover whenever parts are not being handled in the cleaner;

(d) Drain cleaned parts for at least fifteen (15) seconds or until dripping ceases;

(e) Provide a permanent, conspicuous label summarizing the operation requirements;

(f) Store waste solvent only in covered containers and not dispose of waste solvent or transfer it to another party, in such a manner that greater than twenty percent (20%) of the waste solvent (by weight) can evaporate into the atmosphere.

D.2.2 Volatile Organic Compounds (VOC) [326 IAC 8-3-8]

Pursuant to 326 IAC 8-3-8 (Material requirements for cold cleaning degreasers), the Permittee shall not operate a cold cleaning degreaser with a solvent vapor pressure that exceeds one (1) millimeter of mercury (nineteen-thousandths (0.019) pound per square inch) measured at twenty (20) degrees Celsius (sixty-eight (68) degrees Fahrenheit).

D.2.3 Volatile Organic Compounds (VOC) [326 IAC 8-9]

(a) Pursuant to 326 IAC 8-9-6 (Volatile Organic Liquid Storage Vessels), the Permittee shall maintain the following information for storage tanks RF-101, RF-102, RF-104 through RF-110, RF-112 though RF-114, RF-117 through RF-119, RF-131 through RF-134, RF-141 through RF-143, and RF-145:

(1) The vessel identification number.

(2) The vessel dimensions.

(3) The vessel capacity.

The Permittee shall keep all records as described for the life of each vessel.

(b) Pursuant to 326 IAC 8-9-6(h), the Permittee shall maintain a record and notify IDEM, OAQ within thirty (30) days when the maximum true vapor pressure of the liquid stored in vessels RF-101, RF-102, RF-104 through RF-110, RF-112 though RF-114, RF-117 through RF-119, RF-132, RF-134, RF-141 through RF-143, and RF-145 exceeds 0.75 psia.

Record Keeping and Reporting Requirement [326 IAC 2-7-5(3)] [326 IAC 2-7-19]

D.2.4 Record Keeping Requirements

In order to document compliance with Condition D.2.2, the Permittee shall maintain each of the following records for each purchase:

(a) The name and address of the solvent supplier;

(b) The date of purchase;

(c) The type of solvent;

(d) The volume of each unit of solvent;

(e) The total volume of the solvent;

(f) The true vapor pressure of the solvent measured in millimeters of mercury at twenty (20) degrees Celsius (sixty-eight (68) degrees Fahrenheit).

All records shall be retained on-site for the most recent three (3) year period and shall be reasonably accessible for an additional two (2) year period.

SECTION E.1 FACILITY OPERATION CONDITIONS

Facility Description [326 IAC 2-7-5(15)]

(a) One (1) chemical plant used to manufacture polybutene from a butane/butene mixture by a catalytic polymerization reaction. The maximum production capacity of the chemical plant is 250 million pounds of polybutene per year. The chemical plant consists of the following emission units:

(1) One (1) unloading rack, identified as EU-2 and constructed in 1982, used for unloading raw materials from trucks and rail cars;

(2) One (1) product shipping rack, identified as EU-3 and constructed in 1982, with a maximum capacity of 325 gallons per minute, used for loading trucks and railcars with finished product;

(3) One (1) process heater, identified as EU-4 and constructed in 1982, with a maximum heat input capacity of 10 MMBtu per hour and fired using process gas or natural gas;

(4) One (1) vapor recovery unit (VRU), identified as EU-5 and constructed in 1982, used to condense C_3-C_4 hydrocarbons from unreacted butane and butene. The condensible hydrocarbons are transferred via pipeline to the refinery or via pipeline to the rail loading/unloading rack system, while the non-condensible hydrocarbons are transferred to the process heater EU-4 for use as fuel. The condensable and non-condensable hydrocarbons are routed to the PIB Flare during process upsets;

(5) One (1) rail loading/unloading rack system, identified as EU-7, constructed in 2006, including piping for butane/butene (BB) feed stock and spent BB, with a maximum capacity of 300 gallons per minute per car or a total of 2,084 cars per year, and consisting of six (6) rail loading/unloading locations on two (2) new rail sidings; and

(6) One (1) hydrotreater, identified as EU-8, constructed in 1991, with a maximum production capacity of 250 million pounds of polybutene per year.

VOC emissions from EU-2, EU-3, EU-5, EU-7, and EU-8 are controlled by the existing flare, identified as the PIB Flare. The PIB Flare has a maximum capacity of 540,000 pounds per hour of natural gas and process gas, and exhausts through stack SV-2. Emissions from the BP Whiting refinery's propylene loading and storage activities are also sent to the PIB Flare and combusted for VOC control. During VRU upsets, the condensible and non-condensible hydrocarbons from EU-5 are vented to the flare. Under NSPS, Subpart VV, the pumps, compressors, pressure relief devices in gas/vapor service, sampling connection systems, open-ended valves or lines, and valves of this process are considered to be affected facilities. Under NESHAP, Subpart FF, the benzene-containing hazardous waste stream(s) generated by the production of chemicals by chemical, thermal, physical, or biological processes for use as a product, co-product, by-product, or intermediate and is either treated, stored, or disposed of is considered to be an affected source.

(The information describing the process contained in this facility description box is descriptive information and does not constitute enforceable conditions.)

E.1.1 General Provisions Relating to New Source Performance Standards [326 IAC 12-1] [40 CFR Part 60, Subpart A]

(a) The provisions of 40 CFR 60, Subpart A - General Provisions, which are incorporated by reference in 326 IAC 12-1, apply to the facilities described in this Section E.1 except when otherwise specified in 40 CFR 60, Subpart VV.

(b) Pursuant to 40 CFR 60.19, the Permittee shall submit all required notifications and reports to:

Indiana Department of Environmental Management
Compliance Branch, Office of Air Quality
100 North Senate Avenue
MC 61-53 IGCN 1003
Indianapolis, Indiana 46204-2251

E.1.2 Standards of Performance for Equipment Leaks of VOC in the Synthetic Organic Chemicals Manufacturing Industry [40 CFR Part 60, Subpart VV] [326 IAC 12]

The Permittee shall comply with the following provisions of 40 CFR Part 60, Subpart VV (included as Attachment B of the permit), which are incorporated by reference as 326 IAC 12:

(1) 40 CFR 60.480(a)
(2) 40 CFR 60.480(b)
(3) 40 CFR 60.480(c)
(4) 40 CFR 60.481
(5) 40 CFR 60.482-1
(6) 40 CFR 60.482-2
(7) 40 CFR 60.482-3
(8) 40 CFR 60.482-4
(9) 40 CFR 60.482-5
(10) 40 CFR 60.482-6
(11) 40 CFR 60.482-7
(12) 40 CFR 60.482-8
(13) 40 CFR 60.482-9
(14) 40 CFR 60.482-10
(15) 40 CFR 60.483-1
(16) 40 CFR 60.483-2
(17) 40 CFR 60.485
(18) 40 CFR 60.486
(19) 40 CFR 60.487

SECTION E.2 FACILITY OPERATION CONDITIONS

Facility Description [326 IAC 2-7-5(15)]

(a) One (1) chemical plant used to manufacture polybutene from a butane/butene mixture by a catalytic polymerization reaction. The maximum production capacity of the chemical plant is 250 million pounds of polybutene per year. The chemical plant consists of the following emission units:

(1) One (1) unloading rack, identified as EU-2 and constructed in 1982, used for unloading raw materials from trucks and rail cars;

(2) One (1) product shipping rack, identified as EU-3 and constructed in 1982, with a maximum capacity of 325 gallons per minute, used for loading trucks and railcars with finished product;

(3) One (1) process heater, identified as EU-4 and constructed in 1982, with a maximum heat input capacity of 10 MMBtu per hour and fired using process gas or natural gas;

(4) One (1) vapor recovery unit (VRU), identified as EU-5 and constructed in 1982, used to condense C_3-C_4 hydrocarbons from unreacted butane and butene. The condensible hydrocarbons are transferred via pipeline to the refinery or via pipeline to the rail loading/unloading rack system, while the non-condensible hydrocarbons are transferred to the process heater EU-4 for use as fuel. The condensable and non-condensable hydrocarbons are routed to the PIB Flare during process upsets;

(5) One (1) rail loading/unloading rack system, identified as EU-7, constructed in 2006, including piping for butane/butene (BB) feed stock and spent BB, with a maximum capacity of 300 gallons per minute per car or a total of 2,084 cars per year, and consisting of six (6) rail loading/unloading locations on two (2) new rail sidings; and

(6) One (1) hydrotreater, identified as EU-8, constructed in 1991, with a maximum production capacity of 250 million pounds of polybutene per year.

VOC emissions from EU-2, EU-3, EU-5, EU-7, and EU-8 are controlled by the existing flare, identified as the PIB Flare. The PIB Flare has a maximum capacity of 540,000 pounds per hour of natural gas and process gas, and exhausts through stack SV-2. Emissions from the BP Whiting refinery's propylene loading and storage activities are also sent to the PIB Flare and combusted for VOC control. During VRU upsets, the condensible and non-condensible hydrocarbons from EU-5 are vented to the flare. Under NSPS, Subpart VV, the pumps, compressors, pressure relief devices in gas/vapor service, sampling connection systems, open-ended valves or lines, and valves of this process are considered to be affected facilities. Under NESHAP, Subpart FF, the benzene-containing hazardous waste stream(s) generated by the production of chemicals by chemical, thermal, physical, or biological processes for use as a product, co-product, by-product, or intermediate and is either treated, stored, or disposed of is considered to be an affected source.

(The information describing the process contained in this facility description box is descriptive information and does not constitute enforceable conditions.)

E.2.1 General Provisions Relating to National Emissions Standards for Hazardous Air Pollutants under 40 CFR Part 61 [326 IAC 14-1] [40 CFR Part 61, Subpart A]

(a) The provisions of 40 CFR Part 61, Subpart A – General Provisions, which are incorporated by reference as 326 IAC 14-1, apply to the facilities described in this Section E.2 except when otherwise specified in 40 CFR Part 61, Subpart FF.

(b) Pursuant to 40 CFR 61.10, the Permittee shall submit all required notifications and reports to:

Indiana Department of Environmental Management
Compliance Branch, Office of Air Quality
100 North Senate Avenue
MC 61-53 IGCN 1003
Indianapolis, Indiana 46204-2251

E.2.2 National Emissions Standards for Hazardous Air Pollutants for Benzene Waste Operations: Requirements [40 CFR Part 61, Subpart FF] [326 IAC 14]

The Permittee shall comply with the following provisions of 40 CFR Part 61, Subpart FF (included as Attachment C of the permit), which are incorporated by reference as 326 IAC 14:

(1) 40 CFR 61.340(a)
(2) 40 CFR 61.340(c)
(3) 40 CFR 61.340(d)
(4) 40 CFR 61.341
(5) 40 CFR 61.342(a)
(6) 40 CFR 61.342(g)
(7) 40 CFR 61.350
(8) 40 CFR 61.355(a)(1) and (2)
(9) 40 CFR 61.355(a)(5) and (6)
(10) 40 CFR 61.355(b)(1)
(11) 40 CFR 61.355(b)(4)
(12) 40 CFR 61.355(b)(5)
(13) 40 CFR 61.355(b)(6)
(14) 40 CFR 61.355(b)(7)
(15) 40 CFR 61.355(c)(1)(i)(A)
(16) 40 CFR 61.355(c)(1)(i)(D)
(17) 40 CFR 61.355(c)(2)
(18) 40 CFR 61.355(c)(3)
(19) 40 CFR 61.356(a)
(20) 40 CFR 61.356(b)(1)
(21) 40 CFR 61.356(b)(5)
(22) 40 CFR 61.357(a)
(23) 40 CFR 61.357(b)
(24) 40 CFR 61.358

SECTION E.3 FACILITY OPERATION CONDITIONS

Facility Description [326 IAC 2-7-5(15)]

(l) Other emission units, not regulated by a NESHAP, with PM10, NOx, and SO_2 emissions less than five (5) pounds per hour or twenty-five (25) pounds per day, CO emissions less than twenty-five (25) pounds per day, VOC emissions less than three (3) pounds per hour or fifteen (15) pounds per day, lead emissions less than six-tenths (0.6) tons per year or three and twenty-nine hundredths (3.29) pounds per day, and emitting greater than one (1) pound per day but less than five (5) pounds per day or one (1) ton per year of a single HAP, or emitting greater than one (1) pound per day but less than twelve and five tenths (12.5) pounds per day or two and five tenths (2.5) ton per year of any combination of HAPs:

(1) One (1) internal floating roof, above-ground storage tank (identified as RF-144) used to store light polymer, with a maximum storage capacity of 81,000 gallons. This storage tank was originally installed in 1982 and modified in 1996. [40 CFR 60, Subpart Kb] [326 IAC 12]

Under 40 CFR 60, Subpart Kb, storage tank RF-144 is considered to be new volatile organic liquid storage tank.

(The information describing the process contained in this facility description box is descriptive information and does not constitute enforceable conditions.)

E.3.1 General Provisions Relating to New Source Performance Standards [326 IAC 12-1] [40 CFR Part 60, Subpart A]

(a) Pursuant to 40 CFR 60.1, the Permittee shall comply with the provisions of 40 CFR Part 60 Subpart A – General Provisions, which are incorporated by reference as 326 IAC 12-1 for Tank RF-144 except as otherwise specified in 40 CFR Part 60, Subpart Kb.

(b) Pursuant to 40 CFR 60.19, the Permittee shall submit all required notifications and reports to:

Indiana Department of Environmental Management
Compliance Branch, Office of Air Quality
100 North Senate Avenue
MC 61-53 IGCN 1003
Indianapolis, Indiana 46204-2251

E.3.2 Standards of Performance for Volatile Organic Liquid Storage Vessels (Including Petroleum Liquid Storage Vessels) [40 CFR Part 60, Subpart Kb] [326 IAC 12]

The Permittee shall comply with the following provisions of 40 CFR Part 60, Subpart Kb (included as Attachment D of the permit), which are incorporated by reference as 326 IAC 12, for Tank RF-144:

(1) 40 CFR 60.110b(a) and (b)
(2) 40 CFR 60.111b
(3) 40 CFR 60.112b(a)(1)
(4) 40 CFR 60.113b(a)
(5) 40 CFR 60.115b(a)
(6) 40 CFR 60.116b(a – e)
(7) 40 CFR 60.117b

INDIANA DEPARTMENT OF ENVIRONMENTAL MANAGEMENT
OFFICE OF AIR QUALITY
PART 70 OPERATING PERMIT
CERTIFICATION

Source Name: INEOS USA LLC
Source Address: 2357 Standard Avenue, Whiting, Indiana 46394
Mailing Address: 2357 Standard Avenue, Whiting, Indiana 46394
Part 70 Permit No.: T089-25489-00076

This certification shall be included when submitting monitoring, testing reports/results or other documents as required by this permit.

Please check what document is being certified:

☐ Annual Compliance Certification Letter

☐ Test Result (specify)

☐ Report (specify)

☐ Notification (specify)

☐ Affidavit (specify)

☐ Other (specify)

I certify that, based on information and belief formed after reasonable inquiry, the statements and information in the document are true, accurate, and complete.
Signature:
Printed Name:
Title/Position:
Phone:
Date:

INDIANA DEPARTMENT OF ENVIRONMENTAL MANAGEMENT
OFFICE OF AIR QUALITY

COMPLIANCE BRANCH
100 North Senate Avenue
MC 61-53 IGCN 1003
Indianapolis, Indiana 46204-2251
Phone: 317-233-0178
Fax: 317-233-6865

PART 70 OPERATING PERMIT
EMERGENCY OCCURRENCE REPORT

Source Name: INEOS USA LLC
Source Address: 2357 Standard Avenue, Whiting, Indiana 46394
Mailing Address: 2357 Standard Avenue, Whiting, Indiana 46394
Part 70 Permit No.: T089-25489-00076

This form consists of 2 pages **Page 1 of 2**

☐ This is an emergency as defined in 326 IAC 2-7-1(12)

- The Permittee must notify the Office of Air Quality (OAQ), within four (**4**) business hours (1-800-451-6027 or 317-233-0178, ask for Compliance Section); and
- The Permittee must submit notice in writing or by facsimile within two (**2**) working days (Facsimile Number: 317-233-6865), and follow the other requirements of 326 IAC 2-7-16.

If any of the following are not applicable, mark N/A

Facility/Equipment/Operation:
Control Equipment:
Permit Condition or Operation Limitation in Permit:
Description of the Emergency:
Describe the cause of the Emergency:

If any of the following are not applicable, mark N/A **Page 2 of 2**

Date/Time Emergency started:
Date/Time Emergency was corrected:
Was the facility being properly operated at the time of the emergency? Y N
Type of Pollutants Emitted: TSP, PM-10, SO_2, VOC, NO_X, CO, Pb, other:
Estimated amount of pollutant(s) emitted during emergency:
Describe the steps taken to mitigate the problem:
Describe the corrective actions/response steps taken:
Describe the measures taken to minimize emissions:
If applicable, describe the reasons why continued operation of the facilities are necessary to prevent imminent injury to persons, severe damage to equipment, substantial loss of capital investment, or loss of product or raw materials of substantial economic value:

Form Completed by:_____

Title / Position: _____

Date:_____

Phone: _____

A certification is not required for this report.

INDIANA DEPARTMENT OF ENVIRONMENTAL MANAGEMENT
OFFICE OF AIR QUALITY
COMPLIANCE DATA SECTION

Part 70 Quarterly Report

Source Name: INEOS USA LLC
Source Address: 2357 Standard Avenue, Whiting, Indiana 46394
Mailing Address: 2357 Standard Avenue, Whiting, Indiana 46394
Part 70 Permit No.: T089-25489-00076
Facility: PIB Flare
Parameter: VOC Input
Limit: 7,000 tons per twelve (12) consecutive month period with compliance determined at the end of each month.

QUARTER : YEAR:

Month	Column 1	Column 2	Column 1 + Column 2
	This Month	Previous 11 Months	12 Month Total
Month 1			
Month 2			
Month 3			

☐ No deviation occurred in this quarter.

☐ Deviation/s occurred in this quarter.
Deviation has been reported on:

Submitted by: _____
Title / Position: _____
Signature: _____
Date: _____
Phone: _____

Attach a signed certification to complete this report.

INDIANA DEPARTMENT OF ENVIRONMENTAL MANAGEMENT
OFFICE OF AIR QUALITY
COMPLIANCE DATA SECTION

Part 70 Quarterly Report

Source Name: INEOS USA LLC
Source Address: 2357 Standard Avenue, Whiting, Indiana 46394
Mailing Address: 2357 Standard Avenue, Whiting, Indiana 46394
Part 70 Permit No.: T089-25489-00076
Facility: PIB Flare
Parameter: 1,3-Butadiene Input
Limit: 900 tons per twelve (12) consecutive month period with compliance determined at the end of each month.

QUARTER : YEAR:

Month	Column 1	Column 2	Column 1 + Column 2
	This Month	Previous 11 Months	12 Month Total
Month 1			
Month 2			
Month 3			

☐ No deviation occurred in this quarter.

☐ Deviation/s occurred in this quarter.
Deviation has been reported on:

Submitted by: _____
Title / Position: _____
Signature: _____
Date: _____
Phone: _____

Attach a signed certification to complete this report.

INDIANA DEPARTMENT OF ENVIRONMENTAL MANAGEMENT
OFFICE OF AIR QUALITY
COMPLIANCE DATA SECTION
PART 70 OPERATING PERMIT
QUARTERLY DEVIATION AND COMPLIANCE MONITORING REPORT

Source Name: INEOS USA LLC
Source Address: 2357 Standard Avenue, Whiting, Indiana 46394
Mailing Address: 2357 Standard Avenue, Whiting, Indiana 46394
Part 70 Permit No.: T089-25489-00076

Months: _____ to _ Year: _____

This report shall be submitted quarterly based on a calendar year. Any deviation from the requirements, the date(s) of each deviation, the probable cause of the deviation, and the response steps taken must be reported. A deviation required to be reported pursuant to an applicable requirement that exists independent of the permit, shall be reported according to the schedule stated in the applicable requirement and does not need to be included in this report. Additional pages may be attached if necessary. If no deviations occurred, please specify in the box marked "No deviations occurred this reporting period".	
☐ NO DEVIATIONS OCCURRED THIS REPORTING PERIOD.	
☐ THE FOLLOWING DEVIATIONS OCCURRED THIS REPORTING PERIOD	
Permit Requirement (specify permit condition #)	
Date of Deviation:	**Duration of Deviation:**
Number of Deviations:	
Probable Cause of Deviation:	
Response Steps Taken:	
Permit Requirement (specify permit condition #)	
Date of Deviation:	**Duration of Deviation:**
Number of Deviations:	
Probable Cause of Deviation:	
Response Steps Taken:	

Permit Requirement (specify permit condition #)	
Date of Deviation:	**Duration of Deviation:**
Number of Deviations:	
Probable Cause of Deviation:	
Response Steps Taken:	
Permit Requirement (specify permit condition #)	
Date of Deviation:	**Duration of Deviation:**
Number of Deviations:	
Probable Cause of Deviation:	
Response Steps Taken:	
Permit Requirement (specify permit condition #)	
Date of Deviation:	**Duration of Deviation:**
Number of Deviations:	
Probable Cause of Deviation:	
Response Steps Taken:	

Form Completed by:_____

Title / Position: _____

Date:_____

Phone: _____

Attach a signed certification to complete this report.

ATTACHMENT A

PART 60—STANDARDS OF PERFORMANCE FOR NEW STATIONARY SOURCES
Subpart A—General Provisions For Flares (40 CFR 60.18(b))

PART 70 OPERATING PERMIT
OFFICE OF AIR QUALITY

INEOS USA LLC
2357 Standard Avenue
Whiting, Indiana 46394
089-25489-00046

Attachment A

PART 60—STANDARDS OF PERFORMANCE FOR NEW STATIONARY SOURCES
Subpart A—General Provisions

§ 60.18 General control device requirements.

(a) *Introduction.* This section contains requirements for control devices used to comply with applicable subparts of parts 60 and 61. The requirements are placed here for administrative convenience and only apply to facilities covered by subparts referring to this section.

(b) *Flares.* Paragraphs (c) through (f) apply to flares.

(c)(1) Flares shall be designed for and operated with no visible emissions as determined by the methods specified in paragraph (f), except for periods not to exceed a total of 5 minutes during any 2 consecutive hours.

(2) Flares shall be operated with a flame present at all times, as determined by the methods specified in paragraph (f).

(3) An owner/operator has the choice of adhering to either the heat content specifications in paragraph (c)(3)(ii) of this section and the maximum tip velocity specifications in paragraph (c)(4) of this section, or adhering to the requirements in paragraph (c)(3)(i) of this section.

(i)(A) Flares shall be used that have a diameter of 3 inches or greater, are nonassisted, have a hydrogen content of 8.0 percent (by volume), or greater, and are designed for and operated with an exit velocity less than 37.2 m/sec (122 ft/sec) and less than the velocity, V_{max}, as determined by the following equation:

$V_{max}=(X_{H2}-K_1)* K_2$

Where:

V_{max}=Maximum permitted velocity, m/sec.

K_1=Constant, 6.0 volume-percent hydrogen.

K_2=Constant, 3.9(m/sec)/volume-percent hydrogen.

X_{H2}=The volume-percent of hydrogen, on a wet basis, as calculated by using the American Society for Testing and Materials (ASTM) Method D1946–77. (Incorporated by reference as specified in §60.17).

(B) The actual exit velocity of a flare shall be determined by the method specified in paragraph (f)(4) of this section.

(ii) Flares shall be used only with the net heating value of the gas being combusted being 11.2 MJ/scm (300 Btu/scf) or greater if the flare is steam-assisted or air-assisted; or with the net heating value of the gas being combusted being 7.45 MJ/scm (200 Btu/scf) or greater if the flare is nonassisted. The net heating value of the gas being combusted shall be determined by the methods specified in paragraph (f)(3) of this section.

(4)(i) Steam-assisted and nonassisted flares shall be designed for and operated with an exit velocity, as determined by the methods specified in paragraph (f)(4) of this section, less than 18.3 m/sec (60 ft/sec), except as provided in paragraphs (c)(4) (ii) and (iii) of this section.

(ii) Steam-assisted and nonassisted flares designed for and operated with an exit velocity, as determined by the methods specified in paragraph (f)(4), equal to or greater than 18.3 m/sec (60

ft/sec) but less than 122 m/sec (400 ft/sec) are allowed if the net heating value of the gas being combusted is greater than 37.3 MJ/scm (1,000 Btu/scf).

(iii) Steam-assisted and nonassisted flares designed for and operated with an exit velocity, as determined by the methods specified in paragraph (f)(4), less than the velocity, V_{max}, as determined by the method specified in paragraph (f)(5), and less than 122 m/sec (400 ft/sec) are allowed.

(5) Air-assisted flares shall be designed and operated with an exit velocity less than the velocity, V_{max}, as determined by the method specified in paragraph (f)(6).

(6) Flares used to comply with this section shall be steam-assisted, air-assisted, or nonassisted.

(d) Owners or operators of flares used to comply with the provisions of this subpart shall monitor these control devices to ensure that they are operated and maintained in conformance with their designs. Applicable subparts will provide provisions stating how owners or operators of flares shall monitor these control devices.

(e) Flares used to comply with provisions of this subpart shall be operated at all times when emissions may be vented to them.

(f)(1) Method 22 of appendix A to this part shall be used to determine the compliance of flares with the visible emission provisions of this subpart. The observation period is 2 hours and shall be used according to Method 22.

(2) The presence of a flare pilot flame shall be monitored using a thermocouple or any other equivalent device to detect the presence of a flame.

(3) The net heating value of the gas being combusted in a flare shall be calculated using the following equation:

$$H_T = K \sum_{i=1}^{n} C_i H_i$$

where:

H_T=Net heating value of the sample, MJ/scm; where the net enthalpy per mole of offgas is based on combustion at 25 °C and 760 mm Hg, but the standard temperature for determining the volume corresponding to one mole is 20 °C;

$$K = \text{Constant, } 1.740 \times 10^{-7} \left(\frac{1}{ppm}\right) \left(\frac{g\ mole}{scm}\right) \left(\frac{MJ}{kcal}\right)$$

where the standard temperature for $\left(\frac{g\ mole}{scm}\right)$ is 20°C;

C_i=Concentration of sample component i in ppm on a wet basis, as measured for organics by Reference Method 18 and measured for hydrogen and carbon monoxide by ASTM D1946–77 or 90 (Reapproved 1994) (Incorporated by reference as specified in §60.17); and

H_i=Net heat of combustion of sample component i, kcal/g mole at 25 °C and 760 mm Hg. The heats of combustion may be determined using ASTM D2382–76 or 88 or D4809–95 (incorporated by reference as specified in §60.17) if published values are not available or cannot be calculated.

(4) The actual exit velocity of a flare shall be determined by dividing the volumetric flowrate (in units of standard temperature and pressure), as determined by Reference Methods 2, 2A, 2C, or 2D as appropriate; by the unobstructed (free) cross sectional area of the flare tip.

(5) The maximum permitted velocity, V_{max}, for flares complying with paragraph (c)(4)(iii) shall be

determined by the following equation.

$Log_{10}(V_{max})=(H_T+28.8)/31.7$

V_{max}=Maximum permitted velocity, M/sec

28.8=Constant

31.7=Constant

H_T=The net heating value as determined in paragraph (f)(3).

(6) The maximum permitted velocity, V_{max}, for air-assisted flares shall be determined by the following equation.

$V_{max}=8.706+0.7084\ (H_T)$

V_{max}=Maximum permitted velocity, m/sec

8.706=Constant

0.7084=Constant

H_T=The net heating value as determined in paragraph (f)(3).

[51 FR 2701, Jan. 21, 1986, as amended at 63 FR 24444, May 4, 1998; 65 FR 61752, Oct. 17, 2000]

ATTACHMENT B

Subpart VV—Standards of Performance for Equipment Leaks of VOC in the Synthetic Organic Chemicals Manufacturing Industry for which Construction, Reconstruction, or Modification Commenced After January 5, 1981, and on or Before November 7, 2006

PART 70 OPERATING PERMIT
OFFICE OF AIR QUALITY

INEOS USA LLC
2357 Standard Avenue
Whiting, Indiana 46394
089-25489-00046

Attachment B

Subpart VV—Standards of Performance for Equipment Leaks of VOC in the Synthetic Organic Chemicals Manufacturing Industry for which Construction, Reconstruction, or Modification Commenced After January 5, 1981, and on or Before November 7, 2006

Source: 48 FR 48335, Oct. 18, 1983, unless otherwise noted.

§ 60.480 Applicability and designation of affected facility.

(a)(1) The provisions of this subpart apply to affected facilities in the synthetic organic chemicals manufacturing industry.

(2) The group of all equipment (defined in §60.481) within a process unit is an affected facility.

(b) Any affected facility under paragraph (a) of this section that commences construction, reconstruction, or modification after January 5, 1981, and on or before November 7, 2006, shall be subject to the requirements of this subpart.

(c) Addition or replacement of equipment for the purpose of process improvement which is accomplished without a capital expenditure shall not by itself be considered a modification under this subpart.

(d)(1) If an owner or operator applies for one or more of the exemptions in this paragraph, then the owner or operator shall maintain records as required in §60.486(i).

(2) Any affected facility that has the design capacity to produce less than 1,000 Mg/yr (1,102 ton/yr) of a chemical listed in §60.489 is exempt from §§60.482–1 through 60.482–10.

(3) If an affected facility produces heavy liquid chemicals only from heavy liquid feed or raw materials, then it is exempt from §§60.482–1 through 60.482–10.

(4) Any affected facility that produces beverage alcohol is exempt from §§60.482–1 through 60.482–10.

(5) Any affected facility that has no equipment in volatile organic compounds (VOC) service is exempt from §§60.482–1 through 60.482–10.

(e) *Alternative means of compliance* — (1) *Option to comply with part 65.* (i) Owners or operators may choose to comply with the provisions of 40 CFR part 65, subpart F, to satisfy the requirements of §§60.482 through 60.487 for an affected facility. When choosing to comply with 40 CFR part 65, subpart F, the requirements of §60.485(d), (e), and (f) and §60.486(i) and (j) still apply. Other provisions applying to an owner or operator who chooses to comply with 40 CFR part 65 are provided in 40 CFR 65.1.

(ii) *Part 60, subpart A* . Owners or operators who choose to comply with 40 CFR part 65, subpart F must also comply with §§60.1, 60.2, 60.5, 60.6, 60.7(a)(1) and (4), 60.14, 60.15, and 60.16 for that equipment. All sections and paragraphs of subpart A of this part that are not mentioned in this paragraph (e)(1)(ii) do not apply to owners and operators of equipment subject to this subpart complying with 40 CFR part 65, subpart F, except that provisions required to be met prior to implementing 40 CFR part 65 still apply. Owners and operators who choose to comply with 40 CFR part 65, subpart F, must comply with 40 CFR part 65, subpart A.

(2) *Subpart VVa* . Owners or operators may choose to comply with the provisions of subpart VVa of this part 60 to satisfy the requirements of this subpart VV for an affected facility.

[48 FR 48335, Oct. 18, 1983, as amended at 49 FR 22607, May 30, 1984; 65 FR 61762, Oct. 17, 2000; 65 FR 78276, Dec. 14, 2000; 72 FR 64879, Nov. 16, 2007]

§ 60.481 Definitions.

As used in this subpart, all terms not defined herein shall have the meaning given them in the Act or in subpart A of part 60, and the following terms shall have the specific meanings given them.

Capital expenditure means, in addition to the definition in 40 CFR 60.2, an expenditure for a physical or operational change to an existing facility that:

(a) Exceeds P, the product of the facility's replacement cost, R, and an adjusted annual asset guideline repair allowance, A, as reflected by the following equation: P = R × A, where

(1) The adjusted annual asset guideline repair allowance, A, is the product of the percent of the replacement cost, Y, and the applicable basic annual asset guideline repair allowance, B, divided by 100 as reflected by the following equation:

A = Y × (B ÷ 100);

(2) The percent Y is determined from the following equation: Y = 1.0 − 0.575 log X, where X is 1982 minus the year of construction; and

(3) The applicable basic annual asset guideline repair allowance, B, is selected from the following table consistent with the applicable subpart:

Table for Determining Applicable Value for B

Subpart applicable to facility	Value of B to be used in equation
VV	12.5
DDD	12.5
GGG	7.0
KKK	4.5

Closed-loop system means an enclosed system that returns process fluid to the process.

Closed-purge system means a system or combination of systems and portable containers to capture purged liquids. Containers for purged liquids must be covered or closed when not being filled or emptied.

Closed vent system means a system that is not open to the atmosphere and that is composed of hard-piping, ductwork, connections, and, if necessary, flow-inducing devices that transport gas or vapor from a piece or pieces of equipment to a control device or back to a process.

Connector means flanged, screwed, or other joined fittings used to connect two pipe lines or a pipe line and a piece of process equipment or that close an opening in a pipe that could be connected to another pipe. Joined fittings welded completely around the circumference of the interface are not considered connectors for the purpose of this subpart.

Control device means an enclosed combustion device, vapor recovery system, or flare.

Distance piece means an open or enclosed casing through which the piston rod travels, separating the compressor cylinder from the crankcase.

Double block and bleed system means two block valves connected in series with a bleed valve or line that can vent the line between the two block valves.

Duct work means a conveyance system such as those commonly used for heating and ventilation systems. It is often made of sheet metal and often has sections connected by screws or crimping. Hard-piping is not ductwork.

Equipment means each pump, compressor, pressure relief device, sampling connection system, open-ended valve or line, valve, and flange or other connector in VOC service and any devices or systems required by this subpart.

First attempt at repair means to take action for the purpose of stopping or reducing leakage of organic material to the atmosphere using best practices.

Fuel gas means gases that are combusted to derive useful work or heat.

Fuel gas system means the offsite and onsite piping and flow and pressure control system that gathers gaseous stream(s) generated by onsite operations, may blend them with other sources of gas, and transports the gaseous stream for use as fuel gas in combustion devices or in-process combustion equipment, such as furnaces and gas turbines, either singly or in combination.

Hard-piping means pipe or tubing that is manufactured and properly installed using good engineering judgment and standards such as ASME B31.3, Process Piping (available from the American Society of Mechanical Engineers, PO Box 2300, Fairfield, NJ 07007–2300).

In gas/vapor service means that the piece of equipment contains process fluid that is in the gaseous state at operating conditions.

In heavy liquid service means that the piece of equipment is not in gas/vapor service or in light liquid service.

In light liquid service means that the piece of equipment contains a liquid that meets the conditions specified in §60.485(e).

In-situ sampling systems means nonextractive samplers or in-line samplers.

In vacuum service means that equipment is operating at an internal pressure which is at least 5 kilopascals (kPa)(0.7 psia) below ambient pressure.

In VOC service means that the piece of equipment contains or contacts a process fluid that is at least 10 percent VOC by weight. (The provisions of §60.485(d) specify how to determine that a piece of equipment is not in VOC service.)

Liquids dripping means any visible leakage from the seal including spraying, misting, clouding, and ice formation.

Open-ended valve or line means any valve, except safety relief valves, having one side of the valve seat in contact with process fluid and one side open to the atmosphere, either directly or through open piping.

Pressure release means the emission of materials resulting from system pressure being greater than set pressure of the pressure relief device.

Process improvement means routine changes made for safety and occupational health requirements, for energy savings, for better utility, for ease of maintenance and operation, for correction of design deficiencies, for bottleneck removal, for changing product requirements, or for environmental control.

Process unit means the components assembled and connected by pipes or ducts to process raw materials and to produce, as intermediate or final products, one or more of the chemicals listed in §60.489. A process unit can operate independently if supplied with sufficient feed or raw

materials and sufficient storage facilities for the product. For the purpose of this subpart, process unit includes any feed, intermediate and final product storage vessels (except as specified in §60.482–1(g)), product transfer racks, and connected ducts and piping. A process unit includes all equipment as defined in this subpart.

Process unit shutdown means a work practice or operational procedure that stops production from a process unit or part of a process unit during which it is technically feasible to clear process material from a process unit or part of a process unit consistent with safety constraints and during which repairs can be accomplished. The following are not considered process unit shutdowns:

(1) An unscheduled work practice or operational procedure that stops production from a process unit or part of a process unit for less than 24 hours.

(2) An unscheduled work practice or operational procedure that would stop production from a process unit or part of a process unit for a shorter period of time than would be required to clear the process unit or part of the process unit of materials and start up the unit, and would result in greater emissions than delay of repair of leaking components until the next scheduled process unit shutdown.

(3) The use of spare equipment and technically feasible bypassing of equipment without stopping production.

Quarter means a 3-month period; the first quarter concludes on the last day of the last full month during the 180 days following initial startup.

Repaired means that equipment is adjusted, or otherwise altered, in order to eliminate a leak as defined in the applicable sections of this subpart and, except for leaks identified in accordance with §§60.482–2(b)(2)(ii) and (d)(6)(ii) and (iii), 60.482–3(f), and 60.482–10(f)(1)(ii), is re-monitored as specified in §60.485(b) to verify that emissions from the equipment are below the applicable leak definition.

Replacement cost means the capital needed to purchase all the depreciable components in a facility.

Sampling connection system means an assembly of equipment within a process unit used during periods of representative operation to take samples of the process fluid. Equipment used to take nonroutine grab samples is not considered a sampling connection system.

Sensor means a device that measures a physical quantity or the change in a physical quantity such as temperature, pressure, flow rate, pH, or liquid level.

Storage vessel means a tank or other vessel that is used to store organic liquids that are used in the process as raw material feedstocks, produced as intermediates or final products, or generated as wastes. Storage vessel does not include vessels permanently attached to motor vehicles, such as trucks, railcars, barges, or ships.

Synthetic organic chemicals manufacturing industry means the industry that produces, as intermediates or final products, one or more of the chemicals listed in §60.489.

Transfer rack means the collection of loading arms and loading hoses, at a single loading rack, that are used to fill tank trucks and/or railcars with organic liquids.

Volatile organic compounds or VOC means, for the purposes of this subpart, any reactive organic compounds as defined in §60.2 Definitions.

[48 FR 48335, Oct. 18, 1983, as amended at 49 FR 22607, May 30, 1984; 49 FR 26738, June 29, 1984; 60 FR 43258, Aug. 18, 1995; 65 FR 61762, Oct. 17, 2000; 65 FR 78276, Dec. 14, 2000; 72

FR 64879, Nov. 16, 2007]

§ 60.482-1 Standards: General.

(a) Each owner or operator subject to the provisions of this subpart shall demonstrate compliance with the requirements of §§60.482–1 through 60.482–10 or §60.480(e) for all equipment within 180 days of initial startup.

(b) Compliance with §§60.482–1 to 60.482–10 will be determined by review of records and reports, review of performance test results, and inspection using the methods and procedures specified in §60.485.

(c)(1) An owner or operator may request a determination of equivalence of a means of emission limitation to the requirements of §§60.482–2, 60.482–3, 60.482–5, 60.482–6, 60.482–7, 60.482–8, and 60.482–10 as provided in §60.484.

(2) If the Administrator makes a determination that a means of emission limitation is at least equivalent to the requirements of §§60.482–2, 60.482–3, 60.482–5, 60.482–6, 60.482–7, 60.482–8, or 60.482–10, an owner or operator shall comply with the requirements of that determination.

(d) Equipment that is in vacuum service is excluded from the requirements of §§60.482–2 to 60.482–10 if it is identified as required in §60.486(e)(5).

(e) Equipment that an owner or operator designates as being in VOC service less than 300 hours (hr)/yr is excluded from the requirements of §§60.482–2 through 60.482–10 if it is identified as required in §60.486(e)(6) and it meets any of the conditions specified in paragraphs (e)(1) through (3) of this section.

(1) The equipment is in VOC service only during startup and shutdown, excluding startup and shutdown between batches of the same campaign for a batch process.

(2) The equipment is in VOC service only during process malfunctions or other emergencies.

(3) The equipment is backup equipment that is in VOC service only when the primary equipment is out of service.

(f)(1) If a dedicated batch process unit operates less than 365 days during a year, an owner or operator may monitor to detect leaks from pumps and valves at the frequency specified in the following table instead of monitoring as specified in §§60.482–2, 60.482–7, and 60.483–2:

Operating time (percent of hours during year)	**Equivalent monitoring frequency time in use**		
	Monthly	**Quarterly**	**Semiannually**
0 to <25	Quarterly	Annually	Annually.
25 to <50	Quarterly	Semiannually	Annually.
50 to <75	Bimonthly	Three quarters	Semiannually.
75 to 100	Monthly	Quarterly	Semiannually.

(2) Pumps and valves that are shared among two or more batch process units that are subject to this subpart may be monitored at the frequencies specified in paragraph (f)(1) of this section, provided the operating time of all such process units is considered.

(3) The monitoring frequencies specified in paragraph (f)(1) of this section are not requirements

for monitoring at specific intervals and can be adjusted to accommodate process operations. An owner or operator may monitor at any time during the specified monitoring period (e.g., month, quarter, year), provided the monitoring is conducted at a reasonable interval after completion of the last monitoring campaign. Reasonable intervals are defined in paragraphs (f)(3)(i) through (iv) of this section.

(i) When monitoring is conducted quarterly, monitoring events must be separated by at least 30 calendar days.

(ii) When monitoring is conducted semiannually (*i.e.* , once every 2 quarters), monitoring events must be separated by at least 60 calendar days.

(iii) When monitoring is conducted in 3 quarters per year, monitoring events must be separated by at least 90 calendar days.

(iv) When monitoring is conducted annually, monitoring events must be separated by at least 120 calendar days.

(g) If the storage vessel is shared with multiple process units, the process unit with the greatest annual amount of stored materials (predominant use) is the process unit the storage vessel is assigned to. If the storage vessel is shared equally among process units, and one of the process units has equipment subject to subpart VVa of this part, the storage vessel is assigned to that process unit. If the storage vessel is shared equally among process units, none of which have equipment subject to subpart VVa of this part, the storage vessel is assigned to any process unit subject to this subpart. If the predominant use of the storage vessel varies from year to year, then the owner or operator must estimate the predominant use initially and reassess every 3 years. The owner or operator must keep records of the information and supporting calculations that show how predominant use is determined. All equipment on the storage vessel must be monitored when in VOC service.

[48 FR 48335, Oct. 18, 1983, as amended at 49 FR 22608, May 30, 1984; 65 FR 78276, Dec. 14, 2000; 72 FR 64880, Nov. 16, 2007]

§ 60.482-2 Standards: Pumps in light liquid service.

(a)(1) Each pump in light liquid service shall be monitored monthly to detect leaks by the methods specified in §60.485(b), except as provided in §60.482–1(c) and (f) and paragraphs (d), (e), and (f) of this section. A pump that begins operation in light liquid service after the initial startup date for the process unit must be monitored for the first time within 30 days after the end of its startup period, except for a pump that replaces a leaking pump and except as provided in §60.482–1(c) and (f) and paragraphs (d), (e), and (f) of this section.

(2) Each pump in light liquid service shall be checked by visual inspection each calendar week for indications of liquids dripping from the pump seal, except as provided in §60.482–1(f).

(b)(1) If an instrument reading of 10,000 ppm or greater is measured, a leak is detected.

(2) If there are indications of liquids dripping from the pump seal, the owner or operator shall follow the procedure specified in either paragraph (b)(2)(i) or (ii) of this section. This requirement does not apply to a pump that was monitored after a previous weekly inspection if the instrument reading for that monitoring event was less than 10,000 ppm and the pump was not repaired since that monitoring event.

(i) Monitor the pump within 5 days as specified in §60.485(b). If an instrument reading of 10,000 ppm or greater is measured, a leak is detected. The leak shall be repaired using the procedures in paragraph (c) of this section.

(ii) Designate the visual indications of liquids dripping as a leak, and repair the leak within 15 days of detection by eliminating the visual indications of liquids dripping.

(c)(1) When a leak is detected, it shall be repaired as soon as practicable, but not later than 15 calendar days after it is detected, except as provided in §60.482–9.

(2) A first attempt at repair shall be made no later than 5 calendar days after each leak is detected. First attempts at repair include, but are not limited to, the practices described in paragraphs (c)(2)(i) and (ii) of this section, where practicable.

(i) Tightening the packing gland nuts;

(ii) Ensuring that the seal flush is operating at design pressure and temperature.

(d) Each pump equipped with a dual mechanical seal system that includes a barrier fluid system is exempt from the requirements of paragraph (a) of this section, provided the requirements specified in paragraphs (d)(1) through (6) of this section are met.

(1) Each dual mechanical seal system is—

(i) Operated with the barrier fluid at a pressure that is at all times greater than the pump stuffing box pressure; or

(ii) Equipped with a barrier fluid degassing reservoir that is routed to a process or fuel gas system or connected by a closed vent system to a control device that complies with the requirements of §60.482–10; or

(iii) Equipped with a system that purges the barrier fluid into a process stream with zero VOC emissions to the atmosphere.

(2) The barrier fluid system is in heavy liquid service or is not in VOC service.

(3) Each barrier fluid system is equipped with a sensor that will detect failure of the seal system, the barrier fluid system, or both.

(4)(i) Each pump is checked by visual inspection, each calendar week, for indications of liquids dripping from the pump seals.

(ii) If there are indications of liquids dripping from the pump seal at the time of the weekly inspection, the owner or operator shall follow the procedure specified in either paragraph (d)(4)(ii)(A) or (B) of this section.

(A) Monitor the pump within 5 days as specified in §60.485(b) to determine if there is a leak of VOC in the barrier fluid. If an instrument reading of 10,000 ppm or greater is measured, a leak is detected.

(B) Designate the visual indications of liquids dripping as a leak.

(5)(i) Each sensor as described in paragraph (d)(3) of this section is checked daily or is equipped with an audible alarm.

(ii) The owner or operator determines, based on design considerations and operating experience, a criterion that indicates failure of the seal system, the barrier fluid system, or both.

(iii) If the sensor indicates failure of the seal system, the barrier fluid system, or both, based on the criterion established in paragraph (d)(5)(ii) of this section, a leak is detected.

(6)(i) When a leak is detected pursuant to paragraph (d)(4)(ii)(A) of this section, it shall be

repaired as specified in paragraph (c) of this section.

(ii) A leak detected pursuant to paragraph (d)(5)(iii) of this section shall be repaired within 15 days of detection by eliminating the conditions that activated the sensor.

(iii) A designated leak pursuant to paragraph (d)(4)(ii)(B) of this section shall be repaired within 15 days of detection by eliminating visual indications of liquids dripping.

(e) Any pump that is designated, as described in §60.486(e)(1) and (2), for no detectable emissions, as indicated by an instrument reading of less than 500 ppm above background, is exempt from the requirements of paragraphs (a), (c), and (d) of this section if the pump:

(1) Has no externally actuated shaft penetrating the pump housing,

(2) Is demonstrated to be operating with no detectable emissions as indicated by an instrument reading of less than 500 ppm above background as measured by the methods specified in §60.485(c), and

(3) Is tested for compliance with paragraph (e)(2) of this section initially upon designation, annually, and at other times requested by the Administrator.

(f) If any pump is equipped with a closed vent system capable of capturing and transporting any leakage from the seal or seals to a process or to a fuel gas system or to a control device that complies with the requirements of §60.482–10, it is exempt from paragraphs (a) through (e) of this section.

(g) Any pump that is designated, as described in §60.486(f)(1), as an unsafe-to-monitor pump is exempt from the monitoring and inspection requirements of paragraphs (a) and (d)(4) through (6) of this section if:

(1) The owner or operator of the pump demonstrates that the pump is unsafe-to-monitor because monitoring personnel would be exposed to an immediate danger as a consequence of complying with paragraph (a) of this section; and

(2) The owner or operator of the pump has a written plan that requires monitoring of the pump as frequently as practicable during safe-to-monitor times but not more frequently than the periodic monitoring schedule otherwise applicable, and repair of the equipment according to the procedures in paragraph (c) of this section if a leak is detected.

(h) Any pump that is located within the boundary of an unmanned plant site is exempt from the weekly visual inspection requirement of paragraphs (a)(2) and (d)(4) of this section, and the daily requirements of paragraph (d)(5) of this section, provided that each pump is visually inspected as often as practicable and at least monthly.

[48 FR 48335, Oct. 18, 1983, as amended at 65 FR 61762, Oct. 17, 2000; 65 FR 78276, Dec. 14, 2000; 72 FR 64880, Nov. 16, 2007]

§ 60.482-3 Standards: Compressors.

(a) Each compressor shall be equipped with a seal system that includes a barrier fluid system and that prevents leakage of VOC to the atmosphere, except as provided in §60.482–1(c) and paragraphs (h), (i), and (j) of this section.

(b) Each compressor seal system as required in paragraph (a) shall be:

(1) Operated with the barrier fluid at a pressure that is greater than the compressor stuffing box pressure; or

(2) Equipped with a barrier fluid system degassing reservoir that is routed to a process or fuel gas system or connected by a closed vent system to a control device that complies with the requirements of §60.482–10; or

(3) Equipped with a system that purges the barrier fluid into a process stream with zero VOC emissions to the atmosphere.

(c) The barrier fluid system shall be in heavy liquid service or shall not be in VOC service.

(d) Each barrier fluid system as described in paragraph (a) shall be equipped with a sensor that will detect failure of the seal system, barrier fluid system, or both.

(e)(1) Each sensor as required in paragraph (d) shall be checked daily or shall be equipped with an audible alarm.

(2) The owner or operator shall determine, based on design considerations and operating experience, a criterion that indicates failure of the seal system, the barrier fluid system, or both.

(f) If the sensor indicates failure of the seal system, the barrier system, or both based on the criterion determined under paragraph (e)(2), a leak is detected.

(g)(1) When a leak is detected, it shall be repaired as soon as practicable, but not later than 15 calendar days after it is detected, except as provided in §60.482–9.

(2) A first attempt at repair shall be made no later than 5 calendar days after each leak is detected.

(h) A compressor is exempt from the requirements of paragraphs (a) and (b) of this section, if it is equipped with a closed vent system to capture and transport leakage from the compressor drive shaft back to a process or fuel gas system or to a control device that complies with the requirements of §60.482–10, except as provided in paragraph (i) of this section.

(i) Any compressor that is designated, as described in §60.486(e) (1) and (2), for no detectable emissions, as indicated by an instrument reading of less than 500 ppm above background, is exempt from the requirements of paragraphs (a)–(h) if the compressor:

(1) Is demonstrated to be operating with no detectable emissions, as indicated by an instrument reading of less than 500 ppm above background, as measured by the methods specified in §60.485(c); and

(2) Is tested for compliance with paragraph (i)(1) of this section initially upon designation, annually, and at other times requested by the Administrator.

(j) Any existing reciprocating compressor in a process unit which becomes an affected facility under provisions of §60.14 or §60.15 is exempt from paragraphs (a) through (e) and (h) of this section, provided the owner or operator demonstrates that recasting the distance piece or replacing the compressor are the only options available to bring the compressor into compliance with the provisions of paragraphs (a) through (e) and (h) of this section.

[48 FR 48335, Oct. 18, 1983, as amended at 65 FR 61762, Oct. 17, 2000; 65 FR 78277, Dec. 14, 2000; 72 FR 64881, Nov. 16, 2007]

§ 60.482-4 Standards: Pressure relief devices in gas/vapor service.

(a) Except during pressure releases, each pressure relief device in gas/vapor service shall be operated with no detectable emissions, as indicated by an instrument reading of less than 500 ppm above background, as determined by the methods specified in §60.485(c).

(b)(1) After each pressure release, the pressure relief device shall be returned to a condition of no detectable emissions, as indicated by an instrument reading of less than 500 ppm above background, as soon as practicable, but no later than 5 calendar days after the pressure release, except as provided in §60.482–9.

(2) No later than 5 calendar days after the pressure release, the pressure relief device shall be monitored to confirm the conditions of no detectable emissions, as indicated by an instrument reading of less than 500 ppm above background, by the methods specified in §60.485(c).

(c) Any pressure relief device that is routed to a process or fuel gas system or equipped with a closed vent system capable of capturing and transporting leakage through the pressure relief device to a control device as described in §60.482–10 is exempted from the requirements of paragraphs (a) and (b) of this section.

(d)(1) Any pressure relief device that is equipped with a rupture disk upstream of the pressure relief device is exempt from the requirements of paragraphs (a) and (b) of this section, provided the owner or operator complies with the requirements in paragraph (d)(2) of this section.

(2) After each pressure release, a new rupture disk shall be installed upstream of the pressure relief device as soon as practicable, but no later than 5 calendar days after each pressure release, except as provided in §60.482–9.

[48 FR 48335, Oct. 18, 1983, as amended at 65 FR 61762, Oct. 17, 2000; 65 FR 78277, Dec. 14, 2000]

§ 60.482-5 Standards: Sampling connection systems.

(a) Each sampling connection system shall be equipped with a closed-purge, closed-loop, or closed-vent system, except as provided in §60.482–1(c) and paragraph (c) of this section.

(b) Each closed-purge, closed-loop, or closed-vent system as required in paragraph (a) of this section shall comply with the requirements specified in paragraphs (b)(1) through (4) of this section.

(1) Gases displaced during filling of the sample container are not required to be collected or captured.

(2) Containers that are part of a closed-purge system must be covered or closed when not being filled or emptied.

(3) Gases remaining in the tubing or piping between the closed-purge system valve(s) and sample container valve(s) after the valves are closed and the sample container is disconnected are not required to be collected or captured.

(4) Each closed-purge, closed-loop, or closed-vent system shall be designed and operated to meet requirements in either paragraph (b)(4)(i), (ii), (iii), or (iv) of this section.

(i) Return the purged process fluid directly to the process line.

(ii) Collect and recycle the purged process fluid to a process.

(iii) Capture and transport all the purged process fluid to a control device that complies with the requirements of §60.482–10.

(iv) Collect, store, and transport the purged process fluid to any of the following systems or facilities:

(A) A waste management unit as defined in §63.111, if the waste management unit is subject to

and operated in compliance with the provisions of 40 CFR part 63, subpart G, applicable to Group 1 wastewater streams;

(B) A treatment, storage, or disposal facility subject to regulation under 40 CFR part 262, 264, 265, or 266;

(C) A facility permitted, licensed, or registered by a state to manage municipal or industrial solid waste, if the process fluids are not hazardous waste as defined in 40 CFR part 261;

(D) A waste management unit subject to and operated in compliance with the treatment requirements of §61.348(a), provided all waste management units that collect, store, or transport the purged process fluid to the treatment unit are subject to and operated in compliance with the management requirements of §§61.343 through 61.347; or

(E) A device used to burn off-specification used oil for energy recovery in accordance with 40 CFR part 279, subpart G, provided the purged process fluid is not hazardous waste as defined in 40 CFR part 261.

(c) In situ sampling systems and sampling systems without purges are exempt from the requirements of paragraphs (a) and (b) of this section.

[60 FR 43258, Aug. 18, 1995, as amended at 65 FR 61762, Oct. 17, 2000; 65 FR 78277, Dec. 14, 2000; 72 FR 64881, Nov. 16, 2007]

§ 60.482-6 Standards: Open-ended valves or lines.

(a)(1) Each open-ended valve or line shall be equipped with a cap, blind flange, plug, or a second valve, except as provided in §60.482–1(c) and paragraphs (d) and (e) of this section.

(2) The cap, blind flange, plug, or second valve shall seal the open end at all times except during operations requiring process fluid flow through the open-ended valve or line.

(b) Each open-ended valve or line equipped with a second valve shall be operated in a manner such that the valve on the process fluid end is closed before the second valve is closed.

(c) When a double block-and-bleed system is being used, the bleed valve or line may remain open during operations that require venting the line between the block valves but shall comply with paragraph (a) at all other times.

(d) Open-ended valves or lines in an emergency shutdown system which are designed to open automatically in the event of a process upset are exempt from the requirements of paragraphs (a), (b) and (c) of this section.

(e) Open-ended valves or lines containing materials which would autocatalytically polymerize or would present an explosion, serious overpressure, or other safety hazard if capped or equipped with a double block and bleed system as specified in paragraphs (a) through (c) of this section are exempt from the requirements of paragraphs (a) through (c) of this section.

[48 FR 48335, Oct. 18, 1983, as amended at 49 FR 22607, May 30, 1984; 65 FR 78277, Dec. 14, 2000; 72 FR 64881, Nov. 16, 2007]

§ 60.482-7 Standards: Valves in gas/vapor service and in light liquid service.

(a)(1) Each valve shall be monitored monthly to detect leaks by the methods specified in §60.485(b) and shall comply with paragraphs (b) through (e) of this section, except as provided in paragraphs (f), (g), and (h) of this section, §60.482–1(c) and (f), and §§60.483–1 and 60.483–2.

(2) A valve that begins operation in gas/vapor service or light liquid service after the initial startup

date for the process unit must be monitored according to paragraphs (a)(2)(i) or (ii), except for a valve that replaces a leaking valve and except as provided in paragraphs (f), (g), and (h) of this section, §60.482–1(c), and §§60.483–1 and 60.483–2.

(i) Monitor the valve as in paragraph (a)(1) of this section. The valve must be monitored for the first time within 30 days after the end of its startup period to ensure proper installation.

(ii) If the valves on the process unit are monitored in accordance with §60.483–1 or §60.483–2, count the new valve as leaking when calculating the percentage of valves leaking as described in §60.483–2(b)(5). If less than 2.0 percent of the valves are leaking for that process unit, the valve must be monitored for the first time during the next scheduled monitoring event for existing valves in the process unit or within 90 days, whichever comes first.

(b) If an instrument reading of 10,000 ppm or greater is measured, a leak is detected.

(c)(1)(i) Any valve for which a leak is not detected for 2 successive months may be monitored the first month of every quarter, beginning with the next quarter, until a leak is detected.

(ii) As an alternative to monitoring all of the valves in the first month of a quarter, an owner or operator may elect to subdivide the process unit into 2 or 3 subgroups of valves and monitor each subgroup in a different month during the quarter, provided each subgroup is monitored every 3 months. The owner or operator must keep records of the valves assigned to each subgroup.

(2) If a leak is detected, the valve shall be monitored monthly until a leak is not detected for 2 successive months.

(d)(1) When a leak is detected, it shall be repaired as soon as practicable, but no later than 15 calendar days after the leak is detected, except as provided in §60.482–9.

(2) A first attempt at repair shall be made no later than 5 calendar days after each leak is detected.

(e) First attempts at repair include, but are not limited to, the following best practices where practicable:

(1) Tightening of bonnet bolts;

(2) Replacement of bonnet bolts;

(3) Tightening of packing gland nuts;

(4) Injection of lubricant into lubricated packing.

(f) Any valve that is designated, as described in §60.486(e)(2), for no detectable emissions, as indicated by an instrument reading of less than 500 ppm above background, is exempt from the requirements of paragraph (a) if the valve:

(1) Has no external actuating mechanism in contact with the process fluid,

(2) Is operated with emissions less than 500 ppm above background as determined by the method specified in §60.485(c), and

(3) Is tested for compliance with paragraph (f)(2) of this section initially upon designation, annually, and at other times requested by the Administrator.

(g) Any valve that is designated, as described in §60.486(f)(1), as an unsafe-to-monitor valve is exempt from the requirements of paragraph (a) if:

(1) The owner or operator of the valve demonstrates that the valve is unsafe to monitor because monitoring personnel would be exposed to an immediate danger as a consequence of complying with paragraph (a), and

(2) The owner or operator of the valve adheres to a written plan that requires monitoring of the valve as frequently as practicable during safe-to-monitor times.

(h) Any valve that is designated, as described in §60.486(f)(2), as a difficult-to-monitor valve is exempt from the requirements of paragraph (a) if:

(1) The owner or operator of the valve demonstrates that the valve cannot be monitored without elevating the monitoring personnel more than 2 meters above a support surface.

(2) The process unit within which the valve is located either becomes an affected facility through §60.14 or §60.15 or the owner or operator designates less than 3.0 percent of the total number of valves as difficult-to-monitor, and

(3) The owner or operator of the valve follows a written plan that requires monitoring of the valve at least once per calendar year.

[48 FR 48335, Oct. 18, 1983, as amended at 49 FR 22608, May 30, 1984; 65 FR 61762, Oct. 17, 2000; 72 FR 64881, Nov. 16, 2007]

§ 60.482-8 Standards: Pumps and valves in heavy liquid service, pressure relief devices in light liquid or heavy liquid service, and connectors.

(a) If evidence of a potential leak is found by visual, audible, olfactory, or any other detection method at pumps and valves in heavy liquid service, pressure relief devices in light liquid or heavy liquid service, and connectors, the owner or operator shall follow either one of the following procedures:

(1) The owner or operator shall monitor the equipment within 5 days by the method specified in §60.485(b) and shall comply with the requirements of paragraphs (b) through (d) of this section.

(2) The owner or operator shall eliminate the visual, audible, olfactory, or other indication of a potential leak within 5 calendar days of detection.

(b) If an instrument reading of 10,000 ppm or greater is measured, a leak is detected.

(c)(1) When a leak is detected, it shall be repaired as soon as practicable, but not later than 15 calendar days after it is detected, except as provided in §60.482–9.

(2) The first attempt at repair shall be made no later than 5 calendar days after each leak is detected.

(d) First attempts at repair include, but are not limited to, the best practices described under §§60.482–2(c)(2) and 60.482–7(e).

[48 CFR 48335, Oct. 18, 1983, as amended at 65 FR 78277, Dec. 14, 2000; 72 FR 64882, Nov. 16, 2007]

§ 60.482-9 Standards: Delay of repair.

(a) Delay of repair of equipment for which leaks have been detected will be allowed if repair within 15 days is technically infeasible without a process unit shutdown. Repair of this equipment shall occur before the end of the next process unit shutdown. Monitoring to verify repair must occur within 15 days after startup of the process unit.

(b) Delay of repair of equipment will be allowed for equipment which is isolated from the process and which does not remain in VOC service.

(c) Delay of repair for valves will be allowed if:

(1) The owner or operator demonstrates that emissions of purged material resulting from immediate repair are greater than the fugitive emissions likely to result from delay of repair, and

(2) When repair procedures are effected, the purged material is collected and destroyed or recovered in a control device complying with §60.482–10.

(d) Delay of repair for pumps will be allowed if:

(1) Repair requires the use of a dual mechanical seal system that includes a barrier fluid system, and

(2) Repair is completed as soon as practicable, but not later than 6 months after the leak was detected.

(e) Delay of repair beyond a process unit shutdown will be allowed for a valve, if valve assembly replacement is necessary during the process unit shutdown, valve assembly supplies have been depleted, and valve assembly supplies had been sufficiently stocked before the supplies were depleted. Delay of repair beyond the next process unit shutdown will not be allowed unless the next process unit shutdown occurs sooner than 6 months after the first process unit shutdown.

(f) When delay of repair is allowed for a leaking pump or valve that remains in service, the pump or valve may be considered to be repaired and no longer subject to delay of repair requirements if two consecutive monthly monitoring instrument readings are below the leak definition.

[48 FR 48335, Oct. 18, 1983, as amended at 65 FR 78277, Dec. 14, 2000; 72 FR 64882, Nov. 16, 2007]

§ 60.482-10 Standards: Closed vent systems and control devices.

(a) Owners or operators of closed vent systems and control devices used to comply with provisions of this subpart shall comply with the provisions of this section.

(b) Vapor recovery systems (for example, condensers and absorbers) shall be designed and operated to recover the VOC emissions vented to them with an efficiency of 95 percent or greater, or to an exit concentration of 20 parts per million by volume, whichever is less stringent.

(c) Enclosed combustion devices shall be designed and operated to reduce the VOC emissions vented to them with an efficiency of 95 percent or greater, or to an exit concentration of 20 parts per million by volume, on a dry basis, corrected to 3 percent oxygen, whichever is less stringent or to provide a minimum residence time of 0.75 seconds at a minimum temperature of 816 °C.

(d) Flares used to comply with this subpart shall comply with the requirements of §60.18.

(e) Owners or operators of control devices used to comply with the provisions of this subpart shall monitor these control devices to ensure that they are operated and maintained in conformance with their designs.

(f) Except as provided in paragraphs (i) through (k) of this section, each closed vent system shall be inspected according to the procedures and schedule specified in paragraphs (f)(1) and (f)(2) of this section.

(1) If the vapor collection system or closed vent system is constructed of hard-piping, the owner or operator shall comply with the requirements specified in paragraphs (f)(1)(i) and (f)(1)(ii) of this

section:

(i) Conduct an initial inspection according to the procedures in §60.485(b); and

(ii) Conduct annual visual inspections for visible, audible, or olfactory indications of leaks.

(2) If the vapor collection system or closed vent system is constructed of ductwork, the owner or operator shall:

(i) Conduct an initial inspection according to the procedures in §60.485(b); and

(ii) Conduct annual inspections according to the procedures in §60.485(b).

(g) Leaks, as indicated by an instrument reading greater than 500 parts per million by volume above background or by visual inspections, shall be repaired as soon as practicable except as provided in paragraph (h) of this section.

(1) A first attempt at repair shall be made no later than 5 calendar days after the leak is detected.

(2) Repair shall be completed no later than 15 calendar days after the leak is detected.

(h) Delay of repair of a closed vent system for which leaks have been detected is allowed if the repair is technically infeasible without a process unit shutdown or if the owner or operator determines that emissions resulting from immediate repair would be greater than the fugitive emissions likely to result from delay of repair. Repair of such equipment shall be complete by the end of the next process unit shutdown.

(i) If a vapor collection system or closed vent system is operated under a vacuum, it is exempt from the inspection requirements of paragraphs (f)(1)(i) and (f)(2) of this section.

(j) Any parts of the closed vent system that are designated, as described in paragraph (l)(1) of this section, as unsafe to inspect are exempt from the inspection requirements of paragraphs (f)(1)(i) and (f)(2) of this section if they comply with the requirements specified in paragraphs (j)(1) and (j)(2) of this section:

(1) The owner or operator determines that the equipment is unsafe to inspect because inspecting personnel would be exposed to an imminent or potential danger as a consequence of complying with paragraphs (f)(1)(i) or (f)(2) of this section; and

(2) The owner or operator has a written plan that requires inspection of the equipment as frequently as practicable during safe-to-inspect times.

(k) Any parts of the closed vent system that are designated, as described in paragraph (l)(2) of this section, as difficult to inspect are exempt from the inspection requirements of paragraphs (f)(1)(i) and (f)(2) of this section if they comply with the requirements specified in paragraphs (k)(1) through (k)(3) of this section:

(1) The owner or operator determines that the equipment cannot be inspected without elevating the inspecting personnel more than 2 meters above a support surface; and

(2) The process unit within which the closed vent system is located becomes an affected facility through §§60.14 or 60.15, or the owner or operator designates less than 3.0 percent of the total number of closed vent system equipment as difficult to inspect; and

(3) The owner or operator has a written plan that requires inspection of the equipment at least once every 5 years. A closed vent system is exempt from inspection if it is operated under a vacuum.

(l) The owner or operator shall record the information specified in paragraphs (l)(1) through (l)(5) of this section.

(1) Identification of all parts of the closed vent system that are designated as unsafe to inspect, an explanation of why the equipment is unsafe to inspect, and the plan for inspecting the equipment.

(2) Identification of all parts of the closed vent system that are designated as difficult to inspect, an explanation of why the equipment is difficult to inspect, and the plan for inspecting the equipment.

(3) For each inspection during which a leak is detected, a record of the information specified in §60.486(c).

(4) For each inspection conducted in accordance with §60.485(b) during which no leaks are detected, a record that the inspection was performed, the date of the inspection, and a statement that no leaks were detected.

(5) For each visual inspection conducted in accordance with paragraph (f)(1)(ii) of this section during which no leaks are detected, a record that the inspection was performed, the date of the inspection, and a statement that no leaks were detected.

(m) Closed vent systems and control devices used to comply with provisions of this subpart shall be operated at all times when emissions may be vented to them.

[48 FR 48335, Oct. 18, 1983, as amended at 51 FR 2702, Jan. 21, 1986; 60 FR 43258, Aug. 18, 1995; 61 FR 29878, June 12, 1996; 65 FR 78277, Dec. 14, 2000]

§ 60.483-1 Alternative standards for valves—allowable percentage of valves leaking.

(a) An owner or operator may elect to comply with an allowable percentage of valves leaking of equal to or less than 2.0 percent.

(b) The following requirements shall be met if an owner or operator wishes to comply with an allowable percentage of valves leaking:

(1) An owner or operator must notify the Administrator that the owner or operator has elected to comply with the allowable percentage of valves leaking before implementing this alternative standard, as specified in §60.487(d).

(2) A performance test as specified in paragraph (c) of this section shall be conducted initially upon designation, annually, and at other times requested by the Administrator.

(3) If a valve leak is detected, it shall be repaired in accordance with §60.482–7(d) and (e).

(c) Performance tests shall be conducted in the following manner:

(1) All valves in gas/vapor and light liquid service within the affected facility shall be monitored within 1 week by the methods specified in §60.485(b).

(2) If an instrument reading of 10,000 ppm or greater is measured, a leak is detected.

(3) The leak percentage shall be determined by dividing the number of valves for which leaks are detected by the number of valves in gas/vapor and light liquid service within the affected facility.

(d) Owners and operators who elect to comply with this alternative standard shall not have an affected facility with a leak percentage greater than 2.0 percent, determined as described in §60.485(h).

[48 FR 48335, Oct. 18, 1983, as amended at 65 FR 61762, Oct. 17, 2000; 65 FR 78278, Dec. 14, 2000; 72 FR 64882, Nov. 16, 2007]

§ 60.483-2 Alternative standards for valves—skip period leak detection and repair.

(a)(1) An owner or operator may elect to comply with one of the alternative work practices specified in paragraphs (b)(2) and (3) of this section.

(2) An owner or operator must notify the Administrator before implementing one of the alternative work practices, as specified in §60.487(d).

(b)(1) An owner or operator shall comply initially with the requirements for valves in gas/vapor service and valves in light liquid service, as described in §60.482–7.

(2) After 2 consecutive quarterly leak detection periods with the percent of valves leaking equal to or less than 2.0, an owner or operator may begin to skip 1 of the quarterly leak detection periods for the valves in gas/vapor and light liquid service.

(3) After 5 consecutive quarterly leak detection periods with the percent of valves leaking equal to or less than 2.0, an owner or operator may begin to skip 3 of the quarterly leak detection periods for the valves in gas/vapor and light liquid service.

(4) If the percent of valves leaking is greater than 2.0, the owner or operator shall comply with the requirements as described in §60.482–7 but can again elect to use this section.

(5) The percent of valves leaking shall be determined as described in §60.485(h).

(6) An owner or operator must keep a record of the percent of valves found leaking during each leak detection period.

(7) A valve that begins operation in gas/vapor service or light liquid service after the initial startup date for a process unit following one of the alternative standards in this section must be monitored in accordance with §60.482–7(a)(2)(i) or (ii) before the provisions of this section can be applied to that valve.

[48 FR 48335, Oct. 18, 1983, as amended at 65 FR 61762, Oct. 17, 2000; 65 FR 78278, Dec. 14, 2000; 72 FR 64882, Nov. 16, 2007]

§ 60.484 Equivalence of means of emission limitation.

(a) Each owner or operator subject to the provisions of this subpart may apply to the Administrator for determination of equivalence for any means of emission limitation that achieves a reduction in emissions of VOC at least equivalent to the reduction in emissions of VOC achieved by the controls required in this subpart.

(b) Determination of equivalence to the equipment, design, and operational requirements of this subpart will be evaluated by the following guidelines:

(1) Each owner or operator applying for an equivalence determination shall be responsible for collecting and verifying test data to demonstrate equivalence of means of emission limitation.

(2) The Administrator will compare test data for demonstrating equivalence of the means of emission limitation to test data for the equipment, design, and operational requirements.

(3) The Administrator may condition the approval of equivalence on requirements that may be necessary to assure operation and maintenance to achieve the same emission reduction as the equipment, design, and operational requirements.

(c) Determination of equivalence to the required work practices in this subpart will be evaluated by the following guidelines:

(1) Each owner or operator applying for a determination of equivalence shall be responsible for collecting and verifying test data to demonstrate equivalence of an equivalent means of emission limitation.

(2) For each affected facility for which a determination of equivalence is requested, the emission reduction achieved by the required work practice shall be demonstrated.

(3) For each affected facility, for which a determination of equivalence is requested, the emission reduction achieved by the equivalent means of emission limitation shall be demonstrated.

(4) Each owner or operator applying for a determination of equivalence shall commit in writing to work practice(s) that provide for emission reductions equal to or greater than the emission reductions achieved by the required work practice.

(5) The Administrator will compare the demonstrated emission reduction for the equivalent means of emission limitation to the demonstrated emission reduction for the required work practices and will consider the commitment in paragraph (c)(4).

(6) The Administrator may condition the approval of equivalence on requirements that may be necessary to assure operation and maintenance to achieve the same emission reduction as the required work practice.

(d) An owner or operator may offer a unique approach to demonstrate the equivalence of any equivalent means of emission limitation.

(e)(1) After a request for determination of equivalence is received, the Administrator will publish a notice in theFederal Registerand provide the opportunity for public hearing if the Administrator judges that the request may be approved.

(2) After notice and opportunity for public hearing, the Administrator will determine the equivalence of a means of emission limitation and will publish the determination in theFederal Register.

(3) Any equivalent means of emission limitations approved under this section shall constitute a required work practice, equipment, design, or operational standard within the meaning of section 111(h)(1) of the Clean Air Act.

(f)(1) Manufacturers of equipment used to control equipment leaks of VOC may apply to the Administrator for determination of equivalence for any equivalent means of emission limitation that achieves a reduction in emissions of VOC achieved by the equipment, design, and operational requirements of this subpart.

(2) The Administrator will make an equivalence determination according to the provisions of paragraphs (b), (c), (d), and (e) of this section.

[48 FR 48335, Oct. 18, 1983, as amended at 65 FR 61762, Oct. 17, 2000; 72 FR 64882, Nov. 16, 2007]

§ 60.485 Test methods and procedures.

(a) In conducting the performance tests required in §60.8, the owner or operator shall use as reference methods and procedures the test methods in appendix A of this part or other methods and procedures as specified in this section, except as provided in §60.8(b).

(b) The owner or operator shall determine compliance with the standards in §§60.482–1 through

60.482–10, 60.483, and 60.484 as follows:

(1) Method 21 shall be used to determine the presence of leaking sources. The instrument shall be calibrated before use each day of its use by the procedures specified in Method 21. The following calibration gases shall be used:

(i) Zero air (less than 10 ppm of hydrocarbon in air); and

(ii) A mixture of methane or n-hexane and air at a concentration of about, but less than, 10,000 ppm methane or n-hexane.

(c) The owner or operator shall determine compliance with the no detectable emission standards in §§60.482–2(e), 60.482–3(i), 60.482–4, 60.482–7(f), and 60.482–10(e) as follows:

(1) The requirements of paragraph (b) shall apply.

(2) Method 21 shall be used to determine the background level. All potential leak interfaces shall be traversed as close to the interface as possible. The arithmetic difference between the maximum concentration indicated by the instrument and the background level is compared with 500 ppm for determining compliance.

(d) The owner or operator shall test each piece of equipment unless he demonstrates that a process unit is not in VOC service, i.e., that the VOC content would never be reasonably expected to exceed 10 percent by weight. For purposes of this demonstration, the following methods and procedures shall be used:

(1) Procedures that conform to the general methods in ASTM E260–73, 91, or 96, E168–67, 77, or 92, E169–63, 77, or 93 (incorporated by reference—see §60.17) shall be used to determine the percent VOC content in the process fluid that is contained in or contacts a piece of equipment.

(2) Organic compounds that are considered by the Administrator to have negligible photochemical reactivity may be excluded from the total quantity of organic compounds in determining the VOC content of the process fluid.

(3) Engineering judgment may be used to estimate the VOC content, if a piece of equipment had not been shown previously to be in service. If the Administrator disagrees with the judgment, paragraphs (d) (1) and (2) of this section shall be used to resolve the disagreement.

(e) The owner or operator shall demonstrate that a piece of equipment is in light liquid service by showing that all the following conditions apply:

(1) The vapor pressure of one or more of the organic components is greater than 0.3 kPa at 20 °C (1.2 in. H_2O at 68 °F). Standard reference texts or ASTM D2879–83, 96, or 97 (incorporated by reference—see §60.17) shall be used to determine the vapor pressures.

(2) The total concentration of the pure organic components having a vapor pressure greater than 0.3 kPa at 20 °C (1.2 in. H_2O at 68 °F) is equal to or greater than 20 percent by weight.

(3) The fluid is a liquid at operating conditions.

(f) Samples used in conjunction with paragraphs (d), (e), and (g) of this section shall be representative of the process fluid that is contained in or contacts the equipment or the gas being combusted in the flare.

(g) The owner or operator shall determine compliance with the standards of flares as follows:

(1) Method 22 shall be used to determine visible emissions.

(2) A thermocouple or any other equivalent device shall be used to monitor the presence of a pilot flame in the flare.

(3) The maximum permitted velocity for air assisted flares shall be computed using the following equation:

$$V_{max} = K_1 + K_2 H_T$$

Where:

V_{max}= Maximum permitted velocity, m/sec (ft/sec)

H_T= Net heating value of the gas being combusted, MJ/scm (Btu/scf).

K_1= 8.706 m/sec (metric units)

= 28.56 ft/sec (English units)

K_2= 0.7084 m^4 /(MJ-sec) (metric units)

= 0.087 ft^4 /(Btu-sec) (English units)

(4) The net heating value (H_T) of the gas being combusted in a flare shall be computed using the following equation:

$$H_T = K \sum_{i=1}^{n} C_i H_i$$

Where:

K = Conversion constant, 1.740×10^{-7} (g-mole)(MJ)/(ppm-scm-kcal) (metric units) = 4.674×10^{-6} [(g-mole)(Btu)/(ppm-scf-kcal)] (English units)

C_i= Concentration of sample component “i,” ppm

H_i= Net heat of combustion of sample component “i” at 25 °C and 760 mm Hg (77 °F and 14.7 psi), kcal/g-mole

(5) Method 18 or ASTM D6420–99 (2004) (where the target compound(s) are those listed in Section 1.1 of ASTM D6420–99, and the target concentration is between 150 parts per billion by volume and 100 parts per million by volume) and ASTM D2504–67, 77 or 88 (Reapproved 1993) (incorporated by reference—see §60.17) shall be used to determine the concentration of sample component “i.”

(6) ASTM D2382–76 or 88 or D4809–95 (incorporated by reference—see §60.17) shall be used to determine the net heat of combustion of component “i” if published values are not available or cannot be calculated.

(7) Method 2, 2A, 2C, or 2D, as appropriate, shall be used to determine the actual exit velocity of a flare. If needed, the unobstructed (free) cross-sectional area of the flare tip shall be used.

(h) The owner or operator shall determine compliance with §60.483–1 or §60.483–2 as follows:

(1) The percent of valves leaking shall be determined using the following equation:

$\%V_L = (V_L/V_T) * 100$

Where:

$\%V_L$= Percent leaking valves

V_L= Number of valves found leaking

V_T= The sum of the total number of valves monitored

(2) The total number of valves monitored shall include difficult-to-monitor and unsafe-to-monitor valves only during the monitoring period in which those valves are monitored.

(3) The number of valves leaking shall include valves for which repair has been delayed.

(4) Any new valve that is not monitored within 30 days of being placed in service shall be included in the number of valves leaking and the total number of valves monitored for the monitoring period in which the valve is placed in service.

(5) If the process unit has been subdivided in accordance with §60.482–7(c)(1)(ii), the sum of valves found leaking during a monitoring period includes all subgroups.

(6) The total number of valves monitored does not include a valve monitored to verify repair.

[54 FR 6678, Feb. 14, 1989, as amended at 54 FR 27016, June 27, 1989; 65 FR 61763, Oct. 17, 2000; 72 FR 64882, Nov. 16, 2007]

§ 60.486 Recordkeeping requirements.

(a)(1) Each owner or operator subject to the provisions of this subpart shall comply with the recordkeeping requirements of this section.

(2) An owner or operator of more than one affected facility subject to the provisions of this subpart may comply with the recordkeeping requirements for these facilities in one recordkeeping system if the system identifies each record by each facility.

(b) When each leak is detected as specified in §§60.482–2, 60.482–3, 60.482–7, 60.482–8, and 60.483–2, the following requirements apply:

(1) A weatherproof and readily visible identification, marked with the equipment identification number, shall be attached to the leaking equipment.

(2) The identification on a valve may be removed after it has been monitored for 2 successive months as specified in §60.482–7(c) and no leak has been detected during those 2 months.

(3) The identification on equipment except on a valve, may be removed after it has been repaired.

(c) When each leak is detected as specified in §§60.482–2, 60.482–3, 60.482–7, 60.482–8, and 60.483–2, the following information shall be recorded in a log and shall be kept for 2 years in a readily accessible location:

(1) The instrument and operator identification numbers and the equipment identification number.

(2) The date the leak was detected and the dates of each attempt to repair the leak.

(3) Repair methods applied in each attempt to repair the leak.

(4) “Above 10,000” if the maximum instrument reading measured by the methods specified in §60.485(a) after each repair attempt is equal to or greater than 10,000 ppm.

(5) “Repair delayed” and the reason for the delay if a leak is not repaired within 15 calendar days after discovery of the leak.

(6) The signature of the owner or operator (or designate) whose decision it was that repair could not be effected without a process shutdown.

(7) The expected date of successful repair of the leak if a leak is not repaired within 15 days.

(8) Dates of process unit shutdowns that occur while the equipment is unrepaired.

(9) The date of successful repair of the leak.

(d) The following information pertaining to the design requirements for closed vent systems and control devices described in §60.482–10 shall be recorded and kept in a readily accessible location:

(1) Detailed schematics, design specifications, and piping and instrumentation diagrams.

(2) The dates and descriptions of any changes in the design specifications.

(3) A description of the parameter or parameters monitored, as required in §60.482–10(e), to ensure that control devices are operated and maintained in conformance with their design and an explanation of why that parameter (or parameters) was selected for the monitoring.

(4) Periods when the closed vent systems and control devices required in §§60.482–2, 60.482–3, 60.482–4, and 60.482–5 are not operated as designed, including periods when a flare pilot light does not have a flame.

(5) Dates of startups and shutdowns of the closed vent systems and control devices required in §§60.482–2, 60.482–3, 60.482–4, and 60.482–5.

(e) The following information pertaining to all equipment subject to the requirements in §§60.482–1 to 60.482–10 shall be recorded in a log that is kept in a readily accessible location:

(1) A list of identification numbers for equipment subject to the requirements of this subpart.

(2)(i) A list of identification numbers for equipment that are designated for no detectable emissions under the provisions of §§60.482–2(e), 60.482–3(i) and 60.482–7(f).

(ii) The designation of equipment as subject to the requirements of §60.482–2(e), §60.482–3(i), or §60.482–7(f) shall be signed by the owner or operator. Alternatively, the owner or operator may establish a mechanism with their permitting authority that satisfies this requirement.

(3) A list of equipment identification numbers for pressure relief devices required to comply with §60.482–4.

(4)(i) The dates of each compliance test as required in §§60.482–2(e), 60.482–3(i), 60.482–4, and 60.482–7(f).

(ii) The background level measured during each compliance test.

(iii) The maximum instrument reading measured at the equipment during each compliance test.

(5) A list of identification numbers for equipment in vacuum service.

(6) A list of identification numbers for equipment that the owner or operator designates as operating in VOC service less than 300 hr/yr in accordance with §60.482–1(e), a description of the conditions under which the equipment is in VOC service, and rationale supporting the

designation that it is in VOC service less than 300 hr/yr.

(f) The following information pertaining to all valves subject to the requirements of §60.482–7(g) and (h) and to all pumps subject to the requirements of §60.482–2(g) shall be recorded in a log that is kept in a readily accessible location:

(1) A list of identification numbers for valves and pumps that are designated as unsafe-to-monitor, an explanation for each valve or pump stating why the valve or pump is unsafe-to-monitor, and the plan for monitoring each valve or pump.

(2) A list of identification numbers for valves that are designated as difficult-to-monitor, an explanation for each valve stating why the valve is difficult-to-monitor, and the schedule for monitoring each valve.

(g) The following information shall be recorded for valves complying with §60.483–2:

(1) A schedule of monitoring.

(2) The percent of valves found leaking during each monitoring period.

(h) The following information shall be recorded in a log that is kept in a readily accessible location:

(1) Design criterion required in §§60.482–2(d)(5) and 60.482–3(e)(2) and explanation of the design criterion; and

(2) Any changes to this criterion and the reasons for the changes.

(i) The following information shall be recorded in a log that is kept in a readily accessible location for use in determining exemptions as provided in §60.480(d):

(1) An analysis demonstrating the design capacity of the affected facility,

(2) A statement listing the feed or raw materials and products from the affected facilities and an analysis demonstrating whether these chemicals are heavy liquids or beverage alcohol, and

(3) An analysis demonstrating that equipment is not in VOC service.

(j) Information and data used to demonstrate that a piece of equipment is not in VOC service shall be recorded in a log that is kept in a readily accessible location.

(k) The provisions of §60.7 (b) and (d) do not apply to affected facilities subject to this subpart.

[48 FR 48335, Oct. 18, 1983, as amended at 65 FR 61763, Oct. 17, 2000; 65 FR 78278, Dec. 14, 2000; 72 FR 64883, Nov. 16, 2007]

§ 60.487 Reporting requirements.

(a) Each owner or operator subject to the provisions of this subpart shall submit semiannual reports to the Administrator beginning six months after the initial startup date.

(b) The initial semiannual report to the Administrator shall include the following information:

(1) Process unit identification.

(2) Number of valves subject to the requirements of §60.482–7, excluding those valves designated for no detectable emissions under the provisions of §60.482–7(f).

(3) Number of pumps subject to the requirements of §60.482–2, excluding those pumps designated for no detectable emissions under the provisions of §60.482–2(e) and those pumps complying with §60.482–2(f).

(4) Number of compressors subject to the requirements of §60.482–3, excluding those compressors designated for no detectable emissions under the provisions of §60.482–3(i) and those compressors complying with §60.482–3(h).

(c) All semiannual reports to the Administrator shall include the following information, summarized from the information in §60.486:

(1) Process unit identification.

(2) For each month during the semiannual reporting period,

(i) Number of valves for which leaks were detected as described in §60.482–7(b) or §60.483–2,

(ii) Number of valves for which leaks were not repaired as required in §60.482–7(d)(1),

(iii) Number of pumps for which leaks were detected as described in §60.482–2(b), (d)(4)(ii)(A) or (B), or (d)(5)(iii),

(iv) Number of pumps for which leaks were not repaired as required in §60.482–2(c)(1) and (d)(6),

(v) Number of compressors for which leaks were detected as described in §60.482–3(f),

(vi) Number of compressors for which leaks were not repaired as required in §60.482–3(g)(1), and

(vii) The facts that explain each delay of repair and, where appropriate, why a process unit shutdown was technically infeasible.

(3) Dates of process unit shutdowns which occurred within the semiannual reporting period.

(4) Revisions to items reported according to paragraph (b) if changes have occurred since the initial report or subsequent revisions to the initial report.

(d) An owner or operator electing to comply with the provisions of §§60.483–1 or 60.483–2 shall notify the Administrator of the alternative standard selected 90 days before implementing either of the provisions.

(e) An owner or operator shall report the results of all performance tests in accordance with §60.8 of the General Provisions. The provisions of §60.8(d) do not apply to affected facilities subject to the provisions of this subpart except that an owner or operator must notify the Administrator of the schedule for the initial performance tests at least 30 days before the initial performance tests.

(f) The requirements of paragraphs (a) through (c) of this section remain in force until and unless EPA, in delegating enforcement authority to a State under section 111(c) of the Act, approves reporting requirements or an alternative means of compliance surveillance adopted by such State. In that event, affected sources within the State will be relieved of the obligation to comply with the requirements of paragraphs (a) through (c) of this section, provided that they comply with the requirements established by the State.

[48 FR 48335, Oct. 18, 1983, as amended at 49 FR 22608, May 30, 1984; 65 FR 61763, Oct. 17, 2000; 72 FR 64883, Nov. 16, 2007]

§ 60.488 Reconstruction.

For the purposes of this subpart:

(a) The cost of the following frequently replaced components of the facility shall not be considered in calculating either the “fixed capital cost of the new components” or the “fixed capital costs that would be required to construct a comparable new facility” under §60.15: pump seals, nuts and bolts, rupture disks, and packings.

(b) Under §60.15, the “fixed capital cost of new components” includes the fixed capital cost of all depreciable components (except components specified in §60.488 (a)) which are or will be replaced pursuant to all continuous programs of component replacement which are commenced within any 2-year period following the applicability date for the appropriate subpart. (See the “Applicability and designation of affected facility” section of the appropriate subpart.) For purposes of this paragraph, “commenced” means that an owner or operator has undertaken a continuous program of component replacement or that an owner or operator has entered into a contractual obligation to undertake and complete, within a reasonable time, a continuous program of component replacement.

[49 FR 22608, May 30, 1984]

§ 60.489 List of chemicals produced by affected facilities.

The following chemicals are produced, as intermediates or final products, by process units covered under this subpart. The applicability date for process units producing one or more of these chemicals is January 5, 1981.

CAS No.[a]	Chemical
105–57–7	Acetal.
75–07–0	Acetaldehyde.
107–89–1	Acetaldol.
60–35–5	Acetamide.
103–84–4	Acetanilide.
64–19–7	Acetic acid.
108–24–7	Acetic anhydride.
67–64–1	Acetone.
75–86–5	Acetone cyanohydrin.
75–05–8	Acetonitrile.
98–86–2	Acetophenone.
75–36–5	Acetyl chloride.
74–86–2	Acetylene.
107–02–8	Acrolein.
79–06–1	Acrylamide.
79–10–7	Acrylic acid.
107–13–1	Acrylonitrile.
124–04–9	Adipic acid.

CAS No.[a]	Chemical
111–69–3	Adiponitrile.
([b])	Alkyl naphthalenes.
107–18–6	Allyl alcohol.
107–05–1	Allyl chloride.
1321–11–5	Aminobenzoic acid.
111–41–1	Aminoethylethanolamine.
123–30–8	p-Aminophenol.
628–63–7, 123–92–2	Amyl acetates.
71–41–0[c]	Amyl alcohols.
110–58–7	Amyl amine.
543–59–9	Amyl chloride.
110–66–7[c]	Amyl mercaptans.
1322–06–1	Amyl phenol.
62–53–3	Aniline.
142–04–1	Aniline hydrochloride.
29191–52–4	Anisidine.
100–66–3	Anisole.
118–92–3	Anthranilic acid.
84–65–1	Anthraquinone.
100–52–7	Benzaldehyde.
55–21–0	Benzamide.
71–43–2	Benzene.
98–48–6	Benzenedisulfonic acid.
98–11–3	Benzenesulfonic acid.
134–81–6	Benzil.
76–93–7	Benzilic acid.
65–85–0	Benzoic acid.
119–53–9	Benzoin.
100–47–0	Benzonitrile.
119–61–9	Benzophenone.
98–07–7	Benzotrichloride.
98–88–4	Benzoyl chloride.

CAS No.[a]	Chemical
100–51–6	Benzyl alcohol.
100–46–9	Benzylamine.
120–51–4	Benzyl benzoate.
100–44–7	Benzyl chloride.
98–87–3	Benzyl dichloride.
92–52–4	Biphenyl.
80–05–7	Bisphenol A.
10–86–1	Bromobenzene.
27497–51–4	Bromonaphthalene.
106–99–0	Butadiene.
106–98–9	1-butene.
123–86–4	n-butyl acetate.
141–32–2	n-butyl acrylate.
71–36–3	n-butyl alcohol.
78–92–2	s-butyl alcohol.
75–65–0	t-butyl alcohol.
109–73–9	n-butylamine.
13952–84–6	s-butylamine.
75–64–9	t-butylamine.
98–73–7	p-tert-butyl benzoic acid.
107–88–0	1,3-butylene glycol.
123–72–8	n-butyraldehyde.
107–92–6	Butyric acid.
106–31–0	Butyric anhydride.
109–74–0	Butyronitrile.
105–60–2	Caprolactam.
75–1–50	Carbon disulfide.
558–13–4	Carbon tetrabromide.
56–23–5	Carbon tetrachloride.
9004–35–7	Cellulose acetate.
79–11–8	Chloroacetic acid.
108–42–9	m-chloroaniline.

CAS No.[a]	Chemical
95–51–2	o-chloroaniline.
106–47–8	p-chloroaniline.
35913–09–8	Chlorobenzaldehyde.
108–90–7	Chlorobenzene.
118–91–2, 535–80–8, 74–11–3[c]	Chlorobenzoic acid.
2136–81–4, 2136–89–2, 5216–25–1[c]	Chlorobenzotrichloride.
1321–03–5	Chlorobenzoyl chloride.
25497–29–4	Chlorodifluoromethane.
75–45–6	Chlorodifluoroethane.
67–66–3	Chloroform.
25586–43–0	Chloronaphthalene.
88–73–3	o-chloronitrobenzene.
100–00–5	p-chloronitrobenzene.
25167–80–0	Chlorophenols.
126–99–8	Chloroprene.
7790–94–5	Chlorosulfonic acid.
108–41–8	m-chlorotoluene.
95–49–8	o-chlorotoluene.
106–43–4	p-chlorotoluene.
75–72–9	Chlorotrifluoromethane.
108–39–4	m-cresol.
95–48–7	o-cresol.
106–44–5	p-cresol.
1319–77–3	Mixed cresols.
1319–77–3	Cresylic acid.
4170–30–0	Crotonaldehyde.
3724–65–0	Crotonic acid.
98–82–8	Cumene.
80–15–9	Cumene hydroperoxide.
372–09–8	Cyanoacetic acid.
506–77–4	Cyanogen chloride.
108–80–5	Cyanuric acid.

CAS No.[a]	Chemical
108–77–0	Cyanuric chloride.
110–82–7	Cyclohexane.
108–93–0	Cyclohexanol.
108–94–1	Cyclohexanone.
110–83–8	Cyclohexene.
108–91–8	Cyclohexylamine.
111–78–4	Cyclooctadiene.
112–30–1	Decanol.
123–42–2	Diacetone alcohol.
27576–04–1	Diaminobenzoic acid.
95–76–1, 95–82–9, 554–00–7, 608–27–5, 608–31–1, 626–43–7, 27134–27–6, 57311–92–9[c]	Dichloroaniline.
541–73–1	m-dichlorobenzene.
95–50–1	o-dichlorobenzene.
106–46–7	p-dichlorobenzene.
75–71–8	Dichlorodifluoromethane.
111–44–4	Dichloroethyl ether.
107–06–2	1,2-dichloroethane (EDC).
96–23–1	Dichlorohydrin.
26952–23–8	Dichloropropene.
101–83–7	Dicyclohexylamine.
109–89–7	Diethylamine.
111–46–6	Diethylene glycol.
112–36–7	Diethylene glycol diethyl ether.
111–96–6	Diethylene glycol dimethyl ether.
112–34–5	Diethylene glycol monobutyl ether.
124–17–4	Diethylene glycol monobutyl ether acetate.
111–90–0	Diethylene glycol monoethyl ether.
112–15–2	Diethylene glycol monoethyl ether acetate.
111–77–3	Diethylene glycol monomethyl ether.
64–67–5	Diethyl sulfate.
75–37–6	Difluoroethane.

CAS No.[a]	Chemical
25167–70–8	Diisobutylene.
26761–40–0	Diisodecyl phthalate.
27554–26–3	Diisooctyl phthalate.
674–82–8	Diketene.
124–40–3	Dimethylamine.
121–69–7	N,N-dimethylaniline.
115–10–6	N,N-dimethyl ether.
68–12–2	N,N-dimethylformamide.
57–14–7	Dimethylhydrazine.
77–78–1	Dimethyl sulfate.
75–18–3	Dimethyl sulfide.
67–68–5	Dimethyl sulfoxide.
120–61–6	Dimethyl terephthalate.
99–34–3	3,5-dinitrobenzoic acid.
51–28–5	Dinitrophenol.
25321–14–6	Dinitrotoluene.
123–91–1	Dioxane.
646–06–0	Dioxilane.
122–39–4	Diphenylamine.
101–84–8	Diphenyl oxide.
102–08–9	Diphenyl thiourea.
25265–71–8	Dipropylene glycol.
25378–22–7	Dodecene.
28675–17–4	Dodecylaniline.
27193–86–8	Dodecylphenol.
106–89–8	Epichlorohydrin.
64–17–5	Ethanol.
141–43–5[c]	Ethanolamines.
141–78–6	Ethyl acetate.
141–97–9	Ethyl acetoacetate.
140–88–5	Ethyl acrylate.
75–04–7	Ethylamine.

CAS No.[a]	Chemical
100–41–4	Ethylbenzene.
74–96–4	Ethyl bromide.
9004–57–3	Ethylcellulose.
75–00–3	Ethyl chloride.
105–39–5	Ethyl chloroacetate.
105–56–6	Ethylcyanoacetate.
74–85–1	Ethylene.
96–49–1	Ethylene carbonate.
107–07–3	Ethylene chlorohydrin.
107–15–3	Ethylenediamine.
106–93–4	Ethylene dibromide.
107–21–1	Ethylene glycol.
111–55–7	Ethylene glycol diacetate.
110–71–4	Ethylene glycol dimethyl ether.
111–76–2	Ethylene glycol monobutyl ether.
112–07–2	Ethylene glycol monobutyl ether acetate.
110–80–5	Ethylene glycol monoethyl ether.
111–15–9	Ethylene glycol monethyl ether acetate.
109–86–4	Ethylene glycol monomethyl ether.
110–49–6	Ethylene glycol monomethyl ether acetate.
122–99–6	Ethylene glycol monophenyl ether.
2807–30–9	Ethylene glycol monopropyl ether.
75–21–8	Ethylene oxide.
60–29–7	Ethyl ether
104–76–7	2-ethylhexanol.
122–51–0	Ethyl orthoformate.
95–92–1	Ethyl oxalate.
41892–71–1	Ethyl sodium oxalacetate.
50–00–0	Formaldehyde.
75–12–7	Formamide.
64–18–6	Formic acid.

CAS No.[a]	Chemical
110–17–8	Fumaric acid.
98–01–1	Furfural.
56–81–5	Glycerol.
26545–73–7	Glycerol dichlorohydrin.
25791–96–2	Glycerol triether.
56–40–6	Glycine.
107–22–2	Glyoxal.
118–74–1	Hexachlorobenzene.
67–72–1	Hexachloroethane.
36653–82–4	Hexadecyl alcohol.
124–09–4	Hexamethylenediamine.
629–11–8	Hexamethylene glycol.
100–97–0	Hexamethylenetetramine.
74–90–8	Hydrogen cyanide.
123–31–9	Hydroquinone.
99–96–7	p-hydroxybenzoic acid.
26760–64–5	Isoamylene.
78–83–1	Isobutanol.
110–19–0	Isobutyl acetate.
115–11–7	Isobutylene.
78–84–2	Isobutyraldehyde.
79–31–2	Isobutyric acid.
25339–17–7	Isodecanol.
26952–21–6	Isooctyl alcohol.
78–78–4	Isopentane.
78–59–1	Isophorone.
121–91–5	Isophthalic acid.
78–79–5	Isoprene.
67–63–0	Isopropanol.
108–21–4	Isopropyl acetate.
75–31–0	Isopropylamine.
75–29–6	Isopropyl chloride.

CAS No.[a]	Chemical
25168–06–3	Isopropylphenol.
463–51–4	Ketene.
([b])	Linear alkyl sulfonate.
123–01–3	Linear alkylbenzene (linear dodecylbenzene).
110–16–7	Maleic acid.
108–31–6	Maleic anhydride.
6915–15–7	Malic acid.
141–79–7	Mesityl oxide.
121–47–1	Metanilic acid.
79–41–4	Methacrylic acid.
563–47–3	Methallyl chloride.
67–56–1	Methanol.
79–20–9	Methyl acetate.
105–45–3	Methyl acetoacetate.
74–89–5	Methylamine.
100–61–8	n-methylaniline.
74–83–9	Methyl bromide.
37365–71–2	Methyl butynol.
74–87–3	Methyl chloride.
108–87–2	Methylcyclohexane.
1331–22–2	Methylcyclohexanone.
75–09–2	Methylene chloride.
101–77–9	Methylene dianiline.
101–68–8	Methylene diphenyl diisocyanate.
78–93–3	Methyl ethyl ketone.
107–31–3	Methyl formate.
108–11–2	Methyl isobutyl carbinol.
108–10–1	Methyl isobutyl ketone.
80–62–6	Methyl methacrylate.
77–75–8	Methylpentynol.
98–83–9	a-methylstyrene.
110–91–8	Morpholine.

CAS No.[a]	Chemical
85–47–2	a-naphthalene sulfonic acid.
120–18–3	b-naphthalene sulfonic acid.
90–15–3	a-naphthol.
135–19–3	b-naphthol.
75–98–9	Neopentanoic acid.
88–74–4	o-nitroaniline.
100–01–6	p-nitroaniline.
91–23–6	o-nitroanisole.
100–17–4	p-nitroanisole.
98–95–3	Nitrobenzene.
27178–83–2[c]	Nitrobenzoic acid (o,m, and p).
79–24–3	Nitroethane.
75–52–5	Nitromethane.
88–75–5	2-Nitrophenol.
25322–01–4	Nitropropane.
1321–12–6	Nitrotoluene.
27215–95–8	Nonene.
25154–52–3	Nonylphenol.
27193–28–8	Octylphenol.
123–63–7	Paraldehyde.
115–77–5	Pentaerythritol.
109–66–0	n-pentane.
109–67–1	1-pentene
127–18–4	Perchloroethylene.
594–42–3	Perchloromethyl mercaptan.
94–70–2	o-phenetidine.
156–43–4	p-phenetidine.
108–95–2	Phenol.
98–67–9, 585–38–6, 609–46–1, 1333–39–7[c]	Phenolsulfonic acids.
91–40–7	Phenyl anthranilic acid.
([b])	Phenylenediamine.
75–44–5	Phosgene.

CAS No.[a]	Chemical
85–44–9	Phthalic anhydride.
85–41–6	Phthalimide.
108–99–6	b-picoline.
110–85–0	Piperazine.
9003–29–6, 25036–29–7[c]	Polybutenes.
25322–68–3	Polyethylene glycol.
25322–69–4	Polypropylene glycol.
123–38–6	Propionaldehyde.
79–09–4	Propionic acid.
71–23–8	n-propyl alcohol.
107–10–8	Propylamine.
540–54–5	Propyl chloride.
115–07–1	Propylene.
127–00–4	Propylene chlorohydrin.
78–87–5	Propylene dichloride.
57–55–6	Propylene glycol.
75–56–9	Propylene oxide.
110–86–1	Pyridine.
106–51–4	Quinone.
108–46–3	Resorcinol.
27138–57–4	Resorcylic acid.
69–72–7	Salicylic acid.
127–09–3	Sodium acetate.
532–32–1	Sodium benzoate.
9004–32–4	Sodium carboxymethyl cellulose.
3926–62–3	Sodium chloroacetate.
141–53–7	Sodium formate.
139–02–6	Sodium phenate.
110–44–1	Sorbic acid.
100–42–5	Styrene.
110–15–6	Succinic acid.
110–61–2	Succinonitrile.

CAS No.[a]	Chemical
121–57–3	Sulfanilic acid.
126–33–0	Sulfolane.
1401–55–4	Tannic acid.
100–21–0	Terephthalic acid.
79–34–5[c]	Tetrachloroethanes.
117–08–8	Tetrachlorophthalic anhydride.
78–00–2	Tetraethyl lead.
119–64–2	Tetrahydronaphthalene.
85–43–8	Tetrahydrophthalic anhydride.
75–74–1	Tetramethyl lead.
110–60–1	Tetramethylenediamine.
110–18–9	Tetramethylethylenediamine.
108–88–3	Toluene.
95–80–7	Toluene-2,4-diamine.
584–84–9	Toluene-2,4-diisocyanate.
26471–62–5	Toluene diisocyanates (mixture).
1333–07–9	Toluenesulfonamide.
104–15–4[c]	Toluenesulfonic acids.
98–59–9	Toluenesulfonyl chloride.
26915–12–8	Toluidines.
87–61–6, 108–70–3, 120–82–1[c]	Trichlorobenzenes.
71–55–6	1,1,1-trichloroethane.
79–00–5	1,1,2-trichloroethane.
79–01–6	Trichloroethylene.
75–69–4	Trichlorofluoromethane.
96–18–4	1,2,3-trichloropropane.
76–13–1	1,1,2-trichloro-1,2,2-trifluoroethane.
121–44–8	Triethylamine.
112–27–6	Triethylene glycol.
112–49–2	Triethylene glycol dimethyl ether.
7756–94–7	Triisobutylene.
75–50–3	Trimethylamine.

CAS No.[a]	Chemical
57–13–6	Urea.
108–05–4	Vinyl acetate.
75–01–4	Vinyl chloride.
75–35–4	Vinylidene chloride.
25013–15–4	Vinyl toluene.
1330–20–7	Xylenes (mixed).
95–47–6	o-xylene.
106–42–3	p-xylene.
1300–71–6	Xylenol.
1300–73–8	Xylidine.

[a]CAS numbers refer to the Chemical Abstracts Registry numbers assigned to specific chemicals, isomers, or mixtures of chemicals. Some isomers or mixtures that are covered by the standards do not have CAS numbers assigned to them. The standards apply to all of the chemicals listed, whether CAS numbers have been assigned or not.

[b]No CAS number(s) have been assigned to this chemical, its isomers, or mixtures containing these chemicals.

[c]CAS numbers for some of the isomers are listed; the standards apply to all of the isomers and mixtures, even if CAS numbers have not been assigned.

[48 FR 48335, Oct. 18, 1983, as amended at 65 FR 61763, Oct. 17, 2000]

ATTACHMENT C

Subpart FF—National Emission Standard for Benzene Waste Operations

PART 70 OPERATING PERMIT
OFFICE OF AIR QUALITY

INEOS USA LLC
2357 Standard Avenue
Whiting, Indiana 46394
089-25489-00046

Attachment C

Subpart FF—National Emission Standard for Benzene Waste Operations

Source: 55 FR 8346, Mar. 7, 1990, unless otherwise noted.

§ 61.340 Applicability.

(a) The provisions of this subpart apply to owners and operators of chemical manufacturing plants, coke by-product recovery plants, and petroleum refineries.

(b) The provisions of this subpart apply to owners and operators of hazardous waste treatment, storage, and disposal facilities that treat, store, or dispose of hazardous waste generated by any facility listed in paragraph (a) of this section. The waste streams at hazardous waste treatment, storage, and disposal facilities subject to the provisions of this subpart are the benzene-containing hazardous waste from any facility listed in paragraph (a) of this section. A hazardous waste treatment, storage, and disposal facility is a facility that must obtain a hazardous waste management permit under subtitle C of the Solid Waste Disposal Act.

(c) At each facility identified in paragraph (a) or (b) of this section, the following waste is exempt from the requirements of this subpart:

(1) Waste in the form of gases or vapors that is emitted from process fluids:

(2) Waste that is contained in a segregated stormwater sewer system.

(d) At each facility identified in paragraph (a) or (b) of this section, any gaseous stream from a waste management unit, treatment process, or wastewater treatment system routed to a fuel gas system, as defined in §61.341, is exempt from this subpart. No testing, monitoring, recordkeeping, or reporting is required under this subpart for any gaseous stream from a waste management unit, treatment process, or wastewater treatment unit routed to a fuel gas system.

[55 FR 8346, Mar. 7, 1990, as amended at 55 FR 37231, Sept. 10, 1990; 58 FR 3095, Jan. 7, 1993; 67 FR 68531, Nov. 12, 2002]

§ 61.341 Definitions.

Benzene concentration means the fraction by weight of benzene in a waste as determined in accordance with the procedures specified in §61.355 of this subpart.

Car-seal means a seal that is placed on a device that is used to change the position of a valve (e.g., from opened to closed) in such a way that the position of the valve cannot be changed without breaking the seal.

Chemical manufacturing plant means any facility engaged in the production of chemicals by chemical, thermal, physical, or biological processes for use as a product, co-product, by-product, or intermediate including but not limited to industrial organic chemicals, organic pesticide products, pharmaceutical preparations, paint and allied products, fertilizers, and agricultural chemicals. Examples of chemical manufacturing plants include facilities at which process units are operated to produce one or more of the following chemicals: benzenesulfonic acid, benzene, chlorobenzene, cumene, cyclohexane, ethylene, ethylbenzene, hydroquinone, linear alklylbenzene, nitrobenzene, resorcinol, sulfolane, or styrene.

Closed-vent system means a system that is not open to the atmosphere and is composed of piping, ductwork, connections, and, if necessary, flow inducing devices that transport gas or vapor from an emission source to a control device.

Coke by-product recovery plant means any facility designed and operated for the separation and

recovery of coal tar derivatives (by-products) evolved from coal during the coking process of a coke oven battery.

Container means any portable waste management unit in which a material is stored, transported, treated, or otherwise handled. Examples of containers are drums, barrels, tank trucks, barges, dumpsters, tank cars, dump trucks, and ships.

Control device means an enclosed combustion device, vapor recovery system, or flare.

Cover means a device or system which is placed on or over a waste placed in a waste management unit so that the entire waste surface area is enclosed and sealed to minimize air emissions. A cover may have openings necessary for operation, inspection, and maintenance of the waste management unit such as access hatches, sampling ports, and gauge wells provided that each opening is closed and sealed when not in use. Example of covers include a fixed roof installed on a tank, a lid installed on a container, and an air-supported enclosure installed over a waste management unit.

External floating roof means a pontoon-type or double-deck type cover with certain rim sealing mechanisms that rests on the liquid surface in a waste management unit with no fixed roof.

Facility means all process units and product tanks that generate waste within a stationary source, and all waste management units that are used for waste treatment, storage, or disposal within a stationary source.

Fixed roof means a cover that is mounted on a waste management unit in a stationary manner and that does not move with fluctuations in liquid level.

Floating roof means a cover with certain rim sealing mechanisms consisting of a double deck, pontoon single deck, internal floating cover or covered floating roof, which rests upon and is supported by the liquid being contained, and is equipped with a closure seal or seals to close the space between the roof edge and unit wall.

Flow indicator means a device which indicates whether gas flow is present in a line or vent system.

Fuel gas system means the offsite and onsite piping and control system that gathers gaseous streams generated by facility operations, may blend them with sources of gas, if available, and transports the blended gaseous fuel at suitable pressures for use as fuel in heaters, furnaces, boilers, incinerators, gas turbines, and other combustion devices located within or outside the facility. The fuel is piped directly to each individual combustion device, and the system typically operates at pressures over atmospheric.

Individual drain system means the system used to convey waste from a process unit, product storage tank, or waste management unit to a waste management unit. The term includes all process drains and common junction boxes, together with their associated sewer lines and other junction boxes, down to the receiving waste management unit.

Internal floating roof means a cover that rests or floats on the liquid surface inside a waste management unit that has a fixed roof.

Liquid-mounted seal means a foam or liquid-filled primary seal mounted in contact with the liquid between the waste management unit wall and the floating roof continuously around the circumference.

Loading means the introduction of waste into a waste management unit but not necessarily to complete capacity (also referred to as filling).

Maximum organic vapor pressure means the equilibrium partial pressure exerted by the waste at the temperature equal to the highest calendar-month average of the waste storage temperature for waste stored above or below the ambient temperature or at the local maximum monthly average temperature as reported by the National Weather Service for waste stored at the ambient temperature, as determined:

(1) In accordance with §60.17(c); or

(2) As obtained from standard reference texts; or

(3) In accordance with §60.17(a)(37); or

(4) Any other method approved by the Administrator.

No detectable emissions means less than 500 parts per million by volume (ppmv) above background levels, as measured by a detection instrument reading in accordance with the procedures specified in §61.355(h) of this subpart.

Oil-water separator means a waste management unit, generally a tank or surface impoundment, used to separate oil from water. An oil-water separator consists of not only the separation unit but also the forebay and other separator basins, skimmers, weirs, grit chambers, sludge hoppers, and bar screens that are located directly after the individual drain system and prior to additional treatment units such as an air flotation unit, clarifier, or biological treatment unit. Examples of an oil-water separator incude an API separator, parallel-plate interceptor, and corrugated-plate interceptor with the associated ancillary equipment.

Petroleum refinery means any facility engaged in producing gasoline, kerosene, distillate fuel oils, residual fuel oils, lubricants, or other products through the distillation of petroleum, or through the redistillation, cracking, or reforming of unfinished petroleum derivatives.

Petroleum means the crude oil removed from the earth and the oils derived from tar sands, shale, and coal.

Point of waste generation means the location where the waste stream exits the process unit component or storage tank prior to handling or treatment in an operation that is not an integral part of the production process, or in the case of waste management units that generate new wastes after treatment, the location where the waste stream exits the waste management unit component.

Process unit means equipment assembled and connected by pipes or ducts to produce intermediate or final products. A process unit can be operated independently if supplied with sufficient fuel or raw materials and sufficient product storage facilities.

Process unit turnaround means the shutting down of the operations of a process unit, the purging of the contents of the process unit, the maintenance or repair work, followed by restarting of the process.

Process unit turnaround waste means a waste that is generated as a result of a process unit turnaround.

Process wastewater means water which comes in contact with benzene during manufacturing or processing operations conducted within a process unit. Process wastewater is not organic wastes, process fluids, product tank drawdown, cooling tower blowdown, steam trap condensate, or landfill leachate.

Process wastewater stream means a waste stream that contains only process wastewater.

Product tank means a stationary unit that is designed to contain an accumulation of materials that

are fed to or produced by a process unit, and is constructed primarily of non-earthen materials (e.g., wood, concrete, steel, plastic) which provide structural support.

Product tank drawdown means any material or mixture of materials discharged from a product tank for the purpose of removing water or other contaminants from the product tank.

Safety device means a closure device such as a pressure relief valve, frangible disc, fusible plug, or any other type of device which functions exclusively to prevent physical damage or permanent deformation to a unit or its air emission control equipment by venting gases or vapors directly to the atmosphere during unsafe conditions resulting from an unplanned, accidental, or emergency event. For the purpose of this subpart, a safety device is not used for routine venting of gases or vapors from the vapor headspace underneath a cover such as during filling of the unit or to adjust the pressure in this vapor headspace in response to normal daily diurnal ambient temperature fluctuations. A safety device is designed to remain in a closed position during normal operations and open only when the internal pressure, or another relevant parameter, exceeds the device threshold setting applicable to the air emission control equipment as determined by the owner or operator based on manufacturer recommendations, applicable regulations, fire protection and prevention codes, standard engineering codes and practices, or other requirements for the safe handling of flammable, ignitable, explosive, reactive, or hazardous materials.

Segregated stormwater sewer system means a drain and collection system designed and operated for the sole purpose of collecting rainfall runoff at a facility, and which is segregated from all other individual drain systems.

Sewer line means a lateral, trunk line, branch line, or other enclosed conduit used to convey waste to a downstream waste management unit.

Slop oil means the floating oil and solids that accumulate on the surface of an oil-water separator.

Sour water stream means a stream that:

(1) Contains ammonia or sulfur compounds (usually hydrogen sulfide) at concentrations of 10 ppm by weight or more;

(2) Is generated from separation of water from a feed stock, intermediate, or product that contained ammonia or sulfur compounds; and

(3) Requires treatment to remove the ammonia or sulfur compounds.

Sour water stripper means a unit that:

(1) Is designed and operated to remove ammonia or sulfur compounds (usually hydrogen sulfide) from sour water streams;

(2) Has the sour water streams transferred to the stripper through hard piping or other enclosed system; and

(3) Is operated in such a manner that the offgases are sent to a sulfur recovery unit, processing unit, incinerator, flare, or other combustion device.

Surface impoundment means a waste management unit which is a natural topographic depression, man-made excavation, or diked area formed primarily of earthen materials (although it may be lined with man-made materials), which is designed to hold an accumulation of liquid wastes or waste containing free liquids, and which is not an injection well. Examples of surface impoundments are holding, storage, settling, and aeration pits, ponds, and lagoons.

Tank means a stationary waste management unit that is designed to contain an accumulation of waste and is constructed primarily of nonearthen materials (e.g., wood, concrete, steel, plastic)

which provide structural support.

Treatment process means a stream stripping unit, thin-film evaporation unit, waste incinerator, or any other process used to comply with §61.348 of this subpart.

Vapor-mounted seal means a foam-filled primary seal mounted continuously around the perimeter of a waste management unit so there is an annular vapor space underneath the seal. The annular vapor space is bounded by the bottom of the primary seal, the unit wall, the liquid surface, and the floating roof.

Waste means any material resulting from industrial, commercial, mining or agricultural operations, or from community activities that is discarded or is being accumulated, stored, or physically, chemically, thermally, or biologically treated prior to being discarded, recycled, or discharged.

Waste management unit means a piece of equipment, structure, or transport mechanism used in handling, storage, treatment, or disposal of waste. Examples of a waste management unit include a tank, surface impoundment, container, oil-water separator, individual drain system, steam stripping unit, thin-film evaporation unit, waste incinerator, and landfill.

Waste stream means the waste generated by a particular process unit, product tank, or waste management unit. The characteristics of the waste stream (e.g., flow rate, benzene concentration, water content) are determined at the point of waste generation. Examples of a waste stream include process wastewater, product tank drawdown, sludge and slop oil removed from waste management units, and landfill leachate.

Wastewater treatment system means any component, piece of equipment, or installation that receives, manages, or treats process wastewater, product tank drawdown, or landfill leachate prior to direct or indirect discharge in accordance with the National Pollutant Discharge Elimination System permit regulations under 40 CFR part 122. These systems typically include individual drain systems, oil-water separators, air flotation units, equalization tanks, and biological treatment units.

Water seal controls means a seal pot, p-leg trap, or other type of trap filled with water (e.g., flooded sewers that maintain water levels adequate to prevent air flow through the system) that creates a water barrier between the sewer line and the atmosphere. The water level of the seal must be maintained in the vertical leg of a drain in order to be considered a water seal.

[55 FR 8346, Mar. 7, 1990; 55 FR 12444, Apr. 3, 1990, as amended at 58 FR 3095, Jan. 7, 1993; 67 FR 68531, Nov. 12, 2002]

§ 61.342 Standards: General.

(a) An owner or operator of a facility at which the total annual benzene quantity from facility waste is less than 10 megagrams per year (Mg/yr) (11 ton/yr) shall be exempt from the requirements of paragraphs (b) and (c) of this section. The total annual benzene quantity from facility waste is the sum of the annual benzene quantity for each waste stream at the facility that has a flow-weighted annual average water content greater than 10 percent or that is mixed with water, or other wastes, at any time and the mixture has an annual average water content greater than 10 percent. The benzene quantity in a waste stream is to be counted only once without multiple counting if other waste streams are mixed with or generated from the original waste stream. Other specific requirements for calculating the total annual benzene waste quantity are as follows:

(1) Wastes that are exempted from control under §§61.342(c)(2) and 61.342(c)(3) are included in the calculation of the total annual benzene quantity if they have an annual average water content greater than 10 percent, or if they are mixed with water or other wastes at any time and the mixture has an annual average water content greater than 10 percent.

(2) The benzene in a material subject to this subpart that is sold is included in the calculation of the total annual benzene quantity if the material has an annual average water content greater than 10 percent.

(3) Benzene in wastes generated by remediation activities conducted at the facility, such as the excavation of contaminated soil, pumping and treatment of groundwater, and the recovery of product from soil or groundwater, are not included in the calculation of total annual benzene quantity for that facility. If the facility's total annual benzene quantity is 10 Mg/yr (11 ton/yr) or more, wastes generated by remediation activities are subject to the requirements of paragraphs (c) through (h) of this section. If the facility is managing remediation waste generated offsite, the benzene in this waste shall be included in the calculation of total annual benzene quantity in facility waste, if the waste streams have an annual average water content greater than 10 percent, or if they are mixed with water or other wastes at any time and the mixture has an annual average water content greater than 10 percent.

(4) The total annual benzene quantity is determined based upon the quantity of benzene in the waste before any waste treatment occurs to remove the benzene except as specified in §61.355(c)(1)(i) (A) through (C).

(b) Each owner or operator of a facility at which the total annual benzene quantity from facility waste is equal to or greater than 10 Mg/yr (11 ton/yr) as determined in paragraph (a) of this section shall be in compliance with the requirements of paragraphs (c) through (h) of this section no later than 90 days following the effective date, unless a waiver of compliance has been obtained under §61.11, or by the initial startup for a new source with an initial startup after the effective date.

(1) The owner or operator of an existing source unable to comply with the rule within the required time may request a waiver of compliance under §61.10.

(2) As part of the waiver application, the owner or operator shall submit to the Administrator a plan under §61.10(b)(3) that is an enforceable commitment to obtain environmental benefits to mitigate the benzene emissions that result from extending the compliance date. The plan shall include the following information:

(i) A description of the method of compliance, including the control approach, schedule for installing controls, and quantity of the benzene emissions that result from extending the compliance date;

(ii) If the control approach involves a compliance strategy designed to obtain integrated compliance with multiple regulatory requirements, a description of the other regulations involved and their effective dates; and

(iii) A description of the actions to be taken at the facility to obtain mitigating environmental benefits, including how the benefits will be obtained, the schedule for these actions, and an estimate of the quantifiable benefits that directly result from these actions.

(c) Each owner or operator of a facility at which the total annual benzene quantity from facility waste is equal to or greater than 10 Mg/yr (11 ton/yr) as determined in paragraph (a) of this section shall manage and treat the facility waste as follows:

(1) For each waste stream that contains benzene, including (but not limited to) organic waste streams that contain less than 10 percent water and aqueous waste streams, even if the wastes are not discharged to an individual drain system, the owner or operator shall:

(i) Remove or destroy the benzene contained in the waste using a treatment process or wastewater treatment system that complies with the standards specified in §61.348 of this subpart.

(ii) Comply with the standards specified in §§61.343 through 61.347 of this subpart for each waste management unit that receives or manages the waste stream prior to and during treatment of the waste stream in accordance with paragraph (c)(1)(i) of this section.

(iii) Each waste management unit used to manage or treat waste streams that will be recycled to a process shall comply with the standards specified in §§61.343 through 61.347. Once the waste stream is recycled to a process, including to a tank used for the storage of production process feed, product, or product intermediates, unless this tank is used primarily for the storage of wastes, the material is no longer subject to paragraph (c) of this section.

(2) A waste stream is exempt from paragraph (c)(1) of this section provided that the owner or operator demonstrates initially and, thereafter, at least once per year that the flow-weighted annual average benzene concentration for the waste stream is less than 10 ppmw as determined by the procedures specified in §61.355(c)(2) or §61.355(c)(3).

(3) A waste stream is exempt from paragraph (c)(1) of this section provided that the owner or operator demonstrates initially and, thereafter, at least once per year that the conditions specified in either paragraph (c)(3)(i) or (c)(3)(ii) of this section are met.

(i) The waste stream is process wastewater that has a flow rate less than 0.02 liters per minute (0.005 gallons per minute) or an annual wastewater quantity of less than 10 Mg/yr (11 ton/yr); or

(ii) All of the following conditions are met:

(A) The owner or operator does not choose to exempt process wastewater under paragraph (c)(3)(i) of this section,

(B) The total annual benzene quantity in all waste streams chosen for exemption in paragraph (c)(3)(ii) of this section does not exceed 2.0 Mg/yr (2.2 ton/yr) as determined in the procedures in §61.355(j), and

(C) The total annual benzene quantity in a waste stream chosen for exemption, including process unit turnaround waste, is determined for the year in which the waste is generated.

(d) As an alternative to the requirements specified in paragraphs (c) and (e) of this section, an owner or operator of a facility at which the total annual benzene quantity from facility waste is equal to or greater than 10 Mg/yr (11 ton/yr) as determined in paragraph (a) of this section may elect to manage and treat the facility waste as follows:

(1) The owner or operator shall manage and treat facility waste other than process wastewater in accordance with the requirements of paragraph (c)(1) of this section.

(2) The owner or operator shall manage and treat process wastewater in accordance with the following requirements:

(i) Process wastewater shall be treated to achieve a total annual benzene quantity from facility process wastewater less than 1 Mg/yr (1.1 ton/yr). Total annual benzene from facility process wastewater shall be determined by adding together the annual benzene quantity at the point of waste generation for each untreated process wastewater stream plus the annual benzene quantity exiting the treatment process for each process wastewater stream treated in accordance with the requirements of paragraph (c)(1)(i) of this section.

(ii) Each treated process wastewater stream identified in paragraph (d)(2)(i) of this section shall be managed and treated in accordance with paragraph (c)(1) of this section.

(iii) Each untreated process wastewater stream identified in paragraph (d)(2)(i) of this section is exempt from the requirements of paragraph (c)(1) of this section.

(e) As an alternative to the requirements specified in paragraphs (c) and (d) of this section, an owner or operator of a facility at which the total annual benzene quantity from facility waste is equal to or greater than 10 Mg/yr (11 ton/yr) as determined in paragraph (a) of this section may elect to manage and treat the facility waste as follows:

(1) The owner or operator shall manage and treat facility waste with a flow-weighted annual average water content of less than 10 percent in accordance with the requirements of paragraph (c)(1) of this section; and

(2) The owner or operator shall manage and treat facility waste (including remediation and process unit turnaround waste) with a flow-weighted annual average water content of 10 percent or greater, on a volume basis as total water, and each waste stream that is mixed with water or wastes at any time such that the resulting mixture has an annual water content greater than 10 percent, in accordance with the following:

(i) The benzene quantity for the wastes described in paragraph (e)(2) of this section must be equal to or less than 6.0 Mg/yr (6.6 ton/yr), as determined in §61.355(k). Wastes as described in paragraph (e)(2) of this section that are transferred offsite shall be included in the determination of benzene quantity as provided in §61.355(k). The provisions of paragraph (f) of this section shall not apply to any owner or operator who elects to comply with the provisions of paragraph (e) of this section.

(ii) The determination of benzene quantity for each waste stream defined in paragraph (e)(2) of this section shall be made in accordance with §61.355(k).

(f) Rather than treating the waste onsite, an owner or operator may elect to comply with paragraph (c)(1)(i) of this section by transferring the waste offsite to another facility where the waste is treated in accordance with the requirements of paragraph (c)(1)(i) of this section. The owner or operator transferring the waste shall:

(1) Comply with the standards specified in §§61.343 through 61.347 of this subpart for each waste management unit that receives or manages the waste prior to shipment of the waste offsite.

(2) Include with each offsite waste shipment a notice stating that the waste contains benzene which is required to be managed and treated in accordance with the provisions of this subpart.

(g) Compliance with this subpart will be determined by review of facility records and results from tests and inspections using methods and procedures specified in §61.355 of this subpart.

(h) Permission to use an alternative means of compliance to meet the requirements of §§61.342 through 61.352 of this subpart may be granted by the Administrator as provided in §61.353 of this subpart.

[55 FR 8346, Mar. 7, 1990, as amended at 58 FR 3095, Jan. 7, 1993; 65 FR 62159, 62160, Oct. 17, 2000]

§ 61.343 Standards: Tanks.

(a) Except as provided in paragraph (b) of this section and in §61.351, the owner or operator must meet the standards in paragraph (a)(1) or (2) of this section for each tank in which the waste stream is placed in accordance with §61.342 (c)(1)(ii). The standards in this section apply to the treatment and storage of the waste stream in a tank, including dewatering.

(1) The owner or operator shall install, operate, and maintain a fixed-roof and closed-vent system that routes all organic vapors vented from the tank to a control device.

(i) The fixed-roof shall meet the following requirements:

(A) The cover and all openings (e.g., access hatches, sampling ports, and gauge wells) shall be designed to operate with no detectable emissions as indicated by an instrument reading of less than 500 ppmv above background, as determined initially and thereafter at least once per year by the methods specified in §61.355(h) of this subpart.

(B) Each opening shall be maintained in a closed, sealed position (e.g., covered by a lid that is gasketed and latched) at all times that waste is in the tank except when it is necessary to use the opening for waste sampling or removal, or for equipment inspection, maintenance, or repair.

(C) If the cover and closed-vent system operate such that the tank is maintained at a pressure less than atmospheric pressure, then paragraph (a)(1)(i)(B) of this section does not apply to any opening that meets all of thefollowing conditions:

(*1*) The purpose of the opening is to provide dilution air to reduce the explosion hazard;

(*2*) The opening is designed to operate with no detectable emissions as indicated by an instrument reading of less than 500 ppmv above background, as determined initially and thereafter at least once per year by the methods specified in §61.355(h); and

(*3*) The pressure is monitored continuously to ensure that the pressure in the tank remains below atmospheric pressure.

(ii) The closed-vent system and control device shall be designed and operated in accordance with the requirements of §61.349 of this subpart.

(2) The owner or operator must install, operate, and maintain an enclosure and closed-vent system that routes all organic vapors vented from the tank, located inside the enclosure, to a control device in accordance with the requirements specified in paragraph (e) of this section.

(b) For a tank that meets all the conditions specified in paragraph (b)(1) of this section, the owner or operator may elect to comply with paragraph (b)(2) of this section as an alternative to the requirements specified in paragraph (a)(1) of this section.

(1) The waste managed in the tank complying with paragraph (b)(2) of this section shall meet all of the following conditions:

(i) Each waste stream managed in the tank must have a flow-weighted annual average water content less than or equal to 10 percent water, on a volume basis as total water.

(ii) The waste managed in the tank either:

(A) Has a maximum organic vapor pressure less than 5.2 kilopascals (kPa) (0.75 pounds per square inch (psi));

(B) Has a maximum organic vapor pressure less than 27.6 kPa (4.0 psi) and is managed in a tank having design capacity less than 151 m^3 (40,000 gal); or

(C) Has a maximum organic vapor pressure less than 76.6 kPa (11.1 psi) and is managed in a tank having a design capacity less than 75 m^3 (20,000 gal).

(2) The owner or operator shall install, operate, and maintain a fixed roof as specified in paragraph (a)(1)(i).

(3) For each tank complying with paragraph (b) of this section, one or more devices which vent directly to the atmosphere may be used on the tank provided each device remains in a closed, sealed position during normal operations except when the device needs to open to prevent

physical damage or permanent deformation of the tank or cover resulting from filling or emptying the tank, diurnal temperature changes, atmospheric pressure changes or malfunction of the unit in accordance with good engineering and safety practices for handling flammable, explosive, or other hazardous materials.

(c) Each fixed-roof, seal, access door, and all other openings shall be checked by visual inspection initially and quarterly thereafter to ensure that no cracks or gaps occur and that access doors and other openings are closed and gasketed properly.

(d) Except as provided in §61.350 of this subpart, when a broken seal or gasket or other problem is identified, or when detectable emissions are measured, first efforts at repair shall be made as soon as practicable, but not later than 45 calendar days after identification.

(e) Each owner or operator who controls air pollutant emissions by using an enclosure vented through a closed-vent system to a control device must meet the requirements specified in paragraphs (e)(1) through (4) of this section.

(1) The tank must be located inside a total enclosure. The enclosure must be designed and operated in accordance with the criteria for a permanent total enclosure as specified in "Procedure T—Criteria for and Verification of a Permanent or Temporary Total Enclosure" in 40 CFR 52.741, appendix B. The enclosure may have permanent or temporary openings to allow worker access; passage of material into or out of the enclosure by conveyor, vehicles, or other mechanical means; entry of permanent mechanical or electrical equipment; or direct airflow into the enclosure. The owner or operator must perform the verification procedure for the enclosure as specified in section 5.0 of Procedure T initially when the enclosure is first installed and, thereafter, annually. A facility that has conducted an initial compliance demonstration and that performs annual compliance demonstrations in accordance with the requirements for Tank Level 2 control requirements 40 CFR 264.1084(i) or 40 CFR 265(i) is not required to make repeat demonstrations of initial and continuous compliance for the purposes of this subpart.

(2) The enclosure must be vented through a closed-vent system to a control device that is designed and operated in accordance with the standards for control devices specified in §61.349.

(3) Safety devices, as defined in this subpart, may be installed and operated as necessary on any enclosure, closed-vent system, or control device used to comply with the requirements of paragraphs (e)(1) and (2) of this section.

(4) The closed-vent system must be designed and operated in accordance with the requirements of §61.349.

[55 FR 8346, Mar. 7, 1990, as amended at 55 FR 18331, May 2, 1990; 58 FR 3096, Jan. 7, 1993; 67 FR 68532, Nov. 12, 2002; 68 FR 6082, Feb. 6, 2003; 68 FR 67935, Dec. 4, 2003]

§ 61.344 Standards: Surface impoundments.

(a) The owner or operator shall meet the following standards for each surface impoundment in which waste is placed in accordance with §61.342(c)(1)(ii) of this subpart:

(1) The owner or operator shall install, operate, and maintain on each surface impoundment a cover (e.g., air-supported structure or rigid cover) and closed-vent system that routes all organic vapors vented from the surface impoundment to a control device.

(i) The cover shall meet the following requirements:

(A) The cover and all openings (e.g., access hatches, sampling ports, and gauge wells) shall be designed to operate with no detectable emissions as indicated by an instrument reading of less than 500 ppmv above background, initially and thereafter at least once per year by the methods

specified in §61.355(h) of this subpart.

(B) Each opening shall be maintained in a closed, sealed position (e.g., covered by a lid that is gasketed and latched) at all times that waste is in the surface impoundment except when it is necessary to use the opening for waste sampling or removal, or for equipment inspection, maintenance, or repair.

(C) If the cover and closed-vent system operate such that the enclosure of the surface impoundment is maintained at a pressure less than atmospheric pressure, then paragraph (a)(1)(i)(B) of this section does not apply to any opening that meets all of the following conditions:

(*1*) The purpose of the opening is to provide dilution air to reduce the explosion hazard;

(*2*) The opening is designed to operate with no detectable emissions as indicated by an instrument reading of less than 500 ppmv above background, as determined initially and thereafter at least once per year by the methods specified in §61.355(h) of this subpart; and

(*3*) The pressure is monitored continuously to ensure that the pressure in the enclosure of the surface impoundment remains below atmospheric pressure.

(D) The cover shall be used at all times that waste is placed in the surface impoundment except during removal of treatment residuals in accordance with 40 CFR 268.4 or closure of the surface impoundment in accordance with 40 CFR 264.228. (Note: the treatment residuals generated by these activities may be subject to the requirements of this part.)

(ii) The closed-vent system and control device shall be designed and operated in accordance with §61.349 of this subpart.

(b) Each cover seal, access hatch, and all other openings shall be checked by visual inspection initially and quarterly thereafter to ensure that no cracks or gaps occur and that access hatches and other openings are closed and gasketed properly.

(c) Except as provided in §61.350 of this subpart, when a broken seal or gasket or other problem is identified, or when detectable emissions are measured, first efforts at repair shall be made as soon as practicable, but not later than 15 calendar days after identification.

[55 FR 8346, Mar. 7, 1990, as amended at 58 FR 3097, Jan. 7, 1993]

§ 61.345 Standards: Containers.

(a) The owner or operator shall meet the following standards for each container in which waste is placed in accordance with §61.342(c)(1)(ii) of this subpart:

(1) The owner or operator shall install, operate, and maintain a cover on each container used to handle, transfer, or store waste in accordance with the following requirements:

(i) The cover and all openings (e.g., bungs, hatches, and sampling ports) shall be designed to operate with no detectable emissions as indicated by an instrument reading of less than 500 ppmv above background, initially and thereafter at least once per year by the methods specified in §61.355(h) of this subpart.

(ii) Except as provided in paragraph (a)(4) of this section, each opening shall be maintained in a closed, sealed position (e.g., covered by a lid that is gasketed and latched) at all times that waste is in the container except when it is necessary to use the opening for waste loading, removal, inspection, or sampling.

(2) When a waste is transferred into a container by pumping, the owner or operator shall perform the transfer using a submerged fill pipe. The submerged fill pipe outlet shall extend to within two

fill pipe diameters of the bottom of the container while the container is being loaded. During loading of the waste, the cover shall remain in place and all openings shall be maintained in a closed, sealed position except for those openings required for the submerged fill pipe, those openings required for venting of the container to prevent physical damage or permanent deformation of the container or cover, and any openings complying with paragraph (a)(4) of this section.

(3) Treatment of a waste in a container, including aeration, thermal or other treatment, must be performed by the owner or operator in a manner such that while the waste is being treated the container meets the standards specified in paragraphs (a)(3)(i) through (iii) of this section, except for covers and closed-vent systems that meet the requirements in paragraph (a)(4) of this section.

(i) The owner or operator must either:

(A) Vent the container inside a total enclosure which is exhausted through a closed-vent system to a control device in accordance with the requirements of paragraphs (a)(3)(ii)(A) and (B) of this section; or

(B) Vent the covered or closed container directly through a closed-vent system to a control device in accordance with the requirements of paragraphs (a)(3)(ii)(B) and (C) of this section.

(ii) The owner or operator must meet the following requirements, as applicable to the type of air emission control equipment selected by the owner or operator:

(A) The total enclosure must be designed and operated in accordance with the criteria for a permanent total enclosure as specified in section 5 of the “Procedure T—Criteria for and Verification of a Permanent or Temporary Total Enclosure” in 40 CFR 52.741, appendix B. The enclosure may have permanent or temporary openings to allow worker access; passage of containers through the enclosure by conveyor or other mechanical means; entry of permanent mechanical or electrical equipment; or direct airflow into the enclosure. The owner or operator must perform the verification procedure for the enclosure as specified in section 5.0 of “Procedure T—Criteria for and Verification of a Permanent or Temporary Total Enclosure” initially when the enclosure is first installed and, thereafter, annually. A facility that has conducted an initial compliance demonstration and that performs annual compliance demonstrations in accordance with the Container Level 3 control requirements in 40 CFR 264.1086(e)(2)(i) or 40 CFR 265.1086(e)(2)(i) is not required to make repeat demonstrations of initial and continuous compliance for the purposes of this subpart.

(B) The closed-vent system and control device must be designed and operated in accordance with the requirements of §61.349.

(C) For a container cover, the cover and all openings (*e.g.,* doors, hatches) must be designed to operate with no detectable emissions as indicated by an instrument reading of less than 500 ppmv above background, initially and thereafter at least once per year by the methods specified in §61.355(h).

(iii) Safety devices, as defined in this subpart, may be installed and operated as necessary on any container, enclosure, closed-vent system, or control device used to comply with the requirements of paragraph (a)(3)(i) of this section.

(4) If the cover and closed-vent system operate such that the container is maintained at a pressure less than atmospheric pressure, the owner or operator may operate the system with an opening that is not sealed and kept closed at all times if the following conditions are met:

(i) The purpose of the opening is to provide dilution air to reduce the explosion hazard;

(ii) The opening is designed to operate with no detectable emissions as indicated by an

instrument reading of less than 500 ppmv above background, as determined initially and thereafter at least once per year by methods specified in §61.355(h); and

(iii) The pressure is monitored continuously to ensure that the pressure in the container remains below atmospheric pressure.

(b) Each cover and all openings shall be visually inspected initially and quarterly thereafter to ensure that they are closed and gasketed properly.

(c) Except as provided in §61.350 of this subpart, when a broken seal or gasket or other problem is identified, first efforts at repair shall be made as soon as practicable, but not later than 15 calendar days after identification.

[55 FR 8346, Mar. 7, 1990, as amended at 58 FR 3097, Jan. 7, 1993; 67 FR 68532, Nov. 12, 2002; 68 FR 67936, Dec. 4, 2003]

§ 61.346 Standards: Individual drain systems.

(a) Except as provided in paragraph (b) of this section, the owner or operator shall meet the following standards for each individual drain system in which waste is placed in accordance with §61.342(c)(1)(ii) of this subpart:

(1) The owner or operator shall install, operate, and maintain on each drain system opening a cover and closed-vent system that routes all organic vapors vented from the drain system to a control device.

(i) The cover shall meet the following requirements:

(A) The cover and all openings (e.g., access hatches, sampling ports) shall be designed to operate with no detactable emissions as indicated by an instrument reading of less than 500 ppmv above background, initially and thereafter at least once per year by the methods specified in §61.355(h) of this subpart.

(B) Each opening shall be maintained in a closed, sealed position (e.g., covered by a lid that is gasketed and latched) at all times that waste is in the drain system except when it is necessary to use the opening for waste sampling or removal, or for equipment inspection, maintenance, or repair.

(C) If the cover and closed-vent system operate such that the individual drain system is maintained at a pressure less than atmospheric pressure, then paragraph (a)(1)(i)(B) of this section does not apply to any opening that meets all of the following conditions:

(*1*) The purpose of the opening is to provide dilution air to reduce the explosion hazard;

(*2*) The opening is designed to operate with no detectable emissions as indicated by an instrument reading of less than 500 ppmv above background, as determined initially and thereafter at least once per year by the methods specified in §61.355(h); and

(*3*) The pressure is monitored continuously to ensure that the pressure in the individual drain system remains below atmospheric pressure.

(ii) The closed-vent system and control device shall be designed and operated in accordance with §61.349 of this subpart.

(2) Each cover seal, access hatch, and all other openings shall be checked by visual inspection initially and quarterly thereafter to ensure that no cracks or gaps occur and that access hatches and other openings are closed and gasketed properly.

(3) Except as provided in §61.350 of this subpart, when a broken seal or gasket or other problem is identified, or when detectable emissions are measured, first efforts at repair shall be made as soon as practicable, but not later than 15 calendar days after identification.

(b) As an alternative to complying with paragraph (a) of this section, an owner or operator may elect to comply with the following requirements:

(1) Each drain shall be equipped with water seal controls or a tightly sealed cap or plug.

(2) Each junction box shall be equipped with a cover and may have a vent pipe. The vent pipe shall be at least 90 cm (3 ft) in length and shall not exceed 10.2 cm (4 in) in diameter.

(i) Junction box covers shall have a tight seal around the edge and shall be kept in place at all times, except during inspection and maintenance.

(ii) One of the following methods shall be used to control emissions from the junction box vent pipe to the atmosphere:

(A) Equip the junction box with a system to prevent the flow of organic vapors from the junction box vent pipe to the atmosphere during normal operation. An example of such a system includes use of water seal controls on the junction box. A flow indicator shall be installed, operated, and maintained on each junction box vent pipe to ensure that organic vapors are not vented from the junction box to the atmosphere during normal operation.

(B) Connect the junction box vent pipe to a closed-vent system and control device in accordance with §61.349 of this subpart.

(3) Each sewer line shall not be open to the atmosphere and shall be covered or enclosed in a manner so as to have no visual gaps or cracks in joints, seals, or other emission interfaces.

(4) Equipment installed in accordance with paragraphs (b)(1), (b)(2), or (b)(3) of this section shall be inspected as follows:

(i) Each drain using water seal controls shall be checked by visual or physical inspection initially and thereafter quarterly for indications of low water levels or other conditions that would reduce the effectiveness of water seal controls.

(ii) Each drain using a tightly sealed cap or plug shall be visually inspected initially and thereafter quarterly to ensure caps or plugs are in place and properly installed.

(iii) Each junction box shall be visually inspected initially and thereafter quarterly to ensure that the cover is in place and to ensure that the cover has a tight seal around the edge.

(iv) The unburied portion of each sewer line shall be visually inspected initially and thereafter quarterly for indication of cracks, gaps, or other problems that could result in benzene emissions.

(5) Except as provided in §61.350 of this subpart, when a broken seal, gap, crack or other problem is identified, first efforts at repair shall be made as soon as practicable, but not later than 15 calendar days after identification.

[55 FR 8346, Mar. 7, 1990, as amended at 55 FR 37231, Sept. 10, 1990; 58 FR 3097, Jan. 7, 1993]

§ 61.347 Standards: Oil-water separators.

(a) Except as provided in §61.352 of this subpart, the owner or operator shall meet the following standards for each oil-water separator in which waste is placed in accordance with §61.342(c)(1)(ii) of this subpart:

(1) The owner or operator shall install, operate, and maintain a fixed-roof and closed-vent system that routes all organic vapors vented from the oil-water separator to a control device.

(i) The fixed-roof shall meet the following requirements:

(A) The cover and all openings (e.g., access hatches, sampling ports, and gauge wells) shall be designed to operate with no detectable emissions as indicated by an instrument reading of less than 500 ppmv above background, as determined initially and thereafter at least once per year by the methods specified in §61.355(h) of this subpart.

(B) Each opening shall be maintained in a closed, sealed position (e.g., covered by a lid that is gasketed and latched) at all times that waste is in the oil-water separator except when it is necessary to use the opening for waste sampling or removal, or for equipment inspection, maintenance, or repair.

(C) If the cover and closed-vent system operate such that the oil-water separator is maintained at a pressure less than atmospheric pressure, then paragraph (a)(1)(i)(B) of this section does not apply to any opening that meets all of the following conditions:

(*1*) The purpose of the opening is to provide dilution air to reduce the explosion hazard;

(*2*) The opening is designed to operate with no detectable emissions as indicated by an instrument reading of less than 500 ppmv above background, as determined initially and thereafter at least once per year by the methods specified in §61.355(h); and

(*3*) The pressure is monitored continuously to ensure that the pressure in the oil-water separator remains below atmospheric pressure.

(ii) The closed-vent system and control device shall be designed and operated in accordance with the requirements of §61.349 of this subpart.

(b) Each cover seal, access hatch, and all other openings shall be checked by visual inspection initially and quarterly thereafter to ensure that no cracks or gaps occur between the cover and oil-water separator wall and that access hatches and other openings are closed and gasketed properly.

(c) Except as provided in §61.350 of this subpart, when a broken seal or gasket or other problem is identified, or when detectable emissions are measured, first efforts at repair shall be made as soon as practicable, but not later than 15 calendar days after identification.

[55 FR 8346, Mar. 7, 1990, as amended at 58 FR 3098, Jan. 7, 1993]

§ 61.348 Standards: Treatment processes.

(a) Except as provided in paragraph (a)(5) of this section, the owner or operator shall treat the waste stream in accordance with the following requirements:

(1) The owner or operator shall design, install, operate, and maintain a treatment process that either:

(i) Removes benzene from the waste stream to a level less than 10 parts per million by weight (ppmw) on a flow-weighted annual average basis,

(ii) Removes benzene from the waste stream by 99 percent or more on a mass basis, or

(iii) Destroys benzene in the waste stream by incinerating the waste in a combustion unit that achieves a destruction efficiency of 99 percent or greater for benzene.

(2) Each treatment process complying with paragraphs (a)(1)(i) or (a)(1)(ii) of this section shall be designed and operated in accordance with the appropriate waste management unit standards specified in §§61.343 through 61.347 of this subpart. For example, if a treatment process is a tank, then the owner or operator shall comply with §61.343 of this subpart.

(3) For the purpose of complying with the requirements specified in paragraph (a)(1)(i) of this section, the intentional or unintentional reduction in the benzene concentration of a waste stream by dilution of the waste stream with other wastes or materials is not allowed.

(4) An owner or operator may aggregate or mix together individual waste streams to create a combined waste stream for the purpose of facilitating treatment of waste to comply with the requirements of paragraph (a)(1) of this section except as provided in paragraph (a)(5) of this section.

(5) If an owner or operator aggregates or mixes any combination of process wastewater, product tank drawdown, or landfill leachate subject to §61.342(c)(1) of this subpart together with other waste streams to create a combined waste stream for the purpose of facilitating management or treatment of waste in a wastewater treatment system, then the wastewater treatment system shall be operated in accordance with paragraph (b) of this section. These provisions apply to above-ground wastewater treatment systems as well as those that are at or below ground level.

(b) Except for facilities complying with §61.342(e), the owner or operator that aggregates or mixes individual waste streams as defined in paragraph (a)(5) of this section for management and treatment in a wastewater treatment system shall comply with the following requirements:

(1) The owner or operator shall design and operate each waste management unit that comprises the wastewater treatment system in accordance with the appropriate standards specified in §§61.343 through 61.347 of this subpart.

(2) The provisions of paragraph (b)(1) of this section do not apply to any waste management unit that the owner or operator demonstrates to meet the following conditions initially and, thereafter, at least once per year:

(i) The benzene content of each waste stream entering the waste management unit is less than 10 ppmw on a flow-weighted annual average basis as determined by the procedures specified in §61.355(c) of this subpart; and

(ii) The total annual benzene quantity contained in all waste streams managed or treated in exempt waste management units comprising the facility wastewater treatment systems is less than 1 Mg/yr (1.1 ton/yr). For this determination, total annual benzene quantity shall be calculated as follows:

(A) The total annual benzene quantity shall be calculated as the sum of the individual benzene quantities determined at each location where a waste stream first enters an exempt waste management unit. The benzene quantity discharged from an exempt waste management unit shall not be included in this calculation.

(B) The annual benzene quantity in a waste stream managed or treated in an enhanced biodegradation unit shall not be included in the calculation of the total annual benzene quantity, if the enhanced biodegradation unit is the first exempt unit in which the waste is managed or treated. A unit shall be considered enhanced biodegradation if it is a suspended-growth process that generates biomass, uses recycled biomass, and periodically removes biomass from the process. An enhanced biodegradation unit typically operates at a food-to-microorganism ratio in the range of 0.05 to 1.0 kg of biological oxygen demand per kg of biomass per day, a mixed liquor suspended solids ratio in the range of 1 to 8 grams per liter (0.008 to 0.7 pounds per liter), and a residence time in the range of 3 to 36 hours.

(c) The owner and operator shall demonstrate that each treatment process or wastewater treatment system unit, except as provided in paragraph (d) of this section, achieves the appropriate conditions specified in paragraphs (a) or (b) of this section in accordance with the following requirements:

(1) Engineering calculations in accordance with requirements specified in §61.356(e) of this subpart; or

(2) Performance tests conducted using the test methods and procedures that meet the requirements specified in §61.355 of this subpart.

(d) A treatment process or waste stream is in compliance with the requirements of this subpart and exempt from the requirements of paragraph (c) of this section provided that the owner or operator documents that the treatment process or waste stream is in compliance with other regulatory requirements as follows:

(1) The treatment process is a hazardous waste incinerator for which the owner or operator has been issued a final permit under 40 CFR part 270 and complies with the requirements of 40 CFR part 264, subpart O;

(2) The treatment process is an industrial furnace or boiler burning hazardous waste for energy recovery for which the owner or operator has been issued a final permit under 40 CFR part 270 and complies with the requirements of 40 CFR part 266, subpart D;

(3) The waste stream is treated by a means or to a level that meets benzene-specific treatment standards in accordance with the Land Disposal Restrictions under 40 CFR part 268, and the treatment process is designed and operated with a closed-vent system and control device meeting the requirements of §61.349 of this subpart;

(4) The waste stream is treated by a means or to a level that meets benzene-specific effluent limitations or performance standards in accordance with the Effluent Guidelines and Standards under 40 CFR parts 401–464, and the treatment process is designed and operated with a closed-vent system and control device meeting the requirements of §61.349 of this subpart; or

(5) The waste stream is discharged to an underground injection well for which the owner or operator has been issued a final permit under 40 CFR part 270 and complies with the requirements of 40 CFR part 122.

(e) Except as specified in paragraph (e)(3) of this section, if the treatment process or wastewater treatment system unit has any openings (e.g., access doors, hatches, etc.), all such openings shall be sealed (e.g., gasketed, latched, etc.) and kept closed at all times when waste is being treated, except during inspection and maintenance.

(1) Each seal, access door, and all other openings shall be checked by visual inspections initially and quarterly thereafter to ensure that no cracks or gaps occur and that openings are closed and gasketed properly.

(2) Except as provided in §61.350 of this subpart, when a broken seal or gasket or other problem is identified, first efforts at repair shall be made as soon as practicable, but not later than 15 calendar days after identification.

(3) If the cover and closed-vent system operate such that the treatment process and wastewater treatment system unit are maintained at a pressure less than atmospheric pressure, the owner or operator may operate the system with an opening that is not sealed and kept closed at all times if the following conditions are met:

(i) The purpose of the opening is to provide dilution air to reduce the explosion hazard;

(ii) The opening is designed to operate with no detectable emissions as indicated by an instrument reading of less than 500 ppmv above background, as determined initially and thereafter at least once per year by the methods specified in §61.355(h); and

(iii) The pressure is monitored continuously to ensure that the pressure in the treatment process and wastewater treatment system unit remain below atmospheric pressure.

(f) Except for treatment processes complying with paragraph (d) of this section, the Administrator may request at any time an owner or operator demonstrate that a treatment process or wastewater treatment system unit meets the applicable requirements specified in paragraphs (a) or (b) of this section by conducting a performance test using the test methods and procedures as required in §61.355 of this subpart.

(g) The owner or operator of a treatment process or wastewater treatment system unit that is used to comply with the provisions of this section shall monitor the unit in accordance with the applicable requirements in §61.354 of this subpart.

[55 FR 8346, Mar. 7, 1990, as amended at 55 FR 37231, Sept. 10, 1990; 58 FR 3098, Jan. 7, 1993; 65 FR 62160, Oct. 17, 2000]

§ 61.349 Standards: Closed-ventsystems and control devices.

(a) For each closed-vent system and control device used to comply with standards in accordance with §§61.343 through 61.348 of this subpart, the owner or operator shall properly design, install, operate, and maintain the closed-vent system and control device in accordance with the following requirements:

(1) The closed-vent system shall:

(i) Be designed to operate with no detectable emissions as indicated by an instrument reading of less than 500 ppmv above background, as determined initially and thereafter at least once per year by the methods specified in §61.355(h) of this subpart.

(ii) Vent systems that contain any bypass line that could divert the vent stream away from a control device used to comply with the provisions of this subpart shall install, maintain, and operate according to the manufacturer's specifications a flow indicator that provides a record of vent stream flow away from the control device at least once every 15 minutes, except as provided in paragraph (a)(1)(ii)(B) of this section.

(A) The flow indicator shall be installed at the entrance to any bypass line that could divert the vent stream away from the control device to the atmosphere.

(B) Where the bypass line valve is secured in the closed position with a car-seal or a lock-and-key type configuration, a flow indicator is not required.

(iii) All gauging and sampling devices shall be gas-tight except when gauging or sampling is taking place.

(iv) For each closed-vent system complying with paragraph (a) of this section, one or more devices which vent directly to the atmosphere may be used on the closed-vent system provided each device remains in a closed, sealed position during normal operations except when the device needs to open to prevent physical damage or permanent deformation of the closed-vent system resulting from malfunction of the unit in accordance with good engineering and safety practices for handling flammable, explosive, or other hazardous materials.

(2) The control device shall be designed and operated in accordance with the following conditions:

(i) An enclosed combustion device (e.g., a vapor incinerator, boiler, or process heater) shall meet one of the following conditions:

(A) Reduce the organic emissions vented to it by 95 weight percent or greater;

(B) Achieve a total organic compound concentration of 20 ppmv (as the sum of the concentrations for individual compounds using Method 18) on a dry basis corrected to 3 percent oxygen; or

(C) Provide a minimum residence time of 0.5 seconds at a minimum temperature of 760 °C (1,400 °F). If a boiler or process heater issued as the control device, then the vent stream shall be introduced into the flame zone of the boiler or process heater.

(ii) A vapor recovery system (e.g., a carbon adsorption system or a condenser) shall recover or control the organic emissions vented to it with an efficiency of 95 weight percent or greater, or shall recover or control the benzene emissions vented to it with an efficiency of 98 weight percent or greater.

(iii) A flare shall comply with the requirements of 40 CFR 60.18.

(iv) A control device other than those described in paragraphs (a)(2) (i) through (iii) of this section may be used provided that the following conditions are met:

(A) The device shall recover or control the organic emissions vented to it with an efficiency of 95 weight percent or greater, or shall recover or control the benzene emissions vented to it with an efficiency of 98 weight percent or greater.

(B) The owner or operator shall develop test data and design information that documents the control device will achieve an emission control efficiency of either 95 percent or greater for organic compounds or 98 percent or greater for benzene.

(C) The owner or operator shall identify:

(*1*) The critical operating parameters that affect the emission control performance of the device;

(*2*) The range of values of these operating parameters that ensure the emission control efficiency specified in paragraph (a)(2)(iv)(A) of this section is maintained during operation of the device; and

(*3*) How these operating parameters will be monitored to ensure the proper operation and maintenance of the device.

(D) The owner or operator shall submit the information and data specified in paragraphs (a)(2)(iv) (B) and (C) of this section to the Administrator prior to operation of the alternative control device.

(E) The Administrator will determine, based on the information submitted under paragraph (a)(2)(iv)(D) of this section, if the control device subiect to paragraph (a)(2)(iv) of this section meets the requirements of §61.349. The control device subject to paragraph (a)(2)(iv) of this section may be operated prior to receiving approval from the Administrator. However, if the Administrator determines that the control device does not meet the requirements of §61.349, the facility may be subject to enforcement action beginning from the time the control device began operation.

(b) Each closed-vent system and control device used to comply with this subpart shall be operated at all times when waste is placed in the waste management unit vented to the control device except when maintenance or repair of the waste management unit cannot be completed without a shutdown of the control device.

(c) An owner and operator shall demonstrate that each control device, except for a flare, achieves the appropriate conditions specified in paragraph (a)(2) of this section by using one of the following methods:

(1) Engineering calculations in accordance with requirements specified in §61.356(f) of this subpart; or

(2) Performance tests conducted using the test methods and procedures that meet the requirements specified in §61.355 of this subpart.

(d) An owner or operator shall demonstrate compliance of each flare in accordance with paragraph (a)(2)(iii) of this section.

(e) The Administrator may request at any time an owner or operator demonstrate that a control device meets the applicable conditions specified in paragraph (a)(2) of this section by conducting a performance test using the test methods and procedures as required in §61.355, and for control devices subject to paragraph (a)(2)(iv) of this section, the Administrator may specify alternative test methods and procedures, as appropriate.

(f) Each closed-vent system and control device shall be visually inspected initially and quarterly thereafter. The visual inspection shall include inspection of ductwork and piping and connections to covers and control devices for evidence of visable defects such as holes in ductwork or piping and loose connections.

(g) Except as provided in §61.350 of this subpart, if visible defects are observed during an inspection, or if other problems are identified, or if detectable emissions are measured, a first effort to repair the closed-vent system and control device shall be made as soon as practicable but no later than 5 calendar days after detection. Repair shall be completed no later than 15 calendar days after the emissions are detected or the visible defect is observed.

(h) The owner or operator of a control device that is used to comply with the provisions of this section shall monitor the control device in accordance with §61.354(c) of this subpart.

[55 FR 8346, Mar. 7, 1990; 55 FR 12444, Apr. 3, 1990, as amended at 55 FR 37231, Sept. 10, 1990; 58 FR 3098, Jan. 7, 1993; 65 FR 62160, Oct. 17, 2000]

§ 61.350 Standards: Delay of repair.

(a) Delay of repair of facilities or units that are subject to the provisions of this subpart will be allowed if the repair is technically impossible without a complete or partial facility or unit shutdown.

(b) Repair of such equipment shall occur before the end of the next facility or unit shutdown.

§ 61.351 Alternative standards for tanks.

(a) As an alternative to the standards for tanks specified in §61.343 of this subpart, an owner or operator may elect to comply with one of the following:

(1) A fixed roof and internal floating roof meeting the requirements in 40 CFR 60.112b(a)(1);

(2) An external floating roof meeting the requirements of 40 CFR 60.112b (a)(2); or

(3) An alternative means of emission limitation as described in 40 CFR 60.114b.

(b) If an owner or operator elects to comply with the provisions of this section, then the owner or operator is exempt from the provisions of §61.343 of this subpart applicable to the same facilities.

[55 FR 8346, Mar. 7, 1990, as amended at 55 FR 37231, Sept. 10, 1990]

§ 61.352 Alternative standards for oil-water separators.

(a) As an alternative to the standards for oil-water separators specified in §61.347 of this subpart, an owner or operator may elect to comply with one of the following:

(1) A floating roof meeting the requirements in 40 CFR 60.693–2(a); or

(2) An alternative means of emission limitation as described in 40 CFR 60.694.

(b) For portions of the oil-water separator where it is infeasible to construct and operate a floating roof, such as over the weir mechanism, a fixed roof vented to a vapor control device that meets the requirements in §§61.347 and 61.349 of this subpart shall be installed and operated.

(c) Except as provided in paragraph (b) of this section, if an owner or operator elects to comply with the provisions of this section, then the owner or operator is exempt from the provisions in §61.347 of this subpart applicable to the same facilities.

§ 61.353 Alternative means of emission limitation.

(a) If, in the Administrator's judgment, an alternative means of emission limitation will achieve a reduction in benzene emissions at least equivalent to the reduction in benzene emissions from the source achieved by the applicable design, equipment, work practice, or operational requirements in §§61.342 through 61.349, the Administrator will publish in theFederal Registera notice permitting the use of the alternative means for purposes of compliance with that requirement. The notice may condition the permission on requirements related to the operation and maintenance of the alternative means.

(b) Any notice under paragraph (a) of this section shall be published only after public notice and an opportunity for a hearing.

(c) Any person seeking permission under this section shall collect, verify, and submit to the Administrator information showing that the alternative means achieves equivalent emission reductions.

[55 FR 8346, Mar. 7, 1990, as amended at 58 FR 3099, Jan. 7, 1993]

§ 61.354 Monitoring of operations.

(a) Except for a treatment process or waste stream complying with §61.348(d), the owner or operator shall monitor each treatment process or wastewater treatment system unit to ensure the unit is properly operated and maintained by one of the following monitoring procedures:

(1) Measure the benzene concentration of the waste stream exiting the treatment process complying with §61.348(a)(1)(i) at least once per month by collecting and analyzing one or more samples using the procedures specified in §61.355(c)(3).

(2) Install, calibrate, operate, and maintain according to manufacturer's specifications equipment to continuously monitor and record a process parameter (or parameters) for the treatment process or wastewater treatment system unit that indicates proper system operation. The owner or operator shall inspect at least once each operating day the data recorded by the monitoring equipment (e.g., temperature monitor or flow indicator) to ensure that the unit is operating properly.

(b) If an owner or operator complies with the requirements of §61.348(b), then the owner or operator shall monitor each wastewater treatment system to ensure the unit is properly operated and maintained by the appropriate monitoring procedure as follows:

(1) For the first exempt waste management unit in each waste treatment train, other than an enhanced biodegradation unit, measure the flow rate, using the procedures of §61.355(b), and the benzene concentration of each waste stream entering the unit at least once per month by collecting and analyzing one or more samples using the procedures specified in §61.355(c)(3).

(2) For each enhanced biodegradation unit that is the first exempt waste management unit in a treatment train, measure the benzene concentration of each waste stream entering the unit at least once per month by collecting and analyzing one or more samples using the procedures specified in §61.355(c)(3).

(c) An owner or operator subject to the requirements in §61.349 of this subpart shall install, calibrate, maintain, and operate according to the manufacturer's specifications a device to continuously monitor the control device operation as specified in the following paragraphs, unless alternative monitoring procedures or requirements are approved for that facility by the Administrator. The owner or operator shall inspect at least once each operating day the data recorded by the monitoring equipment (e.g., temperature monitor or flow indicator) to ensure that the control device is operating properly.

(1) For a thermal vapor incinerator, a temperature monitoring device equipped with a continuous recorder. The device shall have an accuracy of ±1 percent of the temperature being monitored in °C or ±0.5 °C, whichever is greater. The temperature sensor shall be installed at a representative location in the combustion chamber.

(2) For a catalytic vapor incinerator, a temperature monitoring device equipped with a continuous recorder. The device shall be capable of monitoring temperature at two locations, and have an accuracy of ±1 percent of the temperature being monitored in °C or ±0.5 °C, whichever is greater. One temperature sensor shall be installed in the vent stream at the nearest feasible point to the catalyst bed inlet and a second temperature sensor shall be installed in the vent stream at the nearest feasible point to the catalyst bed outlet.

(3) For a flare, a monitoring device in accordance with 40 CFR 60.18(f)(2) equipped with a continuous recorder.

(4) For a boiler or process heater having a design heat input capacity less than 44 MW (150×10^6 BTU/hr), a temperature monitoring device equipped with a continuous recorder. The device shall have an accuracy of ±1 percent of the temperature being monitored in °C or ±0.5 °C, whichever is greater. The temperature sensor shall be installed at a representative location in the combustion chamber.

(5) For a boiler or process heater having a design heat input capacity greater than or equal to 44 MW (150×10^6 BTU/hr), a monitoring device equipped with a continuous recorder to measure a parameter(s) that indicates good combustion operating practices are being used.

(6) For a condenser, either:

(i) A monitoring device equipped with a continuous recorder to measure either the concentration level of the organic compounds or the concentration level of benzene in the exhaust vent stream from the condenser; or

(ii) A temperature monitoring device equipped with a continuous recorder. The device shall be capable of monitoring temperature at two locations, and have an accuracy of ±1 percent of the temperature being monitored in °C or ±0.5 °C, whichever is greater. One temperature sensor shall be installed at a location in the exhaust stream from the condenser, and a second temperature sensor shall be installed at a location in the coolant fluid exiting the condenser.

(7) For a carbon adsorption system that regenerates the carbon bed directly in the control device such as a fixed-bed carbon adsorber, either:

(i) A monitoring device equipped with a continuous recorder to measure either the concentration level of the organic compounds or the benzene concentration level in the exhaust vent stream from the carbon bed; or

(ii) A monitoring device equipped with a continuous recorder to measure a parameter that indicates the carbon bed is regenerated on a regular, predetermined time cycle.

(8) For a vapor recovery system other than a condenser or carbon adsorption system, a monitoring device equipped with a continuous recorder to measure either the concentration level of the organic compounds or the benzene concentration level in the exhaust vent stream from the control device.

(9) For a control device subject to the requirements of §61.349(a)(2)(iv), devices to monitor the parameters as specified in §61.349(a)(2)(iv)(C).

(d) For a carbon adsorption system that does not regenerate the carbon bed directly on site in the control device (e.g., a carbon canister), either the concentration level of the organic compounds or the concentration level of benzene in the exhaust vent stream from the carbon adsorption system shall be monitored on a regular schedule, and the existing carbon shall be replaced with fresh carbon immediately when carbon breakthrough is indicated. The device shall be monitored on a daily basis or at intervals no greater than 20 percent of the design carbon replacement interval, whichever is greater. As an alternative to conducting this monitoring, an owner or operator may replace the carbon in the carbon adsorption system with fresh carbon at a regular predetermined time interval that is less than the carbon replacement interval that is determined by the maximum design flow rate and either the organic concentration or the benzene concentration in the gas stream vented to the carbon adsorption system.

(e) An alternative operation or process parameter may be monitored if it can be demonstrated that another parameter will ensure that the control device is operated in conformance with these standards and the control device's design specifications.

(f) Owners or operators using a closed-vent system that contains any bypass line that could divert a vent stream from a control device used to comply with the provisions of this subpart shall do the following:

(1) Visually inspect the bypass line valve at least once every month, checking the position of the valve and the condition of the car-seal or closure mechanism required under §61.349(a)(1)(ii) to ensure that the valve is maintained in the closed position and the vent stream is not diverted through the bypass line.

(2) Visually inspect the readings from each flow monitoring device required by §61.349(a)(1)(ii) at least once each operating day to check that vapors are being routed to the control device as required.

(g) Each owner or operator who uses a system for emission control that is maintained at a pressure less than atmospheric pressure with openings to provide dilution air shall install, calibrate, maintain, and operate according to the manufacturer's specifications a device equipped with a continuous recorder to monitor the pressure in the unit to ensure that it is less than atmospheric pressure.

[55 FR 8346, Mar. 7, 1990, as amended at 58 FR 3099, Jan. 7, 1993; 65 FR 62160, Oct. 17, 2000]

§ 61.355 Test methods, procedures, and compliance provisions.

(a) An owner or operator shall determine the total annual benzene quantity from facility waste by the following procedure:

(1) For each waste stream subject to this subpart having a flow-weighted annual average water content greater than 10 percent water, on a volume basis as total water, or is mixed with water or other wastes at any time and the resulting mixture has an annual average water content greater than 10 percent as specified in §61.342(a), the owner or operator shall:

(i) Determine the annual waste quantity for each waste stream using the procedures specified in paragraph (b) of this section.

(ii) Determine the flow-weighted annual average benzene concentration for each waste stream using the procedures specified in paragraph (c) of this section.

(iii) Calculate the annual benzene quantity for each waste stream by multiplying the annual waste quantity of the waste stream times the flow-weighted annual average benzene concentration.

(2) Total annual benzene quantity from facility waste is calculated by adding together the annual benzene quantity for each waste stream generated during the year and the annual benzene quantity for each process unit turnaround waste annualized according to paragraph (b)(4) of this section.

(3) If the total annual benzene quantity from facility waste is equal to or greater than 10 Mg/yr (11 ton/yr), then the owner or operator shall comply with the requirements of §61.342 (c), (d), or (e).

(4) If the total annual benzene quantity from facility waste is less than 10 Mg/yr (11 ton/yr) but is equal to or greater than 1 Mg/yr (1.1 ton/yr), then the owner or operator shall:

(i) Comply with the recordkeeping requirements of §61.356 and reporting requirements of §61.357 of this subpart; and

(ii) Repeat the determination of total annual benzene quantity from facility waste at least once per year and whenever there is a change in the process generating the waste that could cause the total annual benzene quantity from facility waste to increase to 10 Mg/yr (11 ton/yr) or more.

(5) If the total annual benzene quantity from facility waste is less than 1 Mg/yr (1.1 ton/yr), then the owner or operator shall:

(i) Comply with the recordkeeping requirements of §61.356 and reporting requirements of §61.357 of this subpart; and

(ii) Repeat the determination of total annual benzene quantity from facility waste whenever there is a change in the process generating the waste that could cause the total annual benzene quantity from facility waste to increase to 1 Mg/yr (1.1 ton/yr) or more.

(6) The benzene quantity in a waste stream that is generated less than one time per year, except as provided for process unit turnaround waste in paragraph (b)(4) of this section, shall be included in the determination of total annual benzene quantity from facility waste for the year in which the waste is generated unless the waste stream is otherwise excluded from the determination of total annual benzene quantity from facility waste in accordance with paragraphs (a) through (c) of this section. The benzene quantity in this waste stream shall not be annualized or averaged over the time interval between the activities that resulted in generation of the waste, for purposes of determining the total annual benzene quantity from facility waste.

(b) For purposes of the calculation required by paragraph (a) of this section, an owner or operator shall determine the annual waste quantity at the point of waste generation, unless otherwise provided in paragraphs (b) (1), (2), (3), and (4) of this section, by one of the methods given in paragraphs (b) (5) through (7) of this section.

(1) The determination of annual waste quantity for sour water streams that are processed in sour

water strippers shall be made at the point that the water exits the sour water stripper.

(2) The determination of annual waste quantity for wastes at coke by-product plants subject to and complying with the control requirements of §61.132, 61.133, 61.134, or 61.139 of subpart L of this part shall be made at the location that the waste stream exits the process unit component or waste management unit controlled by that subpart or at the exit of the ammonia still, provided that the following conditions are met:

(i) The transfer of wastes between units complying with the control requirements of subpart L of this part, process units, and the ammonia still is made through hard piping or other enclosed system.

(ii) The ammonia still meets the definition of a sour water stripper in §61.341.

(3) The determination of annual waste quantity for wastes that are received at hazardous waste treatment, storage, or disposal facilities from offsite shall be made at the point where the waste enters the hazardous waste treatment, storage, or disposal facility.

(4) The determination of annual waste quantity for each process unit turnaround waste generated only at 2 year or greater intervals, may be made by dividing the total quantity of waste generated during the most recent process unit turnaround by the time period (in the nearest tenth of a year) between the turnaround resulting in generation of the waste and the most recent preceding process turnaround for the unit. The resulting annual waste quantity shall be included in the calculation of the annual benzene quantity as provided in paragraph (a)(1)(iii) of this section for the year in which the turnaround occurs and for each subsequent year until the unit undergoes the next process turnaround. For estimates of total annual benzene quantity as specified in the 90-day report, required under §61.357(a)(1), the owner or operator shall estimate the waste quantity generated during the most recent turnaround, and the time period between turnarounds in accordance with good engineering practices. If the owner or operator chooses not to annualize process unit turnaround waste, as specified in this paragraph, then the process unit turnaround waste quantity shall be included in the calculation of the annual benzene quantity for the year in which the turnaround occurs.

(5) Select the highest annual quantity of waste managed from historical records representing the most recent 5 years of operation or, if the facility has been in service for less than 5 years but at least 1 year, from historical records representing the total operating life of the facility;

(6) Use the maximum design capacity of the waste management unit; or

(7) Use measurements that are representative of maximum waste generation rates.

(c) For the purposes of the calculation required by §§61.355(a) of this subpart, an owner or operator shall determine the flow-weighted annual average ben- zene concentration in a manner that meets the requirements given in paragraph (c)(1) of this section using either of the methods given in paragraphs (c)(2) and (c)(3) of this section.

(1) The determination of flow-weighted annual average benzene concentration shall meet all of the following criteria:

(i) The determination shall be made at the point of waste generation except for the specific cases given in paragraphs (c)(1)(i)(A) through (D) of this section.

(A) The determination for sour water streams that are processed in sour water strippers shall be made at the point that the water exits the sour water stripper.

(B) The determination for wastes at coke by-product plants subject to and complying with the control requirements of §61.132, 61.133, 61.134, or 61.139 of subpart L of this part shall be made

at the location that the waste stream exits the process unit component or waste management unit controlled by that subpart or at the exit of the ammonia still, provided that the following conditions are met:

(*1*) The transfer of wastes between units complying with the control requirements of subpart L of this part, process units, and the ammonia still is made through hard piping or other enclosed system.

(*2*) The ammonia still meets the definition of a sour water stripper in §61.341.

(C) The determination for wastes that are received from offsite shall be made at the point where the waste enters the hazardous waste treatment, storage, or disposal facility.

(D) The determination of flow-weighted annual average benzene concentration for process unit turnaround waste shall be made using either of the methods given in paragraph (c)(2) or (c)(3) of this section. The resulting flow-weighted annual average benzene concentration shall be included in the calculation of annual benzene quantity as provided in paragraph (a)(1)(iii) of this section for the year in which the turnaround occurs and for each subsequent year until the unit undergoes the next process unit turnaround.

(ii) Volatilization of the benzene by exposure to air shall not be used in the determination to reduce the benzene concentration.

(iii) Mixing or diluting the waste stream with other wastes or other materials shall not be used in the determination—to reduce the benzene concentration.

(iv) The determination shall be made prior to any treatment of the waste that removes benzene, except as specified in paragraphs (c)(1)(i)(A) through (D) of this section.

(v) For wastes with multiple phases, the determination shall provide the weighted-average benzene concentration based on the benzene concentration in each phase of the waste and the relative proportion of the phases.

(2) *Knowledge of the waste.* The owner or operator shall provide sufficient information to document the flow-weighted annual average benzene concentration of each waste stream. Examples of information that could constitute knowledge include material balances, records of chemicals purchases, or previous test results provided the results are still relevant to the current waste stream conditions. If test data are used, then the owner or operator shall provide documentation describing the testing protocol and the means by which sampling variability and analytical variability were accounted for in the determination of the flow-weighted annual average benzene concentration for the waste stream. When an owner or operator and the Administrator do not agree on determinations of the flow-weighted annual average benzene concentration based on knowledge of the waste, the procedures under paragraph (c)(3) of this section shall be used to resolve the disagreement.

(3) Measurements of the benzene concentration in the waste stream in accordance with the following procedures:

(i) Collect a minimum of three representative samples from each waste stream. Where feasible, samples shall be taken from an enclosed pipe prior to the waste being exposed to the atmosphere.

(ii) For waste in enclosed pipes, the following procedures shall be used:

(A) Samples shall be collected prior to the waste being exposed to the atmosphere in order to minimize the loss of benzene prior to sampling.

(B) A static mixer shall be installed in the process line or in a by-pass line unless the owner or operator demonstrates that installation of a static mixer in the line is not necessary to accurately determine the benzene concentration of the waste stream.

(C) The sampling tap shall be located within two pipe diameters of the static mixer outlet.

(D) Prior to the initiation of sampling, sample lines and cooling coil shall be purged with at least four volumes of waste.

(E) After purging, the sample flow shall be directed to a sample container and the tip of the sampling tube shall be kept below the surface of the waste during sampling to minimize contact with the atmosphere.

(F) Samples shall be collected at a flow rate such that the cooling coil is able to maintain a waste temperature less than 10 °C (50 °F).

(G) After filling, the sample container shall be capped immediately (within 5 seconds) to leave a minimum headspace in the container.

(H) The sample containers shall immediately be cooled and maintained at a temperature below 10 °C (50 °F) for transfer to the laboratory.

(iii) When sampling from an enclosed pipe is not feasible, a minimum of three representative samples shall be collected in a manner to minimize exposure of the sample to the atmosphere and loss of benzene prior to sampling.

(iv) Each waste sample shall be analyzed using one of the following test methods for determining the benzene concentration in a waste stream:

(A) Method 8020, Aromatic Volatile Organics, in “Test Methods for Evaluating Solid Waste, Physical/Chemical Methods,” EPA Publication No. SW–846 (incorporation by reference as specified in §61.18 of this part);

(B) Method 8021, Volatile Organic Compounds in Water by Purge and Trap Capillary Column Gas Chromatography with Photoionization and Electrolytic Conductivity Detectors in Series in “Test Methods for Evaluating Solid Waste, Physical/Chemical Methods,” EPA Publication No. SW–846 (incorporation by reference as specified in §61.18 of this part);

(C) Method 8240, Gas Chromatography/Mass Spectrometry for Volatile Organics in “Test Methods for Evaluating Solid Waste, Physical/Chemical Methods,” EPA Publication No. SW–846 (incorporation by reference as specified in §61.18 of this part);

(D) Method 8260, Gas Chromatography/Mass Spectrometry for Volatile Organics: Capillary Column Technique in “Test Methods for Evaluating Solid Waste, Physical/Chemical Methods,” EPA Publication No. SW–846 (incorporation by reference as specified in §61.18 of this part);

(E) Method 602, Purgeable Aromatics, as described in 40 CFR part 136, appendix A, Test Procedures for Analysis of Organic Pollutants, for wastewaters for which this is an approved EPA methods; or

(F) Method 624, Purgeables, as described in 40 CFR part 136, appendix A, Test Procedures for Analysis of Organic Pollutants, for wastewaters for which this is an approved EPA method.

(v) The flow-weighted annual average benzene concentration shall be calculated by averaging the results of the sample analyses as follows:

$$\bar{C} = \frac{1}{Q_t} \times \sum_{i=1}^{n} (Q_i)(C_i)$$

Where:

C=Flow-weighted annual average benzene concentration for waste stream, ppmw.

Q_t=Total annual waste quantity for waste stream, kg/yr (lb/yr).

n=Number of waste samples (at least 3).

Q_i=Annual waste quantity for waste stream represented by C_i, kg/yr (lb/yr).

C_i=Measured concentration of benzene in waste sample i, ppmw.

(d) An owner or operator using performance tests to demonstrate compliance of a treatment process with §61.348 (a)(1)(i) shall measure the flow-weighted annual average benzene concentration of the waste stream exiting the treatment process by collecting and analyzing a minimum of three representative samples of the waste stream using the procedures in paragraph (c)(3) of this section. The test shall be conducted under conditions that exist when the treatment process is operating at the highest inlet waste stream flow rate and benzene content expected to occur. Operations during periods of startup, shutdown, and malfunction shall not constitute representative conditions for the purpose of a test. The owner or operator shall record all process information as is necessary to document the operating conditions during the test.

(e) An owner or operator using performance tests to demonstrate compliance of a treatment process with §61.348(a)(1)(ii) of this subpart shall determine the percent reduction of benzene in the waste stream on a mass basis by the following procedure:

(1) The test shall be conducted under conditions that exist when the treatment process is operating at the highest inlet waste stream flow rate and benzene content expected to occur. Operations during periods of startup, shutdown, and malfunction shall not constitute representative conditions for the purpose of a test. The owner or operator shall record all process information as is necessary to document the operating conditions during the test.

(2) All testing equipment shall be prepared and installed as specified in the appropriate test methods.

(3) The mass flow rate of benzene entering the treatment process (E_b) shall be determined by computing the product of the flow rate of the waste stream entering the treatment process, as determined by the inlet flow meter, and the benzene concentration of the waste stream, as determined using the sampling and analytical procedures specified in paragraph (c)(2) or (c)(3) of this section. Three grab samples of the waste shall be taken at equally spaced time intervals over a 1-hour period. Each 1-hour period constitutes a run, and the performance test shall consist of a minimum of 3 runs conducted over a 3-hour period. The mass flow rate of benzene entering the treatment process is calculated as follows:

$$E_b = \frac{K}{n \times 10^6} \left[\sum_{i=1}^{n} V_i C_i \right]$$

Where:

E_b= Mass flow rate of benzene entering the treatment process, kg/hr (lb/hr).

K = Density of the waste stream, kg/m^3 (lb/ft^3).

V_i= Average volume flow rate of waste entering the treatment process during each run i, m^3 /hr (ft^3 /hr).

C_i= Average concentration of benzene in the waste stream entering the treatment process during each run i, ppmw.

n = Number of runs.

10^6 = Conversion factor for ppmw.

(4) The mass flow rate of benzene exiting the treatment process (E_a) shall be determined by computing the product of the flow rate of the waste stream exiting the treatment process, as determined by the outlet flow meter or the inlet flow meter, and the benzene concentration of the waste stream, as determined using the sampling and analytical procedures specified in paragraph (c)(2) or (c)(3) of this section. Three grab samples of the waste shall be taken at equally spaced time intervals over a 1-hour period. Each 1-hour period constitutes a run, and the performance test shall consist of a minimum of 3 runs conducted over the same 3-hour period at which the mass flow rate of benzene entering the treatment process is determined. The mass flow rate of benzene exiting the treatment process is calculated as follows:

$$E_a = \frac{K}{n \times 10^6}\left[\sum_{i=1}^{n} V_i C_i\right]$$

Where:

E_a= Mass flow rate of benzene exiting the treatment process, kg/hr (lb/hr).

K = Density of the waste stream, kg/m^3 (lb/ft^3).

V_i= Average volume flow rate of waste exiting the treatment process during each run i, m^3 /hr (ft^3 /hr).

C_i= Average concentration of benzene in the waste stream exiting the treatment process during each run i, ppmw.

n = Number of runs.

10^6 = Conversion factor for ppmw.

(f) An owner or operator using performance tests to demonstrate compliance of a treatment process with §61.348(a)(1)(iii) of this subpart shall determine the benzene destruction efficiency for the combustion unit by the following procedure:

(1) The test shall be conducted under conditions that exist when the combustion unit is operating at the highest inlet waste stream flow rate and benzene content expected to occur. Operations during periods of startup, shutdown, and malfunction shall not constitute representative conditions for the purpose of a test. The owner or operator shall record all process information necessary to document the operating conditions during the test.

(2) All testing equipment shall be prepared and installed as specified in the appropriate test methods.

(3) The mass flow rate of benzene entering the combustion unit shall be determined by computing the product of the flow rate of the waste stream entering the combustion unit, as determined by the inlet flow meter, and the benzene concentration of the waste stream, as determined using the sampling procedures in paragraph (c)(2) or (c)(3) of this section. Three grab samples of the waste shall be taken at equally spaced time intervals over a 1-hour period. Each

1-hour period constitutes a run, and the performance test shall consist of a minimum of 3 runs conducted over a 3-hour period. The mass flow rate of benzene into the combustion unit is calculated as follows:

$$E_b = \frac{K}{n \times 10^6}\left[\sum_{i=1}^{n} V_i C_i\right]$$

Where:

E_b= Mass flow rate of benzene entering the combustion unit, kg/hr (lb/hr).

K = Density of the waste stream, kg/m^3 (lb/ft^3).

V_i= Average volume flow rate of waste entering the combustion unit during each run i, m^3 /hr (ft^3 /hr).

C_i= Average concentration of benzene in the waste stream entering the combustion unit during each run i, ppmw.

n = Number of runs.

10^6 = Conversion factor for ppmw.

(4) The mass flow rate of benzene exiting the combustion unit exhaust stack shall be determined as follows:

(i) The time period for the test shall not be less than 3 hours during which at least 3 stack gas samples are collected and be the same time period at which the mass flow rate of benzene entering the treatment process is determined. Each sample shall be collected over a 1-hour period (e.g., in a tedlar bag) to represent a time-integrated composite sample and each 1-hour period shall correspond to the periods when the waste feed is sampled.

(ii) A run shall consist of a 1-hour period during the test. For each run:

(A) The reading from each measurement shall be recorded;

(B) The volume exhausted shall be determined using Method 2, 2A, 2C, or 2D from appendix A of 40 CFR part 60, as appropriate.

(C) The average benzene concentration in the exhaust downstream of the combustion unit shall be determined using Method 18 from appendix A of 40 CFR part 60.

(iii) The mass of benzene emitted during each run shall be calculated as follows:

$$M_i = D_b V C \left(10^{-6}\right)$$

Where:

M_i= Mass of benzene emitted during run i, kg (lb).

V = Volume of air-vapor mixture exhausted at standard conditions, m^3 (ft^3).

C = Concentration of benzene measured in the exhaust, ppmv.

D_b= Density of benzene, 3.24 kg/m^3 (0.202 lb/ft^3).

10^6 = Conversion factor for ppmv.

(iv) The benzene mass emission rate in the exhaust shall be calculated as follows:

$$E_a = \left(\sum_{i=1}^{n} M_i \right) / T$$

Where:

E_a= Mass flow rate of benzene emitted from the combustion unit, kg/hr (lb/hr).

M_i= Mass of benzene emitted from the combustion unit during run i, kg (lb).

T = Total time of all runs, hr.

n = Number of runs.

(5) The benzene destruction efficiency for the combustion unit shall be calculated as follows:

$$R = \frac{E_b - E_a}{E_b} \times 100$$

Where:

R = Benzene destruction efficiency for the combustion unit, percent.

E_b= Mass flow rate of benzene entering the combustion unit, kg/hr (lb/hr).

E_a= Mass flow rate of benzene emitted from the combustion unit, kg/hr (lb/hr).

(g) An owner or operator using performance tests to demonstrate compliance of a wastewater treatment system unit with §61.348(b) shall measure the flow-weighted annual average benzene concentration of the wastewater stream where the waste stream enters an exempt waste management unit by collecting and analyzing a minimum of three representative samples of the waste stream using the procedures in paragraph (c)(3) of this section. The test shall be conducted under conditions that exist when the wastewater treatment system is operating at the highest inlet wastewater stream flow rate and benzene content expected to occur. Operations during periods of startup, shutdown, and malfunction shall not constitute representative conditions for the purpose of a test. The owner or operator shall record all process information as is necessary to document the operating conditions during the test.

(h) An owner or operator shall test equipment for compliance with no detectable emissions as required in §§61.343 through 61.347, and §61.349 of this subpart in accordance with the following requirements:

(1) Monitoring shall comply with Method 21 from appendix A of 40 CFR part 60.

(2) The detection instrument shall meet the performance criteria of Method 21.

(3) The instrument shall be calibrated before use on each day of its use by the procedures specified in Method 21.

(4) Calibration gases shall be:

(i) Zero air (less than 10 ppm of hydrocarbon in air); and

(ii) A mixture of methane or n-hexane and air at a concentration of approximately, but less than, 10,000 ppm methane or n-hexane.

(5) The background level shall be determined as set forth in Method 21.

(6) The instrument probe shall be traversed around all potential leak interfaces as close as possible to the interface as described in Method 21.

(7) The arithmetic difference between the maximum concentration indicated by the instrument and the background level is compared to 500 ppm for determining compliance.

(i) An owner or operator using a performance test to demonstrate compliance of a control device with either the organic reduction efficiency requirement or the benzene reduction efficiency requirement specified under §61.349(a)(2) shall use the following procedures:

(1) The test shall be conducted under conditions that exist when the waste management unit vented to the control device is operating at the highest load or capacity level expected to occur. Operations during periods of startup, shutdown, and malfunction shall not constitute representative conditions for the purpose of a test. The owner or operator shall record all process information necessary to document the operating conditions during the test.

(2) Sampling sites shall be selected using Method 1 or 1A from appendix A of 40 CFR part 60, as appropriate.

(3) The mass flow rate of either the organics or benzene entering and exiting the control device shall be determined as follows:

(i) The time period for the test shall not be less than 3 hours during which at least 3 stack gas samples are collected. Samples of the vent stream entering and exiting the control device shall be collected during the same time period. Each sample shall be collected over a 1-hour period (e.g., in a tedlar bag) to represent a time-integrated composite sample.

(ii) A run shall consist of a 1-hour period during the test. For each run:

(A) The reading from each measurement shall be recorded;

(B) The volume exhausted shall be determined using Method 2, 2A, 2C, or 2D from appendix A of 40 CFR part 60, as appropriate;

(C) The organic concentration or the benzene concentration, as appropriate, in the vent stream entering and exiting the control shall be determined using Method 18 from appendix A of 40 CFR part 60.

(iii) The mass of organics or benzene entering and exiting the control device during each run shall be calculated as follows:

$$M_{aj} = \frac{K_1 V_{aj}}{10^6}\left(\sum_{i=1}^{n} C_{ai} MW_i\right)$$

$$M_{bj} = \frac{K_1 V_{bj}}{10^6}\left(\sum_{i=1}^{n} C_{bi} MW_i\right)$$

M_{aj}= Mass of organics or benzene in the vent stream entering the control device during run j, kg (lb).

M_{bj}= Mass of organics or benzene in the vent stream exiting the control device during run j, kg (lb).

V_{aj}= Volume of vent stream entering the control device during run j, at standard conditions, m^3 (ft^3).

V_{bj}= Volume of vent stream exiting the control device during run j, at standard conditions, m^3 (ft^3).

C_{ai}= Organic concentration of compound i or the benzene concentration measured in the vent stream entering the control device as determined by Method 18, ppm by volume on a dry basis.

C_{bi}= Organic concentration of compound i or the benzene concentration measured in the vent stream exiting the control device as determined by Method 18, ppm by volume on a dry basis.

MW_i= Molecular weight of organic compound i in the vent stream, or the molecular weight of benzene, kg/kg-mol (lb/lb-mole).

n = Number of organic compounds in the vent stream; if benzene reduction efficiency is being demonstrated, then n=1.

K_1= Conversion factor for molar volume at standard conditions (293 K and 760 mm Hg (527 R and 14.7 psia))

= 0.0416 kg-mol/m^3 (0.00118 lb-mol/ft^3)

10^{-6}=Conversion factor for ppmv.

(iv) The mass flow rate of organics or benzene entering and exiting the control device shall be calculated as follows:

$$E_a - \left(\sum_{j=1}^{n} M_{aj}\right) / T$$

$$E_b - \left(\sum_{j=1}^{n} M_{bj}\right) / T$$

Where:

E_a= Mass flow rate of organics or benzene entering the control device, kg/hr (lb/hr).

E_b= Mass flow rate of organics or benzene exiting the control device, kg/hr (lb/hr).

M_{aj}= Mass of organics or benzene in the vent stream entering the control device during run j, kg (lb).

M_{bj}= Mass of organics or benzene in the vent stream exiting the control device during run j, kg (lb).

T = Total time of all runs, hr.

n = Number of runs.

(4) The organic reduction efficiency or the benzene reduction efficiency for the control device shall be calculated as follows:

$$R = \frac{E_a - E_b}{E_a} \times 100$$

Where:

R = Total organic reduction of efficiency or benzene reduction efficiency for the control device, percent.

E_b= Mass flow rate of organics or benzene entering the control device, kg/hr (lb/hr).

E_a= Mass flow rate of organic or benzene emitted from the control device, kg/hr (lb/hr).

(j) An owner or operator shall determine the benzene quantity for the purposes of the calculation required by §61.342 (c)(3)(ii)(B) according to the provisions of paragraph (a) of this section, except that the procedures in paragraph (a) of this section shall also apply to wastes with a water content of 10 percent or less.

(k) An owner or operator shall determine the benzene quantity for the purposes of the calculation required by §61.342(e)(2) by the following procedure:

(1) For each waste stream that is not controlled for air emissions in accordance with §61.343. 61.344, 61.345, 61.346, 61.347, or 61.348(a), as applicable to the waste management unit that manages the waste, the benzene quantity shall be determined as specified in paragraph (a) of this section, except that paragraph (b)(4) of this section shall not apply, i.e., the waste quantity for process unit turnaround waste is not annualized but shall be included in the determination of benzene quantity for the year in which the waste is generated for the purposes of the calculation required by §61.342(e)(2).

(2) For each waste stream that is controlled for air emissions in accordance with §61.343. 61.344, 61.345, 61.346, 61.347, or 61.348(a), as applicable to the waste management unit that manages the waste, the determination of annual waste quantity and flow-weighted annual average benzene concentration shall be made at the first applicable location as described in paragraphs (k)(2)(i), (k)(2)(ii), and (k)(2)(iii) of this section and prior to any reduction of benzene concentration through volatilization of the benzene, using the methods given in (k)(2)(iv) and (k)(2)(v) of this section.

(i) Where the waste stream enters the first waste management unit not complying with §§61.343, 61.344, 61.345, 61.346, 61.347, and 61.348(a) that are applicable to the waste management unit,

(ii) For each waste stream that is managed or treated only in compliance with §§61.343 through 61.348(a) up to the point of final direct discharge from the facility, the determination of benzene quantity shall be prior to any reduction of benzene concentration through volatilization of the benzene, or

(iii) For wastes managed in units controlled for air emissions in accordance with §§61.343, 61.344, 61.345, 61.346, 61.347, and 61.348(a), and then transferred offsite, facilities shall use the first applicable offsite location as described in paragraphs (k)(2)(i) and (k)(2)(ii) of this section if they have documentation from the offsite facility of the benzene quantity at this location. Facilities without this documentation for offsite wastes shall use the benzene quantity determined at the point where the transferred waste leaves the facility.

(iv) Annual waste quantity shall be determined using the procedures in paragraphs (b)(5), (6), or (7) of this section, and

(v) The flow-weighted annual average benzene concentration shall be determined using the procedures in paragraphs (c)(2) or (3) of this section.

(3) The benzene quantity in a waste stream that is generated less than one time per year, including process unit turnaround waste, shall be included in the determination of benzene quantity as determined in paragraph (k)(6) of this section for the year in which the waste is generated. The benzene quantity in this waste stream shall not be annualized or averaged over the time interval between the activities that resulted in generation of the waste for purposes of determining benzene quantity as determined in paragraph (k)(6) of this section.

(4) The benzene in waste entering an enhanced biodegradation unit, as defined in §61.348(b)(2)(ii)(B), shall not be included in the determination of benzene quantity, determined in paragraph (k)(6) of this section, if the following conditions are met:

(i) The benzene concentration for each waste stream entering the enhanced biodegradation unit is less than 10 ppmw on a flow-weighted annual average basis, and

(ii) All prior waste management units managing the waste comply with §§61.343, 61.344, 61.345, 61.346, 61.347 and 61.348(a).

(5) The benzene quantity for each waste stream in paragraph (k)(2) of this section shall be determined by multiplying the annual waste quantity of each waste stream times its flow-weighted annual average benzene concentration.

(6) The total benzene quantity for the purposes of the calculation required by §61.342(e)(2) shall be determined by adding together the benzene quantities determined in paragraphs (k)(1) and (k)(5) of this section for each applicable waste stream.

(7) If the benzene quantity determined in paragraph (6) of this section exceeds 6.0 Mg/yr (6.6 ton/yr) only because of multiple counting of the benzene quantity for a waste stream, the owner or operator may use the following procedures for the purposes of the calculation required by §61.342(e)(2):

(i) Determine which waste management units are involved in the multiple counting of benzene;

(ii) Determine the quantity of benzene that is emitted, recovered, or removed from the affected units identified in paragraph (k)(7)(i) of this section, or destroyed in the units if applicable, using either direct measurements or the best available estimation techniques developed or approved by the Administrator.

(iii) Adjust the benzene quantity to eliminate the multiple counting of benzene based on the results from paragraph (k)(7)(ii) of this section and determine the total benzene quantity for the purposes of the calculation required by §61.342(e)(2).

(iv) Submit in the annual report required under §61.357(a) a description of the methods used and the resulting calculations for the alternative procedure under paragraph (k)(7) of this section, the benzene quantity determination from paragraph (k)(6) of this section, and the adjusted benzene quantity determination from paragraph (k)(7)(iii) of this section.

[55 FR 8346, Mar. 7, 1990; 55 FR 12444, Apr. 3, 1990, as amended at 55 FR 37231, Sept. 10, 1990; 58 FR 3099, Jan. 7, 1993; 65 FR 62160, Oct. 17, 2000]

§ 61.356 Recordkeeping requirements.

(a) Each owner or operator of a facility subject to the provisions of this subpart shall comply with the recordkeeping requirements of this section. Each record shall be maintained in a readily accessible location at the facility site for a period not less than two years from the date the information is recorded unless otherwise specified.

(b) Each owner or operator shall maintain records that identify each waste stream at the facility

subject to this subpart, and indicate whether or not the waste stream is controlled for benzene emissions in accordance with this subpart. In addition the owner or operator shall maintain the following records:

(1) For each waste stream not controlled for benzene emissions in accordance with this subpart, the records shall include all test results, measurements, calculations, and other documentation used to determine the following information for the waste stream: waste stream identification, water content, whether or not the waste stream is a process wastewater stream, annual waste quantity, range of benzene concentrations, annual average flow-weighted benzene concentration, and annual benzene quantity.

(2) For each waste stream exempt from §61.342(c)(1) in accordance with §61.342(c)(3), the records shall include:

(i) All measurements, calculations, and other documentation used to determine that the continuous flow of process wastewater is less than 0.02 liters (0.005 gallons) per minute or the annual waste quantity of process wastewater is less than 10 Mg/yr (11 ton/yr) in accordance with §61.342(c)(3)(i), or

(ii) All measurements, calculations, and other documentation used to determine that the sum of the total annual benzene quantity in all exempt waste streams does not exceed 2.0 Mg/yr (2.2 ton/yr) in accordance with §61.342(c)(3)(ii).

(3) For each facility where process wastewater streams are controlled for benzene emissions in accordance with §61.342(d) of this subpart, the records shall include for each treated process wastewater stream all measurements, calculations, and other documentation used to determine the annual benzene quantity in the process wastewater stream exiting the treatment process.

(4) For each facility where waste streams are controlled for benzene emissions in accordance with §61.342(e), the records shall include for each waste stream all measurements, including the locations of the measurements, calculations, and other documentation used to determine that the total benzene quantity does not exceed 6.0 Mg/yr (6.6 ton/yr).

(5) For each facility where the annual waste quantity for process unit turnaround waste is determined in accordance with §61.355(b)(5), the records shall include all test results, measurements, calculations, and other documentation used to determine the following information: identification of each process unit at the facility that undergoes turnarounds, the date of the most recent turnaround for each process unit, identification of each process unit turnaround waste, the water content of each process unit turnaround waste, the annual waste quantity determined in accordance with §61.355(b)(5), the range of benzene concentrations in the waste, the annual average flow-weighted benzene concentration of the waste, and the annual benzene quantity calculated in accordance with §61.355(a)(1)(iii) of this section.

(6) For each facility where wastewater streams are controlled for benzene emissions in accordance with §61.348(b)(2), the records shall include all measurements, calculations, and other documentation used to determine the annual benzene content of the waste streams and the total annual benzene quantity contained in all waste streams managed or treated in exempt waste management units.

(c) An owner or operator transferring waste off-site to another facility for treatment in accordance with §61.342(f) shall maintain documentation for each offsite waste shipment that includes the following information: Date waste is shipped offsite, quantity of waste shipped offsite, name and address of the facility receiving the waste, and a copy of the notice sent with the waste shipment.

(d) An owner or operator using control equipment in accordance with §§61.343 through 61.347 shall maintain engineering design documentation for all control equipment that is installed on the waste management unit. The documentation shall be retained for the life of the control

equipment. If a control device is used, then the owner or operator shall maintain the control device records required by paragraph (f) of this section.

(e) An owner or operator using a treatment process or wastewater treatment system unit in accordance with §61.348 of this subpart shall maintain the following records. The documentation shall be retained for the life of the unit.

(1) A statement signed and dated by the owner or operator certifying that the unit is designed to operate at the documented performance level when the waste stream entering the unit is at the highest waste stream flow rate and benzene content expected to occur.

(2) If engineering calculations are used to determine treatment process or wastewater treatment system unit performance, then the owner or operator shall maintain the complete design analysis for the unit. The design analysis shall include for example the following information: Design specifications, drawings, schematics, piping and instrumentation diagrams, and other documentation necessary to demonstrate the unit performance.

(3) If performance tests are used to determine treatment process or wastewater treatment system unit performance, then the owner or operator shall maintain all test information necessary to demonstrate the unit performance.

(i) A description of the unit including the following information: type of treatment process; manufacturer name and model number; and for each waste stream entering and exiting the unit, the waste stream type (e.g., process wastewater, sludge, slurry, etc.), and the design flow rate and benzene content.

(ii) Documentation describing the test protocol and the means by which sampling variability and analytical variability were accounted for in the determination of the unit performance. The description of the test protocol shall include the following information: sampling locations, sampling method, sampling frequency, and analytical procedures used for sample analysis.

(iii) Records of unit operating conditions during each test run including all key process parameters.

(iv) All test results.

(4) If a control device is used, then the owner or operator shall maintain the control device records required by paragraph (f) of this section.

(f) An owner or operator using a closed-vent system and control device in accordance with §61.349 of this subpart shall maintain the following records. The documentation shall be retained for the life of the control device.

(1) A statement signed and dated by the owner or operator certifying that the closed-vent system and control device is designed to operate at the documented performance level when the waste management unit vented to the control device is or would be operating at the highest load or capacity expected to occur.

(2) If engineering calculations are used to determine control device performance in accordance with §61.349(c), then a design analysis for the control device that includes for example:

(i) Specifications, drawings, schematics, and piping and instrumentation diagrams prepared by the owner or operator, or the control device manufacturer or vendor that describe the control device design based on acceptable engineering texts. The design analysis shall address the following vent stream characteristics and control device operating parameters:

(A) For a thermal vapor incinerator, the design analysis shall consider the vent stream

composition, constituent concentrations, and flow rate. The design analysis shall also establish the design minimum and average temperature in the combustion zone and the combustion zone residence time.

(B) For a catalytic vapor incinerator, the design analysis shall consider the vent stream composition, constituent concentrations, and flow rate. The design analysis shall also establish the design minimum and average temperatures across the catalyst bed inlet and outlet.

(C) For a boiler or process heater, the design analysis shall consider the vent stream composition, constituent concentrations, and flow rate. The design analysis shall also establish the design minimum and average flame zone temperatures, combustion zone residence time, and description of method and location where the vent stream is introduced into the flame zone.

(D) For a flare, the design analysis shall consider the vent stream composition, constituent concentrations, and flow rate. The design analysis shall also consider the requirements specified in 40 CFR 60.18.

(E) For a condenser, the design analysis shall consider the vent stream composition, constituent concentration, flow rate, relative humidity, and temperature. The design analysis shall also establish the design outlet organic compound concentration level or the design outlet benzene concentration level, design average temperature of the condenser exhaust vent stream, and the design average temperatures of the coolant fluid at the condenser inlet and outlet.

(F) For a carbon adsorption system that regenerates the carbon bed directly on-site in the control device such as a fixed-bed adsorber, the design analysis shall consider the vent stream composition, constituent concentration, flow rate, relative humidity, and temperature. The design analysis shall also establish the design exhaust vent stream organic compound concentration level or the design exhaust vent stream benzene concentration level, number and capacity of carbon beds, type and working capacity of activated carbon used for carbon beds, design total steam flow over the period of each complete carbon bed regeneration cycle, duration of the carbon bed steaming and cooling/drying cycles, design carbon bed temperature after regeneration, design carbon bed regeneration time, and design service life of carbon.

(G) For a carbon adsorption system that does not regenerate the carbon bed directly on-site in the control device, such as a carbon canister, the design analysis shall consider the vent stream composition, constituent concentration, flow rate, relative humidity, and temperature. The design analysis shall also establish the design exhaust vent stream organic compound concentration level or the design exhaust vent stream benzene concentration level, capacity of carbon bed, type and working capacity of activated carbon used for carbon bed, and design carbon replacement interval based on the total carbon working capacity of the control device and source operating schedule.

(H) For a control device subject to the requirements of §61.349(a)(2)(iv), the design analysis shall consider the vent stream composition, constituent concentration, and flow rate. The design analysis shall also include all of the information submitted under §61.349 (a)(2)(iv).

(ii) [Reserved]

(3) If performance tests are used to determine control device performance in accordance with §61.349(c) of this subpart:

(i) A description of how it is determined that the test is conducted when the waste management unit or treatment process is operating at the highest load or capacity level. This description shall include the estimated or design flow rate and organic content of each vent stream and definition of the acceptable operating ranges of key process and control parameters during the test program.

(ii) A description of the control device including the type of control device, control device manufacturer's name and model number, control device dimensions, capacity, and construction materials.

(iii) A detailed description of sampling and monitoring procedures, including sampling and monitoring locations in the system, the equipment to be used, sampling and monitoring frequency, and planned analytical procedures for sample analysis.

(iv) All test results.

(g) An owner or operator shall maintain a record for each visual inspection required by §§61.343 through 61.347 of this subpart that identifies a problem (such as a broken seal, gap or other problem) which could result in benzene emissions. The record shall include the date of the inspection, waste management unit and control equipment location where the problem is identified, a description of the problem, a description of the corrective action taken, and the date the corrective action was completed.

(h) An owner or operator shall maintain a record for each test of no detectable emissions required by §§61.343 through 61.347 and §61.349 of this subpart. The record shall include the following information: date the test is performed, background level measured during test, and maximum concentration indicated by the instrument reading measured for each potential leak interface. If detectable emissions are measured at a leak interface, then the record shall also include the waste management unit, control equipment, and leak interface location where detectable emissions were measured, a description of the problem, a description of the corrective action taken, and the date the corrective action was completed.

(i) For each treatment process and wastewater treatment system unit operated to comply with §61.348, the owner or operator shall maintain documentation that includes the following information regarding the unit operation:

(1) Dates of startup and shutdown of the unit.

(2) If measurements of waste stream benzene concentration are performed in accordance with §61.354(a)(1) of this subpart, the owner or operator shall maintain records that include date each test is performed and all test results.

(3) If a process parameter is continuously monitored in accordance with §61.354(a)(2) of this subpart, the owner or operator shall maintain records that include a description of the operating parameter (or parameters) to be monitored to ensure that the unit will be operated in conformance with these standards and the unit's design specifications, and an explanation of the criteria used for selection of that parameter (or parameters). This documentation shall be kept for the life of the unit.

(4) If measurements of waste stream benzene concentration are performed in accordance with §61.354(b), the owner or operator shall maintain records that include the date each test is performed and all test results.

(5) Periods when the unit is not operated as designed.

(j) For each control device, the owner or operator shall maintain documentation that includes the following information regarding the control device operation:

(1) Dates of startup and shutdown of the closed-vent system and control device.

(2) A description of the operating parameter (or parameters) to be monitored to ensure that the control device will be operated in conformance with these standards and the control device's design specifications and an explanation of the criteria used for selection of that parameter (or

parameters). This documentation shall be kept for the life of the control device.

(3) Periods when the closed-vent system and control device are not operated as designed including all periods and the duration when:

(i) Any valve car-seal or closure mechanism required under §61.349(a)(1)(ii) is broken or the by-pass line valve position has changed.

(ii) The flow monitoring devices required under §61.349(a)(1)(ii) indicate that vapors are not routed to the control device as required.

(4) If a thermal vapor incinerator is used, then the owner or operator shall maintain continuous records of the temperature of the gas stream in the combustion zone of the incinerator and records of all 3-hour periods of operation during which the average temperature of the gas stream in the combustion zone is more than 28 °C (50 °F) below the design combustion zone temperature.

(5) If a catalytic vapor incinerator is used, then the owner or operator shall maintain continuous records of the temperature of the gas stream both upstream and downstream of the catalyst bed of the incinerator, records of all 3-hour periods of operation during which the average temperature measured before the catalyst bed is more than 28 °C (50 °F) below the design gas stream temperature, and records of all 3-hour periods of operation during which the average temperature difference across the catalyst bed is less than 80 percent of the design temperature difference.

(6) If a boiler or process heater is used, then the owner or operator shall maintain records of each occurrence when there is a change in the location at which the vent stream is introduced into the flame zone as required by §61.349(a)(2)(i)(C). For a boiler or process heater having a design heat input capacity less than 44 MW (150 × 106 BTU/hr), the owner or operator shall maintain continuous records of the temperature of the gas stream in the combustion zone of the boiler or process heater and records of all 3-hour periods of operation during which the average temperature of the gas stream in the combustion zone is more than 28 °C (50 °F) below the design combustion zone temperature. For a boiler or process heater having a design heat input capacity greater than or equal to 44 MW (150 × 106 BTU/hr), the owner or operator shall maintain continuous records of the parameter(s) monitored in accordance with the requirements of §61.354(c)(5).

(7) If a flare is used, then the owner or operator shall maintain continuous records of the flare pilot flame monitoring and records of all periods during which the pilot flame is absent.

(8) If a condenser is used, then the owner or operator shall maintain records from the monitoring device of the parameters selected to be monitored in accordance with §61.354(c)(6). If concentration of organics or concentration of benzene in the control device outlet gas stream is monitored, then the owner or operator shall record all 3-hour periods of operation during which the concentration of organics or the concentration of benzene in the exhaust stream is more than 20 percent greater than the design value. If the temperature of the condenser exhaust stream and coolant fluid is monitored, then the owner or operator shall record all 3-hour periods of operation during which the temperature of the condenser exhaust vent stream is more than 6 °C (11 °F) above the design average exhaust vent stream temperature, or the temperature of the coolant fluid exiting the condenser is more than 6 °C (11 °F) above the design average coolant fluid temperature at the condenser outlet.

(9) If a carbon adsorber is used, then the owner or operator shall maintain records from the monitoring device of the concentration of organics or the concentration of benzene in the control device outlet gas stream. If the concentration of organics or the concentration of benzene in the control device outlet gas stream is monitored, then the owner or operator shall record all 3-hour periods of operation during which the concentration of organics or the concentration of benzene in the exhaust stream is more than 20 percent greater than the design value. If the carbon bed

regeneration interval is monitored, then the owner or operator shall record each occurrence when the vent stream continues to flow through the control device beyond the predetermined carbon bed regeneration time.

(10) If a carbon adsorber that is not regenerated directly on site in the control device is used, then the owner or operator shall maintain records of dates and times when the control device is monitored, when breakthrough is measured, and shall record the date and time then the existing carbon in the control device is replaced with fresh carbon.

(11) If an alternative operational or process parameter is monitored for a control device, as allowed in §61.354(e) of this subpart, then the owner or operator shall maintain records of the continuously monitored parameter, including periods when the device is not operated as designed.

(12) If a control device subject to the requirements of §61.349(a)(2)(iv) is used, then the owner or operator shall maintain records of the parameters that are monitored and each occurrence when the parameters monitored are outside the range of values specified in §61.349(a)(2)(iv)(C), or other records as specified by the Administrator.

(k) An owner or operator who elects to install and operate the control equipment in §61.351 of this subpart shall comply with the recordkeeping requirements in 40 CFR 60.115b.

(l) An owner or operator who elects to install and operate the control equipment in §61.352 of this subpart shall maintain records of the following:

(1) The date, location, and corrective action for each visual inspection required by 40 CFR 60.693–2(a)(5), during which a broken seal, gap, or other problem is identified that could result in benzene emissions.

(2) Results of the seal gap measurements required by 40 CFR 60.693–2(a).

(m) If a system is used for emission control that is maintained at a pressure less than atmospheric pressure with openings to provide dilution air, then the owner or operator shall maintain records of the monitoring device and records of all periods during which the pressure in the unit is operated at a pressure that is equal to or greater than atmospheric pressure.

(n) Each owner or operator using a total enclosure to comply with control requirements for tanks in §61.343 or the control requirements for containers in §61.345 must keep the records required in paragraphs (n)(1) and (2) of this section. Owners or operators may use records as required in 40 CFR 264.1089(b)(2)(iv) or 40 CFR 265.1090(b)(2)(iv) for a tank or as required in 40 CFR 264.1089(d)(1) or 40 CFR 265.1090(d)(1) for a container to meet the recordkeeping requirement in paragraph (n)(1) of this section. The owner or operator must make the records of each verification of a total enclosure available for inspection upon request.

(1) Records of the most recent set of calculations and measurements performed to verify that the enclosure meets the criteria of a permanent total enclosure as specified in “Procedure T—Criteria for and Verification of a Permanent or Temporary Total Enclosure” in 40 CFR 52.741, appendix B;

(2) Records required for a closed-vent system and control device according to the requirements in paragraphs (d) (f), and (j) of this section.

[55 FR 8346, Mar. 7, 1990; 55 FR 12444, Apr. 3, 1990; 55 FR 18331, May 2, 1990, as amended at 58 FR 3103, Jan. 7, 1993; 65 FR 62161, Oct. 17, 2000; 67 FR 68533, Nov. 12, 2002]

§ 61.357 Reporting requirements.

(a) Each owner or operator of a chemical plant, petroleum refinery, coke by-product recovery plant, and any facility managing wastes from these industries shall submit to the Administrator within 90 days after January 7, 1993, or by the initial startup for a new source with an initial startup after the effective date, a report that summarizes the regulatory status of each waste stream subject to §61.342 and is determined by the procedures specified in §61.355(c) to contain benzene. Each owner or operator subject to this subpart who has no benzene onsite in wastes, products, by-products, or intermediates shall submit an initial report that is a statement to this effect. For all other owners or operators subject to this subpart, the report shall include the following information:

(1) Total annual benzene quantity from facility waste determined in accordance with §61.355(a) of this subpart.

(2) A table identifying each waste stream and whether or not the waste stream will be controlled for benzene emissions in accordance with the requirements of this subpart.

(3) For each waste stream identified as not being controlled for benzene emissions in accordance with the requirements of this subpart the following information shall be added to the table:

(i) Whether or not the water content of the waste stream is greater than 10 percent;

(ii) Whether or not the waste stream is a process wastewater stream, product tank drawdown, or landfill leachate;

(iii) Annual waste quantity for the waste stream;

(iv) Range of benzene concentrations for the waste stream;

(v) Annual average flow-weighted benzene concentration for the waste stream; and

(vi) Annual benzene quantity for the waste stream.

(4) The information required in paragraphs (a) (1), (2), and (3) of this section should represent the waste stream characteristics based on current configuration and operating conditions. An owner or operator only needs to list in the report those waste streams that contact materials containing benzene. The report does not need to include a description of the controls to be installed to comply with the standard or other information required in §61.10(a).

(b) If the total annual benzene quantity from facility waste is less than 1 Mg/yr (1.1 ton/yr), then the owner or operator shall submit to the Administrator a report that updates the information listed in paragraphs (a)(1) through (a)(3) of this section whenever there is a change in the process generating the waste stream that could cause the total annual benzene quantity from facility waste to increase to 1 Mg/yr (1.1 ton/yr) or more.

(c) If the total annual benzene quantity from facility waste is less than 10 Mg/yr (11 ton/yr) but is equal to or greater than 1 Mg/yr (1.1 ton/yr), then the owner or operator shall submit to the Administrator a report that updates the information listed in paragraphs (a)(1) through (a)(3) of this section. The report shall be submitted annually and whenever there is a change in the process generating the waste stream that could cause the total annual benzene quantity from facility waste to increase to 10 Mg/yr (11 ton/yr) or more. If the information in the annual report required by paragraphs (a)(1) through (a)(3) of this section is not changed in the following year, the owner or operator may submit a statement to that effect.

(d) If the total annual benzene quantity from facility waste is equal to or greater than 10 Mg/yr (11 ton/yr), then the owner or operator shall submit to the Administrator the following reports:

(1) Within 90 days after January 7, 1993, unless a waiver of compliance under §61.11 of this part

is granted, or by the date of initial startup for a new source with an initial startup after the effective date, a certification that the equipment necessary to comply with these standards has been installed and that the required initial inspections or tests have been carried out in accordance with this subpart. If a waiver of compliance is granted under §61.11, the certification of equipment necessary to comply with these standards shall be submitted by the date the waiver of compliance expires.

(2) Beginning on the date that the equipment necessary to comply with these standards has been certified in accordance with paragraph (d)(1) of this section, the owner or operator shall submit annually to the Administrator a report that updates the information listed in paragraphs (a)(1) through (a)(3) of this section. If the information in the annual report required by paragraphs (a)(1) through (a)(3) of this section is not changed in the following year, the owner or operator may submit a statement to that effect.

(3) If an owner or operator elects to comply with the requirements of §61.342(c)(3)(ii), then the report required by paragraph (d)(2) of this section shall include a table identifying each waste stream chosen for exemption and the total annual benzene quantity in these exempted streams.

(4) If an owner or operator elects to comply with the alternative requirements of §61.342(d) of this subpart, then he shall include in the report required by paragraph (d)(2) of this section a table presenting the following information for each process wastewater stream:

(i) Whether or not the process wastewater stream is being controlled for benzene emissions in accordance with the requirements of this subpart;

(ii) For each process wastewater stream identified as not being controlled for benzene emissions in accordance with the requirements of this subpart, the table shall report the following information for the process wastewater stream as determined at the point of waste generation: annual waste quantity, range of benzene concentrations, annual average flow-weighted benzene concentration, and annual benzene quantity;

(iii) For each process wastewater stream identified as being controlled for benzene emissions in accordance with the requirements of this subpart, the table shall report the following information for the process wastewater stream as determined at the exit to the treatment process: Annual waste quantity, range of benzene concentrations, annual average flow-weighted benzene concentration, and annual benzene quantity.

(5) If an owner or operator elects to comply with the alternative requirements of §61.342(e), then the report required by paragraph (d)(2) of this section shall include a table presenting the following information for each waste stream:

(i) For each waste stream identified as not being controlled for benzene emissions in accordance with the requirements of this subpart; the table shall report the following information for the waste stream as determined at the point of waste generation: annual waste quantity, range of benzene concentrations, annual average flow-weighted benzene concentration, and annual benzene quantity;

(ii) For each waste stream identified as being controlled for benzene emissions in accordance with the requirements of this subpart; the table shall report the following information for the waste stream as determined at the applicable location described in §61.355(k)(2): Annual waste quantity, range of benzene concentrations, annual average flow-weighted benzene concentration, and annual benzene quantity.

(6) Beginning 3 months after the date that the equipment necessary to comply with these standards has been certified in accordance with paragraph (d)(1) of this section, the owner or operator shall submit quarterly to the Administrator a certification that all of the required inspections have been carried out in accordance with the requirements of this subpart.

(7) Beginning 3 months after the date that the equipment necessary to comply with these standards has been certified in accordance with paragraph (d)(1) of this section, the owner or operator shall submit a report quarterly to the Administrator that includes:

(i) If a treatment process or wastewater treatment system unit is monitored in accordance with §61.354(a)(1) of this subpart, then each period of operation during which the concentration of benzene in the monitored waste stream exiting the unit is equal to or greater than 10 ppmw.

(ii) If a treatment process or wastewater treatment system unit is monitored in accordance with §61.354(a)(2) of this subpart, then each 3-hour period of operation during which the average value of the monitored parameter is outside the range of acceptable values or during which the unit is not operating as designed.

(iii) If a treatment process or wastewater treatment system unit is monitored in accordance with §61.354(b), then each period of operation during which the flow-weighted annual average concentration of benzene in the monitored waste stream entering the unit is equal to or greater than 10 ppmw and/or the total annual benzene quantity is equal to or greater than 1.0 mg/yr.

(iv) For a control device monitored in accordance with §61.354(c) of this subpart, each period of operation monitored during which any of the following conditions occur, as applicable to the control device:

(A) Each 3-hour period of operation during which the average temperature of the gas stream in the combustion zone of a thermal vapor incinerator, as measured by the temperature monitoring device, is more than 28 °C (50 °F) below the design combustion zone temperature.

(B) Each 3-hour period of operation during which the average temperature of the gas stream immediately before the catalyst bed of a catalytic vapor incinerator, as measured by the temperature monitoring device, is more than 28 °C (50 °F) below the design gas stream temperature, and any 3-hour period during which the average temperature difference across the catalyst bed (i.e., the difference between the temperatures of the gas stream immediately before and after the catalyst bed), as measured by the temperature monitoring device, is less than 80 percent of the design temperature difference.

(C) Each 3-hour period of operation during which the average temperature of the gas stream in the combustion zone of a boiler or process heater having a design heat input capacity less than 44 MW (150 × 106 BTU/hr), as mesured by the temperature monitoring device, is more than 28 °C (50 °F) below the design combustion zone temperature.

(D) Each 3-hour period of operation during which the average concentration of organics or the average concentration of benzene in the exhaust gases from a carbon adsorber, condenser, or other vapor recovery system is more than 20 percent greater than the design concentration level of organics or benzene in the exhaust gas.

(E) Each 3-hour period of operation during which the temperature of the condenser exhaust vent stream is more than 6 °C (11 °F) above the design average exhaust vent stream temperature, or the temperature of the coolant fluid exiting the condenser is more than 6 °C (11 °F) above the design average coolant fluid temperature at the condenser outlet.

(F) Each period in which the pilot flame of a flare is absent.

(G) Each occurrence when there is a change in the location at which the vent stream is introduced into the flame zone of a boiler or process heater as required by §61.349(a)(2)(i)(C) of this subpart.

(H) Each occurrence when the carbon in a carbon adsorber system that is regenerated directly on site in the control device is not regenerated at the predetermined carbon bed regeneration time.

(I) Each occurrence when the carbon in a carbon adsorber system that is not regenerated directly on site in the control device is not replaced at the predetermined interval specified in §61.354(c) of this subpart.

(J) Each 3-hour period of operation during which the parameters monitored are outside the range of values specified in §61.349(a)(2)(iv)(C), or any other periods specified by the Administrator for a control device subject to the requirements of §61.349(a)(2)(iv).

(v) For a cover and closed-vent system monitored in accordance with §61.354(g), the owner or operator shall submit a report quarterly to the Administrator that identifies any period in which the pressure in the waste management unit is equal to or greater than atmospheric pressure.

(8) Beginning one year after the date that the equipment necessary to comply with these standards has been certified in accordance with paragraph (d)(1) of this section, the owner or operator shall submit annually to the Administrator a report that summarizes all inspections required by §§61.342 through 61.354 during which detectable emissions are measured or a problem (such as a broken seal, gap or other problem) that could result in benzone emissions is identified, including information about the repairs or corrective action taken.

(e) An owner or operator electing to comply with the provisions of §§61.351 or 61.352 of this subpart shall notify the Administrator of the alternative standard selected in the report required under §61.07 or §61.10 of this part.

(f) An owner or operator who elects to install and operate the control equipment in §61.351 of this subpart shall comply with the reporting requirements in 40 CFR 60.115b.

(g) An owner or operator who elects to install and operate the control equipment in §61.352 of this subpart shall submit initial and quarterly reports that identify all seal gap measurements, as required in 40 CFR 60.693–2(a), that are outside the prescribed limits.

[55 FR 8346, Mar. 7 1990; 55 FR 12444, Apr. 3, 1990, as amended at 55 FR 37231, Sept. 10, 1990; 58 FR 3105, Jan. 7, 1993; 65 FR 62161, Oct. 17, 2000]

§ 61.358 Delegation of authority.

(a) In delegating implementation and enforcement authority to a State under section 112(d) of the Clean Air Act, the authorities contained in paragraph (b) of this section shall be retained by the Administrator and not transferred to a State.

(b) Alternative means of emission limitation under §61.353 of this subpart will not be delegated to States.

§ 61.359 [Reserved]

Appendix A to Part 61

APPENDIX A

National Emission Standards for Hazardous Air Pollutants

Compliance Status Information

I. SOURCE REPORT

INSTRUCTIONS: Owners or operators of sources of hazardous pollutants subject to the National Emission Standards for Hazardous Air Pollutants are required to submit the information contained in Section I to the appropriate U.S. Environmental Protection Agency Regional Office prior to 90 days after the effective date of any standards or amendments which require the submission of such information.

A list of regional offices is provided in §61.04.

A. SOURCE INFORMATION

1. Identification/Location - Indicate the name and address of each source.

1 2 Region; 3 4 State; 5 8 County; 9 13 Source Number; 0 0 0 14 16; 0 0 17 18; 1 19

20 22 AQCR #; 23 26 City Code; 27 Source Name 46

47 Street Address (Location of Plant) 66; 80

Dup 1-18 19; 20 City Name 34; State 35 39

40 State Regis. Number 54; 55 58 NEDS X Ref.

59 SIC 62; FF 64; 8 A/P 65; 77 79 Staff; 80

Dup 1-18 5 19; CS 30; STP 31; EC 49; 80

2. Contact - Indicate the name and telephone number of the owner or operator or other responsible official whom EPA may contact concerning this report.

Dup 1-18 4 1 19 20; 21 Name 43

44 46 Area Code; 47 - Number 54; 80

3. Source Description - Briefly state the nature of the source (e.g., "Chlor-alkali Plant" or "Machine Shop").

Dup 1-18 4 2 19 20; 21 Description 50

51 Continued 79; 80

4. Alternative Mailing Address - Indicate an alternative mailing address if correspondence is to be directed to a location different than that specified above.

Dup 1-18 4 3 19 20; 21 Number Street or Box Number 45; 80

Dup 1-18 4 4 19 20; 21 City 35; 37 38 State; 41 Zip 44; 80

5. Compliance Status - The emissions from this source ___ can ___ cannot meet the emission limitations contained in the National Emission Standards on or prior to 90 days after the effective date of any standards or amendments which require the submission of such information.

Signature of Owner, Operator or Other Responsible Official

NOTE: If the emissions from the source will exceed those limits set by the National Emission Standards for Hazardous Air Pollutants, the source will be in violation and subject to Federal enforcement actions unless granted a waiver of compliance by the Administrator of the U.S. Environmental Protection Agency. The information needed for such waivers is listed in Section II of this form.

B. PROCESS INFORMATION. Part B should be completed separately for each point of emission for each hazardous pollutant. [Sources subject to 61.22(1) may omit number 4. below.]

Dup 1-13 14 16; 0 0 17 18; 5 19; 20 SCC 27; 28 29 NEDS X Ref; 30 LS; 31 SIP

1. Pollutant Emitted - Indicate the type of hazardous pollutant emitted by the process. Indicate "AB" for asbestos, "BE" for beryllium, or "HG" for mercury.

32 33 Pollutant | 34 Regulation 48 | 49 EC

2. Process Description - Provide a brief description of each process (e.g., "hydrogen end box" in a mercury chlor-alkali plant, "grinding machine" in a beryllium machine shop). Use additional sheets if necessary.

50 Process Description 74 | 80

Dup 1-18 6 1 19 20 21 50

51 79 80

Dup 1-18 6 2 19 20 21 50

51 79 80

3. Amount of Pollutant - Indicate the average weight of the hazardous material named in Item 1 which enters the process in pounds per month (based on the previous twelve months of operation).

Dup 1-18 6 3 19 20 | 21 27 | lbs./mo. 29 36 | 80

4. Control Devices
a. Indicate the type of pollution control devices, if any, used to reduce the emissions from the process (e.g., venturi scrubber, baghouse, wet cyclone) and the estimated percent of the pollutant which the device removes from the process gas stream.

Dup 1-18 6 4 19 20 | PRIMARY CONTROL DEVICE: 21 43

45 Primary Device Name 64 | 66 70 Percent Removal Efficiency | 72 79

80

Dup 1-18 6 5 19 20 | SECONDARY CONTROL DEVICES: 21 45

47 Secondary Device Name 64 | 66 70 Percent Removal Efficiency | % EFFIC. 72 79 | 80

b. Asbestos Emission Control Devices Only
i. If a baghouse is specified in Item 4a, give the following information:

- The air flow permeability in cubic feet per minute per square foot of fabric area.

  Air flow permeability = _____ cfm/ft^2

- The pressure drop in inches water gauge across the filter at which the baghouse is operated.

  Operating pressure drop = _____ inches w.g.

- If the baghouse material contains synthetic fill yarn, check whether this material is / / spun / / or not spun.

- If the baghouse utilizes a felted fabric, give the minimum thickness in inches and the density in ounces per square yard.

  Thickness = _____ inches Density = _____ oz/yd^2

ii. If a wet collection device is specified in Item 4a, give the designed unit contacting energy in inches water gauge.

- Unit contacting energy = _____ inches w.g.

C. DISPOSAL OF ASBESTOS-CONTAINING WASTES. Part C should be completed separately for each asbestos-containing waste generation operation arising from sources subject to §61.22(a), (c), (e), and (h).

Dup 1-13 14 16 | 0 0 17 18 | 5 19 | 20 SCC 27 | 28 29 NEDS X Ref | 30 CS | 31 SIP

A B 32 33 Pollutant | 34 Regulation 48 | 49 EC

1. Waste Generation - Provide a brief description of each process that generates asbestos-containing waste (e.g. disposal of control device wastes).

50 Process Description 79 80

2. Asbestos Concentration - Indicate the average percentage asbestos content of these materials.

Dup 1-18 6 1 ASBESTOS CONCENTRATION: 19 20 21 43 45 48

% 50 80

3. Amount of Wastes - Indicate the average weight of asbestos-containing wastes disposed of, measured in kg/day.

Dup 1-18 6 2 kg/day 19 20 21 27 29 34 80

4. Control Methods - Indicate the emission control methods used in all stages of waste disposal, from collection, processing, and packaging to transporting and deposition.

Dup 1-18 6 3 Primary Control Method 19 20 21 43

45 79 80

Dup 1-18 6 4 19 20 21 50

51 79 80

5. Waste Disposal - Indicate the type of disposal site (sanitary landfill, open, covered) or incineration site (municipal, private) where the waste is disposed of and who operates the site (company, private, municipal). State the name and location of the site (closest city or town, county, state).

Dup 1-18 6 5 TYPE OF SITE: 19 20 21 33 35 50

51 79 80

Dup 1-18 6 6 OPERATOR: 19 20 21 29 31 50

51 79 80

Dup 1-18 6 7 LOCATION: 19 20 21 29

31 70

71 79 80

D. WASTE DISPOSAL SITES. Part D should be completed separately for each asbestos waste disposal site subject to section 61.22(1).

Dup 1-13 D 0 5 14 16 17 18 19 20 SCC 27 28 29 30 31
NEDS X Ref CS SIP

A B 32 33 34 Regulation 48 49
Pollutant EC

WASTE DISPOSAL SITE 50 68 80

1. Description - Provide a brief description of the site, including its size and configuration, and the distance to the closest city or town, closest residence, and closest primary road.

Dup 1-18 6 1 SITE DESCRIPTION 19 20 21 37 39 50

51 79 80

Dup 1-18 6 2 DISTANCE: 19 20 21 29 TOWN: 30 34 36 40 K M 42 43

RESIDENCE: 45 54 56 60 K M 62 63 ROAD: 65 69 71 75

K M 77 78 80

2. Inactivation - After the site is inactivated, indicate the method or methods used to comply with the standard and send a list of the actions that will be undertaken to maintain the inactivated site.

Dup 1-18 6 8 COMPLIANCE METHOD/INACTIVE SITE:
19 20 21 52

54 79 80

II. Waiver Requests

A. *Waiver of Compliance.* Owners or operators of sources unable to operate in compliance with the National Emission Standards for Hazardous Air Pollutants prior to 90 days after the effective date of any standards or amendments which require the submission of such information may request a waiver of compliance from the Administrator of the U.S. Environmental Protection Agency for the time period necessary to install appropriate control devices or make modifications to achieve compliance. The Administrator may grant a waiver of compliance with the standard for a period not exceeding two years from the effective date of the hazardous pollutant standards, if he finds that such period is necessary for the installation of controls and that steps will be taken during the period of the waiver to assure that the health of persons will be protected from imminent endangerment.

The report information provided in Section I must accompany this application. Applications should be sent to the appropriate EPA regional office.

1. *Processes Involved* —Indicate the process or processes emitting hazardous pollutants to which emission controls are to be applied.

2. *Controls*

a. Describe the proposed type of control device to be added or modification to be made to the process to reduce the emission of hazardous pollutants to an acceptable level. (Use additional sheets if necessary.)

b. Describe the measures that will be taken during the waiver period to assure that the health of persons will be protected from imminent endangerment. (Use additional sheets if necessary.)

3. *Increments of Progress* —Specify the dates by which the following increments of progress will be met.

Date by which contracts for emission control systems or process modifications will be awarded; or date by which orders will be issued for the purchase of the component parts to accomplish emission control or process modification.

Dup 1-16 0 1 7
17 19 53 54 55 60 61 MO/DY/YR 66 80

Date of initiation of on-site construction or installation of emission control equipment or process change.

Dup 1-16 0 2 7
17 19 53 54 55 60 61 MO/DY/YR 66 80

Date by which on-site construction or installation of emission control equipment or process modification is to be completed.

Dup 1-16 0 3 7
17 19 53 54 55 60 61 MO/DY/YR 66 80

Date by which final compliance is to be achieved.

Dup 1-16 0 4 7
17 19 53 54 55 60 61 MO/DY/YR 66 80

B. *Waiver of Emission Tests.* A waiver of emission testing may be granted to owners or operators of sources subject to emmission testing if, in the judgment of the Administrator of the Environmental Protection Agency the emissions from the source comply with the appropriate standard or if the owners or operators of the source have requested a waiver of compliance or have been granted a waiver of compliance.

This application should accompany the report information provided in Section I.

1. *Reason* —State the reasons for requesting a waiver of emission testing. If the reason stated is that the emissions from the source are within the prescribed limits, documentation of this condition must be attached.

_____

_____

DateSignature of the owner or operator

(Sec. 114, of the Clean Air Act as amended (42 U.S.C. 7414))

[40 FR 48303, Oct. 14, 1975, as amended at 43 FR 8800, Mar. 3, 1978; 50 FR 46295, Sept. 9, 1985]

Appendix B to Part 61—Test Methods

Method 101—Determination of particulate and gaseous mercury emissions from chlor-alkali plants (air streams)

Method 101A—Determination of particulate and gaseous mercury emissions from sewage sludge incinerators

Method 102—Determination of particulate and gaseous mercury emissions from chlor-alkali plants (hydrogen streams)

Method 103—Beryllium screening method

Method 104—Determination of beryllium emissions from stationary sources

Method 105—Determination of mercury in wastewater treatment plant sewage sludges

Method 106—Determination of vinyl chloride emissions from stationary sources

Method 107—Determination of vinyl chloride content of in-process wastewater samples, and vinyl chloride content of polyvinyl chloride resin slurry, wet cake, and latex samples

Method 107A—Determination of vinyl chloride content of solvents, resin-solvent solution, polyvinyl chloride resin, resin slurry, wet resin, and latex samples

Method 108—Determination of particulate and gaseous arsenic emissions

Method 108A—Determination of arsenic content in ore samples from nonferrous smelters

Method 108B—Determination of arsenic content in ore samples from nonferrous smelters

Method 108C—Determination of arsenic content in ore samples from nonferrous smelters (molybdenum blue photometric procedure)

Method 111—Determination of Polonium—210 emissions from stationary sources

Method 101—Determination of Particulate and Gaseous Mercury Emissions From Chlor-Alkali Plants (Air Streams)

Note: This method does not include all of the specifications (*e.g.,* equipment and supplies) and procedures (*e.g.,* sampling and analytical) essential to its performance. Some material is

incorporated by reference from methods in appendix A to 40 CFR part 60. Therefore, to obtain reliable results, persons using this method should have a thorough knowledge of at least the following additional test methods: Method 1, Method 2, Method 3, and Method 5.

1.0 Scope and Application

1.1 Analytes.

Analyte	CAS No.	Sensitivity
Mercury (Hg)	7439–97–6	Dependent upon recorder and spectrophotometer.

1.2 Applicability. This method is applicable for the determination of Hg emissions, including both particulate and gaseous Hg, from chlor-alkali plants and other sources (as specified in the regulations) where the carrier-gas stream in the duct or stack is principally air.

1.3 Data Quality Objectives. Adherence to the requirements of this method will enhance the quality of the data obtained from air pollutant sampling methods.

2.0 Summary of Method

Particulate and gaseous Hg emissions are withdrawn isokinetically from the source and collected in acidic iodine monochloride (ICl) solution. The Hg collected (in the mercuric form) is reduced to elemental Hg, which is then aerated from the solution into an optical cell and measured by atomic absorption spectrophotometry.

3.0 Definitions[Reserved]

4.0 Interferences

4.1 Sample Collection. Sulfur dioxide (SO_2) reduces ICl and causes premature depletion of the ICl solution.

4.2 Sample Analysis.

4.2.1 ICl concentrations greater than 10^{-4}molar inhibit the reduction of the Hg (II) ion in the aeration cell.

4.2.2 Condensation of water vapor on the optical cell windows causes a positive interference.

5.0 Safety

5.1 Disclaimer. This method may involve hazardous materials, operations, and equipment. This test method does not purport to address all of the safety problems associated with its use. It is the responsibility of the user of this test method to establish appropriate safety and health practices and determine the applicability of regulatory limitations prior to performing this test method.

5.2 Corrosive Reagents. The following reagents are hazardous. Personal protective equipment and safe procedures are useful in preventing chemical splashes. If contact occurs, immediately flush with copious amounts of water for at least 15 minutes. Remove clothing under shower and decontaminate. Treat residual chemical burn as thermal burn.

5.2.1 Hydrochloric Acid (HCl). Highly toxic and corrosive. Causes severe damage to tissues. Vapors are highly irritating to eyes, skin, nose, and lungs, causing severe damage. May cause bronchitis, pneumonia, or edema of lungs. Exposure to concentrations of 0.13 to 0.2 percent can be lethal to humans in a few minutes. Provide ventilation to limit exposure. Reacts with metals, producing hydrogen gas.

5.2.2 Nitric Acid (HNO_3). Highly corrosive to eyes, skin, nose, and lungs. Vapors cause bronchitis, pneumonia, or edema of lungs. Reaction to inhalation may be delayed as long as 30 hours and still be fatal. Provide ventilation to limit exposure. Strong oxidizer. Hazardous reaction may occur with organic materials such as solvents.

5.2.3 Sulfuric Acid (H_2SO_4). Rapidly destructive to body tissue. Will cause third degree burns. Eye damage may result in blindness. Inhalation may be fatal from spasm of the larynx, usually within 30 minutes. 3 mg/m^3 will cause lung damage. 1 mg/m^3 for 8 hours will cause lung damage or, in higher concentrations, death. Provide ventilation to limit inhalation. Reacts violently with metals and organics.

6.0 Equipment and Supplies.

6.1 Sample Collection. A schematic of the sampling train used in performing this method is shown in Figure 101–1; it is similar to the Method 5 sampling train. The following items are required for sample collection:

6.1.1 Probe Nozzle, Pitot Tube, Differential Pressure Gauge, Metering System, Barometer, and Gas Density Determination Equipment. Same as Method 5, Sections 6.1.1.1, 6.1.1.3, 6.1.1.4, 6.1.1.9, 6.1.2, and 6.1.3, respectively.

6.1.2 Probe Liner. Borosilicate or quartz glass tubing. A heating system capable of maintaining a gas temperature of 120 ±14 °C (248 ±25 °F) at the probe exit during sampling may be used to prevent water condensation.

Note: Do not use metal probe liners.

6.1.3 Impingers. Four Greenburg-Smith impingers connected in series with leak-free ground glass fittings or any similar leak-free noncontaminating fittings. For the first, third, and fourth impingers, impingers that are modified by replacing the tip with a 13-mm ID (0.5-in.) glass tube extending to 13 mm (0.5 in.) from the bottom of the flask may be used.

6.1.4 Acid Trap. Mine Safety Appliances air line filter, Catalog number 81857, with acid absorbing cartridge and suitable connections, or equivalent.

6.2 Sample Recovery. The following items are needed for sample recovery:

6.2.1 Glass Sample Bottles. Leakless, with Teflon-lined caps, 1000- and 100-ml.

6.2.2 Graduated Cylinder. 250-ml.

6.2.3 Funnel and Rubber Policeman. To aid in transfer of silica gel to container; not necessary if silica gel is weighed in the field.

6.2.4 Funnel. Glass, to aid in sample recovery.

6.3 Sample Preparation and Analysis. The following items are needed for sample preparation and analysis:

6.3.1 Atomic Absorption Spectrophotometer. Perkin-Elmer 303, or equivalent, containing a hollow-cathode mercury lamp and the optical cell described in Section 6.3.2.

6.3.2 Optical Cell. Cylindrical shape with quartz end windows and having the dimensions shown in Figure 101–2. Wind the cell with approximately 2 meters (6 ft) of 24-gauge Nichrome wire, or equivalent, and wrap with fiberglass insulation tape, or equivalent; do not let the wires touch each other.

6.3.3 Aeration Cell. Constructed according to the specifications in Figure 101–3. Do not use a

glass frit as a substitute for the blown glass bubbler tip shown in Figure 101–3.

6.3.4 Recorder. Matched to output of the spectrophotometer described in Section 6.3.1.

6.3.5 Variable Transformer. To vary the voltage on the optical cell from 0 to 40 volts.

6.3.6 Hood. For venting optical cell exhaust.

6.3.7 Flow Metering Valve.

6.3.8 Rate Meter. Rotameter, or equivalent, capable of measuring to within 2 percent a gas flow of 1.5 liters/min (0.053 cfm).

6.3.9 Aeration Gas Cylinder. Nitrogen or dry, Hg-free air, equipped with a single-stage regulator.

6.3.10 Tubing. For making connections. Use glass tubing (ungreased ball and socket connections are recommended) for all tubing connections between the solution cell and the optical cell; do not use Tygon tubing, other types of flexible tubing, or metal tubing as substitutes. Teflon, steel, or copper tubing may be used between the nitrogen tank and flow metering valve (Section 6.3.7), and Tygon, gum, or rubber tubing between the flow metering valve and the aeration cell.

6.3.11 Flow Rate Calibration Equipment. Bubble flow meter or wet-test meter for measuring a gas flow rate of 1.5 ±0.1 liters/min (0.053 ±0.0035 cfm).

6.3.12 Volumetric Flasks. Class A with penny head standard taper stoppers; 100-, 250-, 500-, and 1000-ml.

6.3.13 Volumetric Pipets. Class A; 1-, 2-, 3-, 4-, and 5-ml.

6.3.14 Graduated Cylinder. 50-ml.

6.3.15 Magnetic Stirrer. General-purpose laboratory type.

6.3.16 Magnetic Stirring Bar. Teflon-coated.

6.3.17 Balance. Capable of weighing to ±0.5 g.

6.3.18 Alternative Analytical Apparatus. Alternative systems are allowable as long as they meet the following criteria:

6.3.18.1 A linear calibration curve is generated and two consecutive samples of the same aliquot size and concentration agree within 3 percent of their average.

6.3.18.2 A minimum of 95 percent of the spike is recovered when an aliquot of a source sample is spiked with a known concentration of Hg (II) compound.

6.3.18.3 The reducing agent should be added after the aeration cell is closed.

6.3.18.4 The aeration bottle bubbler should not contain a frit.

6.3.18.5 Any Tygon tubing used should be as short as possible and conditioned prior to use until blanks and standards yield linear and reproducible results.

6.3.18.6 If manual stirring is done before aeration, it should be done with the aeration cell closed.

6.3.18.7 A drying tube should not be used unless it is conditioned as the Tygon tubing above.

7.0 Reagents and Standards

Unless otherwise indicated, all reagents must conform to the specifications established by the Committee on Analytical Reagents of the American Chemical Society; where such specifications are not available, use the best available grade.

7.1 Sample Collection. The following reagents are required for sample collection:

7.1.1 Water. Deionized distilled, to conform to ASTM D 1193–77 or 91 (incorporated by reference—see §61.18), Type 1. If high concentrations of organic matter are not expected to be present, the analyst may eliminate the $KMnO_4$test for oxidizable organic matter. Use this water in all dilutions and solution preparations.

7.1.2 Nitric Acid, 50 Percent (v/v). Mix equal volumes of concentrated $HNO_3$and water, being careful to add the acid to the water slowly.

7.1.3 Silica Gel. Indicating type, 6- to 16-mesh. If previously used, dry at 175 °C (350 °F) for 2 hours. The tester may use new silica gel as received.

7.1.4 Potassium Iodide (KI) Solution, 25 Percent. Dissolve 250 g of KI in water, and dilute to 1 liter.

7.1.5 Iodine Monochloride Stock Solution, 1.0 M. To 800 ml of 25 percent KI solution, add 800 ml of concentrated HCl. Cool to room temperature. With vigorous stirring, slowly add 135 g of potassium iodate (KIO_3), and stir until all free iodine has dissolved. A clear orange-red solution occurs when all the KIO_3has been added. Cool to room temperature, and dilute to 1800 ml with water. Keep the solution in amber glass bottles to prevent degradation.

7.1.6 Absorbing Solution, 0.1 M ICl. Dilute 100 ml of the 1.0 M ICl stock solution to 1 liter with water. Keep the solution in amber glass bottles and in darkness to prevent degradation. This reagent is stable for at least two months.

7.2 Sample Preparation and Analysis. The following reagents and standards are required for sample preparation and analysis:

7.2.1 Reagents.

7.2.1.1 Tin (II) Solution. Prepare fresh daily, and keep sealed when not being used. Completely dissolve 20 g of tin (II) chloride (or 25 g of tin (II) sulfate) crystals (Baker Analyzed reagent grade or any other brand that will give a clear solution) in 25 ml of concentrated HCl. Dilute to 250 ml with water. Do not substitute HNO_3, H_2SO_4, or other strong acids for the HCl.

7.2.1.2 Sulfuric Acid, 5 Percent (v/v). Dilute 25 ml of concentrated $H_2SO_4$to 500 ml with water.

7.2.2 Standards

7.2.2.1 Hg Stock Solution, 1 mg Hg/ml. Prepare and store all Hg standard solutions in borosilicate glass containers. Completely dissolve 0.1354 g of Hg (II) chloride in 75 ml of water in a 100-ml glass volumetric flask. Add 10 ml of concentrated HNO_3, and adjust the volume to exactly 100 ml with water. Mix thoroughly. This solution is stable for at least one month.

7.2.2.2 Intermediate Hg Standard Solution, 10 µg Hg/ml. Prepare fresh weekly. Pipet 5.0 ml of the Hg stock solution (Section 7.2.2.1) into a 500-ml glass volumetric flask, and add 20 ml of the 5 percent H_2SO_4solution. Dilute to exactly 500 ml with water. Thoroughly mix the solution.

7.2.2.3 Working Hg Standard Solution, 200 ng Hg/ml. Prepare fresh daily. Pipet 5.0 ml of the intermediate Hg standard solution (Section 7.2.2.2) into a 250-ml volumetric glass flask. Add 10 ml of the 5 percent $H_2SO_4$and 2 ml of the 0.1 M ICl absorbing solution taken as a blank (Section 8.7.4.3), and dilute to 250 ml with water. Mix thoroughly.

8.0 Sample Collection, Preservation, Transport, and Storage

Because of the complexity of this method, testers should be trained and experienced with the test procedures to ensure reliable results. Since the amount of Hg that is collected generally is small, the method must be carefully applied to prevent contamination or loss of sample.

8.1 Pretest Preparation. Follow the general procedure outlined in Method 5, Section 8.1, except omit Sections 8.1.2 and 8.1.3.

8.2 Preliminary Determinations. Follow the general procedure outlined in Method 5, Section 8.2, with the exception of the following:

8.2.1 Select a nozzle size based on the range of velocity heads to assure that it is not necessary to change the nozzle size in order to maintain isokinetic sampling rates below 28 liters/min (1.0 cfm).

8.2.2 Perform test runs such that samples are obtained over a period or periods that accurately determine the maximum emissions that occur in a 24-hour period. In the case of cyclic operations, run sufficient tests for the accurate determination of the emissions that occur over the duration of the cycle. A minimum sample time of 2 hours is recommended. In some instances, high Hg or high SO_2concentrations make it impossible to sample for the desired minimum time. This is indicated by reddening (liberation of free iodine) in the first impinger. In these cases, the sample run may be divided into two or more subruns to ensure that the absorbing solution is not depleted.

8.3 Preparation of Sampling Train.

8.3.1 Clean all glassware (probe, impingers, and connectors) by rinsing with 50 percent HNO_3, tap water, 0.1 M ICl, tap water, and finally deionized distilled water. Place 100 ml of 0.1 M ICl in each of the first three impingers. Take care to prevent the absorbing solution from contacting any greased surfaces. Place approximately 200 g of preweighed silica gel in the fourth impinger. More silica gel may be used, but care should be taken to ensure that it is not entrained and carried out from the impinger during sampling. Place the silica gel container in a clean place for later use in the sample recovery. Alternatively, determine and record the weight of the silica gel plus impinger to the nearest 0.5 g.

8.3.2 Install the selected nozzle using a Viton A O-ring when stack temperatures are less than 260 °C (500 °F). Use a fiberglass string gasket if temperatures are higher. See APTD–0576 (Reference 3 in Method 5) for details. Other connecting systems using either 316 stainless steel or Teflon ferrules may be used. Mark the probe with heat-resistant tape or by some other method to denote the proper distance into the stack or duct for each sampling point.

8.3.3 Assemble the train as shown in Figure 101–1, using (if necessary) a very light coat of silicone grease on all ground glass joints. Grease only the outer portion (see APTD–0576) to avoid the possibility of contamination by the silicone grease.

Note: An empty impinger may be inserted between the third impinger and the silica gel to remove excess moisture from the sample stream.

8.3.4 After the sampling train has been assembled, turn on and set the probe heating system, if applicable, at the desired operating temperature. Allow time for the temperatures to stabilize. Place crushed ice around the impingers.

8.4 Leak-Check Procedures. Follow the leak-check procedures outlined in Method 5, Section 8.4.

8.5 Sampling Train Operation. Follow the general procedure outlined in Method 5, Section 8.5.

For each run, record the data required on a data sheet such as the one shown in Figure 101–4.

8.6 Calculation of Percent Isokinetic. Same as Method 5, Section 8.6.

8.7 Sample Recovery. Begin proper cleanup procedure as soon as the probe is removed from the stack at the end of the sampling period.

8.7.1 Allow the probe to cool. When it can be safely handled, wipe off any external particulate matter near the tip of the probe nozzle, and place a cap over it. Do not cap off the probe tip tightly while the sampling train is cooling. Capping would create a vacuum and draw liquid out from the impingers.

8.7.2 Before moving the sampling train to the cleanup site, remove the probe from the train, wipe off the silicone grease, and cap the open outlet of the probe. Be careful not to lose any condensate that might be present. Wipe off the silicone grease from the impinger. Use either ground-glass stoppers, plastic caps, or serum caps to close these openings.

8.7.3 Transfer the probe and impinger assembly to a cleanup area that is clean, protected from the wind, and free of Hg contamination. The ambient air in laboratories located in the immediate vicinity of Hg-using facilities is not normally free of Hg contamination.

8.7.4 Inspect the train before and during disassembly, and note any abnormal conditions. Treat the samples as follows.

8.7.4.1 Container No. 1 (Impingers and Probe).

8.7.4.1.1 Using a graduated cylinder, measure the liquid in the first three impingers to within 1 ml. Record the volume of liquid present (*e.g.,* see Figure 5–6 of Method 5). This information is needed to calculate the moisture content of the effluent gas. (Use only glass storage bottles and graduated cylinders that have been precleaned as in Section 8.3.1) Place the contents of the first three impingers into a 1000-ml glass sample bottle.

8.7.4.1.2 Taking care that dust on the outside of the probe or other exterior surfaces does not get into the sample, quantitatively recover the Hg (and any condensate) from the probe nozzle, probe fitting, and probe liner as follows: Rinse these components with two 50-ml portions of 0.1 M ICl. Next, rinse the probe nozzle, fitting and liner, and each piece of connecting glassware between the probe liner and the back half of the third impinger with a maximum of 400 ml of water. Add all washings to the 1000-ml glass sample bottle containing the liquid from the first three impingers.

8.7.4.1.3 After all washings have been collected in the sample container, tighten the lid on the container to prevent leakage during shipment to the laboratory. Mark the height of the liquid to determine later whether leakage occurred during transport. Label the container to identify clearly its contents.

8.7.4.2 Container No. 2 (Silica Gel). Same as Method 5, Section 8.7.6.3.

8.7.4.3 Container No. 3 (Absorbing Solution Blank). Place 50 ml of the 0.1 M ICl absorbing solution in a 100-ml sample bottle. Seal the container. Use this blank to prepare the working Hg standard solution (Section 7.2.2.3).

9.0 Quality Control

9.1 Miscellaneous Quality Control Measures.

Section	Quality control measure	Effect
8.4 10.2	Sampling equipment leak-checks and	Ensure accuracy and precision of sampling

	calibration	measurements.
10.5, 10.6	Spectrophotometer calibration	Ensure linearity of spectrophotometer response to standards.
11.3.3	Check for matrix effects	Eliminate matrix effects.

9.2 Volume Metering System Checks. Same as Method 5, Section 9.2.

10.0 Calibration and Standardizations

Note: Maintain a laboratory log of all calibrations.

10.1 Before use, clean all glassware, both new and used, as follows: brush with soap and tap water, liberally rinse with tap water, soak for 1 hour in 50 percent HNO_3, and then rinse with deionized distilled water.

10.2 Sampling Equipment. Calibrate the sampling equipment according to the procedures outlined in the following sections of Method 5: Section 10.1 (Probe Nozzle), Section 10.2 (Pitot Tube Assembly), Section 10.3 (Metering System), Section 10.5 (Temperature Sensors), Section 10.6 (Barometer).

10.3 Aeration System Flow Rate Meter. Assemble the aeration system as shown in Figure 101–5. Set the outlet pressure on the aeration gas cylinder regulator to a minimum pressure of 500 mm Hg (10 psi), and use the flow metering valve and a bubble flowmeter or wet-test meter to obtain a flow rate of 1.5 ±0.1 liters/min (0.053 ±0.0035 cfm) through the aeration cell. After the calibration of the aeration system flow rate meter is complete, remove the bubble flowmeter from the system.

10.4 Optical Cell Heating System. Using a 50-ml graduated cylinder, add 50 ml of water to the bottle section of the aeration cell, and attach the bottle section to the bubbler section of the cell. Attach the aeration cell to the optical cell and while aerating at 1.5 ±0.1 liters/min (0.053 ±0.0035 cfm), determine the minimum variable transformer setting necessary to prevent condensation of moisture in the optical cell and in the connecting tubing. (This setting should not exceed 20 volts.)

10.5 Spectrophotometer and Recorder.

10.5.1 The Hg response may be measured by either peak height or peak area.

Note: The temperature of the solution affects the rate at which elemental Hg is released from a solution and, consequently, it affects the shape of the absorption curve (area) and the point of maximum absorbance (peak height). Therefore, to obtain reproducible results, bring all solutions to room temperature before use.

10.5.2 Set the spectrophotometer wavelength at 253.7 nm, and make certain the optical cell is at the minimum temperature that will prevent water condensation. Then set the recorder scale as follows: Using a 50-ml graduated cylinder, add 50 ml of water to the aeration cell bottle. Add three drops of Antifoam B to the bottle, and then pipet 5.0 ml of the working Hg standard solution into the aeration cell.

Note: Always add the Hg-containing solution to the aeration cell after the 50 ml of water.

10.5.3 Place a Teflon-coated stirring bar in the bottle. Before attaching the bottle section to the bubbler section of the aeration cell, make certain that (1) the aeration cell exit arm stopcock (Figure 101–3) is closed (so that Hg will not prematurely enter the optical cell when the reducing agent is being added) and (2) there is no flow through the bubbler. If conditions (1) and (2) are met, attach the bottle section to the bubbler section of the aeration cell. Pipet 5 ml of tin (II) reducing solution into the aeration cell through the side arm, and immediately stopper the side

arm. Stir the solution for 15 seconds, turn on the recorder, open the aeration cell exit arm stopcock, and immediately initiate aeration with continued stirring. Determine the maximum absorbance of the standard, and set this value to read 90 percent of the recorder full scale.

10.6 Calibration Curve.

10.6.1 After setting the recorder scale, repeat the procedure in Section 10.5 using 0.0-, 1.0-, 2.0-, 3.0-, 4.0-, and 5.0-ml aliquots of the working standard solution (final amount of Hg in the aeration cell is 0, 200, 400, 600, 800, and 1000 ng, respectively). Repeat this procedure on each aliquot size until two consecutive peaks agree within 3 percent of their average value.

Note: To prevent Hg carryover from one sample to another, do not close the aeration cell from the optical cell until the recorder pen has returned to the baseline.)

10.6.2 It should not be necessary to disconnect the aeration gas inlet line from the aeration cell when changing samples. After separating the bottle and bubbler sections of the aeration cell, place the bubbler section into a 600-ml beaker containing approximately 400 ml of water. Rinse the bottle section of the aeration cell with a stream of water to remove all traces of the tin (II) reducing agent. Also, to prevent the loss of Hg before aeration, remove all traces of the reducing agent between samples by washing with water. It will be necessary, however, to wash the aeration cell parts with concentrated HCl if any of the following conditions occur: (1) A white film appears on any inside surface of the aeration cell, (2) the calibration curve changes suddenly, or (3) the replicate samples do not yield reproducible results.

10.6.3 Subtract the average peak height (or peak area) of the blank (0.0-ml aliquot)—which must be less than 2 percent of recorder full scale—from the averaged peak heights of the 1.0-, 2.0-, 3.0-, 4.0-, and 5.0-ml aliquot standards. If the blank absorbance is greater than 2 percent of full-scale, the probable cause is Hg contamination of a reagent or carry-over of Hg from a previous sample. Prepare the calibration curve by plotting the corrected peak height of each standard solution versus the corresponding final total Hg weight in the aeration cell (in ng), and draw the best fit straight line. This line should either pass through the origin or pass through a point no further from the origin than ±2 percent of the recorder full scale. If the line does not pass through or very near to the origin, check for nonlinearity of the curve and for incorrectly prepared standards.

11.0 Analytical Procedure

11.1 Sample Loss Check. Check the liquid level in each container to see whether liquid was lost during transport. If a noticeable amount of leakage occurred, either void the sample or use methods subject to the approval of the Administrator to account for the losses.

11.2 Sample Preparation. Treat each sample as follows:

11.2.1 Container No. 1 (Impingers and Probe). Carefully transfer the contents of Container No. 1 into a 1000-ml volumetric flask, and adjust the volume to exactly 1000 ml with water.

11.2.2 Dilutions. Pipet a 2-ml aliquot from the diluted sample from Section 11.2.1 into a 250-ml volumetric flask. Add 10 ml of 5 percent H_2SO_4, and adjust the volume to exactly 250 ml with water. This solution is stable for at least 72 hours.

Note: The dilution factor will be 250/2 for this solution.

11.3 Analysis. Calibrate the analytical equipment and develop a calibration curve as outlined in Sections 10.3 through 10.6.

11.3.1 Mercury Samples. Repeat the procedure used to establish the calibration curve with an appropriately sized aliquot (1 to 5 ml) of the diluted sample (from Section 11.2.2) until two

consecutive peak heights agree within 3 percent of their average value. The peak maximum of an aliquot (except the 5-ml aliquot) must be greater than 10 percent of the recorder full scale. If the peak maximum of a 1.0-ml aliquot is off scale on the recorder, further dilute the original source sample to bring the Hg concentration into the calibration range of the spectrophotometer.

11.3.2 Run a blank and standard at least after every five samples to check the spectrophotometer calibration. The peak height of the blank must pass through a point no further from the origin than ±2 percent of the recorder full scale. The difference between the measured concentration of the standard (the product of the corrected peak height and the reciprocal of the least squares slope) and the actual concentration of the standard must be less than 7 percent, or recalibration of the analyzer is required.

11.3.3 Check for Matrix Effects (optional). Use the Method of Standard Additions as follows to check at least one sample from each source for matrix effects on the Hg results. The Method of Standard Additions procedures described on pages 9–4 and 9–5 of the section entitled "General Information" of the Perkin Elmer Corporation Atomic Absorption Spectrophotometry Manual, Number 303–0152 (Reference 16 in Section 16.0) are recommended. If the results of the Method of Standard Additions procedure used on the single source sample do not agree to within ±5 percent of the value obtained by the routine atomic absorption analysis, then reanalyze all samples from the source using the Method of Standard Additions procedure.

11.4 Container No. 2 (Silica Gel). Weigh the spent silica gel (or silica gel plus impinger) to the nearest 0.5 g using a balance. (This step may be conducted in the field.)

12.0 Data Analysis and Calculations

Carry out calculations, retaining at least one extra decimal significant figure beyond that of the acquired data. Round off figures only after the final calculation. Other forms of the equations may be used as long as they give equivalent results.

12.1 Average Dry Gas Meter Temperature and Average Orifice Pressure Drop, Dry Gas Volume, Volume of Water Vapor Condensed, Moisture Content, and Isokinetic Variation. Same as Method 5, Sections 12.2 through 12.5 and 12.11, respectively.

12.2 Stack Gas Velocity. Using the data from this test and Equation 2–9 of Method 2, calculate the average stack gas velocity v_s.

12.3 Total Mercury.

12.3.1 For each source sample, correct the average maximum absorbance of the two consecutive samples whose peak heights agree within 3 percent of their average for the contribution of the solution blank (see Section 10.6.3). Use the calibration curve and these corrected averages to determine the final total weight of Hg in ng in the aeration cell for each source sample.

12.3.2 Correct for any dilutions made to bring the sample into the working range of the spectrophotometer. Then calculate the Hg in the original solution, m_{Hg}, as follows:

$$m_{Hg} = \left[C_{Hg(AC)}(DF)(V_f)(10^{-3})\right]/S \qquad \text{Eq. 101-1}$$

Where:

CHg(AC)= Total ng of Hg in aliquot analyzed (reagent blank subtracted).

DF = Dilution factor for the Hg-containing solution (before adding to the aeration cell; *e.g.,* DF = 250/2 if the source samples were diluted as described in Section 11.2.2).

V_f= Solution volume of original sample, 1000 ml for samples diluted as described in Section 11.2.1.

10^{-3}= Conversion factor, µg/ng.

S = Aliquot volume added to aeration cell, ml.

12.4 Mercury Emission Rate. Calculate the daily Hg emission rate, R, using Equation 101–2. For continuous operations, the operating time is equal to 86,400 seconds per day. For cyclic operations, use only the time per day each stack is in operation. The total Hg emission rate from a source will be the summation of results from all stacks.

$$R = \frac{K m_{Hg} V_s A_s \left(86,400 \times 10^{-6}\right)}{\left[V_{m(std)} + V_{w(std)}\right]\left(T_s / P_s\right)} \qquad \text{Eq. 101-2}$$

Where:

K_1= 0.3858 °K/mm Hg for metric units.

K_1= 17.64 °R/in. Hg for English units.

K_3= 10^{-6}g/µg for metric units.

= 2.2046 “ × 10^{-9}lb/µg for English units.

P_s= Absolute stack gas pressure, mm Hg (in. Hg).

t = Daily operating time, sec/day.

T_s= Absolute average stack gas temperature, °K (°R).

Vm(std)= Dry gas sample volume at standard conditions, scm (scf).

Vw(std)= Volume of water vapor at standard conditions, scm (scf).

12.5 Determination of Compliance. Each performance test consists of three repetitions of the applicable test method. For the purpose of determining compliance with an applicable national emission standard, use the average of the results of all repetitions.

13.0 Method Performance

The following estimates are based on collaborative tests, wherein 13 laboratories performed duplicate analyses on two Hg-containing samples from a chlor-alkali plant and on one laboratory-prepared sample of known Hg concentration. The sample concentrations ranged from 2 to 65 µg Hg/ml.

13.1 Precision. The estimated intra-laboratory and inter-laboratory standard deviations are 1.6 and 1.8 µg Hg/ml, respectively.

13.2 Accuracy. The participating laboratories that analyzed a 64.3 µg Hg/ml (in 0.1 M ICl) standard obtained a mean of 63.7 µg Hg/ml.

13.3 Analytical Range. After initial dilution, the range of this method is 0.5 to 120 µg Hg/ml. The upper limit can be extended by further dilution of the sample.

14.0 Pollution Prevention.[Reserved]

15.0 Waste Management.[Reserved]

16.0 References

Same as Method 5, Section 17.0, References 1–3, 5, and 6, with the addition of the following:

1. Determining Dust Concentration in a Gas Stream. ASME Performance Test Code No. 27. New York, NY. 1957.

2. DeVorkin, Howard, *et al.* Air Pollution Source Testing Manual. Air Pollution Control District. Los Angeles, CA. November 1963.

3. Hatch, W.R., and W.I. Ott. Determination of Sub-Microgram Quantities of Mercury by Atomic Absorption Spectrophotometry. Anal. Chem. 40:2085–87. 1968.

4. Mark, L.S. Mechanical Engineers' Handbook. McGraw-Hill Book Co., Inc. New York, NY. 1951.

5. Western Precipitation Division of Joy Manufacturing Co. Methods for Determination of Velocity, Volume, Dust and Mist Content of Gases. Bulletin WP–50. Los Angeles, CA. 1968.

6. Perry, J.H. Chemical Engineers' Handbook. McGraw-Hill Book Co., Inc. New York, NY. 1960.

7. Shigehara, R.T., W.F. Todd, and W.S. Smith. Significance of Errors in Stack Sampling Measurements. Stack Sampling News. *1* (3):6–18. September 1973.

8. Smith, W.S., R.T. Shigehara, and W.F. Todd. A Method of Interpreting Stack Sampling Data. Stack Sampling News. *1* (2):8–17. August 1973.

9. Standard Method for Sampling Stacks for Particulate Matter. In: 1971 Annual Book of ASTM Standards, Part 23. ASTM Designation D 2928–71. Philadelphia, PA 1971.

10. Vennard, J.K. Elementary Fluid Mechanics. John Wiley and Sons, Inc. New York. 1947.

11. Mitchell, W.J. and M.R. Midgett. Improved Procedure for Determining Mercury Emissions from Mercury Cell Chlor-Alkali Plants. J. APCA. *26* :674–677. July 1976.

12. Shigehara, R.T. Adjustments in the EPA Nomograph for Different Pitot Tube Coefficients and Dry Molecular Weights. Stack Sampling News. *2* :4–11. October 1974.

13. Vollaro, R.F. Recommended Procedure for Sample Traverses in Ducts Smaller than 12 Inches in Diameter. U.S. Environmental Protection Agency, Emission Measurement Branch. Research Triangle Park, NC. November 1976.

14. Klein, R. and C. Hach. Standard Additions: Uses and Limitation in Spectrophotometric Measurements. Amer. Lab. *9* :21. 1977.

15. Perkin Elmer Corporation. Analytical Methods for Atomic Absorption Spectrophotometry. Norwalk, Connecticut. September 1976.

17.0 Tables, Diagrams, Flowcharts, and Validation Data

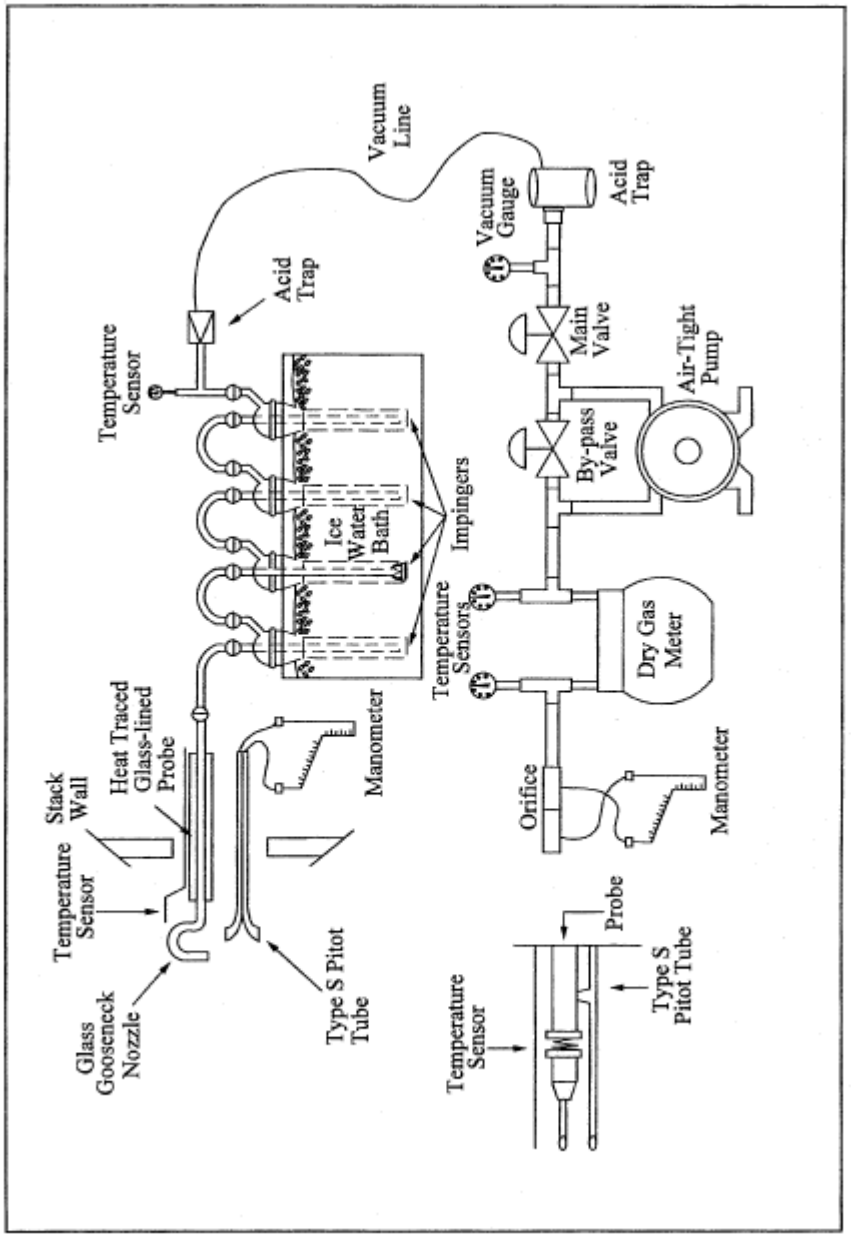

Figure 101-1. Mercury Sampling Train.

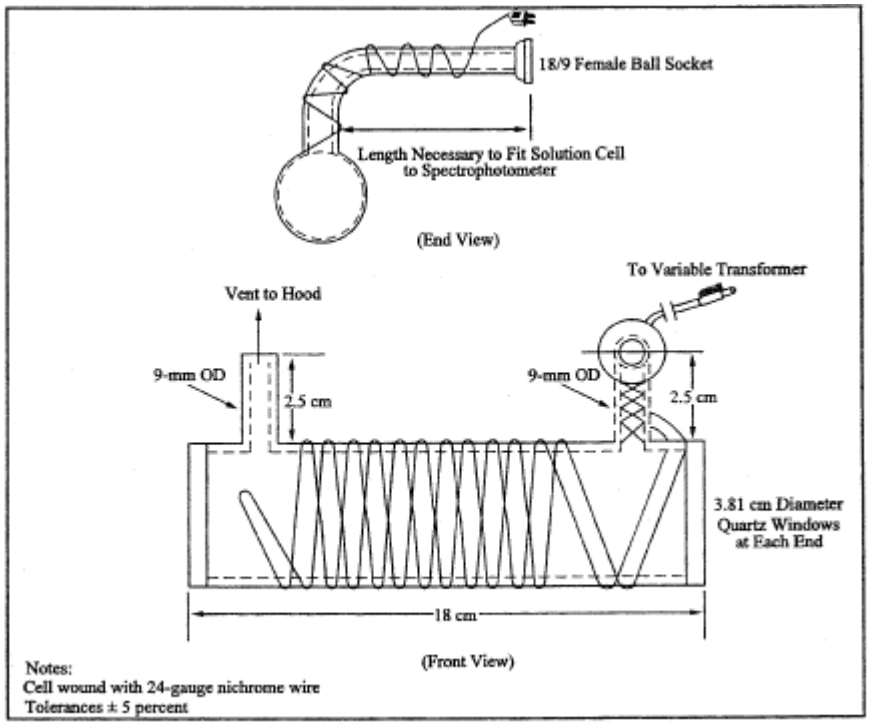

Figure 101-2. Optical Cell.

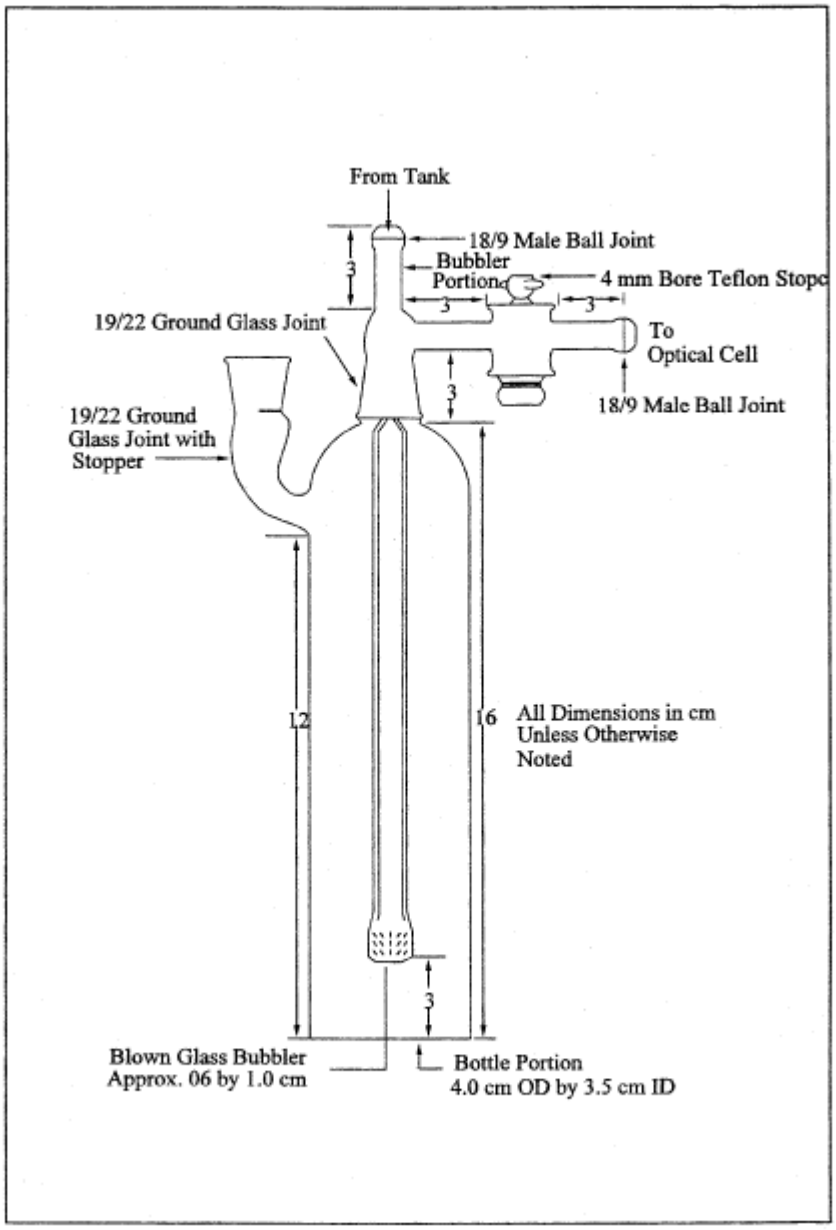

Figure 101-3. Aeration Cell.

Plant _____
Location _____
Operator _____
Date _____
Run No. _____
Sample box No. _____
Filter box No. _____
Meter H@ _____
C factor _____
Pitot tube coefficient, C_p _____

SCHEMATIC OF STACK CROSS SECTION

Ambient temperature _____
Barometric pressure _____
Assumed moisture, % _____
Probe length, (ft.) _____
Nozzle identification No. _____
Average calibrated nozzle diameter, (in.) _____
Probe heater setting _____
Leak rate, (cfm) _____
Probe liner material _____
Static pressure, (in. Hg) _____
Filter No. _____

Traverse point number	Sampling time	Vacuum	Stack temperature	Velocity head	Pressure differential across orifice meter	Gas meter reading	Gas sample temperature at dry gas meter		Filter holder* temperature	Temperature of gas leaving condenser or last impinger
							Inlet	Outlet		
	min.	(in.Hg)	(T_s) (°F)	(ΔP_s) (in. H_2O)	(in. H_2O)	(ft^3)	(°F)	(°F)	(°F)	(°F)
Total							Avg.	Avg.		
Average							Avg.			

* If Applicable

Figure 101-4. Mercury Field Data.

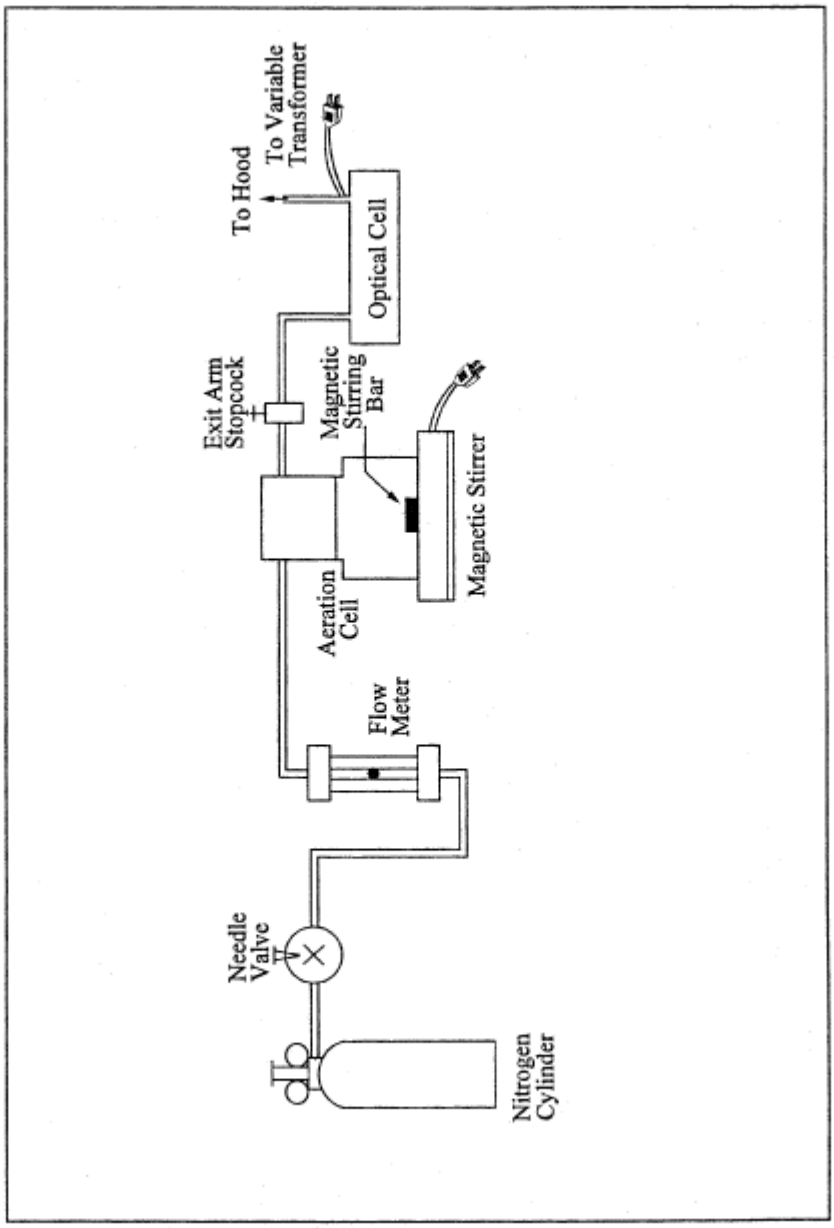

Figure 101-5. Schematic of Aeration System.

Method 101A—Determination of Particulate and Gaseous Mercury Emissions From Sewage Sludge Incinerators

Note: This method does not include all of the specifications (*e.g.,* equipment and supplies) and procedures (*e.g.,* sampling and analytical) essential to its performance. Some material is incorporated by reference from methods in appendix A to 40 CFR part 60 and in this part. Therefore, to obtain reliable results, persons using this method should also have a thorough knowledge of at least the following additional test methods: Methods 1, Method 2, Method 3, and Method 5 of part 60 (appendix A), and Method 101 part 61 (appendix B).

1.0 Scope and Application

1.1 Analytes.

Analyte	CAS No.	Sensitivity
Mercury (Hg)	7439–97–6	Dependent upon spectrophotometer and recorder.

1.2 Applicability. This method is applicable for the determination of Hg emissions from sewage sludge incinerators and other sources as specified in an applicable subpart of the regulations.

1.3 Data Quality Objectives. Adherence to the requirements of this method will enhance the quality of the data obtained from air pollutant sampling methods.

2.0 Summary of Method

2.1 Particulate and gaseous Hg emissions are withdrawn isokinetically from the source and are collected in acidic potassium permanganate ($KMnO_4$) solution. The Hg collected (in the mercuric form) is reduced to elemental Hg, which is then aerated from the solution into an optical cell and measured by atomic absorption spectrophotometry.

3.0 Definitions.[Reserved]

4.0 Interferences

4.1 Sample Collection. Excessive oxidizable organic matter in the stack gas prematurely depletes the $KMnO_4$solution and thereby prevents further collection of Hg.

4.2 Analysis. Condensation of water vapor on the optical cell windows causes a positive interference.

5.0 Safety

5.1 Disclaimer. This method may involve hazardous materials, operations, and equipment. This test method may not address all of the safety problems associated with its use. It is the responsibility of the user of this test method to establish appropriate safety and health practices and determine the applicability of regulatory limitations prior to performing this test method.

5.2 Corrosive Reagents. The following reagents are hazardous. Personal protective equipment and safe procedures are useful in preventing chemical splashes. If contact occurs, immediately flush with copious amounts of water for at least 15 minutes. Remove clothing under shower and decontaminate. Treat residual chemical burns as thermal burns.

5.2.1 Hydrochloric Acid (HCl). Highly toxic. Vapors are highly irritating to eyes, skin, nose, and lungs, causing severe damage. May cause bronchitis, pneumonia, or edema of lungs. Exposure to concentrations of 0.13 to 0.2 percent can be lethal to humans in a few minutes. Provide ventilation to limit exposure. Reacts with metals, producing hydrogen gas.

5.2.2 Nitric Acid (HNO_3). Highly corrosive to eyes, skin, nose, and lungs. Vapors cause bronchitis, pneumonia, or edema of lungs. Reaction to inhalation may be delayed as long as 30 hours and still be fatal. Provide ventilation to limit exposure. Strong oxidizer. Hazardous reaction may occur with organic materials such as solvents.

5.2.3 Sulfuric acid (H_2SO_4). Rapidly destructive to body tissue. Will cause third degree burns. Eye damage may result in blindness. Inhalation may be fatal from spasm of the larynx, usually within 30 minutes. May cause lung tissue damage with edema. 3 mg/m^3 will cause lung damage in uninitiated. 1 mg/m^3 for 8 hours will cause lung damage or, in higher concentrations, death. Provide ventilation to limit inhalation. Reacts violently with metals and organics.

5.3 Chlorine Evolution. Hydrochloric acid reacts with $KMnO_4$to liberate chlorine gas. Although this is a minimal concern when small quantities of HCl (5–10 ml) are used in the impinger rinse, a potential safety hazard may still exist. At sources that emit higher concentrations of oxidizable materials (*e.g.,* power plants), more HCl may be required to remove the larger amounts of brown deposit formed in the impingers. In such cases, the potential safety hazards due to sample container pressurization are greater, because of the larger volume of HCl rinse added to the recovered sample. These hazards are eliminated by storing and analyzing the HCl impinger wash separately from the permanganate impinger sample.

6.0 Equipment and Supplies

6.1 Sample Collection and Sample Recovery. Same as Method 101, Sections 6.1 and 6.2, respectively, with the following exceptions:

6.1.1 Probe Liner. Same as in Method 101, Section 6.1.2, except that if a filter is used ahead of the impingers, the probe heating system must be used to minimize the condensation of gaseous Hg.

6.1.2 Filter Holder (Optional). Borosilicate glass with a rigid stainless-steel wire-screen filter support (do not use glass frit supports) and a silicone rubber or Teflon gasket, designed to provide a positive seal against leakage from outside or around the filter. The filter holder must be equipped with a filter heating system capable of maintaining a temperature around the filter holder of 120 ±14 °C (248 ±25 °F) during sampling to minimize both water and gaseous Hg condensation. A filter may also be used in cases where the stream contains large quantities of particulate matter.

6.2 Sample Analysis. Same as Method 101, Section 6.3, with the following additions and exceptions:

6.2.1 Volumetric Pipets. Class A; 1-, 2-, 3-, 4-, 5-, 10-, and 20-ml.

6.2.2 Graduated Cylinder. 25-ml.

6.2.3 Steam Bath.

6.2.4 Atomic Absorption Spectrophotometer or Equivalent. Any atomic absorption unit with an open sample presentation area in which to mount the optical cell is suitable. Instrument settings recommended by the particular manufacturer should be followed. Instruments designed specifically for the measurement of mercury using the cold-vapor technique are commercially available and may be substituted for the atomic absorption spectrophotometer.

6.2.5 Optical Cell. Alternatively, a heat lamp mounted above the cell or a moisture trap installed upstream of the cell may be used.

6.2.6 Aeration Cell. Alternatively, aeration cells available with commercial cold vapor instrumentation may be used.

6.2.7 Aeration Gas Cylinder. Nitrogen, argon, or dry, Hg-free air, equipped with a single-stage regulator. Alternatively, aeration may be provided by a peristaltic metering pump. If a commercial cold vapor instrument is used, follow the manufacturer's recommendations.

7.0 Reagents and Standards

Unless otherwise indicated, it is intended that all reagents conform to the specifications established by the Committee on Analytical Reagents of the American Chemical Society, where such specifications are available; otherwise, use the best available grade.

7.1 Sample Collection and Recovery. The following reagents are required for sample collection

and recovery:

7.1.1 Water. Deionized distilled, to conform to ASTM D 1193–77 or 91 Type 1. If high concentrations of organic matter are not expected to be present, the analyst may eliminate the $KMnO_4$test for oxidizable organic matter. Use this water in all dilutions and solution preparations.

7.1.2 Nitric Acid, 50 Percent (V/V). Mix equal volumes of concentrated $HNO_3$and water, being careful to add the acid to the water slowly.

7.1.3 Silica Gel. Indicating type, 6 to 16 mesh. If previously used, dry at 175 °C (350 °F) for 2 hours. New silica gel may be used as received.

7.1.4 Filter (Optional). Glass fiber filter, without organic binder, exhibiting at least 99.95 percent efficiency on 0.3-µm dioctyl phthalate smoke particles. The filter in cases where the gas stream contains large quantities of particulate matter, but blank filters should be analyzed for Hg content.

7.1.5 Sulfuric Acid, 10 Percent (V/V). Carefully add and mix 100 ml of concentrated $H_2SO_4$to 900 ml of water.

7.1.6 Absorbing Solution, 4 Percent $KMnO_4$(W/V). Prepare fresh daily. Dissolve 40 g of $KMnO_4$in sufficient 10 percent $H_2SO_4$to make 1 liter. Prepare and store in glass bottles to prevent degradation.

7.1.7 Hydrochloric Acid, 8 N. Carefully add and mix 67 ml of concentrated HCl to 33 ml of water.

7.2 Sample Analysis. The following reagents and standards are required for sample analysis:

7.2.1 Water. Same as in Section 7.1.1.

7.2.2 Tin (II) Solution. Prepare fresh daily, and keep sealed when not being used. Completely dissolve 20 g of tin (II) chloride (or 25 g of tin (II) sulfate) crystals (Baker Analyzed reagent grade or any other brand that will give a clear solution) in 25 ml of concentrated HCl. Dilute to 250 ml with water. Do not substitute HNO_3H2SO_4, or other strong acids for the HCl.

7.2.3 Sodium Chloride-Hydroxylamine Solution. Dissolve 12 g of sodium chloride and 12 g of hydroxylamine sulfate (or 12 g of hydroxylamine hydrochloride) in water and dilute to 100 ml.

7.2.4 Hydrochloric Acid, 8 N. Same as Section 7.1.7.

7.2.5 Nitric Acid, 15 Percent (V/V). Carefully add 15 ml $HNO_3$to 85 ml of water.

7.2.6 Antifoam B Silicon Emulsion. J.T. Baker Company (or equivalent).

7.2.7 Mercury Stock Solution, 1 mg Hg/ml. Prepare and store all Hg standard solutions in borosilicate glass containers. Completely dissolve 0.1354 g of Hg (II) chloride in 75 ml of water. Add 10 ml of concentrated HNO_3, and adjust the volume to exactly 100 ml with water. Mix thoroughly. This solution is stable for at least one month.

7.2.8 Intermediate Hg Standard Solution, 10 µg/ml. Prepare fresh weekly. Pipet 5.0 ml of the Hg stock solution (Section 7.2.7) into a 500 ml volumetric flask, and add 20 ml of 15 percent HNO_3solution. Adjust the volume to exactly 500 ml with water. Thoroughly mix the solution.

7.2.9 Working Hg Standard Solution, 200 ng Hg/ml. Prepare fresh daily. Pipet 5.0 ml from the “Intermediate Hg Standard Solution” (Section 7.2.8) into a 250-ml volumetric flask. Add 5 ml of 4 percent $KMnO_4$absorbing solution and 5 ml of 15 percent HNO_3. Adjust the volume to exactly 250 ml with water. Mix thoroughly.

7.2.10 Potassium Permanganate, 5 Percent (W/V). Dissolve 5 g of $KMnO_4$in water and dilute to

100 ml.

7.2.11 Filter. Whatman No. 40, or equivalent.

8.0 Sample Collection, Preservation, Transport, and Storage

Same as Method 101, Section 8.0, with the exception of the following:

8.1 Preliminary Determinations. Same as Method 101, Section 8.2, except that the liberation of free iodine in the first impinger due to high Hg or sulfur dioxide concentrations is not applicable. In this method, high oxidizable organic content may make it impossible to sample for the desired minimum time. This problem is indicated by the complete bleaching of the purple color of the $KMnO_4$solution. In cases where an excess of water condensation is encountered, collect two runs to make one sample, or add an extra impinger in front of the first impinger (also containing acidified $KMnO_4$solution).

8.2 Preparation of Sampling Train. Same as Method 101, Section 8.3, with the exception of the following:

8.2.1 In this method, clean all the glass components by rinsing with 50 percent HNO_3, tap water, 8 N HCl, tap water, and finally with deionized distilled water. Then place 50 ml of absorbing solution in the first impinger and 100 ml in each of the second and third impingers.

8.2.2 If a filter is used, use a pair of tweezers to place the filter in the filter holder. Be sure to center the filter, and place the gasket in the proper position to prevent the sample gas stream from bypassing the filter. Check the filter for tears after assembly is completed. Be sure also to set the filter heating system at the desired operating temperature after the sampling train has been assembled.

8.3 Sampling Train Operation. In addition to the procedure outlined in Method 101, Section 8.5, maintain a temperature around the filter (if applicable) of 120 ±14 °C (248 ±25 °F).

8.4 Sample Recovery. Same as Method 101, Section 8.7, with the exception of the following:

8.4.1 Transfer the probe, impinger assembly, and (if applicable) filter assembly to the cleanup area.

8.4.2 Treat the sample as follows:

8.4.2.1 Container No. 1 (Impinger, Probe, and Filter Holder) and, if applicable, Container No. 1A (HCl rinse).

8.4.2.1.1 Using a graduated cylinder, measure the liquid in the first three impingers to within 1 ml. Record the volume of liquid present (*e.g.,* see Figure 5–6 of Method 5). This information is needed to calculate the moisture content of the effluent gas. (Use only graduated cylinder and glass storage bottles that have been precleaned as in Section 8.2.1.) Place the contents of the first three impingers (four if an extra impinger was added as described in Section 8.1) into a 1000-ml glass sample bottle labeled Container No. 1.

Note: If a filter is used, remove the filter from its holder as outlined under Section 8.4.3.

8.4.2.1.2 Taking care that dust on the outside of the probe or other exterior surfaces does not get into the sample, quantitatively recover the Hg (and any condensate) from the probe nozzle, probe fitting, probe liner, front half of the filter holder (if applicable), and impingers as follows: Rinse these components with a total of 400 ml (350 ml if an extra impinger was added as described in Section 8.1) of fresh absorbing solution, carefully assuring removal of all loose particulate matter from the impingers; add all washings to the 1000 ml glass sample bottle. To remove any residual brown deposits on the glassware following the permanganate rinse, rinse with approximately 100

ml of water, carefully assuring removal of all loose particulate matter from the impingers. Add this rinse to Container No. 1.

8.4.2.1.3 If no visible deposits remain after this water rinse, do not rinse with 8 N HCl. If deposits do remain on the glassware after the water rinse, wash impinger walls and stems with 25 ml of 8 N HCl, and place the wash in a separate container labeled Container No. 1A as follows: Place 200 ml of water in a sample container labeled Container No. 1A. Wash the impinger walls and stem with the HCl by turning the impinger on its side and rotating it so that the HCl contacts all inside surfaces. Pour the HCl wash carefully with stirring into Container No. 1A.

8.4.2.1.4 After all washings have been collected in the appropriate sample container(s), tighten the lid(s) on the container(s) to prevent leakage during shipment to the laboratory. Mark the height of the fluid level to allow subsequent determination of whether leakage has occurred during transport. Label each container to identify its contents clearly.

8.4.3 Container No. 2 (Silica Gel). Same as Method 5, Section 8.7.6.3.

8.4.4 Container No. 3 (Filter). If a filter was used, carefully remove it from the filter holder, place it in a 100-ml glass sample bottle, and add 20 to 40 ml of absorbing solution. If it is necessary to fold the filter, be sure that the particulate cake is inside the fold. Carefully transfer to the 100-ml sample bottle any particulate matter and filter fibers that adhere to the filter holder gasket by using a dry Nylon bristle brush and a sharp-edged blade. Seal the container. Label the container to identify its contents clearly. Mark the height of the fluid level to allow subsequent determination of whether leakage has occurred during transport.

8.4.5 Container No. 4 (Filter Blank). If a filter was used, treat an unused filter from the same filter lot as that used for sampling according to the procedures outlined in Section 8.4.4.

8.4.6 Container No. 5 (Absorbing Solution Blank). Place 650 ml of 4 percent $KMnO_4$absorbing solution in a 1000-ml sample bottle. Seal the container.

8.4.7 Container No. 6 (HCl Rinse Blank). Place 200 ml of water in a 1000-ml sample bottle, and add 25 ml of 8 N HCl carefully with stirring. Seal the container. Only one blank sample per 3 runs is required.

9.0 Quality Control

9.1 Miscellaneous Quality Control Measures.

Section	Quality control measure	Effect
8.0, 10.0	Sampling equipment leak-checks and calibration	Ensure accuracy and precision of sampling measurements.
10.2	Spectrophotometer calibration	Ensure linearity of spectrophotometer response to standards.
11.3.3	Check for matrix effects	Eliminate matrix effects.

9.2 Volume Metering System Checks. Same as Method 5, Section 9.2.

10.0 Calibration and Standardization

Same as Method 101, Section 10.0, with the following exceptions:

10.1 Optical Cell Heating System Calibration. Same as in Method 101, Section 10.4, except use a-25 ml graduated cylinder to add 25 ml of water to the bottle section of the aeration cell.

10.2 Spectrophotometer and Recorder Calibration.

10.2.1 The Hg response may be measured by either peak height or peak area.

Note: The temperature of the solution affects the rate at which elemental Hg is released from a solution and, consequently, it affects the shape of the absorption curve (area) and the point of maximum absorbance (peak height). To obtain reproducible results, all solutions must be brought to room temperature before use.

10.2.2 Set the spectrophotometer wave length at 253.7 nm, and make certain the optical cell is at the minimum temperature that will prevent water condensation. Then set the recorder scale as follows: Using a 25-ml graduated cylinder, add 25 ml of water to the aeration cell bottle. Add three drops of Antifoam B to the bottle, and then pipet 5.0 ml of the working Hg standard solution into the aeration cell.

Note: Always add the Hg-containing solution to the aeration cell after the 25 ml of water.

10.2.3 Place a Teflon-coated stirring bar in the bottle. Add 5 ml of absorbing solution to the aeration bottle, and mix well. Before attaching the bottle section to the bubbler section of the aeration cell, make certain that (1) the aeration cell exit arm stopcock (Figure 101–3 of Method 101) is closed (so that Hg will not prematurely enter the optical cell when the reducing agent is being added) and (2) there is no flow through the bubbler. If conditions (1) and (2) are met, attach the bottle section to the bubbler section of the aeration cell. Add sodium chloride-hydroxylamine in 1 ml increments until the solution is colorless. Now add 5 ml of tin (II) solution to the aeration bottle through the side arm, and immediately stopper the side arm. Stir the solution for 15 seconds, turn on the recorder, open the aeration cell exit arm stopcock, and immediately initiate aeration with continued stirring. Determine the maximum absorbance of the standard, and set this value to read 90 percent of the recorder full scale.

11.0 Analytical Procedure

11.1 Sample Loss Check. Check the liquid level in each container to see if liquid was lost during transport. If a noticeable amount of leakage occurred, either void the sample or use methods subject to the approval of the Administrator to account for the losses.

11.2 Sample Preparation. Treat sample containers as follows:

11.2.1 Containers No. 3 and No. 4 (Filter and Filter Blank).

11.2.1.1 If a filter is used, place the contents, including the filter, of Containers No. 3 and No. 4 in separate 250-ml beakers, and heat the beakers on a steam bath until most of the liquid has evaporated. Do not heat to dryness. Add 20 ml of concentrated $HNO_3$to the beakers, cover them with a watch glass, and heat on a hot plate at 70 °C (160 °F) for 2 hours. Remove from the hot plate.

11.2.1.2 Filter the solution from digestion of the Container No. 3 contents through Whatman No. 40 filter paper, and save the filtrate for addition to the Container No. 1 filtrate as described in Section 11.2.2. Discard the filter paper.

11.2.1.3 Filter the solution from digestion of the Container No. 4 contents through Whatman No. 40 filter paper, and save the filtrate for addition to Container No. 5 filtrate as described in Section 11.2.3 below. Discard the filter paper.

11.2.2 Container No. 1 (Impingers, Probe, and Filter Holder) and, if applicable, No. 1A (HCl

rinse).

11.2.2.1 Filter the contents of Container No. 1 through Whatman No. 40 filter paper into a 1 liter volumetric flask to remove the brown manganese dioxide (MnO_2) precipitate. Save the filter for digestion of the brown MnO_2precipitate. Add the sample filtrate from Container No. 3 to the 1-liter volumetric flask, and dilute to volume with water. If the combined filtrates are greater than 1000 ml, determine the volume to the nearest ml and make the appropriate corrections for blank subtractions. Mix thoroughly. Mark the filtrate as analysis Sample No. A.1 and analyze for Hg within 48 hr of the filtration step. Place the saved filter, which was used to remove the brown MnO_2precipitate, into an appropriate sized container. In a laboratory hood, add 25 ml of 8 N HCl to the filter and allow to digest for a minimum of 24 hours at room temperature.

11.2.2.2 Filter the contents of Container 1A through Whatman No. 40 filter paper into a 500-ml volumetric flask. Then filter the digestate of the brown MnO_2precipitate from Container No. 1 through Whatman No. 40 filter paper into the same 500-ml volumetric flask, and dilute to volume with water. Mark this combined 500 ml dilute solution as analysis Sample No. A.2. Discard the filters.

11.2.3 Container No. 5 (Absorbing Solution Blank) and No. 6 (HCl Rinse Blank).

11.2.3.1 Treat Container No. 5 as Container No. 1 (as described in Section 11.2.2), except substitute the filter blank filtrate from Container No. 4 for the sample filtrate from Container No. 3, and mark as Sample A.1 Blank.

11.2.3.2 Treat Container No. 6 as Container No. 1A, (as described in Section 11.2.2, except substitute the filtrate from the digested blank MnO_2precipitate for the filtrate from the digested sample MnO_2precipitate, and mark as Sample No. A.2 Blank.

Note: When analyzing samples A.1 Blank and HCl A.2 Blank, always begin with 10 ml aliquots. This applies specifically to blank samples.

11.3 Analysis. Calibrate the analytical equipment and develop a calibration curve as outlined in Section 10.0.

11.3.1 Mercury Samples. Then repeat the procedure used to establish the calibration curve with appropriately sized aliquots (1 to 10 ml) of the samples (from Sections 11.2.2 and 11.2.3) until two consecutive peak heights agree within 3 percent of their average value. If the 10 ml sample is below the detectable limit, use a larger aliquot (up to 20 ml), but decrease the volume of water added to the aeration cell accordingly to prevent the solution volume from exceeding the capacity of the aeration bottle. If the peak maximum of a 1.0 ml aliquot is off scale, further dilute the original sample to bring the Hg concentration into the calibration range of the spectrophotometer. If the Hg content of the absorbing solution and filter blank is below the working range of the analytical method, use zero for the blank.

11.3.2 Run a blank and standard at least after every five samples to check the spectrophotometer calibration; recalibrate as necessary.

11.3.3 Check for Matrix Effects (optional). Same as Method 101, Section 11.3.3.

12.0 Data Analysis and Calculations

Note: Carry out calculations, retaining at least one extra decimal significant figure beyond that of the acquired data. Round off figures only after the final calculation. Other forms of the equations may be used as long as they give equivalent results.

12.1 Nomenclature.

C(fltr)Hg= Total ng of Hg in aliquot of $KMnO_4$filtrate and HNO_3digestion of filter analyzed (aliquot of analysis Sample No. A.1).

C(fltr blk)Hg= Total ng of Hg in aliquot of $KMnO_4$blank and HNO_3digestion of blank filter analyzed (aliquot of analysis Sample No. A.1 blank).

C(HC1 blk)Hg= Total ng of Hg analyzed in aliquot of the 500-ml analysis Sample No. HCl A.2 blank.

C(HCl)Hg= Total ng of Hg analyzed in the aliquot from the 500-ml analysis Sample No. HCl A.2.

DF = Dilution factor for the HCl-digested Hg-containing solution, Analysis Sample No. "HCl A.2."

DF_{blk}= Dilution factor for the HCl-digested Hg containing solution, Analysis Sample No. "HCl A.2 blank." (Refer to sample No. "HCl A.2" dilution factor above.)

m(fltr)Hg= Total blank corrected µg of Hg in $KMnO_4$filtrate and HNO_3digestion of filter sample.

m(HCl)Hg= Total blank corrected µg of Hg in HCl rinse and HCl digestate of filter sample.

m_{Hg}= Total blank corrected Hg content in each sample, µg.

S = Aliquot volume of sample added to aeration cell, ml.

S_{blk}= Aliquot volume of blank added to aeration cell, ml.

Vf(blk)= Solution volume of blank sample, 1000 ml for samples diluted as described in Section 11.2.2.

Vf(fltr)= Solution volume of original sample, normally 1000 ml for samples diluted as described in Section 11.2.2.

Vf(HCl)= Solution volume of original sample, 500 ml for samples diluted as described in Section 11.2.1.

10^{-3}= Conversion factor, µg/ng.

12.2 Average Dry Gas Meter Temperature and Average Orifice Pressure Drop, Dry Gas Volume, Volume of Water Vapor Condensed, Moisture Content, Isokinetic Variation, and Stack Gas Velocity and Volumetric Flow Rate. Same as Method 5, Sections 12.2 through 12.5, 12.11, and 12.12, respectively.

12.3 Total Mercury.

12.3.1 For each source sample, correct the average maximum absorbance of the two consecutive samples whose peak heights agree within 3 percent of their average for the contribution of the blank. Use the calibration curve and these corrected averages to determine the final total weight of Hg in ng in the aeration cell for each source sample.

12.3.2 Correct for any dilutions made to bring the sample into the working range of the spectrophotometer.

$$m_{(HCl)Hg} = \frac{\left[C_{(HCl)Hg} DF\right]}{S} - \frac{\left[C_{(HCl\,blk)Hg} DF_{blk}\right]}{S_{blk}} Vf_{(HCl)} \left(10^{-3}\right) \qquad \text{Eq. 101A-1}$$

Note: This dilution factor applies only to the intermediate dilution steps, since the original sample volume $[(V_f)_{HCL}]$ of "HCl A.2" has been factored out in the equation along with the sample aliquot

(S). In Eq. 101A–1, the sample aliquot, S, is introduced directly into the aeration cell for analysis according to the procedure outlined in Section 11.3.1. A dilution factor is required only if it is necessary to bring the sample into the analytical instrument's calibration range.

Note: The maximum allowable blank subtraction for the HCl is the lesser of the two following values: (1) the actual blank measured value (analysis Sample No. HCl A.2 blank), or (2) 5% of the Hg content in the combined HCl rinse and digested sample (analysis Sample No. HCl A.2).

$$m_{(flr)Hg} = \frac{\left[C_{(flr)Hg} DF\, V_{f(flr)}\right]}{S} - \frac{\left[C_{(flr\,blk)Hg} DF_{blk}\, V_{f(blk)}\right]}{S_{blk}} \qquad \text{Eq. 101A-2}$$

Note: The maximum allowable blank subtraction for the HCl is the lesser of the two following values: (1) the actual blank measured value (analysis Sample No. “A.1 blank”), or (2) 5% of the Hg content in the filtrate (analysis Sample No. “A.1”).

$$m_{Hg} = m_{(HCl)Hg} + m_{(flr)Hg} \qquad \text{Eq. 101A-3}$$

12.3 Mercury Emission Rate. Same as Method 101, Section 12.3.

12.4 Determination of Compliance. Same as Method 101, Section 12.4.

13.0 Method Performance

13.1 Precision. Based on eight paired-train tests, the intra-laboratory standard deviation was estimated to be 4.8 µg/ml in the concentration range of 50 to 130 µg/m3.

13.2 Bias. [Reserved]

13.3 Range. After initial dilution, the range of this method is 20 to 800 ng Hg/ml. The upper limit can be extended by further dilution of the sample.

14.0 Pollution Prevention[Reserved]

15.0 Waste Management[Reserved]

16.0 References

Same as Section 16.0 of Method 101, with the addition of the following:

1. Mitchell, W.J., *et al.* Test Methods to Determine the Mercury Emissions from Sludge Incineration Plants. U.S. Environmental Protection Agency. Research Triangle Park, NC. Publication No. EPA–600/4–79–058. September 1979.

2. Wilshire, Frank W., *et al.* Reliability Study of the U.S. EPA's Method 101A—Determination of Particulate and Gaseous Mercury Emissions. U.S. Environmental Protection Agency. Research Triangle Park, NC. Report No. 600/D–31/219 AREAL 367, NTIS Acc No. PB91–233361.

3. Memorandum from William J. Mitchell to Roger T. Shigehara discussing the potential safety hazard in Section 7.2 of Method 101A. February 28, 1990.

17.0 Tables, Diagrams, Flowcharts, And Validation Data[Reserved]

Method 102—Determination of Particulate and Gaseous Mercury Emissions From Chlor-Alkali Plants (Hydrogen Streams)

Note: This method does not include all of the specifications (*e.g.,* equipment and supplies) and

procedures (*e.g.,* sampling and analytical) essential to its performance. Some material is incorporated by reference from other methods in this part and in appendix A to 40 CFR part 60. Therefore, to obtain reliable results, persons using this method should have a thorough knowledge of at least the following additional test methods: Method 1, Method 2, Method 3, Method 5, and Method 101.

1.0 Scope and Application

1.1 Analytes.

Analyte	CAS No.	Sensitivity
Mercury (Hg)	7439–97–6	Dependent upon recorder and spectrophotometer.

1.2 Applicability. This method is applicable for the determination of Hg emissions, including both particulate and gaseous Hg, from chlor-alkali plants and other sources (as specified in the regulations) where the carrier-gas stream in the duct or stack is principally hydrogen.

1.3 Data Quality Objectives. Adherence to the requirements of this method will enhance the quality of the data obtained from air pollutant sampling methods.

2.0 Summary of Method

2.1 Particulate and gaseous Hg emissions are withdrawn isokinetically from the source and collected in acidic iodine monochloride (ICl) solution. The Hg collected (in the mercuric form) is reduced to elemental Hg, which is then aerated from the solution into an optical cell and measured by atomic absorption spectrophotometry.

3.0 Definitions[Reserved]

4.0 Interferences

Same as Method 101, Section 4.2.

5.0 Safety

5.1 Disclaimer. This method may involve hazardous materials, operations, and equipment. This test method may not address all of the safety problems associated with its use. It is the responsibility of the user of this test method to establish appropriate safety and health practices and determine the applicability of regulatory limitations prior to performing this test method.

5.2 Corrosive Reagents. Same as Method 101, Section 5.2.

5.3 Explosive Mixtures. The sampler must conduct the source test under conditions of utmost safety because hydrogen and air mixtures are explosive. Since the sampling train essentially is leakless, attention to safe operation can be concentrated at the inlet and outlet. If a leak does occur, however, remove the meter box cover to avoid a possible explosive mixture. The following specific precautions are recommended:

5.3.1 Operate only the vacuum pump during the test. The other electrical equipment, *e.g.,* heaters, fans, and timers, normally are not essential to the success of a hydrogen stream test.

5.3.2 Seal the sample port to minimize leakage of hydrogen from the stack.

5.3.3 Vent sampled hydrogen at least 3 m (10 ft) away from the train. This can be accomplished by attaching a 13-mm (0.50-in.) ID Tygon tube to the exhaust from the orifice meter.

Note: A smaller ID tubing may cause the orifice meter calibration to be erroneous. Take care to ensure that the exhaust line is not bent or pinched.

6.0 Equipment and Supplies

Same as Method 101, Section 6.0, with the exception of the following:

6.1 Probe Heating System. Do not use, unless otherwise specified.

6.2 Glass Fiber Filter. Do not use, unless otherwise specified.

7.0 Reagents and Standards

Same as Method 101, Section 7.0.

8.0 Sample Collection, Preservation, Transport, and Storage

Same as Method 101, Section 8.0, with the exception of the following:

8.1 Setting of Isokinetic Rates.

8.1.1 If a nomograph is used, take special care in the calculation of the molecular weight of the stack gas and in the setting of the nomograph to maintain isokinetic conditions during sampling (Sections 8.1.1.1 through 8.1.1.3 below).

8.1.1.1 Calibrate the meter box orifice. Use the techniques described in APTD–0576 (see Reference 9 in Section 17.0 of Method 5). Calibration of the orifice meter at flow conditions that simulate the conditions at the source is suggested. Calibration should either be done with hydrogen or with some other gas having similar Reynolds Number so that there is similarity between the Reynolds Numbers during calibration and during sampling.

8.1.1.2 The nomograph described in APTD–0576 cannot be used to calculate the C factor because the nomograph is designed for use when the stack gas dry molecular weight is 29 ±4. Instead, the following calculation should be made to determine the proper C factor:

$$C = 0.00154 \Delta H @ C_p^{\,2} T_m \left(P_s / P_m \right) \frac{\left(1 - B_{ws}\right)^2}{\left(1 - B_{ws}\right) + 18 B_{ws}} \qquad \text{Eq. 102-1}$$

Where:

B_{ws}= Fraction by volume of water vapor in the stack gas.

C_p= Pitot tube calibration coefficient, dimensionless.

M_d= Dry molecular weight of stack gas, lb/lb-mole.

P_s= Absolute pressure of stack gas, in. Hg.

P_m= Absolute pressure of gas at the meter, in. Hg.

T_m= Absolute temperature of gas at the orifice, °R.

ΔH@= Meter box calibration factor obtained in Section 8.1.1.1, in. H_2O.

0.00154 = (in. H_2O/°R).

Note: This calculation is left in English units, and is not converted to metric units because

nomographs are based on English units.

8.1.1.3 Set the calculated C factor on the operating nomograph, and select the proper nozzle diameter and K factor as specified in APTD–0576. If the C factor obtained in Section 8.1.1.2 exceeds the values specified on the existing operating nomograph, expand the C scale logarithmically so that the values can be properly located.

8.1.2 If a calculator is used to set isokinetic rates, it is suggested that the isokinetic equation presented in Reference 13 in Section 17.0 of Method 101 be consulted.

8.2 Sampling in Small (<12-in. Diameter) Stacks. When the stack diameter (or equivalent diameter) is less than 12 inches, conventional pitot tube-probe assemblies should not be used. For sampling guidelines, see Reference 14 in Section 17.0 of Method 101.

9.0 Quality Control

Same as Method 101, Section 9.0.

10.0 Calibration and Standardizations

Same as Method 101, Section 10.0.

11.0 Analytical Procedure

Same as Method 101, Section 11.0.

12.0 Data Analysis and Calculations

Same as Method 101, Section 12.0.

13.0 Method Performance

Same as Method 101, Section 13.0.

13.1 Analytical Range. After initial dilution, the range of this method is 0.5 to 120 µg Hg/ml. The upper limit can be extended by further dilution of the sample.

14.0 Pollution Prevention.[Reserved]

15.0 Waste Management.[Reserved]

16.0 References

Same as Method 101, Section 16.0.

17.0 Tables, Diagrams, Flowcharts, and Validation Data.[Reserved]

Method 103—Beryllium Screening Method

1.0 Scope and Application

1.1 Analytes.

Analyte	CAS No.	Sensitivity
Beryllium (Be)	7440–41–7	Dependent upon analytical procedure used.

1.2 Applicability. This procedure details guidelines and requirements for methods acceptable for use in determining Be emissions in ducts or stacks at stationary sources.

1.3 Data Quality Objectives. Adherence to the requirements of this method will enhance the quality of the data obtained from air pollutant sampling methods.

2.0 Summary of Method

2.1 Particulate Be emissions are withdrawn isokinetically from three points in a duct or stack and are collected on a filter. The collected sample is analyzed for Be using an appropriate technique.

3.0 Definitions.[Reserved]

4.0 Interferences.[Reserved]

5.0 Safety

5.1 Disclaimer. This method may involve hazardous materials, operations, and equipment. This test method may not address all of the safety problems associated with its use. It is the responsibility of the user of this test method to establish appropriate safety and health practices and determine the applicability of regulatory limitations prior to performing this test method.

5.2 Hydrochloric Acid (HCl). Highly corrosive and toxic. Vapors are highly irritating to eyes, skin, nose, and lungs, causing severe damage. May cause bronchitis, pneumonia, or edema of lungs. Exposure to concentrations of 0.13 to 0.2 percent can be lethal to humans in a few minutes. Provide ventilation to limit exposure. Reacts with metals, producing hydrogen gas. Personal protective equipment and safe procedures are useful in preventing chemical splashes. If contact occurs, immediately flush with copious amounts of water at least 15 minutes. Remove clothing under shower and decontaminate. Treat residual chemical burn as thermal burn.

6.0 Equipment and Supplies

6.1 Sample Collection. A schematic of the required sampling train configuration is shown in Figure 103–1 in Section 17.0. The essential components of the train are as follows:

6.1.1 Nozzle. Stainless steel, or equivalent, with sharp, tapered leading edge.

6.1.2 Probe. Sheathed borosilicate or quartz glass tubing.

6.1.3 Filter. Millipore AA, or equivalent, with appropriate filter holder that provides a positive seal against leakage from outside or around the filter. It is suggested that a Whatman 41, or equivalent, be placed immediately against the back side of the Millipore filter as a guard against breakage of the Millipore. Include the backup filter in the analysis. To be equivalent, other filters shall exhibit at least 99.95 percent efficiency (0.05 percent penetration) on 0.3 micron dioctyl phthalate smoke particles, and be amenable to the Be analysis procedure. The filter efficiency tests shall be conducted in accordance with ASTM D 2986–71, 78, 95a (incorporated by reference—see §61.18). Test data from the supplier's quality control program are sufficient for this purpose.

6.1.4 Meter-Pump System. Any system that will maintain isokinetic sampling rate, determine sample volume, and is capable of a sampling rate of greater than 14 lpm (0.5 cfm).

6.2 Measurement of Stack Conditions. The following equipment is used to measure stack conditions:

6.2.1 Pitot Tube. Type S, or equivalent, with a constant coefficient (±5 percent) over the working range.

6.2.2 Inclined Manometer, or Equivalent. To measure velocity head to ±10 percent of the minimum value.

6.2.3 Temperature Measuring Device. To measure stack temperature to ±1.5 percent of the minimum absolute stack temperature.

6.2.4 Pressure Measuring Device. To measure stack pressure to ±2.5 mm Hg (0.1 in. Hg).

6.2.5 Barometer. To measure atmospheric pressure to ±2.5 mm Hg (0.1 in. Hg).

6.2.6 Wet and Dry Bulb Thermometers, Drying Tubes, Condensers, or Equivalent. To determine stack gas moisture content to ±1 percent.

6.3 Sample Recovery.

6.3.1 Probe Cleaning Equipment. Probe brush or cleaning rod at least as long as probe, or equivalent. Clean cotton balls, or equivalent, should be used with the rod.

6.3.2 Leakless Glass Sample Bottles. To contain sample.

6.4 Analysis. All equipment necessary to perform an atomic absorption, spectrographic, fluorometric, chromatographic, or equivalent analysis.

7.0 Reagents and Standards

7.1 Sample Recovery.

7.1.1 Water. Deionized distilled, to conform to ASTM D 1193–77, 91 (incorporated by reference—see §61.18), Type 3.

7.1.2 Acetone. Reagent grade.

7.1.3 Wash Acid, 50 Percent (V/V) Hydrochloric Acid (HCl). Mix equal volumes of concentrated HCl and water, being careful to add the acid slowly to the water.

7.2 Analysis. Reagents and standards as necessary for the selected analytical procedure.

8.0 Sample Collection, Preservation, Transport, and Storage

Guidelines for source testing are detailed in the following sections. These guidelines are generally applicable; however, most sample sites differ to some degree and temporary alterations such as stack extensions or expansions often are required to insure the best possible sample site. Further, since Be is hazardous, care should be taken to minimize exposure. Finally, since the total quantity of Be to be collected is quite small, the test must be carefully conducted to prevent contamination or loss of sample.

8.1 Selection of a Sampling Site and Number of Sample Runs. Select a suitable sample site that is as close as practicable to the point of atmospheric emission. If possible, stacks smaller than one foot in diameter should not be sampled.

8.1.1 Ideal Sampling Site. The ideal sampling site is at least eight stack or duct diameters downstream and two diameters upstream from any flow disturbance such as a bend, expansion or contraction. For rectangular cross sections, use Equation 103–1 in Section 12.2 to determine an equivalent diameter, D_e.

8.1.2 Alternate Sampling Site. Some sampling situations may render the above sampling site criteria impractical. In such cases, select an alternate site no less than two diameters downstream and one-half diameter upstream from any point of flow disturbance. Additional sample runs are

recommended at any sample site not meeting the criteria of Section 8.1.1.

8.1.3 Number of Sample Runs Per Test. Three sample runs constitute a test. Conduct each run at one of three different points. Select three points that proportionately divide the diameter, or are located at 25, 50, and 75 percent of the diameter from the inside wall. For horizontal ducts, sample on a vertical line through the centroid. For rectangular ducts, sample on a line through the centroid and parallel to a side. If additional sample runs are performed per Section 8.1.2, proportionately divide the duct to accommodate the total number of runs.

8.2 Measurement of Stack Conditions. Using the equipment described in Section 6.2, measure the stack gas pressure, moisture, and temperature to determine the molecular weight of the stack gas. Sound engineering estimates may be made in lieu of direct measurements. Describe the basis for such estimates in the test report.

8.3 Preparation of Sampling Train.

8.3.1 Assemble the sampling train as shown in Figure 103–1. It is recommended that all glassware be precleaned by soaking in wash acid for two hours.

8.3.2 Leak check the sampling train at the sampling site. The leakage rate should not be in excess of 1 percent of the desired sample rate.

8.4 Sampling Train Operation.

8.4.1 For each run, measure the velocity at the selected sampling point. Determine the isokinetic sampling rate. Record the velocity head and the required sampling rate. Place the nozzle at the sampling point with the tip pointing directly into the gas stream. Immediately start the pump and adjust the flow to isokinetic conditions. At the conclusion of the test, record the sampling rate. Again measure the velocity head at the sampling point. The required isokinetic rate at the end of the period should not have deviated more than 20 percent from that originally calculated. Describe the reason for any deviation beyond 20 percent in the test report.

8.4.2 Sample at a minimum rate of 14 liters/min (0.5 cfm). Obtain samples over such a period or periods of time as are necessary to determine the maximum emissions which would occur in a 24-hour period. In the case of cyclic operations, perform sufficient sample runs so as to allow determination or calculation of the emissions that occur over the duration of the cycle. A minimum sampling time of two hours per run is recommended.

8.5 Sample Recovery.

8.5.1 It is recommended that all glassware be precleaned as in Section 8.3. Sample recovery should also be performed in an area free of possible Be contamination. When the sampling train is moved, exercise care to prevent breakage and contamination. Set aside a portion of the acetone used in the sample recovery as a blank for analysis. The total amount of acetone used should be measured for accurate blank correction. Blanks can be eliminated if prior analysis shows negligible amounts.

8.5.2 Remove the filter (and backup filter, if used) and any loose particulate matter from filter holder, and place in a container.

8.5.3 Clean the probe with acetone and a brush or long rod and cotton balls. Wash into the container with the filter. Wash out the filter holder with acetone, and add to the same container.

9.0 Quality Control.[Reserved]

10.0 Calibration and Standardization

10.1 Sampling Train. As a procedural check, compare the sampling rate regulation with a dry gas

meter, spirometer, rotameter (calibrated for prevailing atmospheric conditions), or equivalent, attached to the nozzle inlet of the complete sampling train.

10.2 Analysis. Perform the analysis standardization as suggested by the manufacturer of the instrument, or the procedures for the analytical method in use.

11.0 Analytical Procedure

Make the necessary preparation of samples and analyze for Be. Any currently acceptable method (e.g., atomic absorption, spectrographic, fluorometric, chromatographic) may be used.

12.0 Data Analysis and Calculations

12.1 Nomenclature.

A_s(avg) = Stack area, m^2 (ft^2).

L = Length.

R = Be emission rate, g/day.

V_s(avg) = Average stack gas velocity, m/sec (ft/sec).

V_{total}= Total volume of gas sampled, m^3 (ft^3).

W = Width.

W_t= Total weight of Be collected, mg.

10^{-6}= Conversion factor, g/µg.

86,400 = Conversion factor, sec/day.

12.2 Calculate the equivalent diameter, De, for a rectangular cross section as follows:

$$D_e = \frac{2 \cdot L \cdot W}{L + W} \qquad \text{Eq. 103-1}$$

12.3 Calculate the Be emission rate, R, in g/day for each stack using Equation 103–2. For cyclic operations, use only the time per day each stack is in operation. The total Be emission rate from a source is the summation of results from all stacks.

$$R = \frac{W_t V_{s(avg)} A_s \left(86,400\right)\left(10^{-6}\right)}{V_{total}} \qquad \text{Eq. 103-2}$$

12.4 Test Report. Prepare a test report that includes as a minimum: A detailed description of the sampling train used, results of the procedural check described in Section 10.1 with all data and calculations made, all pertinent data taken during the test, the basis for any estimates made, isokinetic sampling calculations, and emission results. Include a description of the test site, with a block diagram and brief description of the process, location of the sample points in the stack cross section, and stack dimensions and distances from any point of disturbance.

13.0 Method Performance.[Reserved]

14.0 Pollution Prevention.[Reserved]

15.0 Waste Management.[Reserved]

16.0 References.[Reserved]

17.0 Tables, Diagrams, Flow Charts, and Validation Data

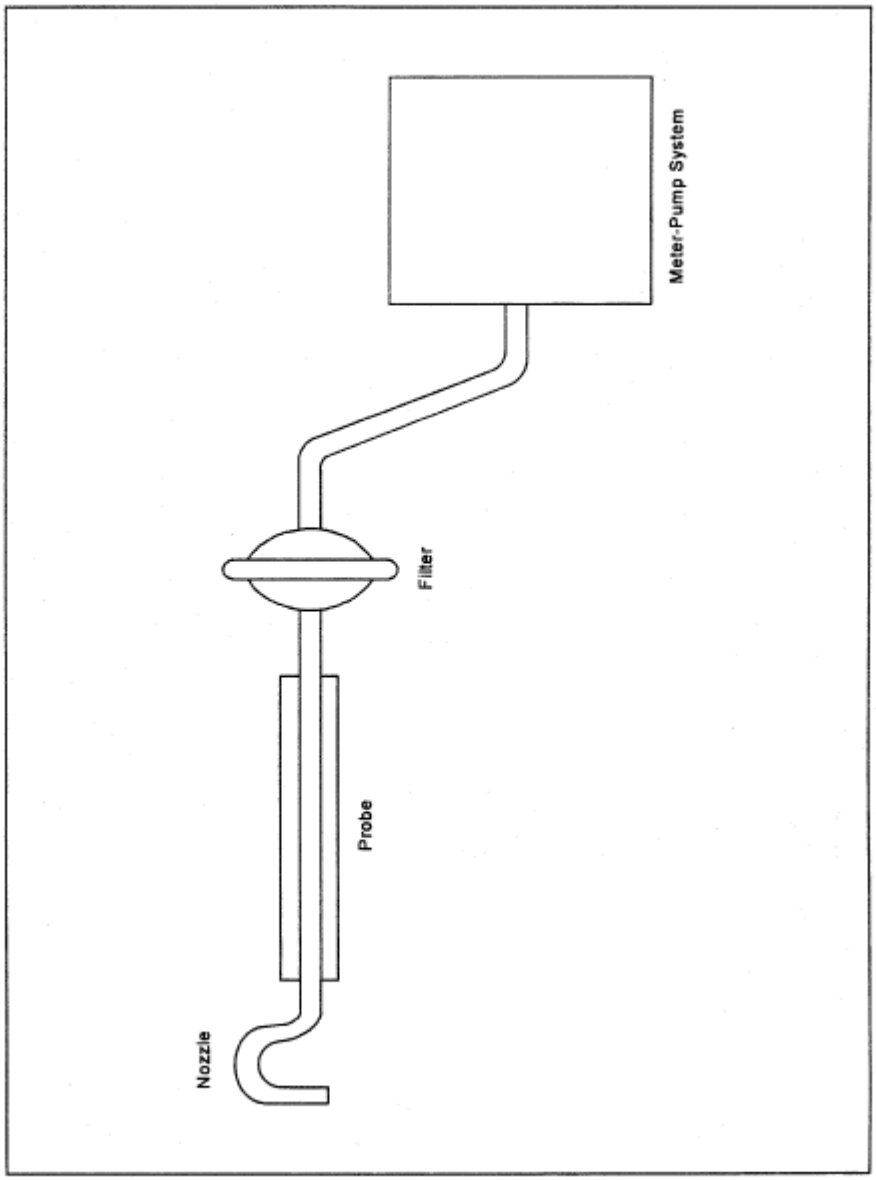

Figure 103-1. Beryllium Screening Method Sampling Train Schematic.

Method 104—Determination of Beryllium Emissions From Stationary Sources

Note: This method does not include all of the specifications (*e.g.,* equipment and supplies) and procedures (*e.g.,* sampling and analytical) essential to its performance. Some material is incorporated by reference from methods in appendix A to 40 CFR part 60. Therefore, to obtain reliable results, persons using this method should have a thorough knowledge of at least the following additional test methods: Method 1, Method 2, Method 3, and Method 5 in appendix A,

part 60.

1.0 Scope and Application

1.1 Analytes.

Analyte	CAS No.	Sensitivity
Beryllium (Be)	7440–41–7	Dependent upon recorder and spectrophotometer.

1.2 Applicability. This method is applicable for the determination of Be emissions in ducts or stacks at stationary sources. Unless otherwise specified, this method is not intended to apply to gas streams other than those emitted directly to the atmosphere without further processing.

1.3 Data Quality Objectives. Adherences to the requirements of this method will enhance the quality of the data obtained from air pollutant sampling methods.

2.0 Summary of Method

2.1 Particulate and gaseous Be emissions are withdrawn isokinetically from the source and are collected on a glass fiber filter and in water. The collected sample is digested in an acid solution and is analyzed by atomic absorption spectrophotometry.

3.0 Definitions[Reserved]

4.0 Interferences

4.1 Matrix Effects. Analysis for Be by flame atomic absorption spectrophotometry is sensitive to the chemical composition and to the physical properties (*e.g.,* viscosity, pH) of the sample. Aluminum and silicon in particular are known to interfere when present in appreciable quantities. The analytical procedure includes (optionally) the use of the Method of Standard Additions to check for these matrix effects, and sample analysis using the Method of Standard Additions if significant matrix effects are found to be present (see Reference 2 in Section 16.0).

5.0 Safety

5.1 Disclaimer. This method may involve hazardous materials, operations, and equipment. This test method may not address all of the safety problems associated with its use. It is the responsibility of the user of this test method to establish appropriate safety and health practices and determine the applicability of regulatory limitations prior to performing this test method.

5.2 Corrosive reagents. The following reagents are hazardous. Personal protective equipment and safe procedures are useful in preventing chemical splashes. If contact occurs, immediately flush with copious amounts of water at least 15 minutes. Remove clothing under shower and decontaminate. Treat residual chemical burn as thermal burn.

5.2.1 Hydrochloric Acid (HC_l). Highly toxic. Vapors are highly irritating to eyes, skin, nose, and lungs, causing severe damage. May cause bronchitis, pneumonia, or edema of lungs. Exposure to concentrations of 0.13 to 0.2 percent can be lethal to humans in a few minutes. Provide ventilation to limit exposure. Reacts with metals, producing hydrogen gas.

5.2.2 Hydrogen Peroxide (H_2O_2). Irritating to eyes, skin, nose, and lungs.

5.2.3 Nitric Acid (HNO_3). Highly corrosive to eyes, skin, nose, and lungs. Vapors cause bronchitis, pneumonia, or edema of lungs. Reaction to inhalation may be delayed as long as 30 hours and still be fatal. Provide ventilation to limit exposure. Strong oxidizer. Hazardous reaction

may occur with organic materials such as solvents.

5.2.4 Sodium Hydroxide (NaOH). Causes severe damage to eyes and skin. Inhalation causes irritation to nose, throat, and lungs. Reacts exothermically with limited amounts of water.

5.3 Beryllium is hazardous, and precautions should be taken to minimize exposure.

6.0 Equipment and Supplies

6.1 Sample Collection. Same as Method 5, Section 6.1, with the exception of the following:

6.1.1 Sampling Train. Same as Method 5, Section 6.1.1, with the exception of the following:

6.1.2 Probe Liner. Borosilicate or quartz glass tubing. A heating system capable of maintaining a gas temperature of 120 ±14 °C (248 ±25 °F) at the probe exit during sampling to prevent water condensation may be used.

Note: Do not use metal probe liners.

6.1.3 Filter Holder. Borosilicate glass, with a glass frit filter support and a silicone rubber gasket. Other materials of construction (*e.g.,* stainless steel, Teflon, Viton) may be used, subject to the approval of the Administrator. The holder design shall provide a positive seal against leakage from the outside or around the filter. The holder shall be attached immediately at the outlet of the probe. A heating system capable of maintaining the filter at a minimum temperature in the range of the stack temperature may be used to prevent condensation from occurring.

6.1.4 Impingers. Four Greenburg-Smith impingers connected in series with leak-free ground glass fittings or any similar leak-free noncontaminating fittings. For the first, third, and fourth impingers, use impingers that are modified by replacing the tip with a 13 mm-ID (0.5 in.) glass tube extending to 13 mm (0.5 in.) from the bottom of the flask may be used.

6.2 Sample Recovery. The following items are needed for sample recovery:

6.2.1 Probe Cleaning Rod. At least as long as probe.

6.2.2 Glass Sample Bottles. Leakless, with Teflon-lined caps, 1000 ml.

6.2.3 Petri Dishes. For filter samples, glass or polyethylene, unless otherwise specified by the Administrator.

6.2.4 Graduated Cylinder. 250 ml.

6.2.5 Funnel and Rubber Policeman. To aid in transfer of silica gel to container; not necessary if silica gel is weighed in the field.

6.2.6 Funnel. Glass, to aid in sample recovery.

6.2.7 Plastic Jar. Approximately 300 ml.

6.3 Analysis. The following items are needed for sample analysis:

6.3.1 Atomic Absorption Spectrophotometer. Perkin-Elmer 303, or equivalent, with nitrous oxide/acetylene burner.

6.3.2 Hot Plate.

6.3.3 Perchloric Acid Fume Hood.

7.0 Reagents and Standards

Note: Unless otherwise indicated, it is intended that all reagents conform to the specifications established by the Committee on Analytical Reagents of the American Chemical Society, where such specifications are available; otherwise, use the best available grade.

7.1 Sample Collection. Same as Method 5, Section 7.1, including deionized distilled water conforming to ASTM D 1193–77 or 91 (incorporated by reference—see §61.18), Type 3. The Millipore AA filter is recommended.

7.2 Sample Recovery. Same as Method 5 in appendix A, part 60, Section 7.2, with the addition of the following:

7.2.1 Wash Acid, 50 Percent (V/V) Hydrochloric Acid (HCl). Mix equal volumes of concentrated HCl and water, being careful to add the acid slowly to the water.

7.3 Sample Preparation and Analysis. The following reagents and standards and standards are needed for sample preparation and analysis:

7.3.1 Water. Same as in Section 7.1.

7.3.2. Perchloric Acid ($HClO_4$). Concentrated (70 percent V/V).

7.3.3 Nitric Acid (HNO_3). Concentrated.

7.3.4 Beryllium Powder. Minimum purity 98 percent.

7.3.5 Sulfuric Acid (H_2SO_4) Solution, 12 N. Dilute 33 ml of concentrated $H_2SO_4$to 1 liter with water.

7.3.6 Hydrochloric Acid Solution, 25 Percent HCl (V/V).

7.3.7 Stock Beryllium Standard Solution, 10 µg Be/ml. Dissolve 10.0 mg of Be in 80 ml of 12 N H_2SO_4in a 1000-ml volumetric flask. Dilute to volume with water. This solution is stable for at least one month. Equivalent strength Be stock solutions may be prepared from Be salts such as $BeCl_2$and $Be(NO_3)_2$(98 percent minimum purity).

7.3.8 Working Beryllium Standard Solution, 1 µg Be/ml. Dilute a 10 ml aliquot of the stock beryllium standard solution to 100 ml with 25 percent HCl solution to give a concentration of 1 mg/ml. Prepare this dilute stock solution fresh daily.

8.0 Sample Collection, Preservation, Transport, and Storage

The amount of Be that is collected is generally small, therefore, it is necessary to exercise particular care to prevent contamination or loss of sample.

8.1 Pretest Preparation. Same as Method 5, Section 8.1, except omit Section 8.1.3.

8.2 Preliminary Determinations. Same as Method 5, Section 8.2, with the exception of the following:

8.2.1 Select a nozzle size based on the range of velocity heads to assure that it is not necessary to change the nozzle size in order to maintain isokinetic sampling rates below 28 liters/min (1.0 cfm).

8.2.2 Obtain samples over a period or periods of time that accurately determine the maximum emissions that occur in a 24-hour period. In the case of cyclic operations, perform sufficient sample runs for the accurate determination of the emissions that occur over the duration of the

cycle. A minimum sample time of 2 hours per run is recommended.

8.3 Preparation of Sampling Train. Same as Method 5, Section 8.3, with the exception of the following:

8.3.1 Prior to assembly, clean all glassware (probe, impingers, and connectors) by first soaking in wash acid for 2 hours, followed by rinsing with water.

8.3.2 Save a portion of the water for a blank analysis.

8.3.3 Procedures relating to the use of metal probe liners are not applicable.

8.3.4 Probe and filter heating systems are needed only if water condensation is a problem. If this is the case, adjust the heaters to provide a temperature at or above the stack temperature. However, membrane filters such as the Millipore AA are limited to about 107 °C (225 °F). If the stack gas is in excess of about 93 °C (200 °F), consideration should be given to an alternate procedure such as moving the filter holder downstream of the first impinger to insure that the filter does not exceed its temperature limit. After the sampling train has been assembled, turn on and set the probe heating system, if applicable, at the desired operating temperature. Allow time for the temperatures to stabilize. Place crushed ice around the impingers.

Note: An empty impinger may be inserted between the third impinger and the silica gel to remove excess moisture from the sample stream.

8.4 Leak Check Procedures, Sampling Train Operation, and Calculation of Percent Isokinetic. Same as Method 5, Sections 8.4, 8.5, and 8.6, respectively.

8.5 Sample Recovery. Same as Method 5, Section 8.7, except treat the sample as follows: Transfer the probe and impinger assembly to a cleanup area that is clean, protected from the wind, and free of Be contamination. Inspect the train before and during this assembly, and note any abnormal conditions. Treat the sample as follows: Disconnect the probe from the impinger train.

8.5.1 Container No. 1. Same as Method 5, Section 8.7.6.1.

8.5.2 Container No. 2. Place the contents (measured to 1 ml) of the first three impingers into a glass sample bottle. Use the procedures outlined in Section 8.7.6.2 of Method 5, where applicable, to rinse the probe nozzle, probe fitting, probe liner, filter holder, and all glassware between the filter holder and the back half of the third impinger with water. Repeat this procedure with acetone. Place both water and acetone rinse solutions in the sample bottle with the contents of the impingers.

8.5.3 Container No. 3. Same as Method 5, Section 8.7.6.3.

8.6 Blanks.

8.6.1 Water Blank. Save a portion of the water as a blank. Take 200 ml directly from the wash bottle being used and place it in a plastic sample container labeled “H_2O blank.”

8.6.2 Filter. Save two filters from each lot of filters used in sampling. Place these filters in a container labeled “filter blank.”

8.7 Post-test Glassware Rinsing. If an additional test is desired, the glassware can be carefully double rinsed with water and reassembled. However, if the glassware is out of use more than 2 days, repeat the initial acid wash procedure.

9.0 Quality Control

9.1 Miscellaneous Quality Control Measures.

Section	Quality control measure	Effect
8.4, 10.1	Sampling equipment leak checks and calibration	Ensure accuracy and precision of sampling measurements.
10.2	Spectrophotometer calibration	Ensure linearity of spectrophotometer response to standards.
11.5	Check for matrix effects	Eliminate matrix effects.
11.6	Audit sample analysis	Evaluate analyst's technique and standards preparation.

9.2 Volume Metering System Checks. Same as Method 5, Section 9.2.

10.0 Calibration and Standardization

Note: Maintain a laboratory log of all calibrations.

10.1 Sampling Equipment. Same as Method 5, Section 10.0.

10.2 Preparation of Standard Solutions. Pipet 1, 3, 5, 8, and 10 ml of the 1.0 µg Be/ml working standard solution into separate 100 ml volumetric flasks, and dilute to the mark with water. The total amounts of Be in these standards are 1, 3, 5, 8, and 10 µg, respectively.

10.3 Spectrophotometer and Recorder. The Be response may be measured by either peak height or peak area. Analyze an aliquot of the 10-µg standard at 234.8 nm using a nitrous oxide/acetylene flame. Determine the maximum absorbance of the standard, and set this value to read 90 percent of the recorder full scale.

10.4 Calibration Curve.

10.4.1 After setting the recorder scale, analyze an appropriately sized aliquot of each standard and the BLANK (see Section 11) until two consecutive peaks agree within 3 percent of their average value.

10.4.3 Subtract the average peak height (or peak area) of the blank—which must be less than 2 percent of recorder full scale—from the averaged peak heights of the standards. If the blank absorbance is greater than 2 percent of full-scale, the probable cause is Be contamination of a reagent or carry-over of Be from a previous sample. Prepare the calibration curve by plotting the corrected peak height of each standard solution versus the corresponding total Be weight in the standard (in µg).

10.5 Spectrophotometer Calibration Quality Control. Calculate the least squares slope of the calibration curve. The line must pass through the origin or through a point no further from the origin than ±2 percent of the recorder full scale. Multiply the corrected peak height by the reciprocal of the least squares slope to determine the distance each calibration point lies from the theoretical calibration line. The difference between the calculated concentration values and the actual concentrations (i.e., 1, 3, 5, 8, and 10 µg Be) must be less than 7 percent for all standards.

11.0 Analytical Procedure

11.1 Sample Loss Check. Prior to analysis, check the liquid level in Container No. 2. Note on the analytical data sheet whether leakage occurred during transport. If a noticeable amount of leakage occurred, either void the sample or take steps, subject to the approval of the Administrator, to adjust the final results.

11.2 Glassware Cleaning. Before use, clean all glassware according to the procedure of Section 8.3.1.

11.3 Sample Preparation. The digestion of Be samples is accomplished in part in concentrated $HClO_4$.

Note: The sample must be heated to light brown fumes after the initial HNO3 addition; otherwise, dangerous perchlorates may result from the subsequent $HClO_4$digestion. $HClO_4$should be used only under a hood.

11.3.1 Container No. 1. Transfer the filter and any loose particulate matter from Container No. 1 to a 150-ml beaker. Add 35 ml concentrated HNO_3. To oxidize all organic matter, heat on a hotplate until light brown fumes are evident. Cool to room temperature, and add 5 ml 12 N $H_2SO_4$and 5 ml concentrated $HClO_4$.

11.3.2 Container No. 2. Place a portion of the water and acetone sample into a 150 ml beaker, and put on a hotplate. Add portions of the remainder as evaporation proceeds and evaporate to dryness. Cool the residue, and add 35 ml concentrated HNO_3. To oxidize all organic matter, heat on a hotplate until light brown fumes are evident. Cool to room temperature, and add 5 ml 12 N $H_2SO_4$and 5 ml concentrated $HClO_4$. Then proceed with step 11.3.4.

11.3.3 Final Sample Preparation. Add the sample from Section 11.3.2 to the 150-ml beaker from Section 11.3.1. Replace on a hotplate, and evaporate to dryness in a $HClO_4$hood. Cool the residue to room temperature, add 10.0 ml of 25 percent V/V HCl, and mix to dissolve the residue.

11.3.4 Filter and Water Blanks. Cut each filter into strips, and treat each filter individually as directed in Section 11.3.1. Treat the 200-ml water blank as directed in Section 11.3.2. Combine and treat these blanks as directed in Section 11.3.3.

11.4 Spectrophotometer Preparation. Turn on the power; set the wavelength, slit width, and lamp current; and adjust the background corrector as instructed by the manufacturer's manual for the particular atomic absorption spectrophotometer. Adjust the burner and flame characteristics as necessary.

11.5 Analysis. Calibrate the analytical equipment and develop a calibration curve as outlined in Sections 10.4 and 10.5.

11.5.1 Beryllium Samples. Repeat the procedure used to establish the calibration curve with an appropriately sized aliquot of each sample (from Section 11.3.3) until two consecutive peak heights agree within 3 percent of their average value. The peak height of each sample must be greater than 10 percent of the recorder full scale. If the peak height of the sample is off scale on the recorder, further dilute the original source sample to bring the Be concentration into the calibration range of the spectrophotometer.

11.5.2 Run a blank and standard at least after every five samples to check the spectrophotometer calibration. The peak height of the blank must pass through a point no further from the origin than ±2 percent of the recorder full scale. The difference between the measured concentration of the standard (the product of the corrected peak height and the reciprocal of the least squares slope) and the actual concentration of the standard must be less than 7 percent, or recalibration of the analyzer is required.

11.5.3 Check for Matrix Effects (optional). Use the Method of Standard Additions (see Reference

2 in Section 16.0) to check at least one sample from each source for matrix effects on the Be results. If the results of the Method of Standard Additions procedure used on the single source sample do not agree to within 5 percent of the value obtained by the routine atomic absorption analysis, then reanalyze all samples from the source using the Method of Standard Additions procedure.

11.6 Container No. 2 (Silica Gel). Weigh the spent silica gel (or silica gel plus impinger) to the nearest 0.5 g using a balance. (This step may be conducted in the field.)

12.0 Data Analysis and Calculations

Carry out calculations, retaining at least one extra decimal significant figure beyond that of the acquired data. Round off figures only after the final calculation. Other forms of the equations may be used as long as they give equivalent results.

12.1 Nomenclature.

K_1= 0.3858 °K/mm Hg for metric units.

= 17.64 °R/in. Hg for English units.

K_3= 10^{-6}g/µg for metric units.

= 2.2046 × 10^{-9}lb/µg for English units.

m_{Be}= Total weight of beryllium in the source sample.

P_s= Absolute stack gas pressure, mm Hg (in. Hg).

t = Daily operating time, sec/day.

T_s= Absolute average stack gas temperature, °K (°R).

Vm(std)= Dry gas sample volume at standard conditions, scm (scf).

Vw(std)= Volume of water vapor at standard conditions, scm (scf).

12.2 Average Dry Gas Meter Temperature and Average Orifice Pressure Drop, Dry Gas Volume, Volume of Water Vapor Condensed, Moisture Content, Isokinetic Variation, and Stack Gas Velocity and Volumetric Flow Rate. Same as Method 5, Sections 12.2 through 12.5, 12.11, and 12.12, respectively.

12.3 Total Beryllium. For each source sample, correct the average maximum absorbance of the two consecutive samples whose peak heights agree within 3 percent of their average for the contribution of the solution blank (see Sections 11.3.4 and 11.5.2). Correcting for any dilutions if necessary, use the calibration curve and these corrected averages to determine the total weight of Be in each source sample.

12.4 Beryllium Emission Rate. Calculate the daily Hg emission rate, R, using Equation 104–1. For continuous operations, the operating time is equal to 86,400 seconds per day. For cyclic operations, use only the time per day each stack is in operation. The total Hg emission rate from a source will be the summation of results from all stacks.

$$R = \frac{K_1 K_3 t m_{Be} P_s v_s A_s}{T_s\left(V_{m(std)} + V_{w(std)}\right)} \qquad \text{Eq. 104-1}$$

12.5 Determination of Compliance. Each performance test consists of three sample runs. For the

purpose of determining compliance with an applicable national emission standard, use the average of the results of all sample runs.

13.0 Method Performance.[Reserved]

14.0 Pollution Prevention.[Reserved]

15.0 Waste Management.[Reserved]

16.0 References

Same as References 1, 2, and 4–11 of Section 16.0 of Method 101 with the addition of the following:

1. Amos, M.D., and J.B. Willis. Use of High-Temperature Pre-Mixed Flames in Atomic Absorption Spectroscopy. Spectrochim. Acta. 22:1325. 1966.

2. Fleet, B., K.V. Liberty, and T. S. West. A Study of Some Matrix Effects in the Determination of Beryllium by Atomic Absorption Spectroscopy in the Nitrous Oxide-Acetylene Flame. Talanta 17:203. 1970.

17.0 Tables, Diagrams, Flowcharts, And Validation Data[Reserved]

Method 105—Determination of Mercury in Wastewater Treatment Plant Sewage Sludges

Note: This method does not include all of the specifications (*e.g.,* equipment and supplies) and procedures (*e.g.,* sampling and analytical) essential to its performance. Some material is incorporated by reference from other methods in this part. Therefore, to obtain reliable results, persons using this method should also have a thorough knowledge of at least the following additional test methods: Method 101 and Method 101A.

1.0 Scope and Application

1.1 Analytes.

Analyte	CAS No.	Sensitivity
Mercury (Hg)	7439–97–6	Dependent upon spectrophotometer and recorder.

1.2 Applicability. This method is applicable for the determination of total organic and inorganic Hg content in sewage sludges.

1.3 Data Quality Objectives. Adherence to the requirements of this method will enhance the quality of the data obtained from air pollutant sampling methods.

2.0 Summary of Method

2.1 Time-composite sludge samples are withdrawn from the conveyor belt subsequent to dewatering and before incineration or drying. A weighed portion of the sludge is digested in aqua regia and is oxidized by potassium permanganate ($KMnO_4$). Mercury in the digested sample is then measured by the conventional spectrophotometric cold-vapor technique.

3.0 Definitions[Reserved]

4.0 Interferences[Reserved]

5.0 Safety

5.1 Disclaimer. This method may involve hazardous materials, operations, and equipment. This test method may not address all of the safety problems associated with its use. It is the responsibility of the user of this test method to establish appropriate safety and health practices and determine the applicability of regulatory limitations prior to performing this test method.

5.2 Corrosive Reagents. The following reagents are hazardous. Personal protective equipment and safe procedures are useful in preventing chemical splashes. If contact occurs, immediately flush with copious amounts of water at least 15 minutes. Remove clothing under shower and decontaminate. Treat residual chemical burn as thermal burn.

5.2.1 Hydrochloric Acid (HCl). Highly toxic. Vapors are highly irritating to eyes, skin, nose, and lungs, causing severe damage. May cause bronchitis, pneumonia, or edema of lungs. Exposure to concentrations of 0.13 to 0.2 percent can be lethal to humans in a few minutes. Provide ventilation to limit exposure. Reacts with metals, producing hydrogen gas.

5.2.2 Nitric Acid (HNO_3). Highly corrosive to eyes, skin, nose, and lungs. Vapors cause bronchitis, pneumonia, or edema of lungs. Reaction to inhalation may be delayed as long as 30 hours and still be fatal. Provide ventilation to limit exposure. Strong oxidizer. Hazardous reaction may occur with organic materials such as solvents.

6.0 Equipment and Supplies

6.1 Sample Collection and Mixing. The following items are required for collection and mixing of the sludge samples:

6.1.1 Container. Plastic, 50-liter.

6.1.2 Scoop. To remove 950-ml (1 quart.) sludge sample.

6.1.3 Mixer. Mortar mixer, wheelbarrow-type, 57-liter (or equivalent) with electricity-driven motor.

6.1.4 Blender. Waring-type, 2-liter.

6.1.5 Scoop. To remove 100-ml and 20-ml samples of blended sludge.

6.1.6 Erlenmeyer Flasks. Four, 125-ml.

6.1.7 Beakers. Glass beakers in the following sizes: 50 ml (1), 200 ml (1), 400 ml (2).

6.2 Sample Preparation and Analysis. Same as Method 101, Section 6.3, with the addition of the following:

6.2.1 Hot Plate.

6.2.2 Desiccator.

6.2.3 Filter Paper. S and S No. 588 (or equivalent).

6.2.4 Beakers. Glass beakers, 200 ml and 400 ml (2 each).

7.0 Reagents and Standards

Note: Unless otherwise indicated, it is intended that all reagents conform to the specifications established by the Committee on Analytical Reagents of the American Chemical Society, where such specifications are available; otherwise, use the best available grade.

7.1 Sample Analysis. Same as Method 101A, Section 7.2, with the following additions and exceptions:

7.1.1 Hydrochloric Acid. The concentrated HCl specified in Method 101A, Section 7.2.4, is not required.

7.1.2 Aqua Regia. Prepare immediately before use. Carefully add one volume of concentrated $HNO_3$to three volumes of concentrated HCl.

8.0 Sample Collection, Preservation, Storage, and Transport

8.1 Sludge Sampling. Withdraw equal volume increments of sludge [for a total of at least 15 liters (16 quarts)] at intervals of 30 min over an 8-hr period, and combine in a rigid plastic container.

8.2 Sludge Mixing. Transfer the entire 15-liter sample to a mortar mixer. Mix the sample for a minimum of 30 min at 30 rpm. Take six 100-ml portions of sludge, and combine in a 2-liter blender. Blend sludge for 5 min; add water as necessary to give a fluid consistency. Immediately after stopping the blender, withdraw four 20-ml portions of blended sludge, and place them in separate, tared 125-ml Erlenmeyer flasks. Reweigh each flask to determine the exact amount of sludge added.

8.3 Sample Holding Time. Samples shall be analyzed within the time specified in the applicable subpart of the regulations.

9.0 Quality Control

Section	Quality control measure	Effect
10.0	Spectrophotometer calibration	Ensure linearity of spectrophotometer response to standards.
11.0	Check for matrix effects	Eliminate matrix effects.

10.0 Calibration and Standardization

Same as Method 101A, Section 10.2.

11.0 Analytical Procedures

11.1 Solids Content of Blended Sludge. Dry one of the 20-ml blended samples from Section 8.2 in an oven at 105 °C (221 °F) to constant weight. Cool in a desiccator, weigh and record the dry weight of the sample.

11.2 Aqua Regia Digestion of Blended Samples.

11.2.1 To each of the three remaining 20-ml samples from Section 8.2 add 25 ml of aqua regia, and digest the on a hot plate at low heat (do not boil) for 30 min, or until samples are a pale yellow-brown color and are void of the dark brown color characteristic of organic matter. Remove from hotplate and allow to cool.

11.2.2 Filter each digested sample separately through an S and S No. 588 filter or equivalent, and rinse the filter contents with 50 ml of water. Transfer the filtrate and filter washing to a 100-ml volumetric flask, and carefully dilute to volume with water.

11.3 Solids Content of the Sludge Before Blending. Remove two 100-ml portions of mixed sludge from the mortar mixer and place in separate, tared 400-ml beakers. Reweigh each beaker to determine the exact amount of sludge added. Dry in oven at 105 °C (221 °F) and cool in a desiccator to constant weight.

11.4 Analysis for Mercury. Analyze the three aqua regia-digested samples using the procedures outlined in Method 101A, Section 11.0.

12.0 Data Analysis and Calculations

12.1 Nomenclature.

C_m= Concentration of Hg in the digested sample, µg/g.

F_{sb}= Weight fraction of solids in the blended sludge.

F_{sm}= Weight fraction of solids in the collected sludge after mixing.

M = Hg content of the sewage sludge (on a dry basis), µg/g.

m = Mass of Hg in the aliquot of digested sample analyzed, µg.

n = number of digested samples (specified in Section 11.2 as three).

V_a= Volume of digested sample analyzed, ml.

V_s= Volume of digested sample, ml.

W_b= Weight of empty sample beaker, g.

W_{bs}= Weight of sample beaker and sample, g.

W_{bd}= Weight of sample beaker and sample after drying, g.

W_f= Weight of empty sample flask, g.

W_{fd}= Weight of sample flask and sample after drying, g.

W_{fs}= Weight of sample flask and sample, g.

12.2 Mercury Content of Digested Sample (Wet Basis).

12.2.1 For each sample analyzed for Hg content, calculate the arithmetic mean maximum absorbance of the two consecutive samples whose peak heights agree ±3 percent of their average. Correct this average value for the contribution of the blank. Use the calibration curve and these corrected averages to determine the final Hg concentration in the solution cell for each sludge sample.

12.2.2 Calculate the average Hg concentration of the digested samples by correcting for any dilutions made to bring the sample into the working range of the spectrophotometer and for the weight of the sludge portion digested, using Equation 105–1.

$$\bar{C}_m = \sum_{i=1}^{n} \left[\frac{mV_s}{V_a\left(W_{fs} - W_f\right)} \right]_i \qquad \text{Eq. 105-1}$$

12.3 Solids Content of Blended Sludge. Determine the solids content of the blended sludge using Equation 105–2.

$$F_{sb} = 1 - \frac{W_{fs} - W_{fd}}{W_{fs} - W_f} \qquad \text{Eq. 105-2}$$

12.4 Solids Content of Bulk Sample (before blending but, after mixing in mortar mixer). Determine the solids content of each 100 ml aliquot (Section 11.3), and average the results.

$$F_{sm} = 1 - \frac{W_{bs} - W_{bd}}{W_{bs} - W_b} \qquad \text{Eq. 105-3}$$

12.5 Mercury Content of Bulk Sample (Dry Basis). Average the results from the three samples from each 8-hr composite sample, and calculate the Hg concentration of the composite sample on a dry basis.

$$M = \frac{\bar{C}_m}{F_{sb}} \qquad \text{Eq. 105-4}$$

13.0 Method Performance

13.1 Range. The range of this method is 0.2 to 5 micrograms per gram; it may be extended by increasing or decreasing sample size.

14.0 Pollution Prevention.[Reserved]

15.0 Waste Management.[Reserved]

16.0 References

1. Bishop, J.N. Mercury in Sediments. Ontario Water Resources Commission. Toronto, Ontario, Canada. 1971.

2. Salma, M. Private Communication. EPA California/Nevada Basin Office. Alameda, California.

3. Hatch, W.R. and W.L. Ott. Determination of Sub-Microgram Quantities of Mercury by Atomic Absorption Spectrophotometry. Analytical Chemistry. 40:2085. 1968.

4. Bradenberger, H., and H. Bader. The Determination of Nanogram Levels of Mercury in Solution by a Flameless Atomic Absorption Technique. Atomic Absorption Newsletter. 6:101. 1967.

5. Analytical Quality Control Laboratory (AQCL). Mercury in Sediment (Cold Vapor Technique) (Provisional Method). U.S. Environmental Protection Agency. Cincinnati, Ohio. April 1972.

6. Kopp, J.F., M.C. Longbottom, and L.B. Lobring. “Cold Vapor” Method for Determining Mercury. Journal AWWA. 64(1):20–25. 1972.

7. Manual of Methods for Chemical Analysis of Water and Wastes. U.S. Environmental Protection Agency. Cincinnati, Ohio. Publication No. EPA–624/2–74–003. December 1974. pp. 118–138.

8. Mitchell, W.J., M.R. Midgett, J. Suggs, R.J. Velton, and D. Albrink. Sampling and Homogenizing Sewage for Analysis. Environmental Monitoring and Support Laboratory, Office of Research and Development, U.S. Environmental Protection Agency. Research Triangle Park, N.C. March 1979. p. 7.

17.0 Tables, Diagrams, Flowcharts, and Validation Data.[Reserved]

Method 106—Determination of Vinyl Chloride Emissions From Stationary Sources

1.0 Scope and Application

1.1 Analytes.

Analyte	CAS No.	Sensitivity
Vinyl Chloride (CH_2:CHCl)	75–01–4	Dependent upon analytical equipment.

1.2 Applicability. This method is applicable for the determination of vinyl chloride emissions from ethylene dichloride, vinyl chloride, and polyvinyl chloride manufacturing processes. This method does not measure vinyl chloride contained in particulate matter.

1.3 Data Quality Objectives. Adherence to the requirements of this method will enhance the quality of the data obtained from air pollutant sampling methods.

2.0 Summary of Method

2.1 An integrated bag sample of stack gas containing vinyl chloride is subjected to GC analysis using a flame ionization detector (FID).

3.0 Definitions.[Reserved]

4.0 Interferences

4.1 Resolution interferences of vinyl chloride may be encountered on some sources. Therefore, the chromatograph operator should select the column and operating parameters best suited to the particular analysis requirements. The selection made is subject to approval of the Administrator. Approval is automatic, provided that confirming data are produced through an adequate supplemental analytical technique, and that the data are available for review by the Administrator. An example of this would be analysis with a different column or GC/mass spectroscopy.

5.0 Safety

5.1 Disclaimer. This method may involve hazardous materials, operations, and equipment. This test method may not address all of the safety problems associated with its use. It is the responsibility of the user of this test method to establish appropriate safety and health practices and determine the applicability of regulatory limitations prior to performing this test method.

5.2 Toxic Analyte. Care must be exercised to prevent exposure of sampling personnel to vinyl chloride, which is a carcinogen.

6.0 Equipment and Supplies

6.1 Sample Collection (see Figure 106–1). The sampling train consists of the following components:

6.1.1 Probe. Stainless steel, borosilicate glass, Teflon tubing (as stack temperature permits), or equivalent, equipped with a glass wool plug to remove particulate matter.

6.1.2 Sample Lines. Teflon, 6.4-mm outside diameter, of sufficient length to connect probe to bag. Use a new unused piece for each series of bag samples that constitutes an emission test, and discard upon completion of the test.

6.1.3 Quick Connects. Stainless steel, male (2) and female (2), with ball checks (one pair without), located as shown in Figure 106–1.

6.1.4 Tedlar Bags. 50- to 100-liter capacity, to contain sample. Aluminized Mylar bags may be used if the samples are analyzed within 24 hours of collection.

6.1.5 Bag Containers. Rigid leak-proof containers for sample bags, with covering to protect

contents from sunlight.

6.1.6 Needle Valve. To adjust sample flow rates.

6.1.7 Pump. Leak-free, with minimum of 2-liter/min capacity.

6.1.8 Charcoal Tube. To prevent admission of vinyl chloride and other organics to the atmosphere in the vicinity of samplers.

6.1.9 Flowmeter. For observing sampling flow rate; capable of measuring a flow range from 0.10 to 1.00 liter/min.

6.1.10 Connecting Tubing. Teflon, 6.4-mm outside diameter, to assemble sampling train (Figure 106–1).

6.1.11 Tubing Fittings and Connectors. Teflon or stainless steel, to assemble sampling training.

6.2 Sample Recovery. Teflon tubing, 6.4-mm outside diameter, to connect bag to GC sample loop. Use a new unused piece for each series of bag samples that constitutes an emission test, and discard upon conclusion of analysis of those bags.

6.3 Analysis. The following equipment is required:

6.3.1 Gas Chromatograph. With FID potentiometric strip chart recorder and 1.0 to 5.0-ml heated sampling loop in automatic sample valve. The chromatographic system shall be capable of producing a response to 0.1-ppmv vinyl chloride that is at least as great as the average noise level. (Response is measured from the average value of the base line to the maximum of the wave form, while standard operating conditions are in use.)

6.3.2 Chromatographic Columns. Columns as listed below. Other columns may be used provided that the precision and accuracy of the analysis of vinyl chloride standards are not impaired and that information is available for review confirming that there is adequate resolution of vinyl chloride peak. (Adequate resolution is defined as an area overlap of not more than 10 percent of the vinyl chloride peak by an interferent peak. Calculation of area overlap is explained in Procedure 1 of appendix C to this part: “Determination of Adequate Chromatographic Peak Resolution.”)

6.3.2.1 Column A. Stainless steel, 2.0 m by 3.2 mm, containing 80/100-mesh Chromasorb 102.

6.3.2.2 Column B. Stainless steel, 2.0 m by 3.2 mm, containing 20 percent GE SF–96 on 60/ip-mesh Chromasorb P AW; or stainless steel, 1.0 m by 3.2 mm containing 80/100-mesh Porapak T. Column B is required as a secondary column if acetaldehyde is present. If used, column B is placed after column A. The combined columns should be operated at 120 °C (250 °F).

6.3.3 Rate Meters (2). Rotameter , or equivalent, 100-ml/min capacity, with flow control valves.

6.3.4 Gas Regulators. For required gas cylinders.

6.3.5 Temperature Sensor. Accurate to ±1 °C (±2 °F), to measure temperature of heated sample loop at time of sample injection.

6.3.6 Barometer. Accurate to ±5 mm Hg, to measure atmospheric pressure around GC during sample analysis.

6.3.7 Pump. Leak-free, with minimum of 100-ml/min capacity.

6.3.8 Recorder. Strip chart type, optionally equipped with either disc or electronic integrator.

6.3.9 Planimeter. Optional, in place of disc or electronic integrator on recorder, to measure chromatograph peak areas.

6.4 Calibration and Standardization.

6.4.1 Tubing. Teflon, 6.4-mm outside diameter, separate pieces marked for each calibration concentration.

Note: The following items are required only if the optional standard gas preparation procedures (Section 10.1) are followed.

6.4.2 Tedlar Bags. Sixteen-inch-square size, with valve; separate bag marked for each calibration concentration.

6.4.3 Syringes. 0.5-ml and 50-µl, gas tight, individually calibrated to dispense gaseous vinyl chloride.

6.4.4 Dry Gas Meter with Temperature and Pressure Gauges. Singer Model DTM–115 with 802 index, or equivalent, to meter nitrogen in preparation of standard gas mixtures, calibrated at the flow rate used to prepare standards.

7.0 Reagents and Standards

7.1 Analysis. The following reagents are required for analysis.

7.1.1 Helium or Nitrogen. Purity 99.9995 percent or greater, for chromatographic carrier gas.

7.1.2 Hydrogen. Purity 99.9995 percent or greater.

7.1.3 Oxygen or Air. Either oxygen (purity 99.99 percent or greater) or air (less than 0.1 ppmv total hydrocarbon content), as required by detector.

7.2 Calibration. Use one of the following options: either Sections 7.2.1 and 7.2.2, or Section 7.2.3.

7.2.1 Vinyl Chloride. Pure vinyl chloride gas certified by the manufacturer to contain a minimum of 99.9 percent vinyl chloride. If the gas manufacturer maintains a bulk cylinder supply of 99.9+ percent vinyl chloride, the certification analysis may have been performed on this supply, rather than on each gas cylinder prepared from this bulk supply. The date of gas cylinder preparation and the certified analysis must have been affixed to the cylinder before shipment from the gas manufacturer to the buyer.

7.2.2 Nitrogen. Same as described in Section 7.1.1.

7.2.3 Cylinder Standards. Gas mixture standards (50-,10-, and 5 ppmv vinyl chloride) in nitrogen cylinders may be used to directly prepare a chromatograph calibration curve as described in Section 10.3 if the following conditions are met: (a) The manufacturer certifies the gas composition with an accuracy of ±3 percent or better. (b) The manufacturer recommends a maximum shelf life over which the gas concentration does not change by greater than ±5 percent from the certified value. (c) The manufacturer affixes the date of gas cylinder preparation, certified vinyl chloride concentration, and recommended maximum shelf to the cylinder before shipment to the buyer.

7.2.3.1 Cylinder Standards Certification. The manufacturer shall certify the concentration of vinyl chloride in nitrogen in each cylinder by (a) directly analyzing each cylinder and (b) calibrating his analytical procedure on the day of cylinder analysis. To calibrate his analytical procedure, the manufacturer shall use as a minimum, a three point calibration curve. It is recommended that the manufacturer maintain (1) a high concentration calibration standard (between 50 and 100 ppmv)

to prepare his calibration curve by an appropriate dilution technique and (2) a low-concentration calibration standard (between 5 and 10 ppmv) to verify the dilution technique used. If the difference between the apparent concentration read from the calibration curve and the true concentration assigned to the low-concentration calibration standard exceeds 5 percent of the true concentration, the manufacturer shall determine the source of error and correct it, then repeat the three-point calibration.

7.2.3.2 Verification of Manufacturer's Calibration Standards. Before using a standard, the manufacturer shall verify each calibration standard (a) by comparing it to gas mixtures prepared (with 99 mole percent vinyl chloride) in accordance with the procedure described in Section 7.2.1 or (b) calibrating it against vinyl chloride cylinder Standard Reference Materials (SRM's) prepared by the National Institute of Standards and Technology, if such SRM's are available. The agreement between the initially determined concentration value and the verification concentration value must be ±5 percent. The manufacturer must reverify all calibration standards on a time interval consistent with the shelf life of the cylinder standards sold.

7.2.4 Audit Cylinder Standards.

7.2.4.1 Gas mixture standards with concentrations known only to the person supervising the analysis of samples. The concentrations of the audit cylinders should be: one low-concentration cylinder in the range of 5 to 20 ppmv vinyl chloride and one high-concentration cylinder in the range of 20 to 50 ppmv. When available, obtain audit samples from the appropriate EPA Regional Office or from the responsible enforcement authority.

Note: The responsible enforcement agency should be notified at least 30 days prior to the test date to allow sufficient time for sample delivery.

7.2.4.2 Alternatively, audit cylinders obtained from a commercial gas manufacturer may be used provided: (a) the gas meets the conditions described in Section 7.2.3, (b) the gas manufacturer certifies the audit cylinder as described in Section 7.2.3.1, and (c) the gas manufacturer obtains an independent analysis of the audit cylinders to verify this analysis. Independent analysis is defined here to mean analysis performed by an individual different than the individual who performs the gas manufacturer's analysis, while using calibration standards and analysis equipment different from those used for the gas manufacturer's analysis. Verification is complete and acceptable when the independent analysis concentration is within 5 percent of the gas manufacturer's concentration.

8.0 Sample Collection, Preservation, Storage, and Transport

Note: Performance of this method should not be attempted by persons unfamiliar with the operation of a gas chromatograph (GC) nor by those who are unfamiliar with source sampling, because knowledge beyond the scope of this presentation is required.

8.1 Bag Leak-Check. The following leak-check procedure is recommended, but not required, prior to sample collection. The post-test leak-check procedure is mandatory. Connect a water manometer and pressurize the bag to 5 to 10 cm H_2O (2 to 4 in. H_2O). Allow to stand for 10 min. Any displacement in the water manometer indicates a leak. Also, check the rigid container for leaks in this manner.

Note: An alternative leak-check method is to pressurize the bag to 5 to 10 cm H2O and allow it to stand overnight. A deflated bag indicates a leak. For each sample bag in its rigid container, place a rotameter in line between the bag and the pump inlet. Evacuate the bag. Failure of the rotameter to register zero flow when the bag appears to be empty indicates a leak.

8.2 Sample Collection. Assemble the sample train as shown in Figure 106–1. Join the quick connects as illustrated, and determine that all connection between the bag and the probe are tight. Place the end of the probe at the centroid of the stack and start the pump with the needle

valve adjusted to yield a flow that will fill over 50 percent of bag volume in the specific sample period. After allowing sufficient time to purge the line several times, change the vacuum line from the container to the bag and evacuate the bag until the rotameter indicates no flow. Then reposition the sample and vacuum lines and begin the actual sampling, keeping the rate proportional to the stack velocity. At all times, direct the gas exiting the rotameter away from sampling personnel. At the end of the sample period, shut off the pump, disconnect the sample line from the bag, and disconnect the vacuum line from the bag container. Protect the bag container from sunlight.

8.3 Sample Storage. Keep the sample bags out of direct sunlight. When at all possible, analysis is to be performed within 24 hours, but in no case in excess of 72 hours of sample collection. Aluminized Mylar bag samples must be analyzed within 24 hours.

8.4 Post-test Bag Leak-Check. Subsequent to recovery and analysis of the sample, leak-check the sample bag according to the procedure outlined in Section 8.1.

9.0 Quality Control

9.1 Miscellaneous Quality Control

Section	Quality control measure	Effect
10.3	Chromatograph calibration	Ensure precision and accuracy of chromatograph.
11.1	Audit sample analysis	Evaluate analytical technique and standards preparation.

9.2 Immediately after the preparation of the calibration curve and prior to the sample analyses, perform the analysis audit described in appendix C, Procedure 2: “Procedure for Field Auditing GC Analysis.”

10.0 Calibration and Standardization

Note: Maintain a laboratory log of all calibrations.

10.1 Preparation of Vinyl Chloride Standard Gas Mixtures. (Optional Procedure-delete if cylinder standards are used.) Evacuate a 16-inch square Tedlar bag that has passed a leak-check (described in Section 8.1) and meter in 5.0 liters of nitrogen. While the bag is filling, use the 0.5-ml syringe to inject 250 µl of 99.9+ percent vinyl chloride gas through the wall of the bag. Upon withdrawing the syringe, immediately cover the resulting hole with a piece of adhesive tape. The bag now contains a vinyl chloride concentration of 50 ppmv. In a like manner use the 50 µl syringe to prepare gas mixtures having 10-and 5-ppmv vinyl chloride concentrations. Place each bag on a smooth surface and alternately depress opposite sides of the bag 50 times to further mix the gases. These gas mixture standards may be used for 10 days from the date of preparation, after which time new gas mixtures must be prepared. (Caution: Contamination may be a problem when a bag is reused if the new gas mixture standard is a lower concentration than the previous gas mixture standard.)

10.2 Determination of Vinyl Chloride Retention Time. (This section can be performed simultaneously with Section 10.3.) Establish chromatograph conditions identical with those in Section 11.3. Determine proper attenuator position. Flush the sampling loop with helium or nitrogen and activate the sample valve. Record the injection time, sample loop temperature, column temperature, carrier gas flow rate, chart speed, and attenuator setting. Record peaks and detector responses that occur in the absence of vinyl chloride. Maintain conditions with the equipment plumbing arranged identically to Section 11.2, and flush the sample loop for 30 seconds at the rate of 100 ml/min with one of the vinyl chloride calibration mixtures. Then activate

the sample valve. Record the injection time. Select the peak that corresponds to vinyl chloride. Measure the distance on the chart from the injection time to the time at which the peak maximum occurs. This quantity divided by the chart speed is defined as the retention time. Since other organics may be present in the sample, positive identification of the vinyl chloride peak must be made.

10.3 Preparation of Chromatograph Calibration Curve. Make a GC measurement of each gas mixture standard (described in Section 7.2.3 or 10.1) using conditions identical to those listed in Sections 11.2 and 11.3. Flush the sampling loop for 30 seconds at the rate of 100 ml/min with one of the standard mixtures, and activate the sample valve. Record the concentration of vinyl chloride injected (C_c), attenuator setting, chart speed, peak area, sample loop temperature, column temperature, carrier gas flow rate, and retention time. Record the barometric pressure. Calculate A_c, the peak area multiplied by the attenuator setting. Repeat until two consecutive injection areas are within 5 percent, then plot the average of those two values versus C_c. When the other standard gas mixtures have been similarly analyzed and plotted, draw a straight line through the points derived by the least squares method. Perform calibration daily, or before and after the analysis of each emission test set of bag samples, whichever is more frequent. For each group of sample analyses, use the average of the two calibration curves which bracket that group to determine the respective sample concentrations. If the two calibration curves differ by more than 5 percent from their mean value, then report the final results by both calibration curves.

11.0 Analytical Procedure

11.1 Audit Sample Analysis. Immediately after the preparation of the calibration curve and prior to the sample analyses, perform the analysis audit described in Procedure 2 of appendix C to this part: “Procedure for Field Auditing GC Analysis.”

11.2 Sample Recovery. With a new piece of Teflon tubing identified for that bag, connect a bag inlet valve to the gas chromatograph sample valve. Switch the valve to receive gas from the bag through the sample loop. Arrange the equipment so the sample gas passes from the sample valve to 100-ml/min rotameter with flow control valve followed by a charcoal tube and a 1-in. H_2O pressure gauge. Maintain the sample flow either by a vacuum pump or container pressurization if the collection bag remains in the rigid container. After sample loop purging is ceased, allow the pressure gauge to return to zero before activating the gas sampling valve.

11.3 Analysis.

11.3.1 Set the column temperature to 100 °C (210 °F) and the detector temperature to 150 °C (300 °F). When optimum hydrogen and oxygen (or air) flow rates have been determined, verify and maintain these flow rates during all chromatography operations. Using helium or nitrogen as the carrier gas, establish a flow rate in the range consistent with the manufacturer's requirements for satisfactory detector operation. A flow rate of approximately 40 ml/min should produce adequate separations. Observe the base line periodically and determine that the noise level has stabilized and that base line drift has ceased. Purge the sample loop for 30 seconds at the rate of 100 ml/min, shut off flow, allow the sample loop pressure to reach atmospheric pressure as indicated by the H_2O manometer, then activate the sample valve. Record the injection time (the position of the pen on the chart at the time of sample injection), sample number, sample loop temperature, column temperature, carrier gas flow rate, chart speed, and attenuator setting. Record the barometric pressure. From the chart, note the peak having the retention time corresponding to vinyl chloride as determined in Section 10.2. Measure the vinyl chloride peak area, A_m, by use of a disc integrator, electronic integrator, or a planimeter. Measure and record the peak heights, H_m. Record $A_m$and retention time. Repeat the injection at least two times or until two consecutive values for the total area of the vinyl chloride peak agree within 5 percent of their average. Use the average value for these two total areas to compute the bag concentration.

11.3.2 Compare the ratio of $H_m$to $A_m$for the vinyl chloride sample with the same ratio for the

standard peak that is closest in height. If these ratios differ by more than 10 percent, the vinyl chloride peak may not be pure (possibly acetaldehyde is present) and the secondary column should be employed (see Section 6.3.2.2).

11.4 Determination of Bag Water Vapor Content. Measure the ambient temperature and barometric pressure near the bag. From a water saturation vapor pressure table, determine and record the water vapor content of the bag, B_{wb}, as a decimal figure. (Assume the relative humidity to be 100 percent unless a lesser value is known.)

12.0 Calculations and Data Analysis

12.1 Nomenclature.

A_m= Measured peak area.

A_f= Attenuation factor.

B_{wb}= Water vapor content of the bag sample, as analyzed, volume fraction.

C_b= Concentration of vinyl chloride in the bag, ppmv.

C_c= Concentration of vinyl chloride in the standard sample, ppmv.

P_i= Laboratory pressure at time of analysis, mm Hg.

P_r= Reference pressure, the laboratory pressure recorded during calibration, mm Hg.

T_i= Absolute sample loop temperature at the time of analysis, °K (°R).

T_r= Reference temperature, the sample loop temperature recorded during calibration, °K (°R).

12.2 Sample Peak Area. Determine the sample peak area, A_c, as follows:

$$A_c = A_m A_f \qquad \text{Eq. 106-1}$$

12.3 Vinyl Chloride Concentration. From the calibration curves prepared in Section 10.3, determine the average concentration value of vinyl chloride, C_c, that corresponds to A_c, the sample peak area. Calculate the concentration of vinyl chloride in the bag, C_b, as follows:

$$C_b = \frac{C_c P_r T_i}{P_i T_r \left(1 - B_{wb}\right)} \qquad \text{Eq. 106-2}$$

13.0 Method Performance

13.1 Analytical Range. This method is designed for the 0.1 to 50 parts per million by volume (ppmv) range. However, common gas chromatograph (GC) instruments are capable of detecting 0.02 ppmv vinyl chloride. With proper calibration, the upper limit may be extended as needed.

14.0 Pollution Prevention,[Reserved]

15.0 Waste Management,[Reserved]

16.0 References

1. Brown D.W., E.W. Loy, and M.H. Stephenson. Vinyl Chloride Monitoring Near the B. F. Goodrich Chemical Company in Louisville, KY. Region IV, U.S. Environmental Protection Agency, Surveillance and Analysis Division, Athens, GA. June 24, 1974.

2. G.D. Clayton and Associates. Evaluation of a Collection and Analytical Procedure for Vinyl Chloride in Air. U.S. Environmental Protection Agency, Research Triangle Park, N.C. EPA Contract No. 68–02–1408, Task Order No. 2, EPA Report No. 75–VCL–1. December 13, 1974.

3. Midwest Research Institute. Standardization of Stationary Source Emission Method for Vinyl Chloride. U.S. Environmental Protection Agency, Research Triangle Park, N.C. Publication No. EPA–600/4–77–026. May 1977.

4. Scheil, G. and M.C. Sharp. Collaborative Testing of EPA Method 106 (Vinyl Chloride) that Will Provide for a Standardized Stationary Source Emission Measurement Method. U.S. Environmental Protection Agency, Research Triangle Park, N.C. Publication No. EPA 600/4–78–058. October 1978.

17.0 Tables, Diagrams Flowcharts, and Validation Data.

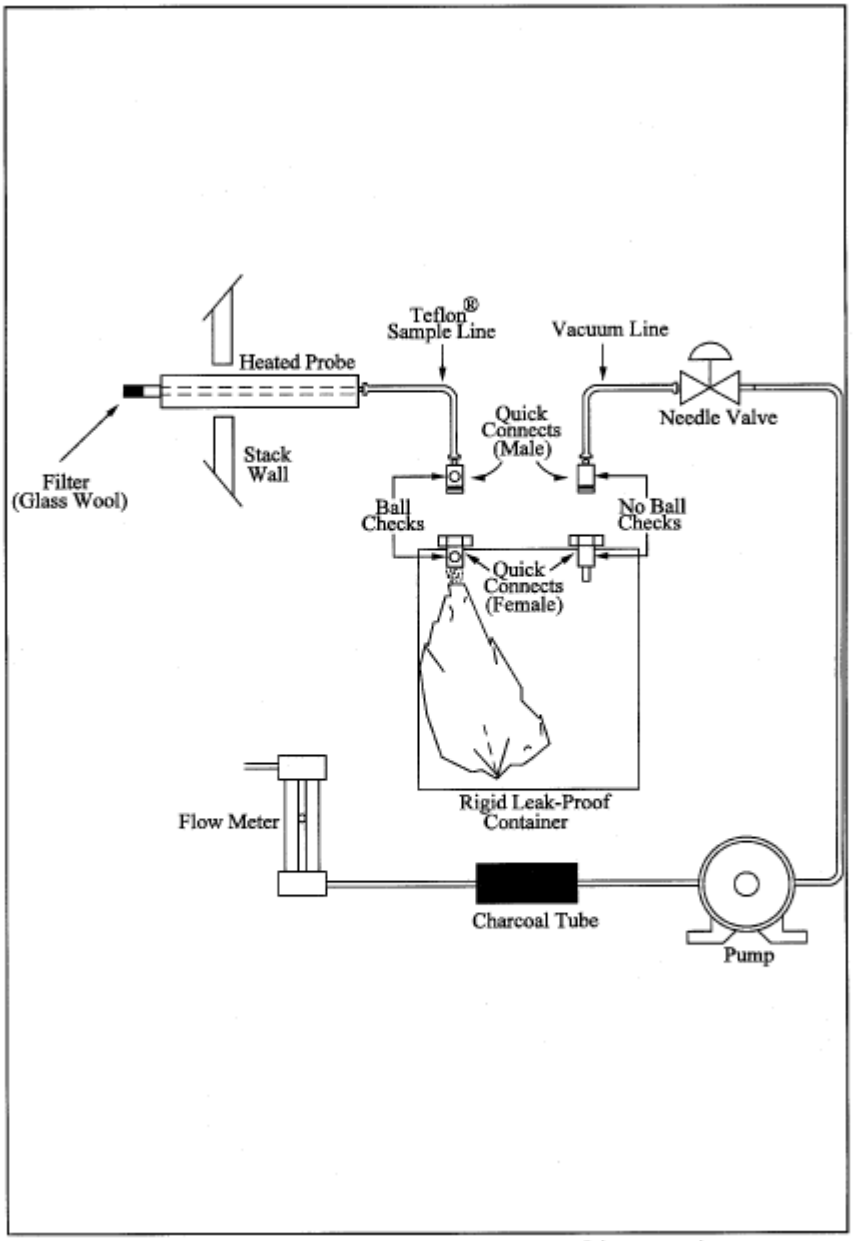

Figure 106-1. Integrated-bag sampling train.

Method 107—Determination of Vinyl Chloride Content of In-Process Wastewater Samples, and Vinyl Chloride Content of Polyvinyl Chloride Resin Slurry, Wet Cake, and Latex Samples

Note: Performance of this method should not be attempted by persons unfamiliar with the operation of a gas chromatograph (GC) nor by those who are unfamiliar with source sampling, because knowledge beyond the scope of this presentation is required. This method does not include all of the specifications (*e.g.,* equipment and supplies) and procedures (*e.g.,* sampling and analytical) essential to its performance. Some material is incorporated by reference from other methods in this part. Therefore, to obtain reliable results, persons using this method should have a thorough knowledge of at least the following additional test methods: Method 106.

1.0 Scope and Application

1.1 Analytes.

Analyte	CAS No.	Sensitivity
Vinyl Chloride (CH_2:CHCl)	75–01–4	Dependent upon analytical equipment.

1.2 Applicability. This method is applicable for the determination of the vinyl chloride monomer (VCM) content of in-process wastewater samples, and the residual vinyl chloride monomer (RCVM) content of polyvinyl chloride (PVC) resins, wet, cake, slurry, and latex samples. It cannot be used for polymer in fused forms, such as sheet or cubes. This method is not acceptable where methods from section 304(h) of the Clean Water Act, 33 U.S.C. 1251 *et seq.* (the Federal Water Pollution Control Amendments of 1972 as amended by the Clean Water Act of 1977) are required.

1.3 Data Quality Objectives. Adherence to the requirements of this method will enhance the quality of the data obtained from air pollutant sampling methods.

2.0 Summary of Method

2.1 The basis for this method relates to the vapor equilibrium that is established at a constant known temperature in a closed system between RVCM, PVC resin, water, and air. The RVCM in a PVC resin will equilibrate rapidly in a closed vessel, provided that the temperature of the PVC resin is maintained above the glass transition temperature of that specific resin.

2.2 A sample of PVC or in-process wastewater is collected in a vial or bottle and is conditioned. The headspace in the vial or bottle is then analyzed for vinyl chloride using gas chromatography with a flame ionization detector.

3.0 Definitions[Reserved]

4.0 Interferences

4.1 The chromatograph columns and the corresponding operating parameters herein described normally provide an adequate resolution of vinyl chloride; however, resolution interferences may be encountered on some sources. Therefore, the chromatograph operator shall select the column and operating parameters best suited to his particular analysis requirements, subject to the approval of the Administrator. Approval is automatic provided that confirming data are produced through an adequate supplemental analytical technique, such as analysis with a different column or GC/mass spectroscopy, and that these data are made available for review by the Administrator.

5.0 Safety

5.1 Disclaimer. This method may involve hazardous materials, operations, and equipment. This test method may not address all of the safety problems associated with its use. It is the responsibility of the user of this test method to establish appropriate safety and health practices and determine the applicability of regulatory limitations prior to performing this test method.

5.2 Toxic Analyte. Care must be exercised to prevent exposure of sampling personnel to vinyl chloride, which is a carcinogen. Do not release vinyl chloride to the laboratory atmosphere during preparation of standards. Venting or purging with VCM/air mixtures must be held to a minimum. When they are required, the vapor must be routed to outside air. Vinyl chloride, even at low ppm levels, must never be vented inside the laboratory. After vials have been analyzed, the gas must be vented prior to removal of the vial from the instrument turntable. Vials must be vented through a hypodermic needle connected to an activated charcoal tube to prevent release of vinyl chloride into the laboratory atmosphere. The charcoal must be replaced prior to vinyl chloride

breakthrough.

6.0 Equipment and Supplies

6.1 Sample Collection. The following equipment is required:

6.1.1 Glass bottles. 60-ml (2-oz) capacity, with wax-lined screw-on tops, for PVC samples.

6.1.2 Glass Vials. Headspace vials, with Teflon-faced butyl rubber sealing discs, for water samples.

6.1.3 Adhesive Tape. To prevent loosening of bottle tops.

6.2 Sample Recovery. The following equipment is required:

6.2.1 Glass Vials. Headspace vials, with butyl rubber septa and aluminum caps. Silicone rubber is not acceptable.

6.2.2 Analytical Balance. Capable of determining sample weight within an accuracy of ±1 percent.

6.2.3 Vial Sealer. To seal headspace vials.

6.2.4 Syringe. 100-ml capacity.

6.3 Analysis. The following equipment is required:

6.3.1 Headspace Sampler and Chromatograph. Capable of sampling and analyzing a constant amount of headspace gas from a sealed vial, while maintaining that vial at a temperature of 90 °C ±0.5 °C (194 °F ±0.9 °F). The chromatograph shall be equipped with a flame ionization detector (FID). Perkin-Elmer Corporation Models F–40, F–42, F–45, HS–6, and HS–100, and Hewlett-Packard Corporation Model 19395A have been found satisfactory. Chromatograph backflush capability may be required.

6.3.2 Chromatographic Columns. Stainless steel 1 m by 3.2 mm and 2 m by 3.2 mm, both containing 50/80-mesh Porapak Q. Other columns may be used provided that the precision and accuracy of the analysis of vinyl chloride standards are not impaired and information confirming that there is adequate resolution of the vinyl chloride peak are available for review. (Adequate resolution is defined as an area overlap of not more than 10 percent of the vinyl chloride peak by an interferant peak. Calculation of area overlap is explained in Procedure 1 of appendix C to this part: “Determination of Adequate Chromatographic Peak Resolution.”) Two 1.83 m columns, each containing 1 percent Carbowax 1500 on Carbopak B, have been found satisfactory for samples containing acetaldehyde.

6.3.3 Temperature Sensor. Range 0 to 100 °C (32 to 212 °F) accurate to 0.1 °C.

6.3.4 Integrator-Recorder. To record chromatograms.

6.3.5 Barometer. Accurate to 1 mm Hg.

6.3.6 Regulators. For required gas cylinders.

6.3.7 Headspace Vial Pre-Pressurizer. Nitrogen pressurized hypodermic needle inside protective shield.

7.0 Reagents and Standards

7.1 Analysis. Same as Method 106, Section 7.1, with the addition of the following:

7.1.1 Water. Interference-free.

7.2 Calibration. The following items are required for calibration:

7.2.1 Cylinder Standards (4). Gas mixture standards (50-, 500-, 2000- and 4000-ppm vinyl chloride in nitrogen cylinders). Cylinder standards may be used directly to prepare a chromatograph calibration curve as described in Section 10.3, if the following conditions are met: (a) The manufacturer certifies the gas composition with an accuracy of ±3 percent or better (see Section 7.2.1.1). (b) The manufacturer recommends a maximum shelf life over which the gas concentration does not change by greater than ±5 percent from the certified value. (c) The manufacturer affixes the date of gas cylinder preparation, certified vinyl chloride concentration, and recommended maximum shelf life to the cylinder before shipment to the buyer.

7.2.1.1 Cylinder Standards Certification. The manufacturer shall certify the concentration of vinyl chloride in nitrogen in each cylinder by (a) directly analyzing each cylinder and (b) calibrating the analytical procedure on the day of cylinder analysis. To calibrate the analytical procedure, the manufacturer shall use, as a minimum, a 3-point calibration curve. It is recommended that the manufacturer maintain (1) a high-concentration calibration standard (between 4000 and 8000 ppm) to prepare the calibration curve by an appropriate dilution technique and (2) a low-concentration calibration standard (between 50 and 500 ppm) to verify the dilution technique used. If the difference between the apparent concentration read from the calibration curve and the true concentration assigned to the low-concentration calibration standard exceeds 5 percent of the true concentration, the manufacturer shall determine the source of error and correct it, then repeat the 3-point calibration.

7.2.1.2 Verification of Manufacturer's Calibration Standards. Before using, the manufacturer shall verify each calibration standard by (a) comparing it to gas mixtures prepared (with 99 mole percent vinyl chloride) in accordance with the procedure described in Section 10.1 of Method 106 or by (b) calibrating it against vinyl chloride cylinder Standard Reference Materials (SRMs) prepared by the National Institute of Standards and Technology, if such SRMs are available. The agreement between the initially determined concentration value and the verification concentration value must be within 5 percent. The manufacturer must reverify all calibration standards on a time interval consistent with the shelf life of the cylinder standards sold.

8.0 Sample Collection, Preservation, Storage, and Transport

8.1 Sample Collection.

8.1.1 PVC Sampling. Allow the resin or slurry to flow from a tap on the tank or silo until the tap line has been well purged. Extend and fill a 60-ml sample bottle under the tap, and immediately tighten a cap on the bottle. Wrap adhesive tape around the cap and bottle to prevent the cap from loosening. Place an identifying label on each bottle, and record the date, time, and sample location both on the bottles and in a log book.

8.1.2 Water Sampling. At the sampling location fill the vials bubble-free to overflowing so that a convex meniscus forms at the top. The excess water is displaced as the sealing disc is carefully placed, with the Teflon side down, on the opening of the vial. Place the aluminum seal over the disc and the neck of the vial, and crimp into place. Affix an identifying label on the bottle, and record the date, time, and sample location both on the vials and in a log book.

8.2 Sample Storage. All samples must be analyzed within 24 hours of collection, and must be refrigerated during this period.

9.0 Quality Control

Section	Quality control measure	Effect
10.3	Chromatograph calibration	Ensure precision and accuracy of chromatograph.

10.0 Calibration and Standardization

Note: Maintain a laboratory log of all calibrations.

10.1 Preparation of Standards. Calibration standards are prepared as follows: Place 100 µl or about two equal drops of distilled water in the sample vial, then fill the vial with the VCM/nitrogen standard, rapidly seat the septum, and seal with the aluminum cap. Use a1/8-in. stainless steel line from the cylinder to the vial. Do not use rubber or Tygon tubing. The sample line from the cylinder must be purged (into a properly vented hood) for several minutes prior to filling the vials. After purging, reduce the flow rate to between 500 and 1000 cc/min. Place end of tubing into vial (near bottom). Position a septum on top of the vial, pressing it against the1/8-in. filling tube to minimize the size of the vent opening. This is necessary to minimize mixing air with the standard in the vial. Each vial is to be purged with standard for 90 seconds, during which time the filling tube is gradually slid to the top of the vial. After the 90 seconds, the tube is removed with the septum, simultaneously sealing the vial. Practice will be necessary to develop good technique. Rubber gloves should be worn during the above operations. The sealed vial must then be pressurized for 60 seconds using the vial prepressurizer. Test the vial for leakage by placing a drop of water on the septum at the needle hole. Prepressurization of standards is not required unless samples have been prepressurized.

10.2 Analyzer Calibration. Calibration is to be performed each 8-hour period the chromatograph is used. Alternatively, calibration with duplicate 50-, 500-, 2,000-, and 4,000-ppm standards (hereafter described as a four-point calibration) may be performed on a monthly basis, provided that a calibration confirmation test consisting of duplicate analyses of an appropriate standard is performed once per plant shift, or once per chromatograph carrousel operation (if the chromatograph operation is less frequent than once per shift). The criterion for acceptance of each calibration confirmation test is that both analyses of 500-ppm standards [2,000-ppm standards if dispersion resin (excluding latex resin) samples are being analyzed] must be within 5 percent of the most recent four-point calibration curve. If this criterion is not met, then a complete four-point calibration must be performed before sample analyses can proceed.

10.3 Preparation of Chromatograph Calibration Curve. Prepare two vials each of 50-, 500-, 2,000-, and 4,000-ppm standards. Run the calibration samples in exactly the same manner as regular samples. Plot A_s, the integrator area counts for each standard sample, versus C_c, the concentration of vinyl chloride in each standard sample. Draw a straight line through the points derived by the least squares method.

11.0 Analytical Procedure

11.1 Preparation of Equipment. Install the chromatographic column and condition overnight at 160 °C (320 °F). In the first operation, Porapak columns must be purged for 1 hour at 230 °C (450 °F).

Do not connect the exit end of the column to the detector while conditioning. Hydrogen and air to the detector must be turned off while the column is disconnected.

11.2 Flow Rate Adjustments. Adjust flow rates as follows:

11.2.1. Nitrogen Carrier Gas. Set regulator on cylinder to read 50 psig. Set regulator on chromatograph to produce a flow rate of 30.0 cc/min. Accurately measure the flow rate at the exit end of the column using the soap film flowmeter and a stopwatch, with the oven and column at

the analysis temperature. After the instrument program advances to the “B” (backflush) mode, adjust the nitrogen pressure regulator to exactly balance the nitrogen flow rate at the detector as was obtained in the “A” mode.

11.2.2. Vial Prepressurizer Nitrogen.

11.2.2.1 After the nitrogen carrier is set, solve the following equation and adjust the pressure on the vial prepressurizer accordingly.

$$P = \frac{T_1}{T_2}\left[P_1 - \frac{P_{w1} - P_{w2}}{7.50}\right] - 10kPa \qquad \text{Eq. 107-1}$$

Where:

T_1= Ambient temperature, °K (°R).

T_2= Conditioning bath temperature, °K (°R).

P_1= Gas chromatograph absolute dosing pressure (analysis mode), k Pa.

P_{w1}= Water vapor pressure 525.8 mm Hg @ 90 °C.

P_{w2}= Water vapor pressure 19.8 mm Hg @ 22 °C.

7.50 = mm Hg per k Pa.

10 kPa = Factor to adjust the prepressurized pressure to slightly less than the dosing pressure.

11.2.2.2 Because of gauge errors, the apparatus may over-pressurize the vial. If the vial pressure is at or higher than the dosing pressure, an audible double injection will occur. If the vial pressure is too low, errors will occur on resin samples because of inadequate time for head-space gas equilibrium. This condition can be avoided by running several standard gas samples at various pressures around the calculated pressure, and then selecting the highest pressure that does not produce a double injection. All samples and standards must be pressurized for 60 seconds using the vial prepressurizer. The vial is then placed into the 90 °C conditioning bath and tested for leakage by placing a drop of water on the septum at the needle hole. A clean, burr-free needle is mandatory.

11.2.3. Burner Air Supply. Set regulator on cylinder to read 50 psig. Set regulator on chromatograph to supply air to burner at a rate between 250 and 300 cc/min. Check with bubble flowmeter.

11.2.4. Hydrogen Supply. Set regulator on cylinder to read 30 psig. Set regulator on chromatograph to supply approximately 35 ±5 cc/min. Optimize hydrogen flow to yield the most sensitive detector response without extinguishing the flame. Check flow with bubble meter and record this flow.

11.3 Temperature Adjustments. Set temperatures as follows:

11.3.1. Oven (chromatograph column), 140 °C (280 °F).

11.3.2. Dosing Line, 150 °C (300 °F).

11.3.3. Injection Block, 170 °C (340 °F).

11.3.4. Sample Chamber, Water Temperature, 90 °C ±1.0 °C (194 °F ±1.8 °F).

11.4 Ignition of Flame Ionization Detector. Ignite the detector according to the manufacturer's instructions.

11.5 Amplifier Balance. Balance the amplifier according to the manufacturer's instructions.

11.6 Programming the Chromatograph. Program the chromatograph as follows:

11.6.1. I—Dosing or Injection Time. The normal setting is 2 seconds.

11.6.2. A—Analysis Time. The normal setting is approximately 70 percent of the VCM retention time. When this timer terminates, the programmer initiates backflushing of the first column.

11.6.3. B—Backflushing Time. The normal setting is double the analysis time.

11.6.4. W—Stabilization Time. The normal setting is 0.5 min to 1.0 min.

11.6.5. X—Number of Analyses Per Sample. The normal setting is one.

11.7. Sample Treatment. All samples must be recovered and analyzed within 24 hours after collection.

11.7.1 Resin Samples. The weight of the resin used must be between 0.1 and 4.5 grams. An exact weight must be obtained (within ±1 percent) for each sample. In the case of suspension resins, a volumetric cup can be prepared for holding the required amount of sample. When the cup is used, open the sample bottle, and add the cup volume of resin to the tared sample vial (tared, including septum and aluminum cap). Obtain the exact sample weight, add 100 ml or about two equal drops of water, and immediately seal the vial. Report this value on the data sheet; it is required for calculation of RVCM. In the case of dispersion resins, the cup cannot be used. Weigh the sample in an aluminum dish, transfer the sample to the tared vial, and accurately weigh it in the vial. After prepressurization of the samples, condition them for a minimum of 1 hour in the 90 °C (190 °F) bath. Do not exceed 5 hours. Prepressurization is not required if the sample weight, as analyzed, does not exceed 0.2 gram. It is also not required if solution of the prepressurization equation yields an absolute prepressurization value that is within 30 percent of the atmospheric pressure.

Note: Some aluminum vial caps have a center section that must be removed prior to placing into sample tray. If the cap is not removed, the injection needle will be damaged.

11.7.2 Suspension Resin Slurry and Wet Cake Samples. Decant the water from a wet cake sample, and turn the sample bottle upside down onto a paper towel. Wait for the water to drain, place approximately 0.2 to 4.0 grams of the wet cake sample in a tared vial (tared, including septum and aluminum cap) and seal immediately. Then determine the sample weight (1 percent). All samples weighing over 0.2 gram, must be prepressurized prior to conditioning for 1 hour at 90 °C (190 °F), except as noted in Section 11.7.1. A sample of wet cake is used to determine total solids (TS). This is required for calculating the RVCM.

11.7.3 Dispersion Resin Slurry and Geon Latex Samples. The materials should not be filtered. Sample must be thoroughly mixed. Using a tared vial (tared, including septum and aluminum cap) add approximately eight drops (0.25 to 0.35 g) of slurry or latex using a medicine dropper. This should be done immediately after mixing. Seal the vial as soon as possible. Determine sample weight (1 percent). Condition the vial for 1 hour at 90 °C (190 °F) in the analyzer bath. Determine the TS on the slurry sample (Section 11.10).

11.7.4 In-process Wastewater Samples. Using a tared vial (tared, including septum and aluminum cap) quickly add approximately 1 cc of water using a medicine dropper. Seal the vial as soon as possible. Determine sample weight (1 percent). Condition the vial for 1 hour at 90 °C (190 °F) in the analyzer bath.

11.8 Preparation of Sample Turntable.

11.8.1 Before placing any sample into turntable, be certain that the center section of the aluminum cap has been removed. The numbered sample vials should be placed in the corresponding numbered positions in the turntable. Insert samples in the following order:

11.8.1.1 Positions 1 and 2. Old 2000-ppm standards for conditioning. These are necessary only after the analyzer has not been used for 24 hours or longer.

11.8.1.2 Position 3. 50-ppm standard, freshly prepared.

11.8.1.3 Position 4. 500-ppm standard, freshly prepared.

11.8.1.4 Position 5. 2000-ppm standard, freshly prepared.

11.8.1.5 Position 6. 4000-ppm standard, freshly prepared.

11.8.1.6 Position 7. Sample No. 7 (This is the first sample of the day, but is given as 7 to be consistent with the turntable and the integrator printout.)

11.8.2 After all samples have been positioned, insert the second set of 50-, 500-, 2000-, and 4000-ppm standards. Samples, including standards, must be conditioned in the bath of 90 °C (190 °F) for a minimum of one hour and a maximum of five hours.

11.9 Start Chromatograph Program. When all samples, including standards, have been conditioned at 90 °C (190 °F) for at least one hour, start the analysis program according to the manufacturer's instructions. These instructions must be carefully followed when starting and stopping a program to prevent damage to the dosing assembly.

11.10 Determination of Total Solids. For wet cake, slurry, resin solution, and PVC latex samples, determine TS for each sample by accurately weighing approximately 3 to 4 grams of sample in an aluminum pan before and after placing in a draft oven (105 to 110 °C (221 to 230 °F)). Samples must be dried to constant weight. After first weighing, return the pan to the oven for a short period of time, and then reweigh to verify complete dryness. The TS are then calculated as the final sample weight divided by initial sample weight.

12.0 Calculations and Data Analysis

12.1 Nomenclature.

A_s= Chromatogram area counts of vinyl chloride for the sample, area counts.

A_s= Chromatogram area counts of vinyl chloride for the sample.

C_c= Concentration of vinyl chloride in the standard sample, ppm.

K_p= Henry's Law Constant for VCM in PVC 90 °C, 6.52×10^{-6}g/g/mm Hg.

K_w= Henry's Law Constant for VCM in water 90 °C, 7×10^{-7}g/g/mm Hg.

M_v= Molecular weight of VCM, 62.5 g/mole.

m = Sample weight, g.

P_a= Ambient atmospheric pressure, mm Hg.

R = Gas constant, (62360^3 ml) (mm Hg)/(mole)(°K).

R_f= Response factor in area counts per ppm VCM.

R_s= Response factor, area counts/ppm.

T_l= Ambient laboratory temperature, °K.

TS = Total solids expressed as a decimal fraction.

T_2= Equilibrium temperature, °K.

V_g= Volume of vapor phase, ml.

$$= V_v - \frac{m(TS)}{1.36} - \frac{m(1-TS)}{0.9653}$$

V_v= Vial volume,^{3} ml.

1.36 = Density of PVC at 90 °C, g/^{3} ml.

0.9653 = Density of water at 90 °C, g/^{3} ml.

12.2 Response Factor. If the calibration curve described in Section 10.3 passes through zero, an average response factor, R_f, may be used to facilitate computation of vinyl chloride sample concentrations.

12.2.1 To compute R_f, first compute a response factor, R_s, for each sample as follows:

$$R_s = \frac{A_s}{C_c} \qquad \text{Eq. 107-2}$$

12.2.2 Sum the individual response factors, and calculate R_f. If the calibration curve does not pass through zero, use the calibration curve to determine each sample concentration.

12.3 Residual Vinyl Chloride Monomer Concentration, (C_{rvc}) or Vinyl Chloride Monomer Concentration. Calculate C_{rvc}in ppm or mg/kg as follows:

$$C_{rvc} = \frac{A_s P_a}{R_f T_1}\left[\frac{M_v V_g}{Rm} + K_p(TS)T_2 K_w(1-TS)T_2\right] \qquad \text{Eq. 107-3}$$

Note: Results calculated using these equations represent concentration based on the total sample. To obtain results based on dry PVC content, divide by TS.

13.0 Method Performance

13.1 Range and Sensitivity. The lower limit of detection of vinyl chloride will vary according to the sampling and chromatographic system. The system should be capable of producing a measurement for a 50-ppm vinyl chloride standard that is at least 10 times the standard deviation of the system background noise level.

13.2 An interlaboratory comparison between seven laboratories of three resin samples, each split into three parts, yielded a standard deviation of 2.63 percent for a sample with a mean of 2.09 ppm, 4.16 percent for a sample with a mean of 1.66 ppm, and 5.29 percent for a sample with a mean of 62.66 ppm.

14.0 Pollution Prevention[Reserved]

15.0 Waste Management[Reserved]

16.0 References

1. B.F. Goodrich, Residual Vinyl Chloride Monomer Content of Polyvinyl Chloride Resins, Latex, Wet Cake, Slurry and Water Samples. B.F. Goodrich Chemical Group Standard Test Procedure No. 1005-E. B.F. Goodrich Technical Center, Avon Lake, Ohio. October 8, 1979.

2. Berens, A.R. The Diffusion of Vinyl Chloride in Polyvinyl Chloride. ACS-Division of Polymer Chemistry, Polymer Preprints 15 (2):197. 1974.

3. Berens, A.R. The Diffusion of Vinyl Chloride in Polyvinyl Chloride. ACS-Division of Polymer Chemistry, Polymer Preprints 15 (2):203. 1974.

4. Berens, A.R., *et. al.* Analysis for Vinyl Chloride in PVC Powders by Head-Space Gas Chromatography. Journal of Applied Polymer Science. 19:3169–3172. 1975.

5. Mansfield, R.A. The Evaluation of Henry's Law Constant (Kp) and Water Enhancement in the Perkin-Elmer Multifract F–40 Gas Chromatograph. B.F. Goodrich. Avon Lake, Ohio. February 10, 1978.

17.0 Tables, Diagrams, Flowcharts, and Validation Data[Reserved]

Method 107A—Determination of Vinyl Chloride Content of Solvents, Resin-Solvent Solution, Polyvinyl Chloride Resin, Resin Slurry, Wet Resin, and Latex Samples

Introduction

Performance of this method should not be attempted by persons unfamiliar with the operation of a gas chromatograph (GC) or by those who are unfamiliar with source sampling because knowledge beyond the scope of this presentation is required. Care must be exercised to prevent exposure of sampling personnel to vinyl chloride, a carcinogen.

1. *Applicability and Principle*

1.1 Applicability. This is an alternative method and applies to the measurement of the vinyl chloride content of solvents, resin solvent solutions, polyvinyl chloride (PVC) resin, wet cake slurries, latex, and fabricated resin samples. This method is not acceptable where methods from Section 304(h) of the Clean Water Act, 33 U.S.C. 1251 et seq., (the Federal Water Pollution Control Act Amendments of 1972 as amended by the Clean Water Act of 1977) are required.

1.2 Principle. The basis for this method lies in the direct injection of a liquid sample into a chromatograph and the subsequent evaporation of all volatile material into the carrier gas stream of the chromatograph, thus permitting analysis of all volatile material including vinyl chloride.

2. *Range and Sensitivity*

The lower limit of detection of vinyl chloride in dry PVC resin is 0.2 ppm. For resin solutions, latexes, and wet resin, this limit rises inversely as the nonvolatile (resin) content decreases.

With proper calibration, the upper limit may be extended as needed.

3. *Interferences*

The chromatograph columns and the corresponding operating parameters herein described normally provide an adequate resolution of vinyl chloride. In cases where resolution interferences are encountered, the chromatograph operator shall select the column and operating parameters best suited to his particular analysis problem, subject to the approval of the Administrator.

Approval is automatic, provided that the tester produces confirming data through an adequate supplemental analytical technique, such as analysis with a different column or GC/mass spectroscopy, and has the data available for review by the Administrator.

4. *Precision and Reproducibility*

A standard sample of latex containing 181.8 ppm vinyl chloride analyzed 10 times by the alternative method showed a standard deviation of 7.5 percent and a mean error of 0.21 percent.

A sample of vinyl chloride copolymer resin solution was analyzed 10 times by the alternative method and showed a standard deviation of 6.6 percent at a level of 35 ppm.

5. *Safety*

Do not release vinyl chloride to the laboratory atmosphere during preparation of standards. Venting or purging with vinyl chloride monomer (VCM) air mixtures must be held to minimum. When purging is required, the vapor must be routed to outside air. Vinyl chloride, even at low-ppm levels, must never be vented inside the laboratory.

6. *Apparatus*

6.1 Sampling. The following equipment is required:

6.1.1 Glass Bottles. 16-oz wide mouth wide polyethylene-lined, screw-on tops.

6.1.2 Adhesive Tape. To prevent loosening of bottle tops.

6.2 Sample Recovery. The following equipment is required:

6.2.1 Glass Vials. 20-ml capacity with polycone screw caps.

6.2.2 Analytical Balance. Capable of weighing to ±0.01 gram.

6.2.3 Syringe. 50-microliter size, with removable needle.

6.2.4 Fritted Glass Sparger. Fine porosity.

6.2.5 Aluminum Weighing Dishes.

6.2.6 Sample Roller or Shaker. To help dissolve sample.

6.3 Analysis. The following equipment is required:

6.3.1 Gas Chromatograph. Hewlett Packard Model 5720A or equivalent.

6.3.2 Chromatograph Column. Stainless steel, 6.1 m by 3.2 mm, packed with 20 percent Tergitol E–35 on Chromosorb W AW 60/80 mesh. The analyst may use other columns provided that the precision and accuracy of the analysis of vinyl chloride standards are not impaired and that he has available for review information confirming that there is adequate resolution of the vinyl chloride peak. (Adequate resolution is defined as an area overlap of not more than 10 percent of the vinyl chloride peak by an interfering peak. Calculation of area overlap is explained in Apendix C, Procedure 1: “Determination of Adequate Chromatographic Peak Resolution.”)

6.3.3 Valco Instrument Six-Port Rotary Valve. For column back flush.

6.3.4 Septa. For chromatograph injection port.

6.3.5 Injection Port Liners. For chromatograph used.

6.3.6 Regulators. For required gas cylinders.

6.3.7 Soap Film Flowmeter. Hewlett Packard No. 0101-0113 or equivalent.

6.4 Calibration. The following equipment is required:

6.4.1 Analytical Balance. Capable of weighing to ±0.0001 g.

6.4.2 Erlenmeyer Flask With Glass Stopper. 125 ml.

6.4.3 Pipets. 0.1, 0.5, 1, 5, 10, and 50 ml.

6.4.4 Volumetric Flasks. 10 and 100 ml.

7. *Reagents*

Use only reagents that are of chromatograph grade.

7.1 Analysis. The following items are required:

7.1.1 Hydrogen Gas. Zero grade.

7.1.2 Nitrogen Gas. Zero grade.

7.1.3 Air. Zero grade.

7.1.4 Tetrahydrofuran (THF). Reagent grade.

Analyze the THF by injecting 10 microliters into the prepared gas chromatograph. Compare the THF chromatogram with that shown in Figure 107A–1. If the chromatogram is comparable to A, the THF should be sparged with pure nitrogen for approximately 2 hours using the fritted glass sparger to attempt to remove the interfering peak. Reanalyze the sparged THF to determine whether the THF is acceptable for use. If the scan is comparable to B, the THF should be acceptable for use in the analysis.

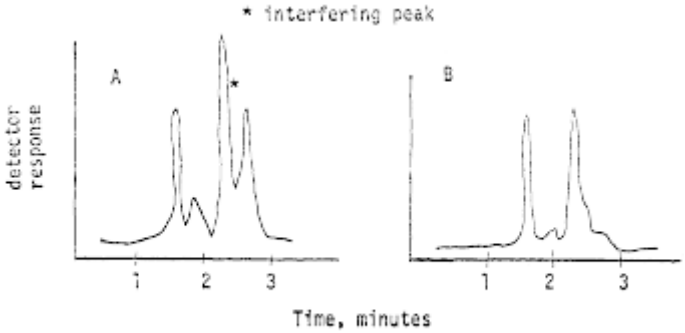

Figure 107A-1

7.1.5 N, N-Dimethylacetamide (DMAC). Spectrographic grade. For use in place of THF.

7.2 Calibration. The following item is required:

7.2.1 Vinyl Chloride 99.9 Percent. Ideal Gas Products lecture bottle, or equivalent. For preparation of standard solutions.

8. *Procedure*

8.1 Sampling. Allow the liquid or dried resin to flow from a tap on the tank, silo, or pipeline until

the tap has been purged. Fill a wide-mouth pint bottle, and immediately tightly cap the bottle. Place an identifying label on each bottle and record the date, time, sample location, and material.

8.2 Sample Treatment. Sample must be run within 24 hours.

8.2.1 Resin Samples. Weigh 9.00 ±0.01 g of THF or DMAC in a tared 20-ml vial. Add 1.00 ±0.01 g of resin to the tared vial containing the THF or DMAC. Close the vial tightly with the screw cap, and shake or otherwise agitate the vial until complete solution of the resin is obtained. Shaking may require several minutes to several hours, depending on the nature of the resin.

8.2.2 Suspension Resin Slurry and Wet Resin Sample. Slurry must be filtered using a small Buchner funnel with vacuum to yield a wet resin sample. The filtering process must be continued only as long as a steady stream of water is exiting from the funnel. Excessive filtration time could result in some loss of VCM. The wet resin sample is weighed into a tared 20-ml vial with THF or DMAC as described earlier for resin samples (8.2.1) and treated the same as the resin sample. A sample of the wet resin is used to determine total solids as required for calculating the residual VCM (Section 8.3.4).

8.2.3 Latex and Resin Solvent Solutions. Samples must be thoroughly mixed. Weigh 1.00 ±0.01 g of the latex or resin-solvent solution into a 20-ml vial containing 9.00 ±0.01 g of THF or DMAC as for the resin samples (8.2.1). Cap and shake until complete solution is obtained. Determine the total solids of the latex or resin solution sample (Section 8.3.4).

8.2.4 Solvents and Non-viscous Liquid Samples. No preparation of these samples is required. The neat samples are injected directly into the GC.

8.3 Analysis.

8.3.1 Preparation of GC. Install the chromatographic column, and condition overnight at 70 °C. Do not connect the exit end of the column to the detector while conditioning.

8.3.1.1 Flow Rate Adjustments. Adjust the flow rate as follows:

a. Nitrogen Carrier Gas. Set regulator on cylinder to read 60 psig. Set column flow controller on the chromatograph using the soap film flowmeter to yield a flow rate of 40 cc/min.

b. Burner Air Supply. Set regulator on the cylinder at 40 psig. Set regulator on the chromatograph to supply air to the burner to yield a flow rate of 250 to 300 cc/min using the flowmeter.

c. Hydrogen. Set regulator on cylinder to read 60 psig. Set regulator on the chromatograph to supply 30 to 40 cc/min using the flowmeter. Optimize hydrogen flow to yield the most sensitive detector response without extinguishing the flame. Check flow with flowmeter and record this flow.

d. Nitrogen Back Flush Gas. Set regulator on the chromatograph using the soap film flowmeter to yield a flow rate of 40 cc/min.

8.3.1.2 Temperature Adjustments. Set temperature as follows:

a. Oven (chromatographic column) at 70 °C.

b. Injection Port at 100 °C.

c. Detector at 300 °C.

8.3.1.3 Ignition of Flame Ionization Detector. Ignite the detector according to the manufacturer's instructions. Allow system to stabilize approximately 1 hour.

8.3.1.4 Recorder. Set pen at zero and start chart drive.

8.3.1.5 Attenuation. Set attenuation to yield desired peak height depending on sample VCM content.

8.3.2 Chromatographic Analyses.

a. Sample Injection. Remove needle from 50-microliter syringe. Open sample vial and draw 50-microliters of THF or DMAC sample recovery solution into the syringe. Recap sample vial. Attach needle to the syringe and while holding the syringe vertically (needle uppermost), eject 40 microliters into an absorbent tissue. Wipe needle with tissue. Now inject 10 microliters into chromatograph system. Repeat the injection until two consecutive values for the height of the vinyl chloride peak do not vary more than 5 percent. Use the average value for these two peak heights to compute the sample concentration.

b. Back Flush. After 4 minutes has elapsed after sample injection, actuate the back flush valve to purge the first 4 feet of the chromatographic column of solvent and other high boilers.

c. Sample Data. Record on the chromatograph strip chart the data from the sample label.

d. Elution Time. Vinyl chloride elutes at 2.8 minutes. Acetaldehyde elutes at 3.7 minutes. Analysis is considered complete when chart pen becomes stable. After 5 minutes, reset back flush valve and inject next sample.

8.3.3 Chromatograph Servicing.

a. Septum. Replace after five sample injections.

b. Sample Port Liner. Replace the sample port liner with a clean spare after five sample injections.

c. Chromatograph Shutdown. If the chromatograph has been shut down overnight, rerun one or more samples from the preceding day to test stability and precision prior to starting on the current day's work.

8.3.4 Determination of Total Solids (TS). For wet resin, resin solution, and PVC latex samples, determine the TS for each sample by accurately weighing approximately 3 to 5 grams of sample into a tared aluminum pan. The initial procedure is as follows:

a. Where water is the major volatile component: Tare the weighing dish, and add 3 to 5 grams of sample to the dish. Weigh to the nearest milligram.

b. Where volatile solvent is the major volatile component: Transfer a portion of the sample to a 20-ml screw cap vial and cap immediately. Weigh the vial to the nearest milligram. Uncap the vial and transfer a 3- to 5-gram portion of the sample to a tared aluminum weighing dish. Recap the vial and reweigh to the nearest milligram. The vial weight loss is the sample weight.

To continue, place the weighing pan in a 130 °C oven for 1 hour. Remove the dish and allow to cool to room temperature in a desiccator. Weigh the pan to the nearest 0.1 mg. Total solids is the weight of material in the aluminum pan after heating divided by the net weight of sample added to the pan originally times 100.

9. *Calibration of the Chromatograph*

9.1 Preparation of Standards. Prepare a 1 percent by weight (approximate) solution of vinyl chloride in THF or DMAC by bubbling vinyl chloride gas from a cylinder into a tared 125-ml glass-stoppered flask containing THF or DMAC. The weight of vinyl chloride to be added should be calculated prior to this operation, i.e., 1 percent of the weight of THF or DMAC contained in the

tared flask. This must be carried out in a laboratory hood. Adjust the vinyl chloride flow from the cylinder so that the vinyl chloride dissolves essentially completely in the THF or DMAC and is not blown to the atmosphere. Take particular care not to volatize any of the solution. Stopper the flask and swirl the solution to effect complete mixing. Weigh the stoppered flask to nearest 0.1 mg to determine the exact amount of vinyl chloride added.

Pipet 10 ml of the approximately 1 percent solution into a 100-ml glass-stoppered volumetric flask, and add THF or DMAC to fill to the mark. Cap the flask and invert 10 to 20 times. This solution contains approximately 1,000 ppm by weight of vinyl chloride (note the exact concentration).

Pipet 50-, 10-, 5-, 1-, 0.5-, and 0.1-ml aliquots of the approximately 1,000 ppm solution into 10 ml glass stoppered volumetric flasks. Dilute to the mark with THF or DMAC, cap the flasks and invert each 10 to 20 times. These solutions contain approximately 500, 100, 50, 10, 5, and 1 ppm vinyl chloride. Note the exact concentration of each one. These standards are to be kept under refrigeration in stoppered bottles, and must be renewed every 3 months.

9.2 Preparation of Chromatograph Calibration Curve.

Obtain the GC for each of the six final solutions prepared in Section 9.1 by using the procedure in Section 8.3.2. Prepare a chart plotting peak height obtained from the chromatogram of each solution versus the known concentration. Draw a straight line through the points derived by the least squares method.

10. *Calculations*

10.1 Response Factor. From the calibration curve described in Section 9.2, select the value of $C_c$that corresponds to $H_c$for each sample. Compute the response factor, R_f, for each sample as follows:

$$R_f = \frac{C_c}{H_c} \qquad \text{Eq. 107A-1}$$

where:

R_f=Chromatograph response factor, ppm/mm.

C_c=Concentration of vinyl chloride in the standard sample, ppm.

H_c=Peak height of the standard sample, mm.

10.2 Residual vinyl chloride monomer concentration (C_{rvc}) or vinyl chloride monomer concentration in resin:

$$C_{rvc} = 10 H_s R_f \qquad \text{Eq. 107A-2}$$

Where:

C_{rvc}=Concentration of residual vinyl chloride monomer, ppm.

H_s=Peak height of sample, mm.

R_f=Chromatograph response factor.

10.3 Samples containing volatile material, i.e., resin solutions, wet resin, and latexes:

$$C_{rw} = \frac{H_s R_f (1,000)}{TS} \qquad \text{Eq. 107A-3}$$

where:

TS=Total solids in the sample, weight fraction.

10.4 Samples of solvents and in process wastewater:

$$C_{rw} = \frac{H_s R_f}{0.888} \qquad \text{Eq. 107A-4}$$

Where:

0.888=Specific gravity of THF.

11. *Bibliography*

1. Communication from R. N. Wheeler, Jr.; Union Carbide Corporation. Part 61 National Emissions Standards for Hazardous Air Pollutants appendix B, Method 107—Alternate Method, September 19, 1977.

Method 108—Determination of Particulate and Gaseous Arsenic Emissions

Note: This method does not include all of the specifications (*e.g.,* equipment and supplies) and procedures (*e.g.,* sampling and analytical) essential to its performance. Some material is incorporated by reference from other methods in appendix A to 40 CFR part 60. Therefore, to obtain reliable results, persons using this method should have a thorough knowledge of at least the following additional test methods: Method 1, Method 2, Method 3, Method 5, and Method 12.

1.0 Scope and Application.

1.1 Analytes.

Analyte	CAS No.	Sensitivity
Arsenic compounds as arsenic (As)	7440–38–2	Lower limit 10 µg/ml or less.

1.2 Applicability. This method is applicable for the determination of inorganic As emissions from stationary sources as specified in an applicable subpart of the regulations.

1.3 Data Quality Objectives. Adherence to the requirements of this method will enhance the quality of the data obtained from air pollutant sampling methods.

2.0 Summary of Method

Particulate and gaseous As emissions are withdrawn isokinetically from the source and are collected on a glass mat filter and in water. The collected arsenic is then analyzed by means of atomic absorption spectrophotometry (AAS).

3.0 Definitions.[Reserved]

4.0 Interferences

Analysis for As by flame AAS is sensitive to the chemical composition and to the physical

properties (*e.g.,* viscosity, pH) of the sample. The analytical procedure includes a check for matrix effects (Section 11.5).

5.0 Safety

5.1 This method may involve hazardous materials, operations, and equipment. This test method may not address all of the safety problems associated with its use. It is the responsibility of the user to establish appropriate safety and health practices and determine the applicability of regulatory limitations prior to performing this test method.

5.2 Corrosive reagents. The following reagents are hazardous. Personal protective equipment and safe procedures that prevent chemical splashes are recommended. If contact occurs, immediately flush with copious amounts of water for at least 15 minutes. Remove clothing under shower and decontaminate. Treat residual chemical burns as thermal burns.

5.2.1 Hydrochloric Acid (HCl). Highly corrosive liquid with toxic vapors. Vapors are highly irritating to eyes, skin, nose, and lungs, causing severe damage. May cause bronchitis, pneumonia, or edema of lungs. Exposure to concentrations of 0.13 to 0.2 percent can be lethal to humans in a few minutes. Provide ventilation to limit exposure. Reacts with metals, producing hydrogen gas.

5.2.2 Hydrogen Peroxide (H_2O_2). Very harmful to eyes. 30% H_2O_2can burn skin, nose, and lungs.

5.2.3 Nitric Acid (HNO_3). Highly corrosive to eyes, skin, nose, and lungs. Vapors are highly toxic and can cause bronchitis, pneumonia, or edema of lungs. Reaction to inhalation may be delayed as long as 30 hours and still be fatal. Provide ventilation to limit exposure. Strong oxidizer. Hazardous reaction may occur with organic materials such as solvents.

5.2.4 Sodium Hydroxide (NaOH). Causes severe damage to eyes and skin. Inhalation causes irritation to nose, throat, and lungs. Reacts exothermically with small amounts of water.

6.0 Equipment and Supplies

6.1 Sample Collection. A schematic of the sampling train used in performing this method is shown in Figure 108–1; it is similar to the Method 5 sampling train of 40 CFR part 60, appendix A. The following items are required for sample collection:

6.1.1 Probe Nozzle, Probe Liner, Pitot Tube, Differential Pressure Gauge, Filter Holder, Filter Heating System, Temperature Sensor, Metering System, Barometer, and Gas Density Determination Equipment. Same as Method 5, Sections 6.1.1.1 to 6.1.1.7, 6.1.1.9, 6.1.2, and 6.1.3, respectively.

6.1.2 Impingers. Four impingers connected in series with leak-free ground-glass fittings or any similar leak-free noncontaminating fittings. For the first, third, and fourth impingers, use the Greenburg-Smith design, modified by replacing the tip with a 1.3-cm ID (0.5-in.) glass tube extending to about 1.3 cm (0.5 in.) from the bottom of the flask. For the second impinger, use the Greenburg-Smith design with the standard tip. Modifications (*e.g.,* flexible connections between the impingers, materials other than glass, or flexible vacuum lines to connect the filter holder to the condenser) are subject to the approval of the Administrator.

6.1.3 Temperature Sensor. Place a temperature sensor, capable of measuring temperature to within 1 °C (2 °F), at the outlet of the fourth impinger for monitoring purposes.

6.2 Sample Recovery. The following items are required for sample recovery:

6.2.1 Probe-Liner and Probe-Nozzle Brushes, Petri Dishes, Graduated Cylinder and/or Balance, Plastic Storage Containers, and Funnel and Rubber Policeman. Same as Method 5, Sections

6.2.1 and 6.2.4 to 6.2.8, respectively.

6.2.2 Wash Bottles. Polyethylene (2).

6.2.3 Sample Storage Containers. Chemically resistant, polyethylene or polypropylene for glassware washes, 500- or 1000-ml.

6.3 Analysis. The following items are required for analysis:

6.3.1 Spectrophotometer. Equipped with an electrodeless discharge lamp and a background corrector to measure absorbance at 193.7 nanometers (nm). For measuring samples having less than 10 µg As/ml, use a vapor generator accessory or a graphite furnace.

6.3.2 Recorder. To match the output of the spectrophotometer.

6.3.3 Beakers. 150 ml.

6.3.4 Volumetric Flasks. Glass 50-, 100-, 200-, 500-, and 1000-ml; and polypropylene, 50-ml.

6.3.5 Balance. To measure within 0.5 g.

6.3.6 Volumetric Pipets. 1-, 2-, 3-, 5-, 8-, and 10-ml.

6.3.7 Oven.

6.3.8 Hot Plate.

7.0 Reagents and Standards

Unless otherwise indicated, it is intended that all reagents conform to the specifications established by the Committee on Analytical Reagents of the American Chemical Society, where such specifications are available; otherwise, use the best available grade.

7.1 The following reagents are required for sample collection:

7.1.1 Filters. Same as Method 5, Section 7.1.1, except that the filters need not be unreactive to SO_2.

7.1.2 Silica Gel, Crushed Ice, and Stopcock Grease. Same as Method 5, Sections 7.1.2, 7.1.4, and 7.1.5, respectively.

7.1.3 Water. Deionized distilled to meet ASTM D 1193–77 or 91 (incorporated by reference-see §61.18), Type 3. When high concentrations of organic matter are not expected to be present, the $KMnO_4$test for oxidizable organic matter may be omitted.

7.2 Sample Recovery.

7.2.1 0.1 N NaOH. Dissolve 4.00 g of NaOH in about 500 ml of water in a 1-liter volumetric flask. Then, dilute to exactly 1.0 liter with water.

7.3 Analysis. The following reagents and standards are required for analysis:

7.3.1 Water. Same as Section 7.1.3.

7.3.2 Sodium Hydroxide, 0.1 N. Same as in Section 7.2.1.

7.3.3 Sodium Borohydride ($NaBH_4$), 5 Percent Weight by Volume (W/V). Dissolve 50.0 g of $NaBH_4$in about 500 ml of 0.1 N NaOH in a 1-liter volumetric flask. Then, dilute to exactly 1.0 liter with 0.1 N NaOH.

7.3.4 Hydrochloric Acid, Concentrated.

7.3.5 Potassium Iodide (KI), 30 Percent (W/V). Dissolve 300 g of KI in 500 ml of water in a 1 liter volumetric flask. Then, dilute to exactly 1.0 liter with water.

7.3.6 Nitric Acid, Concentrated.

7.3.7 Nitric Acid, 0.8 N. Dilute 52 ml of concentrated $HNO_3$to exactly 1.0 liter with water.

7.3.8 Nitric Acid, 50 Percent by Volume (V/V). Add 50 ml concentrated $HNO_3$to 50 ml water.

7.3.9 Stock Arsenic Standard, 1 mg As/ml. Dissolve 1.3203 g of primary standard grade As_2O_3in 20 ml of 0.1 N NaOH in a 150 ml beaker. Slowly add 30 ml of concentrated HNO_3. Heat the resulting solution and evaporate just to dryness. Transfer the residue quantitatively to a 1-liter volumetric flask, and dilute to 1.0 liter with water.

7.3.10 Arsenic Working Solution, 1.0 µg As/ml. Pipet exactly 1.0 ml of stock arsenic standard into an acid-cleaned, appropriately labeled 1-liter volumetric flask containing about 500 ml of water and 5 ml of concentrated HNO_3. Dilute to exactly 1.0 liter with water.

7.3.11 Air. Suitable quality for AAS analysis.

7.3.12 Acetylene. Suitable quality for AAS analysis.

7.3.13 Nickel Nitrate, 5 Percent Ni (W/V). Dissolve 24.780 g of nickel nitrate hexahydrate [$Ni(NO_3)_2 6H_2O$] in water in a 100-ml volumetric flask, and dilute to 100 ml with water.

7.3.14 Nickel Nitrate, 1 Percent Ni (W/V). Pipet 20 ml of 5 percent nickel nitrate solution into a 100-ml volumetric flask, and dilute to exactly 100 ml with water.

7.3.15 Hydrogen Peroxide, 3 Percent by Volume. Pipet 50 ml of 30 percent H_2O_2into a 500-ml volumetric flask, and dilute to exactly 500 ml with water.

7.3.16 Quality Assurance Audit Samples. When making compliance determinations, and upon availability, audit samples may be obtained from the appropriate EPA regional Office or from the responsible enforcement authority.

Note: The responsible enforcement authority should be notified at least 30 days prior to the test date to allow sufficient time for sample delivery.

8.0 Sample Collection, Preservation, Transport, and Storage

8.1 Pretest Preparation. Follow the general procedure given in Method 5, Section 8.1, except the filter need not be weighed, and the 200 ml of 0.1N NaOH and Container 4 should be tared to within 0.5 g.

8.2 Preliminary Determinations. Follow the general procedure given in Method 5, Section 8.2, except select the nozzle size to maintain isokinetic sampling rates below 28 liters/min (1.0 cfm).

8.3 Preparation of Sampling Train. Follow the general procedure given in Method 5, Section 8.3.

8.4 Leak-Check Procedures. Same as Method 5, Section 8.4.

8.5 Sampling Train Operation. Follow the general procedure given in Method 5, Section 8.5, except maintain isokinetic sampling flow rates below 28 liters/min (1.0 cfm). For each run, record the data required on a data sheet similar to the one shown in Figure 108–2.

8.6 Calculation of Percent Isokinetic. Same as Method 5, Section 8.6.

8.7 Sample Recovery. Same as Method 5, Section 8.7, except that 0.1 N NaOH is used as the cleanup solvent instead of acetone and that the impinger water is treated as follows:

8.7.1 Container Number 4 (Impinger Water). Clean each of the first three impingers and connecting glassware in the following manner:

8.7.1.1 Wipe the impinger ball joints free of silicone grease, and cap the joints.

8.7.1.2 Rotate and agitate each of the first two impingers, using the impinger contents as a rinse solution.

8.7.1.3 Transfer the liquid from the first three impingers to Container Number 4. Remove the outlet ball-joint cap, and drain the contents through this opening. Do not separate the impinger parts (inner and outer tubes) while transferring their contents to the container.

8.7.1.4 Weigh the contents of Container No. 4 to within 0.5 g. Record in the log the weight of liquid along with a notation of any color or film observed in the impinger catch. The weight of liquid is needed along with the silica gel data to calculate the stack gas moisture content.

Note: Measure and record the total amount of 0.1 N NaOH used for rinsing under Sections 8.7.1.5 and 8.7.1.6.

8.7.1.5 Pour approximately 30 ml of 0.1 NaOH into each of the first two impingers, and agitate the impingers. Drain the 0.1 N NaOH through the outlet arm of each impinger into Container Number 4. Repeat this operation a second time; inspect the impingers for any abnormal conditions.

8.7.1.6 Wipe the ball joints of the glassware connecting the impingers and the back half of the filter holder free of silicone grease, and rinse each piece of glassware twice with 0.1 N NaOH; transfer this rinse into Container Number 4. (DO NOT RINSE or brush the glass-fritted filter support.) Mark the height of the fluid level to determine whether leakage occurs during transport. Label the container to identify clearly its contents.

8.8 Blanks.

8.8.1 Sodium Hydroxide. Save a portion of the 0.1 N NaOH used for cleanup as a blank. Take 200 ml of this solution directly from the wash bottle being used and place it in a plastic sample container labeled “NaOH blank.”

8.8.2 Water. Save a sample of the water, and place it in a container labeled “H_2O blank.”

8.8.3 Filter. Save two filters from each lot of filters used in sampling. Place these filters in a container labeled “filter blank.”

9.0 Quality Control

9.1 Miscellaneous Quality Control Measures.

Section	Quality control measure	Effect
8.4, 10.1	Sampling equipment leak-checks and calibration	Ensures accuracy and precision of sampling measurements.
10.4	Spectrophotometer calibration	Ensures linearity of spectrophotometer

		response to standards.
11.5	Check for matrix effects	Eliminates matrix effects.
11.6	Audit sample analysis	Evaluates analyst's technique and standards preparation.

9.2 Volume Metering System Checks. Same as Method 5, Section 9.2.

10.0 Calibration and Standardization

Note: Maintain a laboratory log of all calibrations.

10.1 Sampling Equipment. Same as Method 5, Section 10.0.

10.2 Preparation of Standard Solutions.

10.2.1 For the high level procedure, pipet 1, 3, 5, 8, and 10 ml of the 1.0 mg As/ml stock solution into separate 100 ml volumetric flasks, each containing 5 ml of concentrated HNO_3. Dilute to the mark with water.

10.2.2 For the low level vapor generator procedure, pipet 1, 2, 3, and 5 ml of 1.0 µg As/ml standard solution into separate reaction tubes. Dilute to the mark with water.

10.2.3 For the low level graphite furnace procedure, pipet 1, 5, 10 and 15 ml of 1.0 µg As/ml standard solution into separate flasks along with 2 ml of the 5 percent nickel nitrate solution and 10 ml of the 3 percent H_2O_2solution. Dilute to the mark with water.

10.3 Calibration Curve. Analyze a 0.8 N HNO_3blank and each standard solution according to the procedures outlined in section 11.4.1. Repeat this procedure on each standard solution until two consecutive peaks agree within 3 percent of their average value. Subtract the average peak height (or peak area) of the blank—which must be less than 2 percent of recorder full scale—from the averaged peak height of each standard solution. If the blank absorbance is greater than 2 percent of full-scale, the probable cause is As contamination of a reagent or carry-over of As from a previous sample. Prepare the calibration curve by plotting the corrected peak height of each standard solution versus the corresponding final total As weight in the solution.

10.4 Spectrophotometer Calibration Quality Control. Calculate the least squares slope of the calibration curve. The line must pass through the origin or through a point no further from the origin than ±2 percent of the recorder full scale. Multiply the corrected peak height by the reciprocal of the least squares slope to determine the distance each calibration point lies from the theoretical calibration line. The difference between the calculated concentration values and the actual concentrations (*e.g.,* 1, 3, 5, 8, and 10 mg As for the high-level procedure) must be less than 7 percent for all standards.

Note: For instruments equipped with direct concentration readout devices, preparation of a standard curve will not be necessary. In all cases, follow calibration and operational procedures in the manufacturers' instruction manual.

11.0 Analytical Procedure

11.1 Sample Loss Check. Prior to analysis, check the liquid level in Containers Number 2 and Number 4. Note on the analytical data sheet whether leakage occurred during transport. If a noticeable amount of leakage occurred, either void the sample or take steps, subject to the approval of the Administrator, to adjust the final results.

11.2 Sample Preparation.

11.2.1 Container Number 1 (Filter). Place the filter and loose particulate matter in a 150 ml beaker. Also, add the filtered solid material from Container Number 2 (see Section 11.2.2). Add 50 ml of 0.1 N NaOH. Then stir and warm on a hot plate at low heat (do not boil) for about 15 minutes. Add 10 ml of concentrated HNO_3, bring to a boil, then simmer for about 15 minutes. Filter the solution through a glass fiber filter. Wash with hot water, and catch the filtrate in a clean 150 ml beaker. Boil the filtrate, and evaporate to dryness. Cool, add 5 ml of 50 percent HNO_3, and then warm and stir. Allow to cool. Transfer to a 50-ml volumetric flask, dilute to volume with water, and mix well.

11.2.2 Container Number 2 (Probe Wash).

11.2.2.1 Filter (using a glass fiber filter) the contents of Container Number 2 into a 200 ml volumetric flask. Combine the filtered (solid) material with the contents of Container Number 1 (Filter).

11.2.2.2 Dilute the filtrate to exactly 200 ml with water. Then pipet 50 ml into a 150 ml beaker. Add 10 ml of concentrated HNO_3, bring to a boil, and evaporate to dryness. Allow to cool, add 5 ml of 50 percent HNO_3, and then warm and stir. Allow the solution to cool, transfer to a 50-ml volumetric flask, dilute to volume with water, and mix well.

11.2.3 Container Number 4 (Impinger Solution). Transfer the contents of Container Number 4 to a 500 ml volumetric flask, and dilute to exactly 500-ml with water. Pipet 50 ml of the solution into a 150-ml beaker. Add 10 ml of concentrated HNO_3, bring to a boil, and evaporate to dryness. Allow to cool, add 5 ml of 50 percent HNO_3, and then warm and stir. Allow the solution to cool, transfer to a 50-ml volumetric flask, dilute to volume with water, and mix well.

11.2.4 Filter Blank. Cut each filter into strips, and treat each filter individually as directed in Section 11.2.1, beginning with the sentence, “Add 50 ml of 0.1 N NaOH.”

11.2.5 Sodium Hydroxide and Water Blanks. Treat separately 50 ml of 0.1 N NaOH and 50 ml water, as directed under Section 11.2.3, beginning with the sentence, “Pipet 50 ml of the solution into a 150-ml beaker.”

11.3 Spectrophotometer Preparation. Turn on the power; set the wavelength, slit width, and lamp current. Adjust the background corrector as instructed by the manufacturer's manual for the particular atomic absorption spectrophotometer. Adjust the burner and flame characteristics as necessary.

11.4 Analysis. Calibrate the analytical equipment and develop a calibration curve as outlined in Sections 10.2 through 10.4.

11.4.1 Arsenic Samples. Analyze an appropriately sized aliquot of each diluted sample (from Sections 11.2.1 through 11.2.3) until two consecutive peak heights agree within 3 percent of their average value. If applicable, follow the procedures outlined in Section 11.4.1.1. If the sample concentration falls outside the range of the calibration curve, make an appropriate dilution with 0.8 N HNO_3so that the final concentration falls within the range of the curve. Using the calibration curve, determine the arsenic concentration in each sample fraction.

Note: Because instruments vary between manufacturers, no detailed operating instructions will be given here. Instead, the instrument manufacturer's detailed operating instructions should be followed.

11.4.1.1 Arsenic Determination at Low Concentration. The lower limit of flame AAS is 10 µg As/ml. If the arsenic concentration of any sample is at a lower level, use the graphite furnace or vapor generator which is available as an accessory component. Flame, graphite furnace, or vapor

generators may be used for samples whose concentrations are between 10 and 30 µg/ml. Follow the manufacturer's instructions in the use of such equipment.

11.4.1.1.1 Vapor Generator Procedure. Place a sample containing between 0 and 5 µg of arsenic in the reaction tube, and dilute to 15 ml with water. Since there is some trial and error involved in this procedure, it may be necessary to screen the samples by conventional atomic absorption until an approximate concentration is determined. After determining the approximate concentration, adjust the volume of the sample accordingly. Pipet 15 ml of concentrated HCl into each tube. Add 1 ml of 30 percent KI solution. Place the reaction tube into a 50 °C (120 °F) water bath for 5 minutes. Cool to room temperature. Connect the reaction tube to the vapor generator assembly. When the instrument response has returned to baseline, inject 5.0 ml of 5 percent $NaBH_4$, and integrate the resulting spectrophotometer signal over a 30-second time period.

11.4.1.1.2 Graphite Furnace Procedure. Dilute the digested sample so that a 5 ml aliquot contains less than 1.5 µg of arsenic. Pipet 5 ml of this digested solution into a 10-ml volumetric flask. Add 1 ml of the 1 percent nickel nitrate solution, 0.5 ml of 50 percent HNO_3, and 1 ml of the 3 percent hydrogen peroxide and dilute to 10 ml with water. The sample is now ready for analysis.

11.4.1.2 Run a blank (0.8 N HNO_3) and standard at least after every five samples to check the spectrophotometer calibration. The peak height of the blank must pass through a point no further from the origin than ±2 percent of the recorder full scale. The difference between the measured concentration of the standard (the product of the corrected average peak height and the reciprocal of the least squares slope) and the actual concentration of the standard must be less than 7 percent, or recalibration of the analyzer is required.

11.4.1.3 Determine the arsenic concentration in the filter blank (i.e., the average of the two blank values from each lot).

11.4.2 Container Number 3 (Silica Gel). This step may be conducted in the field. Weigh the spent silica gel (or silica gel plus impinger) to the nearest 0.5 g; record this weight.

11.5 Check for matrix effects on the arsenic results. Same as Method 12, Section 11.5.

11.6 Audit Sample Analysis.

11.6.1 When the method is used to analyze samples to demonstrate compliance with a source emission regulation, a set of EPA audit samples must be analyzed, subject to availability.

11.6.2 Concurrently analyze the audit samples and the compliance samples in the same manner to evaluate the technique of the analyst and the standards preparation.

Note: It is recommended that known quality control samples be analyzed prior to the compliance and audit sample analyses to optimize the system accuracy and precision. These quality control samples may be obtained by contacting the appropriate EPA regional Office or the responsible enforcement authority.

11.6.3 The same analyst, analytical reagents, and analytical system shall be used for the compliance samples and the EPA audit samples. If this condition is met, duplicate auditing of subsequent compliance analyses for the same enforcement agency within a 30-day period is waived. An audit sample set may not be used to validate different sets of compliance samples under the jurisdiction of separate enforcement agencies, unless prior arrangements have been made with both enforcement agencies.

11.7 Audit Sample Results.

11.7.1 Calculate the audit sample concentrations in $g/m_3$and submit results using the instructions

provided with the audit samples.

11.7.2 Report the results of the audit samples and the compliance determination samples along with their identification numbers, and the analyst's name to the responsible enforcement authority. Include this information with reports of any subsequent compliance analyses for the same enforcement authority during the 30-day period.

11.7.3 The concentrations of the audit samples obtained by the analyst shall agree within 10 percent of the actual concentrations. If the 10 percent specification is not met, reanalyze the compliance and audit samples, and include initial and reanalysis values in the test report.

11.7.4 Failure to meet the 10 percent specification may require retests until the audit problems are resolved. However, if the audit results do not affect the compliance or noncompliance status of the affected facility, the Administrator may waive the reanalysis requirement, further audits, or retests and accept the results of the compliance test. While steps are being taken to resolve audit analysis problems, the Administrator may also choose to use the data to determine the compliance or noncompliance status of the affected facility.

12.0 Data Analysis and Calculations

12.1 Nomenclature.

B_{ws}= Water in the gas stream, proportion by volume.

C_a= Concentration of arsenic as read from the standard curve, µg/ml.

C_c= Actual audit concentration, g/m^3 .

C_d= Determined audit concentration, g/m^3 .

C_s= Arsenic concentration in stack gas, dry basis, converted to standard conditions, g/dsm^3 (gr/dscf).

E_a= Arsenic mass emission rate, g/hr (lb/hr).

F_d= Dilution factor (equals 1 if the sample has not been diluted).

I = Percent of isokinetic sampling.

m_{bi}= Total mass of all four impingers and contents before sampling, g.

m_{fi}= Total mass of all four impingers and contents after sampling, g.

m_n= Total mass of arsenic collected in a specific part of the sampling train, µg.

m_t= Total mass of arsenic collected in the sampling train, µg.

T_m= Absolute average dry gas meter temperature (see Figure 108–2), °K (°R).

V_m= Volume of gas sample as measured by the dry gas meter, dry basis, m^3 (ft^3).

Vm(std)= Volume of gas sample as measured by the dry gas meter, corrected to standard conditions, m^3 (ft^3).

V_n= Volume of solution in which the arsenic is contained, ml.

Vw(std)= Volume of water vapor collected in the sampling train, corrected to standard conditions, m^3 (ft^3).

ΔH = Average pressure differential across the orifice meter (see Figure 108–2), mm H_2O (in. H_2O).

12.2 Average Dry Gas Meter Temperatures (T_m) and Average Orifice Pressure Drop (ΔH). See data sheet (Figure 108–2).

12.3 Dry Gas Volume. Using data from this test, calculate Vm(std)according to the procedures outlined in Method 5, Section 12.3.

12.4 Volume of Water Vapor.

$$V_{w(std)} = K_2\left(m_{fi} - m_{bi}\right) \qquad \text{Eq. 108-1}$$

Where:

K_2= 0.001334 m^3 /g for metric units.

= 0.047012 ft^3 /g for English units.

12.5 Moisture Content.

$$B_{ws} = \frac{V_{w(std)}}{V_{m(std)} + V_{w(std)}} \qquad \text{Eq. 108-2}$$

12.6 Amount of Arsenic Collected.

12.6.1 Calculate the amount of arsenic collected in each part of the sampling train, as follows:

$$m_n = C_a F_d V_n \qquad \text{Eq. 108-3}$$

12.6.2 Calculate the total amount of arsenic collected in the sampling train as follows:

$$m_t = m_{(\text{filters})} + m_{(\text{probe})} + m_{(\text{impingers})} - m_{(\text{filter blank})} - m_{(\text{NaOH blank})} - m_{(\text{water blank})} \qquad \text{Eq. 108-4}$$

12.7 Calculate the arsenic concentration in the stack gas (dry basis, adjusted to standard conditions) as follows:

$$C_s = K_3\left(m_t / V_{m(std)}\right) \qquad \text{Eq. 108-5}$$

Where:

K_3= 10^{-6}g/μg for metric units

= 1.54 × 10^{-5}gr/μg for English units

12.8 Stack Gas Velocity and Volumetric Flow Rate. Calculate the average stack gas velocity and volumetric flow rate using data obtained in this method and the equations in Sections 12.2 and 12.3 of Method 2.

12.9 Pollutant Mass Rate. Calculate the arsenic mass emission rate as follows:

$$E_a = C_s Q_{sd} \qquad Eq.\ 108\text{-}6$$

12.10 Isokinetic Variation. Same as Method 5, Section 12.11.

13.0 Method Performance

13.1 Sensitivity. The lower limit of flame AAS 10 µg As/ml. The analytical procedure includes provisions for the use of a graphite furnace or vapor generator for samples with a lower arsenic concentration.

14.0 Pollution Prevention.[Reserved]

15.0 Waste Management.[Reserved]

16.0 References.

Same as References 1 through 9 of Method 5, Section 17.0, with the addition of the following:

1. Perkin Elmer Corporation. Analytical Methods for Atomic Absorption Spectrophotometry. 303–0152. Norwalk, Connecticut. September 1976. pp. 5–6.

2. Standard Specification for Reagent Water. In: Annual Book of American Society for Testing and Materials Standards. Part 31: Water, Atmospheric Analysis. American Society for Testing and Materials. Philadelphia, PA. 1974. pp. 40–42.

3. Stack Sampling Safety Manual (Draft). U.S. Environmental Protection Agency, Office of Air Quality Planning and Standard, Research Triangle Park, NC. September 1978.

17.0 Tables, Diagrams, Flowcharts, and Validation Data

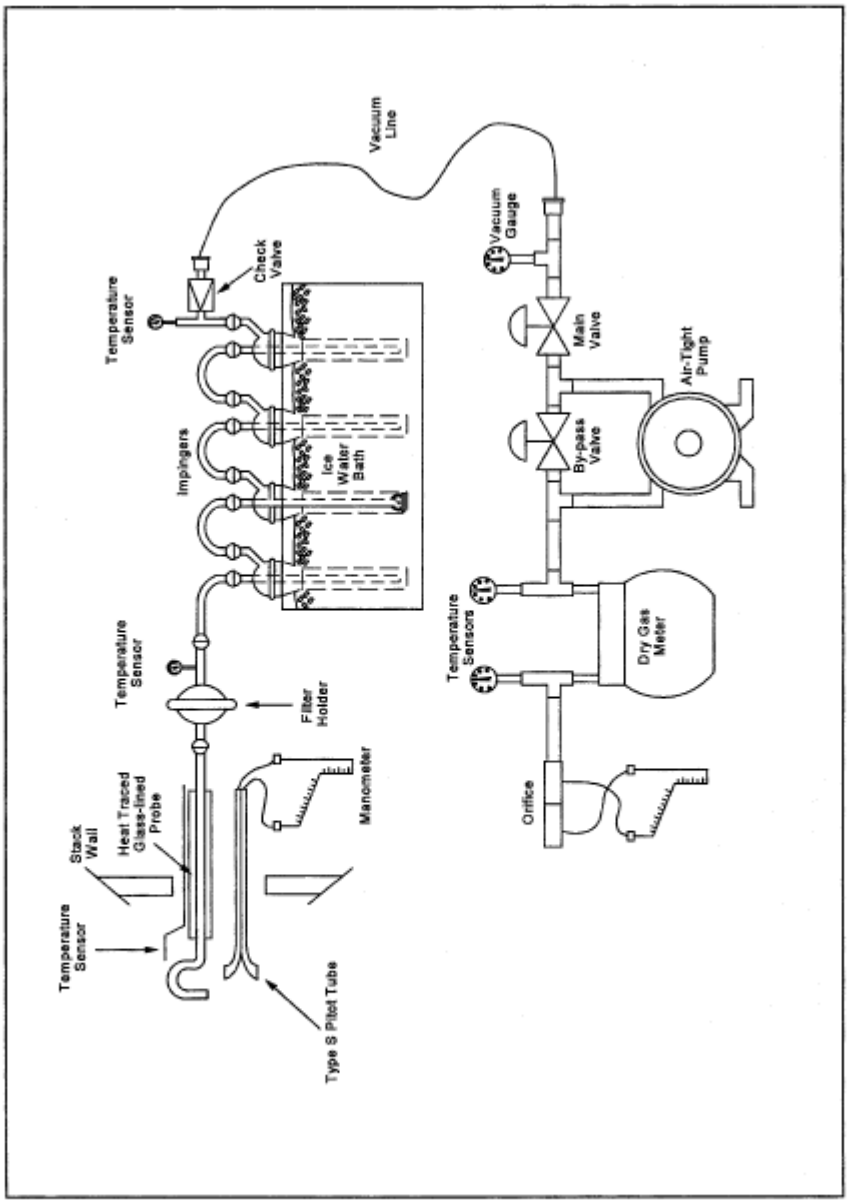

Figure 108-1. Arsenic Sampling Train

Plant _____
Location _____
Operator _____
Date _____
Run No. _____
Sample box No. _____
Meter box No. _____
Meter $\Delta H@$ _____
C factor _____
Pitot tube coefficient, C_p _____

SCHEMATIC OF STACK CROSS SECTION

Ambient temperature _____
Barometric pressure _____
Assumed moisture, % _____
Probe length, (ft.) _____
Nozzle identification No. _____
Average calibrated nozzle diameter, (in.) _____
Probe heater setting _____
Leak rate, (cfm) _____
Probe liner material _____

Traverse point number	Sampling time	Vacuum	Stack temperature	Velocity head	Pressure differential across orifice meter	Gas meter reading	Gas sample temperature at dry gas meter		Filter temperature	Temperature of gas leaving condenser or last impinger
							Inlet	Outlet		
	min.	(in.Hg)	(T_s) (°F)	(ΔP_s) (in. H_2O)	(in. H_2O)	(ft^3)	(°F)	(°F)	(°F)	(°F)
Total							Avg.	Avg.		
Average							Avg.			

Figure 108-2. Arsenic Field Data Sheet.

Method 108A—Determination of Arsenic Content in Ore Samples From Nonferrous Smelters

Note: This method does not include all of the specifications (*e.g.,* equipment and supplies) and procedures (*e.g.,* sampling and analytical) essential to its performance. Some material is incorporated by reference from other methods in appendix A to 40 CFR part 60. Therefore, to obtain reliable results, persons using this method should have a thorough knowledge of Method 12.

1.0 Scope and Application

1.1 Analytes.

Analyte	CAS No.	Sensitivity
Arsenic compounds as arsenic (As)	7440–38–2	Lower limit 10 µg/ml or less.

1.2 Applicability. This method applies to the determination of inorganic As content of process ore and reverberatory matte samples from nonferrous smelters and other sources as specified in an applicable subpart of the regulations.

1.3 Data Quality Objectives. Adherence to the requirements of this method will enhance the quality of the data obtained from air pollutant sampling methods.

2.0 Summary of Method

Arsenic bound in ore samples is liberated by acid digestion and analyzed by flame atomic absorption spectrophotometry (AAS).

3.0 Definitions[Reserved]

4.0 Interferences

Analysis for As by flame AAS is sensitive to the chemical composition and to the physical properties (*e.g.,* viscosity, pH) of the sample. The analytical procedure includes a check for matrix effects (section 11.5).

5.0 Safety

5.1 Disclaimer. This method may involve hazardous materials, operations, and equipment. This test method may not address all of the safety problems associated with its use. It is the responsibility of the user to establish appropriate safety and health practices and determine the applicability of regulatory limitations prior to performing this test method.

5.2 Corrosive Reagents. The following reagents are hazardous. Personal protective equipment and safe procedures that prevent chemical splashes are recommended. If contact occurs, immediately flush with copious amounts of water for at least 15 minutes. Remove clothing under shower and decontaminate. Treat residual chemical burns as thermal burns.

5.2.1 Hydrochloric Acid (HCl). Highly corrosive liquid with toxic vapors. Vapors are highly irritating to eyes, skin, nose, and lungs, causing severe damage. May cause bronchitis, pneumonia, or edema of lungs. Exposure to concentrations of 0.13 to 0.2 percent can be lethal to humans in a few minutes. Provide ventilation to limit exposure. Reacts with metals, producing hydrogen gas.

5.2.2 Hydrofluoric Acid (HF). Highly corrosive to eyes, skin, nose, throat, and lungs. Reaction to exposure may be delayed by 24 hours or more. Provide ventilation to limit exposure.

5.2.3 Hydrogen Peroxide (H_2O_2). Very harmful to eyes. 30% H_2O_2can burn skin, nose, and lungs.

5.2.4 Nitric Acid (HNO_3). Highly corrosive to eyes, skin, nose, and lungs. Vapors are highly toxic and can cause bronchitis, pneumonia, or edema of lungs. Reaction to inhalation may be delayed as long as 30 hours and still be fatal. Provide ventilation to limit exposure. Strong oxidizer. Hazardous reaction may occur with organic materials such as solvents.

5.2.5 Sodium Hydroxide (NaOH). Causes severe damage to eyes and skin. Inhalation causes irritation to nose, throat, and lungs. Reacts exothermically with limited amounts of water.

6.0 Equipment and Supplies

6.1 Sample Collection and Preparation. The following items are required for sample collection and preparation:

6.1.1 Parr Acid Digestion Bomb. Stainless steel with vapor-tight Teflon cup and cover.

6.1.2 Volumetric Pipets. 2- and 5-ml sizes.

6.1.3 Volumetric Flask. 50-ml polypropylene with screw caps, (one needed per standard).

6.1.4 Funnel. Polyethylene or polypropylene.

6.1.5 Oven. Capable of maintaining a temperature of approximately 105 °C (221 °F).

6.1.6 Analytical Balance. To measure to within 0.1 mg.

6.2 Analysis. The following items are required for analysis:

6.2.1 Spectrophotometer and Recorder. Equipped with an electrodeless discharge lamp and a background corrector to measure absorbance at 193.7 nm. For measuring samples having less than 10 µg As/ml, use a graphite furnace or vapor generator accessory. The recorder shall match the output of the spectrophotometer.

6.2.2 Volumetric Flasks. Class A, 50-ml (one needed per sample and blank), 500-ml, and 1-liter.

6.2.3 Volumetric Pipets. Class A, 1-, 5-, 10-, and 25-ml sizes.

7.0 Reagents and Standards.

Unless otherwise indicated, it is intended that all reagents conform to the specifications established by the Committee on Analytical Reagents of the American Chemical Society, where such specifications are available; otherwise, use the best available grade.

7.1 Sample Collection and Preparation. The following reagents are required for sample collection and preparation:

7.1.1 Water. Deionized distilled to meet ASTM D 1193–77 or 91 Type 3 (incorporated by reference—See §61.18). When high concentrations of organic matter are not expected to be present, the $KMnO_4$test for oxidizable organic matter may be omitted. Use in all dilutions requiring water.

7.1.2 Nitric Acid Concentrated.

7.1.3 Nitric Acid, 0.5 N. In a 1-liter volumetric flask containing water, add 32 ml of concentrated $HNO_3$and dilute to volume with water.

7.1.4 Hydrofluoric Acid, Concentrated.

7.1.5 Potassium Chloride (KCl) Solution, 10 percent weight by volume (W/V). Dissolve 10 g KCl in water, add 3 ml concentrated HNO_3, and dilute to 100 ml.

7.1.6 Filter. Teflon filters, 3-micron porosity, 47-mm size. (Available from Millipore Co., type FS, Catalog Number FSLW04700.)

7.1.7 Sodium Borohydride ($NaBH_4$), 5 Percent (W/V). Dissolve 50.0 g of $NaBH_4$in about 500 ml of 0.1 N NaOH in a 1-liter volumetric flask. Then, dilute to exactly 1.0 liter with 0.1 N NaOH.

7.1.8 Nickel Nitrate, 5 Percent Ni (W/V). Dissolve 24.780 g of nickel nitrate hexahydrate [$Ni(NO_3)_2 6H_2O$] in water in a 100-ml volumetric flask, and dilute to 100 ml with water.

7.1.9 Nickel Nitrate, 1 Percent Ni (W/V). Pipet 20 ml of 5 percent nickel nitrate solution into a 100-ml volumetric flask, and dilute to 100 ml with water.

7.2 Analysis. The following reagents and standards are required for analysis:

7.2.1 Water. Same as in Section 7.1.1.

7.2.2 Sodium Hydroxide, 0.1 N. Dissolve 2.00 g of NaOH in water in a 500-ml volumetric flask. Dilute to volume with water.

7.2.3 Nitric Acid, 0.5 N. Same as in Section 7.1.3.

7.2.4 Potassium Chloride Solution, 10 percent. Same as in Section 7.1.5.

7.2.5 Hydrochloric Acid, Concentrated.

7.2.6 Potassium Iodide (KI), 30 Percent (W/V). Dissolve 300 g of KI in about 500 ml of water in a 1-liter volumetric flask. Then, dilute to exactly 1.0 liter with water.

7.2.7 Hydrogen Peroxide, 3 Percent by Volume. Pipet 50 ml of 30 percent H_2O_2into a 500-ml volumetric flask, and dilute to exactly 500 ml with water.

7.2.8 Stock Arsenic Standard, 1 mg As/ml. Dissolve 1.3203 g of primary grade As_2O_3in 20 ml of 0.1 N NaOH. Slowly add 30 ml of concentrated HNO_3, and heat in an oven at 105 °C (221 °F) for 2 hours. Allow to cool, and dilute to 1 liter with deionized distilled water.

7.2.9 Nitrous Oxide. Suitable quality for AAS analysis.

7.2.10 Acetylene. Suitable quality for AAS analysis.

7.2.11 Quality Assurance Audit Samples. When making compliance determinations, and upon availability, audit samples may be obtained from the appropriate EPA regional Office or from the responsible enforcement authority.

Note: The responsible enforcement authority should be notified at least 30 days prior to the test date to allow sufficient time for sample delivery.

8.0 Sample Collection, Preservation, Transport, and Storage

8.1 Sample Collection. A sample that is representative of the ore lot to be tested must be taken prior to analysis. (A portion of the samples routinely collected for metals analysis may be used provided the sample is representative of the ore being tested.)

8.2 Sample Preparation. The sample must be ground into a finely pulverized state.

9.0 Quality Control

Section	Quality control measure	Effect
10.2	Spectrophotometer calibration	Ensure linearity of spectrophotometer response to standards.
11.5	Check for matrix effects	Eliminate matrix effects

11.6	Audit sample analysis	Evaluate analyst's technique and standards preparation.

10.0 Calibration and Standardizations

Note: Maintain a laboratory log of all calibrations.

10.1 Preparation of Standard Solutions. Pipet 1, 5, 10, and 25 ml of the stock As solution into separate 100-ml volumetric flasks. Add 10 ml KCl solution and dilute to the mark with 0.5 N HNO_3. This will give standard concentrations of 10, 50, 100, and 250 µg As/ml. For low-level arsenic samples that require the use of a graphite furnace or vapor generator, follow the procedures in Section 11.3:1. Dilute 10 ml of KCl solution to 100 ml with 0.5 N $HNO_3$and use as a reagent blank.

10.2 Calibration Curve. Analyze the reagent blank and each standard solution according to the procedures outlined in Section 11.3. Repeat this procedure on each standard solution until two consecutive peaks agree within 3 percent of their average value. Subtract the average peak height (or peak area) of the blank—which must be less than 2 percent of recorder full scale—from the averaged peak heights of each standard solution. If the blank absorbance is greater than 2 percent of full-scale, the probable cause is Hg contamination of a reagent or carry-over of As from a previous sample. Prepare the calibration curve by plotting the corrected peak height of each standard solution versus the corresponding final total As weight in the solution.

10.3 Spectrophotometer Calibration Quality Control. Calculate the least squares slope of the calibration curve. The line must pass through the origin or through a point no further from the origin than ±2 percent of the recorder full scale. Multiply the corrected peak height by the reciprocal of the least squares slope to determine the distance each calibration point lies from the theoretical calibration line. The difference between the calculated concentration values and the actual concentrations must be less than 7 percent for all standards.

Note: For instruments equipped with direct concentration readout devices, preparation of a standard curve will not be necessary. In all cases, follow calibration and operational procedures in the manufacturer's instruction manual.

11.0 Analytical Procedure

11.1 Sample Preparation. Weigh 50 to 500 mg of finely pulverized sample to the nearest 0.1 mg. Transfer the sample into the Teflon cup of the digestion bomb, and add 2 ml each of concentrated $HNO_3$and HF. Seal the bomb immediately to prevent the loss of any volatile arsenic compounds that may form. Heat in an oven at 105 °C (221 °F) for 2 hours. Remove the bomb from the oven and allow to cool. Using a Teflon filter, quantitatively filter the digested sample into a 50-ml polypropylene volumetric flask. Rinse the bomb three times with small portions of 0.5 N HNO_3, and filter the rinses into the flask. Add 5 ml of KCl solution to the flask, and dilute to 50 ml with 0.5 N HNO_3.

11.2 Spectrophotometer Preparation.

11.2.1 Turn on the power; set the wavelength, slit width, and lamp current. Adjust the background corrector as instructed by the manufacturer's manual for the particular atomic absorption spectrophotometer. Adjust the burner and flame characteristics as necessary.

11.2.2 Develop a spectrophotometer calibration curve as outlined in Sections 10.2 and 10.3.

11.3 Arsenic Determination. Analyze an appropriately sized aliquot of each diluted sample (from Section 11.1) until two consecutive peak heights agree within 3 percent of their average value. If applicable, follow the procedures outlined in Section 11.3.1. If the sample concentration falls outside the range of the calibration curve, make an appropriate dilution with 0.5 N HNO_3so that

the final concentration falls within the range of the curve. Using the calibration curve, determine the As concentration in each sample.

Note: Because instruments vary between manufacturers, no detailed operating instructions will be given here. Instead, the instrument manufacturer's detailed operating instructions should be followed.

11.3.1 Arsenic Determination at Low Concentration. The lower limit of flame AAS is 10 µg As/ml. If the arsenic concentration of any sample is at a lower level, use the vapor generator or graphite furnace which is available as an accessory component. Flame, graphite furnace, or vapor generators may be used for samples whose concentrations are between 10 and 30 µg/ml. Follow the manufacturer's instructions in the use of such equipment.

11.3.1.1 Vapor Generator Procedure. Place a sample containing between 0 and 5 µg of arsenic in the reaction tube, and dilute to 15 ml with water. Since there is some trial and error involved in this procedure, it may be necessary to screen the samples by conventional AAS until an approximate concentration is determined. After determining the approximate concentration, adjust the volume of the sample accordingly. Pipet 15 ml of concentrated HCl into each tube. Add 1 ml of 30 percent KI solution. Place the reaction tube into a 50 °C (120 °F) water bath for 5 minutes. Cool to room temperature. Connect the reaction tube to the vapor generator assembly. When the instrument response has returned to baseline, inject 5.0 ml of 5 percent $NaBH_4$and integrate the resulting spectrophotometer signal over a 30-second time period.

11.3.1.2 Graphite Furnace Procedure. Pipet 5 ml of the digested solution into a 10-ml volumetric flask. Add 1 ml of the 1 percent nickel nitrate solution, 0.5 ml of 50 percent HNO_3, and 1 ml of the 3 percent H_2O_2, and dilute to 10 ml with water. The sample is now ready to inject in the furnace for analysis.

11.4 Run a blank and standard at least after every five samples to check the spectrophotometer calibration. The peak height of the blank must pass through a point no further from the origin than ±2 percent of the recorder full scale. The difference between the measured concentration of the standard (the product of the corrected average peak height and the reciprocal of the least squares slope) and the actual concentration of the standard must be less than 7 percent, or recalibration of the analyzer is required.

11.5 Mandatory Check for Matrix Effects on the Arsenic Results. Same as Method 12, Section 11.5.

11.6 Audit Sample Analysis.

11.6.1 When the method is used to analyze samples to demonstrate compliance with a source emission regulation, a set of EPA audit samples must be analyzed, subject to availability.

11.6.2 Concurrently analyze the audit samples and the compliance samples in the same manner to evaluate the technique of the analyst and the standards preparation.

Note: It is recommended that known quality control samples be analyzed prior to the compliance and audit sample analyses to optimize the system accuracy and precision. These quality control samples may be obtained by contacting the appropriate EPA regional Office or the responsible enforcement authority.

11.6.3 The same analyst, analytical reagents, and analytical system shall be used for the compliance samples and the EPA audit samples. If this condition is met, duplicate auditing of subsequent compliance analyses for the same enforcement agency within a 30-day period is waived. An audit sample set may not be used to validate different sets of compliance samples under the jurisdiction of separate enforcement agencies, unless prior arrangements have been made with both enforcement agencies.

11.7 Audit Sample Results.

11.7.1 Calculate the audit sample concentrations in g/m^3 and submit results using the instructions provided with the audit samples.

11.7.2 Report the results of the audit samples and the compliance determination samples along with their identification numbers, and the analyst's name to the responsible enforcement authority. Include this information with reports of any subsequent compliance analyses for the same enforcement authority during the 30-day period.

11.7.3 The concentrations of the audit samples obtained by the analyst shall agree within 10 percent of the actual concentrations. If the 10 percent specification is not met, reanalyze the compliance and audit samples, and include initial and reanalysis values in the test report.

11.7.4 Failure to meet the 10 percent specification may require retests until the audit problems are resolved. However, if the audit results do not affect the compliance or noncompliance status of the affected facility, the Administrator may waive the reanalysis requirement, further audits, or retests and accept the results of the compliance test. While steps are being taken to resolve audit analysis problems, the Administrator may also choose to use the data to determine the compliance or noncompliance status of the affected facility.

12.0 Data Analysis and Calculations

12.1 Calculate the percent arsenic in the ore sample as follows:

$$\% As = \frac{5 C_a F_d}{W} \qquad Eq.\ 108A\text{-}1$$

Where:

C_a= Concentration of As as read from the standard curve, µg/ml.

F_d= Dilution factor (equals to 1 if the sample has not been diluted).

W = Weight of ore sample analyzed, mg.

5 = (50 ml sample “ 100)/(10^3 µg/mg).

13.0 Method Performance

13.1 Sensitivity. The lower limit of flame AAS is 10 µg As/ml. The analytical procedure includes provisions for the use of a graphite furnace or vapor generator for samples with a lower arsenic concentration.

14.0 Pollution Prevention.[Reserved]

15.0 Waste Management.[Reserved]

16.0 References

Same as References 1 through 9 of Section 17.0 of Method 5, with the addition of the following:

1. Perkin Elmer Corporation. Analytical Methods of Atomic Absorption Spectrophotometry. 303–0152. Norwalk, Connecticut. September 1976. pp 5–6.

2. Ringwald, D. Arsenic Determination on Process Materials from ASARCO's Copper Smelter in Tacoma, Washington. Unpublished Report. Prepared for Emission Measurement Branch, Emission Standards and Engineering Division, U.S. Environmental Protection Agency, Research

Triangle Park, North Carolina. August 1980. 35 pp.

3. Stack Sampling Safety Manual (Draft). U.S. Environmental Protection Agency, Office of Air Quality Planning and Standard, Research Triangle Park, NC. September 1978.

17.0 Tables, Diagrams, Flowcharts, and Validation Data.[Reserved]

Method 108B—Determination of Arsenic Content in Ore Samples From Nonferrous Smelters

Note: This method does not include all of the specifications (*e.g.,* equipment and supplies) and procedures (*e.g.,* sampling and analytical) essential to its performance. Some material is incorporated by reference from other methods in this appendix and in appendix A to 40 CFR part 60. Therefore, to obtain reliable results, persons using this method should have a thorough knowledge of at least the following additional test methods: Method 12 and Method 108A.

1.0 Scope and Application

1.1 Analytes.

Analyte	CAS No.	Sensitivity
Arsenic compounds as arsenic (As)	7440–38–2	Lower limit 10 µg/ml.

1.2 Applicability. This method applies to the determination of inorganic As content of process ore and reverberatory matte samples from nonferrous smelters and other sources as specified in an applicable subpart of the regulations. Samples resulting in an analytical concentration greater than 10 µg As/ml may be analyzed by this method. For lower level arsenic samples, Method 108C should be used.

1.3 Data Quality Objectives. Adherence to the requirements of this method will enhance the quality of the data obtained from air pollutant sampling methods.

2.0 Summary of Method

Arsenic bound in ore samples is liberated by acid digestion and analyzed by flame atomic absorption spectrophotometry (AAS).

3.0 Definitions[Reserved]

4.0 Interferences

Analysis for As by flame AAS is sensitive to the chemical composition and to the physical properties (*e.g.,* viscosity, pH) of the sample. The analytical procedure includes a check for matrix effects (Section 11.4).

5.0 Safety

5.1 Disclaimer. This method may involve hazardous materials, operations, and equipment. This test method may not address all of the safety problems associated with its use. It is the responsibility of the user to establish appropriate safety and health practices and determine the applicability of regulatory limitations prior to performing this test method.

5.2 Corrosive Reagents. The following reagents are hazardous. Personal protective equipment and safe procedures that prevent chemical splashes are recommended. If contact occurs, immediately flush with copious amounts of water for at least 15 minutes. Remove clothing under shower and decontaminate. Treat residual chemical burns as thermal burns.

5.2.1 Hydrochloric acid (HCl). Highly corrosive liquid with toxic vapors. Vapors are highly irritating to eyes, skin, nose, and lungs, causing severe damage. May cause bronchitis, pneumonia, or edema of lungs. Exposure to concentrations of 0.13 to 0.2 percent can be lethal to humans in a few minutes. Provide ventilation to limit exposure. Reacts with metals, producing hydrogen gas.

5.2.2 Hydrofluoric Acid (HF). Highly corrosive to eyes, skin, nose, throat, and lungs. Reaction to exposure may be delayed by 24 hours or more. Provide ventilation to limit exposure.

5.2.3 Nitric Acid (HNO_3). Highly corrosive to eyes, skin, nose, and lungs. Vapors are highly toxic and can cause bronchitis, pneumonia, or edema of lungs. Reaction to inhalation may be delayed as long as 30 hours and still be fatal. Provide ventilation to limit exposure. Strong oxidizer. Hazardous reaction may occur with organic materials such as solvents.

5.2.4 Perchloric Acid ($HClO_4$). Corrosive to eyes, skin, nose, and throat. Provide ventilation to limit exposure. Very strong oxidizer. Keep separate from water and oxidizable materials to prevent vigorous evolution of heat, spontaneous combustion, or explosion. Heat solutions containing $HClO_4$only in hoods specifically designed for $HClO_4$.

6.0 Equipment and Supplies

6.1 Sample Preparation. The following items are required for sample preparation:

6.1.1 Teflon Beakers. 150-ml.

6.1.2 Graduated Pipets. 5-ml disposable.

6.1.3 Graduated Cylinder. 50-ml.

6.1.4 Volumetric Flask. 100-ml.

6.1.5 Analytical Balance. To measure within 0.1 mg.

6.1.6 Hot Plate.

6.1.7 Perchloric Acid Fume Hood.

6.2 Analysis. The following items are required for analysis:

6.2.1 Spectrophotometer. Equipped with an electrodeless discharge lamp and a background corrector to measure absorbance at 193.7 nm.

6.2.2 Beaker and Watch Glass. 400-ml.

6.2.3 Volumetric Flask. 1-liter.

6.2.4 Volumetric Pipets. 1-, 5-, 10-, and 25-ml.

7.0 Reagents and Standards

Unless otherwise indicated, it is intended that all reagents conform to the specifications established by the Committee on Analytical Reagents of the American Chemical Society, where such specifications are available; otherwise, use the best available grade.

7.1 Sample Preparation. The following reagents are required for sample preparation:

7.1.1 Water. Deionized distilled to meet ASTM D 1193–77 or 91 Type 3 (incorporated by reference—see §61.18).

7.1.2 Nitric Acid, Concentrated.

7.1.3 Hydrofluoric Acid, Concentrated.

7.1.4 Perchloric Acid, 70 Percent.

7.1.5 Hydrochloric Acid, Concentrated.

7.2 Analysis. The following reagents and standards are required for analysis:

7.2.1 Water. Same as in Section 7.1.1.

7.2.2 Stock Arsenic Standard, 1.0 mg As/ml. Dissolve 1.3203 g of primary grade As_20_3[dried at 105 °C (221 °F)] in a 400-ml beaker with 10 ml of $HNO_3$and 5 ml of HCl. Cover with a watch glass, and heat gently until dissolution is complete. Add 10 ml of $HNO_3$and 25 ml of $HClO_4$, evaporate to strong fumes of $HClO_4$, and reduce to about 20 ml volume. Cool, add 100 ml of water and 100 ml of HCl, and transfer quantitatively to a 1-liter volumetric flask. Dilute to volume with water and mix.

7.2.3 Acetylene. Suitable quality for AAS analysis.

7.2.4 Air. Suitable quality for AAS analysis.

7.2.5 Quality Assurance Audit Samples. Same as in Method 108A, Section 7.2.11.

8.0 Sample Collection, Preservation, Transport, and Storage

Same as in Method 108A, Sections 8.1 and 8.2.

9.0 Quality Control

Section	Quality control measure	Effect
10.2	Spectrophotometer calibration	Ensure linearity of spectrophotometer response to standards.
11.4	Check for matrix effects	Eliminate matrix effects.
11.5	Audit sample analysis	Evaluate analyst's technique and standards preparation.

10.0 Calibration and Standardization

Note: Maintain a laboratory log of all calibrations.

10.1 Preparation of Standard Solutions. Pipet 1, 5, 10, and 25 ml of the stock As solution into separate 100-ml volumetric flasks. Add 2 ml of $HClO_4$, 10 ml of HCl, and dilute to the mark with water. This will provide standard concentrations of 10, 50, 100, and 250 µg As/ml.

10.2 Calibration Curve and Spectrophotometer Calibration Quality Control. Same as Method 108A, Sections 10.2 and 10.3

11.0 Analytical Procedure

11.1 Sample Preparation. Weigh 100 to 1000 mg of finely pulverized sample to the nearest 0.1 mg. Transfer the sample to a 150-ml Teflon beaker. Dissolve the sample by adding 15 ml of

HNO_3, 10 ml of HCl, 10 ml of HF, and 10 ml of $HClO_4$in the exact order as described, and let stand for 10 minutes. In a $HClO_4$fume hood, heat on a hot plate until 2–3 ml of $HClO_4$remain, then cool. Add 20 ml of water and 10 ml of HCl. Cover and warm until the soluble salts are in solution. Cool, and transfer quantitatively to a 100-ml volumetric flask. Dilute to the mark with water.

11.2 Spectrophotometer Preparation. Same as in Method 108A, Section 11.2.

11.3 Arsenic Determination. If the sample concentration falls outside the range of the calibration curve, make an appropriate dilution with 2 percent $HClO_4$/10 percent HCl (prepared by diluting 2 ml concentrated $HClO_4$and 10 ml concentrated HCl to 100 ml with water) so that the final concentration falls within the range of the curve. Using the calibration curve, determine the As concentration in each sample.

Note: Because instruments vary between manufacturers, no detailed operating instructions will be given here. Instead, the instrument manufacturer's detailed operating instructions should be followed.

Run a blank and standard at least after every five samples to check the spectrophotometer calibration. The peak height of the blank must pass through a point no further from the origin than ±2 percent of the recorder full scale. The difference between the measured concentration of the standard (the product of the corrected average peak height and the reciprocal of the least squares slope) and the actual concentration of the standard must be less than 7 percent, or recalibration of the analyzer is required.

11.4 Mandatory Check for Matrix Effects on the Arsenic Results. Same as Method 12, Section 11.5.

11.5 Audit Sample Analysis. Same as in Method 108A, Section 11.6.

12.0 Data Analysis and Calculations

Same as in Method 108A, Section 12.0.

13.0 Method Performance

13.1 Sensitivity. The lower limit of flame AAS is 10 µg As/ml.

14.0 Pollution Prevention[Reserved]

15.0 Waste Management[Reserved]

16.0 References

Same as in Method 108A, Section 16.0.

17.0 Tables, Diagrams, Flowcharts, and Validation Data[Reserved]

Method 108C—Determination of Arsenic Content in Ore Samples From Nonferrous Smelters (Molybdenum Blue Photometric Procedure)

Note: This method does not include all of the specifications (*e.g.,* equipment and supplies) and procedures (*e.g.,* sampling and analytical) essential to its performance. Some material is incorporated by reference from other methods in this part. Therefore, to obtain reliable results, persons using this method should have a thorough knowledge of at least Method 108A.

1.0 Scope and Application

1.1 Analytes.

Analyte	CAS No.	Sensitivity
Arsenic compounds as arsenic (As)	7440–38–2	Lower limit 0.0002 percent As by weight.

1.2 Applicability. This method applies to the determination of inorganic As content of process ore and reverberatory matte samples from nonferrous smelters and other sources as specified in an applicable subpart of the regulations.

1.3 Data Quality Objectives. Adherence to the requirements of this method will enhance the quality of the data obtained from air pollutant sampling methods.

2.0 Summary of Method

Arsenic bound in ore samples is liberated by acid digestion and analyzed by the molybdenum blue photometric procedure.

3.0 Definitions.[Reserved]

4.0 Interferences.[Reserved]

5.0 Safety

5.1 Disclaimer. This method may involve hazardous materials, operations, and equipment. This test method may not address all of the safety problems associated with its use. It is the responsibility of the user to establish appropriate safety and health practices and determine the applicability of regulatory limitations prior to performing this test method.

5.2 Corrosive Reagents. The following reagents are hazardous. Personal protective equipment and safe procedures that prevent chemical splashes are recommended. If contact occurs, immediately flush with copious amounts of water for at least 15 minutes. Remove clothing under shower and decontaminate. Treat residual chemical burns as thermal burns.

5.2.1 Hydrochloric Acid (HCl). Highly corrosive liquid with toxic vapors. Vapors are highly irritating to eyes, skin, nose, and lungs, causing severe damage. May cause bronchitis, pneumonia, or edema of lungs. Exposure to concentrations of 0.13 to 0.2 percent can be lethal to humans in a few minutes. Provide ventilation to limit exposure. Reacts with metals, producing hydrogen gas.

5.2.2 Hydrofluoric Acid (HF). Highly corrosive to eyes, skin, nose, throat, and lungs. Reaction to exposure may be delayed by 24 hours or more. Provide ventilation to limit exposure.

5.2.3 Nitric Acid (HNO_4). Highly corrosive to eyes, skin, nose, and lungs. Vapors are highly toxic and can cause bronchitis, pneumonia, or edema of lungs. Reaction to inhalation may be delayed as long as 30 hours and still be fatal. Provide ventilation to limit exposure. Strong oxidizer. Hazardous reaction may occur with organic materials such as solvents.

5.2.4 Perchloric Acid ($HClO_4$). Corrosive to eyes, skin, nose, and throat. Provide ventilation to limit exposure. Very strong oxidizer. Keep separate from water and oxidizable materials to prevent vigorous evolution of heat, spontaneous combustion, or explosion. Heat solutions containing $HClO_4$only in hoods specifically designed for $HClO_4$.

5.2.5 Sulfuric acid (H_2SO_4). Rapidly destructive to body tissue. Will cause third degree burns. Eye damage may result in blindness. Inhalation may be fatal from spasm of the larynx, usually within 30 minutes. May cause lung tissue damage with edema. 3 mg/m^3 will cause lung damage in uninitiated. 1 mg/m^3 for 8 hours will cause lung damage or, in higher concentrations, death. Provide ventilation to limit inhalation. Reacts violently with metals and organics.

6.0 Equipment and Supplies

6.1 Sample Preparation. The following items are required for sample preparation:

6.1.1 Analytical Balance. To measure to within 0.1 mg.

6.1.2 Erlenmeyer Flask. 300-ml.

6.1.3 Hot Plate.

6.1.4 Distillation Apparatus. No. 6, in ASTM E 50–82, 86, or 90 (Reapproved 1995)(incorporated by reference—see §61.18); detailed in Figure 108C–1.

6.1.5 Graduated Cylinder. 50-ml.

6.1.6 Perchloric Acid Fume Hood.

6.2 Analysis. The following items are required for analysis:

6.2.1 Spectrophotometer. Capable of measuring at 660 nm.

6.2.2 Volumetric Flasks. 50- and 100-ml.

7.0 Reagents and Standards

Unless otherwise indicated, it is intended that all reagents conform to the specifications established by the Committee on Analytical Reagents of the American Chemical Society, where such specifications are available; otherwise, use the best available grade.

7.1 Sample Preparation. The following reagents are required for sample preparation:

7.1.1 Water. Deionized distilled to meet ASTM D 1193–77 or 91 Type 3 (incorporated by reference—see §61.18). When high concentrations of organic matter are not expected to be present, the $KMnO_4$test for oxidizable organic matter may be omitted. Use in all dilutions requiring water.

7.1.2 Nitric Acid, Concentrated.

7.1.3 Hydrofluoric Acid, Concentrated.

7.1.4 Sulfuric Acid, Concentrated.

7.1.5 Perchloric Acid, 70 Percent.

7.1.6 Hydrochloric Acid, Concentrated.

7.1.7 Dilute Hydrochloric Acid. Add one part concentrated HCl to nine parts water.

7.1.8 Hydrazine Sulfate ($(NH_2)_2 \cdot H_2SO_4$).

7.1.9 Potassium Bromide (KBr).

7.1.10 Bromine Water, Saturated.

7.2 Analysis. The following reagents and standards are required for analysis:

7.2.1 Water. Same as in Section 7.1.1.

7.2.2 Methyl Orange Solution, 1 g/liter.

7.2.3 Ammonium Molybdate Solution, 5 g/liter. Dissolve 0.5 g $(NH_4)Mo_7O_{24}\cdot 4H_2O$ in water in a 100-ml volumetric flask, and dilute to the mark. This solution must be freshly prepared.

7.2.4 Standard Arsenic Solution, 10 µg As/ml. Dissolve 0.13203 g of As_2O_3in 100 ml HCl in a 1-liter volumetric flask. Add 200 ml of water, cool, dilute to the mark with water, and mix. Transfer 100 ml of this solution to a 1-liter volumetric flask, add 40 ml HCl, cool, dilute to the mark, and mix.

7.2.5 Hydrazine Sulfate Solution, 1 g/liter. Dissolve 0.1 g of $[(NH_2)_2\cdot H_2SO_4]$ in water, and dilute to 100 ml in a volumetric flask. This solution must be freshly prepared.

7.2.6 Potassium Bromate ($KBrO_3$) Solution, 0.03 Percent Weight by Volume (W/V). Dissolve 0.3 g $KBrO_3$in water, and dilute to 1 liter with water.

7.2.7 Ammonium Hydroxide (NH_4OH), Concentrated.

7.2.8 Boiling Granules.

7.2.9 Hydrochloric Acid, 50 percent by volume. Dilute equal parts concentrated HCl with water.

7.2.10 Quality Assurance Audit Samples. Same as in Method 108A, Section 7.2.11.

8.0 Sample Collection, Preservation, Transport, and Storage

Same as in Method 108A, Sections 8.1 and 8.2.

9.0 Quality Control

Section	Quality control measure	Effect
10.2	Calibration curve preparation	Ensure linearity of spectrophotometric analysis of standards.
11.3	Audit sample analysis	Evaluate analyst's technique and standards preparation.

10.0 Calibration and Standardizations

Note: Maintain a laboratory log of all calibrations.

10.1 Preparation of Standard Solutions. Transfer 1.0, 2.0, 4.0, 8.0, 12.0, 16.0, and 20.0 ml of standard arsenic solution (10 µg/ml) to each of seven 50-ml volumetric flasks. Dilute to 20 ml with dilute HCl. Add one drop of methyl orange solution and neutralize to the yellow color with dropwise addition of NH_4OH. Just bring back to the red color by dropwise addition of dilute HCl, and add 10 ml in excess. Proceed with the color development as described in Section 11.2.

10.2 Calibration Curve. Plot the spectrophotometric readings of the calibration solutions against µg As per 50 ml of solution. Use this curve to determine the As concentration of each sample.

10.3 Spectrophotometer Calibration Quality Control. Calculate the least squares slope of the calibration curve. The line must pass through the origin or through a point no further from the origin than ±2 percent of the recorder full scale. Multiply the corrected peak height by the reciprocal of the least squares slope to determine the distance each calibration point lies from the theoretical calibration line. The difference between the calculated concentration values and the actual concentrations must be less than 7 percent for all standards.

11.0 Analytical Procedure

11.1 Sample Preparation.

11.1.1 Weigh 1.0 g of finely pulverized sample to the nearest 0.1 mg. Transfer the sample to a 300 ml Erlenmeyer flask and add 15 ml of HNO_3, 4 ml HCl, 2 ml HF, 3 ml $HClO_4$, and 15 ml H_2SO_4, in the order listed. In a $HClO_4$fume hood, heat on a hot plate to decompose the sample. Then heat while swirling over an open flame until dense white fumes evolve. Cool, add 15 ml of water, swirl to hydrate the H_2SO_4completely, and add several boiling granules. Cool to room temperature.

11.1.2 Add 1 g of KBr, 1 g hydrazine sulfate, and 50 ml HCl. Immediately attach the distillation head with thermometer and dip the side arm into a 50-ml graduated cylinder containing 25 ml of water and 2 ml of bromine water. Keep the graduated cylinder immersed in a beaker of cold water during distillation. Distill until the temperature of the vapor in the flask reaches 107 °C (225 °F). When distillation is complete, remove the flask from the hot plate, and simultaneously wash down the side arm with water as it is removed from the cylinder.

11.1.3 If the expected arsenic content is in the range of 0.0020 to 0.10 percent, dilute the distillate to the 50-ml mark of the cylinder with water, stopper, and mix. Transfer a 5.0-ml aliquot to a 50-ml volumetric flask. Add 10 ml of water and a boiling granule. Place the flask on a hot plate, and heat gently until the bromine is expelled and the color of methyl orange indicator persists upon the addition of 1 to 2 drops. Cool the flask to room temperature. Neutralize just to the yellow color of the indicator with dropwise additions of NH_4OH. Bring back to the red color by dropwise addition of dilute HCl, and add 10 ml excess. Proceed with the molybdenum blue color development as described in Section 11.2.

11.1.4 If the expected arsenic content is in the range of 0.0002 to 0.0010 percent As, transfer either the entire initial distillate or the measured remaining distillate from Section 11.1.2 to a 250-ml beaker. Wash the cylinder with two successive portions of concentrated HNO_3, adding each portion to the distillate in the beaker. Add 4 ml of concentrated $HClO_4$, a boiling granule, and cover with a flat watch glass placed slightly to one side. Boil gently on a hot plate until the volume is reduced to approximately 10 ml. Add 3 ml of HNO_3, and continue the evaporation until $HClO_4$is refluxing on the beaker cover. Cool briefly, rinse the underside of the watch glass and the inside of the beaker with about 3–5 ml of water, cover, and continue the evaporation to expel all but 2 ml of the $HClO_4$.

Note: If the solution appears cloudy due to a small amount of antimony distilling over, add 4 ml of 50 percent HCl and 5 ml of water, cover, and warm gently until clear. If cloudiness persists, add 5 ml of $HNO_3$and 2 ml H_2SO_4. Continue the evaporation of volatile acids to solubilize the antimony until dense white fumes of H_2SO_4appear. Retain at least 1 ml of the H_2SO_4.

11.1.5 To the 2 ml of $HClO_4$solution or 1 ml of H_2SO_4solution, add 15 ml of water, boil gently for 2 minutes, and then cool. Proceed with the molybdenum blue color development by neutralizing the solution directly in the beaker just to the yellow indicator color by dropwise addition of NH_4OH. Obtain the red color by dropwise addition of dilute HCl. Transfer the solution to a 50-ml volumetric flask. Rinse the beaker successively with 10 ml of dilute HCl, followed by several small portions of water. At this point the volume of solution in the flask should be no more than 40 ml. Continue with the color development as described in Section 11.2.

11.2 Analysis.

11.2.1 Add 1 ml of $KBrO_3$solution to the flask and heat on a low-temperature hot plate to about 50 °C (122 °F) to oxidize the arsenic and methyl orange. Add 5.0 ml of ammonium molybdate solution to the warm solution and mix. Add 2.0 ml of hydrazine sulfate solution, dilute until the solution comes within the neck of the flask, and mix. Place the flask in a 400 ml beaker, 80 percent full of boiling water, for 10 minutes. Enough heat must be supplied to prevent the water bath from cooling much below the boiling point upon inserting the volumetric flask. Remove the flask, cool to room temperature, dilute to the mark, and mix.

11.2.2 Transfer a suitable portion of the reference solution to an absorption cell, and adjust the spectrophotometer to the initial setting using a light band centered at 660 nm. While maintaining this spectrophotometer adjustment, take the readings of the calibration solutions followed by the samples.

11.3 Audit Sample Analysis. Same as in Method 108A, Section 11.6.

12.0 Data Analysis and Calculations

Same as in Method 108A, Section 12.0.

13.0 Method Performance.[Reserved]

14.0 Pollution Prevention.[Reserved]

15.0 Waste Management.[Reserved]

16.0 References

1. Ringwald, D. Arsenic Determination on Process Materials from ASARCO's Copper Smelter in Tacoma, Washington. Unpublished Report. Prepared for the Emission Measurement Branch, Technical Support Division, U.S. Environmental Protection Agency, Research Triangle Park, North Carolina. August 1980. 35 pp.

17.0 Tables, Diagrams, Flowcharts, and Validation

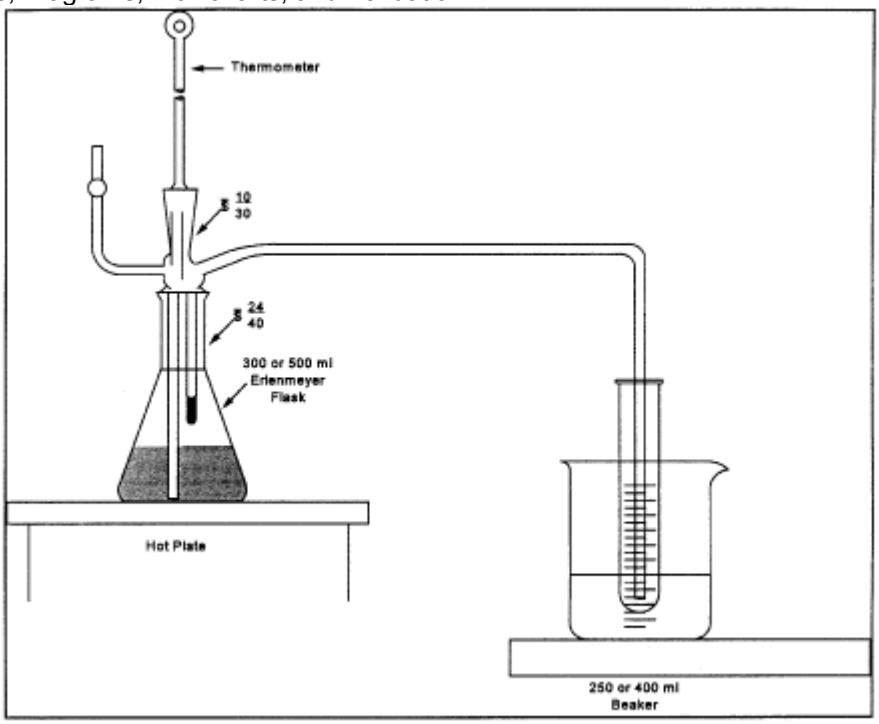

Data

Figure 108C-1. Distillation Apparatus.

Method 111—Determination of Polonium–210 Emissions From Stationary Sources

Note: This method does not include all of the specifications (*e.g.,* equipment and supplies) and procedures (*e.g.,* sampling and analytical) essential to its performance. Some material is incorporated by reference from methods in appendix A to 40 CFR part 60. Therefore, to obtain reliable results, persons using this method should have a thorough knowledge of at least the following additional test methods: Method 1, Method 2, Method 3, and Method 5.

1.0 Scope and Application

1.1 Analytes.

Analyte	CAS No.	Sensitivity
Polonium	7440–08–6	Not specified.

1.2 Applicability. This method is applicable for the determination of the polonium-210 content of particulate matter samples collected from stationary source exhaust stacks, and for the use of these data to calculate polonium-210 emissions from individual sources and from all affected sources at a facility.

1.3 Data Quality Objectives. Adherence to the requirements of this method will enhance the quality of the data obtained from air pollutant sampling methods.

2.0 Summary of Method

A particulate matter sample, collected according to Method 5, is analyzed for polonium-210 content: the polonium-210 in the sample is put in solution, deposited on a metal disc, and the radioactive disintegration rate measured. Polonium in acid solution spontaneously deposits on surfaces of metals that are more electropositive than polonium. This principle is routinely used in the radiochemical analysis of polonium-210. Data reduction procedures are provided, allowing the calculation of polonium-210 emissions from individual sources and from all affected sources at a facility, using data obtained from Methods 2 and 5 and from the analytical procedures herein.

3.0 Definitions[Reserved]

4.0 Interferences[Reserved]

5.0 Safety

5.1 Disclaimer. This method may involve hazardous materials, operations, and equipment. This test method may not address all of the safety problems associated with its use. It is the responsibility of the user of this test method to establish appropriate safety and health practices and determine the applicability of regulatory limitations prior to performing this test method.

5.2 Corrosive Reagents. The following reagents are hazardous. Personal protective equipment and safe procedures are useful in preventing chemical splashes. If contact occurs, immediately flush with copious amounts of water at least 15 minutes. Remove clothing under shower and decontaminate. Treat residual chemical burns as thermal burns.

5.2.1 Hydrochloric Acid (HCl). Highly corrosive liquid with toxic vapors. Vapors are highly irritating to eyes, skin, nose, and lungs, causing severe damage. May cause bronchitis, pneumonia, or edema of lungs. Exposure to concentrations of 0.13 to 0.2 percent can be lethal to humans in a few minutes. Provide ventilation to limit exposure. Reacts with metals, producing hydrogen gas.

5.2.2 Hydrofluoric Acid (HF). Highly corrosive to eyes, skin, nose, throat, and lungs. Reaction to exposure may be delayed by 24 hours or more. Provide ventilation to limit exposure.

5.2.3 Nitric Acid (HNO_3). Highly corrosive to eyes, skin, nose, and lungs. Vapors cause bronchitis, pneumonia, or edema of lungs. Reaction to inhalation may be delayed as long as 30 hours and still be fatal. Provide ventilation to limit exposure. Strong oxidizer. Hazardous reaction may occur with organic materials such as solvents.

5.2.4 Perchloric Acid ($HClO_4$). Corrosive to eyes, skin, nose, and throat. Provide ventilation to limit exposure. Keep separate from water and oxidizable materials to prevent vigorous evolution of heat, spontaneous combustion, or explosion. Heat solutions containing $HClO_4$only in hoods specifically designed for $HClO_4$.

6.0 Equipment and Supplies

6.1 Alpha Spectrometry System. Consisting of a multichannel analyzer, biasing electronics, silicon surface barrier detector, vacuum pump and chamber.

6.2 Constant Temperature Bath at 85 °C (185 °F).

6.3 Polished Silver Discs. 3.8 cm diameter, 0.4 mm thick with a small hole near the edge.

6.4 Glass Beakers. 400 ml, 150 ml.

6.5 Hot Plate, Electric.

6.6 Fume Hood.

6.7 Teflon Beakers, 150 ml.

6.8 Magnetic Stirrer.

6.9 Stirring Bar.

6.10 Hooks. Plastic or glass, to suspend plating discs.

6.11 Internal Proportional Counter. For measuring alpha particles.

6.12 Nucleopore Filter Membranes. 25 mm diameter, 0.2 micrometer pore size or equivalent.

6.13 Planchets. Stainless steel, 32 mm diameter with 1.5 mm lip.

6.14 Transparent Plastic Tape. 2.5 cm wide with adhesive on both sides.

6.15 Epoxy Spray Enamel.

6.16 Suction Filter Apparatus. For 25 mm diameter filter.

6.17 Wash Bottles, 250 ml capacity.

6.18 Graduated Cylinder, plastic, 25 ml capacity.

6.19 Volumetric Flasks, 100 ml, 250 ml.

7.0 Reagents and Standards

Unless otherwise indicated, it is intended that all reagents conform to the specifications established by the Committee on Analytical Reagents of the American Chemical Society, where such specifications are available; otherwise, use the best available grade.

7.1 Ascorbic Acid.

7.2 Ammonium Hydroxide (NH_4OH), 15 M.

7.3 Water. Deionized distilled, to conform to ASTM D 1193–77 or 91 (incorporated by reference—see §61.18), Type 3. Use in all dilutions requiring water.

7.4 Ethanol (C_2H_5OH), 95 percent.

7.5 Hydrochloric Acid, 12 M.

7.6 Hydrochloric Acid, 1 M. Dilute 83 ml of the 12 M HCl to 1 liter with distilled water.

7.7 Hydrofluoric Acid, 29 M.

7.8 Hydrofluoric Acid, 3 M. Dilute 52 ml of the 29 M HF to 500 ml with distilled water. Use a plastic graduated cylinder and storage bottle.

7.9 Lanthanum Carrier, 0.1 mg La+3/ml. Dissolve 0.078 gram lanthanum nitrate, $La(NO_3)_3 \cdot 6H_2O$ in 250 ml of 1 M HCl.

7.10 Nitric Acid, 16 M.

7.11 Perchloric Acid, 12 M.

7.12 Polonium-209 Solution.

7.13 Silver Cleaner. Any mild abrasive commercial silver cleaner.

7.14 Degreaser.

7.15 Standard Solution. Standardized solution of an alpha-emitting actinide element, such as plutonium-239 or americium-241.

8.0 Sample Collection, Preservation, Transport, and Storage.[Reserved]

9.0 Quality Control

9.1 General Requirement.

9.1.1 All analysts using this method are required to demonstrate their ability to use the method and to define their respective accuracy and precision criteria.

9.2 Miscellaneous Quality Control Measures.

Section	Quality control measure	Effect
10.1	Standardization of alpha spectrometry system	Ensure precision of sample analyses.
10.3	Standardization of internal proportional counter	Ensure precise sizing of sample aliquot.
11.1, 11.2	Determination of procedure background and instrument background	Minimize background effects.
11.3	Audit sample analysis	Evaluate analyst's technique.

10.0 Calibration and Standardization

10.1 Standardization of Alpha Spectrometry System.

10.1.1 Add a quantity of the actinide standard solution to a 100 ml volumetric flask so that the final concentration when diluted to a volume of 100 ml will be approximately 1_pCi/ml.

10.1.2 Add 10 ml of 16 M $HNO_3$and dilute to 100 ml with water.

10.1.3 Add 20 ml of 1 M HCl to each of six 150 ml beakers. Add 1.0 ml of lanthanum carrier, 0.1 mg lanthanum per ml, to the acid solution in each beaker.

10.1.4 Add 1.0 ml of the 1 pCi/ml working solution (from Section 10.1.1) to each beaker. Add 5.0 ml of 3 M HF to each beaker.

10.1.5 Cover beakers and allow solutions to stand for a minimum of 30 minutes. Filter the contents of each beaker through a separate filter membrane using the suction filter apparatus. After each filtration, wash the filter membrane with 10 ml of distilled water and 5 ml of ethanol, and allow the filter membrane to air dry on the filter apparatus.

10.1.6 Carefully remove the filter membrane and mount it, filtration side up, with double-side tape on the inner surface of a planchet. Place planchet in an alpha spectrometry system and count each planchet for 1000 minutes.

10.1.7 Calculate the counting efficiency of the detector for each aliquot of the 1 pCi/ml actinide working solution using Eq. 111–1 in Section 12.2.

10.1.8 Determine the average counting efficiency of the detector, E_c, by calculating the average of the six determinations.

10.2 Preparation of Standardized Solution of Polonium-209.

10.2.1 Add a quantity of the Po-209 solution to a 100 ml volumetric flask so that the final concentration when diluted to a 100 ml volume will be approximately 1 pCi/ml.

10.2.2 Follow the procedures outlined in Sections 10.1.2 through 10.1.6, except substitute 1.0 ml of polonium-209 tracer solution (Section 10.2.1) and 3.0 ml of 15 M ammonium hydroxide for the 1 pCi/ml actinide working solution and the 3 M HF, respectively.

10.2.3 Calculate the activity of each aliquot of the polonium-209 tracer solution using Eq. 111–2 in Section 12.3.

10.2.4 Determine the average activity of the polonium-209 tracer solution, F, by averaging the results of the six determinations.

10.3 Standardization of Internal Proportional Counter

10.3.1 Add a quantity of the actinide standard solution to a 100 ml volumetric flask so that the final concentration when diluted to a 100 ml volume will be approximately 100 pCi/ml.

10.3.2 Follow the procedures outlined in Sections 10.1.2 through 10.1.6, except substitute the 100 pCi/ml actinide working solution for the 1 pCi/ml solution, place the planchet in an internal proportional counter (instead of an alpha spectrometry system), and count for 100 minutes (instead of 1000 minutes).

10.3.3 Calculate the counting efficiency of the internal proportional counter for each aliquot of the 100 pCi/ml actinide working solution using Eq. 111–3 in 12.4.

10.3.4 Determine the average counting efficiency of the internal proportional counter, E_I, by averaging the results of the six determinations.

11.0 Analytical Procedure

Note: Perform duplicate analyses of all samples, including background counts, quality assurance audit samples, and Method 5 samples. Duplicate measurements are considered acceptable when the difference between them is less than two standard deviations as described in EPA 600/4–77–001 or subsequent revisions.

11.1 Determination of Procedure Background. Background counts used in all equations are determined by performing the specific analysis required using the analytical reagents only. All procedure background counts and sample counts for the internal proportional counter should utilize a counting time of 100 minutes; for the alpha spectrometry system, 1000 minutes. These background counts should be performed no less frequently than once per 10 sample analyses.

11.2 Determination of Instrument Background. Instrument backgrounds of the internal proportional counter and the alpha spectrometry system should be determined on a weekly basis. Instrument background should not exceed procedure background. If this occurs, it may be due to a malfunction or contamination, and should be corrected before use.

11.3 Quality Assurance Audit Samples. An externally prepared performance evaluation sample shall be analyzed no less frequently than once per 10 sample analyses, and the results reported with the test results.

11.4 Sample Preparation. Treat the Method 5 samples [*i.e.,* the glass fiber filter (Container No. 1) and the acetone rinse (Container No. 2)] as follows:

11.4.1 Container No. 1. Transfer the filter and any loose particulate matter from the sample container to a 150-ml Teflon beaker.

11.4.2 Container No. 2. Note the level of liquid in the container, and confirm on the analysis sheet whether leakage occurred during transport. If a noticeable amount of leakage has occurred, either void the sample or use methods, subject to the approval of the Administrator, to correct the final results. Transfer the contents to a 400-ml glass beaker. Add polonium-209 tracer solution to the glass beaker in an amount approximately equal to the amount of polonium-210 expected in the total particulate sample. Record the activity of the tracer solution added. Add 16 M nitric acid to the beaker to digest and loosen the residue.

11.4.3 Transfer the contents of the glass beaker to the Teflon beaker containing the glass fiber filter. Rinse the glass beaker with 16 M HNO_3. If necessary, reduce the volume in the beaker by evaporation until all of the nitric acid $HNO_3$from the glass beaker has been transferred to the Teflon beaker.

11.4.4 Add 30 ml of 29 M HF to the Teflon beaker and evaporate to near dryness on a hot plate in a properly operating hood.

Note: Do not allow the residue to go to dryness and overheat; this will result in loss of polonium.

11.4.5 Repeat step 11.4.4 until the filter is dissolved.

11.4.6 Add 100 ml of 16 M $HNO_3$to the residue in the Teflon beaker and evaporate to near dryness.

Note: Do not allow the residue to go to dryness.

11.4.7 Add 50 ml of 16 M $HNO_3$and 10 ml of 12 M perchloric acid to the Teflon beaker and heat until dense fumes of perchloric acid are evolved.

11.4.8 Repeat steps 11.4.4 to 11.4.7 as necessary until sample is completely dissolved.

11.4.9 Add 10 ml of 12 M HCl to the Teflon beaker and evaporate to dryness. Repeat additions and evaporations several times.

11.4.10 Transfer the sample to a 250-ml volumetric flask and dilute to volume with 3 M HCl.

11.5 Sample Screening. To avoid contamination of the alpha spectrometry system, check each sample as follows:

11.5.1 Add 20 ml of 1 M HCl, 1 ml of the lanthanum carrier solution (0.1 mg La/ml), a 1 ml aliquot of the sample solution from Section 11.4.10, and 3 ml of 15 M ammonium hydroxide to a 250-ml beaker in the order listed. Allow this solution to stand for a minimum of 30 minutes.

11.5.2 Filter the solution through a filter membrane using the suction filter apparatus. Wash the filter membrane with 10 ml of water and 5 ml of ethanol, and allow the filter membrane to air dry on the filter apparatus.

11.5.3 Carefully remove the filter membrane and mount it, filtration side up, with double-side tape on the inner surface of a planchet. Place the planchet in an internal proportional counter, and count for 100 minutes.

11.5.4 Calculate the activity of the sample using Eq. 111–4 in Section 12.5.

11.5.5 Determine the aliquot volume of the sample solution from Section 11.4.10 to be analyzed for polonium-210, such that the aliquot contains an activity between 1 and 4 picocuries. Use Eq. 111–5 in Section 12.6.

11.6 Preparation of Silver Disc for Spontaneous Electrodeposition.

11.6.1 Clean both sides of the polished silver disc with silver cleaner and with degreaser.

11.6.2 Place disc on absorbent paper and spray one side with epoxy spray enamel. This should be carried out in a well-ventilated area, with the disc lying flat to keep paint on one side only. Allow paint to dry for 24 hours before using disc for deposition.

11.7 Sample Analysis.

11.7.1 Add the aliquot of sample solution from Section 11.4.10 to be analyzed for polonium-210, the volume of which was determined in Section 11.5.5, to a suitable 200-ml container to be placed in a constant temperature bath.

Note: Aliquot volume may require a larger container.

11.7.2 If necessary, bring the volume to 100 ml with 1 M HCl. If the aliquot volume exceeds 100 ml, use total aliquot.

11.7.3 Add 200 mg of ascorbic acid and heat solution to 85 °C (185 °F) in a constant temperature bath.

11.7.4 Suspend a silver disc in the heated solution using a glass or plastic rod with a hook inserted through the hole in the disc. The disc should be totally immersed in the solution, and the solution must be stirred constantly, at all times during the plating operation. Maintain the disc in solution for 3 hours.

11.7.5 Remove the silver disc, rinse with deionized distilled water, and allow to air dry at room temperature.

11.7.6 Place the disc, with deposition side (unpainted side) up, on a planchet and secure with double-side plastic tape. Place the planchet with disc in alpha spectrometry system and count for 1000 minutes.

12.0 Data Analysis and Calculations.

12.1 Nomenclature.

A = Picocuries of polonium-210 in the Method 5 sample (from Section 12.8).

A_A= Picocuries of actinide added.

A_L= Volume of sample aliquot used, in ml (specified in Section 11.5.1 as 1 ml).

A_S= Aliquot to be analyzed, in ml.

B_B= Procedure background counts measured in polonium-209 spectral region.

B_T= Polonium-209 tracer counts in sample.

C_T= Total counts in polonium-210 spectral region.

D = Decay correction for time "t" (in days) from sample collection to sample counting, given by: $D=e^{-0.005t}$

E_C= Average counting efficiency of detector (from Section 10.1.8), as counts per disintegration.

E_{Ci}= Counting efficiency of the detector for aliquot i of the actinide working solution, counts per disintegration.

E_I= Average counting efficiency of the internal proportional counter, as determined in Section 10.3.4, counts per disintegration.

E_{Ii}= Counting efficiency of the internal proportional counter for aliquot i of the 100 pCi/ml actinide working solution, counts per disintegration.

E_Y= The fraction of polonium-209 recovered on the planchet (from Section 12.7).

F= Average activity of polonium-209 in sample (from Section 10.2.4), in pCi.

F_i= activity of aliquot i of the polonium-209 tracer solution, in pCi.

L = Dilution factor (unitless). This is the volume of sample solution prepared (specified as 250 ml in Section 11.1.10) divided by the volume of the aliquot of sample solution analyzed for polonium-210 (from Section 11.7.1).

M_i= Phosphorous rock processing rate of the source being tested, during run i, Mg/hr.

M_k= Phosphate rock processed annually by source k, in Mg/yr.

n = Number of calciners at the elemental phosphorus plant.

P = Total activity of sample solution from Section 11.4.10, in pCi (see Eq. 111–4).

Q_{sd}= Volumetric flow rate of effluent stream, as determined by Method 2, in dscm/hr.

S = Annual polonium-210 emissions from the entire facility, in curies/yr.

Vm(std)= Volume of air sample, as determined by Method 5, in dscm.

X_k= Emission rate from source k, from Section 12.10, in curies/Mg.

10^{-12}= Curies per picocurie.

2.22 = Disintegrations per minute per picocurie.

250 = Volume of solution from Section 11.4.10, in ml.

12.2 Counting Efficiency. Calculate the counting efficiency of the detector for each aliquot of the 1 pCi/ml actinide working solution using Eq. 111–1.

$$E_{Ci} = \frac{C_S - C_B}{2.22\ A_A T} \qquad Eq.\ 111\text{-}1$$

Where:

C_B= Background counts in same peak area as C_S.

C_S= Gross counts in actinide peak.

T = Counting time in minutes, specified in Section 10.1.6 as 1000 minutes.

12.3 Polonium-209 Tracer Solution Activity. Calculate the activity of each aliquot of the polonium-209 tracer solution using Eq. 111–2.

$$F_i = \frac{C_S - C_B}{2.22\ E_{Ci} T} \qquad Eq.\ 111\text{-}2$$

Where:

C_B= Background counts in the 4.88 MeV region of spectrum the in the counting time T.

C_S= Gross counts of polonium-209 in the 4.88 MeV region of the spectrum in the counting time T.

T = Counting time, specified in Section 10.1.6 as 1000 minutes.

12.4 Control Efficiency of Internal Proportional Counter. Calculate the counting efficiency of the internal proportional counter for each aliquot of the 100 pCi/ml actinide working solution using Eq. 111–3.

$$E_{Ri} = \frac{C_S - C_B}{2.22\ A_A T} \qquad Eq.\ 111\text{-}3$$

Where:

C_B= Gross counts of procedure background.

C_S= Gross counts of standard.

T = Counting time in minutes, specified in Section 10.3.2 as 100 minutes.

12.5 Calculate the activity of the sample using Eq. 111–4.

$$P = \frac{250\ (C_S - C_B)}{2.22\ \overline{E}_I A_I T} \qquad Eq.\ 111\text{-}4$$

Where:

C_B= Total counts of procedure background. (See Section 11.1).

C_S= Total counts of screening sample.

T = Counting time for sample and background (which must be equal), in minutes (specified in Section 11.5.3 as 100 minutes).

12.6 Aliquot Volume. Determine the aliquot volume of the sample solution from Section 11.4.10 to be analyzed for polonium-210 , such that the aliquot contains an activity between 1 and 4 picocuries using Eq. 111–5.

$$A_s = \frac{250 \text{ (desired picocuries in aliquot)}}{\mathrm{P}} \qquad Eq.\ 111\text{-}5$$

12.7 Polonium-209 Recovery. Calculate the fraction of polonium-209 recovered on the planchet, E_Y, using Eq. 111–6.

$$E_Y = \frac{B_T - B_B}{2.22\ \overline{\mathrm{F}}\ \overline{E_C}\ T} \qquad Eq.\ 111\text{-}6$$

Where:

T = Counting time, specified in Section 11.1 as 1000 minutes.

12.8 Polonium-210 Activity. Calculate the activity of polonium-210 in the Method 5 sample (including glass fiber filter and acetone rinse) using Eq. 111–7.

$$A = \frac{\left(C_T - C_B\right)\ \mathrm{L}}{2.22\ \mathrm{E_y}\ \overline{E_C}\ T\ D} \qquad Eq.\ 111\text{-}7$$

Where:

C_B= Procedure background counts in polonium-210 spectral region.

T = Counting time, specified in Section 11.1 as 1000 minutes for all alpha spectrometry sample and background counts.

12.9 Emission Rate from Each Stack.

12.9.1 For each test run, i, on a stack, calculate the measured polonium-210 emission rate, R_{Si}, using Eq. 111–8.

$$R_{Si} = \frac{\left(10^{-12}\right) A\,\mathrm{Q}_{sd}}{V_{m(std)} M_i} \qquad Eq.\ 111\text{-}8$$

12.9.2 Determine the average polonium-210 emission rate from the stack, R_S, by taking the sum of the measured emission rates for all runs, and dividing by the number of runs performed.

12.9.3 Repeat steps 12.9.1 and 12.9.2 for each stack of each calciner.

12.10 Emission Rate from Each Source. Determine the total polonium-210 emission rate, X_k, from each source, k, by taking the sum of the average emission rates from all stacks to which the source exhausts.

12.11 Annual Polonium-210 Emission Rate from Entire Facility. Determine the annual elemental phosphorus plant emissions of polonium-210, S, using Eq. 111–9.

$$S = \frac{\sum_{k=1}^{n}\left(X_k M_k\right)}{n} \qquad Eq.\ 111\text{-}9$$

13.0 Method Performance.[Reserved]

14.0 Pollution Prevention.[Reserved]

15.0 Waste Management.[Reserved]

16.0 References

1. Blanchard, R.L. “Rapid Determination of Lead-210 and Polonium-210 in Environmental Samples by Deposition on Nickel.” Anal. Chem., *38* :189, pp. 189–192. February 1966.

17.0 Tables, Diagrams, Flowcharts, and Validation Data[Reserved]

Method 114—Test Methods for Measuring Radionuclide Emissions from Stationary Sources

1. *Purpose and Background*

This method provides the requirements for: (1) Stack monitoring and sample collection methods appropriate for radionuclides; (2) radiochemical methods which are used in determining the amounts of radionuclides collected by the stack sampling and; (3) quality assurance methods which are conducted in conjunction with these measurements. These methods are appropriate for emissions for stationary sources. A list of references is provided.

Many different types of facilities release radionuclides into air. These radionuclides differ in the chemical and physical forms, half-lives and type of radiation emitted. The appropriate combination of sample extraction, collection and analysis for an individual radionuclide is dependent upon many interrelated factors including the mixture of other radionuclides present. Because of this wide range of conditions, no single method for monitoring or sample collection and analysis of a radionuclide is applicable to all types of facilities. Therefore, a series of methods based on “principles of measurement” are described for monitoring and sample collection and analysis which are applicable to the measurement of radionuclides found in effluent streams at stationary sources. This approach provides the user with the flexibility to choose the most appropriate combination of monitoring and sample collection and analysis methods which are applicable to the effluent stream to be measured.

2. *Stack Monitoring and Sample Collection Methods*

Monitoring and sample collection methods are described based on “principles of monitoring and sample collection” which are applicable to the measurement of radionuclides from effluent streams at stationary sources. Radionuclides of most elements will be in the particulate form in these effluent streams and can be readily collected using a suitable filter media. Radionuclides of hydrogen, oxygen, carbon, nitrogen, the noble gases and in some circumstances iodine will be in the gaseous form. Radionuclides of these elements will require either the use of an in-line or off-line monitor to directly measure the radionuclides, or suitable sorbers, condensers or bubblers to collect the radionuclides.

2.1 Radionuclides as Particulates. The extracted effluent stream is passed through a filter media to remove the particulates. The filter must have a high efficiency for removal of sub-micron particles. The guidance in ANSI/HPS N13.1–1999 (section 6.6.2 Filter media) shall be followed in using filter media to collect particulates (incorporated by reference—see §61.18 of this part).

2.2 Radionuclides as Gases.

2.2.1 The Radionuclide Tritium (H–3). Tritium in the form of water vapor is collected from the extracted effluent sample by sorption, condensation or dissolution techniques. Appropriate collectors may include silica gel, molecular sieves, and ethylene glycol or water bubblers.

Tritium in the gaseous form may be measured directly in the sample stream using Method B–1, collected as a gas sample or may be oxidized using a metal catalyst to tritiated water and collected as described above.

2.2.2 Radionuclides of Iodine. Iodine is collected from an extracted sample by sorption or dissolution techniques. Appropriate collectors may include charcoal, impregnated charcoal, metal zeolite and caustic solutions.

2.2.3 Radionuclides of Argon, Krypton and Xenon. Radionuclides of these elements are either measured directly by an in-line or off-line monitor, or are collected from the extracted sample by low temperature sorption techniques, Appropriate sorbers may include charcoal or metal zeolite.

2.2.4 Radionuclides of Oxygen, Carbon, Nitrogen and Radon. Radionuclides of these elements are measured directly using an in-line or off-line monitor. Radionuclides of carbon in the form of carbon dioxide may be collected by dissolution in caustic solutions.

2.3 Definition of Terms

In-line monitor means a continuous measurement system in which the detector is placed directly in or adjacent to the effluent stream. This may involve either gross radioactivity measurements or specific radionuclide measurements. Gross measurements shall be made in conformance with the conditions specified in Methods A–4, B–2 and G–4.

Off-line monitor means a measurement system in which the detector is used to continuously measure an extracted sample of the effluent stream. This may involve either gross radioactivity measurements or specific radionuclide measurements. Gross measurements shall be made in conformance with the conditions specified in Methods A–4, B–2 and G–4.

Sample collection means a procedure in which the radionuclides are removed from an extracted sample of the effluent using a collection media. These collection media include filters, absorbers, bubblers and condensers. The collected sample is analyzed using the methods described in Section 3.

3. *Radionuclide Analysis Methods*

A series of methods based on “principles of measurement” are described which are applicable to the analysis of radionuclides collected from airborne effluent streams at stationary sources. These methods are applicable only under the conditions stated and within the limitations described. Some methods specify that only a single radionuclide be present in the sample or the chemically separated sample. This condition should be interpreted to mean that no other radionuclides are present in quantities which would interfere with the measurement.

Also identified (Table 1) are methods for a selected list of radionuclides. The listed radionuclides are those which are most commonly used and which have the greatest potential for causing dose to members of the public. Use of methods based on principles of measurement other than those described in this section must be approved in advance of use by the Administrator. For radionuclides not listed in Table 1, any of the described methods may be used provided the user can demonstrate that the applicability conditions of the method have been met.

The type of method applicable to the analysis of a radionuclide is dependent upon the type of radiation emitted, i.e., alpha, beta or gamma. Therefore, the methods described below are grouped according to principles of measurements for the analysis of alpha, beta and gamma emitting radionuclides.

3.1 Methods for Alpha Emitting Radionuclides

3.1.1 Method A–1, Radiochemistry-Alpha Spectrometry.

Principle: The element of interest is separated from other elements, and from the sample matrix using radiochemical techniques. The procedure may involve precipitation, ion exchange, or solvent extraction. Carriers (elements chemically similar to the element of interest) may be used. The element is deposited on a planchet in a very thin film by electrodeposition or by coprecipitation on a very small amount of carrier, such as lanthanum fluoride. The deposited element is then counted with an alpha spectrometer. The activity of the nuclide of interest is measured by the number of alpha counts in the appropriate energy region. A correction for chemical yield and counting efficiency is made using a standardized radioactive nuclide (tracer) of the same element. If a radioactive tracer is not available for the element of interest, a predetermined chemical yield factor may be used.

Applicability: This method is applicable for determining the activity of any alpha-emitting radionuclide, regardless of what other radionuclides are present in the sample provided the chemical separation step produces a very thin sample and removes all other radionuclides which could interfere in the spectral region of interest. APHA–605(2), ASTM–D–3972(13).

3.1.2 Method A–2, Radiochemistry-Alpha Counting.

Principle: The element of interest is separated from other elements, and from the sample matrix using radiochemistry. The procedure may involve precipitation, ion exchange, or solvent extraction. Carriers (elements chemically similar to the element of interest) may be used. The element is deposited on a planchet in a thin film and counted with an alpha counter. A correction for chemical yield (if necessary) is made. The alpha count rate measures the total activity of all emitting radionuclides of the separated element.

Applicability: This method is applicable for the measurement of any alpha-emitting radionuclide, provided no other alpha emitting radionuclide is present in the separated sample. It may also be applicable for determining compliance, when other radionuclides of the separated element are present, provided that the calculated emission rate is assigned to the radionuclide which could be present in the sample that has the highest dose conversion factor. IDO–12096(18).

3.1.3 Method A–3, Direct Alpha Spectrometry.

Principle: The sample, collected on a suitable filter, is counted directly on an alpha spectrometer. The sample must be thin enough and collected on the surface of the filter so that any absorption of alpha particle energy in the sample or the filter, which would degrade the spectrum, is minimal.

Applicability: This method is applicable to simple mixtures of alpha emitting radionuclides and only when the amount of particulates collected on the filter paper are relatively small and the alpha spectra is adequately resolved. Resolutions should be 50 keV (FWHM) or better, ASTM–D–3084(16).

3.1.4 Method A–4, Direct Alpha Counting (Gross alpha determination).

Principle: The sample, collected on a suitable filter, is counted with an alpha counter. The sample must be thin enough so that self-absorption is not significant and the filter must be of such a nature that the particles are retained on the surface.

Applicability: Gross alpha determinations may be used to measure emissions of specific radionuclides only (1) when it is known that the sample contains only a single radionuclide, or the identity and isotopic ratio of the radionuclides in the sample are well-known, and (2) measurements using either Method A–1, A–2 or A–5 have shown that this method provides a reasonably accurate measurement of the emission rate. Gross alpha measurements are

applicable to unidentified mixtures of radionuclides only for the purposes and under the conditions described in section 3.7. APHA–601(3), ASTM–D–1943(10).

3.1.5 Method A–5, Chemical Determination of Uranium.

Principle: Uranium may be measured chemically by either colorimetry or fluorometry. In both procedures, the sample is dissolved, the uranium is oxidized to the hexavalent form and extracted into a suitable solvent. Impurities are removed from the solvent layer. For colorimetry, dibenzoylmethane is added, and the uranium is measured by the absorbance in a colorimeter. For fluorometry, a portion of the solution is fused with a sodium fluoride-lithium fluoride flux and the uranium is determined by the ultraviolet activated fluorescence of the fused disk in a fluorometer.

Applicability: This method is applicable to the measurements of emission rates of uranium when the isotopic ratio of the uranium radionuclides is well known. ASTM–E–318(15), ASTM–D–2907(14).

3.1.6 Method A–6, Radon-222—Continuous Gas Monitor.

Principle: Radon-222 is measured directly in a continuously extracted sample stream by passing the air stream through a calibrated scintillation cell. Prior to the scintillation cell, the air stream is treated to remove particulates and excess moisture. The alpha particles from radon-222 and its decay products strike a zinc sulfide coating on the inside of the scintillation cell producing light pulses. The light pulses are detected by a photomultiplier tube which generates electrical pulses. These pulses are processed by the system electronics and the read out is in pCi/l of radon-222.

Applicability: This method is applicable to the measurement of radon-222 in effluent streams which do not contain significant quantities of radon-220. Users of this method should calibrate the monitor in a radon calibration chamber at least twice per year. The background of the monitor should also be checked periodically by operating the instrument in a low radon environment. EPA 520/1–89–009(24).

3.1.7 Method A–7, Radon-222-Alpha Track Detectors

Principle: Radon-222 is measured directly in the effluent stream using alpha track detectors (ATD). The alpha particles emitted by radon-222 and its decay products strike a small plastic strip and produce submicron damage tracks. The plastic strip is placed in a caustic solution that accentuates the damage tracks which are counted using a microscope or automatic counting system. The number of tracks per unit area is correlated to the radon concentration in air using a conversion factor derived from data generated in a radon calibration facility.

Applicability: Prior approval from EPA is required for use of this method. This method is only applicable to effluent streams which do not contain significant quantities of radon-220, unless special detectors are used to discriminate against radon-220. This method may be used only when ATDs have been demonstrated to produce data comparable to data obtained with Method A–6. Such data should be submitted to EPA when requesting approval for the use of this method. EPA 520/1–89–009(24).

3.2 Methods for Gaseous Beta Emitting Radionuclides.

3.2.1 Method B–1, Direct Counting in Flow-Through Ionization Chambers.

Principle: An ionization chamber containing a specific volume of gas which flows at a given flow rate through the chamber is used. The sample (effluent stream sample) acts as the counting gas for the chamber. The activity of the radionuclide is determined from the current measured in the ionization chamber.

Applicability: This method is applicable for measuring the activity of a gaseous beta-emitting radionuclide in an effluent stream that is suitable as a counting gas, when no other beta-emitting nuclides are present. DOE/EP–0096(17), NCRP–58(23).

3.2.2 Method B–2, Direct Counting With In-line or Off-line Beta Detectors.

Principle: The beta detector is placed directly in the effluent stream (in-line) or an extracted sample of the effluent stream is passed through a chamber containing a beta detector (off-line). The activities of the radionuclides present in the effluent stream are determined from the beta count rate, and a knowledge of the radionuclides present and the relationship of the gross beta count rate and the specific radionuclide concentration.

Applicability: This method is applicable only to radionuclides with maximum beta particle energies greater then 0.2 MeV. This method may be used to measure emissions of specific radionuclides only when it is known that the sample contains only a single radionuclide or the identity and isotopic ratio of the radionuclides in the effluent stream are well known. Specific radionuclide analysis of periodic grab samples may be used to identify the types and quantities of radionuclides present and to establish the relationship between specific radionuclide analyses and gross beta count rates.

This method is applicable to unidentified mixtures of gaseous radionuclides only for the purposes and under the conditions described in section 3.7.

3.3 Methods for Non-Gaseous Beta Emitting Radionuclides.

3.3.1 Method B–3, Radiochemistry-Beta Counting.

Principle: The element of interest is separated from other elements, and from the sample matrix by radiochemistry. This may involve precipitation, distillation, ion exchange, or solvent extraction. Carriers (elements chemically similar to the element of interest) may be used. The element is deposited on a planchet, and counted with a beta counter. Corrections for chemical yield, and decay (if necessary) are made. The beta count rate determines the total activity of all radionuclides of the separated element. This method may also involve the radiochemical separation and counting of a daughter element, after a suitable period of ingrowth, in which case it is specific for the parent nuclide.

Applicability: This method is applicable for measuring the activity of any beta-emitting radionuclide, with a maximum energy greater than 0.2 MeV, provided no other radionuclide is present in the separated sample. APHA–608(5).

3.3.2 Method B–4, Direct Beta Counting (Gross beta determination).

Principle: The sample, collected on a suitable filter, is counted with a beta counter. The sample must be thin enough so that self-absorption corrections can be made.

Applicability: Gross beta measurements are applicable only to radionuclides with maximum beta particle energies greater than 0.2 MeV. Gross beta measurements may be used to measure emissions of specific radionuclides only (1) when it is known that the sample contains only a single radionuclide, and (2) measurements made using Method B–3 show reasonable agreement with the gross beta measurement. Gross beta measurements are applicable to mixtures of radionuclides only for the purposes and under the conditions described in section 3.7. APHA–602(4), ASTM–D–1890(11).

3.3.3 Method B–5, Liquid Scintillation Spectrometry.

Principle: An aliquot of a collected sample or the result of some other chemical separation or processing technique is added to a liquid scintillation “cocktail” which is viewed by photomultiplier

tubes in a liquid scintillation spectrometer. The spectrometer is adjusted to establish a channel or "window" for the pulse energy appropriate to the nuclide of interest. The activity of the nuclide of interest is measured by the counting rate in the appropriate energy channel. Corrections are made for chemical yield where separations are made.

Applicability: This method is applicable to any beta-emitting nuclide when no other radionuclide is present in the sample or the separated sample provided that it can be incorporated in the scintillation cocktail. This method is also applicable for samples which contain more than one radionuclide but only when the energies of the beta particles are sufficiently separated so that they can be resolved by the spectrometer. This method is most applicable to the measurement of low-energy beta emitters such as tritium and carbon-14. APHA–609(6), EML–LV–539–17(19).

3.4 Gamma Emitting Radionuclides

3.4.1 Method G–1, High Resolution Gamma Spectrometry.

Principle: The sample is counted with a high resolution gamma detector, usually either a Ge(Li) or a high purity Ge detector, connected to a multichannel analyzer or computer. The gamma emitting radionuclides in the sample are measured from the gamma count rates in the energy regions characteristic of the individual radionuclide. Corrections are made for counts contributed by other radionuclides to the spectral regions of the radionuclides of interest. Radiochemical separations may be made prior to counting but are usually not necessary.

Applicability: This method is applicable to the measurement of any gamma emitting radionuclide with gamma energies greater than 20 keV. It can be applied to complex mixtures of radionuclides. The samples counted may be in the form of particulate filters, absorbers, liquids or gases. The method may also be applied to the analysis of gaseous gamma emitting radionuclides directly in an effluent stream by passing the stream through a chamber or cell containing the detector. ASTM–3649(9), IDO–12096(18).

3.4.2 Method G–2, Low Resolution Gamma Spectrometry.

Principle: The sample is counted with a low resolution gamma detector, a thallium activated sodium iodide crystal. The detector is coupled to a photomultiplier tube and connected to a multichannel analyzer. The gamma emitting radionuclides in the sample are measured from the gamma count rates in the energy regions characteristic of the individual radionuclides. Corrections are made for counts contributed by other radionuclides to the spectral regions of the radionuclides of interest. Radiochemical separation may be used prior to counting to obtain less complex gamma spectra if needed.

Applicability: This method is applicable to the measurement of gamma emitting radionuclides with energies greater than 100 keV. It can be applied only to relatively simple mixtures of gamma emitting radionuclides. The samples counted may be in the form of particulate filters, absorbers, liquids or gas. The method can be applied to the analysis of gaseous radionuclides directly in an effluent stream by passing the gas stream through a chamber or cell containing the detector. ASTM–D–2459(12), EMSL–LV–0539–17(19).

3.4.3 Method G–3, Single Channel Gamma Spectrometry.

Principle: The sample is counted with a thallium activated sodium iodide crystal. The detector is coupled to a photomultiplier tube connected to a single channel analyzer. The activity of a gamma emitting radionuclide is determined from the gamma counts in the energy range for which the counter is set.

Applicability: This method is applicable to the measurement of a single gamma emitting radionuclide. It is not applicable to mixtures of radionuclides. The samples counted may be in the form of particulate filters, absorbers, liquids or gas. The method can be applied to the analysis of

gaseous radionuclides directly in an effluent stream by passing the gas stream through a chamber or cell containing the detector.

3.4.4 Method G–4, Gross Gamma Counting.

Principle: The sample is counted with a gamma detector usually a thallium activated sodium iodine crystal. The detector is coupled to a photomultiplier tube and gamma rays above a specific threshold energy level are counted.

Applicability: Gross gamma measurements may be used to measure emissions of specific radionuclides only when it is known that the sample contains a single radionuclide or the identity and isotopic ratio of the radionuclides in the effluent stream are well known. When gross gamma measurements are used to determine emissions of specific radionuclides periodic measurements using Methods G–1 or G–2 should be made to demonstrate that the gross gamma measurements provide reliable emission data. This method may be applied to analysis of gaseous radionuclides directly in an effluent stream by placing the detector directly in or adjacent to the effluent stream or passing an extracted sample of the effluent stream through a chamber or cell containing the detector.

3.5 Counting Methods. All of the above methods with the exception of Method A–5 involve counting the radiation emitted by the radionuclide. Counting methods applicable to the measurement of alpha, beta and gamma radiations are listed below. The equipment needed and the counting principles involved are described in detail in ASTM–3648(8).

3.5.1 Alpha Counting:

• *Gas Flow Proportional Counters.* The alpha particles cause ionization in the counting gas and the resulting electrical pulses are counted. These counters may be windowless or have very thin windows.

• *Scintillation Counters.* The alpha particles transfer energy to a scintillator resulting in a production of light photons which strike a photomultiplier tube converting the light photons to electrical pulses which are counted. The counters may involve the use of solid scintillation materials such as zinc sulfide or liquid scintillation solutions.

• *Solid-State Counters.* Semiconductor materials, such as silicon surface-barrier p-n junctions, act as solid ionization chambers. The alpha particles interact which the detector producing electron hole pairs. The charged pair is collected by an applied electrical field and the resulting electrical pulses are counted.

• *Alpha Spectrometers.* Semiconductor detectors used in conjunction with multichannel analyzers for energy discrimination.

3.5.2 Beta Counting:

• *Ionization Chambers.* These chambers contain the beta-emitting nuclide in gaseous form. The ionization current produced is measured.

• *Geiger-Muller (GM) Counters-or Gas Flow Proportional Counters.* The beta particles cause ionization in the counting gas and the resulting electrical pulses are counted. Proportional gas flow counters which are heavily shielded by lead or other metal, and provided with an anti-coincidence shield to reject cosmic rays, are called low background beta counters.

• *Scintillation Counters.* The beta particles transfer energy to a scintillator resulting in a production of light photons, which strike a photomultiplier tube converting the light photon to electrical pulses which are counted. This may involve the use of anthracene crystals, plastic scintillator, or liquid scintillation solutions with organic phosphors.

• *Liquid Scintillation Spectrometers.* Liquid scintillation counters which use two photomultiplier tubes in coincidence to reduce background counts. This counter may also electronically discriminate among pulses of a given range of energy.

3.5.3 Gamma Counting:

• *Low-Resolution Gamma Spectrometers.* The gamma rays interact with thallium activated sodium iodide or cesium iodide crystal resulting in the release of light photons which strike a photomultiplier tube converting the light pulses to electrical pulses proportional to the energy of the gamma ray. Multi-channel analyzers are used to separate and store the pulses according to the energy absorbed in the crystal.

• *High-Resolution gamma Spectrometers.* Gamma rays interact with a lithium-drifted (Ge(Li)) or high-purity germanium (HPGe) semiconductor detectors resulting in a production of electron-hole pairs. The charged pair is collected by an applied electrical field. A very stable low noise preamplifier amplifies the pulses of electrical charge resulting from the gamma photon interactions. Multichannel analyzers or computers are used to separate and store the pulses according to the energy absorbed in the crystal.

• *Single Channel Analyzers.* Thallium activated sodium iodide crystals used with a single window analyzer. Pulses from the photomultiplier tubes are separated in a single predetermined energy range.

3.5.4 Calibration of Counters. Counters are calibrated for specific radionuclide measurements using a standard of the radionuclide under either identical or very similar conditions as the sample to be counted. For gamma spectrometers a series of standards covering the energy range of interest may be used to construct a calibration curve relating gamma energy to counting efficiency.

In those cases where a standard is not available for a radionuclide, counters may be calibrated using a standard with energy characteristics as similar as possible to the radionuclide to be measured. For gross alpha and beta measurements of the unidentified mixtures of radionuclides, alpha counters are calibrated with a natural uranium standard and beta counters with a cesium-137 standard. The standard must contain the same weight and distribution of solids as the samples, and be mounted in an identical manner. If the samples contain variable amounts of solids, calibration curves relating weight of solids present to counting efficiency are prepared. Standards other than those prescribed may be used provided it can be shown that such standards are more applicable to the radionuclide mixture measured.

3.6 Radiochemical Methods for Selected Radionuclides. Methods for a selected list of radionuclides are listed in Table 1. The radionuclides listed are those which are most commonly used and which have the greatest potential for causing doses to members of the public. For radionuclides not listed in Table 1, methods based on any of the applicable “principles of measurement” described in section 3.1 through 3.4 may be used.

3.7 Applicability of Gross Alpha and Beta Measurements to Unidentified Mixtures of Radionuclides. Gross alpha and beta measurements may be used as a screening measurement as a part of an emission measurement program to identify the need to do specific radionuclide analyses or to confirm or verify that unexpected radionuclides are not being released in significant quantities.

Gross alpha (Method A–4) or gross beta (Methods B–2 or B–4) measurements may also be used for the purpose of comparing the measured concentrations in the effluent stream with the limiting “Concentration Levels for Environmental Compliance” in table 2 of appendix E. For unidentified mixtures, the measured concentration value shall be compared with the lowest environmental concentration limit for any radionuclide which is not known to be absent from the effluent stream.

Table 1—List of Approved Methods for Specific Radionuclides

Radionuclide	Approved methods of analysis
Am-241	A–1, A–2, A–3, A–4
Ar-41	B–1,B–2,G–1,G–2, G–3, G–4
Ba-140	G–1, G–2, G–3, G–4
Br-82	G–1, G–2, G–3, G–4
C-11	B–1,B–2,G–1,G–2,G–3, G–4
C-14	B–5
Ca-45	B–3, B–4, B–5
Ce-144	G–1, G–2, G–3, G–4
Cm-244	A–1, A–2, A–3, A–4
Co-60	G–1, G–2, G–3, G–4
Cr-51	G–1, G–2, G–3, G–4
Cs-134	G–1, G–2, G–3, G–4
Cs-137	G–1, G–2, G–3, G–4
Fe-55	B–5, G–1
Fe-59	G–1, G–2, G–3, G–4
Ga-67	G–1, G–2, G–3, G–4
H-3 (H_2O)	B–5
H-3 (gas)	B–1
I-123	G–1, G–2, G–3, G–4
I-125	G–1
I-131	G–1, G–2, G–3, G–4
In-113m	G–1, G–2, G–3, G–4
Ir-192	G–1, G–2, G–3, G–4
Kr-85	B–1, B–2, B–5, G–1, G–2, G–3, G–4
Kr-87	B–1, B–2, G–1, G–2, G–3, G–4
Kr-88	B–1, B–2, G–1, G–2, G–3, G–4
Mn-54	G–1, G–2, G–3, G–4
Mo-99	G–1, G–2, G–3, G–4
N-13	B–1, B–2, G–1, G–2, G–3, G–4
O-15	B–1, B–2, G–1, G–2, G–3, G–4
P-32	B–3, B–4, B–5

Pm-147	B–3, B–4, B–5
Po-210	A–1, A–2, A–3, A–4
Pu-238	A–1, A–2, A–3, A–4
Pu-239	A–1, A–2, A–3, A–4
Pu-240	A–1, A–2, A–3, A–4
Ra–226	A–1, A–2, G–1, G–2
S-35	B–5
Se-75	G–1, G–2, G–3, G–4
Sr-90	B–3, B–4, B–5
Tc-99	B–3, B–4, B–5
Te-201	G–1, G–2, G–3, G–4
Uranium (total alpha)	A–1, A–2, A–3, A–4
Uranium (Isotopic)	A–1, A–3
Uranium (Natural)	A–5
Xe-133	G–1
Yb-169	G–1, G–2, G–3, G–4
Zn-65	G–1, G–2, G–3, G–4

4. *Quality Assurance Methods*

Each facility required to measure their radionuclide emissions shall conduct a quality assurance program in conjunction with the radionuclide emission measurements. This program shall assure that the emission measurements are representative, and are of known precision and accuracy and shall include administrative controls to assure prompt response when emission measurements indicate unexpectedly large emissions. The program shall consist of a system of policies, organizational responsibilities, written procedures, data quality specifications, audits, corrective actions and reports. This quality assurance program shall include the following program elements:

4.1 The organizational structure, functional responsibilities, levels of authority and lines of communications for all activities related to the emissions measurement program shall be identified and documented.

4.2 Administrative controls shall be prescribed to ensure prompt response in the event that emission levels increase due to unplanned operations.

4.3 The sample collection and analysis procedures used in measuring the emissions shall be described including where applicable:

4.3.1 Identification of sampling sites and number of sampling points, including the rationale for site selections.

4.3.2 A description of sampling probes and representativeness of the samples.

4.3.3 A description of any continuous monitoring system used to measure emissions, including the sensitivity of the system, calibration procedures and frequency of calibration.

4.3.4 A description of the sample collection systems for each radionuclide measured, including frequency of collection, calibration procedures and frequency of calibration.

4.3.5 A description of the laboratory analysis procedures used for each radionuclide measured, including frequency of analysis, calibration procedures and frequency of calibration.

4.3.6 A description of the sample flow rate measurement systems or procedures, including calibration procedures and frequency of calibration.

4.3.7 A description of the effluent flow rate measurement procedures, including frequency of measurements, calibration procedures and frequency of calibration.

4.4 The objectives of the quality assurance program shall be documented and shall state the required precision, accuracy and completeness of the emission measurement data including a description of the procedures used to assess these parameters. Accuracy is the degree of agreement of a measurement with a true or known value. Precision is a measure of the agreement among individual measurements of the same parameters under similar conditions. Completeness is a measure of the amount of valid data obtained compared to the amount expected under normal conditions.

4.5 A quality control program shall be established to evaluate and track the quality of the emissions measurement data against preset criteria. The program should include where applicable a system of replicates, spiked samples, split samples, blanks and control charts. The number and frequency of such quality control checks shall be identified.

4.6 A sample tracking system shall be established to provide for positive identification of samples and data through all phases of the sample collection, analysis and reporting system. Sample handling and preservation procedures shall be established to maintain the integrity of samples during collection, storage and analysis.

4.7 Regular maintenance, calibration and field checks shall be performed for each sampling system in use by satisfying the requirements found in Table 2: Maintenance, Calibration and Field Check Requirements.

Table 2—Maintenance, Calibration and Field Check Requirements

Sampling system components	Frequency of activity
Cleaning of thermal anemometer elements	As required by application.
Inspect pitot tubes for contaminant deposits	At least annually.
Inspect pitot tube systems for leaks	At least annually.
Inspect sharp-edged nozzles for damage	At least annually or after maintenance that could cause damage.
Check nozzles for alignment, presence of deposits, or other potentially degrading factors	Annually.

Sampling system components	Frequency of activity
Check transport lines of HEPA-filtered applications to determine if cleaning is required	Annually.
Clean transport lines	Visible deposits for HEPA-filtered applications. Mean mass of deposited material exceeds 1g/m^{2}for other applications.
Inspect or test the sample transport system for leaks	At least annually.
Check mass flow meters of sampling systems with a secondary or transfer standard	At least quarterly.
Inspect rotameters of sampling systems for presence of foreign matter	At the start of each sampling period.
Check response of stack flow rate systems	At least quarterly.
Calibration of flow meters of sampling systems	At least annually.
Calibration of effluent flow measurement devices	At least annually.
Calibration of timing devices	At least annually.

4.8 Periodic internal and external audits shall be performed to monitor compliance with the quality assurance program. These audits shall be performed in accordance with written procedures and conducted by personnel who do not have responsibility for performing any of the operations being audited.

4.9 A corrective action program shall be established including criteria for when corrective action is needed, what corrective actions will be taken and who is responsible for taking the corrective action.

4.10 Periodic reports to responsible management shall be prepared on the performance of the emissions measurements program. These reports should include assessment of the quality of the data, results of audits and description of corrective actions.

4.11 The quality assurance program should be documented in a quality assurance project plan that should address each of the above requirements.

5. *References*

(1) American National Standards Institute “Guide to Sampling Airborne Radioactive Materials in Nuclear Facilities”, ANSI–N13.1–1969, American National Standards Institute, New York, New

York (1969).

(2) American Public Health Association, “Methods of Air Sampling”, 2nd Edition, Method 605, “Tentative Method of Analysis for Plutonium Content of Atmospheric Particulate Matter”. American Public Health Association, New York, NY (1977).

(3) Ibid, Method 601, “Tentative Method of Analysis for Gross Alpha Radioactivity Content of the Atmosphere”.

(4) Ibid, Method 602, “Tentative Method of the Analysis for Gross Beta Radioactivity Content of the Atmosphere”.

(5) Ibid, Method 608, “Tentative Method of Analysis for Strontium-90 Content of Atmospheric Particulate Matter”.

(6) Ibid, Method 609, “Tentative Method of Analysis for Tritium Content of the Atmosphere”.

(7) Ibid, Method 603, “Tentative Method of Analysis for Iodine-131 Content of the Atmosphere”.

(8) American Society for Testing and Materials, 1986 Annual Book ASTM Standards, Designation D–3648–78, “Standard Practices for the Measurement of Radioactivity”. American Society for Testing and Materials, Philadelphia, PA (1986).

(9) Ibid, Designation D–3649–85, “Standard Practice for High Resolution Gamma Spectrometry”.

(10) Ibid, Designation D–1943–81, “Standard Test Method for Alpha Particle Radioactivity of Water”.

(11) Ibid, Designation D–1890–81, “Standard Test Method for Beta Particle Radioactivity of Water”.

(12) Ibid, Designation D–2459–72, “Standard Test Method for Gamma Spectrometry of Water”.

(13) Ibid, Designation D–3972–82, “Standard Test Method for Isotopic Uranium in Water by Radiochemistry”.

(14) Ibid, Designation D–2907–83, “Standard Test Methods for Microquantities of Uranium in Water by Fluorometry”.

(15) Ibid, Designation E–318, “Standard Test Method for Uranium in Aqueous Solutions by Colorimetry”.

(16) Ibid, Designation D–3084–75, “Standard Practice for Alpha Spectrometry of Water”.

(17) Corley, J.P. and C.D. Corbit, “A Guide for Effluent Radiological Measurements at DOE Installations”, DOE/EP–0096, Pacific Northwest Laboratories, Richland, Washington (1983).

(18) Department of Energy, “RESL Analytical Chemistry Branch Procedures Manual”, IDO–12096, U.S. Department of Energy, Idaho Falls, Idaho (1982).

(19) Environmental Protection Agency, “Radiochemical Analytical Procedures for Analysis of Environmental Samples”, EMSL–LV–0539–17, U.S. Environmental Protection Agency, Environmental Monitoring and Support Laboratory, Las Vegas, Nevada (1979).

(20) Environmental Protection Agency, “Radiochemistry Procedures Manual”, EPA 520/5–84–006, Eastern Environmental Radiation Facility, Montgomery, Alabama (1984).

(21) National Council on Radiation Protection and Measurements, NCRP Report No. 50,

"Environmental Radiation Measurements", National Council on Radiation Protection and Measurement, Bethesda, Maryland (1976).

(22) Ibid, Report No. 47, "Tritium Measurement Techniques". (1976).

(23) Ibid, Report No. 58 "A Handbook of Radioactivity Measurement Procedures" (1985).

(24) Environmental Protection Agency, "Indoor Radon and Radon Decay Product Measurement Protocols", EPA 520/1–89–009, U.S. Environmental Protection Agency, Washington, DC (1989).

Method 115—Monitoring for Radon-222 Emissions

This appendix describes the monitoring methods which must be used in determining the radon-222 emissions from underground uranium mines, uranium mill tailings piles, phosphogypsum stacks, and other piles of waste material emitting radon.

1. *Radon-222 Emissions from Underground Uranium Mine Vents*

1.1 Sampling Frequency and Calculation of Emissions. Radon-222 emissions from underground uranium mine vents shall be determined using one of the following methods:

1.1.1 Continuous Measurement. These measurements shall be made and the emissions calculated as follows:

(a) The radon-222 concentration shall be continuously measured at each mine vent whenever the mine ventilation system is operational.

(b) Each mine vent exhaust flow rate shall be measured at least 4 times per year.

(c) A weekly radon-222 emission rate for the mine shall be calculated and recorded weekly as follows:

$A_w = C_1Q_1T_1 + C_2Q_2T_2 + \ldots C_iQ_iT_i$

Where:

A_w=Total radon-222 emitted from the mine during week (Ci)

C_i=Average radon-222 concentration in mine vent i(Ci/m^3)

Q_i=Volumetric flow rate from mine vent i(m^3 /hr)

T_i=Hours of mine ventilation system operation during week for mine vent i(hr)

(d) The annual radon-222 emission rate is the sum of the weekly emission rates during a calendar year.

1.1.2 Periodic Measurement. This method is applicable only to mines that continuously operate their ventilation system except for extended shutdowns. Mines which start up and shut down their ventilation system frequently must use the continuous measurement method describe in Section 1.1.1 above. Emission rates determined using periodic measurements shall be measured and calculated as follows:

(a) The radon-222 shall be continuously measured at each mine vent for at least one week every three months.

(b) Each mine vent exhaust flow rate shall be measured at least once during each of the radon-222 measurement periods.

(c) A weekly radon-222 emission rate shall be calculated for each weekly period according to the method described in Section 1.1.1. In this calculation T=168 hr.

(d) The annual radon-222 emission rate from the mine should be calculated as follows:

$$A_y = \frac{52 - W_s}{n} \left(A_{w1} + A_{w2} + \cdots A_{wi} \right)$$

Where:

A_y=Annual radon-222 emission rate from the mine(Ci)

A_{wi}=Weekly radon-222 emission rate during the measurement period i (Ci)

n=Number of weekly measurement periods per year

W_s=Number of weeks during the year that the mine ventilation system is shut down in excess of 7 consecutive days, i.e. the sum of the number of weeks each shut down exceeds 7 days

1.2 Test Methods and Procedures

Each underground mine required to test its emissions, unless an equivalent or alternative method has been approved by the Administrator, shall use the following test methods:

1.2.1 Test Method 1 of appendix A to part 60 shall be used to determine velocity traverses. The sampling point in the duct shall be either the centroid of the cross section or the point of average velocity.

1.2.2 Test Method 2 of appendix A to part 60 shall be used to determine velocity and volumetric flow rates.

1.2.3 Test Methods A–6 or A–7 of appendix B, Method 114 to part 61 shall be used for the analysis of radon–222. Use of Method A–7 requires prior approval of EPA based on conditions described in appendix B.

1.2.4 A quality assurance program shall be conducted in conformance with the programs described for Continuous Radon Monitors and Alpha Track Detectors in EPA 520/1–89–009. (2)

2. *Radon–222 Emissions from Uranium Mill Tailings Piles*

2.1 Measurement and Calculation of Radon Flux from Uranium Mill Tailings Piles.

2.1.1 Frequency of Flux Measurement. A single set of radon flux measurements may be made, or if the owner or operator chooses, more frequent measurements may be made over a one year period. These measurements may involve quarterly, monthly or weekly intervals. All radon measurements shall be made as described in paragraphs 2.1.2 through 2.1.6 except that for measurements made over a one year period, the requirement of paragraph 2.1.4(c) shall not apply. The mean radon flux from the pile shall be the arithmetic mean of the mean radon flux for each measurement period. The weather conditions, moisture content of the tailings and area of the pile covered by water existing at the time of the measurement shall be chosen so as to provide measurements representative of the long term radon flux from the pile and shall be subject to EPA review and approval.

2.1.2 Distribution of Flux Measurements. The distribution and number of radon flux measurements required on a pile will depend on clearly defined areas of the pile (called regions) that can have significantly different radon fluxes due to surface conditions. The mean radon flux shall be determined for each individual region of the pile. Regions that shall be considered for

operating mill tailings piles are:

(a) Water covered areas,

(b) Water saturated areas (beaches),

(c) Dry top surface areas, and

(d) Sides, except where earthen material is used in dam construction.

For mill tailings after disposal the pile shall be considered to consist of only one region.

2.1.3 Number of Flux Measurements. Radon flux measurements shall be made within each region on the pile, except for those areas covered with water. Measurements shall be made at regularly spaced locations across the surface of the region, realizing that surface roughness will prohibit measurements in some areas of a region. The minimum number of flux measurements considered necessary to determine a representative mean radon flux value for each type of region on an operating pile is:

(a) Water covered area—no measurements required as radon flux is assumed to be zero,

(b) Water saturated beaches—100 radon flux measurements,

(c) Loose and dry top surface—100 radon flux measurements,

(d) Sides—100 radon flux measurements, except where earthern material is used in dam construction.

For a mill tailings pile after disposal which consists of only one region a minimum of 100 measurements are required.

2.1.4 Restrictions to Radon Flux Measurements. The following restrictions are placed on making radon flux measurements:

(a) Measurements shall not be initiated within 24 hours of a rainfall.

(b) If a rainfall occurs during the 24 hour measurements period, the measurement is invalid if the seal around the lip of the collector has washed away or if the collector is surrounded by water.

(c) Measurements shall not be performed if the ambient temperature is below 35 °F or if the ground is frozen.

2.1.5 Areas of Pile Regions. The approximate area of each region of the pile shall be determined in units of square meters.

2.1.6 Radon Flux Measurement. Measuring radon flux involves the adsorption of radon on activated charcoal in a large-area collector. The radon collector is placed on the surface of the pile area to be measured and allowed to collect radon for a time period of 24 hours. The radon collected on the charcoal is measured by gamma-ray spectroscopy. The detailed measurement procedure provided in appendix A of EPA 520/5–85–0029(1) shall be used to measure the radon flux on uranium mill tailings, except the surface of the tailings shall not be penetrated by the lip of the radon collector as directed in the procedure, rather the collector shall be carefully positioned on a flat surface with soil or tailings used to seal the edge.

2.1.7 Calculations. The mean radon flux for each region of the pile and for the total pile shall be calculated and reported as follows:

(a) The individual radon flux calculations shall be made as provided in appendix A EPA 86 (1).

The mean radon flux for each region of the pile shall be calculated by summing all individual flux measurements for the region and dividing by the total number of flux measurements for the region.

(b) The mean radon flux for the total uranium mill tailings pile shall be calculated as follows.

$$J_s = \frac{J_1 A_1 + \cdots J_2 A_2 \cdots J_i A_i}{A_t}$$

Where:

J_s=Mean flux for the total pile (pCi/m^2 -s)

J_i=Mean flux measured in region i (pCi/m^2 -s)

A_i=Area of region i (m^2)

A_t=Total area of the pile (m^2)

2.1.8 Reporting. The results of individual flux measurements, the approximate locations on the pile, and the mean radon flux for each region and the mean radon flux for the total stack shall be included in the emission test report. Any condition or unusual event that occurred during the measurements that could significantly affect the results should be reported.

3.0 Radon-222 Emissions from Phosphogypsum Stacks.

3.1 Measurement and Calculation of the Mean Radon Flux. Radon flux measurements shall be made on phosphogypsum stacks as described below:

3.1.1 Frequency of Measurements. A single set of radon flux measurements may be made after the phosphogypsum stack becomes inactive, or if the owner or operator chooses, more frequent measurements may be made over a one year period. These measurements may involve quarterly, monthly or weekly intervals. All radon measurements shall be made as described in paragraphs 3.1.2 through 3.1.6 except that for measurements made over a one year period, the requirement of paragraph 3.1.4(c) shall not apply. For measurements made over a one year period, the radon flux shall be the arithmetic mean of the mean radon flux for each measurement period.

3.1.2 Distribution and Number of Flux Measurements. The distribution and number of radon flux measurements required on a stack will depend on clearly defined areas of the stack (called regions) that can have significantly different radon fluxes due to surface conditions. The mean radon flux shall be determined for each individual region of the stack. Regions that shall be considered are:

(a) Water covered areas,

(b) Water saturated areas (beaches),

(c) Loose and dry top surface areas,

(d) Hard-packed roadways, and

(e) Sides.

3.1.3 Number of Flux Measurements. Radon flux measurements shall be made within each region on the phosphogypsum stack, except for those areas covered with water. Measurements shall be made at regularly spaced locations across the surface of the region, realizing that

surface roughness will prohibit measurements in some areas of a region. The minimum number of flux measurements considered necessary to determine a representative mean radon flux value for each type of region is:

(a) Water covered area—no measurements required as radon flux is assumed to be zero,

(b) Water saturated beaches—50 radon flux measurements,

(c) Loose and dry top surface—100 radon flux measurements,

(d) Hard-packed roadways—50 radon flux measurements, and

(e) Sides—100 radon flux measurements.

A minimum of 300 measurements are required. A stack that has no water cover can be considered to consist of two regions, top and sides, and will require a minimum of only 200 measurements.

3.1.4 Restrictions to Radon Flux Measurements. The following restrictions are placed on making radon flux measurements:

(a) Measurements shall not be initiated within 24 hours of a rainfall.

(b) If a rainfall occurs during the 24 hour measurement period, the measurement is invalid if the seal around the lip of the collector has washed away or if the collector is surrounded by water.

(c) Measurements shall not be performed if the ambient temperature is below 35 °F or if the ground is frozen.

3.1.5 Areas of Stack Regions. The approximate area of each region of the stack shall be determined in units of square meters.

3.1.6 Radon Flux Measurements. Measuring radon flux involves the adsorption of radon on activated charcoal in a large-area collector. The radon collector is placed on the surface of the stack area to be measured and allowed to collect radon for a time period of 24 hours. The radon collected on the charcoal is measured by gamma-ray spectroscopy. The detailed measurement procedure provided in appendix A of EPA 520/5–85–0029(1) shall be used to measure the radon flux on phosphogypsum stacks, except the surface of the phosphogypsum shall not be penetrated by the lip of the radon collector as directed in the procedure, rather the collector shall be carefully positioned on a flat surface with soil or phosphogypsum used to seal the edge.

3.1.7 Calculations. The mean radon flux for each region of the phosphogypsum stack and for the total stack shall be calculated and reported as follows:

(a) The individual radon flux calculations shall be made as provided in appendix A EPA 86 (1). The mean radon flux for each region of the stack shall be calculated by summing all individual flux measurements for the region and dividing by the total number of flux measurements for the region.

(b) The mean radon flux for the total phosphogypsum stack shall be calculated as follows.

$$J_s = \frac{J_1 A_1 + J_2 A_2 + \cdots J_i A_i}{A_t}$$

Where:

J_s=Mean flux for the total stack (pCi/m^2 -s)

J_i=Mean flux measured in region i (pCi/m^2 -s)

A_i=Area of region i (m^2)

A_t=Total area of the stack

3.1.8 Reporting. The results of individual flux measurements, the approximate locations on the stack, and the mean radon flux for each region and the mean radon flux for the total stack shall be included in the emission test report. Any condition or unusual event that occurred during the measurements that could significantly affect the results should be reported.

4.0 Quality Assurance Procedures for Measuring Rn–222 Flux

A. Sampling Procedures

Records of field activities and laboratory measurements shall be maintained. The following information shall be recorded for each charcoal canister measurement:

(a) Site

(b) Name of pile

(c) Sample location

(d) Sample ID number

(e) Date and time on

(f) Date and time off

(g) Observations of meteorological conditions and comments

Records shall include all applicable information associated with determining the sample measurement, calculations, observations, and comments.

B. Sample Custody

Custodial control of all charcoal samples exposed in the field shall be maintained in accordance with EPA chain-of-custody field procedures. A control record shall document all custody changes that occur between the field and laboratory personnel.

C. Calibration Procedures and Frequency

The radioactivity of two standard charcoal sources, each containing a carefully determined quantity of radium-226 uniformly distributed through 180g of activated charcoal, shall be measured. An efficiency factor is computed by dividing the average measured radioactivity of the two standard charcoal sources, minus the background, in cpm by the known radioactivity of the charcoal sources in dpm. The same two standard charcoal sources shall be counted at the beginning and at the end of each day's counting as a check of the radioactivity counting equipment. A background count using unexposed charcoal should also be made at the beginning and at the end of each counting day to check for inadvertent contamination of the detector or other changes affecting the background. The unexposed charcoal comprising the blank is changed with each new batch of charcoal used.

D. Internal Quality Control Checks and Frequency

The charcoal from every tenth exposed canister shall be recounted. Five percent of the samples analyzed shall be either blanks (charcoal having no radioactivity added) or samples spiked with

known quantities of radium-226.

E. Data Precision, Accuracy, and Completeness

The precision, accuracy, and completeness of measurements and analyses shall be within the following limits for samples measuring greater than 1.0 pCi/m^2 −s.

(a) Precision: 10%

(b) Accuracy: ±10%

(c) Completeness: at least 85% of the measurements must yield useable results.

5.0 References

(1) Hartley, J.N. and Freeman, H.D., “Radon Flux Measurements on Gardinier and Royster phosphogypsum Piles Near Tampa and Mulberry, Florida,” U.S. Environmental Protection Agency Report, EPA 520/5–85–029, January 1986.

(2) Environmental Protection Agency, “Indoor Radon and Radon Decay Product Measurement Protocols”, EPA 520/1–89–009, U.S. Environmental Protection Agency, Washington, DC. (1989).

[38 FR 8826, Apr. 6, 1973]

Editorial Notes: 1. ForFederal Registercitations to appendix B see the List of CFR Sections Affected, which appears in the Finding Aids section of the printed volume and on GPO Access.

2. At 65 FR 62161, Oct. 17, 2000, appendix B to part 61 was amended by revising Methods 101, 101A, 102, 103, 104, 105, 106, 107, 107A, 108, 108A, 108B, 108C, and 111. However, because the amendment contains no revised text for Method 107A, this part of the revision could not be incorporated.

Appendix C to Part 61—Quality Assurance Procedures

Procedure 1—Determination of Adequate Chromatographic Peak Resolution

In this method of dealing with resolution, the extent to which one chromatographic peak overlaps another is determined.

For convenience, consider the range of the elution curve of each compound as running from -2σ to $+2\sigma$. This range is used in other resolution criteria, and it contains 95.45 percent of the area of a normal curve. If two peaks are separated by a known distance, b, one can determine the fraction of the area of one curve that lies within the range of the other. The extent to which the elution curve of a contaminant compound overlaps the curve of a compound that is under analysis is found by integrating the contaminant curve over the limits $b-2\sigma_s$to $b+2\sigma_s$,where $\sigma_s$is the standard deviation of the sample curve.

This calculation can be simplified in several ways. Overlap can be determined for curves of unit area; then actual areas can be introduced. Desired integration can be resolved into two integrals of the normal distribution function for which there are convenient calculation programs and tables. An example would be Program 15 in Texas Instruments Program Manual ST1, 1975, Texas Instruments, Inc., Dallas, Texas 75222.

$$\frac{1}{\sqrt{2\pi}\sigma_c}\int_{b-2\sigma_s}^{b+2\sigma_s} e^{\left(\frac{-t^2}{2\sigma_c^2}\right)}dt = \frac{1}{\sqrt{2\pi}}\int_{\frac{b-2\sigma_s}{\sigma_c}}^{\infty} e^{\left(\frac{-x^2}{2}\right)}dx - \frac{1}{\sqrt{2\pi}}\int_{\frac{b+2\sigma_s}{\sigma_c}}^{\infty} e^{\left(\frac{-x^2}{2}\right)}dx$$

The following calculation steps are required:*

1. $2\sigma_s = t_s/\sqrt{2 \ln 2}$
2. $\sigma_c = t_c/2\sqrt{2 \ln 2}$
3. $x_1 = (b-2\sigma_s)/\sigma_c$
4. $x_2 = (b+2\sigma_s)/\sigma_c$
5. $Q(x_1) = \frac{1}{\sqrt{2\pi}}\int_{x_1}^{\infty} e^{\left(\frac{-x^2}{2}\right)}dx$
6. $Q(x_2) = \frac{1}{\sqrt{2\pi}}\int_{x_2}^{\infty} e^{\left(\frac{-x^2}{2}\right)}dx$
7. $I_o = Q(x_1) - Q(x_2)$
8. $A_o = I_o A_c/A_s$
9. Percentage overlap = $A_o \times 100$,

where:

A_s = Area of the sample peak of interest determined by electronic integration or by the formula $A_s = h_s t_s$.

A_c = Area of the contaminant peak, determined in the same manner as A_s.

b = Distance on the chromatographic chart that separates the maxima of the two peaks.

H_s = Peak height of the sample compound of interest, measured from the average value of the baseline to the maximum of the curve.

t_s = Width of sample peak of interest at 1/2 peak height.

t_c = Width of the contaminant peak at 1/2 of peak height.

σ_s = Standard deviation of the sample compound of interest elution curve.

σ_c = Standard deviation of the contaminant elution curve.

$Q(x_1)$ = Integral of the normal distribution function from x_1 to infinity.

$Q(x_2)$ = Integral of the normal distribution function from x_2 to infinity.

I_o = Overlap integral.

A_o = Area overlap fraction.

*In most instances, $Q(x_2)$ is very small and may be neglected.

In judging the suitability of alternate GC columns or the effects of altering chromatographic conditions, one can employ the area overlap as the resolution parameter with a specific maximum permissible value.

The use of Gaussian functions to describe chromatographic elution curves is widespread. However, some elution curves are highly asymmetric. In cases where the sample peak is followed by a contaminant that has a leading edge that rises sharply but the curve then tails off, it may be possible to define an effective width for $t_c$as “twice the distance from the leading edge to a perpendicular line through the maxim of the contaminant curve, measured along a perpendicular bisection of that line.”

Procedure 2—Procedure for Field Auditing GC Analysis

Responsibilities of audit supervisor and analyst at the source sampling site include the following:

A. The audit supervisor verifies that audit cylinders are stored in a safe location both before and after the audit to prevent vandalism.

B. At the beginning and conclusion of the audit, the analyst records each cylinder number and pressure. An audit cylinder is never analyzed when the pressure drops below 200 psi.

C. During the audit, the analyst performs a minimum of two consecutive analyses of each audit cylinder gas. The audit must be conducted to coincide with the analysis of source test samples,

normally immediately after GC calibration and prior to sample analyses.

D. At the end of audit analyses, the audit supervisor requests the calculated concentrations from the analyst and compares the results with the actual audit concentrations. If each measured concentration agrees with the respective actual concentration within ±10 percent, he directs the analyst to begin analyzing source samples. Audit supervisor judgment and/or supervisory policy determine action when agreement is not within ±10 percent. When a consistent bias in excess of 10 percent is found, it may be possible to proceed with the sample analysis, with a corrective factor to be applied to the results at a later time. However, every attempt should be made to locate the cause of the discrepancy, as it may be misleading. The audit supervisor records each cylinder number, cylinder pressure (at the end of the audit), and all calculated concentrations. The individual being audited must not under any circumstance be told actual audit concentrations until calculated concentrations have been submitted to the audit supervisor.

Field Audit Report

Part A— To be filled out by organization supplying audit cylinders.

1. Organization supplying audit sample(s) and shipping address

_____

2. Audit supervisor, organization, and phone number

_____
_____

3. Shipping instructions: Name, Address, Attention

_____
_____
_____

4. Guaranteed arrival date for cylinders_____
5. Planned shipping date for cylinders_____

6. Details on audit cylinders from last analysis

	Low conc.	**High conc.**
a. Date of last analysis		
b. Cylinder number		
c. Cylinder pressure, psi		
d. Audit gas(es)/balance gas		
e. Audit gas(es), ppm		
f. Cylinder construction		

Part B —To be filled out by audit supervisor.

1. Process sampled_____
_____
2. Audit location_____
_____
3. Name of individual audit_____
4. Audit date_____

5. Audit results:

	Low conc. cylinder	**High conc. cylinder**
a. Cylinder number		
b. Cylinder pressure before audit, psi		
c. Cylinder pressure after audit, psi		
d. Measured concentration, ppm Injection #1* Injection #2* Average		
e. Actual audit concentration, ppm (Part A, 6e)		
f. Audit accuracy:[1]		
Low Conc. Cylinder		
High Conc. Cylinder		
Percent[1]accuracy=		
Measured Conc.−Actual Conc.		
_____ ×100		
Actual Conc.		
g. Problems detected (if any)		

[1]Results of two consecutive injections that meet the sample analysis criteria of the test method.

[47 FR 39178, Sept. 7, 1982]

Appendix D to Part 61—Methods for Estimating Radionuclide Emissions

1. Purpose and Background

Facility owners or operators may estimate radionuclide emissions to the atmosphere for dose calculations instead of measuring emissions. Particulate emissions from mill tailings piles should be estimated using the procedures listed in reference re #2. All other emissions may be estimated by using the "Procedures" listed below, or using the method described in reference #1.

2. Procedure

To estimate emissions to the atmosphere:

(a) Determine the amount (in curies) used at facilities for the period under consideration. Radioactive materials in sealed packages that remain unopened, and have not leaked during the assessment period should not be included in the calculation.

(b) Multiply the amount used by the following factors which depend on the physical state of the radionuclide. They are:

(i) 1 for gases;

(ii) $10^{-3}$for liquids or particulate solids; and

(iii) $10^{-6}$for solids.

If any nuclide is heated to a temperature of 100 degrees Celsius or more, boils at a temperature of 100 degrees Celsius or less, or is intentionally dispersed into the environment, it must be considered to be a gas.

(c) If a control device is installed between the place of use and the point of release, multiply emissions from (b) by an adjustment factor. These are presented in Table 1.

Table 1—Adjustment to Emission Factors for Effluent Controls

Controls	Types of radionuclides controlled	Adjustment factor to emissions	Comments and conditions
HEPA filters	Particulates	0.01	Not applicable to gaseous radionuclides; periodic testing is prudent to ensure high removal efficiency.
Fabric filter	Particulates	0.1	Monitoring would be prudent to guard against tears in filter.
Sintered metal	Particulates	1	Insufficient data to make recommendation.
Activated carbon filters	Iodine gas	0.1	Efficiency is time dependent; monitoring is necessary to ensure effectiveness.
Douglas bags: Held one week or longer for decay	Xenon	0.5/wk	Based on xenon half-life of 5.3 days;
Douglas bags: Released within one week	Xenon	1	Provides no reduction of exposure to general public.
Venturi scrubbers	Particulates Gases	0.05 1	Although venturis may remove gases, variability in gaseous removal efficiency

Controls	Types of radionuclides controlled	Adjustment factor to emissions	Comments and conditions
			dictates adjustment factor for particulates only.
Packed bed scrubbers	Gases	0.1	Not applicable to particulates.
Electrostatic precipitators	Particulates	0.05	Not applicable for gaseous radionuclides
Xenon traps	Xenon	0.1	Efficiency is time dependent; monitoring is necessary to ensure effectiveness.
Fume hoods	All	1	Provides no reduction to general public exposures.
Vent stacks	All	1	Generally provides no reduction of exposure to general public.

References

(1) Environmental Protection Agency, “A Guide for Determining Compliance with the Clean Air Act Standards for Radionuclides Emissions from NRC-Licensed and Non-DOE Federal Facilities”, EPA 520/1–89–002, January 1989.

(2) Nuclear Regulatory Commission, “Methods for Estimating Radioactive and Toxic Airborne Source Terms for Uranium Milling Operations”, U.S. Nuclear Regulatory Commission Regulatory Guide 3.59, March 1987.

[54 FR 51711, Dec. 15, 1989]

Appendix E to Part 61—Compliance Procedures Methods for Determining Compliance With Subpart I

1. Purpose and Background

This Appendix provides simplified procedures to reduce the burden on Nuclear Regulatory Commission (NRC) licensees, and non-Department of Energy Federal facilities in determining compliance with 40 CFR part 61, subpart I. The procedures consist of a series of increasingly more stringent steps, depending on the facility's potential to exceed the standard.

First, a facility can be found in compliance if the quantity of radioactive material possessed during the year is less than that listed in a table of annual possession quantities. A facility will also be in compliance if the average annual radionuclide emission concentration is less than that listed in a table of air concentration levels. If the facility is not in compliance by these tables, it can establish compliance by estimating a dose using screening procedure developed by the National Council on Radiation Protection and Measurements with a radiological source term derived using EPA approved emission factors. These procedures are described in a “Guide for Determining Compliance with the Clean Air Act Standards for Radionuclide Emissions From NRC-Licenced and Non-DOE Federal Facilities.”

A user-friendly computer program called COMPLY has been developed to reduce the burden on the regulated community. The Agency has also prepared a “User's Guide for the COMPLY Code” to assist the regulated community in using the code, and in handling more complex situations such as multiple release points. The basis for these compliance procedures are provided in “Background Information Document: Procedures Approved for Demonstrating Compliance with

40 CFR Part 61, Subpart I". The compliance model is the highest level in the COMPLY computer code and provides for the most realistic assessment of dose by allowing the use of site-specific information.

2. Table of Annual Possession Quantity

(a) Table 1 may be used for determining if facilities are in compliance with the standard. The possession table can only be used if the following conditions are met:

(i) No person lives within 10 meters of any release point; and

(ii) No milk, meat, or vegetables are produced within 100 meters of any release point.

(b) Procedures described in Reference (1) shall be used to determine compliance or exemption from reporting by use of Table 2.

Table 1—Annual Possession Quantities for Environmental Compliance

[Annual Possession Quantities (Ci/yr)]

Radionuclide	Gaseous form*	Liquid/powder forms	Solid form*
Ac-225	9.6E−05	9.6E−02	9.6E+01
Ac-227	1.6E−07	1.6E−04	1.6E−01
Ac-228	3.4E−03	3.4E+00	3.4E+03
Ag-106	1.6E+00	1.6E+03	1.6E+06
Ag-106m	2.6E−03	2.6E+00	2.6E+03
Ag-108m	6.5E−06	6.5E−03	6.5E+00
Ag-110m	9.4E−05	9.4E−02	9.4E+01
Ag-111	6.7E−02	6.7E+01	6.7E+04
Al-26	4.0E−06	4.0E−03	4.0E+00
Am-241	2.3E−06	2.3E−03	2.3E+00
Am-242	1.8E−02	1.8E+01	1.8E+04
Am-242m	2.5E−06	2.5E−03	2.5E+00
Am-243	2.3E−06	2.3E−03	2.3E+00
Am-244	4.6E−02	4.6E+01	4.6E+04
Am-245	7.0E+00	7.0E+03	7.0E+06
Am-246	9.8E−01	9.8E+02	9.8E+05
Ar-37	1.4E+06		
Ar-41	1.4E+00		
As-72	2.9E−02	2.9E+01	2.9E+04

Radionuclide	Gaseous form*	Liquid/powder forms	Solid form*
As-73	6.0E−02	6.0E+01	6.0E+04
As-74	4.3E−03	4.3E+00	4.3E+03
As-76	8.8E−02	8.8E+01	8.8E+04
As-77	7.9E−01	7.9E+02	7.9E+05
At-211	1.0E−02	1.0E+01	1.0E+04
Au-193	4.2E−01	4.2E+02	4.2E+05
Au-194	3.5E−02	3.5E+01	3.5E+04
Au-195	3.3E−03	3.3E+00	3.3E+03
Au-198	4.6E−02	4.6E+01	4.6E+04
Au-199	1.5E−01	1.5E+02	1.5E+05
Ba-131	1.0E−02	1.0E+01	1.0E+04
Ba-133	4.9E−05	4.9E−02	4.9E+01
Ba-133m	9.3E−02	9.3E+01	9.3E+04
Ba-135m	5.8E−01	5.8E+02	5.8E+05
Ba-139	4.7E+00	4.7E+03	4.7E+06
Ba-140	2.1E−03	2.1E+00	2.1E+03
Ba-141	1.3E+00	1.3E+03	1.3E+06
Ba-142	1.1E+00	1.1E+03	1.1E+06
Be-7	2.3E−02	2.3E+01	2.3E+04
Be-10	3.0E−03	3.0E+00	3.0E+03
Bi-206	3.1E−03	3.1E+00	3.1E+03
Bi-207	8.4E−06	8.4E−03	8.4E+00
Bi-210	4.2E−03	4.2E+00	4.2E+03
Bi-212	4.7E−02	4.7E+01	4.7E+04
Bi-213	6.0E−02	6.0E+01	6.0E+04
Bi-214	1.4E−01	1.4E+02	1.4E+05
Bk-249	7.0E−04	7.0E−01	7.0E+02
Bk-250	1.0E−01	1.0E+02	1.0E+05
Br-77	7.5E−02	7.5E+01	7.5E+04
Br-80	1.2E+01	1.2E+04	1.2E+07

Radionuclide	Gaseous form*	Liquid/powder forms	Solid form*
Br-80m	1.5E+00	1.5E+03	1.5E+06
Br-82	1.6E−02	1.6E+01	1.6E+04
Br-83	9.9E+00	9.9E+03	9.9E+06
Br-84	5.6E−01	5.6E+02	5.6E+05
C-11	1.3E+00	1.3E+03	1.3E+06
C-14	2.9E−01	2.9E+02	2.9E+05
Ca-41	2.7E−02	2.7E+01	2.7E+04
Ca-45	5.8E−02	5.8E+01	5.8E+04
Ca-47	1.1E−02	1.1E+01	1.1E+04
Cd-109	5.0E−03	5.0E+00	5.0E+03
Cd-113	3.3E−04	3.3E−01	3.3E+02
Cd-113m	4.4E−04	4.4E−01	4.4E+02
Cd-115	5.4E−02	5.4E+01	5.4E+04
Cd-115m	1.0E−02	1.0E+01	1.0E+04
Cd-117	5.6E−02	5.6E+01	5.6E+04
Cd-117m	1.3E−01	1.3E+02	1.3E+05
Ce-139	2.6E−03	2.6E+00	2.6E+03
Ce-141	1.8E−02	1.8E+01	1.8E+04
Ce-143	1.0E−01	1.0E+02	1.0E+05
Ce-144	1.7E−03	1.7E+00	1.7E+03
Cf-248	2.0E−05	2.0E−02	2.0E+01
Cf-249	1.7E−06	1.7E−03	1.7E+00
Cf-250	4.0E−06	4.0E−03	4.0E+00
Cf-251	1.7E−06	1.7E−03	1.7E+00
Cf-252	6.4E−06	6.4E−03	6.4E+00
Cf-253	3.3E−04	3.3E−01	3.3E+02
Cf-254	3.6E−06	3.6E−03	3.6E+00
Cl-36	1.9E−04	1.9E−01	1.9E+02
Cl-38	6.5E−01	6.5E+02	6.5E+05
Cm-242	6.0E−05	6.0E−02	6.0E+01

Radionuclide	Gaseous form*	Liquid/powder forms	Solid form*
Cm-243	3.3E−06	3.3E−03	3.3E+00
Cm-244	4.2E−06	4.2E−03	4.2E+00
Cm-245	2.3E−06	2.3E−03	2.3E+00
Cm-246	2.3E−06	2.3E−03	2.3E+00
Cm-247	2.3E−06	2.3E−03	2.3E+00
Cm-248	6.4E−07	6.4E−04	6.4E−01
Cm-249	4.6E+00	4.6E+03	4.6E+06
Cm-250	1.1E−07	1.1E−04	1.1E−01
Co-56	2.4E−04	2.4E−01	2.4E+02
Co-57	1.6E−03	1.6E+00	1.6E+03
Co-58	9.0E−04	9.0E−01	9.0E+02
Co-58m	1.7E−01	1.7E+02	1.7E+05
Co-60	1.6E−05	1.6E−02	1.6E+01
Co-60m	4.0E+00	4.0E+03	4.0E+06
Co-61	3.8E+00	3.8E+03	3.8E+06
Cr-49	9.0E−01	9.0E+02	9.0E+05
Cr-51	6.3E−02	6.3E+01	6.3E+04
Cs-129	1.5E−01	1.5E+02	1.5E+05
Cs-131	2.8E−01	2.8E+02	2.8E+05
Cs-132	1.3E−02	1.3E+01	1.3E+04
Cs-134	5.2E−05	5.2E−02	5.2E+01
Cs-134m	3.2E−01	3.2E+02	3.2E+05
Cs-135	2.4E−02	2.4E+01	2.4E+04
Cs-136	2.1E−03	2.1E+00	2.1E+03
Cs-137	2.3E−05	2.3E−02	2.3E+01
Cs-138	4.4E−01	4.4E+02	4.4E+05
Cu-61	4.0E−01	4.0E+02	4.0E+05
Cu-64	5.2E−01	5.2E+02	5.2E+05
Cu-67	1.5E−01	1.5E+02	1.5E+05
Dy-157	4.4E−01	4.4E+02	4.4E+05

Radionuclide	Gaseous form*	Liquid/powder forms	Solid form*
Dy-165	5.6E+00	5.6E+03	5.6E+06
Dy-166	8.1E−02	8.1E+01	8.1E+04
Er-169	4.0E−01	4.0E+02	4.0E+05
Er-171	3.6E−01	3.6E+02	3.6E+05
Es-253	2.6E−04	2.6E−01	2.6E+02
Es-254	2.3E−05	2.3E−02	2.3E+01
Es-254m	1.8E−03	1.8E+00	1.8E+03
Eu-152	1.6E−05	1.6E−02	1.6E+01
Eu-152m	3.5E−01	3.5E+02	3.5E+05
Eu-154	2.0E−05	2.0E−02	2.0E+01
Eu-155	5.2E−04	5.2E−01	5.2E+02
Eu-156	3.2E−03	3.2E+00	3.2E+03
F-18	5.6E−01	5.6E+02	5.6E+05
Fe-52	4.9E−02	4.9E+01	4.9E+04
Fe-55	1.4E−01	1.4E+02	1.4E+05
Fe-59	1.3E−03	1.3E+00	1.3E+03
Fm-254	1.8E−02	1.8E+01	1.8E+04
Fm-255	4.0E−03	4.0E+00	4.0E+03
Fr-223	1.4E−01	1.4E+02	1.4E+05
Ga-66	5.6E−02	5.6E+01	5.6E+04
Ga-67	1.1E−01	1.1E+02	1.1E+05
Ga-68	7.6E−01	7.6E+02	7.6E+05
Ga-72	3.6E−02	3.6E+01	3.6E+04
Gd-152	4.4E−06	4.4E−03	4.4E+00
Gd-153	2.0E−03	2.0E+00	2.0E+03
Gd-159	6.8E−01	6.8E+02	6.8E+05
Ge-68	2.3E−04	2.3E−01	2.3E+02
Ge-71	2.6E+00	2.6E+03	2.6E+06
Ge-77	1.0E−01	1.0E+02	1.0E+05
H-3	1.5E+01	1.5E+04	1.5E+07

Radionuclide	Gaseous form*	Liquid/powder forms	Solid form*
Hf-181	2.5E−03	2.5E+00	2.5E+03
Hg-193m	9.5E−02	9.5E+01	9.5E+04
Hg-197	2.4E−01	2.4E+02	2.4E+05
Hg-197m	2.5E−01	2.5E+02	2.5E+05
Hg-203	5.2E−03	5.2E+00	5.2E+03
Ho-166	2.8E−01	2.8E+02	2.8E+05
Ho-166m	6.0E−06	6.0E−03	6.0E+00
I-123	4.9E−01	4.9E+02	4.9E+05
I-124	9.3E−03	9.3E+00	9.3E+03
I-125	6.2E−03	6.2E+00	6.2E+03
I-126	3.7E−03	3.7E+00	3.7E+03
I-128	9.3E+00	9.3E+03	9.3E+06
I-129	2.6E−04	2.6E−01	2.6E+02
I-130	4.6E−02	4.6E+01	4.6E+04
I-131	6.7E−03	6.7E+00	6.7E+03
I-132	2.0E−01	2.0E+02	2.0E+05
I-133	6.7E−02	6.7E+01	6.7E+04
I-134	3.2E−01	3.2E+02	3.2E+05
I-135	1.2E−01	1.2E+02	1.2E+05
In-111	4.9E−02	4.9E+01	4.9E+04
In-113m	2.1E+00	2.1E+03	2.1E+06
In-114m	4.9E−03	4.9E+00	4.9E+03
In-115	2.7E−04	2.7E−01	2.7E+02
In-115m	1.4E+00	1.4E+03	1.4E+06
In-116m	3.5E−01	3.5E+02	3.5E+05
In-117	1.3E+00	1.3E+03	1.3E+06
In-117m	7.6E−02	7.6E+01	7.6E+04
Ir-190	3.5E−03	3.5E+00	3.5E+03
Ir-192	9.7E−04	9.7E−01	9.7E+02
Ir-194	2.5E−01	2.5E+02	2.5E+05

Radionuclide	Gaseous form*	Liquid/powder forms	Solid form*
Ir-194m	1.5E−04	1.5E−01	1.5E+02
K-40	6.8E−05	6.8E−02	6.8E+01
K-42	2.9E−01	2.9E+02	2.9E+05
K-43	6.0E−02	6.0E+01	6.0E+04
K-44	4.9E−01	4.9E+02	4.9E+05
Kr-79	7.0E+00		
Kr-81	1.8E+02		
Kr-83m	2.0E+04		
Kr-85	8.4E+02		
Kr-85m	1.1E+01		
Kr-87	2.0E+00		
Kr-88	4.2E−01		
La-140	1.6E−02	1.6E+01	1.6E+04
La-141	1.1E+00	1.1E+03	1.1E+06
La-142	2.3E−01	2.3E+02	2.3E+05
Lu-177	1.4E−01	1.4E+02	1.4E+05
Lu-177m	3.5E−04	3.5E−01	3.5E+02
Mg-28	2.1E−02	2.1E+01	2.1E+04
Mn-52	3.5E−03	3.5E+00	3.5E+03
Mn-52m	5.2E−01	5.2E+02	5.2E+05
Mn-53	5.7E−02	5.7E+01	5.7E+04
Mn-54	2.5E−04	2.5E−01	2.5E+02
Mn-56	2.5E−01	2.5E+02	2.5E+05
Mo-93	1.5E−03	1.5E+00	1.5E+03
Mo-99**	5.7E−02	5.7E+01	5.7E+04
Mo-101	8.4E−01	8.4E+02	8.4E+05
Na-22	3.2E−05	3.2E−02	3.2E+01
Na-24	2.6E−02	2.6E+01	2.6E+04
Nb-90	2.5E−02	2.5E+01	2.5E+04
Nb-93m	1.2E−02	1.2E+01	1.2E+04

Radionuclide	Gaseous form*	Liquid/powder forms	Solid form*
Nb-94	6.0E−06	6.0E−03	6.0E+00
Nb-95	2.3E−03	2.3E+00	2.3E+03
Nb-95m	2.0E−02	2.0E+01	2.0E+04
Nb-96	2.5E−02	2.5E+01	2.5E+04
Nb-97	1.0E+00	1.0E+03	1.0E+06
Nd-147	3.0E−02	3.0E+01	3.0E+04
Nd-149	1.1E+00	1.1E+03	1.1E+06
Ni-56	2.0E−03	2.0E+00	2.0E+03
Ni-57	2.1E−02	2.1E+01	2.1E+04
Ni-59	2.2E−02	2.2E+01	2.2E+04
Ni-63	1.4E−01	1.4E+02	1.4E+05
Ni-65	7.0E−01	7.0E+02	7.0E+05
Np-235	3.0E−02	3.0E+01	3.0E+04
Np-237	1.8E−06	1.8E−03	1.8E+00
Np-238	1.9E−02	1.9E+01	1.9E+04
Np-239	1.0E−01	1.0E+02	1.0E+05
Np-240	6.5E−01	6.5E+02	6.5E+05
Np-240m	4.7E+00	4.7E+03	4.7E+06
Os-185	9.2E−04	9.2E−01	9.2E+02
Os-191m	9.0E−01	9.0E+02	9.0E+05
Os-191	3.8E−02	3.8E+01	3.8E+04
Os-193	2.9E−01	2.9E+02	2.9E+05
P-32	1.7E−02	1.7E+01	1.7E+04
P-33	1.2E−01	1.2E+02	1.2E+05
Pa-230	6.3E−04	6.3E−01	6.3E+02
Pa-231	8.3E−07	8.3E−04	8.3E−01
Pa-233	9.3E−03	9.3E+00	9.3E+03
Pa-234	9.3E−02	9.3E+01	9.3E+04
Pb-203	8.3E−02	8.3E+01	8.3E+04
Pb-205	1.2E−02	1.2E+01	1.2E+04

Radionuclide	Gaseous form*	Liquid/powder forms	Solid form*
Pb-209	1.1E+01	1.1E+04	1.1E+07
Pb-210	5.5E−05	5.5E−02	5.5E+01
Pb-211	1.2E−01	1.2E+02	1.2E+05
Pb-212	6.0E−03	6.0E+00	6.0E+03
Pb-214	1.2E−01	1.2E+02	1.2E+05
Pd-103	2.1E−01	2.1E+02	2.1E+05
Pd-107	8.2E−02	8.2E+01	8.2E+04
Pd-109	9.4E−01	9.4E+02	9.4E+05
Pm-143	7.6E−04	7.6E−01	7.6E+02
Pm-144	1.1E−04	1.1E−01	1.1E+02
Pm-145	5.2E−04	5.2E−01	5.2E+02
Pm-146	4.4E−05	4.4E−02	4.4E+01
Pm-147	2.6E−02	2.6E+01	2.6E+04
Pm-148	1.7E−02	1.7E+01	1.7E+04
Pm-148m	7.6E−04	7.6E−01	7.6E+02
Pm-149	2.8E−01	2.8E+02	2.8E+05
Pm-151	1.2E−01	1.2E+02	1.2E+05
Po-210	9.3E−05	9.3E−02	9.3E+01
Pr-142	2.8E−01	2.8E+02	2.8E+05
Pr-143	1.0E−01	1.0E+02	1.0E+05
Pr-144	1.5E+01	1.5E+04	1.5E+07
Pt-191	6.4E−02	6.4E+01	6.4E+04
Pt-193	2.1E−02	2.1E+01	2.1E+04
Pt-193m	4.8E−01	4.8E+02	4.8E+05
Pt-195m	1.4E−01	1.4E+02	1.4E+05
Pt-197	1.1E+00	1.1E+03	1.1E+06
Pt-197m	3.6E+00	3.6E+03	3.6E+06
Pu-236	7.0E−06	7.0E−03	7.0E+00
Pu-237	2.3E−02	2.3E+01	2.3E+04
Pu-238	2.7E−06	2.7E−03	2.7E+00

Radionuclide	Gaseous form*	Liquid/powder forms	Solid form*
Pu-239	2.5E−06	2.5E−03	2.5E+00
Pu-240	2.5E−06	2.5E−03	2.5E+00
Pu-241	1.3E−04	1.3E−01	1.3E+02
Pu-242	2.5E−06	2.5E−03	2.5E+00
Pu-243	3.8E+00	3.8E+03	3.8E+06
Pu-244	2.4E−06	2.4E−03	2.4E+00
Pu-245	2.1E−01	2.1E+02	2.1E+05
Pu-246	4.8E−03	4.8E+00	4.8E+03
Ra-223	1.3E−04	1.3E−01	1.3E+02
Ra-224	3.2E−04	3.2E−01	3.2E+02
Ra-225	1.3E−04	1.3E−01	1.3E+02
Ra-226	5.5E−06	5.5E−03	5.5E+00
Ra-228	1.3E−05	1.3E−02	1.3E+01
Rb-81	4.2E−01	4.2E+02	4.2E+05
Rb-83	1.4E−03	1.4E+00	1.4E+03
Rb-84	2.0E−03	2.0E+00	2.0E+03
Rb-86	1.7E−02	1.7E+01	1.7E+04
Rb-87	1.0E−02	1.0E+01	1.0E+04
Rb-88	1.7E+00	1.7E+03	1.7E+06
Rb-89	6.4E−01	6.4E+02	6.4E+05
Re−184	1.8E−03	1.8E+00	1.8E+03
Re-184m	3.6E−04	3.6E−01	3.6E+02
Re-186	1.9E−01	1.9E+02	1.9E+05
Re-187	9.3E+00	9.3E+03	9.3E+06
Re-188	3.7E−01	3.7E+02	3.7E+05
Rh-103m	1.7E+02	1.7E+05	1.7E+08
Rh-105	3.4E−01	3.4E+02	3.4E+05
Ru-97	8.3E−02	8.3E+01	8.3E+04
Ru-103	3.1E−03	3.1E+00	3.1E+03
Ru-105	2.9E−01	2.9E+02	2.9E+05

Radionuclide	Gaseous form*	Liquid/powder forms	Solid form*
Ru-106	5.9E−04	5.9E−01	5.9E+02
S-35	7.5E−02	7.5E+01	7.5E+04
Sb-117	2.0E+00	2.0E+03	2.0E+06
Sb-122	3.9E−02	3.9E+01	3.9E+04
Sb-124	6.0E−04	6.0E−01	6.0E+02
Sb-125	1.4E−04	1.4E−01	1.4E+02
Sb-126	1.8E−03	1.8E+00	1.8E+03
Sb-126m	7.6E−01	7.6E+02	7.6E+05
Sb-127	2.0E−02	2.0E+01	2.0E+04
Sb-129	1.8E−01	1.8E+02	1.8E+05
Sc-44	1.4E−01	1.4E+02	1.4E+05
Sc-46	4.0E−04	4.0E−01	4.0E+02
Sc-47	1.1E−01	1.1E+02	1.1E+05
Sc-48	1.1E−02	1.1E+01	1.1E+04
Sc-49	1.0E+01	1.0E+04	1.0E+07
Se-73	1.6E−01	1.6E+02	1.6E+05
Se-75	1.1E−03	1.1E+00	1.1E+03
Se-79	6.9E−03	6.9E+00	6.9E+03
Si-31	4.7E+00	4.7E+03	4.7E+06
Si-32	7.2E−04	7.2E−01	7.2E+02
Sm-147	1.4E−05	1.4E−02	1.4E+01
Sm-151	3.5E−02	3.5E+01	3.5E+04
Sm-153	2.4E−01	2.4E+02	2.4E+05
Sn-113	1.9E−03	1.9E+00	1.9E+03
Sn-117m	2.3E−02	2.3E+01	2.3E+04
Sn-119m	2.8E−02	2.8E+01	2.8E+04
Sn-123	1.8E−02	1.8E+01	1.8E+04
Sn-125	7.2E−03	7.2E+00	7.2E+03
Sn-126	4.7E−06	4.7E−03	4.7E+00
Sr-82	1.9E−03	1.9E+00	1.9E+03

Radionuclide	Gaseous form*	Liquid/powder forms	Solid form*
Sr-85	1.9E−03	1.9E+00	1.9E+03
Sr-85m	1.5E+00	1.5E+03	1.5E+06
Sr-87m	1.2E+00	1.2E+03	1.2E+06
Sr-89	2.1E−02	2.1E+01	2.1E+04
Sr-90	5.2E−04	5.2E−01	5.2E+02
Sr-91	1.2E−01	1.2E+02	1.2E+05
Sr-92	2.5E−01	2.5E+02	2.5E+05
Ta-182	4.4E−04	4.4E−01	4.4E+02
Tb-157	2.2E−03	2.2E+00	2.2E+03
Tb-160	8.4E−04	8.4E−01	8.4E+02
Tc-95	9.0E−02	9.0E+01	9.0E+04
Tc-95m	1.4E−03	1.4E+00	1.4E+03
Tc-96	5.6E−03	5.6E+00	5.6E+03
Tc-96m	7.0E−01	7.0E+02	7.0E+05
Tc-97	1.5E−03	1.5E+00	1.5E+03
Tc-97m	7.2E−02	7.2E+01	7.2E+04
Tc-98	6.4E−06	6.4E−03	6.4E+00
Tc-99	9.0E−03	9.0E+00	9.0E+03
Tc-99m	1.4E+00	1.4E+03	1.4E+06
Tc-101	3.8E+00	3.8E+03	3.8E+06
Te-121	6.0E−03	6.0E+00	6.0E+03
Te-121m	5.3E−04	5.3E−01	5.3E+02
Te-123	1.2E−03	1.2E+00	1.2E+03
Te-123m	2.7E−03	2.7E+00	2.7E+03
Te-125m	1.5E−02	1.5E+01	1.5E+04
Te-127	2.9E+00	2.9E+03	2.9E+06
Te-127m	7.3E−03	7.3E+00	7.3E+03
Te-129	6.5E+00	6.5E+03	6.5E+06
Te-129m	6.1E−03	6.1E+00	6.1E+03
Te-131	9.4E−01	9.4E+02	9.4E+05

Radionuclide	Gaseous form*	Liquid/powder forms	Solid form*
Te-131m	1.8E−02	1.8E+01	1.8E+04
Te-132	6.2E−03	6.2E+00	6.2E+03
Te-133	1.2E+00	1.2E+03	1.2E+06
Te-133m	2.9E−01	2.9E+02	2.9E+05
Te-134	4.4E−01	4.4E+02	4.4E+05
Th-226	3.0E−02	3.0E+01	3.0E+04
Th-227	6.4E−05	6.4E−02	6.4E+01
Th-228	2.9E−06	2.9E−03	2.9E+00
Th-229	4.9E−07	4.9E−04	4.9E−01
Th-230	3.2E−06	3.2E−03	3.2E+00
Th-231	8.4E−01	8.4E+02	8.4E+05
Th-232	6.0E−07	6.0E−04	6.0E−01
Th-234	2.0E−02	2.0E+01	2.0E+04
Ti-44	5.2E−06	5.2E−03	5.2E+00
Ti-45	4.0E−01	4.0E+02	4.0E+05
Tl-200	4.4E−02	4.4E+01	4.4E+04
Tl-201	1.8E−01	1.8E+02	1.8E+05
Tl-202	1.0E−02	1.0E+01	1.0E+04
Tl-204	2.5E−02	2.5E+01	2.5E+04
Tm-170	2.4E−02	2.4E+01	2.4E+04
Tm-171	5.9E−02	5.9E+01	5.9E+04
U-230	5.0E−05	5.0E−02	5.0E+01
U-231	1.4E−01	1.4E+02	1.4E+05
U-232	1.3E−06	1.3E−03	1.3E+00
U-233	7.6E−06	7.6E−03	7.6E+00
U-234	7.6E−06	7.6E−03	7.6E+00
U-235	7.0E−06	7.0E−03	7.0E+00
U-236	8.4E−06	8.4E−03	8.4E+00
U-237	4.7E−02	4.7E+01	4.7E+04
U-238	8.6E−06	8.6E−03	8.6E+00

Radionuclide	Gaseous form*	Liquid/powder forms	Solid form*
U-239	8.3E+00	8.3E+03	8.3E+06
U-240	1.8E−01	1.8E+02	1.8E+05
V-48	1.4E−03	1.4E+00	1.4E+03
V-49	1.3E+00	1.3E+03	1.3E+06
W-181	1.1E−02	1.1E+01	1.1E+04
W-185	1.6E−01	1.6E+02	1.6E+05
W-187	1.1E−01	1.1E+02	1.1E+05
W-188	1.0E−02	1.0E+01	1.0E+04
Xe-122	7.6E−02	7.6E+01	7.6E+04
Xe-123	1.6E+00	1.6E+03	1.6E+06
Xe-125	6.0E−01		
Xe-127	7.0E+00		
Xe-129m	7.6E+01		
Xe-131m	2.2E+02		
Xe-133	5.2E+01		
Xe-133m	6.0E+01		
Xe-135	7.6E+00		
Xe-135m	4.2E+00		
Xe-138	9.9E−01		
Y-86	2.8E−02	2.8E+01	2.8E+04
Y-87	2.3E−02	2.3E+01	2.3E+04
Y-88	2.5E−04	2.5E−01	2.5E+02
Y-90	1.1E−01	1.1E+02	1.1E+05
Y-90m	4.3E−01	4.3E+02	4.3E+05
Y-91	1.8E−02	1.8E+01	1.8E+04
Y-91m	1.6E+00	1.6E+03	1.6E+06
Y-92	7.0E−01	7.0E+02	7.0E+05
Y-93	3.8E−01	3.8E+02	3.8E+05
Yb-169	5.5E−03	5.5E+00	5.5E+03
Yb-175	2.1E−01	2.1E+02	2.1E+05

Radionuclide	Gaseous form*	Liquid/powder forms	Solid form*
Zn-62	8.6E−02	8.6E+01	8.6E+04
Zn-65	4.4E−04	4.4E−01	4.4E+02
Zn-69	2.7E+01	2.7E+04	2.7E+07
Zn-69m	2.0E−01	2.0E+02	2.0E+05
Zr-86	2.4E−02	2.4E+01	2.4E+04
Zr-88	2.7E−04	2.7E−01	2.7E+02
Zr-89	1.6E−02	1.6E+01	1.6E+04
Zr-93	2.8E−03	2.8E+00	2.8E+03
Zr-95	6.4E−04	6.4E−01	6.4E+02
Zr-97	4.6E−02	4.6E+01	4.6E+04

*Radionuclides boiling at 100°C or less, or exposed to a temperature of 100°C, must be considered a gas. Capsules containing radionuclides in liquid or powder form can be considered to be solids.

**Mo-99 contained in a generator to produce Technetium-99 can be assumed to be a solid.

3. Table of Concentration Levels

(a) Table 2 may be used for determining if facilities are in compliance with the standard.

1. The concentration table as applied to emission estimates can only be used if all releases are from point sources and concentrations have been measured at the stack or vent using EPA-approved methods, and the distance between each stack or vent and the nearest resident is greater than 3 times the diameter of the stack or vent. Procedures provided in Ref. (1) shall be used to determine compliance or exemption from reporting by use of Table 2.

2. The concentration table may be used to determine compliance with the standard based on environmental measurements provided these measurements are made in conformance with the requirements of §61.107(b)(5).

4. NCRP Screening Model

The procedures described in Reference (4) may be used to determine doses to members of the general public from emissions of radionuclides to the atmosphere. Both the total dose from all radionuclides emitted, and the dose caused by radioactive iodine must be considered in accordance with the procedures in Ref. (1).

5. The COMPLY Computer Code

The COMPLY computer code may be used to determine compliance with subpart I. The compliance model in the COMPLY computer code may be used to determine the dose to members of the general public from emissions of radionuclides to the atmosphere. The EPA may add radionuclides to all or any part of COMPLY to cover radionuclides that may be used by the regulated community.

Table 2—Concentration Levels for Environmental Compliance

Radionuclide	Concentration (Ci/m^3)	Radionuclide	Concentration (Ci/m^3)
Ac-225	9.1E−14	Bi-207	1.0E−14
Ac-227	1.6E−16	Bi-210	2.9E−13
Ac-228	3.7E−12	Bi-212	5.6E−11
Ag-106	1.9E−09	Bi-213	7.1E−11
Ag-106m	1.2E−12	Bi-214	1.4E−10
Ag-108m	7.1E−15	Bk-249	5.6E−13
Ag-110m	9.1E−14	Bk-250	9.1E−11
Ag-111	2.5E−12	Br-77	4.2E−11
Al-26	4.8E−15	Br-80	1.4E−08
Am-241	1.9E−15	Br-80m	1.8E−09
Am-242	1.5E−11	Br-82	1.2E−11
Am-242m	2.0E−15	Br-83	1.2E−08
Am-243	1.8E−15	Br-84	6.7E−10
Am-244	4.0E−11	C-11	1.5E−09
Am-245	8.3E−09	C-14	1.0E−11
Am-246	1.2E−09	Ca-41	4.2E−13
Ar-37	1.6E−03	Ca-45	1.3E−12
Ar-41	1.7E−09	Ca-47	2.4E−12
As-72	2.4E−11	Cd-109	5.9E−13
As-73	1.1E−11	Cd-113	9.1E−15
As-74	2.2E−12	Cd-113m	1.7E−14
As-76	5.0E−11	Cd-115	1.6E−11
As-77	1.6E−10	Cd-115m	8.3E−13
At-211	1.1E−11	Cd-117	6.7E−11
Au-193	3.8E−10	Cd-117m	1.6E−10
Au-194	3.2E−11	Ce-139	2.6E−12
Au-195	3.1E−12	Ce-141	6.3E−12
Au-198	2.1E−11	Ce-143	3.0E−11
Au-199	4.8E−11	Ce-144	6.2E−13
Ba-131	7.1E−12	Cf-248	1.8E−14
Ba-133	5.9E−14	Cf-249	1.4E−15
Ba-133m	5.9E−11	Cf-250	3.2E−15

Radionuclide	Concentration (Ci/m^3)	Radionuclide	Concentration (Ci/m^3)
Ba-135m	1.8E−10	Cf-251	1.4E−15
Ba-139	5.6E−09	Cf-252	5.6E−15
Ba-140	1.3E−12	Cf-253	3.1E−13
Ba-141	1.4E−09	Cf-254	3.0E−15
Ba-142	1.3E−09	Cl-36	2.7E−15
Be-7	2.3E−11	Cl-38	7.7E−10
Be-10	1.6E−12	Cm-242	5.3E−14
Bi-206	2.3E−12	Cm-243	2.6E−15
Cm-244	3.3E−15	Eu-156	1.9E−12
Cm-245	1.8E−15	F-18	6.7E−10
Cm-246	1.9E−15	Fe-52	5.6E−11
Cm-247	1.9E−15	Fe-55	9.1E−12
Cm-248	5.0E−16	Fe-59	6.7E−13
Cm-249	3.7E−09	Fm-254	2.0E−11
Cm-250	9.1E−17	Fm-255	4.3E−12
Co-56	1.8E−13	Fr-223	3.3E−11
Co-57	1.3E−12	Ga-66	6.2E−11
Co-58	6.7E−13	Ga-67	7.1E−11
Co-58m	1.2E−10	Ga-68	9.1E−10
Co-60	1.7E−14	Ga-72	3.8E−11
Co-60m	.4.3E−09	Gd-152	5.0E−15
Co-61	4.5E−09	Gd-153	2.1E−12
Cr-49	1.1E−09	Gd-159	2.9E−10
Cr-51	3.1E−11	Ge-68	2.0E−13
Cs-129	1.4E−10	Ge-71	2.4E−10
Cs-131	3.3E−11	Ge-77	1.0E−10
Cs-132	4.8E−12	H-3	1.5E−09
Cs-134	2.7E−14	Hf-181	1.9E−12
Cs-134m	1.7E−10	Hg-193m	1.0E−10
Cs-135	4.0E−13	Hg-197	8.3E−11
Cs-136	5.3E−13	Hg-197m	1.1E−10
Cs-137	1.9E−14	Hg-203	1.0E−12

Radionuclide	Concentration (Ci/m^3)	Radionuclide	Concentration (Ci/m^3)
Cs-138	5.3E−10	Ho-166	7.1E−11
Cu-61	4.8E−10	Ho-166m	7.1E−15
Cu-64	5.3E−10	I-123	4.3E−10
Cu-67	5.0E−11	I-124	6.2E−13
Dy-157	5.0E−10	I-125	1.2E−13
Dy-165	6.7E−09	I-126	1.1E−13
Dy-166	1.1E−11	I-128	1.1E−08
Er-169	2.9E−11	I-129	9.1E−15
Er-171	4.0E−10	I-130	4.5E−11
Es-253	2.4E−13	I-131	2.1E−13
Es-254	2.0E−14	I-132	2.3E−10
Es-254m	1.8E−12	I-133	2.0E−11
Eu-152	2.0E−14	I-134	3.8E−10
Eu-152m	3.6E−10	I-135	1.2E−10
Eu-154	2.3E−14	In-111	3.6E−11
Eu-155	5.9E−13	In-113m	2.5E−09
In-114m	9.1E−13	Nb-95	2.2E−12
In-115	7.1E−14	Nb-95m	1.4E−11
In-115m	1.6E−09	Nb-96	2.4E−11
In-116m	4.2E−10	Nb-97	1.2E−09
In-117	1.6E−09	Nd-147	7.7E−12
In-117m	9.1E−11	Nd-149	7.1E−10
Ir-190	2.6E−12	Ni-56	1.7E−12
Ir-192	9.1E−13	Ni-57	1.8E−11
Ir-194	1.1E−10	Ni-59	1.5E−11
Ir-194m	1.7E−13	Ni-63	1.4E−11
K-40	2.7E−14	Ni-65	8.3E−10
K-42	2.6E−10	Np-235	2.5E−11
K-43	6.2E−11	Np-237	1.2E−15
K-44	5.9E−10	Np-238	1.4E−11
Kr-79	8.3E−09	Np-239	3.8E−11
Kr-81	2.1E−07	Np-240	7.7E−10

Radionuclide	Concentration (Ci/m^3)	Radionuclide	Concentration (Ci/m^3)
Kr-83m	2.3E−05	Np-240m	5.6E−09
Kr-85	1.0E−06	Os-185	1.0E−12
Kr-85m	1.3E−08	Os-191m	2.9E−10
Kr-87	2.4E−09	Os-191	1.1E−11
Kr-88	5.0E−10	Os-193	9.1E−11
La-140	1.2E−11	P-32	3.3E−13
La-141	7.7E−10	P-33	2.4E−12
La-142	2.7E−10	Pa-230	3.2E−13
Lu-177	2.4E−11	Pa-231	5.9E−16
Lu-177m	3.6E−13	Pa-233	4.8E−12
Mg-28	1.5E−11	Pa-234	1.1E−10
Mn-52	2.8E−12	Pb-203	6.2E−11
Mn-52m	6.2E−10	Pb-205	5.6E−12
Mn-53	1.5E−11	Pb-209	1.3E−08
Mn-54	2.8E−13	Pb-2I0	2.8E−15
Mn-56	2.9E−10	Pb-211	1.4E−10
Mo-93	1.1E−12	Pb-212	6.3E−12
Mo-99	1.4E−11	Pb-214	1.2E−10
Mo-101	1.0E−09	Pd-103	3.8E−11
Na-22	2.6E−14	Pd-107	3.1E−11
Na-24	2.6E−11	Pd-109	4.8E−10
Nb-90	2.6E−11	Pm-143	9.1E−13
Nb-93m	1.0E−11	Pm-144	1.3E−13
Nb-94	7.1E−15	Pm-145	6.2E−13
Pm-146	5.3E−14	Re-184m	3.7E−13
Pm-147	1.1E−11	Re-186	1.8E−11
Pm-148	5.0E−12	Re-187	2.6E−10
Pm-148m	6.7E−13	Re-188	1.7E−10
Pm-149	4.2E−11	Rh-103m	2.1E−07
Pm-151	7.1E−11	Rh-105	1.3E−10
Po-210	7.1E−15	Ru-97	6.7E−11
Pr-142	1.1E−10	Ru-103	2.6E−12

Radionuclide	Concentration (Ci/m^3)	Radionuclide	Concentration (Ci/m^3)
Pr-143	7.1E−12	Ru-105	2.8E−10
Pr-144	1.8E−08	Ru-106	3.4E−13
Pt-191	4.3E−11	S-35	1.3E−12
Pt-193	1.8E−11	Sb-117	2.4E−09
Pt-193m	4.8E−11	Sb-122	1.4E−11
Pt-195m	3.2E−11	Sb-124	5.3E−13
Pt-197	4.0E−10	Sb-125	1.6E−13
Pt-197m	2.6E−09	Sb-126	1.4E−12
Pu-236	5.9E−15	Sb-126m	9.1E−10
Pu-237	1.9E−11	Sb-127	7.1E−12
Pu-238	2.1E−15	Sb-129	7.7E−11
Pu-239	2.0E−15	Sc-44	1.7E−10
Pu-240	2.0E−15	Sc-46	4.2E−13
Pu-241	1.0E−13	Sc-47	3.8E−11
Pu-242	2.0E−15	Sc-48	9.1E−12
Pu-243	4.2E−09	Sc-49	1.2E−08
Pu-244	2.0E−15	Se-73	1.7E−10
Pu-245	2.1E−10	Se-75	1.7E−13
Pu-246	2.2E−12	Se-79	1.1E−13
Ra-223	4.2E−14	Si-31	5.6E−09
Ra-224	1.5E−13	Si-32	3.4E−14
Ra-225	5.0E−14	Sm-147	1.4E−14
Ra-226	3.3E−15	Sm-151	2.1E−11
Ra-228	5.9E−15	Sm-153	5.9E−11
Rb-81	5.0E−10	Sn-113	1.4E−12
Rb-83	3.4E−13	Sn-117m	5.6E−12
Rb-84	3.6E−13	Sn-119m	5.3E−12
Rb-86	5.6E−13	Sn-123	1.1E−12
Rb-87	1.6E−13	Sn-125	1.7E−12
Rb-88	2.1E−09	Sn-126	5.3E−15
Rb-89	7.1E−10	Sr-82	6.2E−13
Re-184	1.5E−12	Sr-85	1.8E−12

Radionuclide	Concentration (Ci/m^3)	Radionuclide	Concentration (Ci/m^3)
Sr-85m	1.6E−09	Th-232	6.2E−16
Sr-87m	1.4E−09	Th-234	2.2E−12
Sr-89	1.8E−12	Ti-44	6.2E−15
Sr-90	1.9E−14	Ti-45	4.8E−10
Sr-91	9.1E−11	Tl-200	4.5E−11
Sr-92	2.9E−10	Tl-201	1.0E−10
Ta-182	4.5E−13	Tl-202	5.0E−12
Tb-157	2.5E−12	Tl-204	1.2E−12
Tb-160	7.7E−13	Tm-170	3.3E−12
Tc-95	1.0E−10	Tm-171	2.6E−11
Tc-95m	1.4E−12	U-230	1.5E−14
Tc-96	5.6E−12	U-231	4.2E−11
Tc-96m	6.7E−10	U-232	1.3E−15
Tc-97	.7.1E−13	U-233	7.1E−15
Tc-97m	7.1E−12	U-234	7.7E−15
Tc-98	6.7E−15	U-235	7.1E−15
Tc-99	1.4E−13	U-236	7.7E−15
Tc-99m	1.7E−09	U-237	1.0E−11
Tc-101	4.5E−09	U-238	8.3E−15
Te-121	1.0E−12	U-239	4.3E−09
Te-121m	1.2E−13	U-240	1.3E−10
Te-123	1.4E−13	V-48	1.0E−12
Te-123m	2.0E−13	V-49	1.6E−10
Te-125m	3.6E−13	W-181	6.7E−12
Te-127	1.0E−09	W-185	2.6E−12
Te-127m	1.5E−13	W-187	7.7E−11
Te-129	7.7E−09	W-188	5.3E−13
Te-129m	1.4E−13	Xe-122	9.1E−11
Te-131	9.1E−11	Xe-123	1.6E−09
Te-131m	1.0E−12	Xe-125	1.1E−11
Te-132	7.1E−13	Xe-127	8.3E−09
Te-133	9.1E−10	Xe-129m	9.1E−08

Radionuclide	Concentration (Ci/m^3)	Radionuclide	Concentration (Ci/m^3)
Te-133m	2.2E−10	Xe-131m	2.6E−07
Te-134	5.3E−10	Xe-133	6.2E−08
Th-226	3.4E−11	Xe-133m	7.1E−08
Th-227	3.8E−14	Xe-135	9.1E−09
Th-228	3.1E−15	Xe-135m	5.0E−09
Th-229	5.3E−16	Xe-138	1.2E−09
Th-230	3.4E−15	Y-86	3.0E−11
Th-231	2.9E−10	Y-87	1.7E−11
Y-88	2.7E−13	Zn-65	9.1E−14
Y-90	1.3E−11	Zn-69	3.2E−08
Y-90m	1.9E−10	Zn-69m	1.7E−10
Y-91	2.1E−12	Zr-86	2.4E−11
Y-91m	1.3E−09	Zr-88	3.1E−13
Y-92	8.3E−10	Zr-89	1.3E−11
Y-93	2.9E−10	Zr-93	2.6E−12
Yb-169	3.7E−12	Zr-95	6.7E−13
Yb-175	4.3E−11	Zr-97	3.8E−11
Zn-62	9.1E−11		

6. References

(1) Environmental Protection Agency, “A Guide for Determining Compliance with the Clean Air Act Standards for Radionuclides Emissions from NRC-Licensed and Non-DOE Federal Facilities”, EPA 520/1–89–002, October 1989.

(2) Environmental Protection Agency, “User's Guide for the COMPLY Code”, EPA 520/1–89–003, October 1989.

(3) Environmental Protection Agency, “Background Information Document: Procedures Approved for Demonstrating Compliance with 40 CFR Part 61, Subpart I”, EPA 520/1–89–001, January 1989.

(4) National Council on Radiation Protection and Measurement, “Screening Techniques for Determining Compliance with Environmental Standards” NCRP Commentary No. 3, Revision of January 1989 with addendum of October, 1989.

[54 FR 51711, Dec. 15, 1989]

ATTACHMENT D

Subpart Kb—Standards of Performance for Volatile Organic Liquid Storage Vessels (Including Petroleum Liquid Storage Vessels) for Which Construction, Reconstruction, or Modification Commenced After July 23, 1984

PART 70 OPERATING PERMIT
OFFICE OF AIR QUALITY

INEOS USA LLC
2357 Standard Avenue
Whiting, Indiana 46394
089-25489-00046

Attachment D

Subpart Kb—Standards of Performance for Volatile Organic Liquid Storage Vessels (Including Petroleum Liquid Storage Vessels) for Which Construction, Reconstruction, or Modification Commenced After July 23, 1984

Source: 52 FR 11429, Apr. 8, 1987, unless otherwise noted.

§ 60.110b Applicability and designation of affected facility.

(a) Except as provided in paragraph (b) of this section, the affected facility to which this subpart applies is each storage vessel with a capacity greater than or equal to 75 cubic meters (m^3) that is used to store volatile organic liquids (VOL) for which construction, reconstruction, or modification is commenced after July 23, 1984.

(b) This subpart does not apply to storage vessels with a capacity greater than or equal to 151 m^3 storing a liquid with a maximum true vapor pressure less than 3.5 kilopascals (kPa) or with a capacity greater than or equal to 75 m^3 but less than 151 m^3 storing a liquid with a maximum true vapor pressure less than 15.0 kPa.

(c) [Reserved]

(d) This subpart does not apply to the following:

(1) Vessels at coke oven by-product plants.

(2) Pressure vessels designed to operate in excess of 204.9 kPa and without emissions to the atmosphere.

(3) Vessels permanently attached to mobile vehicles such as trucks, railcars, barges, or ships.

(4) Vessels with a design capacity less than or equal to 1,589.874 m^3 used for petroleum or condensate stored, processed, or treated prior to custody transfer.

(5) Vessels located at bulk gasoline plants.

(6) Storage vessels located at gasoline service stations.

(7) Vessels used to store beverage alcohol.

(8) Vessels subject to subpart GGGG of 40 CFR part 63.

(e) *Alternative means of compliance* —(1) *Option to comply with part 65.* Owners or operators may choose to comply with 40 CFR part 65, subpart C, to satisfy the requirements of §§60.112b through 60.117b for storage vessels that are subject to this subpart that meet the specifications in paragraphs (e)(1)(i) and (ii) of this section. When choosing to comply with 40 CFR part 65, subpart C, the monitoring requirements of §60.116b(c), (e), (f)(1), and (g) still apply. Other provisions applying to owners or operators who choose to comply with 40 CFR part 65 are provided in 40 CFR 65.1.

(i) A storage vessel with a design capacity greater than or equal to 151 m^3 containing a VOL that, as stored, has a maximum true vapor pressure equal to or greater than 5.2 kPa; or

(ii) A storage vessel with a design capacity greater than 75 m^3 but less than 151 m^3 containing a VOL that, as stored, has a maximum true vapor pressure equal to or greater than 27.6 kPa.

(2) *Part 60, subpart A.* Owners or operators who choose to comply with 40 CFR part 65, subpart C, must also comply with §§60.1, 60.2, 60.5, 60.6, 60.7(a)(1) and (4), 60.14, 60.15, and 60.16 for those storage vessels. All sections and paragraphs of subpart A of this part that are not mentioned in this paragraph (e)(2) do not apply to owners or operators of storage vessels complying with 40 CFR part 65, subpart C, except that provisions required to be met prior to implementing 40 CFR part 65 still apply. Owners and operators who choose to comply with 40 CFR part 65, subpart C, must comply with 40 CFR part 65, subpart A.

(3) *Internal floating roof report.* If an owner or operator installs an internal floating roof and, at initial startup, chooses to comply with 40 CFR part 65, subpart C, a report shall be furnished to the Administrator stating that the control equipment meets the specifications of 40 CFR 65.43. This report shall be an attachment to the notification required by 40 CFR 65.5(b).

(4) *External floating roof report.* If an owner or operator installs an external floating roof and, at initial startup, chooses to comply with 40 CFR part 65, subpart C, a report shall be furnished to the Administrator stating that the control equipment meets the specifications of 40 CFR 65.44. This report shall be an attachment to the notification required by 40 CFR 65.5(b).

[52 FR 11429, Apr. 8, 1987, as amended at 54 FR 32973, Aug. 11, 1989; 65 FR 78275, Dec. 14, 2000; 68 FR 59332, Oct. 15, 2003]

§ 60.111b Definitions.

Terms used in this subpart are defined in the Act, in subpart A of this part, or in this subpart as follows:

Bulk gasoline plant means any gasoline distribution facility that has a gasoline throughput less than or equal to 75,700 liters per day. Gasoline throughput shall be the maximum calculated design throughput as may be limited by compliance with an enforceable condition under Federal requirement or Federal, State or local law, and discoverable by the Administrator and any other person.

Condensate means hydrocarbon liquid separated from natural gas that condenses due to changes in the temperature or pressure, or both, and remains liquid at standard conditions.

Custody transfer means the transfer of produced petroleum and/or condensate, after processing and/or treatment in the producing operations, from storage vessels or automatic transfer facilities to pipelines or any other forms of transportation.

Fill means the introduction of VOL into a storage vessel but not necessarily to complete capacity.

Gasoline service station means any site where gasoline is dispensed to motor vehicle fuel tanks from stationary storage tanks.

Maximum true vapor pressure means the equilibrium partial pressure exerted by the volatile organic compounds (as defined in 40 CFR 51.100) in the stored VOL at the temperature equal to the highest calendar-month average of the VOL storage temperature for VOL's stored above or below the ambient temperature or at the local maximum monthly average temperature as reported by the National Weather Service for VOL's stored at the ambient temperature, as determined:

(1) In accordance with methods described in American Petroleum institute Bulletin 2517, Evaporation Loss From External Floating Roof Tanks, (incorporated by reference—see §60.17); or

(2) As obtained from standard reference texts; or

(3) As determined by ASTM D2879–83, 96, or 97 (incorporated by reference—see §60.17);

(4) Any other method approved by the Administrator.

Petroleum means the crude oil removed from the earth and the oils derived from tar sands, shale, and coal.

Petroleum liquids means petroleum, condensate, and any finished or intermediate products manufactured in a petroleum refinery.

Process tank means a tank that is used within a process (including a solvent or raw material recovery process) to collect material discharged from a feedstock storage vessel or equipment within the process before the material is transferred to other equipment within the process, to a product or by-product storage vessel, or to a vessel used to store recovered solvent or raw material. In many process tanks, unit operations such as reactions and blending are conducted. Other process tanks, such as surge control vessels and bottoms receivers, however, may not involve unit operations.

Reid vapor pressure means the absolute vapor pressure of volatile crude oil and volatile nonviscous petroleum liquids except liquified petroleum gases, as determined by ASTM D323–82 or 94 (incorporated by reference—see §60.17).

Storage vessel means each tank, reservoir, or container used for the storage of volatile organic liquids but does not include:

(1) Frames, housing, auxiliary supports, or other components that are not directly involved in the containment of liquids or vapors;

(2) Subsurface caverns or porous rock reservoirs; or

(3) Process tanks.

Volatile organic liquid (VOL) means any organic liquid which can emit volatile organic compounds (as defined in 40 CFR 51.100) into the atmosphere.

Waste means any liquid resulting from industrial, commercial, mining or agricultural operations, or from community activities that is discarded or is being accumulated, stored, or physically, chemically, or biologically treated prior to being discarded or recycled.

[52 FR 11429, Apr. 8, 1987, as amended at 54 FR 32973, Aug. 11, 1989; 65 FR 61756, Oct. 17, 2000; 68 FR 59333, Oct. 15, 2003]

§ 60.112b Standard for volatile organic compounds (VOC).

(a) The owner or operator of each storage vessel either with a design capacity greater than or equal to 151 m^3 containing a VOL that, as stored, has a maximum true vapor pressure equal to or greater than 5.2 kPa but less than 76.6 kPa or with a design capacity greater than or equal to 75 m^3 but less than 151 m^3 containing a VOL that, as stored, has a maximum true vapor pressure equal to or greater than 27.6 kPa but less than 76.6 kPa, shall equip each storage vessel with one of the following:

(1) A fixed roof in combination with an internal floating roof meeting the following specifications:

(i) The internal floating roof shall rest or float on the liquid surface (but not necessarily in complete contact with it) inside a storage vessel that has a fixed roof. The internal floating roof shall be floating on the liquid surface at all times, except during initial fill and during those intervals when the storage vessel is completely emptied or subsequently emptied and refilled. When the roof is resting on the leg supports, the process of filling, emptying, or refilling shall be continuous and shall be accomplished as rapidly as possible.

(ii) Each internal floating roof shall be equipped with one of the following closure devices between the wall of the storage vessel and the edge of the internal floating roof:

(A) A foam- or liquid-filled seal mounted in contact with the liquid (liquid-mounted seal). A liquid-mounted seal means a foam- or liquid-filled seal mounted in contact with the liquid between the wall of the storage vessel and the floating roof continuously around the circumference of the tank.

(B) Two seals mounted one above the other so that each forms a continuous closure that completely covers the space between the wall of the storage vessel and the edge of the internal floating roof. The lower seal may be vapor-mounted, but both must be continuous.

(C) A mechanical shoe seal. A mechanical shoe seal is a metal sheet held vertically against the wall of the storage vessel by springs or weighted levers and is connected by braces to the floating roof. A flexible coated fabric (envelope) spans the annular space between the metal sheet and the floating roof.

(iii) Each opening in a noncontact internal floating roof except for automatic bleeder vents (vacuum breaker vents) and the rim space vents is to provide a projection below the liquid surface.

(iv) Each opening in the internal floating roof except for leg sleeves, automatic bleeder vents, rim space vents, column wells, ladder wells, sample wells, and stub drains is to be equipped with a cover or lid which is to be maintained in a closed position at all times (i.e., no visible gap) except when the device is

in actual use. The cover or lid shall be equipped with a gasket. Covers on each access hatch and automatic gauge float well shall be bolted except when they are in use.

(v) Automatic bleeder vents shall be equipped with a gasket and are to be closed at all times when the roof is floating except when the roof is being floated off or is being landed on the roof leg supports.

(vi) Rim space vents shall be equipped with a gasket and are to be set to open only when the internal floating roof is not floating or at the manufacturer's recommended setting.

(vii) Each penetration of the internal floating roof for the purpose of sampling shall be a sample well. The sample well shall have a slit fabric cover that covers at least 90 percent of the opening.

(viii) Each penetration of the internal floating roof that allows for passage of a column supporting the fixed roof shall have a flexible fabric sleeve seal or a gasketed sliding cover.

(ix) Each penetration of the internal floating roof that allows for passage of a ladder shall have a gasketed sliding cover.

(2) An external floating roof. An external floating roof means a pontoon-type or double-deck type cover that rests on the liquid surface in a vessel with no fixed roof. Each external floating roof must meet the following specifications:

(i) Each external floating roof shall be equipped with a closure device between the wall of the storage vessel and the roof edge. The closure device is to consist of two seals, one above the other. The lower seal is referred to as the primary seal, and the upper seal is referred to as the secondary seal.

(A) The primary seal shall be either a mechanical shoe seal or a liquid-mounted seal. Except as provided in §60.113b(b)(4), the seal shall completely cover the annular space between the edge of the floating roof and tank wall.

(B) The secondary seal shall completely cover the annular space between the external floating roof and the wall of the storage vessel in a continuous fashion except as allowed in §60.113b(b)(4).

(ii) Except for automatic bleeder vents and rim space vents, each opening in a noncontact external floating roof shall provide a projection below the liquid surface. Except for automatic bleeder vents, rim space vents, roof drains, and leg sleeves, each opening in the roof is to be equipped with a gasketed cover, seal, or lid that is to be maintained in a closed position at all times (i.e., no visible gap) except when the device is in actual use. Automatic bleeder vents are to be closed at all times when the roof is floating except when the roof is being floated off or is being landed on the roof leg supports. Rim vents are to be set to open when the roof is being floated off the roof legs supports or at the manufacturer's recommended setting. Automatic bleeder vents and rim space vents are to be gasketed. Each emergency roof drain is to be provided with a slotted membrane fabric cover that covers at least 90 percent of the area of the opening.

(iii) The roof shall be floating on the liquid at all times (i.e., off the roof leg supports) except during initial fill until the roof is lifted off leg supports and when the tank is completely emptied and subsequently refilled. The process of filling, emptying, or refilling when the roof is resting on the leg supports shall be continuous and shall be accomplished as rapidly as possible.

(3) A closed vent system and control device meeting the following specifications:

(i) The closed vent system shall be designed to collect all VOC vapors and gases discharged from the storage vessel and operated with no detectable emissions as indicated by an instrument reading of less than 500 ppm above background and visual inspections, as determined in part 60, subpart VV, §60.485(b).

(ii) The control device shall be designed and operated to reduce inlet VOC emissions by 95 percent or greater. If a flare is used as the control device, it shall meet the specifications described in the general control device requirements (§60.18) of the General Provisions.

(4) A system equivalent to those described in paragraphs (a)(1), (a)(2), or (a)(3) of this section as

provided in §60.114b of this subpart.

(b) The owner or operator of each storage vessel with a design capacity greater than or equal to 75 m^3 which contains a VOL that, as stored, has a maximum true vapor pressure greater than or equal to 76.6 kPa shall equip each storage vessel with one of the following:

(1) A closed vent system and control device as specified in §60.112b(a)(3).

(2) A system equivalent to that described in paragraph (b)(1) as provided in §60.114b of this subpart.

(c) *Site-specific standard for Merck & Co., Inc.'s Stonewall Plant in Elkton, Virginia.* This paragraph applies only to the pharmaceutical manufacturing facility, commonly referred to as the Stonewall Plant, located at Route 340 South, in Elkton, Virginia ("site").

(1) For any storage vessel that otherwise would be subject to the control technology requirements of paragraphs (a) or (b) of this section, the site shall have the option of either complying directly with the requirements of this subpart, or reducing the site-wide total criteria pollutant emissions cap (total emissions cap) in accordance with the procedures set forth in a permit issued pursuant to 40 CFR 52.2454. If the site chooses the option of reducing the total emissions cap in accordance with the procedures set forth in such permit, the requirements of such permit shall apply in lieu of the otherwise applicable requirements of this subpart for such storage vessel.

(2) For any storage vessel at the site not subject to the requirements of 40 CFR 60.112b (a) or (b), the requirements of 40 CFR 60.116b (b) and (c) and the General Provisions (subpart A of this part) shall not apply.

[52 FR 11429, Apr. 8, 1987, as amended at 62 FR 52641, Oct. 8, 1997]

§ 60.113b Testing and procedures.

The owner or operator of each storage vessel as specified in §60.112b(a) shall meet the requirements of paragraph (a), (b), or (c) of this section. The applicable paragraph for a particular storage vessel depends on the control equipment installed to meet the requirements of §60.112b.

(a) After installing the control equipment required to meet §60.112b(a)(1) (permanently affixed roof and internal floating roof), each owner or operator shall:

(1) Visually inspect the internal floating roof, the primary seal, and the secondary seal (if one is in service), prior to filling the storage vessel with VOL. If there are holes, tears, or other openings in the primary seal, the secondary seal, or the seal fabric or defects in the internal floating roof, or both, the owner or operator shall repair the items before filling the storage vessel.

(2) For Vessels equipped with a liquid-mounted or mechanical shoe primary seal, visually inspect the internal floating roof and the primary seal or the secondary seal (if one is in service) through manholes and roof hatches on the fixed roof at least once every 12 months after initial fill. If the internal floating roof is not resting on the surface of the VOL inside the storage vessel, or there is liquid accumulated on the roof, or the seal is detached, or there are holes or tears in the seal fabric, the owner or operator shall repair the items or empty and remove the storage vessel from service within 45 days. If a failure that is detected during inspections required in this paragraph cannot be repaired within 45 days and if the vessel cannot be emptied within 45 days, a 30-day extension may be requested from the Administrator in the inspection report required in §60.115b(a)(3). Such a request for an extension must document that alternate storage capacity is unavailable and specify a schedule of actions the company will take that will assure that the control equipment will be repaired or the vessel will be emptied as soon as possible.

(3) For vessels equipped with a double-seal system as specified in §60.112b(a)(1)(ii)(B):

(i) Visually inspect the vessel as specified in paragraph (a)(4) of this section at least every 5 years; or

(ii) Visually inspect the vessel as specified in paragraph (a)(2) of this section.

(4) Visually inspect the internal floating roof, the primary seal, the secondary seal (if one is in service),

gaskets, slotted membranes and sleeve seals (if any) each time the storage vessel is emptied and degassed. If the internal floating roof has defects, the primary seal has holes, tears, or other openings in the seal or the seal fabric, or the secondary seal has holes, tears, or other openings in the seal or the seal fabric, or the gaskets no longer close off the liquid surfaces from the atmosphere, or the slotted membrane has more than 10 percent open area, the owner or operator shall repair the items as necessary so that none of the conditions specified in this paragraph exist before refilling the storage vessel with VOL. In no event shall inspections conducted in accordance with this provision occur at intervals greater than 10 years in the case of vessels conducting the annual visual inspection as specified in paragraphs (a)(2) and (a)(3)(ii) of this section and at intervals no greater than 5 years in the case of vessels specified in paragraph (a)(3)(i) of this section.

(5) Notify the Administrator in writing at least 30 days prior to the filling or refilling of each storage vessel for which an inspection is required by paragraphs (a)(1) and (a)(4) of this section to afford the Administrator the opportunity to have an observer present. If the inspection required by paragraph (a)(4) of this section is not planned and the owner or operator could not have known about the inspection 30 days in advance or refilling the tank, the owner or operator shall notify the Administrator at least 7 days prior to the refilling of the storage vessel. Notification shall be made by telephone immediately followed by written documentation demonstrating why the inspection was unplanned. Alternatively, this notification including the written documentation may be made in writing and sent by express mail so that it is received by the Administrator at least 7 days prior to the refilling.

(b) After installing the control equipment required to meet §60.112b(a)(2) (external floating roof), the owner or operator shall:

(1) Determine the gap areas and maximum gap widths, between the primary seal and the wall of the storage vessel and between the secondary seal and the wall of the storage vessel according to the following frequency.

(i) Measurements of gaps between the tank wall and the primary seal (seal gaps) shall be performed during the hydrostatic testing of the vessel or within 60 days of the initial fill with VOL and at least once every 5 years thereafter.

(ii) Measurements of gaps between the tank wall and the secondary seal shall be performed within 60 days of the initial fill with VOL and at least once per year thereafter.

(iii) If any source ceases to store VOL for a period of 1 year or more, subsequent introduction of VOL into the vessel shall be considered an initial fill for the purposes of paragraphs (b)(1)(i) and (b)(1)(ii) of this section.

(2) Determine gap widths and areas in the primary and secondary seals individually by the following procedures:

(i) Measure seal gaps, if any, at one or more floating roof levels when the roof is floating off the roof leg supports.

(ii) Measure seal gaps around the entire circumference of the tank in each place where a 0.32-cm diameter uniform probe passes freely (without forcing or binding against seal) between the seal and the wall of the storage vessel and measure the circumferential distance of each such location.

(iii) The total surface area of each gap described in paragraph (b)(2)(ii) of this section shall be determined by using probes of various widths to measure accurately the actual distance from the tank wall to the seal and multiplying each such width by its respective circumferential distance.

(3) Add the gap surface area of each gap location for the primary seal and the secondary seal individually and divide the sum for each seal by the nominal diameter of the tank and compare each ratio to the respective standards in paragraph (b)(4) of this section.

(4) Make necessary repairs or empty the storage vessel within 45 days of identification in any inspection for seals not meeting the requirements listed in (b)(4) (i) and (ii) of this section:

(i) The accumulated area of gaps between the tank wall and the mechanical shoe or liquid-mounted

primary seal shall not exceed 212 Cm^2 per meter of tank diameter, and the width of any portion of any gap shall not exceed 3.81 cm.

(A) One end of the mechanical shoe is to extend into the stored liquid, and the other end is to extend a minimum vertical distance of 61 cm above the stored liquid surface.

(B) There are to be no holes, tears, or other openings in the shoe, seal fabric, or seal envelope.

(ii) The secondary seal is to meet the following requirements:

(A) The secondary seal is to be installed above the primary seal so that it completely covers the space between the roof edge and the tank wall except as provided in paragraph (b)(2)(iii) of this section.

(B) The accumulated area of gaps between the tank wall and the secondary seal shall not exceed 21.2 cm^2 per meter of tank diameter, and the width of any portion of any gap shall not exceed 1.27 cm.

(C) There are to be no holes, tears, or other openings in the seal or seal fabric.

(iii) If a failure that is detected during inspections required in paragraph (b)(1) of §60.113b(b) cannot be repaired within 45 days and if the vessel cannot be emptied within 45 days, a 30-day extension may be requested from the Administrator in the inspection report required in §60.115b(b)(4). Such extension request must include a demonstration of unavailability of alternate storage capacity and a specification of a schedule that will assure that the control equipment will be repaired or the vessel will be emptied as soon as possible.

(5) Notify the Administrator 30 days in advance of any gap measurements required by paragraph (b)(1) of this section to afford the Administrator the opportunity to have an observer present.

(6) Visually inspect the external floating roof, the primary seal, secondary seal, and fittings each time the vessel is emptied and degassed.

(i) If the external floating roof has defects, the primary seal has holes, tears, or other openings in the seal or the seal fabric, or the secondary seal has holes, tears, or other openings in the seal or the seal fabric, the owner or operator shall repair the items as necessary so that none of the conditions specified in this paragraph exist before filling or refilling the storage vessel with VOL.

(ii) For all the inspections required by paragraph (b)(6) of this section, the owner or operator shall notify the Administrator in writing at least 30 days prior to the filling or refilling of each storage vessel to afford the Administrator the opportunity to inspect the storage vessel prior to refilling. If the inspection required by paragraph (b)(6) of this section is not planned and the owner or operator could not have known about the inspection 30 days in advance of refilling the tank, the owner or operator shall notify the Administrator at least 7 days prior to the refilling of the storage vessel. Notification shall be made by telephone immediately followed by written documentation demonstrating why the inspection was unplanned. Alternatively, this notification including the written documentation may be made in writing and sent by express mail so that it is received by the Administrator at least 7 days prior to the refilling.

(c) The owner or operator of each source that is equipped with a closed vent system and control device as required in §60.112b (a)(3) or (b)(2) (other than a flare) is exempt from §60.8 of the General Provisions and shall meet the following requirements.

(1) Submit for approval by the Administrator as an attachment to the notification required by §60.7(a)(1) or, if the facility is exempt from §60.7(a)(1), as an attachment to the notification required by §60.7(a)(2), an operating plan containing the information listed below.

(i) Documentation demonstrating that the control device will achieve the required control efficiency during maximum loading conditions. This documentation is to include a description of the gas stream which enters the control device, including flow and VOC content under varying liquid level conditions (dynamic and static) and manufacturer's design specifications for the control device. If the control device or the closed vent capture system receives vapors, gases, or liquids other than fuels from sources that are not designated sources under this subpart, the efficiency demonstration is to include consideration of all vapors, gases, and liquids received by the closed vent capture system and control device. If an enclosed

combustion device with a minimum residence time of 0.75 seconds and a minimum temperature of 816 °C is used to meet the 95 percent requirement, documentation that those conditions will exist is sufficient to meet the requirements of this paragraph.

(ii) A description of the parameter or parameters to be monitored to ensure that the control device will be operated in conformance with its design and an explanation of the criteria used for selection of that parameter (or parameters).

(2) Operate the closed vent system and control device and monitor the parameters of the closed vent system and control device in accordance with the operating plan submitted to the Administrator in accordance with paragraph (c)(1) of this section, unless the plan was modified by the Administrator during the review process. In this case, the modified plan applies.

(d) The owner or operator of each source that is equipped with a closed vent system and a flare to meet the requirements in §60.112b (a)(3) or (b)(2) shall meet the requirements as specified in the general control device requirements, §60.18 (e) and (f).

[52 FR 11429, Apr. 8, 1987, as amended at 54 FR 32973, Aug. 11, 1989]

§ 60.114b Alternative means of emission limitation.

(a) If, in the Administrator's judgment, an alternative means of emission limitation will achieve a reduction in emissions at least equivalent to the reduction in emissions achieved by any requirement in §60.112b, the Administrator will publish in theFederal Registera notice permitting the use of the alternative means for purposes of compliance with that requirement.

(b) Any notice under paragraph (a) of this section will be published only after notice and an opportunity for a hearing.

(c) Any person seeking permission under this section shall submit to the Administrator a written application including:

(1) An actual emissions test that uses a full-sized or scale-model storage vessel that accurately collects and measures all VOC emissions from a given control device and that accurately simulates wind and accounts for other emission variables such as temperature and barometric pressure.

(2) An engineering evaluation that the Administrator determines is an accurate method of determining equivalence.

(d) The Administrator may condition the permission on requirements that may be necessary to ensure operation and maintenance to achieve the same emissions reduction as specified in §60.112b.

§ 60.115b Reporting and recordkeeping requirements.

The owner or operator of each storage vessel as specified in §60.112b(a) shall keep records and furnish reports as required by paragraphs (a), (b), or (c) of this section depending upon the control equipment installed to meet the requirements of §60.112b. The owner or operator shall keep copies of all reports and records required by this section, except for the record required by (c)(1), for at least 2 years. The record required by (c)(1) will be kept for the life of the control equipment.

(a) After installing control equipment in accordance with §60.112b(a)(1) (fixed roof and internal floating roof), the owner or operator shall meet the following requirements.

(1) Furnish the Administrator with a report that describes the control equipment and certifies that the control equipment meets the specifications of §60.112b(a)(1) and §60.113b(a)(1). This report shall be an attachment to the notification required by §60.7(a)(3).

(2) Keep a record of each inspection performed as required by §60.113b (a)(1), (a)(2), (a)(3), and (a)(4). Each record shall identify the storage vessel on which the inspection was performed and shall contain the date the vessel was inspected and the observed condition of each component of the control equipment (seals, internal floating roof, and fittings).

(3) If any of the conditions described in §60.113b(a)(2) are detected during the annual visual inspection required by §60.113b(a)(2), a report shall be furnished to the Administrator within 30 days of the inspection. Each report shall identify the storage vessel, the nature of the defects, and the date the storage vessel was emptied or the nature of and date the repair was made.

(4) After each inspection required by §60.113b(a)(3) that finds holes or tears in the seal or seal fabric, or defects in the internal floating roof, or other control equipment defects listed in §60.113b(a)(3)(ii), a report shall be furnished to the Administrator within 30 days of the inspection. The report shall identify the storage vessel and the reason it did not meet the specifications of §61.112b(a)(1) or §60.113b(a)(3) and list each repair made.

(b) After installing control equipment in accordance with §61.112b(a)(2) (external floating roof), the owner or operator shall meet the following requirements.

(1) Furnish the Administrator with a report that describes the control equipment and certifies that the control equipment meets the specifications of §60.112b(a)(2) and §60.113b(b)(2), (b)(3), and (b)(4). This report shall be an attachment to the notification required by §60.7(a)(3).

(2) Within 60 days of performing the seal gap measurements required by §60.113b(b)(1), furnish the Administrator with a report that contains:

(i) The date of measurement.

(ii) The raw data obtained in the measurement.

(iii) The calculations described in §60.113b (b)(2) and (b)(3).

(3) Keep a record of each gap measurement performed as required by §60.113b(b). Each record shall identify the storage vessel in which the measurement was performed and shall contain:

(i) The date of measurement.

(ii) The raw data obtained in the measurement.

(iii) The calculations described in §60.113b (b)(2) and (b)(3).

(4) After each seal gap measurement that detects gaps exceeding the limitations specified by §60.113b(b)(4), submit a report to the Administrator within 30 days of the inspection. The report will identify the vessel and contain the information specified in paragraph (b)(2) of this section and the date the vessel was emptied or the repairs made and date of repair.

(c) After installing control equipment in accordance with §60.112b (a)(3) or (b)(1) (closed vent system and control device other than a flare), the owner or operator shall keep the following records.

(1) A copy of the operating plan.

(2) A record of the measured values of the parameters monitored in accordance with §60.113b(c)(2).

(d) After installing a closed vent system and flare to comply with §60.112b, the owner or operator shall meet the following requirements.

(1) A report containing the measurements required by §60.18(f) (1), (2), (3), (4), (5), and (6) shall be furnished to the Administrator as required by §60.8 of the General Provisions. This report shall be submitted within 6 months of the initial start-up date.

(2) Records shall be kept of all periods of operation during which the flare pilot flame is absent.

(3) Semiannual reports of all periods recorded under §60.115b(d)(2) in which the pilot flame was absent shall be furnished to the Administrator.

§ 60.116b Monitoring of operations.

(a) The owner or operator shall keep copies of all records required by this section, except for the record required by paragraph (b) of this section, for at least 2 years. The record required by paragraph (b) of this section will be kept for the life of the source.

(b) The owner or operator of each storage vessel as specified in §60.110b(a) shall keep readily accessible records showing the dimension of the storage vessel and an analysis showing the capacity of the storage vessel.

(c) Except as provided in paragraphs (f) and (g) of this section, the owner or operator of each storage vessel either with a design capacity greater than or equal to 151 m^3 storing a liquid with a maximum true vapor pressure greater than or equal to 3.5 kPa or with a design capacity greater than or equal to 75 m^3 but less than 151 m^3 storing a liquid with a maximum true vapor pressure greater than or equal to 15.0 kPa shall maintain a record of the VOL stored, the period of storage, and the maximum true vapor pressure of that VOL during the respective storage period.

(d) Except as provided in paragraph (g) of this section, the owner or operator of each storage vessel either with a design capacity greater than or equal to 151 m^3 storing a liquid with a maximum true vapor pressure that is normally less than 5.2 kPa or with a design capacity greater than or equal to 75 m^3 but less than 151 m^3 storing a liquid with a maximum true vapor pressure that is normally less than 27.6 kPa shall notify the Administrator within 30 days when the maximum true vapor pressure of the liquid exceeds the respective maximum true vapor vapor pressure values for each volume range.

(e) Available data on the storage temperature may be used to determine the maximum true vapor pressure as determined below.

(1) For vessels operated above or below ambient temperatures, the maximum true vapor pressure is calculated based upon the highest expected calendar-month average of the storage temperature. For vessels operated at ambient temperatures, the maximum true vapor pressure is calculated based upon the maximum local monthly average ambient temperature as reported by the National Weather Service.

(2) For crude oil or refined petroleum products the vapor pressure may be obtained by the following:

(i) Available data on the Reid vapor pressure and the maximum expected storage temperature based on the highest expected calendar-month average temperature of the stored product may be used to determine the maximum true vapor pressure from nomographs contained in API Bulletin 2517 (incorporated by reference—see §60.17), unless the Administrator specifically requests that the liquid be sampled, the actual storage temperature determined, and the Reid vapor pressure determined from the sample(s).

(ii) The true vapor pressure of each type of crude oil with a Reid vapor pressure less than 13.8 kPa or with physical properties that preclude determination by the recommended method is to be determined from available data and recorded if the estimated maximum true vapor pressure is greater than 3.5 kPa.

(3) For other liquids, the vapor pressure:

(i) May be obtained from standard reference texts, or

(ii) Determined by ASTM D2879–83, 96, or 97 (incorporated by reference—see §60.17); or

(iii) Measured by an appropriate method approved by the Administrator; or

(iv) Calculated by an appropriate method approved by the Administrator.

(f) The owner or operator of each vessel storing a waste mixture of indeterminate or variable composition shall be subject to the following requirements.

(1) Prior to the initial filling of the vessel, the highest maximum true vapor pressure for the range of anticipated liquid compositions to be stored will be determined using the methods described in paragraph (e) of this section.

(2) For vessels in which the vapor pressure of the anticipated liquid composition is above the cutoff for

monitoring but below the cutoff for controls as defined in §60.112b(a), an initial physical test of the vapor pressure is required; and a physical test at least once every 6 months thereafter is required as determined by the following methods:

(i) ASTM D2879–83, 96, or 97 (incorporated by reference—see §60.17); or

(ii) ASTM D323–82 or 94 (incorporated by reference—see §60.17); or

(iii) As measured by an appropriate method as approved by the Administrator.

(g) The owner or operator of each vessel equipped with a closed vent system and control device meeting the specification of §60.112b or with emissions reductions equipment as specified in 40 CFR 65.42(b)(4), (b)(5), (b)(6), or (c) is exempt from the requirements of paragraphs (c) and (d) of this section.

[52 FR 11429, Apr. 8, 1987, as amended at 65 FR 61756, Oct. 17, 2000; 65 FR 78276, Dec. 14, 2000; 68 FR 59333, Oct. 15, 2003]

§ 60.117b Delegation of authority.

(a) In delegating implementation and enforcement authority to a State under section 111(c) of the Act, the authorities contained in paragraph (b) of this section shall be retained by the Administrator and not transferred to a State.

(b) Authorities which will not be delegated to States: §§60.111b(f)(4), 60.114b, 60.116b(e)(3)(iii), 60.116b(e)(3)(iv), and 60.116b(f)(2)(iii).

[52 FR 11429, Apr. 8, 1987, as amended at 52 FR 22780, June 16, 1987]

Indiana Department of Environmental Management
Office of Air Quality

Technical Support Document (TSD) for a Part 70 Operating Permit

Source Background and Description

Source Name:	INEOS USA, LLC
Source Location:	2357 Standard Avenue, Whiting, IN 46394
County:	Lake
SIC Code:	2821
Operation Permit No.:	T089-25489-00076
Permit Reviewer:	ERG/JR

The Office of Air Quality (OAQ) has reviewed a Title V application from INEOS USA LLC relating to the operation of an existing chemical plant that manufactures polybutene from a butane/butene mixture by a catalytic polymerization reaction using aluminum chloride as a catalyst.

Source Definition

This Source Definition from SSM 089-22011-00076, issued on March 20, 2006 was incorporated into this permit as follows:

In December 2005, Innovene USA LLC, a wholly owned subsidiary of BP, sold the Whiting chemical plant to INEOS. INEOS is a separate corporation that is not owned by BP. Due to this changed relationship, IDEM, OAQ has decided to reexamine whether the BP Whiting refinery and the INEOS chemical plant are part of the same major source.

The term “major source” is defined at 326 IAC 2-7-1(22). In order for these two plants to be considered one major source, they must meet all three of the following criteria:

(1) the plants must be under common control;
(2) the plants must have the same Standard Industrial Classification (SIC) Code or one must serve as a support facility for the other; and,
(3) the plants must be located on contiguous or adjacent properties.

IDEM, OAQ will first look at whether the two plants are under common control.

In 1996, IDEM adopted a nonrule policy document, Air-005-NPD, titled *Guidance on Definition of “Source” for Collocated Activities*. The guidance endorses two tests for determining whether common control exists when there is no common ownership. The tests consider the total relationship between the two plants. Common control exists if either test is satisfied.

The first test considers whether one plant is an auxiliary plant which directly serves the purpose of a primary plant and whether the owner or operator of the primary plant has a major role in the day-to-day operations of the auxiliary activity. Determining whether one plant has a major role in the day-to-day operations of the other is highly fact dependent.

In the case of the BP Whiting refinery and the INEOS chemical plant, neither plant has a major role in the day-to-day operations of the other plant. There is no contract between the two companies concerning the acceptance or usage of raw materials. Each plant is free to obtain raw materials from other sources. The chemical plant has obtained raw materials from other sources in the past when the refinery has been unable to supply it. Neither plant provides a majority of its

output to the other plant. Neither plant has the right to assume control of the other under any circumstance. Therefore, there is no common control under the first test.

The second test to determine common control is the but/for test. This test examines whether the auxiliary plant would exist absent the needs of the primary plant. This is an examination of whether the auxiliary plant is so dependent on the primary plant that if the primary plant were to cease operations, then the auxiliary would also have to shut down.

The INEOS chemical plant purchases steam, water, wastewater service and a raw material stream from the BP refinery. If the refinery were to cease operations, the chemical plant could continue to operate. It could purchase steam from Whiting Clean Energy and could purchase water and wastewater service from local utilities. As previously stated, the INEOS chemical plant can purchase raw materials from other sources and has done so in the past.

The BP refinery purchases a hydrocarbon stream from the chemical plant. It also sends by-products to the INEOS chemical plant's flare. The flared by-products come from the venting of rail cars and the depressurizing of drums. The refinery does not rely on the hydrocarbon stream in order to produce its principal products. The refinery does not rely on the INEOS flare. If the INEOS chemical plant were to cease operations, the refinery could continue to operate. The refinery has a procedure in place on what steps its employees take when the INEOS flare is unavailable. Neither plant is dependent on the other to operate. Since either plant could continue to operate if the other plant ceased operations, there is no common control under the but/for test.

Neither corporation owns the other corporation, or is owned by the same person or persons. INEOS has a corporate history and structure totally separate from BP. There are some former BP executives, as well as executives from other companies, that joined to form what is now INEOS. However, this employment history is insufficient to show common ownership.

Since there is no common ownership or common control, the BP refinery and the INEOS chemical plant fail to meet the first criteria of the definition of a major source. Therefore, there is no need to examine the other two criteria under the definition of major source. These two sources are not one major source.

Permitted Emission Units and Pollution Control Equipment

The source consists of the following permitted emission units and pollution control devices:

(a) One (1) chemical plant used to manufacture polybutene from a butane/butene mixture by a catalytic polymerization reaction. The maximum production capacity of the chemical plant is 250 million pounds of polybutene per year. The chemical plant consists of the following emission units:

(1) One (1) unloading rack, identified as EU-2 and constructed in 1982, used for unloading raw materials from trucks and rail cars;

(2) One (1) product shipping rack, identified as EU-3 and constructed in 1982, with a maximum capacity of 325 gallons per minute, used for loading trucks and railcars with finished product;

(3) One (1) process heater, identified as EU-4 and constructed in 1982, with a maximum heat input capacity of 10 MMBtu per hour and fired using process gas or natural gas;

(4) One (1) vapor recovery unit (VRU), identified as EU-5 and constructed in 1982, used to condense C_3-C_4 hydrocarbons from unreacted butane and butene. The condensible hydrocarbons are transferred via pipeline to the refinery or via pipeline to the rail loading/unloading rack system, while the non-condensible hydrocarbons are transferred to the process heater EU-4 for use as fuel. The

condensable and non-condensable hydrocarbons are routed to the PIB Flare during process upsets;

(5) One (1) rail loading/unloading rack system, identified as EU-7, constructed in 2006, including piping for butane/butene (BB) feed stock and spent BB, with a maximum capacity of 300 gallons per minute per car or a total of 2,084 cars per year, and consisting of six (6) rail loading/unloading locations on two (2) new rail sidings; and

(6) One (1) hydrotreater, identified as EU-8, constructed in 1991, with a maximum production capacity of 250 million pounds of polybutene per year.

VOC emissions from EU-2, EU-3, EU-5, EU-7, and EU-8 are controlled by the existing flare, identified as the PIB Flare. The PIB Flare has a maximum capacity of 540,000 pounds per hour of natural gas and process gas, and exhausts through stack SV-2. Emissions from the BP Whiting refinery's propylene loading and storage activities are also sent to the PIB Flare and combusted for VOC control. During VRU upsets, the condensible and non-condensible hydrocarbons from EU-5 are vented to the flare. Under NSPS, Subpart VV, the pumps, compressors, pressure relief devices in gas/vapor service, sampling connection systems, open-ended valves or lines, and valves of this process are considered to be affected facilities. Under NESHAP, Subpart FF, the benzene-containing hazardous waste stream(s) generated by the production of chemicals by chemical, thermal, physical, or biological processes for use as a product, co-product, by-product, or intermediate and is either treated, stored, or disposed of is considered to be an affected source.

(b) One (1) catalyst storage silo, identified as EU-1 and constructed in 1982, used to store aluminum chloride with a maximum throughput capacity of 228.31 pounds per hour, with particulate emissions controlled using a baghouse, which exhausts to stack SV-3.

Unpermitted Emission Units and Pollution Control Equipment

There are no unpermitted emission units operating at this source during this review process.

Insignificant Activities

The source also consists of the following insignificant activities, as defined in 326 IAC 2-7-1(21):

(a) Paved and unpaved roads and parking lots with public access. [326 IAC 6-4]

(b) Emissions from a laboratory, as defined in 326 IAC 2-7-1(21)(D).

(c) One (1) fuel dispensing operation with emissions less than the insignificant activity emission thresholds in 326 IAC 2-7-1(21)(A) through (C). The dispensing facility consists of the following two (2) storage tanks:

(A) One (1) 500 gallon portable gasoline storage tank.

(B) One (1) 250 gallon portable diesel storage tank.

(d) Degreasing operations that do not exceed 145 gallons per twelve (12) months, and not subject to 326 IAC 20-6 [326 IAC 8-3-2][326 IAC 8-3-8].

(e) Cleaners and solvents with a vapor pressure equal to or less than 0.3 psia at 100°F or 0.1 psia at 68°F and for which the combined use for all materials does not exceed 145 gallons per 12 months.

(f) Closed loop heating and cooling systems.

(g) Activities associated with the treatment of wastewater streams with an oil and grease content less than or equal to 1% by volume.

(h) Noncontact cooling tower systems with either natural draft or forced and induced draft systems not regulated under a NESHAP, including one (1) cooling tower (identified as RT601), constructed in 1982, with a maximum capacity of 15,000 gallons of water per minute.

(i) Repair activities including the following:

(1) Replacement or repair of ESPs, bags in baghouses, and filters in other air filtration equipment.

(2) Heat exchanger cleaning and repair.

(3) Process vessel degassing and cleaning to prepare for internal repairs.

(j) Equipment used to collect any material that might be released during a malfunction, process upset, or spill cleanup, including catch tanks, temporary liquid separators, tanks, and fluid handling equipment.

(k) Blowdown for boilers, cooling towers, compressors, or pumps.

(l) Other emission units, not regulated by a NESHAP, with PM10, NOx, and SO_2 emissions less than five (5) pounds per hour or twenty-five (25) pounds per day, CO emissions less than twenty-five (25) pounds per day, VOC emissions less than three (3) pounds per hour or fifteen (15) pounds per day, lead emissions less than six-tenths (0.6) tons per year or three and twenty-nine hundredths (3.29) pounds per day, and emitting greater than one (1) pound per day but less than five (5) pounds per day or one (1) ton per year of a single HAP, or emitting greater than one (1) pound per day but less than twelve and five tenths (12.5) pounds per day or two and five tenths (2.5) ton per year of any combination of HAPs:

(1) One (1) internal floating roof, above-ground storage tank (identified as RF-144) used to store light polymer, with a maximum storage capacity of 81,000 gallons. This storage tank was originally installed in 1982 and modified in 1996. [40 CFR 60, Subpart Kb] [326 IAC 12]

Under 40 CFR 60, Subpart Kb, storage tank RF-144 is considered to be new volatile organic liquid storage tank.

(2) Twenty-three (23) fixed roof dome, above-ground storage tanks, each installed in 1982, including the following:

(A) Two (2) storage tanks (identified as RF-101 and RF-102) used to store polybutene product, each with a maximum storage capacity of 163,002 gallons and using a nitrogen blanket to prevent water entrainment. [326 IAC 8-9]

(B) One (1) storage tank (identified as RF-104) used to store polybutene product, with a maximum storage capacity of 127,092 gallons and using a nitrogen blanket to prevent water entrainment. [326 IAC 8-9]

(C) Two (2) storage tanks (identified as RF-105 and RF-106) used to store polybutene product, each with a maximum storage capacity of 88,116 gallons respectively and using a nitrogen blanket to prevent water entrainment. [326 IAC 8-9]

(D) Ten (10) storage tanks (identified as RF-107, RF-108, RF-109, RF-110, RF-112, RF-113, RF-114, RF-117, RF-118, and RF-119) used to store polybutene product, each with a maximum storage capacity of 300,804 gallons and using a nitrogen blanket to prevent water entrainment. [326 IAC 8-9]

(E) One (1) storage tank (identified as RF-131) used to store polybutene product and hydrocarbons, with a maximum storage capacity of 23,940 gallons and using a nitrogen blanket to prevent water entrainment. [326 IAC 8-9]

(F) One (1) storage tank (identified as RF-132) used to store polybutene product and hydrocarbons, with a maximum storage capacity of 90,678 gallons and using a nitrogen blanket to prevent water entrainment. [326 IAC 8-9]

(G) One (1) storage tank (identified as RF-133) used to store polybutene product, with a maximum storage capacity of 23,940 gallons and using a nitrogen blanket to prevent water entrainment. [326 IAC 8-9]

(H) One (1) storage tank (identified as RF-134) used to store polybutene product, with a maximum storage capacity of 90,678 gallons and using a nitrogen blanket to prevent water entrainment. [326 IAC 8-9]

(I) Two (2) storage tanks (identified as RF-141 and RF-142) used to store polybutene product, each with a maximum storage capacity of 127,092 gallons and using a nitrogen blanket to prevent water entrainment. [326 IAC 8-9]

(J) One (1) storage tank (identified as RF-143) used to store polybutene, with a maximum storage capacity of 127,092 gallons and using a nitrogen blanket to prevent water entrainment. [326 IAC 8-9]

(K) One (1) storage tank (identified as RF-145) used to store slop, with a maximum storage capacity of 88,000 gallons and using a nitrogen blanket to prevent water entrainment. [326 IAC 8-9]

(3) Pressurized hot oil storage drum (identified as SD-128), with a reservoir capacity of 6,765 gallons, and the associated hot oil system.

(4) Pressurized neutralizer storage drum (identified as SD-134), with a capacity of 1,128 gallons.

Existing Approvals

This existing chemical plant submitted an application for a Part 70 Operating Permit on September 23, 1996. The chemical plant is operating under the following approvals:

(1) Registration issued on November 2, 1981 (no permit number assigned).

(2) Registration issued on September 21, 1984 (no permit number assigned).

(3) Construction Permit No. 089-2108-00076, issued on July 3, 1991.

(4) Significant Source Modification No. 089-22011-00076, issued on March 20, 2006.

All conditions from previous approvals were incorporated into this Part 70 permit.

Enforcement Issue

There are no enforcement actions pending.

Recommendation

The staff recommends to the Commissioner that the Part 70 permit be approved. This recommendation is based on the following facts and conditions:

Unless otherwise stated, information used in this review was derived from the application and additional information submitted by the applicant.

An administratively complete Part 70 Operating Permit application for the purposes of this review was received on September 23, 1996. Additional information was received on September 22, 2006, September 28, 2006, October 5, 2006, February 7, 2007, August 15, 2007, September 12, 2007, and September 17, 2007.

Emission Calculations

See Appendix A of this document for detailed emission calculations (Appendix A, pages 1 through 28).

Potential to Emit of the Source

Pursuant to 326 IAC 2-1.1-1(16), Potential to Emit is defined as "the maximum capacity of a stationary source or emissions unit to emit any air pollutant under its physical and operational design. Any physical or operational limitation on the capacity of a source to emit an air pollutant, inclulding air pollution control equipment and restrictions on hours of operation or type or amount of material combusted, stored, or processed shall be treated as part of its design if the limitation is enforceable by the U.S. EPA, the department, or the appropriate local air pollution control agency."

Pollutant	Potential to Emit (tons/yr)
PM	9.3
PM-10	8.4
SO_2	0.1
VOC	4,381
CO	45.6
NO_x	56.8

HAPs	Potential to Emit (tons/yr)
Single HAP	15.0 (1,3 Butadiene)
Combination HAPs	15.4

(a) The potential to emit (as defined in 326 IAC 2-7-1(29)) of VOC is equal to or greater than 100 tons per year. Therefore, the source is subject to the provisions of 326 IAC 2-7. Therefore, the source is subject to the provisions of 326 IAC 2-7.

(b) The potential to emit (as defined in 326 IAC 2-7-1(29)) of any single HAP is equal to or greater than ten (10) tons per year. Therefore, the source is subject to the provisions of 326 IAC 2-7. Therefore, the source is subject to the provisions of 326 IAC 2-7.

(c) Fugitive Emissions
Since this type of operation is one of the twenty-eight (28) listed source categories under 326 IAC 2-2, the fugitive emissions are counted toward determination of PSD and Emission Offset applicability.

County Attainment Status

The source is located in Lake County.

Pollutant	Status
PM	Attainment
PM10	Maintenance Attainment
PM2.5	Nonattainment
SO_2	Attainment
NO_2	Attainment
8-hour Ozone	Moderate Nonattainment
CO	Maintenance Attainment
Lead	Attainment

(a) U.S.EPA in Federal Register Notice 70 FR 943 dated January 5, 2005 has designated Lake County as nonattainment for PM2.5. On March 7, 2005 the Indiana Attorney General's Office on behalf of IDEM filed a law suit with the Court of Appeals for the District of Columbia Circuit challenging U.S. EPA's designation of non-attainment areas without sufficient data. However, in order to ensure that sources are not potentially liable for violation of the Clean Air Act, the OAQ is following the U.S. EPA's guidance to regulate PM10 emissions as surrogate for PM2.5 emissions pursuant to the Nonattainment New Source Review requirements. See the State Rule Applicability for the source section.

(b) On October 25, 2006, the Indiana Air Pollution Control Board finalized a rule revision to 326 IAC 1-4-1 redesignating Lake County to attainment for the sulfur dioxide standard and revoking the one-hour ozone standard in Indiana. However, on December 22, 2006 the United States Court of Appeals, District of Columbia issued a decision which served to partially vacate and remand the U.S. EPA's final rule for implementation of the eight-hour National Ambient Air quality Standard for ozone. *South Coast Air Quality Mgmt. Dist. v. EPA*, 472 F.3d 882 (D.C. Cir., December 22, 2006), *rehearing denied* 2007 U.S. App. LEXIS 13748 (D.C. Cir., June 8, 2007). The U.S. EPA has instructed IDEM to issue permits in accordance with its interpretation of the *South Coast* decision as follows: Lake County was previously designated as a severe non-attainment area prior to revocation of the one-hour ozone standard, therefore, pursuant to the anti-backsliding provisions of the Clean Air Act, any new or existing source must be subject to the major source applicability cut-offs and offset ratios under the area's previous one-hour standard designation. This means that a source must achieve the Lowest Achievable Emission Rate (LAER) if it exceeds 25 tons per year of VOC emissions and must offset any increase in VOC emissions by a decrease of 1.3 times that amount.

On January 26, 1996 in 40 CFR 52.777(i), the U.S. EPA granted a waiver of the requirements of Section 182(f) of the CAA for Lake and Porter Counties, including the lower NOx threshold for nonattainment new source review. Therefore, VOC emissions alone are considered when evaluating the rule applicability relating to the 1-hour ozone standards. Therefore, VOC emissions were reviewed pursuant to the requirements for nonattainment new source review. See the State Rule Applicability for the source section.

VOC and NOx emissions are considered when evaluating the rule applicability relating to the 8-hour ozone standard. Lake County has been designated as nonattainment for the 8-hour ozone standard. Therefore, VOC and NOx emissions were reviewed pursuant to the requirements for Emission Offset, 326 IAC 2-3. See the State Rule Applicability – Entire Source section.

(c) Lake County has been classified as attainment or unclassifiable in Indiana for PM10, SO_2, NO_2, CO, and Lead. Therefore, these emissions were reviewed pursuant to the requirements for Prevention of Significant Deterioration (PSD), 326 IAC 2-2. See the State Rule Applicability for the source section.

(d) Fugitive Emissions
Since this source is classified as a chemical plant, it is considered one of the 28 listed source categories under 326 IAC 2-2 or 2-3; therefore, fugitive particulate matter (PM) and volatile organic compound (VOC) emissions are counted toward determination of PSD and Emission Offset applicability.

Part 70 Permit Conditions

This source is subject to the requirements of 326 IAC 2-7, pursuant to which the source has to meet the following:

(a) Emission limitations and standards, including those operational requirements and limitations that assure compliance with all applicable requirements at the time of issuance of Part 70 permits.

(b) Monitoring and related record keeping requirements which assure that all reasonable information is provided to evaluate continuous compliance with the applicable requirements.

Federal Rule Applicability

(a) New Source Performance Standards (326 IAC 12 and 40 CFR Part 60):

(1) Storage tank RF-144 is subject to the requirements of 40 CFR 60, Subpart Kb - Standards of Performance for Volatile Organic Liquid Storage Vessels (Including Petroleum Liquid Storage Vessels) for Which Construction, Reconstruction, or Modification Commenced After July 23, 1984 (326 IAC 12), because this storage tank was modified in 1996 and is used to store a volatile organic liquid. This storage tank has a storage capacity greater than 39,898 gallons and is used to store a volatile organic liquid that has a maximum true vapor pressure of 10 psia.

The maximum true vapor pressure of storage tank RF-144 is greater than 5.2 kPa (0.75 psia) and less than 76.6 kPa (11.1 psia). Storage tank RF-144 uses a fixed roof in combination with an internal floating roof and two foam seals to comply with the requirements in 40 CFR 60, Subpart Kb.

Nonapplicable portions of the NSPS will not be included in the permit. This tank is subject to the following portions of 40 CFR 60, Subpart Kb.

(1) 40 CFR 60.110b(a) and (b)
(2) 40 CFR 60.111b
(3) 40 CFR 60.112b(a)(1)
(4) 40 CFR 60.113b(a)
(5) 40 CFR 60.115b(a)
(6) 40 CFR 60.116b(a – e)
(7) 40 CFR 60.117b

The provisions of 40 CFR 60 Subpart A – General Provisions, which are incorporated as 326 IAC 12, apply to RF-144, except when otherwise specified in 40 CFR 60, Subpart Kb.

The New Source Performance Standards for Volatile Organic Liquid Storage Vessels for which construction, reconstruction, or modification commenced after July 23, 1984 (326 IAC 12, 40 CFR 60.110b - 117b, Subpart Kb) are not included for storage vessels RF-101, RF-102, RF-104 through RF-110, RF-112 through RF-114, RF-117 through RF-119, RF-131 through RF-134, RF-141 through RF-143, and RF-145. These storage tanks were constructed prior to July 23, 1984.

(2) This chemical plant was constructed after January 5, 1981 and is used to manufacture polybutenes (CAS #9003-29-6), which is one of the chemicals listed in 40 CFR 60.489 (List of Chemicals Produced by Affected Facilities). Therefore, this chemical plant is subject to the requirements of New Source Performance Standards for Volatile Organic Liquid Storage Vessels for Equipment Leaks of VOC in the Synthetic Organic Chemicals Manufacturing Industry (326 IAC 12; 40 CFR 60.480 - 489, Subpart VV).

Nonapplicable portions of the NSPS will not be included in the permit. Pumps, compressors, pressure relief devices, sampling connection systems, and valves are subject to the following portions of 40 CFR 60, Subpart VV.

(1) 40 CFR 60.480(a)
(2) 40 CFR 60.480(b)
(3) 40 CFR 60.480(c)
(4) 40 CFR 60.481
(5) 40 CFR 60.482-1
(6) 40 CFR 60.482-2
(7) 40 CFR 60.482-3
(8) 40 CFR 60.482-4
(9) 40 CFR 60.482-5
(10) 40 CFR 60.482-6
(11) 40 CFR 60.482-7
(12) 40 CFR 60.482-8
(13) 40 CFR 60.482-9
(14) 40 CFR 60.482-10
(15) 40 CFR 60.483-1
(16) 40 CFR 60.483-2
(17) 40 CFR 60.485
(18) 40 CFR 60.486
(19) 40 CFR 60.487

(3) Although constructed between May 18, 1978 and July 23, 1984, the requirements of 40 CFR 60, Subpart Ka - Standards of Performance for Storage Vessels for Petroleum Liquids for Which Construction, Reconstruction, or Modification Commenced After May 18, 1978, and Prior to July 23, 1984, are not included in this permit for storage tanks RF-101, RF-102, RF-104 through RF-110, RF-112 though RF-114, RF-117 through RF-119, RF-131 through RF-134, RF-141 through RF-143, and RF-145. These storage tanks are not used to store petroleum liquids.

The requirements of 40 CFR 60, Subpart Ka - Standards of Performance for Storage Vessels for Petroleum Liquids for Which Construction, Reconstruction, or Modification Commenced After May 18, 1978, and Prior to July 23, 1984, are not included in this permit for storage tank RF-144. The storage tank was constructed after July 23, 1984.

(4) The requirements of 40 CFR 60, Subpart III - Standards of Performance for Volatile Organic Compound (VOC) Emissions from the Synthetic Organic Chemical Manufacturing Industry (SOCMI) Air Oxidation Unit Process (326 IAC 12) are not included in this permit. The chemical plant has not been modified after October 21, 1983 and does not produce any of the chemicals listed in 40 CFR 60.617 as a product, co-product, by-product or intermediate.

(5) The requirements of 40 CFR 60, Subpart NNN - Standards of Performance for Volatile Organic Compounds (VOC) Emissions From Synthetic Organic Chemical Manufacturing Industry (SOCMI) Distillation Operations (326 IAC 12) are not included in this permit. The chemical plant has not been modified after

December 30, 1983 and does not produce any of the chemicals listed in 40 CFR 60.667 as a product, co-product, by-product or intermediate.

(6) The requirements of 40 CFR 60, Subpart RRR - Standards of Performance for Volatile Organic Compound Emissions from Synthetic Organic Chemical Manufacturing Industry (SOCMI) Reactor Processes (326 IAC 12) are not included in this permit. The chemical plant has not been modified after June 29, 1990 and does not produce any of the chemicals listed in §60.707 as a product, co-product, by-product, or intermediate.

(b) National Emission Standards for Hazardous Air Pollutants:

(1) Although the source does not use or produce benzene, the chemical plant does produce chemicals by a chemical process for use as a product and, thus, meets the definition of a chemical manufacturing plant in 40 CFR 61.341. Therefore, the chemical plant is subject to the National Emission Standards for Benzene Waste Operations (326 IAC 14; 40 CFR 61, Subpart FF). The Benzene quantity from facility waste is less than 1.1 tons per year; therefore, there are no applicable control requirements. However, the Permittee must comply with recordkeeping and reporting requirements specified in 40 CFR 61.356(b) and 61.357(c) to show that the Benzene quantity from facility waste stays below 1.1 tons per year.

Nonapplicable portions of the NESHAP will not be included in the permit. The existing chemical plant is subject to the following portions of 40 CFR 61, Subpart FF:

(1) 40 CFR 61.340(a)
(2) 40 CFR 61.340(c)
(3) 40 CFR 61.340(d)
(4) 40 CFR 61.341
(5) 40 CFR 61.342(a)
(6) 40 CFR 61.342(g)
(7) 40 CFR 61.350
(8) 40 CFR 61.355(a)(1) and (2)
(9) 40 CFR 61.355(a)(5) and (6)
(10) 40 CFR 61.355(b)(1)
(11) 40 CFR 61.355(b)(4)
(12) 40 CFR 61.355(b)(5)
(13) 40 CFR 61.355(b)(6)
(14) 40 CFR 61.355(b)(7)
(15) 40 CFR 61.355(c)(1)(i)(A)
(16) 40 CFR 61.355(c)(1)(i)(D)
(17) 40 CFR 61.355(c)(2)
(18) 40 CFR 61.355(c)(3)
(19) 40 CFR 61.356(a)
(20) 40 CFR 61.356(b)(1)
(21) 40 CFR 61.356(b)(5)
(22) 40 CFR 61.357(a)
(23) 40 CFR 61.357(b)
(24) 40 CFR 61.358

The provisions of 40 CFR 61 Subpart A – General Provisions, which are incorporated as 326 IAC 20-1-1, apply to the facility described in this section except when otherwise specified in 40 CFR 61, Subpart FF.

(2) The requirements of 40 CFR 61, Subpart J, National Emission Standards for Equipment Leaks (Fugitive Emission Sources) of Benzene are not included in this permit. Although the chemical plant contains the types of components listed

in 40 CFR 61.110(a), none of the equipment at the chemical plant operates in benzene service as defined by 40 CFR 61.111. The feedstock, the spent feedstock, and the products do not contain 10 percent or more benzene by weight.

(3) The requirements of 40 CFR 61, Subpart V, National Emission Standard for Equipment Leaks (Fugitive Emission Sources) are not included in this permit. Although the chemical plant contains the types of components listed in 40 CFR 61.240(a), none of the equipment at the chemical plant operates in volatile hazardous air pollutant service as defined in 40 CFR 61.241. Also, the feedstock, the spent feedstock, and the products do not contain 10 percent or more of a volatile HAP by weight. The chemical plant manufactures polybutene from a butane/butene mixture using a catalytic polymerization reaction (SIC Code 2821, NAICS Code 325211).

(4) The requirements of 40 CFR 63, Subparts F, G, H, or I, National Emission Standards for Organic Hazardous Air Pollutants from the Synthetic Organic Chemical Manufacturing Industry are not included in this permit. The chemical plant does not manufacture as primary product any of the chemicals listed in 40 CFR 63.100(b)(1). The source also does not use as a reactant or manufacture as a product, or co-product any of the chemicals listed in Table 2 of 40 CFR 63, Subpart F.

(5) The requirements of 40 CFR 63, Subpart Q - National Emission Standards for Hazardous Air Pollutants for Industrial Process Cooling Towers (326 IAC 14) are not included in this permit. The cooling tower does not use chromium-based water treatment chemicals.

(6) The requirements of 40 CFR 63, Subpart T - National Emission Standards for Halogenated Solvent Cleaning are not included in this permit. The parts cleaner solvent does not contain any of the halogen compounds listed in 40 CFR 63, Subpart T.

(7) The requirements of 40 CFR 63, Subpart FFFF - National Emission Standards of Hazardous Air Pollutants: Miscellaneous Organic Chemical Manufacturing are not included in this permit. The compliance date for this rule for existing sources is May 10, 2008. The source has accepted federally enforceable limits prior to the compliance date of this rule such that HAP emissions from the entire source are limited to less than ten (10) tons per year for a single HAP and less than twenty-five (25) tons per year for total combined HAPs.

(8) The process heater EU-4 would have been subject to the requirements of the National Emission Standards for Hazardous Air Pollutants for Industrial, Commercial, and Institutional Boilers and Process Heaters, 40 CFR 63, Supbart DDDDD. However, on June 8, 2007, the United States Court of appeals for the District of Columbia Circuit (in NRDC v. EPA, no. 04-1386) vacated in its entirety the National Emission Standards for Hazardous Air Pollutants for Industrial, Commercial, and Institutional Boilers and Process Heaters, 40 CFR 63, Supbart DDDDD. Additionally, since the state rule at 326 IAC 20-95 incorporated the requirements of the NESHAP 40 CFR 63, Subpart DDDDD by reference, the requirements of 326 IAC 20-95 are no longer effective. Therefore, the requirements of 40 CFR 63, Subpart DDDDD and 326 IAC 20-95 are not included in the permit.

State Rule Applicability – Entire Source

326 IAC 2-2 (Prevention of Significant Deterioration), 326 IAC 2-3 (Emission Offset), and 326 IAC 2-1.1-5 (Nonattainment NSR):

The chemical plant (previously owned by Amoco Chemicals Corporation) was constructed adjacent to the refinery (previously owned by Amoco Oil Refinery) in 1982. Based on the registration issued on November 4, 1981, IDEM, OAQ considered the refinery and the chemical plant to be separate sources at the time of the construction of the chemical plant. The chemical plant when built had potential uncontrolled VOC and CO emissions greater than 100 tons per year. The source should have taken VOC and CO limits to render PSD requirements not applicable. However, the chemical plant used a flare to control emissions which kept the VOC below 100 tons per year; actual VOC emissions never exceeded 100 tons per year. The majority of CO potential emissions were from the standby air compressor RC-402 (natural gas-fired) and it was only used on site in case the normal electric compressor was not operational. The maximum use of the compressor in a 12 month period was 1000 hours. This resulted in CO emissions of 7.90 tons for that period. In September 2007, the source permanently removed the air compressor RC-402 from operation.

On November 15, 1990, Lake County was designated as severe nonattainment for the 1-hour ozone standard. The chemical plant was, therefore considered a minor source for CO under 326 IAC 2-2 and a major source for VOC under 326 IAC 2-3. On July 3, 1991, a registration was issued for the hydrotreater, identified as EU-8. The potential to emit of this construction was greater than the major Emission Offset threshold of 25 tons per year VOC. The source should have taken VOC limits to render Emission Offset requirements not applicable. However, the same flare controlling the chemical plant was also used to control emissions from the hydrotreater which kept the VOC from the hydrotreater below 25 tons per year; actual VOC emissions never exceeded 25 tons per year.

On April 30, 2004, the EPA issued a final rule establishing 8-hour ozone designations and classifications for every area in the U.S. Lake County was designated as a moderate nonattainment area for the 8-hour ozone standard. On June 15, 2004, Indiana's designations and classifications for the 8-hour ozone standard became effective. At that point, the source became a major source under 326 IAC 2-1.1-5 (Nonattainment New Source Review). On November 12, 2004, the 8-hour ozone nonattainment designation was fully incorporated into Indiana's SIP and state rules. As a result, the source was a major source under 326 IAC 2-3 for both 1-hour and 8-hour ozone standards.

On March 20, 2006, SSM 089-22011-00076 was issued for the construction and operation of a new rail loading/unloading rack system, identified as EU-7 (including the associated piping for butane/butene (BB) feed stock and spent BB). At the time of this modification, Lake County was designated as severe nonattainment for the 1-hour ozone standard. The potential to emit VOC before control (the flare) from EU-7 is 176 tons per year. Based on the evaluation of the VOC de minimis determination submitted by the Permittee, there were no contemporaneous VOC increases from calendar years January 2000 to December 2005 (this information was verified through the OAQ's permit database); and the total increase in VOC emissions for the past five (5) years is less than the de minimis level. The PIB flare is required to make 326 IAC 2-3 not applicable.

This area is nonattainment for PM2.5. The potential to emit of PM10 from the construction and operation of the rail loading/unloading rack system, identified as EU-7 was less than fifteen (15) tons per year. Therefore, assuming that PM10 emissions represent PM2.5 emissions, 326 IAC 2-1.1-5 (Nonattainment New Source Review) did not apply for PM2.5 for the construction and operation of the rail loading/unloading rack system.

On October 25, 2006, the Indiana Air Pollution Control Board finalized a rule revision to 326 IAC 1-4-1 revoking the 1-hour ozone standard in Indiana. As previously discussed on page 7, the United States Court of Appeals, District of Columbia issued a decision that partially vacates and remands the 8-hour standard for ozone. Therefore, the previous cut-offs and offset ratios for one-hour standard designation must be used. As a result, the source remains a major source under 326 IAC 2-3.

326 IAC 2-4.1 (New Source Toxics Control)

Pursuant to 326 IAC 2-4.1-1(a), this rule applies to the construction or reconstruction of a major source of HAPs (as defined in 40 CFR 63.41) that occurs after July 27, 1997. Therefore, the requirements of 326 IAC 2-4.1 are not applicable to the chemical plant since it was constructed prior to July 27, 1997 and has not constructed or reconstructed a major source of HAPs.

The post July 27, 1997 construction of the rail loading/unloading rack system has the potential to emit less than ten (10) tons per year for a single HAP and less than twenty-five (25) tons per year for a combination of HAPs. Therefore, 326 IAC 2-4.1 does not apply to the the rail loading/unloading rack system.

326 IAC 2-6 (Emission Reporting)

This source is subject to 326 IAC 2-6 (Emission Reporting), because it is located in Lake County and has the potential to emit greater than twenty five (25) tons per year VOC. Pursuant to this rule, the Permittee shall submit an annual emission statement certified pursuant to the requirements of 326 IAC 2-6. This statement must be received in accordance with the compliance schedule specified in 326 IAC 2-6-3 and must comply with the minimum requirements specified in 326 IAC 2-6-4. The submittal should cover the period identified in 326 IAC 2-6.

326 IAC 5-1 (Opacity Limitations)

Pursuant to 326 IAC 5-1-2 (Opacity Limitations), except as provided in 326 IAC 5-1-3 (Temporary Alternative Opacity Limitations), opacity shall meet the following, unless otherwise stated in this permit:

(a) Opacity shall not exceed an average of twenty percent (20%) opacity in twenty-four (24) consecutive readings as determined by 326 IAC 5-1-4,

(b) Opacity shall not exceed sixty percent (60%) for more than a cumulative total of fifteen (15) minutes (sixty (60) readings as measured according to 40 CFR 60, Appendix A, Method 9 or fifteen (15) one (1) minute nonoverlapping integrated averages for a continuous opacity monitor) in a six (6) hour period.

326 IAC 6-4 (Fugitive Dust Emissions)

The Permittee shall not allow fugitive dust to escape beyond the property line or boundaries of the property, right-of-way, or easement on which the source is located, in a manner that would violate 326 IAC 6-4 (Fugitive Dust Emissions).

326 IAC 6-5 (Fugitive Particulate Matter Emission Limitations)

This source is not subject to the requirements of 326 IAC 6-5 because it is located in Lake County and does not have fugitive emissions greater than 25 tons per year.

326 IAC 6.8-10-1 (Lake County Fugitive Particulate Matter)

The potential fugitive particulate emissions, as defined in 326 IAC 6.8-10-2, from the paved roads at this source are less than 5 tons/yr. Therefore, the requirements of 326 IAC 6.8-10-1 are not applicable.

326 IAC 6.8-11-1 (Lake County Particulate Matter Contingency Measures)

The potential PM10 emissions from the source are less than 10 tons/yr. Therefore, the requirements of 326 IAC 6.8-11-1 are not applicable.

326 IAC 8-7 (Specific VOC Reduction Requirements for Lake, Porter, Clark, and Floyd Counties)

The chemical plant is not subject to the requirements of 326 IAC 8-7 because Synthetic Organic Chemical manufacturing industry reactors and distillation units and volatile organic liquid storage are exempt under 326 IAC 8-7-2(a)(3)(E), (F), and (Q).

State Rule Applicability – Individual Facilities

326 IAC 6-2-2 (Particulate Matter - Sources of Indirect Heating)

The hot oil furnace, identified as EU-4, is subject to the requirements of 326 IAC 6-2-2(c) (Particulate Emission Limitation for Sources of Indirect Heating) because the source is located in Lake County and the hot oil furnace is an indirect heating unit that began operation after June 8, 1972, and before September 21, 1983.

Pursuant to 326 IAC 6-2-2(c) (Particulate Emission Limitations for Sources of Indirect Heating), the PM emissions from EU-4 are limited to 0.60 pounds per MMBtu heat input.

This limitation is based on the following equation:

$$Pt = \frac{0.87}{Q^{0.16}}$$

where

Pt = emission rate limit (lbs/MMBtu)
Q = total source heat input capacity (MMBtu/hr) (10 MMBtu/hr)

A PM emission limit of 0.60 lbs/MMBtu is equivalent to 62.9 lbs/hr (0.60 lbs/MMBtu x 10 MMBtu/hr = 6.0 lbs/hr) of PM emissions from the hot oil furnace. According to the emission calculations in Appendix A, the total PM emission from EU-4 is 0.02 lbs/hr. Therefore, this unit is capable of complying with the PM requirements in 326 IAC 6-2-2.

326 IAC 6-3 (Particulate Emission Limitations for Manufacturing Processes)

(a) Pursuant to 326 IAC 6-3-2, particulate emissions from the Catalyst Storage Silo (EU-1) shall not exceed 0.958 pound per hour.

The pound per hour limitation was calculated using the following equation:

Interpolation of the data for the process weight rate up to sixty thousand (60,000) pounds per hour shall be accomplished by use of the equation:

$E = 4.10\ P^{0.67}$ where E = rate of emission in pounds per hour and
P = process weight rate in tons per hour

Based on the calculations provided on page 1 of Appendix A, the Catalyst Storage Silo (EU-1) can comply with this limit.

(b) Pursuant to 326 IAC 6-3-1(b)(11), particulate emissions from the noncontact cooling tower (RT601) are exempt from the requirements of 326 IAC 6-3.

326 IAC 6.8-1-2 (Particulate Matter Limitations for Lake County)

Although this source is located in Lake County, it is not subject to the requirements of 326 IAC 6.8-1-2 because it is does not have a potential to emit 100 tons per year of particulate matter and does not have actual emissions of particulate matter greater than ten (10) tons per year.

326 IAC 7-1.1-2 (Sulfur Dioxide Emission Limitations)

The process heater, identified as EU-4, is not subject to 326 IAC 7-1.1-2 because the potential to emit sulfur dioxide for this emission unit is less than 25 tons per year and 10 pounds per hour.

326 IAC 7-4-1.1(Lake County Sulfur Dioxide Emission Limitations)

The process heater, identified as EU-4, is not subject to 326 IAC 7-4-1.1 because the process heater is not one of the listed emission units.

326 IAC 8-1-6 (New Facilities: General Reduction Requirements)

(a) The chemical plant (EU-2, EU-3, EU-5, EU-7, and EU-8) is subject to the requirements of 326 IAC 8-1-6 because it was constructed after January 1, 1980 and the potential emissions before controls are greater than 25 tons per year. BACT was not addressed at the time of initial construction for EU-2, EU-3, EU-5, and EU-8; however, the source did install a flare to control VOC emissions. Based on the information in Appendix B, BACT for the chemical plant has been determined to be the following:

(1) The VOC emissions from the chemical plant (EU-2, EU-3, EU-5, and EU-8) shall be controlled by the existing flare (PIB Flare).

(2) The overall control efficiency of PIB Flare shall be at least 99% when controlling the VOC emissions from the chemical plant.

Note: BACT has recently been evaluated in SSM 089-22011-00076, issued on March 20, 2006, to be 99% control efficiency of the flare for the rail loading/unloading rack system, identified as EU-7 (see below).

(b) The rail loading/unloading rack system, identified as EU-7, is subject to the requirements of 326 IAC 8-1-6 because it was constructed after January 1, 1980 and the potential emissions before controls are greater than 25 tons per year. The following conditions are included in the permit:

Pursuant to 326 IAC 8-1-6, the Permittee shall comply with the following VOC best available control technology (BACT) standards and limitations:

(1) The existing flare (PIB Flare) shall be utilized to control the VOC emissions from the rail loading/unloading rack system (EU-7).

(2) The overall control efficiency of PIB Flare shall be at least 99% when controlling the VOC emissions from the rail loading/unloading rack system (EU-7).

Compliance with these requirements will also make the Emission Offset requirements under 326 IAC 2-3 not applicable for VOC emissions to the construction of the rail loading/unloading rack system, identified as EU-7.

(c) Although constructed after January 1, 1980, the cooling tower (RT 601) and the hot oil furnace (EU-4) are not subject to the requirements of 326 IAC 8-1-6 because the potential emissions of volatile organic compounds are each less than 25 tons per year.

326 IAC 8-3-2 (Cold Cleaner Operations)

The source is located in Lake County, has a potential to emit greater than 100 tons per year of VOC, and performs organic solvent degreasing operations; therefore, pursuant to 326 IAC 8-3-2 (Cold Cleaner Operations), for cold cleaning operations constructed after January 1, 1980, the Permittee shall:

(a) Equip the cleaner with a cover;

(b) Equip the cleaner with a facility for draining cleaned parts;

(c) Close the degreaser cover whenever parts are not being handled in the cleaner;

(d) Drain cleaned parts for at least fifteen (15) seconds or until dripping ceases;

(e) Provide a permanent, conspicuous label summarizing the operation requirements;

(f) Store waste solvent only in covered containers and not dispose of waste solvent or transfer it to another party, in such a manner that greater than twenty percent (20%) of the waste solvent (by weight) can evaporate into the atmosphere.

326 IAC 8-3-8 (Material requirements for cold cleaning degreasers)

The source is located in Lake County, and uses solvent for use in cold cleaning degreasers; therefore this rule applies. Pursuant to 326 IAC 8-3-8, the Permittee shall not operate a cold cleaning degreaser with a solvent vapor pressure that exceeds one (1) millimeter of mercury (nineteen-thousandths (0.019) pound per square inch) measured at twenty (20) degrees Celsius (sixty-eight (68) degrees Fahrenheit). The Permittee shall maintain each of the following records for each purchase:

(a) The name and address of the solvent supplier;

(b) The date of purchase;

(c) The type of solvent;

(d) The volume of each unit of solvent;

(e) The total volume of the solvent;

(f) The true vapor pressure of the solvent measured in millimeters of mercury at twenty (20) degrees Celsius (sixty-eight (68) degrees Fahrenheit).

All records shall be retained on-site for the most recent three (3) year period and shall be reasonably accessible for an additional two (2) year period.

326 IAC 8-6 (Organic Solvent Emission Limitations)

Although located in Lake County, this source was constructed after January 1, 1980. Therefore, the source is not subject to the requirements of 326 IAC 8-6.

326 IAC 8-9 (Volatile Organic Liquid Storage Vessels)

Storage tank RF-144 located at the chemical plant is not subject to the requirements of 326 IAC 8-9 because this storage tank is subject to the requirements of 40 CFR 60, Subpart Kb (326 IAC 12). Pursuant to 326 IAC 8-9-2(8) storage tanks subject to 40 CFR 60, Subpart Kb are exempt from this rule.

Storage tanks RF-101, RF-102, RF-104 through RF-110, RF-112 though RF-114, RF-117 through RF-119, RF-131 through RF-134, RF-141 through RF-143, and RF-145 are subject to the requirements of 326 IAC 8-9 because they are located in Lake County and are used to store a volatile organic liquid. Since storage vessels RF-131 and RF-133 have storage capacities less than 39,000 gallons, these tanks are subject to the requirements of 326 IAC 8-9-6(a) and (b). These rules require the source to maintain records of the vessel identification number, dimensions, and capacity. The remaining storage vessels have storage capacities greater than 39,000 gallons but vapor pressure of the stored material is less than 0.5 psia. Therefore, RF-101, RF-102, RF-104 through RF-110, RF-112 though RF-114, RF-117 through RF-119, RF-134, RF-141 through RF-143, and RF-145 are subject to the requirements 326 IAC 8-9-6(h) in addition to 326 IAC 8-9-6(a) and (b). 326 IAC 8-9-6(h) requires the source to maintain records and notify IDEM, OAQ within 30 days when the maximum true vapor pressure of the liquid exceeds 0.75 psia.

Testing Requirements

There are no testing requirements for the PIB Flare. To demonstrate compliance with the PSD minor and Emission Offset limits, the Permittee shall comply with 40 CFR 60.18 for the PIB Flare.

Compliance Requirements

Permits issued under 326 IAC 2-7 are required to ensure that sources can demonstrate compliance with applicable state and federal rules on a more or less continuous basis. All state and federal rules contain compliance provisions, however, these provisions do not always fulfill the

requirement for a more or less continuous demonstration. When this occurs IDEM, OAQ in conjunction with the source, must develop specific conditions to satisfy 326 IAC 2-7-5. As a result, compliance requirements are divided into two sections: Compliance Determination Requirements and Compliance Monitoring Requirements.

Compliance Determination Requirements in Section D of the permit are those conditions that are found more or less directly within state and federal rules and the violation of which serves as grounds for enforcement action. If these conditions are not sufficient to demonstrate continuous compliance, they will be supplemented with Compliance Monitoring Requirements, also in Section D of the permit. Unlike Compliance Determination Requirements, failure to meet Compliance Monitoring conditions would serve as a trigger for corrective actions and not grounds for enforcement action. However, a violation in relation to a compliance monitoring condition will arise through a source's failure to take the approporiate corrective actions within a specific time period.

The compliance monitoring requirements applicable to this source are as follows:

(a) The Permittee shall comply with the requirements of 40 CFR 60.18 for the PIB Flare.

(b) The steam control valve that supplies steam to the PIB Flare shall be operated according to the manufacturer's operation and maintenance manual to vary steam flow with waste gas flow.

These monitoring conditions are necessary because the PIB Flare must operate properly at all times that the chemical plant is in operation to ensure compliance with 326 IAC 2-2 (PSD), 326 IAC 2-3 (Emission Offset), and 326 IAC 8-1-6 (BACT).

Conclusion

The operation of this existing chemical plant that manufactures polybutene from a butane/butene mixture by a catalytic polymerization reaction using aluminum chloride as a catalyst shall be subject to the conditions of this Part 70 permit 089-25489-00076.

Appendix A: Emission Calculations
PM and PM10 Emissions
From Catalyst Storage Silo (EU-1)

Company Name: INEOS USA LLC
Address: 2357 Standard Avenue
Part 70: 089-25489-00076
Reviewer: ERG/JR
Date: February 9, 2007

Potential to Emit PM/PM10 - Captured Emissions:

Max Amount Catalyst Received: 2 MMlbs/yr

Baghouse ID	Process Description	Control Device	Control Efficiency (%)	Emission Factor (lbs/ 1000 lbs conveyed)*	PTE of PM/PM10 after Control (lbs/hr)**	PTE of PM/PM10 after Control (tons/yr)**	PTE of PM/PM10 before Control (tons/yr)**
SV-3	Catalyst Storage Silo (EU-1)	Baghouse	99.0%	0.0018	4.1E-04	0.0018	0.18
Total						0.0018	0.18

* Emission Factors from AP-42, Section 11.26, Table 11.26-1: accounts for 99% control efficiency. The emission factor for talc processing was chosen since the aluminum chloride catalyst material is similar to talc in consistency.

** Assume all PM emissions equal PM10 emissions.

Methodology

PTE of PM/PM10 after Control (lbs/hr) = Max Amount Catalyst Received (MMlbs/yr) x Emission Factor (lbs/1000 lbs conveyed) x 1,000,000 lbs/MMlbs x 1yr/8760hr

PTE of PM/PM10 after Control (tons/yr) = Max Amount Catalyst Received (MMlbs/yr) x Emission Factor (lbs/1000 lbs conveyed) x 1,000,000 lbs/MMlbs x 1 ton/2000 lbs

PTE of PM/PM10 before Control (tons/yr) = PTE of PM/PM10 after Control (tons/yr) / (1-Control Efficiency %)

Appendix A: Emission Calculations
Natural Gas and Process Gas Fired
(Hot Oil Furnace/Process Heater EU-4)

Company Name: INEOS USA LLC
Address: 2357 Standard Avenue
Part 70: 089-25489-00076
Reviewer: Source calculations verified by ERG/JR
Date: February 9, 2007

Natural Gas Fired Emissions*:

Hours of Operation (hrs/yr)	8,760	
Maximum Heat Input Rating (MMBtu/hr)	10	*Maximum Heat Input Rating, Assuming VRU is Down*
Heating Value (MMBtu/MMscf)	1020	
Maximum Natural Gas Flow Rate (MMscf/hr)	0.010	
Maximum Natural Gas Flow Rate (MMscf/yr)	85.88	

	PM	PM10	VOC	NOx	SO2	CO
Emission Factor (lb/MMscf)**	1.9	7.6	5.5	100	0.6	84
Emissions (lb/hr)	0.02	0.07	0.05	0.98	0.01	0.82
Emissions (tpy)	0.08	0.33	0.24	4.29	0.03	3.61

* Process gas (from the Vapor Recovery Unit) and natural gas is used to fire the Hot Oil Furnace. The capacity of the hot oil furnace is 10 MMBtu/hr; process gas is typically used as the main fuel and natural gas is used to make up the remaining heat input differential. Therefore, 10 MMBtu/hr of natural gas is only used when the VRU is down and no gas is being routed from the VRU to the hot oil furnace.
** The emission factors are from AP-42, Chapter 1.4, Table 1.4-1.

Sample Calculation:

$$\text{PM10 Emissions (tpy)} = \frac{0.010\ \text{MMscf}}{\text{hour}} \cdot \frac{7.6\ \text{lb PM10}}{\text{MMscf}} \cdot \frac{8{,}760\ \text{hours}}{\text{year}} \cdot \frac{1\ \text{ton}}{2{,}000\ \text{lbs}} = 0.33\ \text{tpy PM10}$$

Process Gas Parameters:

VRU Hours of Operation (hrs/yr)*	8256	*Hours that the VRU is operating (i.e., 8,760 minus VRU downtime). VRU downtime is a maximum estimate from 1996 application - 21 days or 504 hours (assumes that all material is routed to the flare when the VRU is down).*
Maximum Gas Vented to Hot Oil Furnace from VRU (lbs/hr)	389	*From 1996 application (based on amount of maximum noncondensables from the VRU expected at production capacity of polybutene process unit)*
Maximum Gas Vented to Hot Oil Furnace from VRU (MMlbs/yr)	3.21	
Average Molecular Weight of BB Feed Material (lbs/lb-mol)	57	*Refer to the PIB Flare Emissions Calculations for information regarding the derivation of this value.*
Molecular Density (lb-mol/MMscf)	2596.15	*Derived from the Ideal Gas Law, assuming V = 1MMscf, P = 14.7 psi, T = 527.7* NR, *R = 10.73 psia-ft*^{3}*/lbmol-*NR
Maximum Process Gas Flow Rate (MMscf/hr)	0.003	
Maximum Process Gas Flow Rate Assuming VRU Downtime (MMscf/yr)	21.54	*Maximum Hourly Process Gas Flow Rate (MMscf/hr) * 8,256 hours/year*
Maximum Process Gas Flow Rate if VRU has no downtime (MMscf/yr)	22.85	*Maximum Hourly Process Gas Flow Rate (MMscf/hr) * 8,760 hours/year*
Process Gas Heating Value (MMBtu/MMscf)	2911	*Based on process gas properties. Refer to the PIB Flare sheet for more information.*
Maximum Process Gas Flow Rate (MMBtu/hr)	7.6	
Maximum Process Gas Flow Rate Assuming VRU Downtime (MMBtu/yr)	62695	
Maximum Process Gas Flow Rate if VRU has no downtime (MMBtu/yr)	66522.26	

* If the VRU is running, the gas is routed to the hot oil furnace. If the VRU is down, the gas is routed to the PIB Flare. Note that an assumed amount of VRU downtime was used to attribute emissions to the Hot Oil Furnace or PIB Flare. Since the VRU downtime may vary, more or less process gas may be burned in the hot oil furnace. Since the emission factors for the PIB Flare are higher than the emission factors for the hot oil furnace, the amount of VRU downtime hours are assumed to be conservatively high.

Appendix A: Emission Calculations
Natural Gas and Process Gas Fired
(Hot Oil Furnace/Process Heater EU-4)

Company Name: INEOS USA LLC
Address: 2357 Standard Avenue
Part 70: F169-6788-00049
Reviewer: Source calculations verified by ERG/JR
Date: February 9, 2007

Process Gas Emissions:

	PM	PM10	VOC	NOx	SO2	CO
Emission Factor Based on Natural Gas (lb/MMscf)*	1.9	7.6	5.5	100	1.66	84
Emission Factor Based on Heat Input (lb/MMBtu)	1.86E-03	7.45E-03	5.39E-03	9.80E-02		8.24E-02
Emissions (lb/hr)	0.01	0.06	0.04	0.74	0.00	0.63
Emissions Assuming NO VRU Downtime (tpy)	0.06	0.25	0.18	3.26	0.02	2.74

* The emission factors, except for SO2, are from AP-42, Chapter 1.4, Table 1.4-1 and are based on the heat value of natural gas (1020 MMBtu/MMCF). It is assumed that natural gas and the source's process gas have similar emission properties based on heat input capacity. SO2 emission factor is calculated based on assumptions regarding the percent of gas that will be combusted and assuming the flare gas will not contain more than 10 ppmv sulfur. This is based on the typical composition of the BB feed material and assumptions regarding how much of the sulfur in the BB feed material may be present in the gas sent to the flare and how much will stay in the spent BB material. This is more conservative than assuming the flare gas has the same properties as natural gas (i.e., 0.6 lb/MMscf). [Sulfur concentration in flare gas (ppm) x Molecular density of 1 MMscf of S gas from Ideal Gas Law (lbmol/MMscf) x Molecular Weight of S (lb/lbmol)].

Sample Calculation:

$$PM_{10}\text{ Emissions (tpy)} = \frac{66522\text{ MMBTU}}{\text{year}} \cdot \frac{0.00745\text{ lb}}{\text{MMBtu}} \cdot \frac{1\text{ ton}}{2{,}000\text{ lbs}} = 0.25\text{ tpy PM10}$$

Summary of Hot Oil Furnace PTE (Natural Gas + Process Gas Emissions):

Total Heat Input for Hot Oil Heater (MMBtu/hr)	10
Heat Input Contribution from Process Gas (MMBtu/hr)	7.6
Heat Input Contribution from Process Gas (MMscf/yr)	22.9
Heat Input Contribution from Natural Gas (MMBtu/hr)	2.4
Heat Input Contribution from Natural Gas (MMscf/yr)	20.7

	PM	PM10	VOC	NOx	SO2
Hot Oil Furnace Natural Gas Combustion Emissions*	0.02	0.08	0.06	1.03	0.01
Hot Oil Furnace Process Gas Combustion Emissions (tpy)**	0.06	0.25	0.18	3.26	0.02
Total (tpy)	**0.08**	**0.33**	**0.24**	**4.29**	**0.03**

* The PTE calculation conservatively assumes no VRU downtime, and that 2.4 MMBtu/hr of natural gas is required in addition to the maximum of 7.6 MMBtu/hr of process gas to run the hot oil furnace at the maximum capacity of 10 MMBtu/hr.

** Assuming no VRU downtime. Note that since the existing PIB Flare calculations assume some VRU downtime, these estimates are conservatively high and result in some double-counting of the combustion of the gases from the VRU.

Appendix A: Emission Calculations
Natural Gas and Process Gas Fired
(Hot Oil Furnace/Process Heater EU-4)
HAP Emissions

Company Name: INEOS USA LLC
Address: 2357 Standard Avenue
Part 70: 089-25489-00076
Reviewer: Source calculations verified by ERG/JR
Date: February 9, 2007

Potential Throughput
MMCF/yr

20.7

HAPs - Organics

	Benzene	Dichlorobenzene	Formaldehyde	Hexane	Toluene
Emission Factor in lb/MMCF	2.1E-03	1.2E-03	7.5E-02	1.8E+00	3.4E-03
Potential Emission in tons/yr	2.170E-05	1.240E-05	7.749E-04	1.860E-02	3.513E-05

HAPs - Metals

	Lead	Cadmuim	Chromium	Manganese	Nickel
Emission Factor in lb/MMCF	5.0E-04	1.1E-03	1.4E-03	3.8E-04	2.1E-03
Potential Emission in tons/yr	5.166E-06	1.137E-05	1.447E-05	3.926E-06	2.170E-05

Emission Factors from AP-42, Chapter 1.4, Tables 1.4-1, 1.4-2, and 1.4-3, SCC #1-02-006-02, 1-01-006-02, 1-03-006-02, and 1-03-006-03
(AP-42 Supplement D 3/98)
The five highest organic and metal HAPs emission factors are provided above.
Additional HAPs emission factors are available in AP-42, Chapter 1.4.

Note: The HAP emissions from burning Process Gas in the Hot Oil Furnace are accounted for in the Vapor Recovery Unit calculations.

Methodology
All Emission factors are based on normal firing.
MMBtu = 1,000,000 Btu
MMCF = 1,000,000 Cubic Feet of Gas

Potential Throughput (MMCF) = Heat Input Capacity (MMBtu/hr) x 8,760 hrs/yr x 1 MMCF/1,000 MMBtu
Emission (tons/yr) = Throughput (MMCF/yr) x Emission Factor (lb/MMCF)/2,000 lb/ton

Appendix A: Emission Calculations
PM/PM10 and VOC Emissions from Cooling Tower (RT601)

Company Name: INEOS USA LLC
Address: 2357 Standard Avenue
Part 70: 089-25489-00076
Reviewer: Source calculations verified by ERG/JR
Date: February 9, 2007

Cooling Tower Details

Maximum Circulation Rate (gpm)	18,000	
Hours of Operation (hrs/yr)	8,760	
Maximum total dissolved solids (TDS) content in recirculating water (mg/l)	860	*Maximum TDS content based on vendor recommended parameters used for cooling tower operation*
Maximum Circulation Rate (kgph)	1,080.00	*Maximum Circulation Rate (gpm) * 60 min/hr * (1 kgal/1,000 gal)*
Maximum Circulation Rate (MMgph)	1.08	*Maximum Circulation Rate (gpm) * 60 min/hr * (1 MMgal/1,000,000 gal)*

Total Liquid Drift (lb/kgal cooling water)	1.7	*From AP-42, Section 13.4, Table 13.4-1, induced draft towers*
PM Emission Factor at maximum TDS concentration (lb/kgal cooling water)	0.0015	*Total Liquid Drift (lb/kgal) *(Maximum TDS Content (parts solids /1,000,000 parts water))*

PM10 Emission Factor at 12,000 ppm TDS (lb/kgal)	0.019	*From AP-42, Section 13.4, Table 13.4-1, induced draft towers*
Adjusted PM10 Emission Factor at maximum TDS concentration (lb/kgal)	0.0014	*PM10 Emission Factor @ 12,000 ppm (lb/kgal) *(Maximum TDS Content (ppm) / 12,000 ppm)*

Emissions Calculation Summary

	PM	PM10	VOC
Emission Factor	0.0015	0.0014	0.7
Emission Factor Units	lb/kgal cooling water (at max TDS)	lb/kgal (at max TDS)	lb/MMgal cooling water
PTE (lb/hr)	1.58	1.47	0.76
PTE (tpy)	**6.92**	**6.44**	**3.31**

Notes
The cooling tower is an induced draft design.
Total liquid drift factor is from AP-42, Section 13.4, Table 13.4-1 (January 1995).
PM_{10} emission factor is derived from AP-42, Section 13.4, Table 13.4-1 (January 1995).
VOC Emission Factor is from AP-42, Section 5.1, Table 5.1-2 (January 1995).
Note that a chemical is added to the cooling tower to prevent corrosion; however, the chemical does not contain HAPs.
Shaded cells are inputs.
MM = 1,000,000
k = 1,000

Sample Calculation

$$\text{VOC Emissions (tpy)} = \frac{1.08\ \text{MMgal cooling water}}{\text{hour}} \cdot \frac{0.7\ \text{lb VOC}}{\text{MMgal cooling water}} \cdot \frac{8{,}760\ \text{hours}}{\text{year}} \cdot \frac{1\ \text{ton}}{2{,}000\ \text{lbs}} = 3.31\ \text{tons VOC/yr}$$

Appendix A: Emission Calculations
VOC and HAP Emissions from Vapor Recovery Unit (EU-5)

Company Name: INEOS USA LLC
Address: 2357 Standard Avenue
Part 70: 089-25489-00076
Reviewer: Source calculations verified by ERG/JR
Date: February 9, 2007

Vapor Recovery Unit (VRU): Process Upset Emissions Estimates

The emissions estimates presented here are for process upsets when condensables and non-condesables from the VRU are vented to the PIB flare.
Note that these calculations have been revised from the source modification application calculations such that they use the more conservative flare emission factors for NOX and CO and different flare gas heating value properties. The difference would not have impacted the permit level or rule applicability.
The condensables are considered spent BB and are routed to the BP Whiting Refinery or one of the rail car loading/unloading racks.

Hours of Operation (hrs/yr)	8,760	
Maximum Amount of Unreacted Feed Material Routed to VRU (lb/hr)	2,430	*From 1996 application (based on amount of unreacted feed expected at production capacity of polybutene process unit)*
Hours of Compressor/VRU downtime when gas to VRU is fed to flare (hours)	504	*Maximum estimate from 1996 application - 21 days or 504 hours (assumes that all material is routed to the flare when the VRU is down)*
PIB Flare Destruction Efficiency	99%	

Process Upset Loss Estimates - VOCs

Uncontrolled VOC Emissions (lb/hr)	2,430
Uncontrolled VOC Emissions (tpy)	**612.36**
Controlled VOC Emissions (lb/hr)	24.3
Controlled VOC Emissions (tpy)	**6.12**

Process Upset Loss Estimates - HAPs

HAP	Concentration in Feed (wt. %)	Uncontrolled PTE (tpy)	Controlled PTE (tpy)
1,3 butadiene	1.5%	9.02	0.090
acetonitrile	0.016%	0.095	9.5E-04
benzene	0.015%	0.089	8.9E-04
TOTAL HAP		**9.207**	**0.092**

Concentrations based on maximum concentration of each constituent in feed received from BP Whiting Refinery from the period between January 2004 and March 2006

Notes
The calculations conservatively assume that all the material sent from the process unit to the VRU is sent to the flare during an upset.
The calculations conservatively assume that all the material is VOC, although some of the material will be non-VOCs.
The calculations conservatively assume that all the spent BB material routed through the VRU is from BB feedstock from the refinery and contains the HAPs that may be present in the feedstock from the refinery.
MM = 1,000,000

Sample Calculation

$$\text{VOC Emissions (tpy)} = \frac{2{,}430 \text{ lbs vented}}{\text{hour of upset time}} \cdot \frac{504 \text{ hours upset time}}{\text{year}} \cdot (1 - 0.99) \cdot \frac{1 \text{ ton}}{2{,}000 \text{ lbs}} = 6.12 \text{ tons VOC/yr}$$

Appendix A: Emission Calculations
VOC and HAP Emissions from Loading/Unloading Racks (EU-2 and EU-3)

Company Name: INEOS USA LLC
Address: 2357 Standard Avenue
Part 70: 089-25489-00076
Reviewer: ERG/JR
Date: February 9, 2007

1. Emission Factors: AP-42

Reactants (feedstock) and/or products (polybutene and polygas) will be shipped by either truck loading rack or railcar loading rack. Both railcars and trucks will be filled by submerged loading process; however, splash loading will be used when loading Polybutene (product). The loadout racks will be controlled by a flare which has a control efficiency of 99% for VOC and HAPs.

According to AP-42, Chapter 5.2 - Transportation and Marketing of Petroleum Liquids (01/95), the VOC emission factors for the truck and rail loading racks can be estimated from the following equation:

$$L = 12.46 \times (SPM)/T$$

where:

L = loading loss (lbs/kgal)
S = a saturation factor (see AP-42, Table 5.2-1)
P = true vapor pressure of the liquid loaded (psia)
M = molecular weight of vapors (lb/lb-mol)
T = temperature of the bulk liquid loaded (NR)

Previous Stored Liquid	*S	P (psia)	M (lb/lb-mol)	T (NR)	L (lbs/kgal)
BB Feed (reactant)	1.0	32	57	530	42.88
Polygas (product)	1.0	5.3	113	547	13.64
Polybutene (product)	1.45	0.003	1800	760	0.13

Maximum BB Feed Receiving Limit:	2,100	kgal/yr (for both railcar and truck loading)
Annual Polygas Production Limit:	3,700	kgal/yr (for both railcar and truck loading)
Annual Polybutene Production Limit:	36,550	kgal/yr (for both railcar and truck loading)

2. Potential to Emit VOC Before Control:

BB Feed Unloaded (controlled by PIB Flare):
PTE of VOC (tons/yr) = 42.88 lbs/kgal x 2,100 kgal/yr x 1 ton/2000 lbs = **45.03 tons/yr**

Polygas Loaded (controlled by PIB Flare):
PTE of VOC (tons/yr) = 13.64 lbs/kgal x 3,700 kgal/yr x 1 ton/2000 lbs = **25.24 tons/yr**

Polybutene Loaded (not controlled by PIB Flare):
PTE of VOC (tons/yr) = 0.13 lbs/kgal x 36,550 kgal/yr x 1 ton/2000 lbs = **2.35 tons/yr**

TOTAL 72.6 tons/yr

3. Limited Potential to Emit*:

Flare Control Efficiency: 99% (for both truck and railcar loading)

BB Feed Unloaded (controlled by PIB Flare):
PTE of VOC (tons/yr) = 42.88 lbs/kgal x 2,100 kgal/yr x (1-99%) x 1 ton/2000 lbs = **0.45 tons/yr**

Polygas Loaded (controlled by PIB Flare):
PTE of VOC (tons/yr) = 13.64 lbs/kgal x 3,700 kgal/yr x (1-99%) x 1 ton/2000 lbs = **0.25 tons/yr**

Polybutene Loaded (not controlled by PIB Flare):
PTE of VOC (tons/yr) = 0.13 lbs/kgal x 36,550 kgal/yr x 1 ton/2000 lbs = **2.35 tons/yr**

TOTAL 3.0 tons/yr

*These calculations conservatively assume polybutene product with the lowest density is loaded for the entire year and that all the product produced is loaded via loading racks EU-2 and EU-3 instead of the new proposed loading rack that provides a vapor-balance with no emissions to the atmosphere. Additionally, the source does not use control during Polybutene loading; the product is very viscous and VOC emissions are minimal.

4. Potential to Emit HAPs:

HAP	Concentration in Feed (wt%)*	PTE of HAP before Control (tons/yr)	Limited PTE of HAP after Control (tons/yr)
1,3 Butadiene	1.5%	0.68	0.007
Acetonitrile	0.016%	0.007	7.20E-05
Benzene	0.015%	0.007	6.75E-05
Total		**0.7**	**0.01**

* This is the HAP fraction for the BB feed. There is no HAP present in the polybutene products.

Methodology
PTE of HAP before Control (tons/yr) = PTE of VOC before Control (tons/yr) x HAP %
Limited PTE of HAP after Control (tons/yr) = Limited PTE of VOC by BB Feed Unloaded (tons/yr) x HAP Concentration in Feed (wt%)

Appendix A: Emission Calculations
VOC and HAP Emissions from Loading/Unloading Rack (EU-7)

Company Name: INEOS USA LLC
Address: 2357 Standard Avenue
Part 70: 089-25489-00076
Reviewer: ERG/JR
Date: February 9, 2007

Spent BB Railcar Loading Emissions Calculation Results for New Loading/Unloading Rack

Case	Condition of Full Rail Car as Received						Condition of Emptied Rail Car						Loading of Rail Car			Vent Condensing				Flare	
	Temperature	Pressure	Vapor Density	Total Vapor Mass	C4 Vapor Mass	N2 Mass	Temperature	Pressure	Vapor Density	Total Vapor Mass	C4 Vapor Mass	N2 Mass	Loading Time	Total Vapor Vent Rate	C4 Vapor Vent Rate	Cond Pressure	Cond Temp	C4 Condensing Rate	C4 Vent Rate Thru Condenser	Total C4 Vented to Flare	Total C4 Emitted from Flare
	(F)	(psia)	(lb/cu ft)	(lb)	(lb)	(lb)	(F)	(psia)	(lb/cu ft)	(lb)	(lb)	(lb)	(hr)	(lb/hr)	(lb/hr)	(psia)	(F)	(lb/hr)	(lb/hr)	(lb)	(lb)
1	100	141.6	1.068	145	96.7	48.3	100	67.1	0.6885	3111	3063	48.3	1.821	1657	1631	140	120	1549	81.6	148.5	1.5
2	90	119.6	0.911	124	82.6	41.3	90	57.1	0.5909	2670	2629	41.3	1.821	1422	1400	140	110	1354	46.0	83.7	0.8
3	80	100.5	0.7736	105.2	70.2	35.0	80	48.6	0.5046	2281	2246	35.0	1.821	1214	1196	140	100	1169	27.1	49.4	0.5
4	75	91.92	0.7117	96.8	64.6	32.2	75	44.6	0.4654	2103	2071	32.2	1.821	1120	1103	83	95	1011	92.1	167.7	1.7
5	70	84.0	0.6538	88.9	59.3	29.6	70	40.9	0.4287	1937	1907	29.6	1.821	1032	1016	83	90	968	63.9	116.3	1.2
6	60	69.7	0.5496	74.7	49.8	24.9	60	34.2	0.362	1636	1611	24.9	1.821	871.1	857.8	83	80	824	33.9	61.7	0.6

Note: These calculations are based on a mass balance provided in the November 2005 source modification application. Assumptions are provided below.

Maximum number of railcars loaded per year: 2084

VOC Emissions from Spent BB Railcar Loading

	Uncontrolled	Controlled
Worst Case VOC Emissions (lb per railcar)	167.7	1.7
Worst Case PTE VOC at 1,042 cars/year [typical operation] (tpy)	87.35	0.87
Worst Case PTE VOC at 2,084 cars/year [maximum operation] (tpy)	174.71	1.75

Note: Flare control efficiency is 99%

Loading Losses - HAPs Emissions from Loading Spent BB

HAP	Concentration in Feed (wt. %)	Uncontrolled PTE (tpy)	Controlled PTE (tpy)
1,3 butadiene	1.5%	2.57	2.6E-02
acetonitrile	0.016%	0.03	2.7E-04
benzene	0.015%	0.03	2.5E-04

Concentrations based on maximum concentration of each constituent in feed received from BP Whiting Refinery from the period between January 2004 and March 2006

The source modification application for the proposed loading/unloading rack did not include HAP emissions. For the purposes of the facility's PTE calculations, it is conservatively assumed that any material received may have HAPs.
The calculations assume that the HAP percentages will be the same in the vapor emitted as in the material loaded.

Assumptions Used in Calculations

Calculations of the amount of vapor that may be sent to the flare for each car received with non-condensable vapor in the headspace are based on the following assumptions:

- The design liquid loading rate of each railcar is 300 gallons per minute (gpm), which corresponds to 40.1 actual cubic feet per minute (acfm) of vapor that will be displaced from the vapor space of the railcar.
- The railcars, which have a total volume of 33,800 gallons, will be loaded to 97 percent of liquid full. This corresponds to a total of 4383 cubic feet of vapor that will be displaced.
- The liquid in the arriving railcar is at ambient temperature.
- The liquid loaded onto the railcar is at ambient temperature.
- The pressure, density and mass of vapor in an arriving Rich BB railcar was determined based on a composition of 50 mole percent of i-Butene and 50 mole percent of Nitrogen. It was assumed that the vapor was in equilibrium with i-Butene liquid at ambient temperature.
- The pressure, density and mass of vapor in the empty railcar following unloading of the Rich BB were determined. It was assumed that the car was full of vapor in equilibrium with i-Butene liquid at ambient temperature.
- The quantity of vapor that is condensed in the air-cooled condenser was calculated at two pressures, 83 psia and 140 psia. The pressure 83 psia corresponds to the maximum pressure allowable such that the railcar can be loaded at the desired capacity. This is the case that the compressor is not used. The pressure 140 psia corresponds to an assumed discharge pressure of the vent condenser when the loading compressor is used. The condensing temperature in each case is 20 °F above ambient.
- The quantity of vapor exiting the condenser and flowing to the flare is calculated as the difference of the mass flow entering the condenser and the mass flow condensed.
- The amount of time it takes to load a railcar is 1.82 hours.

Appendix A: Emission Calculations
VOC Emissions from Neutralizer SD-134

Company Name: INEOS USA LLC
Address: 2357 Standard Avenue
Part 70: 089-25489-00076
Reviewer: Source calculations verified by ERG/JR
Date: February 9, 2007

Neutralizer SD-134 Details

A neutralizer is added to the process overhead lines to prevent corrosion. The neutralizer is stored in a pressurized drum. The emissions below account for when the neutralizer is loaded to the system. Note that no emissions from the use of the neutralizer in the process overhead lines are calculated. These emissions are negligible since only a relatively small amount is used each day, it is soluble in the steam in the process overhead lines, and the steam is condensed and transferred off-site in the waste water.

Hours of Operation (hrs/yr)	8,760	*Conservatively assumes that the towers are operating constantly throughout the year.*
Amount of Neutralizer Added to System (gals/day)	50	*Based on vendor recommendations*
Density of Neutralizer (lbs/gal)	7.76	*Based on specific gravity from Baker Petrolite MSDS (BPR 81180) and using 8.34 lb/gal as the density of water*
Methanol in Neutralizer (% by Weight)	30%	*Maximum value of range from MSDS*
Pressure of Drum (psi)	35	
Amount of Neutralizer Typically Loaded (gals/load)	1200	
Amount of Neutralizer Added to System (gals/yr)	18250	
Amount of Neutralizer Added to System (lbs/yr)	141550.65	
Amount of Methanol Added to System (as part of neutralizer - lbs/yr)	42465.20	
Number of Loading Events per Year	16	*Rounded Up to the Nearest Integer*

Volume of Gas Displaced from Drum During Loading (ft^3)	160.4	
R	10.73	psia ft^3/lb-mol NR
T (NR)	529.67	*Assumes ambient temperature*
Molecular Weight of Methanol (lb/lb-mol)	32.04	

Based on vapor pressure of neutralizer as listed in MSDS; conservatively assumes that all neutralizer vapor is Methanol
Conservatively assumes that all the volume displaced is neutralizer vapor. A nitrogen blanket is used; therefore, some of the displaced volume will be nitrogen.

Vapor Pressure of Neutralizer at 70 F	2.50	*From Section 9 of MSDS*
Partial Pressure of Neutralizer at 70 F	2.50	*by Raoult's Law (Partial pressure = mole fraction in liquid * vapor pressure of pure component)*
Partial Pressure of Methanol (psia)	2.50	*conservatively assume that all neutralizer vapor is Methanol*

Neutralizer SD-134 VOC Emissions

E = [V/(R*T)]x[(Pn) (Mwn)] Vapor Displacement During Loading (Equation 11 from 40 CFR 63, Subpart GGG - emissions due to vapor displacement)

E (lb/loading event)	2.26	
E (lb/year)	36.2	
E (tpy)	**0.018**	***VOC and Methanol***

Notes
The vapor displaced from loading is routed to the PIB flare; however, the control efficiency was not taken into account here.

Note that there are no standing and breathing losses from the drum since it is a pressurized drum that is not vented to the atmosphere. Venting only occurs during loading and during an emergency when the pressure is greater than the emergency pressure relief setting of 50 psi.
MM = 1,000,000
Shaded cells are inputs

Appendix A: Emission Calculations
VOC and HAP Emissions from Hydrotreater

Company Name: INEOS USA LLC
Address: 2357 Standard Avenue
Part 70: 089-25489-00076
Reviewer: Source calculations verified by ERG/JR
Date: February 9, 2007

Hydrotreater Details:

The hydrotreater is the process unit that produces the polybutene products. It does not normally vent to the atmosphere itself.
As provided for in the 1996 application (GSD-09 Miscellaneous Information, narrative page 2), when the process must be shut down for an extended period, the contents of the hydrotreater reactor are vented to the flare. In addition, the pressure downstream of the hydrotreater reactor is regulated by venting to the flare when necessary (i.e., pressure regulator fuel gas vent).
The calculations shown here are estimates of the amounts of gases that may be vented to the flare.

Hours of Operation (hrs/yr)	8,760	
Maximum Potential Venting Rate to the Flare (lbs/hr)	30	*From 1996 application (Based on vent rate of small vent for non-condensables (ST-102))*
Maximum Amount of Hydrotreater Contents Vented to the Flare (lb/switch)	50770	*From 1996 application (based on assuming the entire contents of the reactor are vented to the flare)*
PIB Flare Destruction Efficiency (%)	99%	
Percent of Time that Hydrotreater is Operating (annual %)	100%	*Conservatively assumes no downtime (e.g., plant shutdowns, process upsets, interruptions of feed)*
Maximum Times Hydrotreater Contents Vented to Flare (switches/year)	1	*Conservatively assumes that entire contents of hydrotreater are vented to the flare for one shut down per year.*

Hydrotreater: Pressure Relief Valve and Process Upset Flow Rate to Flare Estimates

Maximum Vented to Flare due to Pressure Relief - VOCs

Uncontrolled VOC Emissions (lb/hr)	30.00
Uncontrolled VOC Emissions (tpy)	131.40
Controlled VOC Emissions (lb/hr)	0.30
Controlled VOC Emissions (tpy)	1.31

Maximum Hydrotreater Contents Vented to Flare - VOCs

Uncontrolled VOC Emissions (lb/hr)	50770.00
Uncontrolled VOC Emissions (tpy)	25.39
Controlled VOC Emissions (lb/hr)	507.70
Controlled VOC Emissions (tpy)	0.25

Total VOCs

Uncontrolled VOC Emissions (lb/hr)	50,800
Uncontrolled VOC Emissions (tpy)	**156.79**
Controlled VOC Emissions (lb/hr)	508.00
Controlled VOC Emissions (tpy)	**1.57**

HAP Estimates

HAP	Concentration in Feed (wt. %)	Uncontrolled PTE (tpy)	Controlled PTE (tpy)
1,3 butadiene	1.5%	2.31	0.023
acetonitrile	0.016%	0.02	2.4E-04
benzene	0.015%	2.3E-02	2.3E-04
TOTAL HAP		**2.36**	**0.024**

Concentrations based on maximum concentration of each constituent in feed received from BP Whiting Refinery from the period between January 2004 and March 2006

Notes
The calculations conservatively assume that the maximum amount that can be vented to the flare to control the pressure downstream of the hydrotreater reactor is vented continuously.
The calculations conservatively assume that all the material is VOC, although some of the material will be non-VOCs.
The calculations conservatively assume that all the BB material is from BB feedstock from the refinery and contains the HAPs that may be present in the feedstock from the refinery.

Sample Calculation

$$\text{VOC Emissions (tpy)} = \frac{30 \text{ lbs vented}}{\text{hour}} \cdot \frac{8{,}760 \text{ hours}}{\text{year}} \cdot (1 - 0.99) \cdot \frac{1 \text{ ton}}{2{,}000 \text{ lbs}} = 1.31 \text{ tons VOC/yr}$$

Appendix A: Emission Calculations
Emissions from Process Gas from BP Whiting Refinery (PIB Flare)

Company Name: INEOS USA LLC
Address: 2357 Standard Avenue
Part 70: 089-25489-00076
Reviewer: Source calculations verified by ERG/JR
Date: November 20, 2006

Flare Gas Properties:

Flare Gas Heating Value (MMBtu/MMscf)	2911	
*Flare Gas Associated with On-Site Operations**		
Average Molecular Weight of BB Feed Material (lb/lb-mol)	57	
Molecular Density (lb-mol/MMscf)	2,596	*Derived from the Ideal Gas Law, assuming V = 1MMscf, P = 14.7 psi, T = 527.7 R, R = 10.73 psia ft3/lb-mol* NR
Flare Gas Density (lb/MMscf)	149,118	*Average Molecular Weight of BB Feed Material (lb/lb-mol) x Molecular Density (lb-mol/MMscf)*
*Process Gas from BP Whiting Refinery***		
Average Molecular Weight of Propene (lb/lb-mol)	42	
Molecular Density (lb-mol/MMscf)	2,596	*Derived from the Ideal Gas Law, assuming V = 1MMscf, P = 14.7 atm, T = 527.7 R, R = 10.73 psia-ft^3/lbmol-R*
Flare Gas Density for Propene (lb/MMscf)	109,249	*Average Molecular Weight of Propene (lbs/lbmol) x Molecular Density (lbmol/MMscf)*

* The existing unloading/loading racks, vapor recovery unit, neutralizer loading, and hydrotreater account for the on-site operations. The gas properties were estimated assuming the gas flared has similar properties to BB feed material, using typical BB feed constituent percentages and chemical properties.

** The propylene loading (PGP and RGP - Truck and Rail) and storage located at the BP Whiting Refinery accounts for this process gas. Properties of propene are used to estimate the volume of gas associated with the process gas stream coming from the BP Whiting Refinery. The same heating value is used for all flared gas, although the heating value for propene is slightly lower (i.e., approximately 2,149 MMBtu/MMscf).

Maximum Amount of Gas Combusted:

(note: criteria pollutant emissions from loading/unloading rack EU-7 are calculated elsewhere in this Appendix)

	VOC (tpy)	VOC (lbs/yr)	
Flare Gas Associated with On-Site Operations:			
VOC from Existing Loading/Unloading (EU-2 and EU-3)	70.3	1.41E+05	
VOC from VRU	612	1.22E+06	
VOC from Hydrotreater	156.8	3.14E+05	
Process Gas from BP Whiting Refinery:			
VOC from Propylene Loading*	3330	6.66E+06	
Total VOC combusted (lb/year)	**4169**	**8.34E+06**	*VOC combusted from loading/unloading racks (lb/year) + VOC combusted from VRU (lb/year)+ VOC combusted from Hydrotreater (lb/year) + VOC combusted from BP Whiting Refinery (lb/year)*

* This value is based on an agreement between INEOS and BP Products North America - Whiting Business Unit. The value was used in the 2005 Annual Emission Statement submitted by BP Products North America.

Maximum volume of gas combusted per year (MMscf/yr)	**72.2**	*[VOC from loading/unloading racks (lb/year) + VOC from VRU (lb/year)+ VOC from Hydrotreater (lb/year) / (Flare Gas Density associated with On-Site Operations)] + [VOC from Propylene Loading (lb/year) / (Flare Gas Density associated with Process Gas from BP Whiting Refinery)]*

Appendix A: Emission Calculations
Emissions from PIB Flare

Company Name: INEOS USA LLC
Address: 2357 Standard Avenue
Part 70: 089-25489-00076
Reviewer: Source calculations verified by ERG/JR
Date: September 29, 2006

PIB Flare Emissions from Combusting Process Gas attributed to the BP Whiting Refinery:

	PM	PM10	SO2	NOx	VOC**	CO
Emission Factor (lb/MMscf)*	21.7	21.7	1.66	197.9	See Note	1077.1
Emissions (tpy)	0.78	0.78	0.06	7.15	33.3	38.9

* Emission Factor Notes:
PM/PM10 emission factor based on AP-42, Section 1.4, Table 1.4-2 (July 1998) and 2911 MMBtu/MMscf, the heating value of process gas. [AP-42 Emission Factor (lb/MMBtu) * Heating Value of Process Gas (MMBtu/MMscf)]
SO2 emission factor is calculated based on assumptions regarding the percent of gas that will be combusted and assuming the flare gas will not contain more than 10 ppmv sulfur. This is based on the typical composition of the BB feed material and assumptions regarding how much of the sulfur in the BB feed material may be present in the gas sent to the flare and how much will stay in the spent BB material. This is more conservative than assuming the flare gas has the same properties as natural gas (i.e., 0.6 lb/MMscf). [Sulfur concentration in flare gas (ppm) x Molecular density of 1 MMscf of S gas from Ideal Gas Law (lbmol/MMscf) x Molecular Weight of S (lb/lbmol)]
NOX and CO emission factors are from AP-42, Section 13.5, Table 13.5-1 (January 1995). Note that the AP-42 emission factors for these pollutants were converted from lb/MMBtu by dividing by the heating value of the process gas in MMBtu/MMscf.

** Based on 99% control efficiency of the flare, 33.3 tpy VOC emissions are attributed to the Process Gas from the BP Whiting Refinery. The rest of the VOC emissions from the flare are attributed to individual processes located at INEOS and are presented in different worksheets.

PIB Flare Pilot Gas Emissions:

Hours of Operation (hrs/yr)	8,760	
Pilot Gas Design Rate (scfm)	18	*Natural gas-fired*
Hourly Gas Flow Rate (MMscf/hr)	0.00108	
Yearly Gas Flow Rate (MMscf/yr)	9.4608	

	PM	PM10	VOC	NOx	SO2	CO
Emission Factor (lb/MMscf)*	7.6	7.6	142.8	69.4	0.6	377.4
Emissions (lb/hr)	0.01	0.01	0.15	0.07	0.001	0.41
Emissions (tpy)	0.04	0.04	0.68	0.33	0.003	1.79

* PM, PM10, and SO2 emission factors are from AP-42, Section 1.4, Table 1.4-2 (July 1998). NOX, CO, and VOC emission factors are from AP-42, Section 13.5, Table 13.5-1 (January 1995). Note that the AP-42 emission factors for these pollutants were converted from lb/MMBtu by dividing by the heating value of natural gas in MMBtu/MMscf.

Appendix A: Emission Calculations
VOC Emissions from PIB Flare

Company Name: INEOS USA LLC
Address: 2357 Standard Avenue
Part 70: F169-6788-00049
Reviewer: Source calculations verified by ERG/JR
Date: February 9, 2007

Summary of PIB Flare PTE (i.e., not including new loading/unloading rack or equipment leaks):

	PM	PM10	VOC	NOx	SO2	CO
PIB Flare Pilot Emissions (tpy)	0.04	0.04	0.68	0.33	0.00	1.79
Process Gas (tpy)*	0.78	0.78	See Note	7.15	0.06	38.9
Process Gas from BP Whiting Refinery (tpy)	-	-	33.3	-	-	-
Total	0.82	0.82	34.0	7.48	0.06	40.7

* With the exception of VOC, the criteria pollutant emissions are based on the maximum volume of gas combusted per year at the PIB Flare, including process gases from the unloading/loading racks, vapor recovery unit, neutralizer loading, hydrotreater, and the Propylene loading (PGP and RGP - Truck and Rail) and storage at the BP Whiting Refinery. With the exception of the BP Whiting Refinery, VOC emissions are calculated elsewhere in this appendix for the individual processes venting to the flare including existing unloading/loading racks, vapor recovery unit, neutralizer loading, and the hydrotreater. The VOC emissions from the Propylene loading (PGP and RGP - Truck and Rail) and storage at the BP Whiting Refinery are shown above as 33.3 tpy.

Sample Calculation

$$\text{PM10 Emissions (tpy)} = \frac{72.2\ \text{MMscf}}{\text{year}} \cdot \frac{21.7\ \text{lb PM10}}{\text{MMscf}} \cdot \frac{1\ \text{ton}}{2{,}000\ \text{lbs}} = 0.78\ \text{tpy PM10}$$

Appendix A: Emission Calculations
Other Emissions from PIB Flare

Company Name: INEOS USA LLC
Address: 2357 Standard Avenue
Part 70: 089-25489-00076
Reviewer: Source calculations verified by ERG/JR
Date: February 9, 2007

Flare Emissions: Process Gas from New Loading/Unloading Rack and Closed Vent System for Compressors

Note that these calculations have been revised from the source modification application calculations such that they use the more conservative flare emission factors for NO_X and CO and different flare gas heating value properties. The difference would not have impacted the permit level or rule applicability.

Total VOC from loading/unloading rack EU-7 (tpy) =	1.75	*controlled*
Total VOC from closed vent system for compressors (tpy) =	0.02	*controlled*

The pilot emissions are included in the existing flare calculations (i.e., the pilot would have been lit at all times to make it available for the existing operations venting to the flare).

PIB Flare Destruction Efficiency (%)	99%

Amount of Gas Combusted:

Other Criteria pollutant emissions from flare are based on amount of natural gas combustion emission factors, industrial flare emission factors, and a mass balance-derived emission factor for SO2.

Loading/Unloading Rack

If 1.75 tpy of VOC is emitted, then 1.75 tpy/(1-efficiency) is what was combusted (1.75 ton/0.01) = 174.71 tons or 349,412 lbs

Closed Vent System for Compressors

If 0.02 tpy of VOC is emitted, then 0.02 tpy/(1-efficiency) is what was combusted (0.02 ton/0.01) = 1.57 tons or 3,139 lbs

Flare Gas Properties:

The following properties were estimated assuming that the gas flared had similar properties to the BB feed material and using typical BB feed constituent percentages and chemical properties of these typical constituents.

Flare Gas Heating Value (MMBtu/MMscf)	2911	
Average Molecular Weight of BB Feed Material (lbs/lb-mol)	57	
Molecular Density (lb-mol/MMscf)	2,596	*Derived from the Ideal Gas Law, assuming V = 1MMscf, P = 14.7 atm, T = 527.7 R, R = 10.73 psia-ft^3/lbmol-R*
Flare Gas Density (lb/MMscf)	149,118	*Average Molecular Weight of BB Feed Material (lbs/lbmol) x Molecular Density (lbmol/MMscf)*

Total VOC combusted (lb/year)	352,551	*VOC combusted from loading/unloading rack (lb/year) + VOC combusted from closed vent system (lb/year)*
Maximum volume of gas combusted per year (MMscf/yr)	2.36	*Total VOC combusted divided by the density of the flare gas*
AP-42 PM/PM10 Emission Factor Based on Natural Gas (lb/MMscf)	7.6	
AP-42 PM/PM10 Converted Emission Factor Based on Heat Input Value (lb/MMBtu)	0.0075	*AP-42 Emission Factor (lb/MMscf) / 1,020 MMBtu/MMscf*
AP-42 PM/PM10 Emission Factor Converted to be Based on Process Gas (lb/MMscf)	21.690	*AP-42 Converted Emission Factor (lb/MMBtu) * Heating Value of Process Gas (MMBtu/MMscf)*

Emissions Calculation Summary

	PM	PM10	NOx	SO2	CO
Emission Factor (lb/MMscf)	21.690	21.690	197.948	1.66	1077.07
Emissions (tpy)	0.03	0.03	0.23	0.002	1.27

Assumed heating value of BB feed material (similar to butane) (MMBtu/MMscf)	2911	*Used to convert lb/MMBtu emission factors*

Notes

VOCs are attributed to individual processes vented to the flare
PM, PM10 emission factors are from AP-42, Section 1.4, Table 1.4-2 (July 1998)
NOX and CO emission factors are from AP-42, Section 13.5, Table 13.5-1 (January 1995). Note that the AP-42 emission factors for these pollutants were converted from lb/MMBtu by dividing by the higher heating value of the gas in MMBtu/MMscf.

SO2 emission factor derivation:

Sulfur concentration in flare gas (ppmv)	10	
Molecular Weight of SO2 (lb/lb-mol)	64.06	
SO2 Emission Factor (lb/MMscf)	1.66	*Fraction of S in Flare Gas (ppm - MMscf S/MMscf gas) x Molecular Density of 1 MMscf of S gas from Ideal Gas Law (lbmol/MMscf) x Molecular Weight of S (lb/lbmol)*

SO2 emission factor is calculated based on assumptions regarding the percent of gas that will be combusted and assuming the flare gas will not contain more than 10 ppmv sulfur. This is based on the typical composition of the BB feed material and assumptions regarding how much of the sulfur in the BB feed material may be present in the gas sent to the flare and how much will stay in the spent BB material. This is more conservative than assuming the flare gas has the same properties as natural gas (i.e., 0.6 lb/MMscf). [Sulfur concentration in flare gas (ppm) x Molecular density of 1 MMscf of S gas from Ideal Gas Law (lbmol/MMscf) x Molecular Weight of S (lb/lbmol)]

Appendix A: Emission Calculations
Fugitive VOC and HAP Emissions from Equipment Leaks from Existing Equipment (excluding EU-7

Company Name: INEOS USA LLC
Address: 2357 Standard Avenue
Part 70: 089-25489-00076
Reviewer: Source calculations verified by ERG/JR
Date: February 9, 2007

Fugitive Emissions - VOC Emissions

						Leaking (i.e., greater than or equal to 10,000 ppmv) Emission Factor			Non-Leaking (i.e., less than 10,000 ppmv) Emission Factor			Uncontrolled Emissions		Controlled Emissions***	
Type of Component	Total Number	Number in Light Liquid Service	Number in Vapor Service	Number in Heavy Liquid Service	Percent Leakers	Light Liquid Service SOCMI Factor (Kg/hr comp.)	Vapor Service SOCMI Factor (Kg/hr-Comp.)	Heavy Liquid Service SOCMI Factor (Kg/hr-Comp.)	Light Liquid Service SOCMI Factor (Kg/hr-comp.)	Vapor Service SOCMI Factor (Kg/hr-Comp.)	Heavy Liquid Service SOCMI Factor (Kg/hr-Comp.)	VOC Emission Rate (TPY)	VOC Emission Rate (lb/hr)	VOC Emission Rate (TPY)	VOC Emission Rate (lb/hr)
Valves	3000	2310	689	1	0.30%	0.0892	0.0782	0.00023	0.000165	0.000131	0.00023	12.07	2.76	1.86	0.42
Flanges (Connectors)	5500	5500		0	0.06%	0.113	0.113	--	0.000081	0.000081	--	7.90	1.80	2.77	0.63
Pumps*	52	52	0	0	0.30%	0.243	0	--	0.00187	0	--	1.30	0.30	0.40	0.09
Compressor seals**	5	0	5	0	0.30%	0	1.608	--	0	0.0894	--	4.54	1.04	4.54	1.04
Total VOC Emissions												**25.81**	**5.89**	**9.56**	**2.18**

* The number of pumps includes two agitators. Table 2-5 of the US EPA "Protocol for Equipment Leak Emission Estimates" indicates that the emission factors for pumps may be used for agitators.

** The 1996 application did not include compressor seals in the fugitive component calculations. Since these compressors are not new, this was most likely an oversight during the 1996 application development.

*** Control Effectiveness is from Protocol for Equipment leak Emission Estimates, EPA-453/R-95-017, Table 5-2.

Equipment Component Source	Product	Subpart VV Control Effectiveness (%)
Valves	Gas/Vapor	87%
Valves	Light Liquid	84%
Pumps	Light Liquid	69%
Connectors	All	65%

Fugitive Emissions - HAPs Emissions

HAP*	Concentration in Feed (wt. %)	Uncontrolled PTE (tpy)
1,3 butadiene	1.5%	0.38
acetonitrile	0.016%	0.004
benzene	0.015%	0.0038
TOTAL HAP		**0.3880**

Concentrations based on maximum concentration of each constituent in feed received from BP Whiting Refinery from the period between January 2004 and March 2006

* This assumes that, at worst case, all the material routed through the existing piping and components is from the refinery and contains the HAPs that may be present in the feedstock from the refinery (and spent feedstock that is sent back to the refinery).

Methodology and Basis

The SOCMI Factors are from "Protocol for Equipment Leak Emission Estimates," EPA-453/R-95-017, November 1995. SOCMI Screening Ranges Emission Factors from Table 2-5 were used. The factors are a weighted average of the leaking and non-leaking factors, based on an assumption regarding the percentage of that component that may have detected leaks and assumptions described below.

The "percent leakers" rates are based on information submitted in the 1996 application. It is assumed that this data was based on old monitoring data or data from similar facilities. The "percent leakers" rates should be conservative (i.e., overestimate the number of leaking components) because more recent monitoring data has shown either no leaking equipment or lower rates of leaking equipment than the percentages presented here.

No "percent leakers" was provided for compressor seals in the 1996 application. No leaks were detected for the compressor seals based on monitoring conducted during 2001, 2002, and 2005, using 10,000 ppm as a leaking rate. Instead of using a 0% leak rate and to be more conservative for PTE calculation purposes, the leak rate of 0.30% used for valves and pumps in the 1996 application was assumed.

Note that some flanges/connectors are in light liquid service and others are in vapor service. Since the emission factors are the same for both types of service, the amount of components in each type of service is not necessary to calculate emissions.

VOC Emission Rate = VOC Emissions from Light Liquid Service + VOC Emissions from Vapor Service
VOC Emissions from Light Liquid Service = VOC Emissions from Leaking Components + VOC Emissions from Non-Leaking Components
VOC Emissions from Leaking Components (liquid service) = Number in Liquid Service x Percent Leakers x Leaking Light Liquid Service SOCMI Factor x (2.20 lb/Kg) x 8,760 hours x (1 ton/2000 lbs)

Sample Calculation

VOC Emissions from Pumps = $\left[\frac{52 \text{ pumps}}{} \cdot \frac{0.003 \text{ leaking}}{} \cdot \frac{0.243 \text{ kg}}{\text{hr-pump}} + \frac{52 \text{ pumps}}{} \cdot \frac{(1-0.003)}{} \cdot \frac{0.00187 \text{ kg}}{\text{hr-pump}}\right] \cdot \frac{2.20 \text{ lbs}}{1 \text{ kg}} \cdot \frac{8{,}760 \text{ hr}}{1 \text{ year}} \cdot \frac{1 \text{ ton}}{2000 \text{ lbs}} = 1.302 \text{ tons/year}$

1 kg = 2.20462 lbs

Appendix A: Emission Calculations
EU-7 Fugitive VOC and HAP Emissions

Company Name: INEOS USA LLC
Address: 2357 Standard Avenue
Part 70: 089-25489-00076
Reviewer: Source calculations verified by ERG/JR
Date: February 9, 2007

Fugitive Emissions - VOC Emissions

					Leaking (i.e., greater than or equal to 10,000 ppmv) Emission Factor		Non-Leaking (i.e., less than 10,000 ppmv) Emission Factor		Uncontrolled Emissions		Total Controlled Emissions (Fugitive and Controlled)*	
Type of Component	Total Number	Number in Liquid Service	Number in Vapor Service	Percent Leakers	Light Liquid Service SOCMI Factor (Kg/hr-comp.)	Vapor Service SOCMI Factor (Kg/hr-Comp.)	Light Liquid Service SOCMI Factor (Kg/hr-comp.)	Vapor Service SOCMI Factor (Kg/hr-Comp.)	VOC Emission Rate (TPY)	VOC Emission Rate (lb/hr)	VOC Emission Rate (TPY)	VOC Emission Rate (lb/hr)
Valves	137	83	54	0.25%	0.0892	0.0782	0.000165	0.000131	0.48	0.11	0.48	0.11
Flanges (Connectors)	385	231	154	0.03%	0.113	0.113	0.000081	0.000081	0.43	0.10	0.43	0.10
Pumps	2	2	0	0.15%	0.243	0	0.00187	0	0.04	0.01	0.04	0.01
Compressor seals	2	0	2	0%	0	1.608	0	0.0894	1.73	0.39	0.17	0.04
								Total Emissions	**2.68**	**0.61**	**1.12**	**0.26**

*Note: Only compressors will be controlled by the closed vent system and flare; See below for further calculations. The emissions from the compressors are fugitive emissions plus captured an controlled emissions. The emissions from the other components are fugitive emissions.

Fugitive Emissions - HAPs Emissions

HAP*	Concentration in Feed (wt. %)	Uncontrolled PTE (tpy)	Controlled PTE (tpy)*
1,3 butadiene	1.5%	3.9E-02	1.7E-02
acetonitrile	0.016%	4.2E-04	1.7E-04
benzene	0.015%	3.9E-04	1.6E-04

Concentrations based on maximum concentration of each constituent in feed received from BP Whiting Refinery from the period between January 2004 and March 2006

*This assumes that, at worst case, all the material routed through the existing piping and components is from the refinery and contains the HAPs that may be present in the feedstock from the refinery (and spent feedstock that is sent back to the refinery). The 2005 source modification application for the proposed loading/unloading rack did not include HAP emissions. For the purposes of the facility's PTE calculations, it is conservatively assumed that any material received may have HAPs.

Methodology and Basis

The SOCMI Factors are from "Protocol for Equipment Leak Emission Estimates," EPA-453/R-95-017, November 1995. SOCMI Screening Ranges Emission Factors from Table 2-5 were used. The factors are a weighted average of the leaking and non-leaking factors, based on the percentage of that component that have had detected leaks at the comparable existing equipment in the past and assumptions described below.

The "percent leakers" rates are based on percentages of existing equipment components that have had detected leaks in the past and information submitted in the 1996 application. Data for monitoring conducted in 2001, 2002, and 2005, using 10,000 ppm as a leak rate, was used for recent data. Data from 2003 and 2004 was based on a different leak rate. Since the SOCMI factors are based on 10,000 ppm, data based on 10,000 ppm was used.

"Percent leakers" for the valves: The worst-case leak rate from the three years of data (2001, 2002, and 2005) was 0.194%. The leak rates for valves in liquid service and valves in vapor service varied slightly, but the worst case rate (i.e.,the 0.194% leak rate from valves in vapor service) is considered for the purposes of estimating PTE. The actual worst-case leak rate factor based on recent data (0.194%) was compared to the leak rates provided in the 1996 application. A leak rate of 0.30% for valves was provided in the 1996 application. Since the calculations presented here are PTE calculations, Innovene chose the mean between the 1996 application assumptions for the existing equipment and the existing equipment leak rates to arrive at 0.25% leaking rate (i.e., 0.194% + ((0.3%-0.194%)/2)). As the new equipment will be assumed to have less opportunity to leak, this is still a conservative assumption.

"Percent leakers" for the flanges and connectors: No leaks were detected during the three years of data (2001, 2002, and 2005). A leak rate of 0.06% for flanges and connectors was provided in the 1996 application. Since the calculations presented here are PTE calculations, Innovene chose the mean between the 1996 application assumptions for the existing equipment and the existing equipment leak rates to use 0.03% leaking rate (i.e., 0% + (0.06%/2). As the new equipment will be assumed to have less opportunity to leak, this is still a conservative assumption.

"Percent leakers" for the pumps: No leaks were detected during the three years of data (2001, 2002, and 2005). A leak rate of 0.3% for pumps was provided in the 1996 application. Since the calculations presented here are PTE calculations, Innovene chose the mean between the 1996 application assumptions for the existing equipment and the existing equipment leak rates to use 0.15% leaking rate (i.e., 0% + (0.3%/2). As the new equipment will be assumed to have less opportunity to leak, this is still a conservative assumption.

The "percent leakers" for the compressor seals are based on monitoring conducted during 2001, 2002, and 2005, using 10,000 ppm as a leaking rate. No leaks were detected during these monitoring periods. In addition, no data was provided in the 1996 application regarding compressor leak rates. Therefore, a leak rate of 0% was used.

Appendix A: Emission Calculations
EU-7 Fugitive VOC and HAP Emissions (Continued)

Company Name: INEOS USA LLC
Address: 2357 Standard Avenue
Part 70: 089-25489-00076
Reviewer: Source calculations verified by ERG/JR
Date: February 9, 2007

VOC Emission Rate = VOC Emissions from Light Liquid Service + VOC Emissions from Vapor Service
VOC Emissions from Light Liquid Service = VOC Emissions from Leaking Components + VOC Emissions from Non-Leaking Components
VOC Emissions from Leaking Components (liquid service) = Number in Liquid Service x Percent Leakers x Leaking Light Liquid Service SOCMI Factor x (2.20 lb/Kg) x 8,760 hours x (1 ton/2000 lbs)

Sample Calculation

$$\text{VOC Emissions from Pumps} = \left[\frac{[2 \text{ pumps}]}{} \cdot \frac{0.002}{} \cdot \frac{0.243 \text{ kg}}{\text{hr-pump}} + \frac{[2 \text{ pumps}]}{} \cdot \frac{(1-0.002)}{} \cdot \frac{0.00187 \text{ kg}}{\text{hr-pump}} \right] \cdot \frac{2.20 \text{ lbs}}{1 \text{ kg}} \cdot \frac{8{,}760 \text{ hr}}{1 \text{ year}} \cdot \frac{1 \text{ ton}}{2000 \text{ lbs}} = 0.043 \text{ tons/year}$$

1 kg = 2.20462 lbs

Closed Vent System Description

The compressors will be equipped with a closed vent system routed to the existing flare, capable of an overall 90% control efficiency. The overall control efficiency is based on an engineering estimate, using the control efficiency for a closed vent system.

Overall Closed Vent System Control Efficiency	90%	
Existing PIB Flare Destruction Efficiency	99%	
Estimated Capture Efficiency	90.9%	*Overall Control Efficiency / Flare Destruction Efficiency*

Fugitive VOC Potentially Not Captured By Closed Vent System

VOC Emission Rate (TPY)	0.16	*Uncontrolled VOC Emission Rate (TPY) * (1 - Estimated Capture Efficiency)*
VOC Emission Rate (lb/hr)	0.04	*Uncontrolled VOC Emission Rate (lb/hr) * (1 - Estimated Capture Efficiency)*

VOC Controlled by Closed Vent System and Flare

VOC Emission Rate (TPY)	0.02	*Uncontrolled VOC Emission Rate (TPY) * Estimated Capture Efficiency * (1 - Existing PIB Flare Destruction Efficiency)*
VOC Emission Rate (lb/hr)	0.004	*Uncontrolled VOC Emission Rate (lb/hr) * Estimated Capture Efficiency * (1 - Existing PIB Flare Destruction Efficiency)*

Total VOC Emission Rate from Compressors When Controlled by Closed Vent System and Flare

VOC Emission Rate (TPY)	0.17	*Fugitive VOC Not Captured By Closed Vent System (TPY) + VOC Controlled by Closed Vent System and Flare (TPY)*
VOC Emission Rate (lb/hr)	0.039	*Fugitive VOC Not Captured By Closed Vent System (lb/hr) + VOC Controlled by Closed Vent System and Flare (lb/hr)*

Appendix A: Emission Calculations
VOC Emissions from Tanks

Company Name: INEOS USA LLC
Address: 2357 Standard Avenue
Part 70: 089-25489-00076
Reviewer: Source calculations verified by ERG/JR
Date: February 9, 2007

Tank	Service	VOC (lb/yr)	VOC (tpy)
RF-101	L-14 Polybutene	2.2	0.00
RF-102	L-14 Polybutene	2.2	0.00
RF-104	L-14 Polybutene	0.7	0.00
RF-105	H-1900 Polybutene	7.2	0.00
RF-106	H-1900 Polybutene	7.2	0.00
RF-107	H-1900 Polybutene	15.6	0.01
RF-108	H-1900 Polybutene	15.6	0.01
RF-109	H-300 Polybutene	5.6	0.00
RF-110	H-300 Polybutene	5.6	0.00
RF-112	H-1500 Polybutene	15.6	0.01
RF-113	H-1500 Polybutene	15.6	0.01
RF-114	H-300 Polybutene	5.6	0.00
RF-117	H-100 Polybutene	1.4	0.00
RF-118	H-100 Polybutene	0.5	0.00
RF-119	H-100 Polybutene	0.5	0.00
RF-131	light polybutene blend	80.8	0.04
RF-132	light polybutene blend	80.8	0.04
RF-133	heavy polybutene blend	0.1	0.00
RF-134	heavy polybutene blend	0.1	0.00
RF-141	L-4 Polybutene	21	0.01
RF-142	L-4 Polybutene	21	0.01
RF-143	H-1900 Polybutene	18.9	0.01
RF-145	Slop Oil	691.4	0.35
RF-144	L-4 Polybutene	94.5	0.05
Total for Tanks		**1109.7**	**0.55**

Notes

These emissions estimates are from those tanks that are currently in service and were estimated with TANKS 4.0.9d.

Appendix A: Emission Calculations
VOC Emissions from Insignificant Diesel and Gasoline Tanks

Company Name: INEOS USA LLC
Address: 2357 Standard Avenue
Part 70: 089-25489-00076
Reviewer: Source calculations verified by ERG/JR
Date: February 9, 2007

Tank*	Nominal Capacity (gal)	Calculated Volume (ft^3)	Equivalent Diameter (ft)	Maximum Annual Throughput (gallons/year)
Gasoline	500	68.54	3.81	2500
Diesel	250	34.74	3.29	750

TANKS 4.09d Results

Tank	Working Loss (lbs/yr)	Breathing Loss (lbs/yr)	Total Losses (lbs/yr)	Total Losses (tpy)
Gasoline	26.78	Negligible	26.78	0.01
Diesel	0.01	Negligible	0.01	5.0E-06
			TOTAL	**0.01**

* The tanks are horizontal, skid-mounted tanks. The tanks are beige. TANKS does not include an option for beige tanks; therefore, light gray was used. It should be noted that the color will not have an effect on emissions estimates since the tanks are double-walled with a 4 inch interstitial space between the walls.
TANKS will not accept tank lengths less than five (5) feet; therefore, five feet was used as the length of the diesel tank in the TANKs program.
Equivalent diameters were estimated based on tank volume since TANKS only includes inputs for cylindrical, horizontal tanks.

Appendix A: Emission Calculations
Fugitive Emissions From Paved Roads

Company Name: INEOS USA LLC
Address: 2357 Standard Avenue
Part 70: 089-25489-00076
Reviewer: Source calculations verified by ERG/JR
Date: February 9, 2007

1. Emission Factors: AP-42

According to AP-42, Chapter 13.2.1 - Paved Roads (12/03), the PM/PM10 emission factors for paved roads can be estimated from the following equation:

$$E = (k \times (sL/2)^a \times (w/3)^b - C) \times (1 - p/(4 \times 365))$$

where:

E =	emission factor (lb/vehicle mile traveled)	
sL =	road surface silt loading (g/m^2) =	0.6 (g/m^2) (AP-42, Table 13.2.1-3)
w =	mean vehicle weight (tons) =	9.6 tons
k =	empirical constant =	0.082 for PM and 0.016 for PM10
a =	empirical constant =	0.65
b =	empirical constant =	1.5
C =	emission factor for exhaust, brake and tire wear	0.00047 for PM and PM10
p =	number of days per year with 0.01 inches precipitation	120

PM Emission Factor = $(0.082 \times (0.6/2)^{0.65} \times (27.5/3)^{1.5} - 0.00047) \times (1 - 120/1460)$ = **0.20** lbs/mile

PM10 Emission Factor = $(0.016 \times (0.6/2)^{0.65} \times (27.5/3)^{1.5} - 0.00047) \times (1 - 120/1460)$ = **0.04** lbs/mile

2. Potential to Emit (PTE) of PM/PM10 Before Control from Paved Roads:

Vehicle Type	Ave Weight of Vehicles (tons)*	Vehicle Mile Traveled (VMT) (miles/yr)*	Traffic Component (%)	Component Vehicle Weight (tons)	PTE of PM before Control (tons/yr)	PTE of PM10 before Control (tons/yr)
Passenger Cars	2.0	2,738	23.7%	0.47	0.3	0.05
Pickup Trucks	4.3	7,300	63.3%	2.69	0.72	0.14
Semi Trucks	40.0	1,497	13.0%	5.19	0.15	0.03
Total		**11,534**	**100%**	**8.4**	**1.1**	**0.22**

* This information is provided by the source.

Methodology

Traffic Component (%) = VMT / Total VMT
Component Vehicle Weight = Ave. Weight of Vehicles (ton) x Traffic Component (%)
PTE of PM/PM10 before Control (tons/yr) = VMT (miles/yr) x PM/PM10 Emission Factors x 1 ton/2000 lbs

Appendix A: Emission Calculations
VOC Emissions from Insignificant Lab

Company Name: INEOS USA LLC
Address: 2357 Standard Avenue
Part 70: 089-25489-00076
Reviewer: Source calculations verified by ERG/JR
Date: February 9, 2007

The solvents listed below are used in the lab. The quantities used are estimated based on assumptions regarding past use. The naphtha is used in a small covered container for cleaning glassware. The container is only open during periods when personnel are cleaning glassware. When the naphtha must be changed, it is emptied into a closed container which is eventually emptied into the slop oil tank, RF-145.

Solvent	Amount Used per Year (gallons/year)	Specific Gravity	
Acetone	330	0.79	*Note that Acetone is not a VOC or HAP; therefore, there are no emissions associated with its use.*
Naphtha	330	0.66	

Lab Details:

Hood Fan Speed (m/s) - u	0.38	*The face velocity of the hood fan is 75 feet per minute*
Molecular Weight of Naphtha - M	110	*Approximate*
Surface Area of Container (sq. feet) - A	0.79	*The container is approximately 12 inches in diameter.*
Conversion Factor - sq. feet/sq. meter	10.76	
Surface Area of Container (sq. meters) - A	0.07	
Vapor pressure of Naphtha (kPa)	1.359888	*At 68 degrees Fahrenheit*
Temperature (K)	293.15	*Ambient temperature of 68 degrees Fahrenheit*
Minutes Container is Exposed per Day (min/day)	90	*Glassware is washed for approximately 30 minutes per shift, at three shifts per day*

PTE VOC Emissions*:

E (kg/min) =	4.65E-04
Conversion Factor - lb/kg	2.20462
VOC Emissions (lbs/day)	0.09
VOC Emissions (tpy)	**0.02**

* Emissions will only occur from the container when the lid is open. Emissions are estimated using the US EPA equation for predicting the rate at which liquid evaporates from the surface of a pool of liquid which is at or near the ambient temperature.

$E = 10.40 * u^{0.78} * M^{0.667} * A * P/(R*T)$

Where,
E = Evaporation Rate (kg/min)
u = Wind speed just above the pool liquid surface (m/s)
M = Molecular weight of the pool liquid
A = Surface area of the pool liquid (sq. meters)
P = Vapor pressure of the pool liquid at the pool temperature (kPa)
T = Pool liquid temperature (K)
R = Universal Gas Law constant (82.05 (atm)(cm^3)/(gmol)(K))

The emissions estimate equation are from the following US EPA documents (with all units converted to metric):

"Technical Guidance For Hazards Analysis", U.S, EPA and U.S. FEMA, December 1987 [Equation (7), Section G-2, Appendix G. Available at http://yosemite.epa.gov/oswer/ceppoweb.nsf/vwResourcesByFilename/tech.pdf/$File/tech.pdf]

"Risk Management Program Guidance For Offsite Consequence Analysis", U.S. EPA publication EPA-550-B-99-009, April 1999. [Equation (D-1), Section D.2.3, and Equation (D-7), Section D.6, Appendix D. Available at http://yosemite.epa.gov/oswer/ceppoweb.nsf/vwResourcesByFilename/oca-all.PDF/$File/oca-all.PDF]

Appendix A: Emission Calculations
VOC Emissions from Insignificant Cooling Tower Iron Dispersant

Company Name: INEOS USA LLC
Address: 2357 Standard Avenue
Part 70: 089-25489-00076
Reviewer: Source calculations verified by ERG/JR
Date: February 9, 2007

Iron Dispersant Injection Rate (gal/day)	12.6	*Based on vendor recommendations*
Density of Iron Dispersant (lb/gal)	8.94	*Maximum of Range from MSDS*
Weight Percent Volatile (%)	3%	*Mid-point of Range from MSDS based on information from vendor's technical representative*
Cooling Tower Makeup Rate (gpm)	163	
Cooling Tower Blowdown Rate (gpm)	44	
Cooling Tower Evaporation Rate (gpm)	119	*Cooling Tower Makeup Rate (gpm) - Cooling Tower Blowdown Rate (gpm)*
Fraction of Cooling Tower Water Evaporated	73.0%	*Cooling Tower Evaporation Rate (gpm) / Cooling Tower Makeup Rate (gpm)*
VOC Emissions (lbs/day)	2.47	*Conservatively assumes that all of the VOC is emitted in the evaporated cooling tower water. Iron*
VOC Emissions (tpy)	**0.45**	*Assuming 365 days of operation per year*

Notes:
An iron dispersant is added to the cooling tower water to prevent iron buildup. There are no HAPs in the cooling tower iron dispersant.

Appendix A: Emission Calculations
VOC Emissions from Insignificant Steam Condensate Corrosion Inhibitor

Company Name: INEOS USA LLC
Address: 2357 Standard Avenue
Part 70: 089-25489-00076
Reviewer: Source calculations verified by ERG/JR
Date: February 9, 2007

Steam Corrosion Inhibitor Injection Rate (gal/day)	1.5	*Based on vendor recommendations*
Density of Steam Condensate Corrosion Inhibitor (lb/gal)	8.75	*Maximum of Range from MSDS*
Weight Percent Volatile	80%	*Mid-point of Range from MSDS based on information from vendor's technical representative*
Weight Percent Loss	25%	*Engineering estimate based on the assumption that 75% of the material is contained in the*
VOC Emissions (lbs/day)	2.63	*Conservatively assumes that all of the material not dissolved in the blowdown is emitted.*
VOC Emissions (tpy)	**0.48**	

Notes:
A corrosion inhibitor is injected into the steam system to prevent corrosion by steam condensate. There are no HAPs in the steam condensate corrosion inhibitor.

Appendix A: Emission Calculations
VOC Emissions from Insignificant Hot Oil Storage Drum (SD-128) and Hot Oil System

Company Name: INEOS USA LLC
Address: 2357 Standard Avenue
Part 70: 089-25489-00076
Reviewer: Source calculations verified by ERG/JR
Date: February 9, 2007

Annual Hot Oil System Additions (gallons/year)	50	*Total loss amount (including liquids via maintenance)*
Density of Hot Oil (lb/gal)	9.174	*From MSDS*
Weight Percent Volatile	100%	*Presumed based on constituents listed on MSDS*
Weight Percent HAPs	40%	*Polycyclic Organic Matter (POM) - diphenyl oxide CAS No. 101-84-8*
Percentage Liquid Recovered	50%	*Estimated percentage of liquid loss recovered by maintenance activity*
VOC Emissions (tpy)	**0.11**	*Annual Hot Oil System Additions (gals/year)*Percentage Liquid Recovered*Density of Hot Oil (lb/gal)*Weight Percent Volatile * (1 ton/2,000 lbs)*
HAP Emissions (tpy)	**0.05**	*Annual Hot Oil System Additions (gals/year)*Percentage Liquid Recovered*Density of Hot Oil (lb/gal)*Weight Percent HAPs * (1 ton/2,000 lbs)*

Notes:
The hot oil storage drum is a pressurized reservoir for the hot oil system. The losses from this system are estimated below based on the annual hot oil system makeup.

Appendix A: Emission Calculations
VOC Emissions from Insignificant Parts Washer Solvent

Company Name: INEOS USA LLC
Address: 2357 Standard Avenue
Part 70: 089-25489-00076
Reviewer: Source calculations verified by ERG/JR
Date: February 9, 2007

Annual Parts Washer Solvent Usage (gallons/year)	100	*Estimated total makeup solvent used per year*
Density of Solvent (lb/gal)	6.51	*Based on specific gravity from MSDS*
VOC Content (g/liter)	780	*From MSDS*
Conversion Factor - g/lb	453.5924	
Conversion Factor - liter/gal	3.785412	
VOC Content (lb/gal)	6.51	
VOC Emissions (tpy)	**0.33**	*Assumes that all of the makeup solvent is emitted*

Notes:
A parts washer is used by the maitenance department. There are no HAPs in the parts washer solvent material.

Appendix A: Emission Calculations
VOC Emissions from Insignificant API Separator

Company Name: INEOS USA LLC
Address: 2357 Standard Avenue
Part 70: 089-25489-00076
Reviewer: Source calculations verified by ERG/JR
Date: February 9, 2007

	Length (ft)	Width (ft)	Height of Liquid (for Working Volume) (ft)	Total Height (including freeboard for equivalent diameter) (ft)	Calculated Total Volume with Headspace (ft^3)	Calculated Total Working Volume for TANKS (ft^3)	Equivalent Diameter (ft)
API Separator	55	30	1	3	4950	1650	10.70

Notes:

The API Separator emissions were estimated using the standing losses equations from the US EPA TANKS version 4.09d program, assuming the API Separator was a flow-through tank in which the level remains relatively constant. It was presumed that 1 foot of oily material was on the surface of the water and that two feet of freeboard/headspace was provided at all times. The working volume is based on the oily material height, while the equivalent diameter is based on the height including the freeoard.

It was presumed that the oily mixture was similar to No. 6 residual oil since the products at INEOS Oligomers are relatively non-volatile.

Since only standing losses are included, the throughput is not relevant. However, for consistency, a throughput of 2,040,000 gallons per year from the original Title V application Form PI-14 for Tank RF-145, the slop oil tank, was used.

TANKS 4.09d Results

Standing Losses (lbs/yr)	0.08
Estimated VOC Emissions (tpy)	**4.0E-05**

Appendix A: Emission Calculations
Limited PTE Summary

Company Name: INEOS USA LLC
Address: 2357 Standard Avenue
Part 70: 089-25489-00076
Reviewer: Source calculations verified by ERG/JR
Date: February 9, 2007

Potential To Emit before Control (tpy):

Emission Units	PM	PM10	SO2	NOx	VOC	CO	Worst Single HAP	Total HAPs
Storage Silo (EU-1)	0.18	0.18	-	-	-	-	-	-
Hot Oil Furnace (EU-4)	0.1	0.3	0.03	4.29	0.24	3.61	0.02, Hexane	0.02
Cooling Tower (RT601)	6.92	6.44	-	-	3.3	-	-	-
PIB Flare	0.84	0.84	0.06	7.71	*	41.9	*	*
VRU (EU-5)	-	-	-	-	612.4	-	9.02, 1,3 BD	9.21
Loading/Unloading (EU-2 and EU-3)	-	-	-	-	72.6	-	0.68, 1,3 BD	0.70
Loading/Unloading (EU-7)	-	-	-	-	174.7	-	2.57, 1,3 BD	2.63
Neutralizer Tank -Load (SD-134)	-	-	-	-	0.02	-	0.02, Methanol	0.02
Hydrotreater	-	-	-	-	156.8	-	2.31, 1,3 BD	2.36
Process Gas from BP Whiting Refinery	-	-	-	-	3330	-	-	-
Fugitives	-	-	-	-	28.5	-	0.38, 1,3 BD	0.43
Storage Tanks**	-	-	-	-	0.55	-	-	-
Other Insignificant Activities							-	
Paved Roads	1.14	0.22	-	-	-	-	-	-
Lab	-	-	-	-	0.02	-	-	-
Gasoline and Diesel Tanks	-	-	-	-	0.01	-	-	-
Cooling Tower Iron Dispersant	-	-	-	-	0.45	-	-	-
Steam Condensate Corrosion Inhibitor	-	-	-	-	0.48	-	-	-
Hot Oil System Losses	-	-	-	-	0.11	-	0.05, POM	0.05
Parts Washer	-	-	-	-	0.33	-	-	-
API Separator	-	-	-	-	Negligible	-	-	-
Total PTE	**9.2**	**8.0**	**0.1**	**12.0**	**4380.2**	**45.6**	**15.0** (1,3 Butadiene)	**15.4**

*VOC and HAP emissions prior to the flare control are attributed to the VRU, Loading/Unloading Racks, Neutralizer Tank, Hydrotreater, and Process Gas from the BP Whiting Refinery.
** Emissions from the storage tanks were calculated by the Permittee using EPA TANKS software (Version 2, November 1993).

Limited Potential To Emit after Control (tpy):

Emission Units	PM	PM10	SO2	NOx	VOC	CO	Worst Single HAP	Total HAPs
Storage Silo (EU-1)	1.80E-03	1.80E-03	-	-	-	-	-	-
Hot Oil Furnace (EU-4)	0.08	0.33	0.0	4.29	0.24	3.61	0.02, Hexane	0.02
Cooling Tower (RT601)	6.92	6.44	-	-	3.3	-	-	-
PIB Flare	0.84	0.84	0.06	7.71	*	41.9	*	*
VRU (EU-5)	-	-	-	-	6.1	-	0.09, 1,3 BD	0.09
Loading/Unloading (EU-2 and EU-3)	-	-	-	-	3.0	-	0.01, 1,3 BD	0.01
Loading/Unloading (EU-7)	-	-	-	-	1.75	-	0.03, 1,3 BD	0.03
Neutralizer Tank -Load (SD-134)	-	-	-	-	Negligible	-	Negligible	Negligible
Hydrotreater	-	-	-	-	1.57	-	0.02, 1,3 BD	0.02
Process Gas from BP Whiting Refinery	-	-	-	-	33.3	-	-	-
Fugitives	-	-	-	-	10.7	-	0.38, 1,3 BD	0.43
Storage Tanks**	-	-	-	-	0.55	-	-	-
Other Insignificant Activities							-	
Paved Roads	1.14	0.22	-	-	-	-	-	-
Lab	-	-	-	-	0.02	-	-	-
Gasoline and Diesel Tanks	-	-	-	-	0.01	-	-	-
Cooling Tower Iron Dispersant	-	-	-	-	0.45	-	-	-
Steam Condensate Corrosion Inhibitor	-	-	-	-	0.48	-	-	-
Hot Oil System Losses	-	-	-	-	0.11	-	0.05, POM	0.05
Parts Washer	-	-	-	-	0.33	-	-	-
API Separator	-	-	-	-	Negligible	-	-	-
Total PTE	**9.0**	**7.8**	**0.1**	**12.0**	**86.2** **(See Note "*")**	**45.6**	**0.60** (1,3 Butadiene)	**0.65**

* The total estimated VOC emissions from the flare are 45.8 tpy, based on 99% control efficiency. Emissions are attributed to the VRU, Loading/Unloading Racks, Neutralizer Tank, Hydrotreater, and Process Gas from the BP Whiting Refinery. The source requested to increase this total by a 53% as a safety factor.
** Emissions from the storage tanks were calculated by the Permittee using EPA TANKS software (Version 4.0.9d).

Appendix B
Best Available Control Technology (BACT) Determinations

Source Background and Description

Source Name:	INEOS USA, LLC
Source Location:	2357 Standard Avenue, Whiting, IN 46394
County:	Lake
SIC Code:	2821
Operation Permit No.:	089-25489-00076
Permit Reviewer:	ERG/JR

The Indiana Department of Environmental Management (IDEM), Office of Air Quality (OAQ) has performed the following Best Available Control Technology (BACT) review for the existing chemical plant (consisting of one loading rack EU-2, one unloading rack EU-3, one vapor recovery unit EU-5, and one hydrotreater EU-8), owned and operated by the INEOS USA, LLC, located at 2357 Standard Avenue, Whiting, IN 46394.

Pursuant to 326 IAC 8-1-6 (New Facilities; General Reduction Requirements), BACT is required for all facilities constructed after January 1, 1980 that have potential VOC emissions of equal to or greater than twenty-five (25) tons per year and that are not regulated by other rules in 326 IAC 8. Based on the calculations (see Appendix A) and the analysis of applicable state regulations (see State Rule Applicability section of TSD), the chemical plant is subject to the requirements of 326 IAC 8-1-6.

IDEM, OAQ conducts BACT analyses in accordance with the *"Top-Down" Best Available Control Technology* process, which outlines the steps for conducting a top-down BACT analysis. Those steps are listed below:

(a) Identify all potentially available control options;

(b) Eliminate technically infeasible control options;

(c) Rank remaining control technologies by control effectiveness;

(d) Evaluate the most effective controls and document the results as necessary; and

(e) Select BACT.

In accordance with EPA guidance, the BACT analysis should take into account the energy, environmental, and economic impacts. Emission reductions may be achieved through the application of available control techniques, changes in process design, and/or operational limitations. These BACT determination is based on the following information:

(a) Information submitted by the source and from vendors/suppliers;

(b) The EPA RACT/BACT/LAER (RBLC) Clearinghouse; and

(c) State and local air quality permits.

Introduction

Emission units associated with the chemical plant (EU-2, EU-3, EU-5, and EU-8) are subject to the requirements of 326 IAC 8-1-6 because the chemical plant was constructed after January 1, 1980 and the potential emissions before controls are greater than 25 tons per year. BACT for the chemical plant was not addressed at the time of initial construction; however, BACT has recently

been evaluated in SSM 089-22011-00076, issued on March 20, 2006, to be 99% control efficiency of an open flare for the rail loading/unloading rack system, identified as EU-7. The Permittee has proposed to use the same existing open flare (PIB Flare) to control the VOC emissions from other emission units associated with the chemical plant (EU-2, EU-3, EU-5, and EU-8).

Step 1 – Identify all potentially available control options

The following available technologies were identified and evaluated to control VOC emissions from the chemical plant:

(a) IDEM, OAQ reviewed the following five control technologies:

(1) Open or Closed Flare:

Flares (open or closed) can be used to control almost any VOC stream and can handle fluctuations in VOC concentration, flow rate, heat content, and inert content. Flaring is appropriate for continuous, batch, and variable flow vent stream application. Some streams, such as those containing halogenated or sulfur-containing compounds, are usually not flared because they corrode the flare tip or cause formation of secondary pollutants (such as acid gases or sulfur dioxide). A flare normally provides a VOC destruction efficiency greater than 98%.

(2) Regenerative Thermal Oxidation:

Thermal oxidation is a means often used to control emissions of VOCs from process industries. Oxidation of the VOCs occurs with adequate residence time for complete combustion, sufficiently high temperatures for VOC destruction, and adequate velocities to ensure proper mixing without quenching combustion. The type of burners and their arrangement affect combustion rates and residence time. The more thorough the contact between the flame and VOC, the shorter the time required for complete combustion. Natural gas is required to ignite the flue gas mixtures and maintain combustion temperatures. Typically, a heat exchanger upstream of the oxidizer uses the heat content of the oxidizer flue gas to preheat the incoming VOC-laden stream to improve the efficiency of the oxidizer. A Regenerative Thermal Oxidizer (RTO) builds on the thermal oxidation operating principals but at greatly enhanced fuel efficiency. An RTO consists of two or more heat exchangers connected by a common combustion chamber or zone. The heat exchangers consist of beds filled with media which will allow air to pass while serving a mass to transfer and store heat. The media material selection, size, and shape can vary greatly and substantially impact the design and utility efficiency of the RTO. A RTO normally provides a VOC destruction efficiency greater than 98%.

(3) Carbon Adsorption:

Carbon adsorption is a process by which VOC is retained on a granular carbon surface, which is highly porous and has a very large surface-to-volume ratio. Organic vapors retained on the adsorbent are thereafter desorbed and both the adsorbate and absorbent are recovered.

Carbon adsorption systems operate in two phases: adsorption and desorption. Adsorption is rapid and removes most of the VOCs in the stream. Eventually, the adsorbent becomes saturated with the vapors and the system's efficiency drops. The adsorbent must be regenerated or replaced soon after efficiency begins to decline. In regenerative systems, the adsorbent is reactivated with steam or hot air and the absorbate (solvent) is recovered for reuse or disposal. Non-regenerative systems require the removal of the adsorbent and replacement with fresh or previously regenerated carbon.

(4) Catalytic Oxidation:

In a catalytic oxidizer, a catalyst is used to lower the activation energy for oxidation. When a preheated gas stream is passed through a catalytic oxidizer, the catalyst bed initiates and promotes the oxidation of VOCs without being permanently altered itself. In catalytic oxidization, combustion occurs at significantly lower temperatures than that of direct flame units and can also achieve a destruction efficiency of 95%. However, steps must be taken to ensure complete combustion. The types of catalysts used include platinum, platinum alloys, copper chromate, copper oxide, chromium, manganese, and nickel. These catalysts are deposited in thin layers on an inert substrate, usually a honeycomb shaped ceramic.

(5) Wet Scrubbers:

A wet scrubber is an absorption system in which the waste stream is dissolved in a solvent by passing it through a medium containing the solvent. Water is the most commonly used solvent. Other solvents may be used depending on the components of the waste stream.

(b) A search for similar operations associated with this chemical plant (loading/unloading, vapor recovery unit, and hydrotreater) in EPA's RACT/BACT/LAER Clearinghouse (RBLC) and Indiana Air Permits identified the following:

Plant	RBLC ID or Permit #	Date Issued and State	Facility	Control Technology	Stack Test Results and Dates
INEOS USA, LLC	089-22011-00076	3/20/2006 (IN)	Rail Loading & Unloading Rack System	Flare with an overall control efficiency of at least 99%	Not Available
Sunoco, Inc.	07-00451	07/27/2004 (OH)	Railcar and Tank Truck Loading	12.94 tpy for each truck and rail loading rack. Required to comply with 40 CFR 63 Subparts F, G, and H	Not Available
Quad Graphics, Inc.	2000-306-C M-1 PSD	02/03/2004 (OK)	VOC Loading	3.19 tpy; Emission and throughput limits, bottom fill loading, and work practice procedures to minimize emissions	Not Available
British petroleum Chemicals, Inc., Lima Chemicals Complex	03-11250	07/10/2003 (OH)	Butanediol Recovery And Purification	Two alternative control devices (1) plant process flare system and (2) scrubber offgas incinerator; 98% overall control efficiency	Not Available
Orion Refining Corporation (aka Valero)	PSD-LA-619	01/10/2002 (LA)	Marine Tank Vessel Loading Operations	512 lb/hr and 229 tpy; High vapor pressure material (>1.5 PSIA) loaded with vapors directed to thermal oxidizer for VOC destruction	Not Available

Step 2 – Eliminate Technically Infeasible Control Options

After reviewing the above technologies, IDEM, OAQ eliminated closed flare regenerative thermal oxidation, carbon adsorption, catalytic oxidation, and wet scrubbers as not technically feasible for the chemical plant. The reasons for eliminating these control technologies are as follows:

Closed Flare: An enclosed flare at this chemical plant facility is technically infeasible due to safety concerns. The existing elevated open flare is used as a safety purge device to depressurize vessels in cases of power loss, or other catastrophic incidents at the chemical plant. These events utilize the high capacity of the elevated flare relative to ground-level enclosed flares. Additionally, there are safety concerns regarding ground level ignition sources in the

presence of a possible VOC vapor cloud. In the event of a VOC release at the chemical plant, a ground level source of ignition could result in a significant safety hazard.

Furthermore, the installation of an enclosed flare would result in no additional VOC control over the existing elevated flare. U.S. EPA considers flares to be one category of control device with equivalent control efficiency (see U.S. EPA Fact Sheet EPA-452/F-03-019), and therefore there is no control efficiency difference between an enclosed flare and the existing elevated flare.

Regenerative Thermal Oxidation: The chemical plant has several intermittent VOC streams including vapors from loading and unloading which only require venting outside the closed loop process occasionally when a railcar with non-condensable vapors in the headspace is received. Thermal oxidizers take time to heat up to the optimum temperature for destruction and cannot always be immediately ready for use.

Carbon Adsorption: Carbon adsorption uses intermolecular forces to accumulate organic material at the surface of an adsorbent (typically activated carbon). These intermolecular forces include the small momentary dipoles that result from the movement of electrons within molecular bonds (van der Waals interactions). The incidence of van der Waals interactions increases with larger molecules because there are more bonds within each molecule. For this reason, carbon adsorption is most effective for larger molecules. The VOC compounds emitted from the chemical plant include relatively small molecules from unreacted butane/butene (BB) and propylene constituents. Due to the small size of these molecules, the van der Waals interactions are weak. Since carbon adsorption typically requires a VOC concentration of at least 200 to 1,000 ppmv and average VOC molecular weights of at least 50 to 60 atomic units, this technology is considered infeasible for controlling the VOC emissions from the chemical plant.

Catalytic Oxidation: The chemical plant has several intermittent VOC streams including vapors from loading and unloading which only require venting outside the closed loop process occasionally when a railcar with non-condensable vapors in the headspace is received. Catalytic oxidizers take time to heat up to the optimum temperature for destruction and cannot always be immediately ready for use.

Wet Scrubbers: Wet scrubbers are reasonably effective for controlling VOC emissions when the VOCs are easily absorbed in water. Several characteristics control the effectiveness of wet scrubbers for VOC removal. The one parameter that can be easily analyzed to determine if wet scrubbing is effective is the solubility of the pollutants in the absorbent (water). The chemical plant VOC emissions include unreacted butane/butene (BB) and propylene constituents. Some of these compounds have limited solubility in water and, therefore, potentially affect the control efficiency of the scrubber.

Step 3 – Rank Remaining Control Technologies by Control Effectiveness

The technically feasible approaches for controlling VOC emissions from the chemical plant are:

Control Technology	Control Efficiency (%)
Open Flare	Greater than 98%*

* The existing open flare located at INEOS USA, LLC has a manufacturer guarantee of 99% VOC control efficiency.

Step 4 – Evaluate the Most Effective Controls and Document Results

Based on the evaluation of the control technologies, an open flare provides the most effective level of control for this chemical plant with a control efficiency of 99%.

Step 5 – Select BACT

The Permittee has proposed to use the existing open flare (PIB Flare) that controls the rail loading/unloading rack system (EU-7) to control the VOC emissions from other emission units

associated with the chemical plant (EU-2, EU-3, EU-5, and EU-8). IDEM has determined that BACT for the chemical plant is as follows:

(1) The VOC emissions from the chemical plant (EU-2, EU-3, EU-5, and EU-8) shall be controlled by the existing flare (PIB Flare).

(2) The overall control efficiency of PIB Flare shall be at least 99% when controlling the VOC emissions from the chemical plant.