INDIANA DEPARTMENT OF ENVIRONMENTAL MANAGEMENT
We Protect Hoosiers and Our Environment.

Mitchell E. Daniels Jr.
Governor

Thomas W. Easterly
Commissioner

100 North Senate Avenue
Indianapolis, Indiana 46204
(317) 232-8603
Toll Free (800) 451-6027
www.idem.IN.gov

TO: Interested Parties / Applicant

DATE: January 27, 2009

RE: Countrymark Cooperative, LLP / 129-26980-00003

FROM: Matthew Stuckey, Branch Chief
Permits Branch
Office of Air Quality

Notice of Decision: Approval - Effective Immediately

Please be advised that on behalf of the Commissioner of the Department of Environmental Management, I have issued a decision regarding the enclosed matter. Pursuant to IC 13-17-3-4 and 326 IAC 2, this approval is effective immediately, unless a petition for stay of effectiveness is filed and granted, and may be revoked or modified in accordance with the provisions of IC 13-15-7-1.

If you wish to challenge this decision, IC 4-21.5-3-7 and IC 13-15-7-3 require that you file a petition for administrative review. This petition may include a request for stay of effectiveness and must be submitted to the Office Environmental Adjudication, 100 North Senate Avenue, Government Center North, Suite N 501E, Indianapolis, IN 46204, **within eighteen (18) calendar days of the mailing of this notice**. The filing of a petition for administrative review is complete on the earliest of the following dates that apply to the filing:

(1) the date the document is delivered to the Office of Environmental Adjudication (OEA);
(2) the date of the postmark on the envelope containing the document, if the document is mailed to OEA by U.S. mail; or
(3) The date on which the document is deposited with a private carrier, as shown by receipt issued by the carrier, if the document is sent to the OEA by private carrier.

The petition must include facts demonstrating that you are either the applicant, a person aggrieved or adversely affected by the decision or otherwise entitled to review by law. Please identify the permit, decision, or other order for which you seek review by permit number, name of the applicant, location, date of this notice and all of the following:

(1) the name and address of the person making the request;
(2) the interest of the person making the request;
(3) identification of any persons represented by the person making the request;
(4) the reasons, with particularity, for the request;
(5) the issues, with particularity, proposed for considerations at any hearing; and
(6) identification of the terms and conditions which, in the judgment of the person making the request, would be appropriate in the case in question to satisfy the requirements of the law governing documents of the type issued by the Commissioner.

If you have technical questions regarding the enclosed documents, please contact the Office of Air Quality, Permits Branch at (317) 233-0178. Callers from within Indiana may call toll-free at 1-800-451-6027, ext. 3-0178.

Enclosures
FNPER-MOD.dot 12/3/07

INDIANA DEPARTMENT OF ENVIRONMENTAL MANAGEMENT

We Protect Hoosiers and Our Environment.

Mitchell E. Daniels Jr.
Governor

Thomas W. Easterly
Commissioner

100 North Senate Avenue
Indianapolis, Indiana 46204
(317) 232-8603
Toll Free (800) 451-6027
www.idem.IN.gov

Mr. Pankey
Countrymark Cooperative, LLP
1200 Refinery Road
Mount Vernon, IN 47620

January 27, 2009

Re: 129-26980-00003
Significant Permit Modification to
Part 70 No.: T 129-7882-00003

Dear Mr. Pankey:

Countrymark Cooperative, LLP was issued a Part 70 Operating Permit T 129-7882-00003 on July 21, 2003 for a stationary petroleum refinery. A letter requesting changes to this permit was received on August 20, 2008. Pursuant to the provisions of 326 IAC 2-7-12 a significant permit modification to this permit is hereby approved as described in the attached Technical Support Document.

The modification is relating to the construction and operation of a Low Sulfur Gasoline (LSG) Unit. The purpose of this unit is to remove sulfur from the gasoline stream produced in the Fluid Catalytic Cracking Unit (FCCU). The LSG Unit will be located just prior to the blending process. Excess gases will be routed to the Main Refinery Flare; by-product will be routed to the Tail Gas Treatment System and Sulfur Recovery System. The following is a list of the proposed emission units:

(a) One (1) Low Sulfur Gasoline (LSG) Unit consisting of the following equipment:

(1) LSG Reactor Charge Heater (810-H101) approved for construction in 2008, with a maximum capacity of 5.985 MMBtu, combusting refinery fuel gas only, and venting to stack 128.

Under 40 CFR Part 60, Subpart Ja (currently under stay) the LSG Reactor Charge Heater is considered an affected facility.

(2) #5 Cooling Tower with a maximum capacity of 3,600 gpm approved for construction in 2008.

(3) LSG Unit components and drains (800 valves, 16 drains, and 5 pumps) approved for construction in 2008.

Under 40 CFR 63, Subpart CC, equipment leaks associated with a petroleum refinery are considered as an affected facility.

Under 40 CFR 60, Subpart QQQ, new and existing drains are considered affected facilities at a petroleum refinery.

Under 40 CFR 60, Subpart GGGa, valves are considered affected facilities at a petroleum refinery.

Under 40 CFR 61, Subpart FF new and existing drains are considered affected facilities for benzene waste operations.

All other conditions of the permit shall remain unchanged and in effect. Please find attached the entire Part 70 Operating Permit as modified.

This decision is subject to the Indiana Administrative Orders and Procedures Act - IC 4-21.5-3-5. If you have any questions on this matter, please contact Michael S. Brooks, OAQ, 100 North Senate Avenue, MC 61-53 IGCN 1003, Indianapolis, Indiana, 46204-2251, or call at (800) 451-6027, and ask for Michael S. Brooks or extension 4-3494, or dial (317) 234-3494.

Sincerely,

Chrystal A. Wagner, Section Chief
Permits Branch
Office of Air Quality

Attachments

MSB

cc: File - Posey County
U.S. EPA, Region V
Posey County Health Department
Southwest Regional Office
Compliance Data Section
Administrative and Development

INDIANA DEPARTMENT OF ENVIRONMENTAL MANAGEMENT
We Protect Hoosiers and Our Environment.

Mitchell E. Daniels Jr.
Governor

Thomas W. Easterly
Commissioner

100 North Senate Avenue
Indianapolis, Indiana 46204
(317) 232-8603
Toll Free (800) 451-6027
www.idem.IN.gov

PART 70 OPERATING PERMIT
OFFICE OF AIR QUALITY

Countrymark Cooperative, LLP
1200 Refinery Road
Mount Vernon, Indiana 47620

(herein known as the Permittee) is hereby authorized to operate subject to the conditions contained herein, the source described in Section A (Source Summary) of this permit.

The Permittee must comply with all conditions of this permit. Noncompliance with any provisions of this permit is grounds for enforcement action; permit termination, revocation and reissuance, or modification; or denial of a permit renewal application. Noncompliance with any provision of this permit, except any provision specifically designated as not federally enforceable, constitutes a violation of the Clean Air Act. It shall not be a defense for the Permittee in an enforcement action that it would have been necessary to halt or reduce the permitted activity in order to maintain compliance with the conditions of this permit. An emergency does constitute an affirmative defense in an enforcement action provided the Permittee complies with the applicable requirements set forth in Section B, Emergency Provisions.

This permit is issued in accordance with 326 IAC 2 and 40 CFR Part 70 Appendix A and contains the conditions and provisions specified in 326 IAC 2-7 as required by 42 U.S.C. 7401, et. seq. (Clean Air Act as amended by the 1990 Clean Air Act Amendments), 40 CFR Part 70.6, IC 13-15 and IC 13-17

Operation Permit No.: T129-7882-00003	
Issued by: Janet G. McCabe, Assistant Commissioner Office of Air Quality	Issuance Date: July 21, 2003 Expiration Date: July 21, 2008

Significant Permit Modification No.:	129-17940-00003, issued on November 24, 2003.
Significant Permit Modification No.:	129-20112-00003, issued on March 21, 2005.
Administrative Amendment No.:	129-20343-00003, issued on March 30, 2005.
Significant Permit Modification No.:	129-21251-00003, issued on August 15, 2005.
Significant Permit Modification No.:	129-23090-00003, issued January 30, 2007.
Significant Permit Modification No.:	129-24761-00003, issued December 17, 2007.

Significant Permit Modification No.: 129-26980-00003	Pages affected: 11, 14, 17, 18, 79, 89, 117, 118, and 146-149.
Issued by: Chrystal A. Wagner, Section Chief Permits Branch Office of Air Quality	Issuance Date: January 27, 2009 Expiration Date: January 27, 2014

TABLE OF CONTENTS

SECTION A SOURCE SUMMARY 7
A.1 General Information [326 IAC 2-7-4(c)] [326 IAC 2-7-5(15)] [326 IAC 2-7-1(22)] 7
A.2 Part 70 Source Definition [326 IAC 2-7-1(22)] 7
A.3 Emission Units and Pollution Control Equipment Summary [326 IAC 2-7-4(c)(3)] [326 IAC 2-7-5(15)] 7
A.4 Specifically Regulated Insignificant Activities [326 IAC 2-7-1(21)] [326 IAC 2-7-4(c)] [326 IAC 2-7-5(15)] 16
A.5 Part 70 Permit Applicability [326 IAC 2-7-2] 17

SECTION B GENERAL CONDITIONS 18
B.1 Definitions [326 IAC 2-7-1] 18
B.2 Permit Term [326 IAC 2-7-5(2)] [326 IAC 2-1.1-9.5] [326 IAC 2-7-4(a)(1)(D)] [IC 13-15-3-6(a)] 18
B.3 Term of Conditions [326 IAC 2-1.1-9.5] 18
B.4 Enforceability [326 IAC 2-7-7] 18
B.5 Severability [326 IAC 2-7-5(5)] 18
B.6 Property Rights or Exclusive Privilege [326 IAC 2-7-5(6)(D)] 18
B.7 Duty to Provide Information [326 IAC 2-7-5(6)(E)] 18
B.8 Certification [326 IAC 2-7-4(f)] [326 IAC 2-7-6(1)] [326 IAC 2-7-5(3)(C)] 18
B.9 Annual Compliance Certification [326 IAC 2-7-6(5)] 19
B.10 Preventive Maintenance Plan [326 IAC 2-7-5(1),(3) and (13)] [326 IAC 2-7-6(1) and (6)] [326 IAC 1-6-3] 19
B.11 Emergency Provisions [326 IAC 2-7-16] 20
B.12 Permit Shield [326 IAC 2-7-15] [326 IAC 2-7-20] [326 IAC 2-7-12] 22
B.13 Prior Permits Superseded [326 IAC 2-1.1-9.5] [326 IAC 2-7-10.5] 24
B.14 Termination of Right to Operate [326 IAC 2-7-10] [326 IAC 2-7-4(a)] 24
B.15 Deviations from Permit Requirements and Conditions [326 IAC 2-7-5(3)(C)(ii)] 24
B.16 Permit Modification, Reopening, Revocation and Reissuance, or Termination [326 IAC 2-7-5(6)(C)] [326 IAC 2-7-8(a)] [326 IAC 2-7-9] 24
B.17 Permit Renewal [326 IAC 2-7-3] [326 IAC 2-7-4] [326 IAC 2-7-8(e)] 25
B.18 Permit Amendment or Modification [326 IAC 2-7-11] [326 IAC 2-7-12] [40 CFR 72] 25
B.19 Permit Revision Under Economic Incentives and Other Programs [326 IAC 2-7-5(8)] [326 IAC 2-7-12(b)(2)] 26
B.20 Operational Flexibility [326 IAC 2-7-20] [326 IAC 2-7-10.5] 26
B.21 Source Modification Requirement [326 IAC 2-7-10.5] 27
B.22 Inspection and Entry [326 IAC 2-7-6] [IC 13-14-2-2] [IC 13-30-3-1] [IC 13-17-3-2] 27
B.23 Transfer of Ownership or Operational Control [326 IAC 2-7-11] 28
B.24 Annual Fee Payment [326 IAC 2-7-19] [326 IAC 2-7-5(7)] [326 IAC 2-1.1-7] 28
B.25 Credible Evidence [326 IAC 2-7-5(3)] [326 IAC 2-7-6] [62 FR 8314] [326 IAC 1-1-6] 28

SECTION C SOURCE OPERATION CONDITIONS 29

Emission Limitations and Standards [326 IAC 2-7-5(1)] 29
C.1 Particulate Emission Limitations For Processes with Process Weight Rates Less Than One Hundred (100) Pounds per Hour [326 IAC 6-3-2] 29
C.2 Opacity [326 IAC 5-1] 29
C.3 Open Burning [326 IAC 4-1] [IC 13-17-9] 29
C.4 Incineration [326 IAC 4-2] [326 IAC 9-1-2] 29
C.5 Fugitive Dust Emissions [326 IAC 6-4] 29
C.6 Asbestos Abatement Projects [326 IAC 14-10] [326 IAC 18] [40 CFR 61, Subpart M] 29

Testing Requirements [326 IAC 2-7-6(1)] 30
C.7 Performance Testing [326 IAC 3-6] 30

Compliance Requirements [326 IAC 2-1.1-11] 31
C.8 Compliance Requirements [326 IAC 2-1.1-11] 31

Compliance Monitoring Requirements [326 IAC 2-7-5(1)] [326 IAC 2-7-6(1)] 31
C.9 Compliance Monitoring [326 IAC 2-7-5(3)] [326 IAC 2-7-6(1)] 31
C.10 Maintenance of Continuous Opacity Monitoring Equipment [326 IAC 2-7-5(3)(A)(iii)] 31

C.11 Maintenance of Continuous Emission Monitoring Equipment [326 IAC 2-7-5(3)(A)(iii)] 32
C.12 Monitoring Methods [326 IAC 3] [40 CFR 60] [40 CFR 63] 32
C.13 Instrument Specifications [326 IAC 2-1.1-11] [326 IAC 2-7-5(3)] [326 IAC 2-7-6(1)] 32

Corrective Actions and Response Steps [326 IAC 2-7-5] [326 IAC 2-7-6] 33
C.14 Emergency Reduction Plans [326 IAC 1-5-2] [326 IAC 1-5-3] 33
C.15 Risk Management Plan [326 IAC 2-7-5(12)] [40 CFR 68] 33
C.16 Response to Excursions or Exceedances [326 IAC 2-7-5] [326 IAC 2-7-6] 33
C.17 Actions Related to Noncompliance Demonstrated by a Stack Test [326 IAC 2-7-5] [326 IAC 2-7-6] 34

Record Keeping and Reporting Requirements [326 IAC 2-7-5(3)] [326 IAC 2-7-19] 34
C.18 Emission Statement [326 IAC 2-7-5(3)(C)(iii)] [326 IAC 2-7-5(7)] [326 IAC 2-7-19(c)] [326 IAC 2-6] 34
C.19 General Record Keeping Requirements [326 IAC 2-7-5(3)] [326 IAC 2-7-6] [326 IAC 2-2] [326 IAC 2-3] 35
C.20 General Reporting Requirements [326 IAC 2-7-5(3)(C)] [326 IAC 2-1.1-11] [326 IAC 2-2] [326 IAC 2-3] 36

Stratospheric Ozone Protection 37
C.21 Compliance with 40 CFR 82 and 326 IAC 22-1 37

SECTION D.1 FACILITY OPERATION CONDITIONS 38

Emission Limitations and Standards [326 IAC 2-7-5(1)] 38
D.1.1 General Provisions Relating to HAPs [326 IAC 20-1-1] [40 CFR Part 63, Subpart A] 38
D.1.2 Gasoline Distribution Facilities NESHAP [326 IAC 20-10-1] [40 CFR 63, Subpart R] 38
D.1.3 Standards for Volatile Organic Compound (VOC) Emissions from Loading Racks [40 CFR 63.422] 38
D.1.4 Preventive Maintenance Plan [326 IAC 2-7-5(13)] 39

Compliance Determination Requirements [326 IAC 2-1.1-11] [326 IAC 2-7-6(1)] 39
D.1.5 Performance Testing [40 CFR 63.425] 39

Compliance Monitoring Requirements [326 IAC 2-7-6(1)] [326 IAC 2-7-5(1)] 41
D.1.6 Continuous Monitoring [40 CFR 63.427] 41

Record Keeping and Reporting Requirements [326 IAC 2-7-5(3)] [326 IAC 2-7-19] 42
D.1.7 Record Keeping Requirements [40 CFR 63.428] 42
D.1.8 Reporting Requirements [40 CFR 63.428] 43

SECTION D.2 FACILITY OPERATION CONDITIONS 44

Emission Limitations and Standards [326 IAC 2-7-5(1)] 44
D.2.1 General Provisions Relating to HAPs [326 IAC 12-1-1] [40 CFR Part 60, Subpart A] 44
D.2.2 General Provisions Relating to HAPs [326 IAC 20-1-1] [40 CFR Part 63, Subpart A] 45
D.2.3 Petroleum Refineries NSPS [326 IAC 12-1-1] [40 CFR 60, Subpart J] 45
D.2.4 Petroleum Refineries NESHAP [326 IAC 20-1-1] [40 CFR 63, Subpart UUU] 45
D.2.5 Standards for Sulfur Oxides Emissions from Fuel Gas Combustion Devices [40 CFR 60.104] 45
D.2.6 NESHAP for Industrial, Commercial, and Institutional Boilers and Process Heaters [326 IAC 20-1-1] [40 CFR Part 63, Subpart DDDDD] 45
D.2.7 Standards for Metal HAP Emissions from Catalytic Cracking Units [40 CFR 63.1564] 46
D.2.8 Standards for Organic HAP Emissions from Catalytic Cracking Units [40 CFR 63.1565] 46
D.2.9 Standards for Organic HAP Emissions from Catalytic Reforming Units [40 CFR 63.1566]47
D.2.10 Standards for Inorganic HAP Emissions from Catalytic Reforming Units [40 CFR 63.1567]47
D.2.11 Standards for HAP Emissions from Sulfur Recovery Units [40 CFR 63.1568] [326 IAC 20-50-1] 48
D.2.12 Standards for HAP Emissions from Bypass Lines [40 CFR 63.1569] [326 IAC 20-50-1] 48
D.2.13 Emission Limits and Work Practice Standards [326 IAC 20-1-1] [40 CFR Part 63, Subpart DDDDD] 48
D.2.14 Preventive Maintenance Plan [326 IAC 2-7-5(13)] 49

Compliance Determination Requirements [326 IAC 2-1.1-11] [326 IAC 2-7-6(1)] 49
D.2.15 Performance Testing [40 CFR 60.106] 49

D.2.16 Initial Compliance Demonstration [40 CFR 63.1564 - 1569] [326 IAC 20-50-1] 49
D.2.17 Performance Testing [40 CFR 63.1571] 52
D.2.18 Testing, Fuel Analyses, and Initial Compliance Requirements [40 CFR 63.7510] [40 CFR 63.7515] [40 CFR 63.7520] 53

Compliance Monitoring Requirements [326 IAC 2-7-6(1)] [326 IAC 2-7-5(1)]..... 55
D.2.19 Continuous Monitoring [40 CFR 60.105] 55
D.2.20 General Compliance Requirements [40 CFR 63.1570] [326 IAC 20-50-1] 57
D.2.21 Monitoring Installation, Operation, and Maintenance Requirements [40 CFR 63.1572] [326 IAC 20-50-1] 57
D.2.22 General Compliance Requirements [40 CFR 63.7505] 59
D.2.23 Monitoring, Installation, Operation, and Maintenance Requirements [40 CFR 63.7525] 60
D.2.24 Initial Compliance with the Emission Limits and Work Practice Standards [40 CFR 63.7530] 62
D.2.25 Continuous Compliance Requirements [40 CFR 63.7535] 63

Record Keeping and Reporting Requirements [326 IAC 2-7-5(3)] [326 IAC 2-7-19]..... 65
D.2.26 Record Keeping Requirements 65
D.2.27 Record Keeping Requirements [40 CFR 63.1576] 65
D.2.28 Notifications [40 CFR Part 63.1574] [326 IAC 20-50-1] 66
D.2.29 Reporting Requirements [40 CFR Part 63.1575] [326 IAC 20-50-1] 67
D.2.30 Notification Requirements [40 CFR Part 63.7545] 70
D.2.31 Recordkeeping Requirements [40 CFR Part 63.7555 and 7560] 71
D.2.32 Reporting Requirements [40 CFR Part 63.7550] 73

SECTION D.3 FACILITY OPERATION CONDITIONS 75

Emission Limitations and Standards [326 IAC 2-7-5(1)]..... 79
D.3.1 General Provisions Relating to NSPS and NESHAP [326 IAC 12-1-1] [40 CFR Part 60, Subpart A] [326 IAC 20-1-1] [40 CFR Part 63, Subpart A] 79
D.3.2 Volatile Organic Liquid Storage Vessels NSPS [326 IAC 12] [40 CFR 60, Subpart K] 80
D.3.3 Volatile Organic Liquid Storage Vessels NSPS [326 IAC 12] [40 CFR Part 60, Subpart Kb]80
D.3.4 Standards for Volatile Organic Compounds Emissions from Storage Vessels [40 CFR 60.112] [Subpart K] 80
D.3.5 Standards for Volatile Organic Compounds Emissions from Storage Vessels [40 CFR 60.112b] [Subpart Kb] 80
D.3.6 Storage Vessel Provisions [326 IAC 20-10-1] [40 CFR Part 63, Subpart CC] 81
D.3.7 Volatile Organic Compounds (VOC) [326 IAC 8-4-3] 81
D.3.8 Preventive Maintenance Plan [326 IAC 2-7-5(13)] 82

Compliance Determination Requirements [326 IAC 2-1.1-11] [326 IAC 2-7-6(1)] 82
D.3.9 Performance Testing [40 CFR 60.113b] 82

Compliance Monitoring Requirements [326 IAC 2-7-6(1)] [326 IAC 2-7-5(1)]..... 83
D.3.10 Monitoring of Storage Vessels [40 CFR 60.113] [40 CFR 60.116b] 83

Record Keeping and Reporting Requirements [326 IAC 2-7-5(3)] [326 IAC 2-7-19]..... 84
D.3.11 Record Keeping and Reporting [40 CFR 60.115b] 84
D.3.12 VOC Record Keeping Requirements [326 IAC 8-4-3] [40 CFR 60.115b] [40 CFR 60.110b]85

SECTION D.4 FACILITY OPERATION CONDITIONS 86

Emission Limitations and Standards [326 IAC 2-7-5(1)]..... 87
D.4.1 General Provisions Relating to NSPS and NESHAP [326 IAC 12-1-1] [40 CFR Part 60, Subpart A] [326 IAC 20-1-1] [40 CFR Part 63, Subpart A] 87
D.4.2 Equipment Leaks of VOC in Petroleum Refineries [326 IAC 12-1-1] [40 CFR Part 60, Subpart GGG] 88
D.4.3 Petroleum Refineries NESHAP [326 IAC 20-1-1] [40 CFR Part 63, Subpart CC] 88
D.4.4 VOC Emissions From Petroleum Refinery Wastewater Systems [326 IAC 12-1-1] [40 CFR Part 60, Subpart QQQ] 88
D.4.5 Standards of Performance for Equipment Leaks of VOC in Petroleum Refineries [40 CFR 60.592] [326 IAC 12] 88
D.4.6 General Standards - NESHAP for Petroleum Refineries [326 IAC 20-10-1] [40 CFR Part 63, Subpart CC] 89

D.4.7 Storage Vessel Provisions [326 IAC 20-10-1] [40 CFR Part 63, Subpart CC] 90
D.4.8 Equipment Leak Standards [326 IAC 20-10-1] [40 CFR Part 63, Subpart CC] 91
D.4.9 Alternative Means of Emission Limitation: Connectors in gas/vapor service and light liquid service [326 IAC 20-10-1] [40 CFR Part 63, Subpart CC] 93
D.4.10 Emission Averaging Provisions [326 IAC 20-10-1] [40 CFR Part 63, Subpart CC] 94
D.4.11 General Standards [40CFR 60.692-1] [326 IAC 12] 94
D.4.12 Standards for Individual Drain Systems [40 CFR 60.692-2] [326 IAC 12] 95
D.4.13 Standards for Oil Water Separators [40CFR 60.692-3] [326 IAC 12] 95
D.4.14 Standards for Aggregate Facilities [40 CFR 60.692-4] [326 IAC 12] 96
D.4.15 Standards for Closed Vent Systems and Control Devices [40 CFR 60.692-5] [326 IAC 12]96
D.4.16 Standards for Closed Vent Systems and Control Devices [40 CFR 60.692-6] [326 IAC 12]97
D.4.17 Standards for Closed Vent Systems and Control Devices [40 CFR 60.692-6] [326 IAC 12]97
D.4.18 Preventive Maintenance Plan [326 IAC 2-7-5(13)] 97

Compliance Determination Requirements 97
D.4.19 Performance Test Methods and Procedures [40 CFR 60.696] [326 IAC 12] 97

Compliance Monitoring Requirements [326 IAC 2-7-6(1)] [326 IAC 2-7-5(1)] 98
D.4.20 Monitoring, Recordkeeping, and Implementation Plan for Emissions Averaging [326 IAC 20-10-1] [40 CFR Part 63, Subpart CC] 98
D.4.21 Monitoring Requirements [40 CFR 60.695] [326 IAC 12] 99

Record Keeping and Reporting Requirement [326 IAC 2-7-5(3)] [326 IAC 2-7-19] 100
D.4.22 Reporting and Record Keeping Requirements [326 IAC 20-10-1] [40 CFR Part 63.654, Subpart CC] 100
D.4.23 Recordkeeping Requirements [40 CFR 60.696] [326 IAC 12] 110
D.4.24 Reporting Requirements [40 CFR 60.698] [326 IAC 12] 112

SECTION D.5 FACILITY OPERATION CONDITIONS 114

Emission Limitations and Standards [326 IAC 2-7-5(1)] 115
D.5.1 Particulate Matter (PM) 115
D.5.2 Particulate Matter (PM) [326 IAC 6-2-4] 116
D.5.3 Sulfur Dioxide (SO2) [326 IAC 7-1.1-1] [326 IAC 7-2-1] 116
D.5.4 No. 6 Fuel Usage [326 IAC 2-2] 116
D.5.5 General Provisions Relating to NESHAP [326 IAC 20-1] [40 CFR Part 63, Subpart A] 116
D.5.6 National Emission Standards for Hazardous Air Pollutants for Industrial, Commercial, and Institutional Boilers and Process Heaters [40 CFR Part 63, Subpart DDDDD] 116

Compliance Determination Requirements 117
D.5.7 Sulfur Dioxide Emissions and Sulfur Content 117

Compliance Monitoring Requirements [326 IAC 2-5.1-3(e)(2)] [326 IAC 2-6.1-5(a)(2)] 117
D.5.8 Visible Emissions Notations 117

Record Keeping and Reporting Requirement [326 IAC 2-7-5(3)] [326 IAC 2-7-19] 117
D.5.9 Record Keeping Requirements 117
D.5.10 National Emission Standards for Hazardous Air Pollutants for Industrial, Commercial, and Institutional Boilers and Process Heaters - Notification Requirements [40 CFR 63, Subpart DDDDD] 118

SECTION D.6 FACILITY OPERATION CONDITIONS 119

Emission Limitations and Standards [326 IAC 2-7-5(1)] 119
D.6.1 Particulate Matter Emission Limitations For Processes with Process Weight Rates Less Than One Hundred (100) pounds per hour [326 IAC 6-3-2(c)] 119

SECTION E.1 FACILITY OPERATION CONDITIONS 120

Emission Limitations and Standards [326 IAC 2-7-5(1)] 120
E.1.1 Sulfur Dioxide (SO2) [326 IAC 7-1.1-1] [326 IAC 7-2-1] 120
E.1.2 PSD Minor Limit [326 IAC 2-2] 120
E.1.3 General Provisions Relating to NSPS [326 IAC 12-1] [40 CFR 60, Subpart A] 120
E.1.4 Standards of Performance for Small Industrial-Commercial-Institutional Steam Generating Units [40 CFR Part 60, Subpart Dc] 120

E.1.5 One Time Deadlines Relating to Standards of Performance for Small Industrial-Commercial-Institutional Steam Generating Units NSPS [40 CFR 60, Subpart Dc]: 130

Compliance Determination Requirements 130
E.1.6 Sulfur Dioxide Emissions and Sulfur Content 130

Compliance Monitoring Requirements [326 IAC 2-5.1-3(e)(2)] [326 IAC 2-6.1-5(a)(2)] 131
E.1.7 Visible Emissions Notations 131

Record Keeping and Reporting Requirement [326 IAC 2-7-5(3)] [326 IAC 2-7-19] 131
E.1.8 Record Keeping Requirements 131
E.1.9 Reporting Requirements 132

SECTION E.2 FACILITY OPERATION CONDITIONS 133

Emission Limitations and Standards [326 IAC 2-7-5(1)] 133
E.2.1 General Provisions Relating to NSPS [326 IAC 12-1-1] [40 CFR Part 60, Subpart A] 133
E.2.2 Standards of Performance for Volatile Organic Liquid Storage Vessels (Including Petroleum Liquid Storage Vessels) for Which Construction, Reconstruction, or Modification Commenced After July 23, 1984 [40 CFR Part 60, Subpart Kb] 133

SECTION E.3 FACILITY OPERATION CONDITIONS 140
E.3.1 General Provisions Relating to NSPS [326 IAC 12-1-1] [40 CFR Part 60, Subpart A] 140
E.3.2 Standards of Performance for Petroleum Refineries [40 CFR Part 60, Subpart J] 140

SECTION E.4 FACILITY OPERATION CONDITIONS 144
E.4.1 General Provisions Relating to NESHAP Subpart FF [40 CFR Part 61, Subpart A] 144
E.4.2 Benzene Waste Operations NESHAP [40 CFR Part 61, Subpart FF] 144

SECTION E.5 FACILITY OPERATION CONDITIONS 145
E.5.1 General Provisions Relating to NSPS Subpart GGGa [40 CFR Part 60, Subpart A] 145
E.5.2 Standards of Performance for Equipment Leaks of VOC in Petroleum Refineries for Which Construction, Reconstruction, or Modification Commenced After November 7, 2006 NSPS [40 CFR Part 60, Subpart GGGa] 145

SECTION E.6 FACILITY OPERATION CONDITIONS 146
E.6.1 General Provisions Relating to NSPS Subpart Ja [40 CFR Part 60, Subpart A] 146
E.6.2 Standards of Performance for Petroleum Refineries for Which Construction, Reconstruction, or Modification Commenced After May 14, 2007 NSPS [40 CFR Part 60, Subpart Ja (Currently Under Stay Until September 26, 2008)] 146

CERTIFICATION 148

EMERGENCY OCCURRENCE REPORT 149

Part 70 Quarterly Report 151

Part 70 Quarterly Report 152

QUARTERLY DEVIATION AND COMPLIANCE MONITORING REPORT 153

Attachment A 40 CFR 61, Subpart FF

Attachment B 40 CFR 60, Subpart GGGa

Attachment A 40 CFR 60, Subpart Ja

SECTION A SOURCE SUMMARY

This permit is based on information requested by the Indiana Department of Environmental Management (IDEM), Office of Air Quality (OAQ). The information describing the source contained in conditions A.1, A.3, and A.4 is descriptive information and does not constitute enforceable conditions. However, the Permittee should be aware that a physical change or a change in the method of operation that may render this descriptive information obsolete or inaccurate may trigger requirements for the Permittee to obtain additional permits or seek modification of this permit pursuant to 326 IAC 2, or change other applicable requirements presented in the permit application.

A.1 General Information [326 IAC 2-7-4(c)] [326 IAC 2-7-5(15)] [326 IAC 2-7-1(22)]

The Permittee owns and operates a stationary petroleum refinery.

Source Address:	1200 Refinery Road, Mount Vernon, IN 47620
Mailing Address:	1200 Refinery Road, Mount Vernon, IN 47620
General Source Phone Number:	(812) 838-8133
SIC Code:	2911
County Location:	Posey
Source Location Status:	Attainment for all criteria pollutants
Source Status:	Part 70 Permit Program Major Source, under PSD Rules; Major Source, Section 112 of the Clean Air Act 1 of 28 Source Categories

A.2 Part 70 Source Definition [326 IAC 2-7-1(22)]

This stationary petroleum refinery company consists of two (2) plants:

(a) Plant 1, the refinery, is located at 1200 Refinery Road, Mount Vernon, IN 47620; and

(b) Plant 2, the river dock terminal, is located at South Mann St. and Ohio St., Mount Vernon, IN 47620.

Since the two (2) plants are located on contiguous or adjacent properties, belong to the same industrial grouping, and under common control of the same entity, they will be considered one (1) source, effective from the date of issuance of this Part 70 permit.

Separate Part 70 permits will be issued to Countrymark Cooperative, LLP with Permit No.:T129-7882-00003 and Permit No.:129-7742-00037 solely for administrative purposes.

A.3 Emission Units and Pollution Control Equipment Summary [326 IAC 2-7-4(c)(3)] [326 IAC 2-7-5(15)]

This stationary source consists of the following emission units and pollution control devices:

(a) One (1) Truck loading rack, with a maximum capacity of 60,000 gallons of submerged loading of gasoline, kerosene or distillate oil per hour, installed in 1958, identified as Loading Rack, and exhausting to stack 65; controlled by the Loading Rack Flare, equipped with a 0.09 million British Thermal Units per hour (mmBtu/hr) natural gas fired pilot and designed to handle 160 actual cubic feet per minute (acfm) of hydrocarbon vapors, installed in 1998, and exhausting to stack 1D; Under 40 CFR 63, Subpart R, this facility is considered an existing bulk gasoline terminal.

(b) One (1) Fluid Catalytic Cracking Unit (FCCU) Raw Oil Pre-heater, identified as H-101 with a maximum heat input rate of 18.1 million British Thermal Units per hour (mmBtu/hr), combusting refinery fuel gas only (no sour water stripper overhead off-gas combustion), installed in 1945 and exhausting to stack 9;

(c) One (1) FCCU regenerator, identified as V-5 with an average throughput rate of 380 barrels fresh feed per hour, installed in 1950, controlled by a cyclone and exhausting to

stack 10; Under 40 CFR 63, Subpart UUU, process vents on the FCCU are considered affected sources at a petroleum refinery.

(d) The following storage vessels:

Tank ID	Tank Description	Max. Capacity (gallons)	Max. Withdrawal Rate (gal/hr)	Material Stored	Construction Date	NSPS and NESHAP applicability	Stack ID
1	fixed roof cone tank	404,418	168,000	hydrocarbon with vapor pressure no higher than the vapor pressure of jet naptha,	1940	-	075;
2	fixed roof cone tank	404,502	168,000	hydrocarbon with vapor pressure no higher than the vapor pressure of jet naptha,	1940	-	076;
3	fixed roof cone tank	404,334	168,000	hydrocarbon with vapor pressure no higher than the vapor pressure of jet naptha,	1940	-	077;
4	fixed roof cone tank	118,272	168,000	hydrocarbon with vapor pressure no higher than the vapor pressure of jet naptha,	1940	-	018;
5	fixed roof cone tank	120,456	168,000	hydrocarbon with vapor pressure no higher than the vapor pressure of jet naptha,	1940	-	019;
6	fixed roof cone tank	120,456	168,000	hydrocarbon with vapor pressure no higher than the vapor pressure of jet naptha,	1940	-	020;
7	fixed roof cone tank	126,000	168,000	hydrocarbon with vapor pressure no higher than the vapor pressure of jet naptha,	1940	-	078;
8	fixed roof cone tank	126,000	168,000	hydrocarbon with vapor pressure no higher than the vapor pressure of jet naptha,	1940	-	079;
9	fixed roof cone tank	204,204	168,000	hydrocarbon with vapor pressure no higher than the vapor pressure of jet naptha,	1940	-	023;
10	fixed roof cone tank	121,590	168,000	hydrocarbon with vapor pressure no higher than the vapor pressure of jet naptha,	1940	-	024;
11A	fixed roof cone tank	8,820	168,000	oil water / mixture	1972	-	080;
11B	fixed roof cone tank	8,820	168,000	oil water / mixture	1972	-	081;
12	fixed roof cone tank	6,090	168,000	hydrocarbon with vapor pressure no higher than the vapor pressure of jet naptha,	1988	40 CFR Part 60, Subpart Kb	082;

Tank ID	Tank Description	Max. Capacity (gallons)	Max. Withdrawal Rate (gal/hr)	Material Stored	Construction Date	NSPS and NESHAP applicability	Stack ID
15	fixed roof cone tank	24,654	168,000	hydrocarbon with vapor pressure no higher than the vapor pressure of jet naptha,	1941	-	083;
17	fixed roof cone tank	997,584	168,000	hydrocarbon with vapor pressure no higher than the vapor pressure of jet naptha,	1941	-	030;
18	internal floating roof tank,/mechanical primary seal	1,052,013	336,000	hydrocarbon with vapor pressure equal to or less than the vapor pressure of 13 RVP gasoline,	2003	40 CFR Part 60, Subpart Kb	037;
19	fixed roof cone tank/internal floating roof tank,/mechanical primary seal	616,938	336,000	hydrocarbon with vapor pressure equal to or less than the vapor pressure of 13 RVP gasoline,	1941	-	032;
21	fixed roof cone tank/internal floating roof tank,/mechanical primary seal	1,002,750	336,000	hydrocarbon with vapor pressure equal to or less than the vapor pressure of 13 RVP gasoline,	1941	-	034;
22A	fixed roof cone tank	1,050,000	84,000	hydrocarbon with vapor pressure of No. 2 fuel oil o less	2003	40 CFR 63, Subpart CC	120;
22B	fixed roof cone tank/insulated/heated cone tank	1,050,000	16,800	Residual Fuel Oil (No.6) or Petroleum Material with a vapor pressure equivalent to or less than No.2 distillate,	2006	-	127;
24	fixed roof cone tank/internal floating roof tank,/mechanical primary seal	588,714	336,000	hydrocarbon with vapor pressure equal to or less than the vapor pressure of 13 RVP gasoline,	1985	40 CFR Part 60, Subpart Kb	037;
25	fixed roof cone tank/internal floating roof tank,/mechanical primary seal	656,614	336,000	hydrocarbon with vapor pressure equal to or less than the vapor pressure of 13 RVP gasoline,	1941	-	038;
26	fixed roof cone tank/internal floating roof tank,/mechanical primary seal	1,006,068	336,000	hydrocarbon with vapor pressure equal to or less than the vapor pressure of 13 RVP gasoline,	1941	-	039;
33	fixed roof cone tank	2,262,960	168,000	hydrocarbon with vapor pressure no higher than the vapor pressure of jet naptha,	1946	-	085;

Tank ID	Tank Description	Max. Capacity (gallons)	Max. Withdrawal Rate (gal/hr)	Material Stored	Construction Date	NSPS and NESHAP applicability	Stack ID
34	fixed roof cone tank	984,480	168,000	hydrocarbon with vapor pressure no higher than the vapor pressure of jet naptha,	1946	-	045;
35	fixed roof cone tank/internal floating roof tank,/mechanical primary seal	997,962	336,000	hydrocarbon with vapor pressure equal to or less than the vapor pressure of Distillate,	1946	-	046;
36	fixed roof cone tank/internal floating roof tank,/mechanical primary seal	2,261,954	336,000	hydrocarbon with vapor pressure equal to or less than the vapor pressure of jet kerosene,	1946	-	047;
37	fixed roof cone tank	2,247,126	210,000	hydrocarbon with vapor pressure no higher than the vapor pressure of jet naptha,	1946	-	048;
38	fixed roof cone tank	2,248,386	210,000	hydrocarbon with vapor pressure no higher than the vapor pressure of jet naptha,	1948	-	049;;
39	fixed roof cone tank	2,250,234	168,000	hydrocarbon with vapor pressure no higher than the vapor pressure of jet naptha,	1948	-	050;
40	fixed roof cone tank/internal floating roof tank,/mechanical primary seal	2,222,388	336,000	RVP 15 Gasoline,	1949	-	051;
41	fixed roof cone tank/internal floating roof tank,/mechanical primary seal	2,204,244	336,000	hydrocarbon with vapor pressure equal to or less than the vapor pressure of 13 RVP gasoline,	1949	-	052;
42	fixed roof cone tank	2,261,574	168,000	hydrocarbon with vapor pressure no higher than the vapor pressure of jet naptha,	1950	-	053;
43	fixed roof cone tank	2,254,098	168,000	hydrocarbon with vapor pressure no higher than the vapor pressure of jet naptha,	1951	-	054;
44	fixed roof cone tank/internal floating roof tank,/mechanical primary seal	2,310,000	336,000	hydrocarbon with vapor pressure equal to or less than the vapor pressure of 13 RVP gasoline,	1951	-	055;

Tank ID	Tank Description	Max. Capacity (gallons)	Max. Withdrawal Rate (gal/hr)	Material Stored	Construction Date	NSPS and NESHAP applicability	Stack ID
45	fixed roof cone tank/internal floating roof tank,/mechanical primary seal	2,310,000	336,000	hydrocarbon with vapor pressure equal to or less than the vapor pressure of 13 RVP gasoline,	1951	-	056;
46	fixed roof cone tank/mechanical primary seal	3,402,000	168,000	hydrocarbon with vapor pressure equal to or less than the vapor pressure of Distillate,	1955	-	057;
47	fixed roof cone tank/internal floating roof tank,/mechanical primary seal	5,040,000	336,000	hydrocarbon with vapor pressure equal to or less than the vapor pressure of 13 RVP gasoline,	1976	40 CFR Part 60, Subpart K	058;
48	fixed roof cone tank/external floating roof tank /mechanical primary seal	4,032,000	336,000	hydrocarbon with vapor pressure equal to or less than the vapor pressure of 13 RVP gasoline,	1958	-	059;
49	fixed roof cone tank/ external floating roof tank /mechanical primary seal	4,032,000	336,000	hydrocarbon with vapor pressure equal to or less than the vapor pressure of 13 RVP gasoline,	1958	-	060;
50	fixed roof cone tank/internal floating roof tank,/mechanical primary seal	3,934,266	336,000	hydrocarbon with vapor pressure equal to or less than the vapor pressure of 13 RVP gasoline,	1965	-	061;
51	fixed roof cone tank/internal floating roof tank,/mechanical primary seal	3,937,266	336,000	hydrocarbon with vapor pressure equal to or less than the vapor pressure of 13 RVP gasoline,	1973	-	062;
52	fixed roof cone tank	3,935,148	336,000	hydrocarbon with vapor pressure no higher than the vapor pressure of jet naptha,	1976	40 CFR Part 60, Subpart K	063;
53	fixed roof cone tank	16,926	168,000	Ethanol,	1985	40 CFR Part 60, Subpart Kb	086;
54	fixed roof cone tank	16,926	168,000	Ethanol,	1985	40 CFR Part 60, Subpart Kb	087;
55	fixed roof cone tank	11,634	168,000	Ethanol,	1980	-	088;
56	fixed roof cone tank	11,634	168,000	Ethanol,	1980	-	089;

Tank ID	Tank Description	Max. Capacity (gallons)	Max. Withdrawal Rate (gal/hr)	Material Stored	Construction Date	NSPS and NESHAP applicability	Stack ID
58	fixed roof cone tank	16,800	168,000	hydrocarbon with vapor pressure equal to or less than the vapor pressure of 13 RVP gasoline,	1980	-	102;
159	fixed roof cone tank	16,800	168,000	hydrocarbon with vapor pressure no higher than the vapor pressure of jet naptha,	1988	40 CFR Part 60, Subpart Kb	103;
160	fixed roof cone tank	16,800	168,000	hydrocarbon with vapor pressure no higher than the vapor pressure of jet naptha,	1994	40 CFR Part 60, Subpart Kb	104;
161	fixed roof cone tank	16,800	168,000	hydrocarbon with vapor pressure no higher than the vapor pressure of jet naptha,	1994	40 CFR Part 60, Subpart Kb	105;
162	fixed roof cone tank	16,800	168,000	hydrocarbon with vapor pressure no higher than the vapor pressure of jet naptha,	1994	40 CFR Part 60, Subpart Kb	106;
163	fixed roof cone tank	16,800	168,000	hydrocarbon with vapor pressure no higher than the vapor pressure of jet naptha,	1983	-	107;
164	fixed roof cone tank	16,800	168,000	hydrocarbon with vapor pressure no higher than the vapor pressure of jet naptha,	1983	-	108;
165	fixed roof cone tank	16,800	168,000	hydrocarbon with vapor pressure no higher than the vapor pressure of jet naptha,	1985	40 CFR Part 60, Subpart Kb	109;
166	fixed roof cone tank	16,800	168,000	hydrocarbon with vapor pressure no higher than the vapor pressure of jet naptha,	1985	40 CFR Part 60, Subpart Kb	110;
167	fixed roof cone tank	16,800	168,000	hydrocarbon with vapor pressure no higher than the vapor pressure of jet naptha,	1985	40 CFR Part 60, Subpart Kb	111;
168	fixed roof cone tank	16,800	168,000	hydrocarbon with vapor pressure no higher than the vapor pressure of jet naptha,	1988	40 CFR Part 60, Subpart Kb	112;
169	fixed roof cone tank	16,800	168,000	hydrocarbon with vapor pressure equal to or less than the vapor pressure of 13 RVP gasoline,	1989	40 CFR Part 60, Subpart Kb	113;
125	fixed roof cone tank	157,000	6,000	hydrocarbon with vapor pressure of No.2 fuel oil or less	2005	-	015;

Tank ID	Tank Description	Max. Capacity (gallons)	Max. Withdrawal Rate (gal/hr)	Material Stored	Construction Date	NSPS and NESHAP applicability	Stack ID
173	fixed roof cone tank/insulated/ heated cone tank	1,050,000	16,800	Residual Fuel Oil (No.6) or Petroleum Material with a vapor pressure equivalent to or less than No.2 distillate,	2006	-	128;
174	Fixed roof cone tank/insulated/ heated cone tank	1,050,000	16,800	Residual Fuel Oil (No.6) or Petroleum Material with a vapor pressure equivalent to or less than No.2 distillate,	2007	-	129

(e) One (1) Main Refinery Flare, identified as RCD-1 with a maximum heat input rate of 371 mmBtu/hr of refinery fuel gas/process gas (with capacity for a supplementary pilot fuel heat input rate of 3.0 mmBtu/hr), installed in 1945 and replaced in 2006 and exhausting to stack 118;

Under 40 CFR Part 60, Subpart Ja (currently under stay) the Main Refinery Flare is considered an affected facility.

(f) One (1) Crude heater equipped with a Low-NOx burner, identified as C-II with a maximum heat input rate of 131 mmBtu/hr, combusting refinery fuel gas and No. 6 residual fuel oil, installed in 1955 and exhausting to stack 1;

(g) One (1) Unifiner heater, identified as H-H5 with a maximum heat input rate of 20 mmBtu/hr, combusting refinery fuel gas, installed in 1959 and exhausting to stack 2;

(h) One (1) Cycle oil heater, identified as H-H2 with a maximum heat input rate of 10 mmBtu/hr, combusting refinery fuel gas, installed in 1956 and exhausting to stack 3;

(i) One (1) Naphtha splitter heater, identified as H-H3 with a maximum heat input rate of 12.2 mmBtu/hr, combusting refinery fuel gas, installed in 1956 and exhausting to stack 4;

(j) One (1) Vacuum heater, identified as V-IV with a maximum heat input rate of 14.1 mmBtu/hr, combusting refinery fuel gas and No. 6 residual fuel oil, installed in 1950, approved to be modified in 2007, and exhausting to stack 5;

(k) One (1) Old Platformer heater, identified as P-H1 with a maximum heat input rate of 29 mmBtu/hr, combusting refinery fuel gas, installed in 1956 and exhausting to stack 6;

(l) One (1) Alkylation unit heater, identified as A-H1 with a maximum heat input rate of 13.2 mmBtu/hr, combusting refinery fuel gas and No. 6 residual fuel oil, installed in 1966 and exhausting to stack 7;

(m) One (1) Auxiliary crude heater, identified as C-I with a maximum heat input rate of 10.1 mmBtu/hr, combusting refinery fuel gas, installed in 1966 and exhausting to stack 11;

(n) One (1) Platformer stabilizer reb, identified as P-H2 with a maximum heat input rate of 5.92 mmBtu/hr, combusting refinery fuel gas, installed in 1956 and exhausting to stack 12;

(o) One (1) no. 1 boiler, with a maximum heat input rate of 52 mmBtu/hr of process gas and/or No. 6 residual oil, identified as B1 and exhausting to stack 8;

(p) One (1) no. 2 boiler, with a maximum heat input rate of 65 mmBtu/hr of residual oil and/or process gas, identified as B2 and exhausting to stack 13;

(q) One (1) no. 3 boiler, with a maximum heat input rate of 52 mmBtu/hr of residual oil and/or process gas, identified as B3 and exhausting to stack 14;

(r) One (1) Vacuum heater husky, identified as VIII with a maximum heat input rate of 6.27 mmBtu/hr, combusting refinery fuel gas No. 6 residual fuel oil,, installed in 1963 and exhausting to stack 64;

(s) One (1) CCR Platformer Unit which includes one (1) CCR Platformer Heater, identified as 300 - H1, H2, H3 with a maximum heat input rate of 70.3 mmBtu/hr, combusting refinery fuel gas, installed in 1992 and exhausting to stack 74; Under 40 CFR 63, Subpart UUU, process vents on the CCR are considered affected sources at a petroleum refinery.

(t) Two (2) sets of Oil/water Separators equipped with covers for VOC control, identified as 071; Under 40 CFR 60, Subpart QQQ, new and existing drains are considered affected sources at a petroleum refinery.

(u) one (1) Miscellaneous operation (Sampling, Blowing, Purging, etc.), identified as 073;

(v) Pipeline Valves - Gas, identified as 090; Under 40 CFR 60, Subpart GGG, valves are considered affected sources at a petroleum refinery.

(w) Pipeline Valves - Light Liquid, identified as 091; Under 40 CFR 60, Subpart GGG, valves are considered affected sources at a petroleum refinery.

(x) Pipeline Valves - Heavy Liquid, identified as 092; Under 40 CFR 60, Subpart GGG, valves are considered affected sources at a petroleum refinery.

(y) Pipeline Valves - Hydrogen, identified as 093; Under 40 CFR 60, Subpart GGG, valves are considered affected sources at a petroleum refinery.

(z) Open Ended Valves, identified as 094; Under 40 CFR 60, Subpart GGG, open-ended valves are considered affected sources at a petroleum refinery.

(aa) Flanges, identified as 095; Under 40 CFR 60, Subpart GGG, the flanges are affected considered sources at a petroleum refinery.

(bb) Pump Seals Light Liquid, identified as 096; Under 40 CFR 60, Subpart GGG, equipment associated with the pump is considered an affected source at a petroleum refinery.

(cc) Pump Seals Heavy Liquid, identified as 097; Under 40 CFR 60, Subpart GGG, equipment associated with the pump is considered an affected source at a petroleum refinery.

(dd) Compressor Seals - Gas, identified as 098; Under 40 CFR 60, Subpart GGG, equipment associated with compressor is considered an affected source at a petroleum refinery.

(ee) Compressor Seals - Heavy Liquid, identified as 099; Under 40 CFR 60, Subpart GGG, equipment associated with compressor is considered an affected source at a petroleum refinery.

(ff) Drains, identified as 100.

(gg) Vessel Relief Valves, identified as 101; Under 40 CFR 60, Subpart GGG, pressure relief devices are considered affected sources at a petroleum refinery.

(hh) Cooling Towers, identified as 119; and

(ii) Process units made up of vessels, piping, exchangers, identified as PENEX. Under 40 CFR 60, Subpart GGG, equipment associated with the sampling connection system is considered an affected source at a petroleum refinery.

(jj) One (1) Hydrotreating Unit Reactor charge heater (210-H-100), identified as 122, with a maximum heat input rating of 19.25 MMBtu per hour, combusting refinery fuel gas as a

primary fuel and natural gas as a back up fuel, and exhausting through one (1) stack identified as 122 (to be constructed in 2005).

(kk) One (1) Hydrotreating Unit Reboiler Stabilizer (210-H-101), identified as 123, with a maximum heat input rating of 19.94 MMBtu per hour, combusting refinery fuel gas as a primary fuel and natural gas as a back up fuel, and exhausting through one (1) stack identified as 123 (to be constructed in 2005).

(ll) One (1) Tail Gas Treatment System and Sulfur Recovery System identified as 124 and consisting of the following: Under 40 CFR 63, Subpart UUU, these facilities and the associated process vents and bypass lines are considered affected sources at a petroleum refinery.

(1) One (1) Claus Unit Startup burner (520-H-101), identified as 124-1, with a maximum heat input rating of 1.54 MMBtu per hour, combusting natural gas, and exhausting through one (1) stack identified as 124-1 (to be constructed in 2005).

(2) One (1) Tail Gas Treating Unit (TGTU) Incinerator burner (520-H-101), identified as 124-2, with a maximum heat input rating of 1.29 MMBtu per hour, combusting refinery fuel gas as a primary fuel and natural as a back fuel, and exhausting through one (1) stack identified as 124-2 (to be constructed in 2005). In the event of unscheduled shutdown of the CCR unit, the Sulfur Recovery Unit effluent will be routed directly to the TGTU incinerator.

(3) One (1) Tail Gas Treating Unit (TGTU) Incinerator (520-H-162), identified as 124-3, with a maximum process flow rate of 48,000 dry standard cubic feet per day, and exhausting through one (1) stack identified as 124-3 (to be constructed in 2005).

(4) One (1) Sour Flare (520-H-163), identified as 124-4, with a maximum burner capacity of 0.92 MMBtu per hour, and a maximum process flow rate of 200 standard cubic feet per hour, and exhausting through one (1) stack identified as 124-4 (to be constructed in 2005).

(mm) Fugitive emissions from the Hydrotreater unit, Amine Unit, Sulfur Recovery Unit, Tail Gas Treatment Unit consisting of: Under 40 CFR 60, Subpart GGG, equipment associated with the sampling connection system is considered an affected source at a petroleum refinery. Under 40 CFR 63, Subpart CC, equipment leaks from storage vessels and equipment leaks associated with a bulk gasoline terminal are considered affected sources.

(1) pipeline Valves - Gas, identified as 090;
(2) pipeline Valves - Light Liquid, identified as 091;
(3) pipeline Valves - Heavy Liquid, identified as 092;
(4) pipeline Valves - Hydrogen, identified as 093;
(5) open Ended Valves, identified as 094;
(6) Miscellaneous (Sampling, Blowing, Purging, etc.), identified as 073;
(7) flanges, identified as 095;
(8) pump Seals Light Liquid, identified as 096;
(9) pump Seals Heavy Liquid, identified as 097;
(10) compressor Seals - Gas, identified as 098;
(11) compressor Seals - Heavy Liquid, identified as 099;
(12) drains, identified as 100;
(13) vessel Relief Valves, identified as 101; and
(14) cooling Towers, identified as 119.

(nn) One (1) Vacuum heater, identified as 200-H6, with a maximum heat input rate of 5.49 mmBtu/hr, combusting refinery fuel gas and natural gas as a backup, installed in 2005 and exhausting to stack 126.

(oo) One (1) no. 4 boiler, constructed in 2006, with a maximum heat input rate of 84.9 MMBtu/hr of process gas and/or No. 6 residual oil and/or natural gas, identified as B4 and exhausting to stack 131.

Under the Standards of Performance for Small Industrial-Commercial-Institutional Steam Generating Units NSPS (40 CFR 60, Subpart Dc), the boiler B4, is considered a new source.

Under the Standards of Performance for Petroleum Refineries [40 CFR Part 60, Subpart J], the boiler B4, is considered a new source.

(pp) One (1) fixed roof, cone tank, internal floating roof, identified as Tank No. 175, with a capacity of 2,310,000 gallons and a maximum withdrawal rate of 210,000 gallons per hour of petroleum with vapor pressure of 13 RVP gasoline or less and exhausting to stack 130 (start construction in second quarter of 2007 and to be completed by February 2008);

Under the Standards of Performance for Volatile Organic Liquid Storage Vessels (Including Petroleum Liquid Storage Vessels) for Which Construction, Reconstruction, or Modification Commenced After July 23, 1984 [40 CFR Part 60, Subpart Kb], the Tank No. 175, is considered a new source.

(qq) One (1) Low Sulfur Gasoline (LSG) Unit consisting of the following equipment:

(1) LSG Reactor Charge Heater (810-H101) approved for construction in 2008, with a maximum capacity of 5.985 MMBtu, combusting refinery fuel gas only, and venting to stack 128.

Under 40 CFR Part 60, Subpart Ja (currently under stay) the LSG Reactor Charge Heater is considered an affected facility.

(2) #5 Cooling Tower with a maximum capacity of 3,600 gpm approved for construction in 2008.

(3) LSG Unit components and drains (800 valves, 16 drains, and 5 pumps) approved for construction in 2008.

Under 40 CFR 63, Subpart CC, equipment leaks associated with a petroleum refinery are considered as an affected facility.

Under 40 CFR 60, Subpart QQQ, new and existing drains are considered affected facilities at a petroleum refinery.

Under 40 CFR 60, Subpart GGGa, valves are considered affected facilities at a petroleum refinery.

Under 40 CFR 61, Subpart FF new and existing drains are considered affected facilities for benzene waste operations.

A.4 Specifically Regulated Insignificant Activities [326 IAC 2-7-1(21)] [326 IAC 2-7-4(c)] [326 IAC 2-7-5(15)]

This stationary source also includes the following insignificant activities which are specifically regulated, as defined in 326 IAC 2-7-1(21):

(a) Metal and related material cutting, fabricating and preparation. [326 IAC 6-3]

(b) Sand blasting or mechanical stripping on tanks and other equipment. [326 IAC 6-3]

(c) Painting on tanks and other equipment. [326 IAC 6-3]

(d) Welding/Cutting of metal for vessel, pipeline and equipment maintenance. [326 IAC 6-3]

A.5 Part 70 Permit Applicability [326 IAC 2-7-2]

This stationary source is required to have a Part 70 permit by 326 IAC 2-7-2 (Applicability) because:

(a) It is a major source, as defined in 326 IAC 2-7-1(22);

(b) It is a source in a source category designated by the United States Environmental Protection Agency (U.S. EPA) under 40 CFR 70.3 (Part 70 - Applicability).

SECTION B GENERAL CONDITIONS

B.1 Definitions [326 IAC 2-7-1]

Terms in this permit shall have the definition assigned to such terms in the referenced regulation. In the absence of definitions in the referenced regulation, the applicable definitions found in the statutes or regulations (IC 13-11, 326 IAC 1-2 and 326 IAC 2-7) shall prevail.

B.2 Permit Term [326 IAC 2-7-5(2)] [326 IAC 2-1.1-9.5] [326 IAC 2-7-4(a)(1)(D)] [IC 13-15-3-6(a)]

(a) This permit, 129-7882-00003, is issued for a fixed term of five (5) years from the issuance date of this permit, as determined in accordance with IC 4-21.5-3-5(f) and IC 13-15-5-3. Subsequent revisions, modifications, or amendments of this permit do not affect the expiration date of this permit.

(b) If IDEM, OAQ, upon receiving a timely and complete renewal permit application, fails to issue or deny the permit renewal prior to the expiration date of this permit, this existing permit shall not expire and all terms and conditions shall continue in effect, including any permit shield provided in 326 IAC 2-7-15, until the renewal permit has been issued or denied.

B.3 Term of Conditions [326 IAC 2-1.1-9.5]

Notwithstanding the permit term of a permit to construct, a permit to operate, or a permit modification, any condition established in a permit issued pursuant to a permitting program approved in the state implementation plan shall remain in effect until:

(a) the condition is modified in a subsequent permit action pursuant to Title I of the Clean Air Act; or

(b) the emission unit to which the condition pertains permanently ceases operation.

B.4 Enforceability [326 IAC 2-7-7]

Unless otherwise stated, all terms and conditions in this permit, including any provisions designed to limit the source's potential to emit, are enforceable by IDEM, the United States Environmental Protection Agency (U.S. EPA) and by citizens in accordance with the Clean Air Act.

B.5 Severability [326 IAC 2-7-5(5)]

The provisions of this permit are severable; a determination that any portion of this permit is invalid shall not affect the validity of the remainder of the permit.

B.6 Property Rights or Exclusive Privilege [326 IAC 2-7-5(6)(D)]

This permit does not convey any property rights of any sort or any exclusive privilege.

B.7 Duty to Provide Information [326 IAC 2-7-5(6)(E)]

(a) The Permittee shall furnish to IDEM, OAQ, within a reasonable time, any information that IDEM, OAQ, may request in writing to determine whether cause exists for modifying, revoking and reissuing, or terminating this permit, or to determine compliance with this permit. The submittal by the Permittee does require the certification by the "responsible official" as defined by 326 IAC 2-7-1(34). Upon request, the Permittee shall also furnish to IDEM, OAQ, copies of records required to be kept by this permit.

(b) For information furnished by the Permittee to IDEM, OAQ, the Permittee may include a claim of confidentiality in accordance with 326 IAC 17.1. When furnishing copies of requested records directly to U. S. EPA, the Permittee may assert a claim of confidentiality in accordance with 40 CFR 2, Subpart B.

B.8 Certification [326 IAC 2-7-4(f)] [326 IAC 2-7-6(1)] [326 IAC 2-7-5(3)(C)]

(a) Where specifically designated by this permit or required by an applicable requirement, any application form, report, or compliance certification submitted shall contain certification by the "responsible official" of truth, accuracy, and completeness. This certification shall

state that, based on information and belief formed after reasonable inquiry, the statements and information in the document are true, accurate, and complete.

(b) One (1) certification shall be included, using the attached Certification Form, with each submittal requiring certification. One (1) certification may cover multiple forms in one (1) submittal.

(c) The "responsible official" is defined at 326 IAC 2-7-1(34).

B.9 Annual Compliance Certification [326 IAC 2-7-6(5)]

(a) The Permittee shall annually submit a compliance certification report which addresses the status of the source's compliance with the terms and conditions contained in this permit, including emission limitations, standards, or work practices. The initial certification shall cover the time period from the date of final permit issuance through December 31 of the same year. All subsequent certifications shall cover the time period from January 1 to December 31 of the previous year, and shall be submitted no later than July 1 of each year to:

Indiana Department of Environmental Management
Compliance Branch, Office of Air Quality
100 North Senate Avenue
MC 61-53 IGCN 1003
Indianapolis, Indiana 46204-2251

and

United States Environmental Protection Agency, Region V
Air and Radiation Division, Air Enforcement Branch - Indiana (AE-17J)
77 West Jackson Boulevard
Chicago, Illinois 60604-3590

(b) The annual compliance certification report required by this permit shall be considered timely if the date postmarked on the envelope or certified mail receipt, or affixed by the shipper on the private shipping receipt, is on or before the date it is due. If the document is submitted by any other means, it shall be considered timely if received by IDEM, OAQ, on or before the date it is due.

(c) The annual compliance certification report shall include the following:

(1) The appropriate identification of each term or condition of this permit that is the basis of the certification;

(2) The compliance status;

(3) Whether compliance was continuous or intermittent;

(4) The methods used for determining the compliance status of the source, currently and over the reporting period consistent with 326 IAC 2-7-5(3); and

(5) Such other facts, as specified in Sections D of this permit, as IDEM, OAQ, may require to determine the compliance status of the source.

The submittal by the Permittee does require the certification by the "responsible official" as defined by 326 IAC 2-7-1(34).

B.10 Preventive Maintenance Plan [326 IAC 2-7-5(1),(3) and (13)] [326 IAC 2-7-6(1) and (6)] [326 IAC 1-6-3]

(a) If required by specific condition(s) in Section D of this permit, the Permittee shall prepare and maintain Preventive Maintenance Plans (PMPs) within ninety (90) days after issuance of this permit, including the following information on each facility:

(1) Identification of the individual(s) responsible for inspecting, maintaining, and repairing emission control devices;

(2) A description of the items or conditions that will be inspected and the inspection schedule for said items or conditions; and

(3) Identification and quantification of the replacement parts that will be maintained in inventory for quick replacement.

If, due to circumstances beyond the Permittee's control, the PMPs cannot be prepared and maintained within the above time frame, the Permittee may extend the date an additional ninety (90) days provided the Permittee notifies:

Indiana Department of Environmental Management
Compliance Branch, Office of Air Quality
100 North Senate Avenue
MC 61-53 IGCN 1003
Indianapolis, Indiana 46204-2251

The PMP extension notification does not require the certification by the "responsible official" as defined by 326 IAC 2-7-1(34).

(b) A copy of the PMPs shall be submitted to IDEM, OAQ upon request and within a reasonable time, and shall be subject to review and approval by IDEM, OAQ. IDEM, OAQ may require the Permittee to revise its PMPs whenever lack of proper maintenance causes or is the primary contributor to an exceedance of any limitation on emissions or potential to emit. The PMPs do not require the certification by the "responsible official" as defined by 326 IAC 2-7-1(34).

(c) To the extent the Permittee is required by 40 CFR Part 60/63 to have an Operation Maintenance, and Monitoring (OMM) Plan for a unit, such Plan is deemed to satisfy the PMP requirements of 326 IAC 1-6-3 for that unit.

B.11 Emergency Provisions [326 IAC 2-7-16]

(a) An emergency, as defined in 326 IAC 2-7-1(12), is not an affirmative defense for an action brought for noncompliance with a federal or state health-based emission limitation .

(b) An emergency, as defined in 326 IAC 2-7-1(12), constitutes an affirmative defense to an action brought for noncompliance with a technology-based emission limitation if the affirmative defense of an emergency is demonstrated through properly signed, contemporaneous operating logs or other relevant evidence that describe the following:

(1) An emergency occurred and the Permittee can, to the extent possible, identify the causes of the emergency;

(2) The permitted facility was at the time being properly operated;

(3) During the period of an emergency, the Permittee took all reasonable steps to minimize levels of emissions that exceeded the emission standards or other requirements in this permit;

(4) For each emergency lasting one (1) hour or more, the Permittee notified IDEM, OAQ, within four (4) daytime business hours after the beginning of the

emergency, or after the emergency was discovered or reasonably should have been discovered;

Telephone Number: 1-800-451-6027 (ask for Office of Air Quality, Compliance Section), or
Telephone Number: 317-233-0178 (ask for Compliance Section)
Facsimile Number: 317-233-6865

(5) For each emergency lasting one (1) hour or more, the Permittee submitted the attached Emergency Occurrence Report Form or its equivalent, either by mail or facsimile to:

Indiana Department of Environmental Management
Compliance Branch, Office of Air Quality
100 North Senate Avenue
MC 61-53 IGCN 1003
Indianapolis, Indiana 46204-2251

within two (2) working days of the time when emission limitations were exceeded due to the emergency.

The notice fulfills the requirement of 326 IAC 2-7-5(3)(C)(ii) and must contain the following:

(A) A description of the emergency;

(B) Any steps taken to mitigate the emissions; and

(C) Corrective actions taken.

The notification which shall be submitted by the Permittee does not require the certification by the "responsible official" as defined by 326 IAC 2-7-1(34).

(6) The Permittee immediately took all reasonable steps to correct the emergency.

(c) In any enforcement proceeding, the Permittee seeking to establish the occurrence of an emergency has the burden of proof.

(d) This emergency provision supersedes 326 IAC 1-6 (Malfunctions). This permit condition is in addition to any emergency or upset provision contained in any applicable requirement.

(e) The Permittee seeking to establish the occurrence of an emergency shall make records available upon request to ensure that failure to implement a PMP did not cause or contribute to an exceedance of any limitations on emissions. However, IDEM, OAQ may require that the Preventive Maintenance Plans required under 326 IAC 2-7-4(c)(9) be revised in response to an emergency.

(f) Failure to notify IDEM, OAQ by telephone or facsimile of an emergency lasting more than one (1) hour in accordance with (b)(4) and (5) of this condition shall constitute a violation of 326 IAC 2-7 and any other applicable rules.

(g) If the emergency situation causes a deviation from a technology-based limit, the Permittee may continue to operate the affected emitting facilities during the emergency provided the Permittee immediately takes all reasonable steps to correct the emergency and minimize emissions.

(h) The Permittee shall include all emergencies in the Quarterly Deviation and Compliance Monitoring Report.

B.12 Permit Shield [326 IAC 2-7-15] [326 IAC 2-7-20] [326 IAC 2-7-12]

(a) Pursuant to 326 IAC 2-7-15, the Permittee has been granted a permit shield. The permit shield provides that compliance with the conditions of this permit shall be deemed compliance with any applicable requirements as of the date of permit issuance, provided that either the applicable requirements are included and specifically identified in this permit or the permit contains an explicit determination or concise summary of a determination that other specifically identified requirements are not applicable. The Indiana statutes from IC 13 and rules from 326 IAC, referenced in conditions in this permit, are those applicable at the time the permit was issued. The issuance or possession of this permit shall not alone constitute a defense against an alleged violation of any law, regulation or standard, except for the requirement to obtain a Part 70 permit under 326 IAC 2-7 or for applicable requirements for which a permit shield has been granted.

This permit shield does not extend to applicable requirements which are promulgated after the date of issuance of this permit unless this permit has been modified to reflect such new requirements.

(b) In addition to the nonapplicability determinations set forth in Sections D of this permit, the IDEM, OAQ has made the following determination regarding this source:

Federal Rule Applicability (Plant 1)

(1) The combustion in a flare of process upset gases or fuel gas that is released to the flare as a result of relief valve leakage or other emergency malfunctions is exempt from 40 CFR 60.104 paragraph (a)(1).

(2) The following are exempt from the requirements of 40 CFR 60.113:
(A) Each Permittee of each affected facility which stores petroleum liquids with a Reid vapor pressure of less than 6.9 kPa (1.0 psia) provided the maximum true vapor pressure does not exceed 6.9 kPa (1.0 psia).

(B) Each Permittee of each affected facility equipped with a vapor recovery and return or disposal system in accordance with the requirements of 40 CFR 60.112.

(3) This source is not subject to the requirements of the National Emission Standards for Hazardous Air Pollutants 326 IAC 20.17, (40 CFR 63.560, Subpart Y) because there are no marine tank vessel loading operations at plant 1.

(4) Compressors in hydrogen service are exempt from the requirements of 40 CFR 60.592 if a Permittee demonstrates that a compressor is in hydrogen service.

(5) Any existing reciprocating compressor that becomes an affected facility under provisions of 40 CFR 60.14 or 40 CFR 60.15 is exempt from 40 CFR 60.482(a), (b), (c), (d), (e), and (h).

(6) Storage vessels that are to comply with 40 CFR 60.112b(a)(2) of Subpart Kb are exempt from the secondary seal requirements of 40 CFR 60.112b(a)(2)(I)(B) during the gap measurements for the primary seal required by 40 CFR 60.113b(b) of Subpart Kb.

State Rule Applicability Individual Facilities (Plant 1)

(7) 326 IAC 8-4-3 (Petroleum Liquid Storage Facilities): All storage tanks at the source are not subject to this rule, except for Tank Nos. 18 and 24.

(8) 326 IAC 8-4-5 (Bulk Gasoline Plants): This source is not subject to the requirements of 326 IAC 8-4-5 (Bulk Gasoline Plants), because it is not located in any of the listed counties.

(9) 326 IAC 8-4-6 (Gasoline Dispensing Facilities): The Truck Loading Rack is not subject to this rule because the Truck Loading Rack does not dispense gasoline into motor vehicle fuel tanks or portable containers, is not a gasoline dispensing facility, and is not located in any of the listed counties.

(10) 326 IAC 8-4-7 (Gasoline Transports): Plant 1 is not subject to the requirements of 326 IAC 8-4-7 (Gasoline Transports), because it is not an owner or operator of a gasoline transport, and is not located in any of the listed counties.

(11) 326 IAC 8-4-9 (Leaks from Transports and Vapor Collection Systems; Records): Plant 1 is not subject to this rule because it is not subject to the requirements of 326 IAC 8-4-4 through 326 IAC 8-4-6 and also not subject to the requirements of 326 IAC 8-4-9 (Leaks from Transports and Vapor Collection Systems, Records).

(12) 326 IAC 8-7 (Specific VOC Reduction Requirements for Lake, Porter, Clark and Floyd Counties): Plant 1 is not subject to the requirements of 326 IAC 8-7 (Specific VOC Reduction Requirements for Lake, Porter, Clark and Floyd Counties), because the source is not located in one of the listed counties.

(13) 326 IAC 8-9 (Volatile Organic Liquid Storage Vessels): Plant 1 is not subject to the requirements of 326 IAC 8-9 (Volatile Organic Liquid Storage Vessels) because this source is not located in one of the listed counties.

(c) If, after issuance of this permit, it is determined that the permit is in nonconformance with an applicable requirement that applied to the source on the date of permit issuance, IDEM, OAQ, shall immediately take steps to reopen and revise this permit and issue a compliance order to the Permittee to ensure expeditious compliance with the applicable requirement until the permit is reissued. The permit shield shall continue in effect so long as the Permittee is in compliance with the compliance order.

(d) No permit shield shall apply to any permit term or condition that is determined after issuance of this permit to have been based on erroneous information supplied in the permit application. Erroneous information means information that the Permittee knew to be false, or in the exercise of reasonable care should have been known to be false, at the time the information was submitted.

(e) Nothing in 326 IAC 2-7-15 or in this permit shall alter or affect the following:

(1) The provisions of Section 303 of the Clean Air Act (emergency orders), including the authority of the U.S. EPA under Section 303 of the Clean Air Act;

(2) The liability of the Permittee for any violation of applicable requirements prior to or at the time of this permit's issuance;

(3) The applicable requirements of the acid rain program, consistent with Section 408(a) of the Clean Air Act; and

(4) The ability of U.S. EPA to obtain information from the Permittee under Section 114 of the Clean Air Act.

(f) This permit shield is not applicable to any change made under 326 IAC 2-7-20(b)(2) (Sections 502(b)(10) of the Clean Air Act changes) and 326 IAC 2-7-20(c)(2) (trading based on State Implementation Plan (SIP) provisions).

(g) This permit shield is not applicable to modifications eligible for group processing until after IDEM, OAQ, has issued the modifications. [326 IAC 2-7-12(c)(7)]

(h) This permit shield is not applicable to minor Part 70 permit modifications until after IDEM, OAQ, has issued the modification. [326 IAC 2-7-12(b)(8)]

B.13 Prior Permits Superseded [326 IAC 2-1.1-9.5] [326 IAC 2-7-10.5]

(a) All terms and conditions of permits established prior to T129-7882-00003 and issued pursuant to permitting programs approved into the state implementation plan have been either:

(1) incorporated as originally stated,

(2) revised under 326 IAC 2-7-10.5, or

(3) deleted under 326 IAC 2-7-10.5.

(b) Provided that all terms and conditions are accurately reflected in this combined permit, all previous registrations and permits are superseded by this combined new source review and part 70 operating permit.

B.14 Termination of Right to Operate [326 IAC 2-7-10] [326 IAC 2-7-4(a)]

The Permittee's right to operate this source terminates with the expiration of this permit unless a timely and complete renewal application is submitted at least nine (9) months prior to the date of expiration of the source's existing permit, consistent with 326 IAC 2-7-3 and 326 IAC 2-7-4(a).

B.15 Deviations from Permit Requirements and Conditions [326 IAC 2-7-5(3)(C)(ii)]

(a) Deviations from any permit requirements (for emergencies see Section B - Emergency Provisions), the probable cause of such deviations, and any response steps or preventive measures taken shall be reported to:

Indiana Department of Environmental Management
Compliance Data Section, Office of Air Quality
100 North Senate Avenue
MC 61-53 IGCN 1003
Indianapolis, Indiana 46204-2251

using the attached Quarterly Deviation and Compliance Monitoring Report, or its equivalent. A deviation required to be reported pursuant to an applicable requirement that exists independent of this permit, shall be reported according to the schedule stated in the applicable requirement and does not need to be included in this report.

The Quarterly Deviation and Compliance Monitoring Report does require the certification by the "responsible official" as defined by 326 IAC 2-7-1(34).

(b) A deviation is an exceedance of a permit limitation or a failure to comply with a requirement of the permit.

B.16 Permit Modification, Reopening, Revocation and Reissuance, or Termination [326 IAC 2-7-5(6)(C)] [326 IAC 2-7-8(a)] [326 IAC 2-7-9]

(a) This permit may be modified, reopened, revoked and reissued, or terminated for cause. The filing of a request by the Permittee for a Part 70 Operating Permit modification, revocation and reissuance, or termination, or of a notification of planned changes or anticipated noncompliance does not stay any condition of this permit. [326 IAC 2-7-5(6)(C)] The notification by the Permittee does require the certification by the "responsible official" as defined by 326 IAC 2-7-1(34).

(b) This permit shall be reopened and revised under any of the circumstances listed in IC 13-15-7-2 or if IDEM, OAQ, determines any of the following:

(1) That this permit contains a material mistake.

(2) That inaccurate statements were made in establishing the emissions standards or other terms or conditions.

(3) That this permit must be revised or revoked to assure compliance with an applicable requirement. [326 IAC 2-7-9(a)(3)]

(c) Proceedings by IDEM, OAQ, to reopen and revise this permit shall follow the same procedures as apply to initial permit issuance and shall affect only those parts of this permit for which cause to reopen exists. Such reopening and revision shall be made as expeditiously as practicable. [326 IAC 2-7-9(b)]

(d) The reopening and revision of this permit, under 326 IAC 2-7-9(a), shall not be initiated before notice of such intent is provided to the Permittee by IDEM, OAQ, at least thirty (30) days in advance of the date this permit is to be reopened, except that IDEM, OAQ, may provide a shorter time period in the case of an emergency. [326 IAC 2-7-9(c)]

B.17 Permit Renewal [326 IAC 2-7-3] [326 IAC 2-7-4] [326 IAC 2-7-8(e)]

(a) The application for renewal shall be submitted using the application form or forms prescribed by IDEM, OAQ, and shall include the information specified in 326 IAC 2-7-4. Such information shall be included in the application for each emission unit at this source, except those emission units included on the trivial or insignificant activities list contained in 326 IAC 2-7-1(21) and 326 IAC 2-7-1(40). The renewal application does require the certification by the "responsible official" as defined by 326 IAC 2-7-1(34).

Request for renewal shall be submitted to:

Indiana Department of Environmental Management
Permits Branch, Office of Air Quality
100 North Senate Avenue
MC 61-53 IGCN 1003
Indianapolis, Indiana 46204-2251

(b) A timely renewal application is one that is:

(1) Submitted at least nine (9) months prior to the date of the expiration of this permit; and

(2) If the date postmarked on the envelope or certified mail receipt, or affixed by the shipper on the private shipping receipt, is on or before the date it is due. If the document is submitted by any other means, it shall be considered timely if received by IDEM, OAQ, on or before the date it is due.

(c) If the Permittee submits a timely and complete application for renewal of this permit, the source's failure to have a permit is not a violation of 326 IAC 2-7 until IDEM, OAQ takes final action on the renewal application, except that this protection shall cease to apply if, subsequent to the completeness determination, the Permittee fails to submit by the deadline specified in writing by IDEM, OAQ any additional information identified as being needed to process the application.

B.18 Permit Amendment or Modification [326 IAC 2-7-11] [326 IAC 2-7-12] [40 CFR 72]

(a) Permit amendments and modifications are governed by the requirements of 326 IAC 2-7-11 or 326 IAC 2-7-12 whenever the Permittee seeks to amend or modify this permit.

(b) Any application requesting an amendment or modification of this permit shall be submitted to:

Indiana Department of Environmental Management
Permits Branch, Office of Air Quality
100 North Senate Avenue
MC 61-53 IGCN 1003
Indianapolis, Indiana 46204-2251

Any such application shall be certified by the "responsible official" as defined by 326 IAC 2-7-1(34).

(c) The Permittee may implement administrative amendment changes addressed in the request for an administrative amendment immediately upon submittal of the request. [326 IAC 2-7-11(c)(3)]

B.19 Permit Revision Under Economic Incentives and Other Programs [326 IAC 2-7-5(8)] [326 IAC 2-7-12(b)(2)]

(a) No Part 70 permit revision shall be required under any approved economic incentives, marketable Part 70 permits, emissions trading, and other similar programs or processes for changes that are provided for in a Part 70 permit.

(b) Notwithstanding 326 IAC 2-7-12(b)(1) and 326 IAC 2-7-12(c)(1), minor Part 70 permit modification procedures may be used for Part 70 modifications involving the use of economic incentives, marketable Part 70 permits, emissions trading, and other similar approaches to the extent that such minor Part 70 permit modification procedures are explicitly provided for in the applicable State Implementation Plan (SIP) or in applicable requirements promulgated or approved by the U.S. EPA.

B.20 Operational Flexibility [326 IAC 2-7-20] [326 IAC 2-7-10.5]

(a) The Permittee may make any change or changes at the source that are described in 326 IAC 2-7-20(b),(c), or (e) without a prior permit revision, if each of the following conditions is met:

(1) The changes are not modifications under any provision of Title I of the Clean Air Act;

(2) Any preconstruction approval required by 326 IAC 2-7-10.5 has been obtained;

(3) The changes do not result in emissions which exceed the limitations provided in this permit (whether expressed herein as a rate of emissions or in terms of total emissions);

(4) The Permittee notifies the:

Indiana Department of Environmental Management
Permits Branch, Office of Air Quality
100 North Senate Avenue
MC 61-53 IGCN 1003
Indianapolis, Indiana 46204-2251

and

United States Environmental Protection Agency, Region V
Air and Radiation Division, Regulation Development Branch - Indiana (AR-18J)
77 West Jackson Boulevard
Chicago, Illinois 60604-3590

in advance of the change by written notification at least ten (10) days in advance of the proposed change. The Permittee shall attach every such notice to the Permittee's copy of this permit; and

(5) The Permittee maintains records on-site, on a rolling five (5) year basis, which document all such changes and emission trades that are subject to 326 IAC 2-7-

20(b),(c), or (e). The Permittee shall make such records available, upon reasonable request, for public review.

Such records shall consist of all information required to be submitted to IDEM, OAQ in the notices specified in 326 IAC 2-7-20(b)(1), (c)(1), and (e)(2).

(b) The Permittee may make Section 502(b)(10) of the Clean Air Act changes (this term is defined at 326 IAC 2-7-1(36)) without a permit revision, subject to the constraint of 326 IAC 2-7-20(a). For each such Section 502(b)(10) of the Clean Air Act change, the required written notification shall include the following:

(1) A brief description of the change within the source;

(2) The date on which the change will occur;

(3) Any change in emissions; and

(4) Any permit term or condition that is no longer applicable as a result of the change.

The notification which shall be submitted is not considered an application form, report or compliance certification. Therefore, the notification by the Permittee does not require the certification by the “responsible official” as defined by 326 IAC 2-7-1(34).

(c) Emission Trades [326 IAC 2-7-20(c)]
The Permittee may trade emissions increases and decreases at in the source, where the applicable SIP provides for such emission trades without requiring a permit revision, subject to the constraints of Section (a) of this condition and those in 326 IAC 2-7-20(c).

(d) Alternative Operating Scenarios [326 IAC 2-7-20(d)]
The Permittee may make changes at the source within the range of alternative operating scenarios that are described in the terms and conditions of this permit in accordance with 326 IAC 2-7-5(9). No prior notification of IDEM, OAQ, or U.S. EPA is required.

(e) Backup fuel switches specifically addressed in, and limited under, Section D of this permit shall not be considered alternative operating scenarios. Therefore, the notification requirements of part (a) of this condition do not apply.

B.21 Source Modification Requirement [326 IAC 2-7-10.5]

(a) A modification, construction, or reconstruction is governed by the requirements of 326 IAC 2 and 326 IAC 2-7-10.5.

(b) Any modification at an existing major source is governed by the requirements of 326 IAC 2-3-2.

B.22 Inspection and Entry [326 IAC 2-7-6] [IC 13-14-2-2] [IC 13-30-3-1] [IC 13-17-3-2]

Upon presentation of proper identification cards, credentials, and other documents as may be required by law, and subject to the Permittee’s right under all applicable laws and regulations to assert that the information collected by the agency is confidential and entitled to be treated as such, the Permittee shall allow IDEM, OAQ, U.S. EPA, or an authorized representative to perform the following:

(a) Enter upon the Permittee's premises where a Part 70 source is located, or emissions related activity is conducted, or where records must be kept under the conditions of this permit;

(b) As authorized by the Clean Air Act, IC 13-14-2-2, IC 13-17-3-2, and IC 13-30-3-1, have access to and copy any records that must be kept under the conditions of this permit;

(c) As authorized by the Clean Air Act, IC 13-14-2-2, IC 13-17-3-2, and IC 13-30-3-1, inspect any facilities, equipment (including monitoring and air pollution control equipment), practices, or operations regulated or required under this permit;

(d) As authorized by the Clean Air Act, IC 13-14-2-2, IC 13-17-3-2, and IC 13-30-3-1, sample or monitor substances or parameters for the purpose of assuring compliance with this permit or applicable requirements; and

(e) As authorized by the Clean Air Act, IC 13-14-2-2, IC 13-17-3-2, and IC 13-30-3-1, utilize any photographic, recording, testing, monitoring, or other equipment for the purpose of assuring compliance with this permit or applicable requirements.

B.23 Transfer of Ownership or Operational Control [326 IAC 2-7-11]

(a) The Permittee must comply with the requirements of 326 IAC 2-7-11 whenever the Permittee seeks to change the ownership or operational control of the source and no other change in the permit is necessary.

(b) Any application requesting a change in the ownership or operational control of the source shall contain a written agreement containing a specific date for transfer of permit responsibility, coverage and liability between the current and new Permittee. The application shall be submitted to:

Indiana Department of Environmental Management
Permits Branch, Office of Air Quality
100 North Senate Avenue
MC 61-53 IGCN 1003
Indianapolis, Indiana 46204-2251

The application which shall be submitted by the Permittee does require the certification by the "responsible official" as defined by 326 IAC 2-7-1(34).

(c) The Permittee may implement administrative amendment changes addressed in the request for an administrative amendment immediately upon submittal of the request. [326 IAC 2-7-11(c)(3)]

B.24 Annual Fee Payment [326 IAC 2-7-19] [326 IAC 2-7-5(7)] [326 IAC 2-1.1-7]

(a) The Permittee shall pay annual fees to IDEM, OAQ, within thirty (30) calendar days of receipt of a billing. Pursuant to 326 IAC 2-7-19(b), if the Permittee does not receive a bill from IDEM, OAQ, the applicable fee is due April 1 of each year.

(b) Except as provided in 326 IAC 2-7-19(e), failure to pay may result in administrative enforcement action or revocation of this permit.

(c) The Permittee may call the following telephone numbers: 1-800-451-6027 or 317-233-4230 (ask for OAQ, Billing, Licensing, and Training Section), to determine the appropriate permit fee.

B.25 Credible Evidence [326 IAC 2-7-5(3)] [326 IAC 2-7-6] [62 FR 8314] [326 IAC 1-1-6]

For the purpose of submitting compliance certifications or establishing whether or not the Permittee has violated or is in violation of any condition of this permit, nothing in this permit shall preclude the use, including the exclusive use, of any credible evidence or information relevant to whether the Permittee would have been in compliance with the condition of this permit if the appropriate performance or compliance test or procedure had been performed.

SECTION C **SOURCE OPERATION CONDITIONS**

Entire Source

Emission Limitations and Standards [326 IAC 2-7-5(1)]

C.1 Particulate Emission Limitations For Processes with Process Weight Rates Less Than One Hundred (100) Pounds per Hour [326 IAC 6-3-2]

Pursuant to 326 IAC 6-3-2(e)(2), particulate emissions from any process not exempt under 326 IAC 6-3-1(b) or (c) which has a maximum process weight rate less than 100 pounds per hour and the methods in 326 IAC 6-3-2(b) through (d) do not apply shall not exceed 0.551 pounds per hour.

C.2 Opacity [326 IAC 5-1]

Pursuant to 326 IAC 5-1-2 (Opacity Limitations), except as provided in 326 IAC 5-1-3 (Temporary Alternative Opacity Limitations), opacity shall meet the following, unless otherwise stated in this permit:

(a) Opacity shall not exceed an average of forty percent (40%) in any one (1) six (6) minute averaging period as determined in 326 IAC 5-1-4.

(b) Opacity shall not exceed sixty percent (60%) for more than a cumulative total of fifteen (15) minutes (sixty (60) readings as measured according to 40 CFR 60, Appendix A, Method 9 or fifteen (15) one (1) minute nonoverlapping integrated averages for a continuous opacity monitor) in a six (6) hour period.

C.3 Open Burning [326 IAC 4-1] [IC 13-17-9]

The Permittee shall not open burn any material except as provided in 326 IAC 4-1-3, 326 IAC 4-1-4 or 326 IAC 4-1-6. The previous sentence notwithstanding, the Permittee may open burn in accordance with an open burning approval issued by the Commissioner under 326 IAC 4-1-4.1.

C.4 Incineration [326 IAC 4-2] [326 IAC 9-1-2]

The Permittee shall not operate an incinerator or incinerate any waste or refuse except as provided in 326 IAC 4-2 and 326 IAC 9-1-2.

C.5 Fugitive Dust Emissions [326 IAC 6-4]

The Permittee shall not allow fugitive dust to escape beyond the property line or boundaries of the property, right-of-way, or easement on which the source is located, in a manner that would violate 326 IAC 6-4 (Fugitive Dust Emissions).

C.6 Asbestos Abatement Projects [326 IAC 14-10] [326 IAC 18] [40 CFR 61, Subpart M]

(a) Notification requirements apply to each owner or operator. If the combined amount of regulated asbestos containing material (RACM) to be stripped, removed or disturbed is at least 260 linear feet on pipes or 160 square feet on other facility components, or at least thirty-five (35) cubic feet on all facility components, then the notification requirements of 326 IAC 14-10-3 are mandatory. All demolition projects require notification whether or not asbestos is present.

(b) The Permittee shall ensure that a written notification is sent on a form provided by the Commissioner at least ten (10) working days before asbestos stripping or removal work or before demolition begins, per 326 IAC 14-10-3, and shall update such notice as necessary, including, but not limited to the following:

(1) When the amount of affected asbestos containing material increases or decreases by at least twenty percent (20%); or

(2) If there is a change in the following:

(A) Asbestos removal or demolition start date;

(B) Removal or demolition contractor; or

(C) Waste disposal site.

(c) The Permittee shall ensure that the notice is postmarked or delivered according to the guidelines set forth in 326 IAC 14-10-3(2).

(d) The notice to be submitted shall include the information enumerated in 326 IAC 14-10-3(3).

All required notifications shall be submitted to:

Indiana Department of Environmental Management
Asbestos Section, Office of Air Quality
100 North Senate Avenue
MC 61-52 IGCN 1003
Indianapolis, Indiana 46204-2251

The notice shall include a signed certification from the owner or operator that the information provided in this notification is correct and that only Indiana licensed workers and project supervisors will be used to implement the asbestos removal project. The notifications do not require a certification by the "responsible official" as defined by 326 IAC 2-7-1(34).

(e) Procedures for Asbestos Emission Control
The Permittee shall comply with the applicable emission control procedures in 326 IAC 14-10-4 and 40 CFR 61.145(c). Per 326 IAC 14-10-1, emission control requirements are applicable for any removal or disturbance of RACM greater than three (3) linear feet on pipes or three (3) square feet on any other facility components or a total of at least 0.75 cubic feet on all facility components.

(f) Demolition and Renovation
The Permittee shall thoroughly inspect the affected facility or part of the facility where the demolition or renovation will occur for the presence of asbestos pursuant to 40 CFR 61.145(a).

(g) Indiana Accredited Asbestos Inspector
The Permittee shall comply with 326 IAC 14-10-1(a) that requires the owner or operator, prior to a renovation/demolition, to use an Indiana Accredited Asbestos Inspector to thoroughly inspect the affected portion of the facility for the presence of asbestos. The requirement to use an Indiana Accredited Asbestos inspector is not federally enforceable.

Testing Requirements [326 IAC 2-7-6(1)]

C.7 Performance Testing [326 IAC 3-6]

(a) All testing shall be performed according to the provisions of 326 IAC 3-6 (Source Sampling Procedures), except as provided elsewhere in this permit, utilizing any applicable procedures and analysis methods specified in 40 CFR 51, 40 CFR 60, 40 CFR 61, 40 CFR 63, 40 CFR 75, or other procedures approved by IDEM, OAQ.

A test protocol, except as provided elsewhere in this permit, shall be submitted to:

Indiana Department of Environmental Management
Compliance Data Section, Office of Air Quality
100 North Senate Avenue

MC 61-53 IGCN 1003
Indianapolis, Indiana 46204-2251

no later than thirty-five (35) days prior to the intended test date. The protocol submitted by the Permittee does not require certification by the "responsible official" as defined by 326 IAC 2-7-1(34).

(b) The Permittee shall notify IDEM, OAQ of the actual test date at least fourteen (14) days prior to the actual test date. The notification submitted by the Permittee does not require certification by the "responsible official" as defined by 326 IAC 2-7-1(34).

(c) Pursuant to 326 IAC 3-6-4(b), all test reports must be received by IDEM, OAQ not later than forty-five (45) days after the completion of the testing. An extension may be granted by IDEM, OAQ, if the Permittee submits to IDEM, OAQ, a reasonable written explanation not later than five (5) days prior to the end of the initial forty-five (45) day period.

Compliance Requirements [326 IAC 2-1.1-11]

C.8 Compliance Requirements [326 IAC 2-1.1-11]

The commissioner may require stack testing, monitoring, or reporting at any time to assure compliance with all applicable requirements by issuing an order under 326 IAC 2-1.1-11. Any monitoring or testing shall be performed in accordance with 326 IAC 3 or other methods approved by the commissioner or the U. S. EPA.

Compliance Monitoring Requirements [326 IAC 2-7-5(1)] [326 IAC 2-7-6(1)]

C.9 Compliance Monitoring [326 IAC 2-7-5(3)] [326 IAC 2-7-6(1)]

Unless otherwise specified in this permit, all monitoring and record keeping requirements not already legally required shall be implemented within ninety (90) days of permit issuance. For new units, the monitoring and record keeping shall begin upon initial startup. If required by Section D, the Permittee shall be responsible for installing any necessary equipment and initiating any required monitoring related to that equipment. If due to circumstances beyond its control, that equipment cannot be installed and operated within ninety (90) days, the Permittee may extend the compliance schedule related to the equipment for an additional ninety (90) days provided the Permittee notifies:

Indiana Department of Environmental Management
Compliance Branch, Office of Air Quality
100 North Senate Avenue
MC 61-53 IGCN 1003
Indianapolis, Indiana 46204-2251

in writing, prior to the end of the initial ninety (90) day compliance schedule, with full justification of the reasons for the inability to meet this date.

The notification which shall be submitted by the Permittee does require the certification by the "responsible official" as defined by 326 IAC 2-7-1(34).

Unless otherwise specified in the approval for the new emission unit(s), compliance monitoring for new emission units or emission units added through a source modification shall be implemented when operation begins.

C.10 Maintenance of Continuous Opacity Monitoring Equipment [326 IAC 2-7-5(3)(A)(iii)]

(a) The Permittee shall install, calibrate, maintain, and operate all necessary continuous opacity monitoring systems (COMS) and related equipment.

(b) All COMS shall meet the performance specifications of 40 CFR 60, Appendix B, Performance Specification No. 1, and are subject to monitor system certification requirements pursuant to 326 IAC 3-5.

(c) In the event that a breakdown of a COMS occurs, a record shall be made of the times and reasons of the breakdown and efforts made to correct the problem.

(d) Whenever a COMS is malfunctioning or is down for maintenance or repairs for a period of twenty-four (24) hours or more and a backup COMS is not online within twenty-four (24) hours of shutdown or malfunction of the primary COMS, the Permittee shall provide a certified opacity reader, who may be an employee of the Permittee or an independent contractor, to self-monitor the emissions from the emission unit stack.

(1) Visible emission readings shall be performed in accordance with 40 CFR 60, Appendix A, Method 9, for a minimum of five (5) consecutive six (6) minute averaging periods beginning not more than twenty-four (24) hours after the start of the malfunction or down time.

(2) Method 9 opacity readings shall be repeated for a minimum of five (5) consecutive six (6) minute averaging periods at least twice per day during daylight operations, with at least four (4) hours between each set of readings, until a COMS is online.

(3) Method 9 readings may be discontinued once a COMS is online.

(4) Any opacity exceedances determined by Method 9 readings shall be reported with the Quarterly Opacity Exceedances Reports.

(e) Nothing in this permit shall excuse the Permittee from complying with the requirements to operate a continuous opacity monitoring system pursuant to 326 IAC 3-5, (and 40 CFR 60 and/or 40 CFR 63).

C.11 Maintenance of Continuous Emission Monitoring Equipment [326 IAC 2-7-5(3)(A)(iii)]

(a) The Permittee shall install, calibrate, maintain, and operate all necessary continuous emission monitoring systems (CEMS) and related equipment.

(b) In the event that a breakdown of a continuous emission monitoring system occurs, a record shall be made of the times and reasons of the breakdown and efforts made to correct the problem.

(c) Whenever a continuous emission monitor other than an opacity monitor is malfunctioning or will be down for calibration, maintenance, or repairs for a period of four (4) hours or more, a calibrated backup CEMS shall be brought online within four (4) hours of shutdown of the primary CEMS, and shall be operated until such time as the primary CEMS is back in operation.

(d) Nothing in this permit shall excuse the Permittee from complying with the requirements to operate a continuous emission monitoring system pursuant to 40 CFR 63.1572 (b).

C.12 Monitoring Methods [326 IAC 3] [40 CFR 60] [40 CFR 63]

Any monitoring or testing required by Section D of this permit shall be performed according to the provisions of 326 IAC 3, 40 CFR 60, Appendix A, 40 CFR 60 Appendix B, 40 CFR 63, or other approved methods as specified in this permit.

C.13 Instrument Specifications [326 IAC 2-1.1-11] [326 IAC 2-7-5(3)] [326 IAC 2-7-6(1)]

(a) When required by any condition of this permit, an analog instrument used to measure a parameter related to the operation of an air pollution control device shall have a scale such that the expected maximum reading for the normal range shall be no less than twenty percent (20%) of full scale.

(b) The Permittee may request that the IDEM, OAQ approve the use of an instrument that does not meet the above specifications provided the Permittee can demonstrate that an

alternative instrument specification will adequately ensure compliance with permit conditions requiring the measurement of the parameters.

Corrective Actions and Response Steps [326 IAC 2-7-5] [326 IAC 2-7-6]

C.14 Emergency Reduction Plans [326 IAC 1-5-2] [326 IAC 1-5-3]

Pursuant to 326 IAC 1-5-2 (Emergency Reduction Plans; Submission):

(a) The Permittee shall prepare written emergency reduction plans (ERPs) consistent with safe operating procedures.

(b) These ERPs shall be submitted for approval to:

Indiana Department of Environmental Management
Compliance Branch, Office of Air Quality
100 North Senate Avenue
MC 61-53 IGCN 1003
Indianapolis, Indiana 46204-2251

within ninety (90) days after the date of issuance of this permit.

The ERP does require the certification by the "responsible official" as defined by 326 IAC 2-7-1(34).

(c) If the ERP is disapproved by IDEM, OAQ, the Permittee shall have an additional thirty (30) days to resolve the differences and submit an approvable ERP.

(d) These ERPs shall state those actions that will be taken, when each episode level is declared, to reduce or eliminate emissions of the appropriate air pollutants.

(e) Said ERPs shall also identify the sources of air pollutants, the approximate amount of reduction of the pollutants, and a brief description of the manner in which the reduction will be achieved.

(f) Upon direct notification by IDEM, OAQ that a specific air pollution episode level is in effect, the Permittee shall immediately put into effect the actions stipulated in the approved ERP for the appropriate episode level.
[326 IAC 1-5-3]

C.15 Risk Management Plan [326 IAC 2-7-5(12)] [40 CFR 68]

If a regulated substance, as defined in 40 CFR 68, is present at a source in more than a threshold quantity, the Permittee must comply with the applicable requirements of 40 CFR 68.

C.16 Response to Excursions or Exceedances [326 IAC 2-7-5] [326 IAC 2-7-6]

(a) Upon detecting an excursion or exceedance, the Permittee shall restore operation of the emissions unit (including any control device and associated capture system) to its normal or usual manner of operation as expeditiously as practicable in accordance with good air pollution control practices for minimizing emissions.

(b) The response shall include minimizing the period of any startup, shutdown or malfunction and taking any necessary corrective actions to restore normal operation and prevent the likely recurrence of the cause of an excursion or exceedance (other than those caused by excused startup or shutdown conditions). Corrective actions may include, but are not limited to, the following:

(1) initial inspection and evaluation;

(2) recording that operations returned to normal without operator action (such as through response by a computerized distribution control system); or

(3) any necessary follow-up actions to return operation to within the indicator range, designated condition, or below the applicable emission limitation or standard, as applicable.

(c) A determination of whether the Permittee has used acceptable procedures in response to an excursion or exceedance will be based on information available, which may include, but is not limited to, the following:

(1) monitoring results;

(2) review of operation and maintenance procedures and records;

(3) inspection of the control device, associated capture system, and the process.

(d) Failure to take reasonable response steps shall be considered a deviation from the permit.

(e) The Permittee shall maintain the following records:

(1) monitoring data;

(2) monitor performance data, if applicable; and

(3) corrective actions taken.

C.17 Actions Related to Noncompliance Demonstrated by a Stack Test [326 IAC 2-7-5] [326 IAC 2-7-6]

(a) When the results of a stack test performed in conformance with Section C - Performance Testing, of this permit exceed the level specified in any condition of this permit, the Permittee shall take appropriate response actions. The Permittee shall submit a description of these response actions to IDEM, OAQ, within thirty (30) days of receipt of the test results. The Permittee shall take appropriate action to minimize excess emissions from the affected facility while the response actions are being implemented.

(b) A retest to demonstrate compliance shall be performed within one hundred twenty (120) days of receipt of the original test results. Should the Permittee demonstrate to IDEM, OAQ that retesting in one hundred twenty (120) days is not practicable, IDEM, OAQ may extend the retesting deadline.

(c) IDEM, OAQ reserves the authority to take any actions allowed under law in response to noncompliant stack tests.

The response action documents submitted pursuant to this condition do require the certification by the "responsible official" as defined by 326 IAC 2-7-1(34).

Record Keeping and Reporting Requirements [326 IAC 2-7-5(3)] [326 IAC 2-7-19]

C.18 Emission Statement [326 IAC 2-7-5(3)(C)(iii)] [326 IAC 2-7-5(7)] [326 IAC 2-7-19(c)] [326 IAC 2-6]

(a) Pursuant to 326 IAC 2-6-3(a)(1), the Permittee shall submit by July 1 of each year an emission statement covering the previous calendar year. The emission statement shall contain, at a minimum, the information specified in 326 IAC 2-6-4(c) and shall meet the following requirements:

(1) Indicate estimated actual emissions of all pollutants listed in 326 IAC 2-6-4(a);

(2) Indicate estimated actual emissions of regulated pollutants as defined by 326 IAC 2-7-1 (32) ("Regulated pollutant, which is used only for purposes of Section 19 of this rule") from the source, for purpose of fee assessment.

The statement must be submitted to:

Indiana Department of Environmental Management
Technical Support and Modeling Section, Office of Air Quality
100 North Senate Avenue
MC 61-50 IGCN 1003
Indianapolis, Indiana 46204-2251

The emission statement does require the certification by the "responsible official" as defined by 326 IAC 2-7-1(34).

(b) The emission statement required by this permit shall be considered timely if the date postmarked on the envelope or certified mail receipt, or affixed by the shipper on the private shipping receipt, is on or before the date it is due. If the document is submitted by any other means, it shall be considered timely if received by IDEM, OAQ on or before the date it is due.

C.19 General Record Keeping Requirements [326 IAC 2-7-5(3)] [326 IAC 2-7-6] [326 IAC 2-2] [326 IAC 2-3]

(a) Records of all required data, reports and support information required by this permit shall be retained for a period of at least five (5) years from the date of monitoring sample, measurement, report, or application. These records shall be physically present or electronically accessible at the source location for a minimum of three (3) years. The records may be stored elsewhere for the remaining two (2) years as long as they are available upon request. If the Commissioner makes a request for records to the Permittee, the Permittee shall furnish the records to the Commissioner within a reasonable time.

(b) Unless otherwise specified in this permit, all record keeping requirements not already legally required shall be implemented within ninety (90) days of permit issuance.

(c) If there is a "project" (as defined in 326 IAC 2-2-1 (qq)) and/or 326 IAC 2-3-1(ll)) at an existing emissions unit, other than projects at a source with a Plantwide Applicability Limitation (PAL), which is not part of a "major modification" (as defined in 326 IAC 2-2-1(ee) and/or 326 IAC 2-3-1(z)) and the Permittee elects to utilize the "projected actual emissions" (as defined in 326 IAC 2-2-1(rr) and/or 326 IAC 2-3-1(mm)), the Permittee shall comply with following:

(1) Prior to commencing the construction of the "project" (as defined in 326 IAC 2-2-1(qq)) at an existing emissions unit, document and maintain the following records:
- (A) A description of the project;
- (B) Identification of any emissions unit whose emissions of a regulated new source review pollutant could be affected by the project;
- (C) A description of the applicability test used to determine that the project is not a major modification for any regulated NSR pollutant, including:
  - (i) Baseline actual emissions;
  - (ii) Projected actual emissions;
  - (iii) Amount of emissions excluded under section 326 IAC 2-2-1(rr)(2)(A)(iii); and
  - (iv) An explanation for why the amount was excluded, and any netting calculations, if applicable.

(2) Monitor the emissions of any regulated NSR pollutant that could increase as a result of the project and that is emitted by any existing emissions unit identified in (1)(B) above; and

(3) Calculate and maintain a record of the annual emissions, in tons per year on a calendar year basis, for a period of five (5) years following resumption of regular operations after the change, or for a period of ten (10) years following resumption

of regular operations after the change if the project increases the design capacity or the potential to emit that regulated NSR pollutant at the emissions unit.

C.20 General Reporting Requirements [326 IAC 2-7-5(3)(C)] [326 IAC 2-1.1-11] [326 IAC 2-2] [326 IAC 2-3]

(a) The Permittee shall submit the attached Quarterly Deviation and Compliance Monitoring Report or its equivalent. Any deviation from permit requirements, the date(s) of each deviation, the cause of the deviation, and the response steps taken must be reported. This report shall be submitted within thirty (30) days of the end of the reporting period. The Quarterly Deviation and Compliance Monitoring Report shall include the certification by the "responsible official" as defined by 326 IAC 2-7-1(34).

(b) The report required in (a) of this condition and reports required by conditions in Section D of this permit shall be submitted to:

Indiana Department of Environmental Management
Compliance Data Section, Office of Air Quality
100 North Senate Avenue
MC 61-53 IGCN 1003
Indianapolis, Indiana 46204-2251

(c) Unless otherwise specified in this permit, any notice, report, or other submission required by this permit shall be considered timely if the date postmarked on the envelope or certified mail receipt, or affixed by the shipper on the private shipping receipt, is on or before the date it is due. If the document is submitted by any other means, it shall be considered timely if received by IDEM, OAQ, on or before the date it is due.

(d) Unless otherwise specified in this permit, all reports required in Section D of this permit shall be submitted within thirty (30) days of the end of the reporting period. All reports do require the certification by the "responsible official" as defined by 326 IAC 2-7-1(34).

(e) The first report shall cover the period commencing on the date of issuance of this permit and ending on the last day of the reporting period. Reporting periods are based on calendar years, unless otherwise specified in this permit. For the purpose of this permit “calendar year” means the twelve (12) month period from January 1 to December 31 inclusive.

(f) If the Permittee is required to comply with the recordkeeping provisions of (c) in Section C- General Record Keeping Requirements for any “project” (as defined in 326 IAC 2-2-1(qq) and/or 326 IAC 2-3-1(ll) at an existing emissions unit, and the project meets the following criteria, then the Permittee shall submit a report to IDEM, OAQ:

(1) The annual emissions, in tons per year, from the project identified in (c)(1) in Section C- General Record Keeping Requirements exceed the baseline actual emissions, as documented and maintained under Section C- General Record Keeping Requirements (c)(1)(C)(i), by a significant amount, as defined in 326 IAC 2-2-1(xx) and/or 326 IAC 2-3-1(qq), for that regulated NSR pollutant, and

(2) The emissions differ from the preconstruction projection as documented and maintained under Section C- General Record Keeping Requirements (c)(1)(C)(ii).

(g) The report for project at an existing emissions unit shall be submitted within sixty (60) days after the end of the year and contain the following:

(1) The name, address, and telephone number of the major stationary source.

(2) The annual emissions calculated in accordance with (c)(2) and (3) in Section C- General Record Keeping Requirements.

(3) The emissions calculated under the actual-to-projected actual test stated in 326 IAC 2-2-2(d)(3) and/or 326 IAC 2-3-2(c)(3).

(4) Any other information that the Permittee deems fit to include in this report,

Reports required in this part shall be submitted to:

Indiana Department of Environmental Management
Air Compliance Section, Office of Air Quality
MC 61-53 IGCN 1003
100 North Senate Avenue
Indianapolis, Indiana 46204-2251

(h) The Permittee shall make the information required to be documented and maintained in accordance with (c) in Section C- General Record Keeping Requirements available for review upon a request for inspection by IDEM, OAQ. The general public may request this information from the IDEM, OAQ under 326 IAC 17.1.

Stratospheric Ozone Protection

C.21 Compliance with 40 CFR 82 and 326 IAC 22-1

Pursuant to 40 CFR 82 (Protection of Stratospheric Ozone), Subpart F, except as provided for motor vehicle air conditioners in Subpart B, the Permittee shall comply with the standards for recycling and emissions reduction:

(a) Persons opening appliances for maintenance, service, repair, or disposal must comply with the required practices pursuant to 40 CFR 82.156.

(b) Equipment used during the maintenance, service, repair, or disposal of appliances must comply with the standards for recycling and recovery equipment pursuant to 40 CFR 82.158.

(c) Persons performing maintenance, service, repair, or disposal of appliances must be certified by an approved technician certification program pursuant to 40 CFR 82.161.

SECTION D.1 FACILITY OPERATION CONDITIONS

Facility Description [326 IAC 2-7-5(15)]:

(a) one (1) Truck loading rack, with a maximum capacity of 60,000 gallons of submerged loading of gasoline, kerosene or distillate oil per hour, installed in 1958, identified as Loading Rack, and exhausting to stack 65; controlled by the Loading Rack Flare, equipped with a 0.09 million British Thermal Units per hour (mmBtu/hr) natural gas fired pilot and designed to handle 160 actual cubic feet per minute (acfm) of hydrocarbon vapors, installed in 1998, and exhausting to stack 1D; Under 40 CFR 63, Subpart R, this facility is considered an existing bulk gasoline terminal.

(The information describing the process contained in this emissions unit description box is descriptive information and does not constitute enforceable conditions.)

Emission Limitations and Standards [326 IAC 2-7-5(1)]

D.1.1 General Provisions Relating to HAPs [326 IAC 20-1-1] [40 CFR Part 63, Subpart A]

The provisions of 40 CFR Part 63, Subpart A - General Provisions, which are incorporated as 326 IAC 20-1-1, apply to the facility described in this section except when otherwise specified in Table 1 of 40 CFR Part 63, Subpart R (pursuant to 40 CFR Part 63.420(i) and 63.650, the loading rack is subject to only following sections of subpart R: 63.421, 63.422 (a) through (c), 63.425 (a) through (c) and (e) through (h), 63.427 (a) & (b), and 63.428(b), (c), (g)(1), and (h) (1) through (3)).

D.1.2 Gasoline Distribution Facilities NESHAP [326 IAC 20-10-1] [40 CFR 63, Subpart R]

Pursuant to 40 CFR Part 63.420(i) and 63.650 (Subpart CC), only the partial provisions of 40 CFR 63, Subpart R - National Emission Standards for Gasoline Distribution Facilities, which are incorporated by reference as 326 IAC 20-10-1, apply to the truck loading rack and flare . These provisions include: 63.421, 63.422 (a) through (c), 63.425 (a) through (c) and (e) through (h), 63.427 (a) & (b), and 63.428(b), (c), (g)(1), and (h) (1) through (3). A copy of this rule is attached.

D.1.3 Standards for Volatile Organic Compound (VOC) Emissions from Loading Racks [40 CFR 63.422]

Pursuant to 40 CFR 63.422, the following shall apply to the loading rack, identified as Loading Rack:

(a) Pursuant to 40 CFR 63.422, the following shall apply to the gasoline loading rack (LOAD):

(1) The Permittee shall comply with the requirements in 40 CFR 60.502 except for paragraphs (b), (c), and (j) of that section.

(2) Emissions to the atmosphere from the vapor collection and processing systems due to the loading of gasoline cargo tanks shall not exceed 10 milligrams of total organic compounds per liter of gasoline loaded.

(3) The Permittee shall comply with 40 CFR 60.502(e) as follows:

40 CFR 60.502(e)(5) is changed to read: The Permittee shall take steps assuring that the nonvapor-tight gasoline cargo tank will not be reloaded at the facility until vapor tightness documentation for that gasoline cargo tank is obtained which documents that:

(i) The gasoline cargo tank meets the applicable test requirements in 40 CFR 63.425(e);

(ii) For each gasoline cargo tank failing the test in 40 CFR 63.425 (f) or (g) at the facility, the cargo tank either:

(A) Before repair work is performed on the cargo tank, meets the test

requirements in 40 CFR 63.425 (g) or (h), or

(B) After repair work is performed on the cargo tank before or during the tests in 40 CFR 63.425 (g) or (h), subsequently passes the annual certification test described in 40 CFR 63.425(e).

D.1.4 Preventive Maintenance Plan [326 IAC 2-7-5(13)]

A Preventive Maintenance Plan, in accordance with Section B - Preventive Maintenance Plan, of this permit, is required for the Truck loading rack, identified as Loading Rack, and any control devices.

Compliance Determination Requirements [326 IAC 2-1.1-11] [326 IAC 2-7-6(1)]

D.1.5 Performance Testing [40 CFR 63.425]

(a) An initial performance test on the loading rack flare was conducted on August 21, 1998 and report was submitted to IDEM, OAQ on September 26, 1998.

(b) If a flare is used to control emissions, and emissions from this device cannot be measured using the test methods and procedures in 40 CFR 60.503, the provisions of 40 CFR 63.11(b) shall apply.

(c) Annual certification test.
The annual certification test for gasoline cargo tanks shall consist of the following test methods and procedures:

(1) Method 27, appendix A, 40 CFR part 60. Conduct the test using a time period (t) for the pressure and vacuum tests of 5 minutes. The initial pressure (P_i) for the pressure test shall be 460 mm H_2O (18 in. H_2O), gauge. The initial vacuum (V_i) for the vacuum test shall be 150 mm H_2O (6 in. H_2O), gauge. The maximum allowable pressure and vacuum changes () p,) v) are as shown in the second column of Table 2 of this paragraph.

(2) Pressure test of the cargo tank's internal vapor valve as follows:

(i) After completing the tests under paragraph (e)(1) of this condition, use the procedures in Method 27 to repressurize the tank to 460 mm H_2O (18 in. H_2O), gauge. Close the tanks internal vapor valve(s), thereby isolating the vapor return line and manifold from the tank.

(ii) Relieve the pressure in the vapor return line to atmospheric pressure, then reseal the line. After 5 minutes, record the gauge pressure in the vapor return line and manifold. The maximum allowable 5-minute pressure increase is 130 mm H_2O (5 in. H_2O).

(d) Leak detection test.
The leak detection test shall be performed using Method 21, appendix A, 40 CFR part 60, except omit section 4.3.2 of Method 21. A vapor-tight gasoline cargo tank shall have no leaks at any time when tested according to the procedures in this paragraph.

(1) The leak definition shall be 21,000 ppm as propane. Use propane to calibrate the instrument, setting the span at the leak definition. The response time to 90 percent of the final stable reading shall be less than 8 seconds for the detector with the sampling line and probe attached.

(2) In addition to the procedures in Method 21, include the following procedures:

(i) Perform the test on each compartment during loading of that compartment or while the compartment is still under pressure.

(ii) To eliminate a positive instrument drift, the dwell time for each leak detection shall not exceed two times the instrument response time. Purge the instrument with ambient air between each leak detection. The

duration of the purge shall be in excess of two instrument response times.

(iii) Attempt to block the wind from the area being monitored. Record the highest detector reading and location for each leak.

(e) Nitrogen pressure decay field test.
For those cargo tanks with manifolded product lines, this test procedure shall be conducted on each compartment.

(1) Record the cargo tank capacity.
Upon completion of the loading operation, record the total volume loaded. Seal the cargo tank vapor collection system at the vapor coupler. The sealing apparatus shall have a pressure tap. Open the internal vapor valve(s) of the cargo tank and record the initial headspace pressure. Reduce or increase, as necessary, the initial headspace pressure to 460 mm H_2O (18.0 in. H_2O), gauge by releasing pressure or by adding commercial grade nitrogen gas from a high pressure cylinder capable of maintaining a pressure of 2,000 psig.

(i) The cylinder shall be equipped with a compatible two-stage regulator with a relief valve and a flow control metering valve. The flow rate of the nitrogen shall be no less than 2 cfm. The maximum allowable time to pressurize cargo tanks with headspace volumes of 1,000 gallons or less to the appropriate pressure is 4 minutes. For cargo tanks with a headspace of greater than 1,000 gallons, use as a maximum allowable time to pressurize 4 minutes or the result from the equation below, whichever is greater.
$T = V_h \times 0.004$

where: T = maximum allowable time to pressurize the cargo tank, min;
V_h = cargo tank headspace volume during testing, gal.

(2) It is recommended that after the cargo tank headspace pressure reaches approximately 460 mm H_2O (18 in. H_20), gauge, a fine adjust valve be used to adjust the headspace pressure to 460 mm H_2O (18.0 in. H_2O), gauge for the next 30 ± 5 seconds.

(3) Reseal the cargo tank vapor collection system and record the headspace pressure after 1 minute. The measured headspace pressure after 1 minute shall be greater than the minimum allowable final headspace pressure (P_F) as calculated from the following equation:

$$P_F = 18\left(\frac{(18 - N)}{18}\right)^{\left(\frac{V_s}{5(V_h)}\right)}$$

where: (P_F) = Minimum allowable final headspace pressure, in. H_2O, gauge;
V_s = total cargo tank shell capacity, gal;
V_h = cargo tank headspace volume after loading, gal;
18.0 = initial pressure at start of test, in. H_2O, gauge;

N = 5-minute continuous performance standard at any time from the third column of Table 2 of 40 CFR 63.425(e)(i), inches H_2O.

(4) Conduct the internal vapor valve portion of this test by repressurizing the cargo tank headspace with nitrogen to 460 mm H_2O (18 in. H_2O), gauge. Close the internal vapor valve(s), wait for 30 ± 5 seconds, then relieve the pressure downstream of the vapor valve in the vapor collection system to atmospheric pressure. Wait 15 seconds, then reseal the vapor collection system. Measure and

record the pressure every minute for 5 minutes. Within 5 seconds of the pressure measurement at the end of 5 minutes, open the vapor valve and record the headspace pressure as the “final pressure."

(5) If the decrease in pressure in the vapor collection system is less than at least one of the interval pressure change values in Table 3 of this paragraph, or if the final pressure is equal to or greater than 20 percent of the 1-minute final headspace pressure determined in the test in paragraph (g)(3) of this condition, then the cargo tank is considered to be a vapor-tight gasoline cargo tank.

(f) Continuous performance pressure decay test.
The continuous performance pressure decay test shall be performed using Method 27, appendix A, 40 CFR Part 60. Conduct only the positive pressure test using a time period (t) of 5 minutes. The initial pressure (P_i) shall be 460 mm H_2O (18 in. H_2O), gauge. The maximum allowable 5-minute pressure change (Up) which shall be met at any time is shown in the third column of Table 2 of 40 CFR 63.425(e)(1).

Compliance Monitoring Requirements [326 IAC 2-7-6(1)] [326 IAC 2-7-5(1)]

D.1.6 Continuous Monitoring [40 CFR 63.427]

Pursuant to 40 CFR 63.427, the truck loading rack, identified as Loading Rack, has applicable compliance monitoring conditions as specified below:

(a) The Permittee install, calibrate, certify, operate, and maintain, according to the manufacturer's specifications, a continuous monitoring system (CMS) as specified in the following paragraph.

Where a flare is used, a heat-sensing device, such as an ultraviolet beam sensor or a thermocouple, shall be installed in proximity to the pilot light to indicate the presence of a flame.

(b) Pursuant to 40 CFR 63.11(b) (Control Device Requirements) the following apply to this air assisted flare:

(1) Permittee shall monitor the flare to assure that it is operated and maintained in conformance with their designs.

(2) The flare shall be operated at all times when the emissions may be vented to it.

(3) The flare shall be operated with no visible emissions, except for periods not to exceed a total of 5 minutes during any 2 consecutive hours.

(4) The flare shall be operated with a flame present at all times. The presence of a flare pilot flame shall be monitored using a thermocouple or any other equivalent device to detect the presence of a flame.

(5) The flare shall be used only with the net heating value of the gas being combusted at 11.2 MJ/scm (300 Btu/scf) or greater.

(6) The air-assisted flare shall be designed and operated with an exit velocity less than the velocity Vmax. The maximum permitted velocity, Vmax for air-assisted flares shall be determined by the equation give in 40 CFR 63.11(b)(8).

Record Keeping and Reporting Requirements [326 IAC 2-7-5(3)] [326 IAC 2-7-19]

D.1.7 Record Keeping Requirements [40 CFR 63.428]

(a) The Permittee shall keep records of the test results for each gasoline cargo tank loading at the gasoline distribution facility as follows:

(1) Annual certification testing performed under 40 CFR 63.425(e); and

(2) Continuous performance testing performed at any time at that gasoline distribution facility under 40 CFR 63.425 (f), (g), and (h).

(3) The documentation file shall be kept up-to-date for each gasoline cargo tank loading at the gasoline distribution facility. The documentation for each test shall include, as a minimum, the following information:

(i) Name of test:
Annual Certification Test--Method 27 (40 CFR 63.425(e)(1)),
Annual Certification Test--Internal Vapor Valve (40 CFR 63.425(e)(2)),
Leak Detection Test (40 CFR 63.425(f)),
Nitrogen Pressure Decay Field Test (40 CFR 63.425(g)), or
Continuous Performance Pressure Decay Test (40 CFR 63.425(h)).

(ii) Cargo tank owner's name and address.

(iii) Cargo tank identification number.

(iv) Test location and date.

(v) Tester name and signature.

(vi) Witnessing inspector, if any: Name, signature, and affiliation.

(vii) Vapor tightness repair: Nature of repair work and when performed in relation to vapor tightness testing.

(viii) Test results: Pressure or vacuum change, mm of water; time period of test; number of leaks found with instrument and leak definition.

(b) The Permittee shall:

(1) Keep an up-to-date, readily accessible record of the continuous monitoring data required under 40 CFR 63.427(a). This record shall indicate the time intervals during which loadings of gasoline cargo tanks have occurred or, alternatively, shall record the operating parameter data only during such loadings. The date and time of day shall also be indicated at reasonable intervals on this record.

(2) Record and report simultaneously with the notification of compliance status required under 40 CFR 63.9(h):

(i) All data and calculations, engineering assessments, and manufacturer's recommendations used in determining the operating parameter value under 40 CFR 63.425(b); and

(ii) The following information when using a flare under provisions of 40 CFR 63.11(b) to comply with 40 CFR 63.422(b):

(A) Flare design (i.e., steam-assisted, air-assisted, or non-assisted); and

(B) All visible emissions readings, heat content determinations, flow rate measurements, and exit velocity determinations made during the compliance determination required under 40 CFR 63.425(a).

(3) If a Permittee requests approval to use a vapor processing system or monitor an operating parameter other than those specified in 40 CFR 63.427(a), the Permittee shall submit a description of planned reporting and record keeping procedures. The IDEM, OAQ, and the USEPA Administrator will specify appropriate reporting and record keeping requirements as part of the review of the permit application.

(c) To document compliance with Condition D.1.6 the Permittee shall maintain records of the presence of pilot flame for the Loading Rack Flare.

(d) All records shall be maintained in accordance with Section C - General Record Keeping Requirements, of this permit.

D.1.8 Reporting Requirements [40 CFR 63.428]

(a) An initial notification required for existing affected source under 40 CFR 63.9(b)(2) was submitted on July 17, 1998.

(b) The Permittee shall include in a semiannual report to the IDEM, OAQ, and the USEPA Administrator the following information, as applicable:

(1) Each loading of a gasoline cargo tank for which vapor tightness documentation had not been previously obtained by the gasoline distribution facility;

(c) The Permittee shall submit an excess emissions report to the IDEM, OAQ, and the USEPA Administrator in accordance with 40 CFR 63.10(e)(3), whether or not a CMS is installed at the gasoline distribution facility. The following occurrences are excess emissions events under this subpart, and the following information shall be included in the excess emissions report, as applicable:

1. Each exceedance or failure to maintain, as appropriate, the monitored operating parameter value determined under 40 CFR 63.425(b). The report shall include the monitoring data for the days on which exceedances or failures to maintain have occurred, and a description and timing of the steps taken to repair or perform maintenance on the vapor collection and processing systems or the CMS.

2. Each instance of a nonvapor-tight gasoline cargo tank loading at the gasoline distribution facility in which the Permittee failed to take steps to assure that such cargo tank would not be reloaded at the gasoline distribution facility before vapor tightness documentation for that cargo tank was obtained.

3. Each reloading of a nonvapor-tight gasoline cargo tank at the gasoline distribution facility before vapor tightness documentation for that cargo tank is obtained by the gasoline distribution facility in accordance with 40 CFR 63.422(c)(2).

(d) A reports, submitted to the IDEM, OAQ, shall be submitted to the addresses listed in Section C - General Reporting Requirements, of this permit, using the reporting forms located at the end of this permit.

SECTION D.2 **FACILITY OPERATION CONDITIONS**

Facility Description [326 IAC 2-7-5(15)]:

(s) One (1) CCR Platformer Unit which includes one (1) CCR Platformer Heater, identified as 300 - H1, H2, H3 with a maximum heat input rate of 70.3 mmBtu/hr, combusting refinery fuel gas, installed in 1992 and exhausting to stack 74; Under 40 CFR 63, Subpart UUU, process vents on the CCR are considered affected sources at a petroleum refinery.

(c) One (1) FCCU regenerator, identified as V-5 with an average throughput rate of 380 barrels fresh feed per hour, installed in 1950, controlled by a cyclone and exhausting to stack 10; Under 40 CFR 63, Subpart UUU, process vents on the FCCU are considered affected sources at a petroleum refinery.

(jj) One (1) Hydrotreating Unit Reactor charge heater (210-H-100), identified as 122, with a maximum heat input rating of 19.25 MMBtu per hour, combusting refinery fuel gas as a primary fuel and natural gas as a back up fuel, and exhausting through one (1) stack identified as 122 (to be constructed in 2005).

(kk) One (1) Hydrotreating Unit Reboiler Stabilizer (210-H-101), identified as 123, with a maximum heat input rating of 19.94 MMBtu per hour, combusting refinery fuel gas as a primary fuel and natural gas as a back up fuel, and exhausting through one (1) stack identified as 123 (to be constructed in 2005).

(ll) One (1) Tail Gas Treatment System and Sulfur Recovery System identified as 124 and consisting of the following: Under 40 CFR 63, Subpart UUU, these facilities and the associated process vents and bypass lines are considered affected sources at a petroleum refinery.

(1) One (1) Claus Unit Startup burner (520-H-101), identified as 124-1, with a maximum heat input rating of 1.54 MMBtu per hour, combusting natural gas, and exhausting through one (1) stack identified as 124-1 (to be constructed in 2005).

(2) One (1) Tail Gas Treating Unit (TGTU) Incinerator burner (520-H-101), identified as 124-2, with a maximum heat input rating of 1.29 MMBtu per hour, combusting refinery fuel gas as a primary fuel and natural as a back fuel, and exhausting through one (1) stack identified as 124-2 (to be constructed in 2005). In the event of unscheduled shutdown of the CCR unit, the Sulfur Recovery Unit effluent will be routed directly to the TGTU incinerator.

(3) One (1) Tail Gas Treating Unit (TGTU) Incinerator (520-H-162), identified as 124-3, with a maximum process flow rate of 48,000 dry standard cubic feet per day, and exhausting through one (1) stack identified as 124-3 (to be constructed in 2005).

(4) One (1) Sour Flare (520-H-163), identified as 124-4, with a maximum burner capacity of 0.92 MMBtu per hour, and a maximum process flow rate of 200 standard cubic feet per hour, and exhausting through one (1) stack identified as 124-4 (to be constructed in 2005).

(nn) One (1) Vacuum heater, identified as 200-H6, with a maximum heat input rate of 5.49 mmBtu/hr, combusting refinery fuel gas and natural gas as a backup, installed in 2005 and exhausting to stack 126.

(The information describing the process contained in this emissions unit description box is descriptive information and does not constitute enforceable conditions.)

Emission Limitations and Standards [326 IAC 2-7-5(1)]

D.2.1 General Provisions Relating to HAPs [326 IAC 12-1-1] [40 CFR Part 60, Subpart A]

The provisions of 40 CFR Part 60, Subpart A - General Provisions, which are incorporated as 326 IAC 12-1-1, apply to one (1) CCR platformer described in this section except when otherwise specified in 40 CFR Part 60, Subpart J.

D.2.2 General Provisions Relating to HAPs [326 IAC 20-1-1] [40 CFR Part 63, Subpart A]

(a) The provisions of 40 CFR Part 63, Subpart A - General Provisions, which are incorporated as 326 IAC 20-1-1, apply to the facilities described in this section except when otherwise specified in 40 CFR Part 63, Subpart UUU.

(b) The provisions of 40 CFR 63 Subpart A - General Provisions, which are incorporated as 326 IAC 20-1-1, apply to the affected sources, as designated by 40 CFR 63.7506(b). The Permittee must comply with these requirements on and after the effective date of 40 CFR 63, Subpart DDDDD.

D.2.3 Petroleum Refineries NSPS [326 IAC 12-1-1] [40 CFR 60, Subpart J]

The CCR Platformer Heater, Hydrotreater Unit Reactor Charge heater (122), Hydrotreater Unit Stabilizer Reboiler Heater (123), and Gas Treatment System & Sulfur Recovery System consisting of TGTU Incinerator Burner (124-2), Sour Flare (124-4), and Vacuum heater (200-H6) are subject to the New Source Performance Standard, 326 IAC 12, (40 CFR Part 60.100, Subpart J) "Standards of Performance for Petroleum Refineries," because the refinery fuel gas combustion devices commenced construction or modification after June 11, 1973.

D.2.4 Petroleum Refineries NESHAP [326 IAC 20-1-1] [40 CFR 63, Subpart UUU]

Pursuant to 40 CFR 63.1560, the one (1) existing catalytic cracking unit and one (1) catalytic reforming unit, known as FCCU regenerator and CCR Platformer Unit, respectively, and the new Sulfur Recovery Unit and TGTU, identified as 124, and the bypass lines serving these units are subject to the National Emission Standards for Hazardous Air Pollutants (NESHAP), 326 IAC 20-14, (40 CFR 63, Subpart UUU), with a compliance date of April 11, 2005 except as specified in 40 CFR 63.1563 paragraph (c).

The Permittee shall submit a notification of compliance options chosen no later than 180 days prior to the initial compliance date, which is April 11, 2005. The notification of compliance options chosen shall contain all the information required in 40 CFR 63.1570 through 63.1573 that is appropriate for the facility.

D.2.5 Standards for Sulfur Oxides Emissions from Fuel Gas Combustion Devices [40 CFR 60.104]

Pursuant to 40 CFR 60.104, the following shall apply to the CCR Platformer Heater, Hydrotreater Unit Reactor Charge heater (122), Hydrotreater Unit Stabilizer Reboiler Heater (123), Gas Treatment System & Sulfur Recovery System consisting of TGTU Incinerator Burner (124-2), and Vacuum heater (200-H6):

The Permittee that is subject to the requirements of this subpart shall comply with the emission limitations set forth in this section on and after the date on which the initial performance test, required by 60.8, is completed, but not later than 60 days after achieving the maximum production rate at which the affected facility will be operated, or 180 days after initial startup, whichever comes first.

No Permittee subject to the provisions of this subpart shall burn in any fuel gas combustion device any fuel gas that contains hydrogen sulfide (H_2S) in excess of 230 mg/dscm (0.10 gr/dscf). The combustion in a flare of process upset gases or fuel gas that is released to the flare as a result of relief valve leakage or other emergency malfunctions is exempt from this paragraph.

D.2.6 NESHAP for Industrial, Commercial, and Institutional Boilers and Process Heaters [326 IAC 20-1-1] [40 CFR Part 63, Subpart DDDDD]

Pursuant to 40 CFR 63.7490, the provisions of 40 CFR 63, Subpart DDDDD - National Emission Standards for Hazardous Air Pollutants for Industrial, Commercial, and Institutional Boilers and Process Heaters, apply to the Hydrotreater Unit Reactor Charge and Stabilizer Reboiler Heaters, identified as 122 and 123, respectively, because these are new facilities being constructed after

January 13, 2003 and meet the criteria in the definition in 40 CFR 63.7575 for the large gaseous fuel subcategory.

D.2.7 Standards for Metal HAP Emissions from Catalytic Cracking Units [40 CFR 63.1564]

(a) Pursuant to 40 CFR 63.1564, the following emission limitations and work practice standards shall apply to the FCCU regenerator:

(1) The Permittee shall comply with each applicable emission limitation in Table 1 of this subpart. This catalytic cracking unit is not subject to the NSPS for PM, therefore, the Permittee must choose a compliance option from the four options listed in 40 CFR 63.1564 paragraphs (a)(1)(i) through (iv).
(2) The Permittee shall comply with each applicable operating limit in Table 2 of this subpart.
(3) The Permittee shall prepare an operation, maintenance, and monitoring plan according to the requirements in 40 CFR 63.1574(f) and operate at all times according to the procedures in the plan.
(4) The applicable emission limitations and operating limits for metal HAP emissions from catalytic cracking units required in 40 CFR 63.1564 paragraphs (a)(1) and (2) do not apply during periods of planned maintenance preapproved by IDEM, OAQ according to the requirements in 40 CFR 63.1575(j).

(b) To demonstrate continuous compliance with the emission limitations and work practice standards, the Permittee shall:

(1) Demonstrate applicable continuous compliance with each applicable emission limitation in Tables 1 and 2 of this subpart according to the methods specified in Tables 6 and 7 of this subpart.
(2) Demonstrate continuous compliance with the work practice standard in 40 CFR 63.1564 paragraph (a)(3) by maintaining records to document conformance with the procedures in the operation, maintenance, and monitoring plan.
(3) If the Permittee uses a continuous opacity monitoring system and elects to comply with Option 3 listed in 40 CFR 63.1564 paragraph (a)(1)(iii), determine continuous compliance with your site-specific Ni operating limit by using Equation 11 in 40 CFR 63.1564.
(4) If the Permittee uses a continuous opacity monitoring system and elects to comply with Option 4 listed in 40 CFR 63.1564 paragraph (a)(1)(iv), determine continuous compliance with your site-specific Ni operating limit by using Equation 12 in 40 CFR 63.1564.

D.2.8 Standards for Organic HAP Emissions from Catalytic Cracking Units [40 CFR 63.1565]

(a) Pursuant to 40 CFR 63.1565, the following emission limitations and work practice standards shall apply to the FCCU regenerator:

(1) The Permittee shall comply with each applicable emission limitation in Table 8 of this subpart. This catalytic cracking unit is not subject to the NSPS for CO, therefore, the Permittee must choose a compliance option from the two options listed in 40 CFR 63.1564 paragraphs (a)(1)(i) through (ii).
(2) The Permittee shall comply with each applicable site-specific operating limit in Table 9 of this subpart.
(3) The Permittee shall prepare an operation, maintenance, and monitoring plan according to the requirements in 40 CFR 63.1574(f) and operate at all times according to the procedures in the plan.
(4) The emission limitations and operating limits for organic HAP emissions from catalytic cracking units required in 40 CFR 63.1565 paragraphs (a)(1) and (2) do not apply during periods of planned maintenance preapproved by IDEM, OAQ according to the requirements in 40 CFR 63.1575(j).

(b) To demonstrate continuous compliance with the emission limitations and work practice standards, the Permittee shall:

(1) Demonstrate applicable continuous compliance with each applicable emission limitation in Tables 8 and 9 of this subpart according to the methods specified in Tables 13 and 14 of this subpart.
(2) Demonstrate continuous compliance with the work practice standard in 40 CFR 63.1565 paragraph (a)(3) by complying with the procedures in the operation, maintenance, and monitoring plan.

D.2.9 Standards for Organic HAP Emissions from Catalytic Reforming Units [40 CFR 63.1566]

(a) Pursuant to 40 CFR 63.1566, the following emission limitations and work practice standards shall apply to the CCR Platformer unit:

(1) The Permittee shall comply with each applicable emission limitation in Table 15 of this subpart. The Permittee must choose from the two options listed in 40 CFR 63.1566 paragraphs (a)(1)(i) through (ii).
(2) The Permittee shall comply with each applicable site-specific operating limit in Table 16 of this subpart.
(3) The emission limitations in Tables 15 and 16 of this subpart apply to emissions from catalytic reforming unit process vents that occur during depressuring and purging operations. These process vents include those used during unit depressurization, purging, coke burn, catalyst rejuvenation, and reduction or activation purge.
(4) The emission limitations in Tables 15 and 16 of this subpart do not apply to emissions from process vents during depressuring and purging operations when the reactor vent pressure is 5 pounds per square inch gauge (psig) or less.
(5) The Permittee shall prepare an operation, maintenance, and monitoring plan according to the requirements in 40 CFR 63.1574(f) and operate at all times according to the procedures in the plan.

(b) To demonstrate continuous compliance with the emission limitations and work practice standards, the Permittee shall:

(1) Demonstrate applicable continuous compliance with each applicable emission limitation in Tables 15 and 16 of this subpart according to the methods specified in Tables 20 and 21 of this subpart.
(2) Demonstrate continuous compliance with the work practice standards in 40 CFR 63.1566 paragraph (a)(3) by complying with the procedures in the operation, maintenance, and monitoring plan.

D.2.10 Standards for Inorganic HAP Emissions from Catalytic Reforming Units [40 CFR 63.1567]

(a) Pursuant to 40 CFR 63.1567, the following emission limitations and work practice standards shall apply to the CCR Platformer:

(1) The Permittee shall comply with each applicable emission limitation in Table 22 of this subpart. These emission limitations apply during coke burn-off and catalyst rejuvenation. The Permittee must choose a compliance option from the two options listed in 40 CFR 63.1567 paragraphs (a)(1)(i) through (ii).
(2) The Permittee shall comply with each applicable site-specific operating limit in Table 23 of this subpart. These operating limits apply during coke burn-off and catalyst rejuvenation.
(3) The Permittee shall prepare an operation, maintenance, and monitoring plan according to the requirements in 40 CFR 63.1574(f) and operate at all times according to the procedures in the plan.

(b) To demonstrate continuous compliance with the emission limitations and work practice standard, the Permittee shall:

(1) Demonstrate applicable continuous compliance with each emission limitation in Tables 22 and 23 of this subpart according to the methods specified in Tables 27 and 28 of this subpart.

(2) Demonstrate continuous compliance with the work practice standard in 40 CFR 63.1567 paragraph (a)(3) by maintaining records to document conformance with the procedures in the operation, maintenance and monitoring plan.

D.2.11 Standards for HAP Emissions from Sulfur Recovery Units [40 CFR 63.1568] [326 IAC 20-50-1]

(a) Pursuant to 40 CFR 63.1568, the following emission limitations and work practice standards shall apply to the Sulfur Recovery Unit and TGTU:

(1) The Permittee shall comply with each applicable emission limitation in Table 29 of this subpart. The Sulfur Recovery Unit and TGTU are not subject to the NSPS for SO_2, therefore, the Permittee must choose from the options in paragraphs (a)(1)(i) through (ii) of 40 CFR 63.1568:
(i) The Permittee can elect to meet the NSPS requirements (Option 1); or
(ii) The Permittee can elect to meet the total reduced sulfur (TRS) emission limitation (Option 2).
(2) The Permittee shall comply with each operating limit in Table 30 of this subpart.
(3) The Permittee shall prepare an operation, maintenance, and monitoring plan according to the requirements in § 63.1574(f) and operate at all times according to the procedures in the plan.

(b) To demonstrate continuous compliance with the emission limitations and work practice standards, the Permittee shall:

(1) Demonstrate continuous compliance with each emission limitation in Tables 29 and 30 of this subpart that applies according to the methods specified in Tables 34 and 35 of this subpart.
(2) Demonstrate continuous compliance with the work practice standard in paragraph (a)(3) of this 40 CFR 633.1568 by complying with the procedures in the operation, maintenance, and monitoring plan.

D.2.12 Standards for HAP Emissions from Bypass Lines [40 CFR 63.1569] [326 IAC 20-50-1]

(a) Pursuant to 40 CFR 63.1569, the following emission limitations and work practice standards shall apply to the bypass lines:
(1) The Permittee shall meet each work practice standard in Table 36 of this subpart. The Permittee can choose from the four options in paragraphs (a)(1)(i) through (iv) of 40 CFR 63.1569:
(i) The Permittee can elect to install an automated system (Option 1);
(ii) The Permittee can elect to use a manual lock system (Option 2);
(iii) The Permittee can elect to seal the line (Option 3); or
(iv) The Permittee can elect to vent to a control device (Option 4).
(2) As provided in § 63.6(g), the EPA, may choose to grant permission to use an alternative to the work practice standard in paragraph (a)(1) of 40 CFR 63.1569.
(3) The Permittee must prepare an operation, maintenance, and monitoring plan according to the requirements in § 63.1574(f) and operate at all times according to the procedures in the plan.

(b) To demonstrate continuous compliance with the emission limitations and work practice standards, the Permittee shall:

(1) Demonstrate continuous compliance with each work practice standard in Table 36 of this subpart that applies according to the requirements in Table 39 of this subpart.
(2) Demonstrate continuous compliance with the work practice standard in paragraph (a)(2) of 40 CFR 63.1569 by complying with the procedures in the operation, maintenance, and monitoring plan.

D.2.13 Emission Limits and Work Practice Standards [326 IAC 20-1-1] [40 CFR Part 63, Subpart DDDDD]

Pursuant to 40 CFR 63.7500, the Permittee shall comply with the following requirements.

(a) The Permittee shall meet each emission limit and work practice standard in Table 1 of this subpart that applies to the boiler or process heater, except as provided under §63.7507.

(b) The Permittee must meet each operating limit in Tables 2 through 4 to this subpart that applies to the boiler or process heater. If the Permittee uses a control device or combination of control devices not covered in Tables 2 through 4 to this subpart, or wishes to establish and monitor an alternative operating limit and alternative monitoring parameters, the Permittee must apply to the United States Environmental Protection Agency (EPA) Administrator for approval of alternative monitoring under §63.8(f).

As provided in §63.6(g), EPA may approve use of an alternative to the work practice standards in this section.

D.2.14 Preventive Maintenance Plan [326 IAC 2-7-5(13)]

A Preventive Maintenance Plan, in accordance with Section B - Preventive Maintenance Plan, of this permit, is required for the CCR platformer heater, identified as 300 - H1, H2, H3, FCCU regenerator, identified as V-5, Hydrotreater Unit Reactor Charge heater (122), Hydrotreater Unit Stabilizer Reboiler Heater (123), and Gas Treatment System & Sulfur Recovery System consisting of TGTU Incinerator Burner (124-2)and any control devices.

Compliance Determination Requirements [326 IAC 2-1.1-11] [326 IAC 2-7-6(1)]

D.2.15 Performance Testing [40 CFR 60.106]

During the period between 60 and 180 days following the effective date of becoming subject to the rule 40 CFR 60.104, in order to demonstrate compliance with Condition D.2.5, the Permittee shall perform H_2S testing for the CCR Platformer Heater, Hydrotreater Unit Reactor Charge heater (122), Hydrotreater Unit Stabilizer Reboiler Heater (123), Gas Treatment System & Sulfur Recovery System consisting of TGTU Incinerator Burner (124-2), and Vacuum heater (200-H6) utilizing methods as approved by the Commissioner. Testing shall be conducted in accordance with Section C- Performance Testing.

Pursuant to 40 CFR 60.106, the following test methods and procedures shall apply to the refinery fuel gas combustion device:

(a) In conducting the performance tests required in 60.8, the Permittee shall use as reference methods and procedures the test methods in appendix A of this part or other methods and procedures as specified in this section, except as provided in 60.8(b).

(b) The Permittee shall determine compliance with the H_2S standard in 60.104(a)(1) as follows: Method 11 shall be used to determine the H_2S concentration. The gases entering the sampling train should be at about atmospheric pressure. If the pressure in the refinery fuel gas lines is relatively high, a flow control valve may be used to reduce the pressure. If the line pressure is high enough to operate the sampling train without a vacuum pump, the pump may be eliminated from the sampling train. The sample shall be drawn from a point near the centroid of the fuel gas line. The sampling time and sample volume shall be at least 10 minutes and 0.010 dscm (0.35 dscf). Two samples of equal sampling times shall be taken at about 1-hour intervals. The arithmetic average of these two samples shall constitute a run. For most fuel gases, sampling times exceeding 20 minutes may result in depletion of the collection solution, although fuel gases containing low concentrations of H_2S may necessitate sampling for longer periods of time.

D.2.16 Initial Compliance Demonstration [40 CFR 63.1564 - 1569] [326 IAC 20-50-1]

(a) The Permittee shall demonstrate initial compliance with the emission limitations and work practice standards for Metal HAP Emissions from Catalytic Cracking unit (FCCU) by:

(1) Installing, operating, and maintaining a continuous monitoring system(s) according to the requirements in 40 CFR 63.1572 and Table 3 of this subpart.

(2) Conducting a performance test for each catalytic cracking unit not subject to the NSPS for PM according to the requirements in 40 CFR 63.1571 and under the conditions specified in Table 4 of this subpart.
(3) Establishing each applicable site-specific operating limit in Table 2 of this subpart according to the procedures in Table 4 of this subpart.
(4) Using the procedures in 40 CFR 63.1564 paragraphs (b)(4)(i) through (iv) to determine initial compliance with the applicable emission limitations.

(b) The Permittee shall demonstrate initial compliance with the emission limitations and work practice standards for Organic HAP Emissions from Catalytic Cracking unit (FCCU) by:

(1) Installing, operating, and maintaining a continuous monitoring system according to the requirements in 40 CFR 63.1572 and Table 10 of this subpart. Except:
(i) Whether or not the catalytic cracking unit is subject to the NSPS for CO in 40 CFR 60.103, the Permittee does not have to install and operate a continuous emission monitoring system if the Permittee shows that CO emissions from the vent average less than 50 parts per million (ppm), dry basis. The Permittee shall get an exemption from IDEM, OAQ, based on the Permittee's written request. To show that the emissions average is less than 50 ppm (dry basis), the Permittee shall continuously monitor CO emissions for 30 days using a CO continuous emission monitoring system that meets the requirements in 40 CFR 63.1572.
(ii) If the catalytic cracking unit is not subject to the NSPS for CO, then the Permittee does not have to install and operate a continuous emission monitoring system or a continuous parameter monitoring system if the Permittee vents emissions to a boiler (including a "CO boiler") or process heater that has a design heat input capacity of at least 44 megawatts (MW).
(iii) If the catalytic cracking unit is not subject to the NSPS for CO, then the Permittee does not have to install and operate a continuous emission monitoring system or a continuous parameter monitoring system if the Permittee vents emissions to a boiler or process heater in which all vent streams are introduced into the flame zone.

(2) Conducting each performance test for a catalytic cracking unit not subject to the NSPS for CO according to the requirements in 40 CFR 63.1571 and under the conditions specified in Table 11 of this subpart.
(3) Establishing each applicable site-specific operating limit in Table 9 of this subpart according to the procedures in Table 11 of this subpart.
(4) Demonstrating initial compliance with each applicable emission limitation according to Table 12 of this subpart.
(5) Demonstrating initial compliance with the work practice standard in 40 CFR 63.1565 paragraph (a)(3) by submitting the operation, maintenance, and monitoring plan to IDEM, OAQ as part of the Notification of Compliance Status according to 40 CFR 63.1574.
(6) Submitting the Notification of Compliance Status containing the results of the initial compliance demonstration according to the requirements in 40 CFR 63.1574.

(c) The Permittee shall demonstrate initial compliance with the emission limitations and work practice standards for Organic HAP Emissions from Catalytic Reforming unit (CCR) by:
(1) Installing, operating, and maintaining a continuous monitoring system(s) according to the requirements in 40 CFR 63.1572 and Table 17 of this subpart.
(2) Conducting each performance test for a catalytic reforming unit according to the requirements in 40 CFR 63.1571 and under the conditions specified in Table 18 of this subpart.
(3) Establishing each applicable site-specific operating limit in Table 16 of this subpart according to the procedures in Table 18 of this subpart.
(4) Using the procedures in 40 CFR 60.1566 paragraph (b)(4)(i) or (ii) to determine initial compliance with the emission limitations.

(5) If the Permittee elects the 20 parts per million by volume (ppmv) concentration limit, correct the measured TOC concentration for oxygen (O2) content in the gas stream using Equation 4 in section 40 CFR 63.1566(b)(5).

(6) The Permittee is not required to do a TOC performance test if:

(i) elects to vent emissions to a flare as provided in 40 CFR 63.1566 paragraph (a)(1)(i) (Option 1); or

(ii) elects the TOC percent reduction or concentration limit in 40 CFR 63.1566 paragraph (a)(1)(ii) (Option 2), and uses a boiler or process heater with a design heat input capacity of 44 MW or greater or a boiler or process heater in which all vent streams are introduced into the flame zone.

(7) Demonstrating initial compliance with each applicable emission limitation according to Table 19 of this subpart.

(8) Demonstrating initial compliance with the work practice standard in 40 CFR 63.1566 paragraph (a)(5) by submitting the operation, maintenance, and monitoring plan to IDEM, OAQ as part of the Notification of Compliance Status.

(9) Submitting the Notification of Compliance Status containing the results of the initial compliance demonstration according to the requirements in 40 CFR 63.1574.

(d) The Permittee shall demonstrate initial compliance with the emission limitations and work practice standards for Inorganic HAP Emissions from Catalytic Reforming unit (CCR) by:

(1) Installing, operating, and maintaining a continuous monitoring system(s) according to the requirements in 40 CFR 63.1572 and Table 24 of this subpart.

(2) Conducting each performance test for a catalytic reforming unit according to the requirements in 40 CFR 63.1571 and the conditions specified in Table 25 of this subpart.

(3) Establishing each applicable site-specific operating limit in Table 23 of this subpart according to the procedures in Table 25 of this subpart.

(4) Demonstrating initial compliance with each applicable emission limitation according to Table 26 of this subpart.

(5) Demonstrating initial compliance with the work practice standard in 40 CFR 63.1567 paragraph (a)(3) by submitting the operation, maintenance, and monitoring plan to IDEM, OAQ as part of the Notification of Compliance Status.

(6) Submitting the Notification of Compliance Status containing the results of the initial compliance demonstration according to the requirements in 40 CFR 63.1574.

(e) To demonstrate initial compliance with the emission limitations and work practice standards for Sulfur Recovery Units, the Permittee shall:

(1) Install, operate, and maintain a continuous monitoring system according to the requirements in §63.1572 and Table 31 of this subpart.

(2) Conduct each performance test for a sulfur recovery unit not subject to the NSPS for sulfur oxides according to the requirements in § 63.1571 and under the conditions specified in Table 32 of this subpart.

(3) Establish each site-specific operating limit in Table 30 of this subpart that applies according to the procedures in Table 32 of this subpart.

(4) Correct the reduced sulfur samples to zero percent excess air using Equation 1 of 40 CFR 63.1568.

(5) Demonstrate initial compliance with each emission limitation that applies according to Table 33 of this subpart.

(6) Demonstrate initial compliance with the work practice standard in paragraph (a)(3) of 40 CFR 63.1568 by submitting the operation, maintenance, and monitoring plan to IDEM, OAQ as part of notification of compliance status.

(7) Submit the notification of compliance status containing the results of the initial compliance demonstration according to the requirements in § 63.1574.

(f) To demonstrate initial compliance with the emission limitations and work practice standards for Bypass Lines, the Permittee shall:

(1) If the Permittee elects the option in paragraph (a)(1)(i) of 40 CFR 63.1569, conduct each performance test for a bypass line according to the requirements in § 63.1571 and under the conditions specified in Table 37 of this subpart.

(2) Demonstrate initial compliance with each work practice standard in Table 36 of this subpart that applies according to Table 38 of this subpart.
(3) Demonstrate initial compliance with the work practice standard in paragraph (a)(3) of this 40 CFR 63.1569 by submitting the operation, maintenance, and monitoring plan to IDEM, OAQ as part of the notification of compliance status.
(4) Submit the notification of compliance status containing the results of the initial compliance demonstration according to the requirements in § 63.1574.

D.2.17 Performance Testing [40 CFR 63.1571]

(a) The Permittee shall conduct performance tests and report the results by no later than 150 days after the compliance date specified for the source in 40 CFR 63.1563 and according to the provisions in 40 CFR 63.7(a)(2). If the Permittee is required to do a performance evaluation or test for a semi-regenerative catalytic reforming unit catalyst regenerator vent, the Permittee may do them at the first regeneration cycle after the source's compliance date and report the results in a follow-up Notification of Compliance Status report due no later than 150 days after the test.
(1) For each emission limitation or work practice standard where initial compliance is not demonstrated using a performance test, opacity observation, or visible emission observation, the Permittee shall conduct the initial compliance demonstration within 30 calendar days after the compliance date that is specified for the source in 40 CFR 63.1563.
(2) For each emission limitation where the averaging period is 30 days, the 30-day period for demonstrating initial compliance begins at 12:00 a.m. on the compliance date that is specified for the source in 40 CFR 63.1563 and ends at 11:59 p.m., 30 calendar days after the compliance date that is specified for the source in 40 CFR 63.1563.

(b) The Permittee shall:
(1) Conduct each performance test according to the requirements in 40 CFR 63.7(e)(1).
(2) Except for opacity and visible emission observations, conduct three separate test runs for each performance test as specified in 40 CFR 63.7(e)(3). Each test run must last at least 1 hour.
(3) Conduct each performance evaluation according to the requirements in 40 CFR 63.8(e).
(4) Not conduct performance tests during periods of startup, shutdown, or malfunction, as specified in 40 CFR 63.7(e)(1).
(5) Calculate the average emission rate for the performance test by calculating the emission rate for each individual test run in the units of the applicable emission limitation using Equation 2, 5, or 8 of 40 CFR 63.1564, and determining the arithmetic average of the calculated emission rates.

(c) The Permittee may choose to use an engineering assessment to calculate the process vent flow rate, net heating value, TOC emission rate, and total organic HAP emission rate expected to yield the highest daily emission rate when determining the emission reduction or outlet concentration for the organic HAP standard for catalytic reforming units. If the Permittee uses an engineering assessment, the Permittee shall document all data, assumptions, and procedures to the satisfaction of IDEM, OAQ. An engineering assessment may include the approaches listed in 40 CFR 63.1571 paragraphs (c)(1) through (c)(4). Other engineering assessments may be used but are subject to review and approval by IDEM, OAQ.

(1) The Permittee may use previous test results provided the tests are representative of current operating practices at the process unit, and provided EPA methods or approved alternatives were used;
(2) the Permittee may use bench-scale or pilot-scale test data representative of the process under representative operating conditions;

(3) the Permittee may use maximum flow rate, TOC emission rate, organic HAP emission rate, or organic HAP or TOC concentration specified or implied within a permit limit applicable to the process vent; or

(4) the Permittee may use design analysis based on engineering principles, measurable process parameters, or physical or chemical laws or properties. Examples of analytical methods include, but are not limited to:

(i) Use of material balances based on process stoichiometry to estimate maximum TOC concentrations;

(ii) Calculation of hourly average maximum flow rate based on physical equipment design such as pump or blower capacities; and

(iii) Calculation of TOC concentrations based on saturation conditions.

(d) If the Permittee does a performance test to demonstrate compliance, then the Permittee shall base the process or control device operating limits for continuous parameter monitoring systems on the results measured during the performance test. The Permittee may adjust the values measured during the performance test according to the criteria in paragraphs (d)(1) through (3) of 40 CFR 63.1571

D.2.18 Testing, Fuel Analyses, and Initial Compliance Requirements [40 CFR 63.7510] [40 CFR 63.7515] [40 CFR 63.7520]

Pursuant to 40 CFR 63.7510, the Permittee shall comply with the following initial compliance requirements:

(a) For affected sources that elect to demonstrate compliance with any of the emission limits of this subpart through performance testing, the initial compliance requirements include conducting performance tests according to §63.7520 and Table 5 to this subpart, conducting a fuel analysis for each type of fuel burned in the boiler or process heater according to §63.7521 and Table 6 of this subpart, establishing operating limits according to §63.7530 and Table 7 of this subpart, and conducting CMS performance evaluations according to §63.7525.

(b) For affected sources that elect to demonstrate compliance with the emission limits for HCl, mercury, or TSM through fuel analysis, the initial compliance requirement is to conduct a fuel analysis for each type of fuel burned in the boiler or process heater according to §63.7521 and Table 6 to this subpart and establish operating limits according to §63.7530 and Table 8 to this subpart.

(c) For affected sources that have an applicable work practice standard, the initial compliance requirements depend on the subcategory and rated capacity of the boiler or process heater. If the boiler or process heater is in any of the limited use subcategories or has a heat input capacity less than 100 MMBtu per hour, then the initial compliance demonstration is conducting a performance test for carbon monoxide according to Table 5 to this subpart. If the boiler or process heater is in any of the large subcategories and has a heat input capacity of 100 MMBtu per hour or greater, then the initial compliance demonstration is conducting a performance evaluation of the continuous emission monitoring system for carbon monoxide according to §63.7525(a).

(d) For existing affected sources, the Permittee must demonstrate initial compliance no later than 180 days after the compliance date that is specified for the source in §63.7495 and according to the applicable provisions in §63.7(a)(2) as cited in Table 10 to this subpart.

(e) If the new or reconstructed affected source commenced construction or reconstruction between January 13, 2003 and September 13, 2004, then the Permittee must demonstrate initial compliance with either the proposed emission limits and work practice standards or the promulgated emission limits and work practice standards no later than 180 days after September 13, 2004 or within 180 days after startup of the source, whichever is later, according to §63.7(a)(2)(ix).

(f) If the new or reconstructed affected source commenced construction or reconstruction between January 13, 2003, and September 13, 2004, and the Permittee chooses to comply with the proposed emission limits and work practice standards when demonstrating initial compliance, the Permittee must conduct a second compliance demonstration for the promulgated emission limits and work practice standards within 3 years after September 13, 2004 or within 3 years after startup of the affected source, whichever is later.

(g) If the new or reconstructed affected source commences construction or reconstruction after September 13, 2004, then the Permittee must demonstrate initial compliance with the promulgated emission limits and work practice standards no later than 180 days after startup of the source.

Pursuant to 40 CFR 63.7510, the Permittee shall comply with the following performance test requirements:

(a) The Permittee must conduct all applicable performance tests according to §63.7520 on an annual basis, unless the Permittee follows the requirements listed in paragraphs (b) through (d) of 40 CFR 63.7510. Annual performance tests must be completed between 10 and 12 months after the previous performance test, unless the Permittee follows the requirements listed in paragraphs (b) through (d) of 40 CFR 63.7510.

(b) The Permittee can conduct performance tests less often for a given pollutant if the performance tests for the pollutant (particulate matter, HCl, mercury, or TSM) for at least 3 consecutive years show that the Permittee complies with the emission limit. In this case, the Permittee does not have to conduct a performance test for that pollutant for the next 2 years. The Permittee must conduct a performance test during the third year and no more than 36 months after the previous performance test.

(c) If the boiler or process heater continues to meet the emission limit for particulate matter, HCl, mercury, or TSM, the Permittee may choose to conduct performance tests for these pollutants every third year, but each such performance test must be conducted no more than 36 months after the previous performance test.

(d) If a performance test shows noncompliance with an emission limit for particulate matter, HCl, mercury, or TSM, the Permittee must conduct annual performance tests for that pollutant until all performance tests over a consecutive 3-year period show compliance.

(e) If the Permittee has an applicable work practice standard for carbon monoxide and the boiler or process heater is in any of the limited use subcategories or has a heat input capacity less than 100 MMBtu per hour, the Permittee must conduct annual performance tests for carbon monoxide according to §63.7520. Each annual performance test must be conducted between 10 and 12 months after the previous performance test.

(f) The Permittee must conduct a fuel analysis according to §63.7521 for each type of fuel burned no later than 5 years after the previous fuel analysis for each fuel type. If the Permittee burns a new type of fuel, then the Permittee must conduct a fuel analysis before burning the new type of fuel in the boiler or process heater. The Permittee must still meet all applicable continuous compliance requirements in §63.7540.

(g) The Permittee must report the results of performance tests and fuel analyses within 60 days after the completion of the performance tests or fuel analyses. This report should also verify that the operating limits for the affected source have not changed or provide documentation of revised operating parameters established according to §63.7530 and Table 7 to this subpart, as applicable. The reports for all subsequent performance tests and fuel analyses should include all applicable information required in §63.7550.

Pursuant to 40 CFR 63.7520, the Permittee is subject to the following performance test procedures:

(a) The Permittee must conduct all performance tests according to §63.7(c), (d), (f), and (h). The Permittee must also develop a site-specific test plan according to the requirements in §63.7(c) if the Permittee elects to demonstrate compliance through performance testing.

(b) The Permittee must conduct each performance test according to the requirements in Table 5 to this subpart.

(c) New or reconstructed boilers or process heaters in one of the liquid fuel subcategories that burn only fossil fuels and other gases and do not burn any residual oil must demonstrate compliance according to §63.7506(a).

(d) The Permittee must conduct each performance test under the specific conditions listed in Tables 5 and 7 to this subpart. The Permittee must conduct performance tests at the maximum normal operating load while burning the type of fuel or mixture of fuels that have the highest content of chlorine, mercury, and total selected metals, and the Permittee must demonstrate initial compliance and establish the operating limits based on these tests. These requirements could result in the need to conduct more than one performance test.

(e) The Permittee may not conduct performance tests during periods of startup, shutdown, or malfunction.

(f) The Permittee must conduct three separate test runs for each performance test required in 40 CFR 63.7520, as specified in §63.7(e)(3). Each test run must last at least 1 hour.

(g) To determine compliance with the emission limits, the Permittee must use the F-Factor methodology and equations in sections 12.2 and 12.3 of EPA Method 19 of appendix A to part 60 of this chapter to convert the measured particulate matter concentrations, the measured HCl concentrations, the measured TSM concentrations, and the measured mercury concentrations that result from the initial performance test to pounds per million Btu heat input emission rates using F-factors.

Compliance Monitoring Requirements [326 IAC 2-7-6(1)] [326 IAC 2-7-5(1)]

D.2.19 Continuous Monitoring [40 CFR 60.105]

(a) Pursuant to 40 CFR 60.105, the CCR Platformer Heater, identified as 300 - H1, H2, H3, has applicable compliance monitoring conditions as specified below:

Pursuant to a September 16, 1984 letter from the USEPA, an Alternative monitoring plan was approved with the following conditions.

(1) The fuel gas must be sampled every 8 hours during the unit's operation at the representative location and analyze the H2S concentration using three Draeger tubes with a span of 0-15 parts per million (ppm) for each sampling effort.
(2) Average the Draeger tube readings for each sampling event.
(3) If the results H2S concentrations exceed 10 ppm, within 1 hour begin performing H_2S sampling and analysis every hour using three Draeger tubes with a span of 0-200 ppm.
(4) When 3 consecutive hours of sampling with the 200 ppm Draeger tubes indicate that the H2S concentration is below 10 ppm, revert to using the 15 ppm Draeger tubes every 8 hours.
(5) If the H2S ever exceeds 80 ppm, install and certify an H2S CEM within 180 days and, in the meantime, follow this approved alternative monitoring method.
(6) Submit quarterly summary reports indicating all instances when the H2S concentration exceeded 10 ppm, the actual H2S concentration, and times when the unit was not operational.
(7) Maintain records of the Draeger tube results used to prepare the quarterly reports on file for at least 2 years.

(b) Pursuant to 40 CFR 60.105, the Hydrotreater Unit Reactor Charge heater (122), Hydrotreater Unit Stabilizer Reboiler Heater (123), Gas Treatment System & Sulfur

Recovery System consisting of TGTU Incinerator Burner (124-2), and Vaccum heater (200-H6) have applicable compliance monitoring conditions as specified below:

(1) Continuous monitoring systems shall be installed, calibrated, maintained, and operated by the owner or operator subject to the provisions of this subpart as follows:

(a) For fuel gas combustion devices subject to 40 CFR 60.104(a)(1), an instrument for continuously monitoring and recording the concentration by volume (dry basis, zero percent excess air) of SO_2 emissions into the atmosphere (except where an H_2S monitor is installed under paragraph (a)(4) of 40 CFR 60.105. The monitor shall include an oxygen monitor for correcting the data for excess air.

(i) The span values for this monitor are 50 ppm SO2 and 25 percent oxygen (O2).

(ii) The SO2 monitoring level equivalent to the H2S standard under 40 CFR 60.104(a)(1) shall be 20 ppm (dry basis, zero percent excess air).

(iii) The performance evaluations for this SO2 monitor under Sec. 60.13(c) shall use Performance Specification 2. Methods 6 or 6C and 3 or 3A shall be used for conducting the relative accuracy evaluations. Method 6 samples shall be taken at a flow rate of approximately 2 liters/min for at least 30 minutes. The relative accuracy limit shall be 20 percent or 4 ppm, whichever is greater, and the calibration drift limit shall be 5 percent of the established span value.

(iv) Fuel gas combustion devices having a common source of fuel gas may be monitored at only one location (i.e., after one of the combustion devices), if monitoring at this location accurately represents the SO2 emissions into the atmosphere from each of the combustion devices.

(b) In place of the SO_2 monitor in paragraph (a)(3) of 40 CFR 60.105, an instrument for continuously monitoring and recording the concentration (dry basis) of H2S in fuel gases before being burned in any fuel gas combustion device.

(i) The span value for this instrument is 425 mg/dscm H2S.

(ii) Fuel gas combustion devices having a common source of fuel gas may be monitored at only one location, if monitoring at this location accurately represents the concentration of H2S in the fuel gas being burned.

(iii) The performance evaluations for this H2S monitor under Sec. 60.13(c) shall use Performance Specification 7. Method 11, 15, 15A, or 16 shall be used for conducting the relative accuracy evaluations.

(c) For Claus sulfur recovery plants with oxidation control systems or reduction control systems followed by incineration subject to 40 CFR 60.104(a)(2)(i), an instrument for continuously monitoring and recording the concentration (dry basis, zero percent excess air) of SO2 emissions into the atmosphere. The monitor shall include an oxygen monitor for correcting the data for excess air.

(i) The span values for this monitor are 500 ppm O2 and 25 percent O2.

(ii) The performance evaluations for this SO2 monitor under Sec. 60.13(c) shall use Performance Specification 2. Methods 6 or 6C and 3 or 3A shall be used for conducting the relative accuracy evaluations.

(d) The continuous monitoring systems under paragraphs (a)(8), (a)(9), and (a)(10) of 40 CFR 60.105 are operated and data recorded during all periods of operation of the affected facility including periods of startup, shutdown, or malfunction, except for continuous monitoring system breakdowns, repairs, calibration checks, and zero and span adjustments.

(e) The Permittee shall use the following procedures to evaluate the continuous monitoring systems under paragraphs (a)(8), (a)(9), and (a)(10) of 40 CFR 60.105.

(i) Method 3 or 3A and Method 6 or 6C for the relative accuracy evaluations under the 40 CFR 60.13(e) performance evaluation.

(ii) Appendix F, Procedure 1, including quarterly accuracy determinations and daily calibration drift tests.

D.2.20 General Compliance Requirements [40 CFR 63.1570] [326 IAC 20-50-1]

(a) The Permittee shall comply with all of the non-opacity standards in 40 CFR Part 63 during the times specified in 40 CFR 63.6(f)(1).

(b) The Permittee shall comply with the opacity and visible emission limits in this subpart during the times specified in 40 CFR 63.6(h)(1).

(c) The Permittee shall always operate and maintain the affected source, including air pollution control and monitoring equipment, according to the provisions in 40 CFR 63.6(e)(1)(i). During the period between the compliance date specified for the affected source and the date upon which continuous monitoring systems have been installed and validated and any applicable operating limits have been set, the Permittee shall maintain a log detailing the operation and maintenance of the process and emissions control equipment.

(d) The Permittee shall develop and implement a written startup, shutdown, and malfunction plan (SSMP) according to the provisions in 40 CFR 63.6(e)(3).

(e) During periods of startup, shutdown, and malfunction, the Permittee shall operate in accordance with the SSMP.

(f) The Permittee shall report each instance in which the Permittee did not meet each emission limitation and each applicable operating limit in this subpart. This includes periods of startup, shutdown, and malfunction. The Permittee also shall report each instance in which the Permittee did not meet the applicable work practice standards in this subpart. These instances are deviations from the emission limitations and work practice standards in this subpart. These deviations must be reported according to the requirements in 40 CFR 63.1575.

(g) Consistent with 40 CFR 63.6(e) and 63.7(e)(1), deviations that occur during a period of startup, shutdown, or malfunction are not violations if the Permittee demonstrates to IDEM, OAQ's satisfaction that the Permittee was operating in accordance with the SSMP. The SSMP must require that good air pollution control practices are used during those periods. The plan must also include elements designed to minimize the frequency of such periods (i.e., root cause analysis). IDEM, OAQ will determine whether deviations that occur during a period of startup, shutdown, or malfunction are violations, according to the provisions in 40 CFR 63.6(e) and the contents of the SSMP.

D.2.21 Monitoring Installation, Operation, and Maintenance Requirements [40 CFR 63.1572] [326 IAC 20-50-1]

(a) The Permittee shall install, operate, and maintain each continuous emission monitoring system according to the requirements in 40 CFR 63.1572 paragraphs (a)(1) through (4).

(1) The Permittee shall install, operate, and maintain each continuous emission monitoring system according to the requirements in Table 40 of this subpart.

(2) If the Permittee uses a continuous emission monitoring system to meet the NSPS CO or SO2 limit, then the Permittee shall conduct a performance evaluation of each continuous emission monitoring system according to the requirements in 40 CFR 63.8 and Table 40 of this subpart. This requirement does not apply to an affected source subject to the NSPS that has already demonstrated initial compliance with the applicable performance specification.

(3) As specified in 40 CFR 63.8(c)(4)(ii), each continuous emission monitoring system must complete a minimum of one cycle of operation (sampling, analyzing, and data recording) for each successive 15-minute period.

(4) Data must be reduced as specified in 40 CFR 63.8(g)(2).

(b) The Permittee shall install, operate, and maintain each continuous opacity monitoring system according to the requirements in 40 CFR 63.1572 paragraphs (b)(1) through (3).

(1) Each continuous opacity monitoring system must be installed, operated, and maintained according to the requirements in Table 40 of this subpart.

(2) If the Permittee uses a continuous opacity monitoring system to meet the NSPS opacity limit, then the Permittee shall conduct a performance evaluation of each continuous opacity monitoring system according to the requirements in 40 CFR 63.8 and Table 40 of this subpart. This requirement does not apply to an affected source subject to the NSPS that has already demonstrated initial compliance with the applicable performance specification.

(3) As specified in 40 CFR 63.8(c)(4)(i), each continuous opacity monitoring system must complete a minimum of one cycle of sampling and analyzing for each successive 10-second period and one cycle of data recording for each successive 6-minute period.

(c) The Permittee shall install, operate, and maintain each continuous parameter monitoring system according to the requirements in 40 CFR 63.1572 paragraphs (c)(1) through (7).

(1) Each continuous parameter monitoring system must be installed, operated, and maintained according to the requirements in Table 41 of this subpart and in a manner consistent with the manufacturer's specifications or other written procedures that provide adequate assurance that the equipment will monitor accurately.

(2) The continuous parameter monitoring system must complete a minimum of one cycle of operation for each successive 15-minute period. The Permittee shall have a minimum of four successive cycles of operation to have a valid hour of data (or at least two if a calibration check is performed during that hour or if the continuous parameter monitoring system is out-of-control).

(3) Each continuous parameter monitoring system must have valid hourly average data from at least 75 percent of the hours during which the process operated.

(4) Each continuous parameter monitoring system must determine and record the hourly average of all recorded readings and if applicable, the daily average of all recorded readings for each operating day. The daily average must cover a 24-hour period if operation is continuous or the number of hours of operation per day if operation is not continuous.

(5) Each continuous parameter monitoring system must record the results of each inspection, calibration, and validation check.

(d) The Permittee shall monitor and collect data according to the requirements in 40 CFR 63.1572 paragraphs (d)(1) and (2).

(1) Except for monitoring malfunctions, associated repairs, and required quality assurance or control activities (including as applicable, calibration checks and required zero and span adjustments), the Permittee shall conduct all monitoring in continuous operation (or collect data at all required intervals) at all times the affected source is operating.

(2) The Permittee may not use data recorded during monitoring malfunctions, associated repairs, and required quality assurance or control activities for purposes

of this regulation, including data averages and calculations, for fulfilling a minimum data availability requirement, if applicable. The Permittee shall use all the data collected during all other periods in assessing the operation of the control device and associated control system.

D.2.22 General Compliance Requirements [40 CFR 63.7505]

Pursuant to 40 CFR 63.7505, the Permittee shall comply with the following requirements:

(a) The Permittee shall be in compliance with the emission limits (including operating limits) and the work practice standards in this subpart at all times, except during periods of startup, shutdown, and malfunction.

(b) The Permittee shall always operate and maintain the affected source, including air pollution control and monitoring equipment, according to the revisions in §63.6(e)(1)(i).

(c) The Permittee can demonstrate compliance with any applicable emission limit using fuel analysis if the emission rate calculated according to §63.7530(d) is less than the applicable emission limit. Otherwise, The Permittee must demonstrate compliance using performance testing.

(d) If the Permittee demonstrate compliance with any applicable emission limit through performance testing, the Permittee must develop a site-specific monitoring plan according to the requirements in paragraphs (d)(1) through (4) of 40 CFR 63.7505. This requirement also applies if the Permittee petitions the EPA Administrator for alternative monitoring parameters under §63.8(f).

(1) For each continuous monitoring system (CMS) required in 40 CFR 63.7505, the Permittee must develop and submit to the EPA Administrator for approval a site-specific monitoring plan that addresses paragraphs (d)(1)(i) through (iii) of 40 CFR 63.7505. The Permittee must submit this site-specific monitoring plan at least 60 days before initial performance evaluation of the CMS.

(i) Installation of the CMS sampling probe or other interface at a measurement location relative to each affected process unit such that the measurement is representative of control of the exhaust emissions (e.g., on or downstream of the last control device);
(ii) Performance and equipment specifications for the sample interface, the pollutant concentration or parametric signal analyzer, and the data collection and reduction systems; and
(iii) Performance evaluation procedures and acceptance criteria (e.g., calibrations).

(2) In the site-specific monitoring plan, the Permittee must also address paragraphs (d)(2)(i) through (iii) of this 40 CFR 63.7505.
(i) Ongoing operation and maintenance procedures in accordance with the general requirements of §63.8(c)(1), (3), and (4)(ii);
(ii) Ongoing data quality assurance procedures in accordance with the general requirements of §63.8(d); and
(iii) Ongoing recordkeeping and reporting procedures in accordance with the general requirements of §63.10(c), (e)(1), and (e)(2)(i).

(3) The Permittee shall conduct a performance evaluation of each CMS in accordance with the site-specific monitoring plan.
(4) The Permittee shall operate and maintain the CMS in continuous operation according to the site-specific monitoring plan.

(e) If the Permittee has an applicable emission limit or work practice standard, the Permittee must develop and implement a written startup, shutdown, and malfunction plan (SSMP) according to the provisions in §63.6(e)(3).

D.2.23 Monitoring, Installation, Operation, and Maintenance Requirements [40 CFR 63.7525]

Pursuant to 40 CFR 63.7525, the Permittee shall comply with the following requirements:

(a) If the Permittee has an applicable work practice standard for carbon monoxide, and the boiler or process heater is in any of the large subcategories and has a heat input capacity of 100 MMBtu per hour or greater, then the Permittee must install, operate, and maintain a continuous emission monitoring system (CEMS) for carbon monoxide according to the procedures in paragraphs (a)(1) through (6) of 40 CFR 63.7525 by the compliance date specified in §63.7495.

(1) Each CEMS must be installed, operated, and maintained according to Performance Specification (PS) 4A of 40 CFR part 60, appendix B, and according to the site-specific monitoring plan developed according to §63.7505(d).
(2) The Permittee must conduct a performance evaluation of each CEMS according to the requirements in §63.8 and according to PS 4A of 40 CFR part 60, appendix B.
(3) Each CEMS must complete a minimum of one cycle of operation (sampling, analyzing, and data recording) for each successive 15-minute period.
(4) The CEMS data must be reduced as specified in §63.8(g)(2).
(5) The Permittee must calculate and record a 30-day rolling average emission rate on a daily basis. A new 30-day rolling average emission rate is calculated as the average of all of the hourly CO emission data for the preceding 30 operating days.
(6) For purposes of calculating data averages, the Permittee must not use data recorded during periods of monitoring malfunctions, associated repairs, out-of-control periods, required quality assurance or control activities, or when the boiler or process heater is operating at less than 50 percent of its rated capacity. The Permittee must use all the data collected during all other periods in assessing compliance. Any period for which the monitoring system is out of control and data are not available for required calculations constitute a deviation from the monitoring requirements.

(b) If the Permittee has an applicable opacity operating limit, then the Permittee must install, operate, certify and maintain each continuous opacity monitoring system (COMS) according to the procedures in paragraphs (b)(1) through (7) of 40 CFR 63.7525 by the compliance date specified in §63.7495.

(1) Each COMS must be installed, operated, and maintained according to PS 1 of 40 CFR part 60, appendix B.
(2) The Permittee must conduct a performance evaluation of each COMS according to the requirements in §63.8 and according to PS 1 of 40 CFR part 60, appendix B.
(3) As specified in §63.8(c)(4)(i), each COMS must complete a minimum of one cycle of sampling and analyzing for each successive 10-second period and one cycle of data recording for each successive 6-minute period.
(4) The COMS data must be reduced as specified in §63.8(g)(2).
(5) The Permittee must include in the site-specific monitoring plan procedures and acceptance criteria for operating and maintaining each COMS according to the requirements in §63.8(d). At a minimum, the monitoring plan must include a daily calibration drift assessment, a quarterly performance audit, and an annual zero alignment audit of each COMS.
(6) The Permittee must operate and maintain each COMS according to the requirements in the monitoring plan and the requirements of §63.8(e). Identify periods the COMS is out of control including any periods that the COMS fails to pass a daily calibration drift assessment, a quarterly performance audit, or an annual zero alignment audit.
(7) The Permittee must determine and record all the 6-minute averages (and 1-hour block averages as applicable) collected for periods during which the COMS is not out of control.

(c) If the Permittee has an operating limit that requires the use of a CMS, then the Permittee must install, operate, and maintain each continuous parameter monitoring system (CPMS)

according to the procedures in paragraphs (c)(1) through (5) of 40 CFR 63.7525 by the compliance date specified in §63.7495.

(1) The CPMS must complete a minimum of one cycle of operation for each successive 15-minute period. The Permittee must have a minimum of four successive cycles of operation to have a valid hour of data.
(2) Except for monitoring malfunctions, associated repairs, and required quality assurance or control activities (including, as applicable, calibration checks and required zero and span adjustments), the Permittee must conduct all monitoring in continuous operation at all times that the unit is operating. A monitoring malfunction is any sudden, infrequent, not reasonably preventable failure of the monitoring to provide valid data. Monitoring failures that are caused in part by poor maintenance or careless operation are not malfunctions.
(3) For purposes of calculating data averages, the Permittee must not use data recorded during monitoring malfunctions, associated repairs, out of control periods, or required quality assurance or control activities. The Permittee must use all the data collected during all other periods in assessing compliance. Any period for which the monitoring system is out-of-control and data are not available for required calculations constitutes a deviation from the monitoring requirements.
(4) Determine the 3-hour block average of all recorded readings, except as provided in paragraph (c)(3) of 40 CFR 63.7525.
(5) Record the results of each inspection, calibration, and validation check.

(d) If the Permittee has an operating limit that requires the use of a flow measurement device, then the Permittee must meet the requirements in paragraphs (c) and (d)(1) through (4) of 40 CFR 63.7525.

(1) Locate the flow sensor and other necessary equipment in a position that provides a representative flow.
(2) Use a flow sensor with a measurement sensitivity of 2 percent of the flow rate.
(3) Reduce swirling flow or abnormal velocity distributions due to upstream and downstream disturbances.
(4) Conduct a flow sensor calibration check at least semiannually.

(e) If the Permittee has an operating limit that requires the use of a pressure measurement device, then the Permittee must meet the requirements in paragraphs (c) and (e)(1) through (6) of 40 CFR 63.7525.
(1) Locate the pressure sensor(s) in a position that provides a representative measurement of the pressure.
(2) Minimize or eliminate pulsating pressure, vibration, and internal and external corrosion.
(3) Use a gauge with a minimum tolerance of 1.27 centimeters of water or a transducer with a minimum tolerance of 1 percent of the pressure range.
(4) Check pressure tap pluggage daily.
(5) Using a manometer, check gauge calibration quarterly and transducer calibration monthly.
(6) Conduct calibration checks any time the sensor exceeds the manufacturer's specified maximum operating pressure range or install a new pressure sensor.

(f) If the Permittee has an operating limit that requires the use of a pH measurement device, then the Permittee must meet the requirements in paragraphs (c) and (f)(1) through (3) of this 40 CFR 63.7525.

(1) Locate the pH sensor in a position that provides a representative measurement of scrubber effluent pH.
(2) Ensure the sample is properly mixed and representative of the fluid to be measured.
(3) Check the pH meter's calibration on at least two points every 8 hours of process operation.

(g) If the Permittee has an operating limit that requires the use of equipment to monitor voltage and secondary current (or total power input) of an electrostatic precipitator (ESP), then the Permittee must use voltage and secondary current monitoring equipment to measure voltage and secondary current to the ESP.

(h) If the Permittee has an operating limit that requires the use of equipment to monitor sorbent injection rate (e.g., weigh belt, weigh hopper, or hopper flow measurement device), then the Permittee must meet the requirements in paragraphs (c) and (h)(1) through (3) of 40 CFR 63.7525.

(1) Locate the device in a position(s) that provides a representative measurement of the total sorbent injection rate.
(2) Install and calibrate the device in accordance with manufacturer's procedures and specifications.
(3) At least annually, calibrate the device in accordance with the manufacturer's procedures and specifications.

(i) If the Permittee elects to use a fabric filter bag leak detection system to comply with the requirements of this subpart, then the Permittee must install, calibrate, maintain, and continuously operate a bag leak detection system as specified in paragraphs (i)(1) through (8) of 40 CFR 63.7525.

(1) The Permittee must install and operate a bag leak detection system for each exhaust stack of the fabric filter.
(2) Each bag leak detection system must be installed, operated, calibrated, and maintained in a manner consistent with the manufacturer's written specifications and recommendations and in accordance with the guidance provided in EPA-454/R-98-015, September 1997.
(3) The bag leak detection system must be certified by the manufacturer to be capable of detecting particulate matter emissions at concentrations of 10 milligrams per actual cubic meter or less.
(4) The bag leak detection system sensor must provide output of relative or absolute particulate matter loadings.
(5) The bag leak detection system must be equipped with a device to continuously record the output signal from the sensor.
(6) The bag leak detection system must be equipped with an alarm system that will sound automatically when an increase in relative particulate matter emissions over a preset level is detected. The alarm must be located where it is easily heard by plant operating personnel.
(7) For positive pressure fabric filter systems that do not duct all compartments of cells to a common stack, a bag leak detection system must be installed in each baghouse compartment or cell.
(8) Where multiple bag leak detectors are required, the system's instrumentation and alarm may be shared among detectors.

D.2.24 Initial Compliance with the Emission Limits and Work Practice Standards [40 CFR 63.7530]

Pursuant to 40 CFR 63.7530, the Permittee shall comply with the following requirements:

(a) The Permittee must demonstrate initial compliance with each emission limit and work practice standard that applies to Permittee by either conducting initial performance tests and establishing operating limits, as applicable, according to §63.7520, paragraph (c) of 40 CFR 63.7530, and Tables 5, 7 and 8 to this subpart OR conducting initial fuel analyses to determine emission rates and establishing operating limits, as applicable, according to §63.7521, paragraph (d) of 40 CFR 63.7530, and Tables 6 and 8 to this subpart.

(b) New or reconstructed boilers or process heaters in one of the liquid fuel subcategories that burn only fossil fuels and other gases and do not burn any residual oil must demonstrate compliance according to §63.7506(a).

(c) If the Permittee demonstrates compliance through performance testing, then the Permittee must establish each site-specific operating limit in Tables 2 through 4 to this subpart that applies to the Permittee according to the requirements in §63.7520, Table 7 to this subpart, and paragraph (c)(4) of 40 CFR 63.7530, as applicable. The Permittee must also conduct fuel analyses according to §63.7521 and establish maximum fuel pollutant input levels according to paragraphs (c)(1) through (3) of 40 CFR 63.7530, as applicable.

(d) If the Permittee elects to demonstrate compliance with an applicable emission limit through fuel analysis, then the Permittee must conduct fuel analyses according to §63.7521 and follow the procedures in paragraphs (d)(1) through (5) of 40 CFR 63.7505.

(e) The Permittee must submit the Notification of Compliance Status containing the results of the initial compliance demonstration according to the requirements in §63.7545(e).

D.2.25 Continuous Compliance Requirements [40 CFR 63.7535]

Pursuant to 40 CFR 63.7535, the Permittee shall comply with the following requirements:

(a) The Permittee must monitor and collect data according to 40 CFR 63.7535 and the site-specific monitoring plan required by §63.7505(d).

(b) Except for monitor malfunctions, associated repairs, and required quality assurance or control activities (including, as applicable, calibration checks and required zero and span adjustments), the Permittee must monitor continuously (or collect data at all required intervals) at all times that the affected source is operating.

(c) The Permittee may not use data recorded during monitoring malfunctions, associated repairs, or required quality assurance or control activities in data averages and calculations used to report emission or operating levels. The Permittee must use all the data collected during all other periods in assessing the operation of the control device and associated control system. Boilers and process heaters that have an applicable carbon monoxide work practice standard and are required to install and operate a CEMS, may not use data recorded during periods when the boiler or process heater is operating at less than 50 percent of its rated capacity.

Pursuant to 40 CFR 63.7540, the Permittee shall use the following to demonstrate continuous compliance with the emission limits and work practice standards.

(a) The Permittee must demonstrate continuous compliance with each emission limit, operating limit, and work practice standard in Tables 1 through 4 to this subpart that applies to the Permittee according to the methods specified in Table 8 to this subpart and paragraphs (a)(1) through (10) of 40 CFR 63.7540.

(b) The Permittee must report each instance in which the Permittee did not meet each emission limit, operating limit, and work practice standard in Tables 1 through 4 to this subpart that apply. The Permittee must also report each instance during a startup, shutdown, or malfunction when the Permittee did not meet each applicable emission limit, operating limit, and work practice standard. These instances are deviations from the emission limits and work practice standards in this subpart. These deviations must be reported according to the requirements in §63.7550.

(c) During periods of startup, shutdown, and malfunction, the Permittee must operate in accordance with the SSMP as required in §63.7505(e).

(d) Consistent with §§63.6(e)and 63.7(e)(1), deviations that occur during a period of startup, shutdown, or malfunction are not violations if the Permittee demonstrates to the EPA Administrator's satisfaction that the Permittee was operating in accordance with the SSMP. The EPA Administrator will determine whether deviations that occur during a period of startup, shutdown, or malfunction are violations, according to the provisions in §63.6(e).

(e) Following the compliance date, the Permittee must demonstrate continuous compliance under the emission averaging provision with this subpart on a continuous basis by meeting the requirements of paragraphs (a)(1) through (4) of 40 CFR 63.7541.

Record Keeping and Reporting Requirements [326 IAC 2-7-5(3)] [326 IAC 2-7-19]

D.2.26 Record Keeping Requirements

(a) To document compliance with Conditions D.2.5 and D.2.19, the Permittee shall maintain records of the concentration of H2S in fuel gases by methods defined under Condition D.2.19.

(b) All records shall be maintained in accordance with Section C - General Record Keeping Requirements, of this permit.

D.2.27 Record Keeping Requirements [40 CFR 63.1576]

(a) The Permittee shall keep the records specified in 40 CFR 63.1576 paragraphs (a)(1) through (3).

(1) A copy of each notification and report that the Permittee submitted to comply with this subpart, including all documentation supporting any initial notification or Notification of Compliance Status that the Permittee submitted, according to the requirements in 40 CFR 63.10(b)(2)(xiv).
(2) The records in 40 CFR 63.6(e)(1)(iii) through (v) related to startup, shutdown, and malfunction.
(3) Records of performance tests, performance evaluations, and opacity and visible emission observations as required in 40 CFR 63.10(b)(2)(viii).

(b) To document compliance with Conditions D.2.20 the Permittee shall maintain records of all the applicable parameters listed in Condition D.2.20.

(c) To document compliance with Condition D.2.21, the Permittee shall keep the records required in 40 CFR 63.1576 paragraphs (b)(1) through (5).
(1) Records described in 40 CFR 63.10(b)(2)(vi) through (xi).
(2) Monitoring data for continuous opacity monitoring systems during a performance evaluation as required in 40 CFR 63.6(h)(7)(i) and (ii).
(3) Previous (i.e., superceded) versions of the performance evaluation plan as required in 40 CFR 63.8(d)(3).
(4) Requests for alternatives to the relative accuracy test for continuous emission monitoring systems as required in 40 CFR 63.8(f)(6)(i).
(5) Records of the date and time that each deviation started and stopped, and whether the deviation occurred during a period of startup, shutdown, or malfunction or during another period.

(d) The Permittee shall keep the records in 40 CFR 63.6(h) for visible emission observations.

(e) The Permittee shall keep records required by Tables 6, 7, 13, and 14 of this subpart (for catalytic cracking units); and Tables 20, 21, 27 and 28 of this subpart (for catalytic reforming units); Tables 34 and 35 of this subpart (for sulfur recovery units); and Table 39 of this subpart (for bypass lines) to show continuous compliance with each applicable emission limitation.

(f) The Permittee shall keep a current copy of the operation, maintenance, and monitoring plan onsite and available for inspection. The Permittee also shall keep records to show continuous compliance with the procedures in the operation, maintenance, and monitoring plan.

(g) The Permittee shall keep the records of any changes that affect emission control system performance including, but not limited to, the location at which the vent stream is introduced into the flame zone for a boiler or process heater.

(h) The records must be in a form suitable and readily available for expeditious review according to 40 CFR 63.10(b)(1).

(i) As specified in 40 CFR 63.10(b)(1), the Permittee shall keep each record for 5 years following the date of each occurrence, measurement, maintenance, corrective action, report, or record.

(j) The Permittee shall keep each record on site for at least 2 years after the date of each occurrence, measurement, maintenance, corrective action, report, or record, according to 40 CFR 63.10(b)(1). The Permittee can keep the records offsite for the remaining 3 years.

(k) All records shall be maintained in accordance with Section C - General Record Keeping Requirements, of this permit.

D.2.28 Notifications [40 CFR Part 63.1574] [326 IAC 20-50-1]

(a) Except as allowed in 40 CFR 63.1574 paragraphs (a)(1) through (3), the Permittee shall submit all of the applicable notifications in 40 CFR 63.6(h), 63.7(b) and (c), 63.8(e), 63.8(f)(4), 63.8(f)(6), and 63.9(b) through (h) by the dates specified below.

(1) The Permittee shall submit the notification of intention to construct or reconstruct according to 40 CFR 63.9(b)(5).

(2) The Permittee must submit the notification of intent to conduct a performance test required in 40 CFR 63.7(b) at least 30 calendar days before the performance test is scheduled to begin.

(3) If the Permittee is required to conduct a performance test, performance evaluation, design evaluation, opacity observation, visible emission observation, or other initial compliance demonstration, then the Permittee shall submit a notification of compliance status according to 40 CFR 63.9(h)(2)(ii). The Permittee can submit this information in an operating permit application, in an amendment to an operating permit application, in a separate submission, or in any combination. If the required information has been submitted previously, the Permittee does not have to provide a separate notification of compliance status and may refer to the earlier submissions instead of duplicating and resubmitting the previously submitted information.

(i) For each initial compliance demonstration that does not include a performance test, the Permittee must submit the Notification of Compliance Status no later than 30 calendar days following completion of the initial compliance demonstration.

(ii) For each initial compliance demonstration that includes a performance test, the Permittee must submit the notification of compliance status, including the performance test results, no later than 150 calendar days after the compliance date specified for the affected source in 40 CFR 63.1573.

(b) As specified in 40 CFR 63.9(b)(3), if the Permittee starts a new or reconstructed affected source on or after April 11, 2002, then the Permittee shall submit the initial notification no later than 120 days after the source becomes subject to this subpart.

(c) The Permittee shall include the information in Table 42 of this subpart in the notification of compliance status.

(d) If the Permittee requests an extension of compliance for an existing catalytic cracking unit as allowed in 40 CFR 63.1563(c), the Permittee shall submit a notification to IDEM, OAQ containing the required information by October 13, 2003.

(e) As required by this subpart, the Permittee shall prepare and implement an operation, maintenance, and monitoring plan for each affected source, control system, and continuous monitoring system. The purpose of this plan is to detail the operation, maintenance, and monitoring procedures the Permittee will follow.

(1) The Permittee shall submit the plan to IDEM, OAQ for review and approval along with the notification of compliance status. While the Permittee does not have to include the entire plan in the part 70 or 71 permit, the Permittee shall include the duty to prepare and implement the plan as an applicable requirement in the part 70

or 71 operating permit. The Permittee shall submit any changes to IDEM, OAQ for review and approval and comply with the plan until the change is approved.

(2) Each plan must include, at a minimum, the information specified in 40 CFR 63.1574 paragraphs (f)(2)(i) through (x).

(i) Process and control device parameters to be monitored for each affected source, along with established operating limits.

(ii) Procedures for monitoring emissions and process and control device operating parameters for each affected source.

(iii) Procedures that the Permittee will use to determine the coke burn-rate, the volumetric flow rate (if the Permittee uses process data rather than direct measurement), and the rate of combustion of liquid or solid fossil fuels if the Permittee uses an incinerator-waste heat boiler to burn the exhaust gases from a catalyst regenerator.

(iv) Procedures and analytical methods the Permittee will use to determine the equilibrium catalyst Ni concentration, the equilibrium catalyst Ni concentration monthly rolling average, and the hourly or hourly average Ni operating value.

(v) Procedures the Permittee will use to determine the pH of the water (or scrubbing liquid) exiting a wet scrubber if the Permittee uses pH strips.

(vi) Procedures the Permittee will use to determine the HCl concentration of gases from a semi-regenerative catalytic reforming unit with an internal scrubbing system (i.e., no add-on control device) when the Permittee uses a colormetric tube sampling system, including procedures for correcting for pressure (if applicable to the sampling equipment).

(vii) Procedures the Permittee will use to determine the gas flow rate for a catalytic cracking unit if the Permittee uses the alternative procedure based on air flow rate and temperature.

(viii) Monitoring schedule, including when the Permittee will monitor and will not monitor an affected source (e.g., during the coke burn-off, regeneration process).

(ix) Quality control plan for each continuous opacity monitoring system and continuous emission monitoring system the Permittee uses to meet an emission limit in this subpart. This plan must include procedures the Permittee will use for calibrations, accuracy audits, and adjustments to the system needed to meet applicable requirements for the system.

(x) Maintenance schedule for each affected source, monitoring system, and control device that is generally consistent with the manufacturer's instructions for routine and long-term maintenance.

D.2.29 Reporting Requirements [40 CFR Part 63.1575] [326 IAC 20-50-1]

Pursuant to 40 CFR 63.1576, the following Reporting Requirements shall apply:

(a) The Permittee shall submit each applicable report in Table 43 of this subpart.

(b) Unless IDEM, OAQ has approved a different schedule, the Permittee shall submit each report by the date in Table 43 of this subpart and according to the requirements in 40 CFR 63.1576 paragraphs (b)(1) through (5).

(1) The first compliance report must cover the period beginning on the compliance date that is specified for the affected source in 40 CFR 63.1563 and ending on June 30 or December 31, whichever date is the first date following the end of the first calendar half after the compliance date that is specified for the affected source in 40 CFR 63.1563.

(2) The first compliance report must be postmarked or delivered no later than July 31 or January 31, whichever date follows the end of the first calendar half after the compliance date that is specified for the affected source in 40 CFR 63.1563.

(3) Each subsequent compliance report must cover the semiannual reporting period from January 1 through June 30 or the semiannual reporting period from July 1 through December 31.

(4) Each subsequent compliance report must be postmarked or delivered no later than July 31 or January 31, whichever date is the first date following the end of the semiannual reporting period.

(5) For each affected source that is subject to permitting regulations pursuant to part 70 or 71 of this chapter, and if IDEM, OAQ has established dates for submitting semiannual reports pursuant to 40 CFR 70.6(a)(3)(iii)(A) or 40 CFR 71.6(a)(3)(iii)(A), the Permittee may submit the first and subsequent compliance reports according to the dates IDEM, OAQ has established instead of according to the dates in 40 CFR 63.1576 paragraphs (b)(1) through (4).

(c) The compliance report must contain the information required in 40 CFR 63.1576 paragraphs (c)(1) through (4).

(1) Company name and address.

(2) Statement by a responsible official, with that official's name, title, and signature, certifying the accuracy of the content of the report.

(3) Date of report and beginning and ending dates of the reporting period.

(4) If there are no deviations from any applicable emission limitation and there are no deviations from the requirements for work practice standards, a statement that there were no deviations from the emission limitations or work practice standards during the reporting period and that no continuous emission monitoring system or continuous opacity monitoring system was inoperative, inactive, malfunctioning, out-of-control, repaired, or adjusted.

(d) For each deviation from an emission limitation and for each deviation from the requirements for work practice standards that occurs at an affected source where the Permittee is not using a continuous opacity monitoring system or a continuous emission monitoring system to comply with the emission limitation or work practice standard in this subpart, the compliance report must contain the information in 40 CFR 63.1576 paragraphs (c)(1) through (3) and the information in 40 CFR 63.1576 paragraphs (d)(1) through (3).

(1) The total operating time of each affected source during the reporting period.

(2) Information on the number, duration, and cause of deviations (including unknown cause, if applicable), as applicable, and the corrective action taken.

(3) Information on the number, duration, and cause for monitor downtime incidents (including unknown cause, if applicable, other than downtime associated with zero and span and other daily calibration checks).

(e) For each deviation from an emission limitation occurring at an affected source where the Permittee is using a continuous opacity monitoring system or a continuous emission monitoring system to comply with the emission limitation, the Permittee shall include the information in 40 CFR 63.1576 paragraphs (d)(1) through (3) and the information in 40 CFR 63.1576 paragraphs (e)(1) through (13).

(1) The date and time that each malfunction started and stopped.

(2) The date and time that each continuous opacity monitoring system or continuous emission monitoring system was inoperative, except for zero (low-level) and high-level checks.

(3) The date and time that each continuous opacity monitoring system or continuous emission monitoring system was out-of-control, including the information in 40 CFR 63.8(c)(8).

(4) The date and time that each deviation started and stopped, and whether each deviation occurred during a period of startup, shutdown, or malfunction or during another period.

(5) A summary of the total duration of the deviation during the reporting period (recorded in minutes for opacity and hours for gases and in the averaging period specified in the regulation for other types of emission limitations), and the total duration as a percent of the total source operating time during that reporting period.

(6) A breakdown of the total duration of the deviations during the reporting period and into those that are due to startup, shutdown, control equipment problems, process problems, other known causes, and other unknown causes.

(7) A summary of the total duration of downtime for the continuous opacity monitoring system or continuous emission monitoring system during the reporting period (recorded in minutes for opacity and hours for gases and in the averaging time specified in the regulation for other types of standards), and the total duration of downtime for the continuous opacity monitoring system or continuous emission monitoring system as a percent of the total source operating time during that reporting period.

(8) A breakdown of the total duration of downtime for the continuous opacity monitoring system or continuous emission monitoring system during the reporting period into periods that are due to monitoring equipment malfunctions, non-monitoring equipment malfunctions, quality assurance/quality control calibrations, other known causes, and other unknown causes.

(9) An identification of each HAP that was monitored at the affected source.

(10) A brief description of the process units.

(11) The monitoring equipment manufacturer(s) and model number(s).

(12) The date of the latest certification or audit for the continuous opacity monitoring system or continuous emission monitoring system.

(13) A description of any change in the continuous emission monitoring system or continuous opacity monitoring system, processes, or controls since the last reporting period.

(f) The Permittee shall include the information required in 40 CFR 63.1576 paragraphs (f)(1) through (2) in each compliance report, if applicable.

(1) A copy of any performance test done during the reporting period on any affected unit. The report may be included in the next semiannual report. The copy must include a complete report for each test method used for a particular kind of emission point tested. For additional tests performed for a similar emission point using the same method, the Permittee shall submit the results and any other information required, but a complete test report is not required. A complete test report contains a brief process description; a simplified flow diagram showing affected processes, control equipment, and sampling point locations; sampling site data; description of sampling and analysis procedures and any modifications to standard procedures; quality assurance procedures; record of operating conditions during the test; record of preparation of standards; record of calibrations; raw data sheets for field sampling; raw data sheets for field and laboratory analyses; documentation of calculations; and any other information required by the test method.

(2) Any requested change in the applicability of an emission standard (e.g., Permittee wants to change from the PM standard to the Ni standard for catalytic cracking units or from the HCl concentration standard to percent reduction for catalytic reforming units) in the periodic report. The Permittee shall include all information and data necessary to demonstrate compliance with the new emission standard selected and any other associated requirements.

(g) The Permittee may submit reports required by other regulations in place of or as part of the compliance report if they contain the required information.

(h) The reporting requirements in 40 CFR 63.1576 paragraphs (h)(1) and (2) apply to startups, shutdowns, and malfunctions:

(1) When actions taken to respond are consistent with the plan, the Permittee is not required to report these events in the semiannual compliance report and the reporting requirements in 40 CFR 63.6(e)(3)(iii) and 63.10(d)(5) do not apply.

(2) When actions taken to respond are not consistent with the plan, the Permittee shall report these events and the response taken in the semiannual compliance report. In this case, the reporting requirements in 40 CFR 63.6(e)(3)(iv) and 63.10(d)(5) do not apply.

(i) If IDEM, OAQ has approved a period of planned maintenance for the catalytic cracking unit according to the requirements in 40 CFR 63.1576 paragraph (j), the Permittee shall include the following information in the compliance report.

(1) In the compliance report due for the 6-month period before the routine planned maintenance is to begin, the Permittee shall include a full copy of the written request to IDEM, OAQ and written approval received from IDEM, OAQ.

(2) In the compliance report due after the routine planned maintenance is complete, the Permittee must include a description of the planned routine maintenance that was performed for the control device during the previous 6-month period, and the total number of hours during those 6 months that the control device did not meet the emission limitations and monitoring requirements as a result of the approved routine planned maintenance.

(j) If Permittee owns or operates multiple catalytic cracking units that are served by a single wet scrubber emission control device (e.g., a Venturi scrubber), the Permittee may request IDEM, OAQ to approve a period of planned routine maintenance for the control device needed to meet requirements in the operation, maintenance, and monitoring plan. The Permittee must present data to IDEM, OAQ demonstrating that the period of planned maintenance results in overall emissions reductions. During this pre-approved time period, the emission control device may be taken out of service while maintenance is performed on the control device and/or one of the process units while the remaining process unit(s) continues to operate. During the period the emission control device is unable to operate, the emission limits, operating limits, and monitoring requirements applicable to the unit that is operating and the wet scrubber emission control device do not apply. IDEM, OAQ may require that the Permittee take specified actions to minimize emissions during the period of planned maintenance.

(1) The Permittee must submit a written request to IDEM, OAQ at least 6 months before the planned maintenance is scheduled to begin with a copy to the EPA Regional Administrator.

(2) Permittee's written request must contain the information in 40 CFR 63.1575 paragraphs (j)(2)(i) through (v).

(i) A description of the planned routine maintenance to be performed during the next 6 months and why it is necessary.

(ii) The date the planned maintenance will begin and end.

(iii) A quantified estimate of the HAP and criteria pollutant emissions that will be emitted during the period of planned maintenance.

(iv) An analysis showing the emissions reductions resulting from the planned maintenance as opposed to delaying the maintenance until the next unit turnaround.

(v) Actions the Permittee will take to minimize emissions during the period of planned maintenance.

D.2.30 Notification Requirements [40 CFR Part 63.7545]

Pursuant to 40 CFR 63.7545, the Permittee shall comply with the following notification requirements:

(a) The Permittee must submit all of the notifications in §§63.7(b) and (c), 63.8 (e), (f)(4) and (6), and 63.9 (b) through (h) that apply by the dates specified.

(b) As specified in §63.9(b)(2), if the Permittee startup the affected source before the date of publication of the final rule in the federal register, the Permittee must submit an Initial Notification not later than 120 days after the date of publication of the final rule in the federal register. The Initial Notification must include the information required in paragraphs (b)(1) and (2) of 40 CFR 63.7545, as applicable.

(1) If the affected source has an annual capacity factor of greater than 10 percent, then the Initial Notification must include the information required by §63.9(b)(2).

(2) If the affected source has a federally enforceable permit that limits the annual capacity factor to less than or equal to 10 percent such that the unit is in one of the limited use subcategories (the limited use solid fuel subcategory, the limited use liquid fuel subcategory, or the limited use gaseous fuel subcategory), then the Initial Notification must include the information required by §63.9(b)(2) and also a signed statement indicating that affected source has a federally enforceable permit that limits the annual capacity factor to less than or equal to 10 percent.

(c) As specified in §63.9(b)(3), if the Permittee startup a new or reconstructed affected source on or after the date of publication of the final rule in the federal register, the Permittee must submit an Initial Notification not later than 120 days after its become subject to this subpart. The Initial Notification must include the information required in paragraphs (c)(1) and (2) of 40 CFR 63.7545, as applicable.

(1) If the affected source has an annual capacity factor of greater than 10 percent, then the Initial Notification must include the information required by §63.9(b).

(2) If the affected source has a federally enforceable permit that limits the annual capacity factor to less than or equal to 10 percent such that the unit is in one of the limited use subcategories, then the Initial Notification must include the information required by §63.9(b) and a signed statement indicating that affected source has a federally enforceable permit that limits the annual capacity factor to less than or equal to 10 percent.

(d) If the Permittee is required to conduct a performance test then the Permittee must submit a Notification of Intent to conduct a performance test at least 30 days before the performance test is scheduled to begin as required in §63.7(b)(1).

(e) If the Permittee is required to conduct an initial compliance demonstration as specified in §63.7530(a), then the Permittee must submit a Notification of Compliance Status according to §63.9(h)(2)(ii). For each initial compliance demonstration, the Permittee must submit the Notification of Compliance Status, including all performance test results and fuel analyses, before the close of business on the 60th day following the completion of the performance test and/or other initial compliance demonstrations according to §63.10(d)(2). The Notification of Compliance Status report must contain all the information specified in paragraphs (e)(l) through (9) of 40 CFR 63.7545, as applicable.

D.2.31 Recordkeeping Requirements [40 CFR Part 63.7555 and 7560]

Pursuant to 40 CFR 63.7555, the Permittee shall comply with the following recordkeeping requirements:

(a) The Permittee must keep records according to paragraphs (a)(1) through (3) of 40 CFR 63.7555.

(1) A copy of each notification and report that the Permittee submitted to comply with this subpart, including all documentation supporting any Initial Notification or Notification of Compliance Status or semiannual compliance report that the Permittee submitted, according to the requirements in §63.10(b)(2)(xiv).

(2) The records in §63.6(e)(3)(iii) through (v) related to startup, shutdown, and malfunction.

(3) Records of performance tests, fuel analyses, or other compliance demonstrations, performance evaluations, and opacity observations as required in §63.10(b)(2)(viii).

(b) For each CEMS, CPMS, and COMS, the Permittee must keep records according to paragraphs (b)(1) through (5) of 40 CFR 63.7555.

(1) Records described in §63.10(b)(2)(vi) through (xi).

(2) Monitoring data for continuous opacity monitoring system during a performance evaluation as required in §63.6(h)(7)(i) and (ii).
(3) Previous (i.e., superseded) versions of the performance evaluation plan as required in §63.8(d)(3).
(4) Request for alternatives to relative accuracy test for CEMS as required in §63.8(f)(6)(i).
(5) Records of the date and time that each deviation started and stopped, and whether the deviation occurred during a period of startup, shutdown, or malfunction or during another period.

(c) The Permittee must keep the records required in Table 8 to this subpart including records of all monitoring data and calculated averages for applicable operating limits such as opacity, pressure drop, carbon monoxide, and pH to show continuous compliance with each emission limit, operating limit, and work practice standard that applies to the Permittee.

(d) For each boiler or process heater subject to an emission limit, the Permittee must also keep the records in paragraphs (d)(1) through (5) of 40 CFR 63.7555.

(1) The Permittee must keep records of monthly fuel use by each boiler or process heater, including the type(s) of fuel and amount(s) used.
(2) The Permittee must keep records of monthly hours of operation by each boiler or process heater. This requirement applies only to limited-use boilers and process heaters.
(3) A copy of all calculations and supporting documentation of maximum chlorine fuel input, using Equation 1 of §63.7530, that were done to demonstrate continuous compliance with the HCl emission limit, for sources that demonstrate compliance through performance testing. For sources that demonstrate compliance through fuel analysis, a copy of all calculations and supporting documentation of HCl emission rates, using Equation 5 of §63.7530, that were done to demonstrate compliance with the HCl emission limit. Supporting documentation should include results of any fuel analyses and basis for the estimates of maximum chlorine fuel input or HCl emission rates. The Permittee can use the results from one fuel analysis for multiple boilers and process heaters provided they are all burning the same fuel type. However, the Permittee must calculate chlorine fuel input, or HCl emission rate, for each boiler and process heater.
(4) A copy of all calculations and supporting documentation of maximum TSM fuel input, using Equation 2 of §63.7530, that were done to demonstrate continuous compliance with the TSM emission limit for sources that demonstrate compliance through performance testing. For sources that demonstrate compliance through fuel analysis, a copy of all calculations and supporting documentation of TSM emission rates, using Equation 6 of §63.7530, that were done to demonstrate compliance with the TSM emission limit. Supporting documentation should include results of any fuel analyses and basis for the estimates of maximum TSM fuel input or TSM emission rates. The Permittee can use the results from one fuel analysis for multiple boilers and process heaters provided they are all burning the same fuel type. However, the Permittee must calculate TSM fuel input, or TSM emission rates, for each boiler and process heater.
(5) A copy of all calculations and supporting documentation of maximum mercury fuel input, using Equation 3 of §63.7530, that were done to demonstrate continuous compliance with the mercury emission limit for sources that demonstrate compliance through performance testing. For sources that demonstrate compliance through fuel analysis, a copy of all calculations and supporting documentation of mercury emission rates, using Equation 7 of §63.7530, that were done to demonstrate compliance with the mercury emission limit. Supporting documentation should include results of any fuel analyses and basis for the estimates of maximum mercury fuel input or mercury emission rates. The Permittee can use the results from one fuel analysis for multiple boilers and process heaters provided they are all burning the same fuel type. However, the Permittee must calculate mercury fuel input, or mercury emission rates, for each boiler and process heater.

(e) If the boiler or process heater is subject to an emission limit or work practice standard in Table 1 to this subpart and has a federally enforceable permit that limits the annual capacity factor to less than or equal to 10 percent such that the unit is in one of the limited use subcategories, the Permittee must keep the records in paragraphs (e)(1) and (2) of 40 CFR 63.7555.

(1) A copy of the federally enforceable permit that limits the annual capacity factor of the source to less than or equal to 10 percent.
(2) Fuel use records for the days the boiler or process heater was operating.

(f) The records must be in a form suitable and readily available for expeditious review, according to §63.10(b)(1).

(g) As specified in §63.10(b)(1), the Permittee must keep each record for 5 years following the date of each occurrence, measurement, maintenance, corrective action, report, or record.

(h) The Permittee must keep each record on site for at least 2 years after the date of each occurrence, measurement, maintenance, corrective action, report, or record, according to §63.10(b)(1). The Permittee can keep the records off site for the remaining 3 years.

D.2.32 Reporting Requirements [40 CFR Part 63.7550]

Pursuant to 40 CFR 63.7550, the Permittee shall comply with the following reporting requirements:

(a) The Permittee must submit each report in Table 9 to this subpart that applies to the Permittee.

(b) Unless the EPA Administrator has approved a different schedule for submission of reports under §63.10(a), the Permittee must submit each report by the date in Table 9 to this subpart and according to the requirements in paragraphs (b)(1) through (5) of 40 CFR 63.7550.

(1) The first compliance report must cover the period beginning on the compliance date that is specified for the affected source in §63.7495 and ending on June 30 or December 31, whichever date is the first date that occurs at least 180 days after the compliance date that is specified for the source in §63.7495.
(2) The first compliance report must be postmarked or delivered no later than July 31 or January 31, whichever date is the first date following the end of the first calendar half after the compliance date that is specified for the source in §63.7495.
(3) Each subsequent compliance report must cover the semiannual reporting period from January 1 through June 30 or the semiannual reporting period from July 1 through December 31.
(4) Each subsequent compliance report must be postmarked or delivered no later than July 31 or January 31, whichever date is the first date following the end of the semiannual reporting period.
(5) For each affected source that is subject to permitting regulations pursuant to 40 CFR part 70 or 40 CFR part 71, and if the permitting authority has established dates for submitting semiannual reports pursuant to 40 CFR 70.6(a)(3)(iii)(A) or 40 CFR 71.6(a)(3)(iii)(A), the Permittee may submit the first and subsequent compliance reports according to the dates the permitting authority has established instead of according to the dates in paragraphs (b)(1) through (4) of 40 CFR 63.7550.

(c) The compliance report must contain the information required in paragraphs (c)(1) through (11) of 40 CFR Part 63.7550.

(d) For each deviation from an emission limit or operating limit in this subpart and for each deviation from the requirements for work practice standards in this subpart that occurs at an affected source where the Permittee is not using a CMSs to comply with that emission limit, operating limit, or work practice standard, the compliance report must contain the information in paragraphs (c)(1) through (10) of 40 CFR 63.7550 and the information

required in paragraphs (d)(1) through (4) of 40 CFR 63.7550. This includes periods of startup, shutdown, and malfunction.

(1) The total operating time of each affected source during the reporting period.
(2) A description of the deviation and which emission limit, operating limit, or work practice standard from which the Permittee deviated.
(3) Information on the number, duration, and cause of deviations (including unknown cause), as applicable, and the corrective action taken.
(4) A copy of the test report if the annual performance test showed a deviation from the emission limit for particulate matter or the alternative TSM limit, a deviation from the HCl emission limit, or a deviation from the mercury emission limit.

(e) For each deviation from an emission limitation and operating limit or work practice standard in this subpart occurring at an affected source where the Permittee is using a CMS to comply with that emission limit, operating limit, or work practice standard, the Permittee must include the information in paragraphs (c)(1) through (10) of 40 CFR 63.7550 and the information required in paragraphs (e)(1) through (12) of 40 CFR 63.7550. This includes periods of startup, shutdown, and malfunction and any deviations from the site-specific monitoring plan as required in §63.7505(d).

(f) Each affected source that has obtained a title V operating permit pursuant to 40 CFR part 70 or 40 CFR part 71 must report all deviations as defined in this subpart in the semiannual monitoring report required by 40 CFR 70.6(a)(3)(iii)(A) or 40 CFR 71.6(a)(3)(iii)(A). If an affected source submits a compliance report pursuant to Table 9 to this subpart along with, or as part of, the semiannual monitoring report required by 40 CFR 70.6(a)(3)(iii)(A) or 40 CFR 71.6(a)(3)(iii)(A), and the compliance report includes all required information concerning deviations from any emission limit, operating limit, or work practice requirement in this subpart, submission of the compliance report satisfies any obligation to report the same deviations in the semiannual monitoring report. However, submission of a compliance report does not otherwise affect any obligation the affected source may have to report deviations from permit requirements to the permit authority.

(g) If the Permittee operates a new gaseous fuel unit that is subject to the work practice standard specified in Table 1 to this subpart, and the Permittee intends to use a fuel other than natural gas or equivalent to fire the affected unit, then the Permittee must submit a notification of alternative fuel use within 48 hours of the declaration of a period of natural gas curtailment or supply interruption, as defined in §63.7575. The notification must include the information specified in paragraphs (g)(1) through (5) of 40 CFR 7550.

SECTION D.3 **FACILITY OPERATION CONDITIONS**

Facility Description [326 IAC 2-7-5(15)]:

(d) The following storage vessels:

Tank ID	Tank Description	Max. Capacity (gallons)	Max. Withdrawal Rate (gal/hr)	Material Stored	Construction Date	NSPS and NESHAP applicability	Stack ID
1	fixed roof cone tank	404,418	168,000	hydrocarbon with vapor pressure no higher than the vapor pressure of jet naptha,	1940	-	075;
2	fixed roof cone tank	404,502	168,000	hydrocarbon with vapor pressure no higher than the vapor pressure of jet naptha,	1940	-	076;
3	fixed roof cone tank	404,334	168,000	hydrocarbon with vapor pressure no higher than the vapor pressure of jet naptha,	1940	-	077;
4	fixed roof cone tank	118,272	168,000	hydrocarbon with vapor pressure no higher than the vapor pressure of jet naptha,	1940	-	018;
5	fixed roof cone tank	120,456	168,000	hydrocarbon with vapor pressure no higher than the vapor pressure of jet naptha,	1940	-	019;
6	fixed roof cone tank	120,456	168,000	hydrocarbon with vapor pressure no higher than the vapor pressure of jet naptha,	1940	-	020;
7	fixed roof cone tank	126,000	168,000	hydrocarbon with vapor pressure no higher than the vapor pressure of jet naptha,	1940	-	078;
8	fixed roof cone tank	126,000	168,000	hydrocarbon with vapor pressure no higher than the vapor pressure of jet naptha,	1940	-	079;
9	fixed roof cone tank	204,204	168,000	hydrocarbon with vapor pressure no higher than the vapor pressure of jet naptha,	1940	-	023;
10	fixed roof cone tank	121,590	168,000	hydrocarbon with vapor pressure no higher than the vapor pressure of jet naptha,	1940	-	024;
11A	fixed roof cone tank	8,820	168,000	oil water / mixture	1972	-	080;
11B	fixed roof cone tank	8,820	168,000	oil water / mixture	1972	-	081;
12	fixed roof cone tank	6,090	168,000	hydrocarbon with vapor pressure no higher than the vapor pressure of jet naptha,	1988	40 CFR Part 60, Subpart Kb	082;

Tank ID	Tank Description	Max. Capacity (gallons)	Max. Withdrawal Rate (gal/hr)	Material Stored	Construction Date	NSPS and NESHAP applicability	Stack ID
15	fixed roof cone tank	24,654	168,000	hydrocarbon with vapor pressure no higher than the vapor pressure of jet naptha,	1941	-	083;
17	fixed roof cone tank	997,584	168,000	hydrocarbon with vapor pressure no higher than the vapor pressure of jet naptha,	1941	-	030;
18	internal floating roof tank,/mechanical primary seal	1,052,013	336,000	hydrocarbon with vapor pressure equal to or less than the vapor pressure of 13 RVP gasoline,	2003	40 CFR Part 60, Subpart Kb	037;
19	fixed roof cone tank/internal floating roof tank,/mechanical primary seal	616,938	336,000	hydrocarbon with vapor pressure equal to or less than the vapor pressure of 13 RVP gasoline,	1941	-	032;
21	fixed roof cone tank/internal floating roof tank,/mechanical primary seal	1,002,750	336,000	hydrocarbon with vapor pressure equal to or less than the vapor pressure of 13 RVP gasoline,	1941	-	034;
22A	fixed roof cone tank	1,050,000	84,000	hydrocarbon with vapor pressure of No. 2 fuel oil o less	2003	40 CFR 63, Subpart CC	120;
22B	fixed roof cone tank/insulated/heated cone tank	1,050,000	16,800	Residual Fuel Oil (No.6) or Petroleum Material with a vapor pressure equivalent to or less than No.2 distillate,	2006	-	127;
24	fixed roof cone tank/internal floating roof tank,/mechanical primary seal	588,714	336,000	hydrocarbon with vapor pressure equal to or less than the vapor pressure of 13 RVP gasoline,	1985	40 CFR Part 60, Subpart Kb	037;
25	fixed roof cone tank/internal floating roof tank,/mechanical primary seal	656,614	336,000	hydrocarbon with vapor pressure equal to or less than the vapor pressure of 13 RVP gasoline,	1941	-	038;
26	fixed roof cone tank/internal floating roof tank,/mechanical primary seal	1,006,068	336,000	hydrocarbon with vapor pressure equal to or less than the vapor pressure of 13 RVP gasoline,	1941	-	039;
33	fixed roof cone tank	2,262,960	168,000	hydrocarbon with vapor pressure no higher than the vapor pressure of jet naptha,	1946	-	085;
34	fixed roof cone tank	984,480	168,000	hydrocarbon with vapor pressure no higher than the vapor pressure of jet naptha,	1946	-	045;
35	fixed roof cone tank/internal floating roof tank,/mechanical primary seal	997,962	336,000	hydrocarbon with vapor pressure equal to or less than the vapor pressure of Distillate,	1946	-	046;

Tank ID	Tank Description	Max. Capacity (gallons)	Max. Withdrawal Rate (gal/hr)	Material Stored	Construction Date	NSPS and NESHAP applicability	Stack ID
36	fixed roof cone tank/internal floating roof tank,/mechanical primary seal	2,261,954	336,000	hydrocarbon with vapor pressure equal to or less than the vapor pressure of jet kerosene,	1946	-	047;
37	fixed roof cone tank	2,247,126	210,000	hydrocarbon with vapor pressure no higher than the vapor pressure of jet naptha,	1946	-	048;
38	fixed roof cone tank	2,248,386	210,000	hydrocarbon with vapor pressure no higher than the vapor pressure of jet naptha,	1948	-	049;;
39	fixed roof cone tank	2,250,234	168,000	hydrocarbon with vapor pressure no higher than the vapor pressure of jet naptha,	1948	-	050;
40	fixed roof cone tank/internal floating roof tank,/mechanical primary seal	2,222,388	336,000	RVP 15 Gasoline.	1949	-	051;
41	fixed roof cone tank/internal floating roof tank,/mechanical primary seal	2,204,244	336,000	hydrocarbon with vapor pressure equal to or less than the vapor pressure of 13 RVP gasoline,	1949	-	052;
42	fixed roof cone tank	2,261,574	168,000	hydrocarbon with vapor pressure no higher than the vapor pressure of jet naptha,	1950	-	053;
43	fixed roof cone tank	2,254,098	168,000	hydrocarbon with vapor pressure no higher than the vapor pressure of jet naptha,	1951	-	054;
44	fixed roof cone tank/internal floating roof tank,/mechanical primary seal	2,310,000	336,000	hydrocarbon with vapor pressure equal to or less than the vapor pressure of 13 RVP gasoline,	1951	-	055;
45	fixed roof cone tank/internal floating roof tank,/mechanical primary seal	2,310,000	336,000	hydrocarbon with vapor pressure equal to or less than the vapor pressure of 13 RVP gasoline,	1951	-	056;
46	fixed roof cone tank/mechanical primary seal	3,402,000	168,000	hydrocarbon with vapor pressure equal to or less than the vapor pressure of Distillate,	1955	-	057;
47	fixed roof cone tank/internal floating roof tank,/mechanical primary seal	5,040,000	336,000	hydrocarbon with vapor pressure equal to or less than the vapor pressure of 13 RVP gasoline,	1976	40 CFR Part 60, Subpart K	058;
48	fixed roof cone tank/external floating roof tank /mechanical primary seal	4,032,000	336,000	hydrocarbon with vapor pressure equal to or less than the vapor pressure of 13 RVP gasoline,	1958	-	059;

Tank ID	Tank Description	Max. Capacity (gallons)	Max. Withdrawal Rate (gal/hr)	Material Stored	Construction Date	NSPS and NESHAP applicability	Stack ID
49	fixed roof cone tank/ external floating roof tank /mechanical primary seal	4,032,000	336,000	hydrocarbon with vapor pressure equal to or less than the vapor pressure of 13 RVP gasoline,	1958	-	060;
50	fixed roof cone tank/internal floating roof tank,/mechanical primary seal	3,934,266	336,000	hydrocarbon with vapor pressure equal to or less than the vapor pressure of 13 RVP gasoline,	1965	-	061;
51	fixed roof cone tank/internal floating roof tank,/mechanical primary seal	3,937,266	336,000	hydrocarbon with vapor pressure equal to or less than the vapor pressure of 13 RVP gasoline,	1973	-	062;
52	fixed roof cone tank	3,935,148	336,000	hydrocarbon with vapor pressure no higher than the vapor pressure of jet naptha,	1976	40 CFR Part 60, Subpart K	063;
53	fixed roof cone tank	16,926	168,000	Ethanol,	1985	40 CFR Part 60, Subpart Kb	086;
54	fixed roof cone tank	16,926	168,000	Ethanol,	1985	40 CFR Part 60, Subpart Kb	087;
55	fixed roof cone tank	11,634	168,000	Ethanol,	1980	-	088;
56	fixed roof cone tank	11,634	168,000	Ethanol,	1980	-	089;
58	fixed roof cone tank	16,800	168,000	hydrocarbon with vapor pressure equal to or less than the vapor pressure of 13 RVP gasoline,	1980	-	102;
159	fixed roof cone tank	16,800	168,000	hydrocarbon with vapor pressure no higher than the vapor pressure of jet naptha,	1988	40 CFR Part 60, Subpart Kb	103;
160	fixed roof cone tank	16,800	168,000	hydrocarbon with vapor pressure no higher than the vapor pressure of jet naptha,	1994	40 CFR Part 60, Subpart Kb	104;
161	fixed roof cone tank	16,800	168,000	hydrocarbon with vapor pressure no higher than the vapor pressure of jet naptha,	1994	40 CFR Part 60, Subpart Kb	105;
162	fixed roof cone tank	16,800	168,000	hydrocarbon with vapor pressure no higher than the vapor pressure of jet naptha,	1994	40 CFR Part 60, Subpart Kb	106;
163	fixed roof cone tank	16,800	168,000	hydrocarbon with vapor pressure no higher than the vapor pressure of jet naptha,	1983	-	107;
164	fixed roof cone tank	16,800	168,000	hydrocarbon with vapor pressure no higher than the vapor pressure of jet naptha,	1983	-	108;

Tank ID	Tank Description	Max. Capacity (gallons)	Max. Withdrawal Rate (gal/hr)	Material Stored	Construction Date	NSPS and NESHAP applicability	Stack ID
165	fixed roof cone tank	16,800	168,000	hydrocarbon with vapor pressure no higher than the vapor pressure of jet naptha,	1985	40 CFR Part 60, Subpart Kb	109;
166	fixed roof cone tank	16,800	168,000	hydrocarbon with vapor pressure no higher than the vapor pressure of jet naptha,	1985	40 CFR Part 60, Subpart Kb	110;
167	fixed roof cone tank	16,800	168,000	hydrocarbon with vapor pressure no higher than the vapor pressure of jet naptha,	1985	40 CFR Part 60, Subpart Kb	111;
168	fixed roof cone tank	16,800	168,000	hydrocarbon with vapor pressure no higher than the vapor pressure of jet naptha,	1988	40 CFR Part 60, Subpart Kb	112;
169	fixed roof cone tank	16,800	168,000	hydrocarbon with vapor pressure equal to or less than the vapor pressure of 13 RVP gasoline,	1989	40 CFR Part 60, Subpart Kb	113;
125	fixed roof cone tank	157,000	6,000	hydrocarbon with vapor pressure of No.2 fuel oil or less	2005	-	015;
173	fixed roof cone tank/insulated/heated cone tank	1,050,000	16,800	Residual Fuel Oil (No.6) or Petroleum Material with a vapor pressure equivalent to or less than No.2 distillate,	2006	-	128;
174	Fixed roof cone tank/insulated/heated cone tank	1,050,000	16,800	Residual Fuel Oil (No.6) or Petroleum Material with a vapor pressure equivalent to or less than No.2 distillate,	2007	-	129
(The information describing the process contained in this emissions unit description box is descriptive information and does not constitute enforceable conditions.)							

Emission Limitations and Standards [326 IAC 2-7-5(1)]

D.3.1 General Provisions Relating to NSPS and NESHAP [326 IAC 12-1-1] [40 CFR Part 60, Subpart A] [326 IAC 20-1-1] [40 CFR Part 63, Subpart A]

(a) The provisions of 40 CFR Part 60, Subpart A - General Provisions, which are incorporated as 326 IAC 12-1-1, apply to tanks 47 and 52 described in this section except when otherwise specified in 40 CFR Part 60, Subpart K.

(b) The provisions of 40 CFR Part 60, Subpart A - General Provisions, which are incorporated as 326 IAC 12-1-1, apply to tanks 12, 18, 24, 53, 54, 159, 160, 161, 162, 165, 166, 167, 168 and 169 described in this section except when otherwise specified in 40 CFR Part 60, Subpart Kb.

(c) The provisions of 40 CFR Part 63, Subpart A - General Provisions, which are incorporated as 326 IAC 20-1-1, apply to certain of the tanks described in this section except when otherwise specified in 40 CFR Part 63, Subpart CC.

D.3.2 Volatile Organic Liquid Storage Vessels NSPS [326 IAC 12] [40 CFR 60, Subpart K]

The tanks identified as 47 and 52 are subject to the New Source Performance Standard, 326 IAC 12, (40 CFR Part 60.110, Subpart K) "Standards of Performance for Storage Vessels for Petroleum Liquids," because they have a storage capacity greater than 40,000 gallons and were constructed after June 11, 1973 and prior to May 19, 1978.

D.3.3 Volatile Organic Liquid Storage Vessels NSPS [326 IAC 12] [40 CFR Part 60, Subpart Kb]

(a) The provisions of 40 CFR 60, Subpart Kb - Standards of Performance for Volatile Organic Liquid Storage Vessels (including petroleum liquid tanks) for which construction, reconstruction, or modification commenced after July 23, 1984, which are incorporated by reference as 326 IAC 12, apply to tank Nos. 18 and 24. The Permittee shall comply with the requirements of this rule upon startup of the gasoline distribution facility.

(b) Pursuant to 40 CFR Part 60.110b, Subpart Kb (Standards of Performance for Volatile Organic Liquid Storage Vessels), tank Nos. 12, 53, 54, 159, 160, 161, 162, 165, 166, 167, 168 and 169, each with storage capacity of greater than 40 cubic meters and less than 75 cubic meters, are only subject to 40 CFR Part 60.116b, paragraphs (a), (b), and (d) which require record keeping.

D.3.4 Standards for Volatile Organic Compounds Emissions from Storage Vessels [40 CFR 60.112] [Subpart K]

Pursuant to 326 IAC 12 and 40 CFR 60.112, the Permittee of the tanks identified as 47 and 52 shall equip each tank with one (1) of the following:

(a) If the true vapor pressure of the petroleum liquid, as stored, is equal to or greater than 78 mm Hg (1.5 psia) but not greater than 570 mm Hg (11.1 psia), the tank shall be equipped with a floating roof, a vapor recovery system, or their equivalents.

(b) If the true vapor pressure of the petroleum liquid as stored is greater than 570 mm Hg (11.1 psia), the tank shall be equipped with a vapor recovery system or its equivalent.

D.3.5 Standards for Volatile Organic Compounds Emissions from Storage Vessels [40 CFR 60.112b] [Subpart Kb]

Pursuant to 326 IAC 12 and 40 CFR 60.112b, the Permittee has equipped and shall continue to equip tank Nos. 18 and 24 with a fixed roof in combination with an internal floating roof meeting the following specifications:

(a) The internal floating roof shall rest or float on the liquid surface (but not necessarily in complete contact with it) inside a tank that has a fixed roof. The internal floating roof shall be floating on the liquid surface at all times, except during initial fill and during those intervals when the tank is completely emptied or subsequently emptied and refilled. When the roof is resting on the leg supports, the process of filling, emptying, or refilling shall be continuous and shall be accomplished as rapidly as possible.

(b) Each internal floating roof shall be equipped with one of the following closure devices between the wall of the tank and the edge of the internal floating roof:

(1) A foam- or liquid-filled seal mounted in contact with the liquid (liquid-mounted seal). A liquid-mounted seal means a foam- or liquid-filled seal mounted in contact with the liquid between the wall of the tank and the floating roof continuously around the circumference of the tank.

(2) Two seals mounted one above the other so that each forms a continuous closure that completely covers the space between the wall of the tank and the edge of the internal floating roof. The lower seal may be vapor-mounted, but both must be continuous.

(3) A mechanical shoe seal. A mechanical shoe seal is a metal sheet held vertically against the wall of the tank by springs or weighted levers and is connected by braces to the floating roof. A flexible coated fabric (envelope) spans the annular space between the metal sheet and the floating roof.

(c) Each opening in a noncontact internal floating roof except for automatic bleeder vents (vacuum breaker vents) and the rim space vents is to provide a projection below the liquid surface.

(d) Each opening in the internal floating roof except for leg sleeves, automatic bleeder vents, rim space vents, column wells, ladder wells, sample wells, and stub drains is to be equipped with a cover or lid which is to be maintained in a closed position at all times (i.e., no visible gap) except when the device is in actual use. The cover or lid shall be equipped with a gasket. Covers on each access hatch and automatic gauge float well shall be bolted except when they are in use.

(e) Automatic bleeder vents shall be equipped with a gasket and are to be closed at all times when the roof is floating except when the roof is being floated off or is being landed on the roof leg supports.

(f) Rim space vents shall be equipped with a gasket and are to be set to open only when the internal floating roof is not floating or at the manufacturer's recommended setting.

(g) Each penetration of the internal floating roof for the purpose of sampling shall be a sample well. The sample well shall have a slit fabric cover that covers at least 90 percent of the opening.

(h) Each penetration of the internal floating roof that allows for passage of a column supporting the fixed roof shall have a flexible fabric sleeve seal or a gasketed sliding cover.

(i) Each penetration of the internal floating roof that allows for passage of a ladder shall have a gasketed sliding cover.

D.3.6 Storage Vessel Provisions [326 IAC 20-10-1] [40 CFR Part 63, Subpart CC]

All storage vessels that are affected facilities under 40 CFR Part 63, Subpart CC, shall comply with the provisions of 40 CFR 63.646 (listed under condition D.4.6).

D.3.7 Volatile Organic Compounds (VOC) [326 IAC 8-4-3]

Pursuant to 326 IAC 8-4-3, Tank Nos. 18 and 24 are subject to the following:

(a) The facility must be equipped with an internal floating roof equipped with a closure seal, or seals, to close the space between the roof edge and tank wall unless the source has been equipped with equally effective alternative control which has been approved.

(b) The facility is maintained such that there are no visible holes, tears, or other openings in the seal or any seal fabric or materials.

(c) All openings, except stub drains, are equipped with covers, lids, or seals such that:

(1) the cover, lid, or seal is in the closed position at all times except when in actual use;

(2) automatic bleeder vents are closed at all times except when the roof is floated off or landed on the roof leg supports;

(3) rim vents, if provided are set to open when the roof is being floated off the roof leg supports or at the manufacturer’s recommended setting.

D.3.8 Preventive Maintenance Plan [326 IAC 2-7-5(13)]

A Preventive Maintenance Plan, in accordance with Section B - Preventive Maintenance Plan, of this permit, is required for the storage tanks identified as Nos. 47 and 24 and any control devices.

Compliance Determination Requirements [326 IAC 2-1.1-11] [326 IAC 2-7-6(1)]

D.3.9 Performance Testing [40 CFR 60.113b]

The Permittee of tanks (18 and 24) as specified in 40 CFR 60.112b(a), shall meet the following requirements. The applicable paragraph for a particular tank depends on the control equipment installed to meet the requirements of 40 CFR 60.112b.

After installing the control equipment required to meet 40 CFR 60.112b(a)(1) (permanently affixed roof and internal floating roof), each Permittee shall:

(a) Visually inspect the internal floating roof, the primary seal, and the secondary seal (if one is in service), prior to filling the tank with VOL. If there are holes, tears, or other openings in the primary seal, the secondary seal, or the seal fabric or defects in the internal floating roof, or both, the Permittee shall repair the items before filling the tank.

(b) With a liquid-mounted or mechanical shoe primary seal, visually inspect the internal floating roof and the primary seal or the secondary seal (if one is in service) through manholes and roof hatches on the fixed roof at least once every 12 months after initial fill. If the internal floating roof is not resting on the surface of the VOL inside the tank, or there is liquid accumulated on the roof, or the seal is detached, or there are holes or tears in the seal fabric, the Permittee shall repair the items or empty and remove the tank from service within 45 days. If a failure that is detected during inspections required in this paragraph cannot be repaired within 45 days and if the vessel cannot be emptied within 45 days, a 30-day extension may be requested from the Administrator in the inspection report required in 40 CFR 60.115b(a)(3). Such a request for an extension must document that alternate storage capacity is unavailable and specify a schedule of actions the company will take that will assure that the control equipment will be repaired or the vessel will be emptied as soon as possible.

(c) For vessels equipped with a double-seal system as specified in 40 CFR 60.112b(a)(1)(ii)(B):

(1) Visually inspect the vessel as specified in paragraph (d) of this section at least every 5 years; or
(2) Visually inspect the vessel as specified in paragraph (b) of this section.

(d) Visually inspect the internal floating roof, the primary seal, the secondary seal (if one is in service), gaskets, slotted membranes and sleeve seals (if any) each time the tank is emptied and degassed. If the internal floating roof has defects, the primary seal has holes, tears, or other openings in the seal or the seal fabric, or the secondary seal has holes, tears, or other openings in the seal or the seal fabric, or the gaskets no longer close off the liquid surfaces from the atmosphere, or the slotted membrane has more than 10 percent open area, the Permittee shall repair the items as necessary so that none of the conditions specified in this paragraph exist before refilling the tank with VOL. In no event shall inspections conducted in accordance with this provision occur at intervals greater than 10 years in the case of vessels conducting the annual visual inspection as specified in paragraphs (b) and (c)(2) of this section and at intervals no greater than 5 years in the case of vessels specified in paragraph (c)(1) of this section.

(e) Notify the Administrator in writing at least 30 days prior to the filling or refilling of each tank for which an inspection is required by paragraphs (a) and (d) of this section to afford the Administrator the opportunity to have an observer present. If the inspection required by paragraph (d) of this section is not planned and the Permittee could not have known about the inspection 30 days in advance or refilling the tank, the Permittee shall notify the Administrator at least 7 days prior to the refilling of the tank. Notification shall be made by

telephone immediately followed by written documentation demonstrating why the inspection was unplanned. Alternatively, this notification including the written documentation may be made in writing and sent by express mail so that it is received by the Administrator at least 7 days prior to the refilling.

Compliance Monitoring Requirements [326 IAC 2-7-6(1)] [326 IAC 2-7-5(1)]

D.3.10 Monitoring of Storage Vessels [40 CFR 60.113] [40 CFR 60.116b]

Pursuant to 40 CFR 60.113, the Permittee shall comply with the applicable compliance monitoring requirements specified below for tanks identified as 47 and 52:

(a) Except as provided in 40 CFR 60.113 paragraph (d), the Permittee subject to this subpart shall maintain a record of the petroleum liquid stored, the period of storage, and the maximum true vapor pressure of that liquid during the respective storage period.

(b) Available data on the typical Reid vapor pressure and the maximum expected storage temperature of the stored product may be used to determine the maximum true vapor pressure from nomographs contained in API Bulletin 2517, unless the Administrator specifically requests that the liquid be sampled, the actual storage temperature determined, and the Reid vapor pressure determined from the sample(s).

(c) The true vapor pressure of each type of crude oil with a Reid vapor pressure less than 13.8 kPa (2.0 psia) or whose physical properties preclude determination by the recommended method is to be determined from available data and recorded if the estimated true vapor pressure is greater than 6.9 kPa (1.0 psia).

Pursuant to 40 CFR 60.116b, The Permittee shall comply with the applicable compliance monitoring requirements specified below for tanks identified as 18 and 24:

(a) The Permittee shall keep copies of all records required by this section, except for the record required by paragraph (b) of this section, for at least 2 years. The record required by paragraph (b) of this section will be kept for the life of the source.

(b) The Permittee of each tank as specified in 40 CFR 60.110b(a) shall keep readily accessible records showing the dimension of the tank and an analysis showing the capacity of the tank.

(c) The Permittee of each tank shall maintain a record of the VOL stored, the period of storage, and the maximum true vapor pressure of that VOL during the respective storage period.

(d) The Permittee of each tank either with a design capacity greater than or equal to 151 m3 storing a liquid with a maximum true vapor pressure that is normally less than 5.2 kPa or with a design capacity greater than or equal to 75 m3 but less than 151 m3 storing a liquid with a maximum true vapor pressure that is normally less than 27.6 kPa shall notify the Administrator within 30 days when the maximum true vapor pressure of the liquid exceeds the respective maximum true vapor pressure values for each volume range.

(e) Available data on the storage temperature may be used to determine the maximum true vapor pressure as determined below.

(1) For vessels operated above or below ambient temperatures, the maximum true vapor pressure is calculated based upon the highest expected calendar-month average of the storage temperature. For vessels operated at ambient temperatures, the maximum true vapor pressure is calculated based upon the maximum local monthly average ambient temperature as reported by the National Weather Service.

(2) For crude oil or refined petroleum products the vapor pressure may be obtained by the following:

(i) Available data on the Reid vapor pressure and the maximum expected storage temperature based on the highest expected calendar-month average temperature of the stored product may be used to determine the maximum true vapor pressure from nomographs contained in API Bulletin 2517 (incorporated by reference--see 40 CFR 60.17), unless the Administrator specifically requests that the liquid be sampled, the actual storage temperature determined, and the Reid vapor pressure determined from the sample(s).

(ii) The true vapor pressure of each type of crude oil with a Reid vapor pressure less than 13.8 kPa or with physical properties that preclude determination by the recommended method is to be determined from available data and recorded if the estimated maximum true vapor pressure is greater than 3.5 kPa.

(3) For other liquids, the vapor pressure:
(i) May be obtained from standard reference texts, or
(ii) Determined by ASTM Method D2879-83 (incorporated by reference--see 40 CFR 60.17); or
(iii) Measured by an appropriate method approved by the Administrator; or
(iv) Calculated by an appropriate method approved by the Administrator.

The Permittee shall comply with the monitoring requirements in 40 CFR 60.116b.

Record Keeping and Reporting Requirements [326 IAC 2-7-5(3)] [326 IAC 2-7-19]

D.3.11 Record Keeping and Reporting [40 CFR 60.115b]

The Permittee of tank Nos. 18 and 24 as specified in 40 CFR 60.112b(a) shall keep records and furnish reports as required by paragraphs (a), (b), or (c) of this section depending upon the control equipment installed to meet the requirements of 40 CFR 60.112b. The Permittee shall keep copies of all reports and records required by this section, except for the record required by (c)(1), for at least 2 years. The record required by (c)(1) will be kept for the life of the control equipment.

(a) After installing control equipment in accordance with 40 CFR 60.112b(a)(1) (fixed roof and internal floating roof), the Permittee shall meet the following requirements.

(1) Furnish the Administrator with a report that describes the control equipment and certifies that the control equipment meets the specifications of 40 CFR 60.112b(a)(1) and 40 CFR 60.113b(a)(1). This report shall be an attachment to the notification required by 40 CFR 60.7(a)(3).

(2) Keep a record of each inspection performed as required by 40 CFR 60.113b (a)(1), (a)(2), (a)(3), and (a)(4). Each record shall identify the tank on which the inspection was performed and shall contain the date the vessel was inspected and the observed condition of each component of the control equipment (seals, internal floating roof, and fittings).

(3) If any of the conditions described in 40 CFR 60.113b(a)(2) are detected during the annual visual inspection required by 40 CFR 60.113b(a)(2), a report shall be furnished to the Administrator within 30 days of the inspection. Each report shall identify the tank, the nature of the defects, and the date the tank was emptied or the nature of and date the repair was made.

(4) After each inspection required by 40 CFR 60.113b(a)(3) that finds holes or tears in the seal or seal fabric, or defects in the internal floating roof, or other control equipment defects listed in 40 CFR 60.113b(a)(3)(ii), a report shall be furnished to the Administrator within 30 days of the inspection. The report shall identify the

tank and the reason it did not meet the specifications of 40 CFR 61.112b(a)(1) or 40 CFR 60.113b(a)(3) and list each repair made.

(b) To document compliance with Condition D.3.10, the Permittee shall maintain records of all the required parameters listed in Condition D.3.10.

Pursuant to 40 CFR Part 60.110b, Subpart Kb (Standards of Performance for Volatile Organic Liquid Storage Vessels), storage tanks identified as Nos. 53, 54, 159, 160, 161, 162, 165, 166, 167, 168 and 169, with a storage capacity of greater than 40 cubic meters and less than 75 cubic meters, are subject to following recordkeeping requirements.

(a) The Permittee shall maintain permanent records at the source in accordance with (1) through (2) below:

(1) the dimension of the storage vessel; and
(2) an analysis showing the capacity of the storage vessel.

(b) All records shall be maintained in accordance with Section C - General Record Keeping Requirements, of this permit.

D.3.12 VOC Record Keeping Requirements [326 IAC 8-4-3] [40 CFR 60.115b] [40 CFR 60.110b]

(a) The Permittee shall comply with the record keeping requirements of 326 IAC 8-4-3. The following records are required for tank Nos. 18 and 24:
(1) The types of volatile petroleum liquids stored,
(2) The maximum true vapor pressure of the liquids stored, and
(3) The results of the inspections performed on the tanks.

Such records will be maintained for a period of two (2) years and shall be made available to the commissioner upon written request.

(b) Pursuant to 40 CFR Part 60.110b, Subpart Kb (Standards of Performance for Volatile Organic Liquid Storage Vessels), storage tanks identified as 22A and 125 are subject to following record keeping requirements.

The Permittee shall maintain permanent records at the source in accordance with (1) through (3) below:

(1) the dimension of the storage vessel;
(2) an analysis showing the capacity of the storage vessel; and
(3) vapor pressure of organic liquid stored in tanks 22A and 125.

(c) All records shall be maintained in accordance with Section C - General Record Keeping Requirements, of this permit.

SECTION D.4 **FACILITY OPERATION CONDITIONS**

Facility Description [326 IAC 2-7-5(15)]:

(t) Two (2) sets of Oil/water Separators equipped with covers for VOC control, identified as 071; Under 40 CFR 60, Subpart QQQ, new and existing drains are considered affected sources at a petroleum refinery.

(u) One (1) Miscellaneous operation (Sampling, Blowing, Purging, etc.), identified as 073;

(v) Pipeline Valves - Gas, identified as 090; Under 40 CFR 60, Subpart GGG, valves are considered affected sources at a petroleum refinery.

(w) Pipeline Valves - Light Liquid, identified as 091; Under 40 CFR 60, Subpart GGG, valves are considered affected sources at a petroleum refinery.

(x) Pipeline Valves - Heavy Liquid, identified as 092; Under 40 CFR 60, Subpart GGG, valves are considered affected sources at a petroleum refinery.

(y) Pipeline Valves - Hydrogen, identified as 093; Under 40 CFR 60, Subpart GGG, valves are considered affected sources at a petroleum refinery.

(z) Open Ended Valves, identified as 094; Under 40 CFR 60, Subpart GGG, open-ended valves are considered affected sources at a petroleum refinery.

(aa) Flanges, identified as 095; Under 40 CFR 60, Subpart GGG, the flanges are affected considered sources at a petroleum refinery.

(bb) Pump Seals Light Liquid, identified as 096; Under 40 CFR 60, Subpart GGG, equipment associated with the pump is considered an affected source at a petroleum refinery.

(cc) Pump Seals Heavy Liquid, identified as 097; Under 40 CFR 60, Subpart GGG, equipment associated with the pump is considered an affected source at a petroleum refinery.

(dd) Compressor Seals - Gas, identified as 098; Under 40 CFR 60, Subpart GGG, equipment associated with compressor is considered an affected source at a petroleum refinery.

(ee) Compressor Seals - Heavy Liquid, identified as 099; Under 40 CFR 60, Subpart GGG, equipment associated with compressor is considered an affected source at a petroleum refinery.

(ff) Drains, identified as 100.

(gg) Vessel Relief Valves, identified as 101; Under 40 CFR 60, Subpart GGG, pressure relief devices are considered affected sources at a petroleum refinery.

(hh) Cooling Towers, identified as 119.

(ii) Process units made up of vessels, piping, exchangers, identified as PENEX. Under 40 CFR 60, Subpart GGG, equipment associated with the sampling connection system is considered an affected source at a petroleum refinery.

(mm) Fugitive emissions from the Hydrotreater unit, Amine Unit, Sulfur Recovery Unit, Tail Gas Treatment Unit consisting of: Under 40 CFR 60, Subpart GGG, equipment associated with the sampling connection system is considered an affected source at a petroleum refinery. Under 40 CFR 63, Subpart CC, equipment leaks from storage vessels and equipment leaks associated with a bulk gasoline terminal are considered affected sources.

(1) pipeline Valves - Gas, identified as 090.
(2) pipeline Valves - Light Liquid, identified as 091.
(3) pipeline Valves - Heavy Liquid, identified as 092.

(4) pipeline Valves - Hydrogen, identified as 093.
(5) open Ended Valves, identified as 094.
(6) Miscellaneous (Sampling, Blowing, Purging, etc.), identified as 073.
(7) flanges, identified as 095.
(8) pump Seals Light Liquid, identified as 096.
(9) pump Seals Heavy Liquid, identified as 097.
(10) compressor Seals - Gas, identified as 098.
(11) compressor Seals - Heavy Liquid, identified as 099.
(12) drains, identified as 100.
(13) vessel Relief Valves, identified as 101.
(14) cooling Towers, identified as 119.

(qq) One (1) Low Sulfur Gasoline (LSG) Unit consisting of the following equipment:

(1) LSG Reactor Charge Heater (810-H101) approved for construction in 2008, with a maximum capacity of 5.985 MMBtu, combusting refinery fuel gas only, and venting to stack 128.

Under 40 CFR Part 60, Subpart Ja (currently under stay) the LSG Reactor Charge Heater is considered an affected facility.

(2) #5 Cooling Tower with a maximum capacity of 3,600 gpm approved for construction in 2008.

(3) LSG Unit components and drains (800 valves, 16 drains, and 5 pumps) approved for construction in 2008.

Under 40 CFR 63, Subpart CC, equipment leaks associated with a petroleum refinery are considered as an affected facility.

Under 40 CFR 60, Subpart QQQ, new and existing drains are considered affected facilities at a petroleum refinery.

Under 40 CFR 60, Subpart GGGa, valves are considered affected facilities at a petroleum refinery.

Under 40 CFR 61, Subpart FF new and existing drains are considered affected facilities for benzene waste operations.

(The information describing the process contained in this emissions unit description box is descriptive information and does not constitute enforceable conditions.)

Emission Limitations and Standards [326 IAC 2-7-5(1)]

D.4.1 General Provisions Relating to NSPS and NESHAP [326 IAC 12-1-1] [40 CFR Part 60, Subpart A] [326 IAC 20-1-1] [40 CFR Part 63, Subpart A]

(a) The provisions of 40 CFR Part 60, Subpart A - General Provisions, which are incorporated as 326 IAC 12-1-1, apply to a facility described in this section when such facility is defined in 40 CFR Part 60, Subpart GGG as an “affected facility,” except when otherwise specified in 40 CFR Part 60, Subpart GGG.

(b) The provisions of 40 CFR Part 63, Subpart A - General Provisions, which are incorporated as 326 IAC 20-1-1, apply to a facility described in this section when such facility is defined in 40 CFR Part 63, Subpart CC as an “affected facility,” except when otherwise specified in 40 CFR Part 63, Subpart CC.

(c) The provisions of 40 CFR Part 60, Subpart A - General Provisions, which are incorporated as 326 IAC 12-1-1, apply to a facility described in this section when such

facility is defined in 40 CFR Part 60, Subpart QQQ as an "affected facility," except when otherwise specified in 40 CFR Part 60, Subpart QQQ.

D.4.2 Equipment Leaks of VOC in Petroleum Refineries [326 IAC 12-1-1] [40 CFR Part 60, Subpart GGG]

Pursuant to 40 CFR 60.590 and 326 IAC 12-1-1, the provisions of 40 CFR 60, Subpart GGG - Standards of Performance for Equipment Leaks of VOC in Petroleum Refineries, which are incorporated by reference as 326 IAC 12-1-1, apply only to the equipments associated with the CCR unit (listed in Section D.1)**,** Hydrotreater Unit, Amine Unit, Sulfur Recovery Unit and TGTU, and PENEX unit because they were constructed or modified after January 4, 1983.

D.4.3 Petroleum Refineries NESHAP [326 IAC 20-1-1] [40 CFR Part 63, Subpart CC]

Pursuant to 40 CFR 63.640 and 326 IAC 20-1-1, the provisions of 40 CFR 63, Subpart CC - National Emission Standards for Hazardous Air Pollutants from Petroleum Refineries, which are incorporated by reference as 326 IAC 20-1-1, apply to affected facilities at the source because they are located at a plant site that is a major source as defined in section 112(a) of the Clean Air Act and emit or have equipment containing or contacting benzene which is one or more of the hazardous air pollutants listed in table 1 of this subpart.

D.4.4 VOC Emissions From Petroleum Refinery Wastewater Systems [326 IAC 12-1-1] [40 CFR Part 60, Subpart QQQ]

Pursuant to 40 CFR 60.690 and 326 IAC 12-1-1, the provisions of 40 CFR 60, Subpart QQQ - Standards of Performance for VOC Emissions From Petroleum Refinery Wastewater Systems, which are incorporated by reference as 326 IAC 12-1-1, apply to Oil/Water Separators and associated wastewater drains because these facilities are located at a petroleum refinery and are being constructed or modified after the rule applicability date of May 4, 1987.

D.4.5 Standards of Performance for Equipment Leaks of VOC in Petroleum Refineries [40 CFR 60.592] [326 IAC 12]

Pursuant to 40 CFR 60.592, following standards apply only to the equipment associated with the CCR unit (listed in Section D.1), Hydrotreater Unit, Amine Unit, Sulfur Recovery Unit and TGTU, and the PENEX unit:

(a) The Permittee subject to the provisions of this subpart shall comply with the requirements of 60.482-1 to 60.482-10 as soon as practicable, but no later than 180 days after initial startup.

(b) A Permittee may elect to comply with the requirements of 40 CFR 60.483-1 and 60.483-2.

(c) A Permittee may apply to IDEM, OAQ for a determination of equivalency for any means of emission limitation that achieves a reduction in emissions of VOC at least equivalent to the reduction in emissions of VOC achieved by the controls required in this subpart. In doing so, the Permittee shall comply with requirements of 40 CFR 60.484.

(d) The Permittee subject to the provisions of this subpart shall comply with the provisions of 40 CFR 60.485 except as provided in 40 CFR 60.593.

(e) The Permittee subject to the provisions of this subpart shall comply with the provisions of 40 CFR 60.486 and 40 CFR 60.487.

Pursuant to 40 CFR 60.593, following standards apply only to the equipment associated with the CCR unit (listed in Section D.1) and the PENEX unit:

(a) The Permittee subject to the provisions of this subpart may comply with the following exceptions to the provisions of Subpart VV.

(b) (1) Compressors in hydrogen service are exempt from the requirements of 60.592 if a Permittee demonstrates that a compressor is in hydrogen service.

(2) Each compressor is presumed not to be in hydrogen service unless a Permittee demonstrates that the piece of equipment is in hydrogen service. For a piece of equipment to be considered in hydrogen service, it must be determined that the percent hydrogen content can be reasonably expected always to exceed 50 percent by volume. For purposes of determining the percent hydrogen content in the process fluid that is contained in or contacts a compressor, procedures that conform to the general method described in ASTM E-260, E-168, or E-169 (incorporated by reference as specified in 40 CFR 60.17) shall be used.

(A) A Permittee may use engineering judgment rather than procedures in paragraph (b)(2) of this section to demonstrate that the percent content exceeds 50 percent by volume, provided the engineering judgment demonstrates that the content clearly exceeds 50 percent by volume. When a Permittee and the Administrator do not agree on whether a piece of equipment is in hydrogen service, however, the procedures in paragraph (b)(2) shall be used to resolve the disagreement.

(B) If a Permittee determines that a piece of equipment is in hydrogen service, the determination can be revised only after following the procedures in paragraph (b)(2).

(c) Any existing reciprocating compressor that becomes an affected facility under provisions of 40 CFR 60.14 or 40 CFR 60.15 is exempt from 60.482 (a), (b), (c), (d), (e), and (h) provided the Permittee demonstrates that recasting the distance piece or replacing the compressor are the only options available to bring the compressor into compliance with the provisions of 40 CFR 60.482 (a), (b), (c), (d), (e), and (h).

(d) A Permittee may use the following provision in addition to 40 CFR 60.485(e): Equipment is in light liquid service if the percent evaporated is greater than 10 percent at 150° C as determined by ASTM Method D-86 (incorporated by reference as specified in 60.18).

(e) Pumps in light liquid service and valves in gas/vapor and light liquid service within a procesic compounds of usually high molecular weight that consist of many repeated links, each link being a relatively light and simple molecule.

D.4.6 General Standards - NESHAP for Petroleum Refineries [326 IAC 20-10-1] [40 CFR Part 63, Subpart CC]

Pursuant to 40 CFR 63.642, the following shall apply to the source:

(a) Initial performance tests and initial compliance determinations shall be required only as specified in 40 CFR Part 63, Subpart CC.

(1) Performance tests and compliance determinations shall be conducted according to the schedule and procedures specified in this subpart.

(2) The Permittee shall notify the Administrator of the intention to conduct a performance test at least 30 days before the performance test is scheduled.

(3) Performance tests shall be conducted according to the provisions of 40 CFR 63.7(e) except that performance tests shall be conducted at maximum representative operating capacity for the process. During the performance test, a Permittee shall operate the control device at either maximum or minimum representative operating conditions for monitored control device parameters, whichever results in lower emission reduction.

(4) Data shall be reduced in accordance with the EPA-approved methods specified in the applicable section or, if other test methods are used, the data and methods shall be validated according to the protocol in Method 301 of appendix A of this part.

(b) The Permittee subject to this subpart shall keep copies of all applicable reports and records required by this subpart for at least 5 years except as otherwise specified in this subpart. All applicable records shall be maintained in such a manner that they can be

readily accessed within 24 hours. Records may be maintained in hard copy or computer-readable form including, but not limited to, on paper, microfilm, computer, floppy disk, magnetic tape, or microfiche.

(c) All reports required under this subpart shall be sent to the Administrator at the addresses listed in 40 CFR 63.13 of subpart A of this part. If acceptable to both the Administrator and the Permittee of a source, reports may be submitted on electronic media.

(d) The Permittee of an existing source subject to the requirements of this subpart shall control emissions of organic HAPs to the level represented by the equation in 40 CFR 63.642(g).

(e) The Permittee of a new source subject to the requirements of this subpart shall control emissions of organic HAPs to the level represented by the equation in 40 CFR 63.642(g).

(f) The Permittee of an existing source shall demonstrate compliance with the emission standard in 40 CFR 63.642 paragraph (g) by following the procedures specified in 40 CFR 63.642 paragraph (k) for all emission points, or by following the emissions averaging compliance approach specified in 40 CFR 63.642 paragraph (l) for specified emission points and the procedures specified in 40 CFR 63.642 paragraph (k) for all other emission points within the source.

(g) The Permittee of a new source shall demonstrate compliance with the emission standard in 40 CFR 63.642 paragraph (h) only by following the procedures in 40 CFR 63.642 paragraph (k). The Permittee of a new source may not use the emissions averaging compliance approach.

(h) The Permittee of an existing source may comply, and the Permittee of a new source shall comply, with the miscellaneous process vent provisions in 40 CFR 63.643 through 63.645, the storage vessel provisions in 40 CFR 63.646, the wastewater provisions in 40 CFR 63.647, and the gasoline loading rack provisions in 40 CFR 63.650 of this subpart.
(1) The Permittee using this compliance approach shall also comply with the requirements of 40 CFR 63.654 as applicable.
(2) The Permittee using this compliance approach is not required to calculate the annual emission rate specified in 40 CFR 63.642 paragraph (g).

(i) The Permittee of an existing source may elect to control some of the emission points within the source to different levels than specified under 40 CFR 63.643 through 63.647, 40 CFR 63.650 and 63.651 by using an emissions averaging compliance approach as long as the overall emissions for the source do not exceed the emission level specified in 40 CFR 63.642 paragraph (d). The Permittee using emissions averaging shall meet the requirements in 40 CFR 63.642 paragraphs (i)(1) and (i)(2).
(1) Calculate emission debits and credits for those emission points involved in the emissions average according to the procedures specified in 40 CFR 63.652; and
(2) Comply with the requirements of 40 CFR 63.652, 63.653, and 63.654, as applicable.

(j) A State may restrict the Permittee of an existing source to using only the procedures in 40 CFR 63.642 paragraph (k) to comply with the emission standard in 40 CFR 63.642 paragraph (g) of this section. Such a restriction would preclude the source from using an emissions averaging compliance approach.

D.4.7 Storage Vessel Provisions [326 IAC 20-10-1] [40 CFR Part 63, Subpart CC]

Pursuant to 40 CFR 63.646, the following shall apply to the storage vessels:

(a) Each Permittee of a Group 1 storage vessel subject to this subpart shall comply with the requirements of 40 CFR 63.119 through 63.121 except as provided in paragraphs (b) through (l) of this section.

(b) As used in this section, all terms not defined in 40 CFR 63.641 shall have the meaning given them in 40 CFR part 63, Subparts A or G. The Group 1 storage vessel definition presented in 40 CFR 63.641 shall apply in lieu of the Group 1 storage vessel definitions presented in tables 5 and 6 of 40 CFR 63.119 of Subpart G of this part.

(1) A Permittee may use good engineering judgment or test results to determine the stored liquid weight percent total organic HAP for purposes of group determination. Data, assumptions, and procedures used in the determination shall be documented.

(2) When a Permittee and IDEM, OAQ do not agree on whether the annual average weight percent organic HAP in the stored liquid is above or below 4 percent for a storage vessel at an existing source or above or below 2 percent for a storage vessel at a new source, Method 18 of 40 CFR part 60, appendix A shall be used.

(c) The following paragraphs do not apply to storage vessels at existing sources subject to this subpart: 40 CFR 63.119 (b)(5), (b)(6), (c)(2), and (d)(2).

(d) References shall apply as specified in 40 CFR 63.646 paragraphs (d)(1) through (d)(10).

(e) When complying with the inspection requirements of 40 CFR 63.120 of Subpart G of this part, the Permittee of storage vessels at existing sources subject to this subpart are not required to comply with the provisions for gaskets, slotted membranes, and sleeve seals.

(f) Paragraphs (f)(1), (f)(2), and (f)(3) of 40 CFR 63.646 apply to Group 1 storage vessels at existing sources.

(g) Failure to perform inspections and monitoring required by this section shall constitute a violation of the applicable standard of this subpart.

(h) References in 40 CFR 63.119 through 63.121 to 40 CFR 63.122(g)(1), 40 CFR 63.151, and references to initial notification requirements do not apply.

(i) References to the Implementation Plan in 40 CFR 63.120, paragraphs (d)(2) and (d)(3)(i) shall be replaced with the Notification of Compliance Status report.

(j) References to the Notification of Compliance Status report in 40 CFR 63.152(b) shall be replaced with 40 CFR 63.654(f).

(k) References to the Periodic Reports in 40 CFR 63.152(c) shall be replaced with 40 CFR 63.654(g).

(l) IDEM, OAQ can waive the notification requirements of 40 CFR 63.120(a)(5), 63.120(a)(6), 63.120(b)(10)(ii), and 63.120(b)(10)(iii) for all or some storage vessels at petroleum refineries subject to this subpart. IDEM, OAQ may also grant permission to refill storage vessels sooner than 30 days after submitting the notifications in 40 CFR 63.120(a)(6) or 63.120(b)(10)(iii) for all storage vessels at a refinery or for individual storage vessels on a case-by-case basis.

D.4.8 Equipment Leak Standards [326 IAC 20-10-1] [40 CFR Part 63, Subpart CC]

Pursuant to 40 CFR 63.648, the following standards shall apply to equipment leaks:

(a) The Permittee of an existing source subject to the provisions of this subpart shall comply with the provisions of 40 CFR part 60 Subpart VV and 40 CFR 63.648 paragraph (b) except as provided in 40 CFR 63.648 paragraphs (a)(1), (a)(2), and (c) through (i). The Permittee of a new source subject to the provisions of this subpart shall comply with Subpart H of this part except as provided in 40 CFR 63.648 paragraphs (c) through (i).

(1) For purposes of compliance with this section, the provisions of 40 CFR part 60, Subpart VV apply only to equipment in organic HAP service, as defined in 40 CFR 63.641 of this subpart.

(2) Calculation of percentage leaking equipment components for Subpart VV of 40 CFR part 60 may be done on a process unit basis or a sourcewide basis. Once the Permittee has decided, all subsequent calculations shall be on the same basis unless a permit change is made.

(b) The use of monitoring data generated before August 18, 1995 to qualify for less frequent monitoring of valves and pumps as provided under 40 CFR part 60 Subpart VV or Subpart H of this part and paragraph (c) of this section (i.e., quarterly or semiannually) is governed by the requirements of 40 CFR 63.648 paragraphs (b)(1) and (b)(2).

(1) Monitoring data must meet the test methods and procedures specified in 40 CFR 60.485(b) of 40 CFR part 60, Subpart VV or 40 CFR 63.180(b)(1) through (b)(5) of Subpart H of this part except for minor departures.

(2) Departures from the criteria specified in 40 CFR 60.485(b) of 40 CFR part 60 Subpart VV or 40 CFR 63.180(b)(1) through (b)(5) of Subpart H of this part or from the monitoring frequency specified in Subpart VV or in 40 CFR 63.648 paragraph (c) (such as every 6 weeks instead of monthly or quarterly) are minor and do not significantly affect the quality of the data. An example of a minor departure is monitoring at a slightly different frequency (such as every 6 weeks instead of monthly or quarterly). Failure to use a calibrated instrument is not considered a minor departure.

(c) In lieu of complying with the existing source provisions of paragraph (a) of 40 CFR 63.648, a Permittee may elect to comply with the requirements of 40 CFR 63.161 through 63.169, 63.171, 63.172, 63.175, 63.176, 63.177, 63.179, and 63.180 of Subpart H of this part except as provided in 40 CFR 63.648 paragraphs (c)(1) through (c)(10) and (e) through (i).

(d) Upon startup of new sources, the Permittee shall comply with 40 CFR 63.163(a)(1)(ii) of Subpart H of this part for light liquid pumps and 40 CFR 63.168(a)(1)(ii) of Subpart H of this part for gas/vapor and light liquid valves.

(e) For reciprocating pumps in heavy liquid service and agitators in heavy liquid service, owners and operators are not required to comply with the requirements in 40 CFR 63.169 of Subpart H of this part.

(f) Reciprocating pumps in light liquid service are exempt from 40 CFR 63.163 and 60.482 if recasting the distance piece or reciprocating pump replacement is required.

(g) Compressors in hydrogen service are exempt from the requirements of paragraphs (a) and (c) of 40 CFR 63.648 if a Permittee demonstrates that a compressor is in hydrogen service.

(1) Each compressor is presumed not to be in hydrogen service unless a Permittee demonstrates that the piece of equipment is in hydrogen service.

(2) For a piece of equipment to be considered in hydrogen service, it must be determined that the percentage hydrogen content can be reasonably expected always to exceed 50 percent by volume.

(i) For purposes of determining the percentage hydrogen content in the process fluid that is contained in or contacts a compressor, the Permittee shall use either:

(A) Procedures that conform to those specified in 40 CFR 60.593(b)(2) of 40 part 60, Subpart GGG.

(B) Engineering judgment to demonstrate that the percentage content exceeds 50 percent by volume, provided the engineering judgment demonstrates that the content clearly exceeds 50 percent by volume.

(aa) When a Permittee and the Administrator do not agree on whether a piece of equipment is in hydrogen service, the procedures in 40 CFR 63.648 paragraph (g)(2)(i)(A) of this section shall be used to resolve the disagreement.

(bb) If a Permittee determines that a piece of equipment is in hydrogen service, the determination can be revised only by following the procedures in 40 CFR 63.648 paragraph (g)(2)(i)(A) of this section.

(h) Each Permittee of a source subject to the provisions of this subpart must maintain all records for a minimum of 5 years.

(i) Reciprocating compressors are exempt from seal requirements if recasting the distance piece or compressor replacement is required.

D.4.9 Alternative Means of Emission Limitation: Connectors in gas/vapor service and light liquid service [326 IAC 20-10-1] [40 CFR Part 63, Subpart CC]

Pursuant to 40 CFR 63.649, the following emission limitations shall apply to connectors in gas/vapor service and light liquid service:

(a) If a Permittee elects to monitor valves according to the provisions of 40 CFR 63.648(c)(2)(ii), the Permittee shall implement one of the connector monitoring programs specified in 40 CFR 63.649 paragraphs (b), (c), or (d).

(b) Random 200 connector alternative. The Permittee shall implement a random sampling program for accessible connectors of 2.0 inches nominal diameter or greater. The program does not apply to inaccessible or unsafe-to-monitor connectors, as defined in 40 CFR 63.174 of Subpart H. The sampling program shall be implemented source-wide.

(1) Within the first 12 months after the phase III compliance date specified in 40 CFR 63.640(h), a sample of 200 connectors shall be randomly selected and monitored using Method 21 of 40 CFR part 60, appendix A.
(2) The instrument reading that defines a leak is 1,000 parts per million.
(3) When a leak is detected, it shall be repaired as soon as practicable, but no later than 15 calendar days after the leak is detected except as provided in 40 CFR 63.649 paragraph (e). A first attempt at repair shall be made no later than 5 calendar days after the leak is detected.
(4) If a leak is detected, the connector shall be monitored for leaks within the first 3 months after its repair.
(5) After conducting the initial survey required in 40 CFR 63.649 paragraph (b)(1), the Permittee shall conduct subsequent monitoring of connectors at the frequencies specified in 40 CFR 63.649 paragraphs (b)(5)(i) through (b)(5)(iv).
(6) Physical tagging of the connectors to indicate that they are subject to the monitoring provisions is not required. Connectors may be identified by the area or length of pipe and need not be individually identified.

(c) Connector inspection alternative. The Permittee shall implement a program to monitor all accessible connectors in gas/vapor service that are 2.0 inches (nominal diameter) or greater and inspect all accessible connectors in light liquid service that are 2 inches (nominal diameter) or greater as described in 40 CFR 63.649 paragraphs (c)(1) through (c)(7). The program does not apply to inaccessible or unsafe-to-monitor connectors.

(d) Subpart H program. The Permittee shall implement a program to comply with the provisions in 40 CFR 63.174 of this part.

(e) Delay of repair of connectors for which leaks have been detected is allowed if repair is not technically feasible by normal repair techniques without a process unit shutdown. Repair of this equipment shall occur by the end of the next process unit shutdown.

(1) Delay of repair is allowed for equipment that is isolated from the process and that does not remain in organic HAP service.
(2) Delay of repair for connectors is also allowed if:
(i) The Permittee determines that emissions of purged material resulting from immediate repair would be greater than the fugitive emissions likely to result from delay of repair, and
(ii) When repair procedures are accomplished, the purged material would be collected and destroyed or recovered in a control device.

(f) Any connector that is designated as an unsafe-to-repair connector is exempt from the requirements of 40 CFR 63.649 paragraphs (b)(3) and (b)(4), (c)(3) and (c)(4), or (d) if:
(1) The Permittee determines that repair personnel would be exposed to an immediate danger as a consequence of complying with 40 CFR 63.649 paragraphs (b)(3) and (b)(4), (c)(3) and (c)(4); or
(2) The connector will be repaired before the end of the next scheduled process unit shutdown.

(g) The Permittee shall maintain records to document that the connector monitoring or inspections have been conducted as required and to document repair of leaking connectors as applicable.

D.4.10 Emission Averaging Provisions [326 IAC 20-10-1] [40 CFR Part 63, Subpart CC]

Pursuant to 40 CFR 63.652, the Permittee of an existing source who seeks to comply with the emission standard in 63.642(g) by using emissions averaging according to 63.642(l) rather than following the provisions of sections 63.643 through 63.647, 63.650 and 63.651 shall comply with emission averaging provisions under section 63.652.

D.4.11 General Standards [40CFR 60.692-1] [326 IAC 12]

(a) Pursuant to 40 CFR 60.692-1(a), the Permittee shall comply with the requirements of 40 CFR 60.692-1 to 60.692-5 and with 40 CFR 60.693-1 and 60.693-2 for all facilities subject to the provisions of 40 CFR 60, Subpart QQQ as provided in 40 CFR 60.690, except during periods of startup, shutdown, or malfunction.

(b) Compliance with 40 CFR 60.692-1 to 60.692-5 and with 40 CFR 60.693-1 and 60.693-2 will be determined by review of records and reports, review of performance test results, and inspection using the methods and procedures specified in 40 CFR 60.696.

(c) Permission to use alternative means of emission limitation to meet the requirements of 40 CFR 60.692-2 through 60.692-4 may be granted as provided in 40 CFR 60.694.

(d) Pursuant to 40 CFR 60.692-1(d), the following units are not subject to the control requirements of 40 CFR 60, Subpart QQQ:

(1) Stormwater sewer systems;
(2) Ancillary equipment, which is physically separate from the wastewater system and does not come in contact with or store oily wastewater; and
(3) Non-contact cooling water systems.

The Permittee shall demonstrate compliance with the exclusions in paragraphs 40 CFR 60.692-1 (d)(1), (2), and (3) of this section as provided in 40 CFR 60.697(h), (i), and (j).

(e) The definitions in 40 CFR 60, Subpart QQQ, Section 60.691 are applicable to the Permittee.

D.4.12 Standards for Individual Drain Systems [40 CFR 60.692-2] [326 IAC 12]

Pursuant to 40 CFR 60.692-2, the Permittee shall comply with the following requirements:

(a) (1) Each drain shall be equipped with water seal controls.
(2) Each drain in active service shall be checked by visual or physical inspection initially and monthly thereafter for indications of low water levels or other conditions that would reduce the effectiveness of the water seal controls.
(3) Except as provided in paragraph (a)(4) of this section, each drain out of active service shall be checked by visual or physical inspection initially and weekly thereafter for indications of low
(4) As an alternative to the requirements in paragraph (a)(3) of this section, if an owner or operator elects to install a tightly sealed cap or plug over a drain that is out of service, inspections shall be conducted initially and semiannually to ensure caps or plugs are in place and properly installed.
(5) Whenever low water levels or missing or improperly installed caps or plugs are identified, water shall be added or first efforts at repair shall be made as soon as practicable, but not later than 24 hours after detection, except as provided in Sec. 60.692-6.

(b) (1) Junction boxes shall be equipped with a cover and may have an open vent pipe. The vent pipe shall be at least 90 cm (3 ft) in length and shall not exceed 10.2 cm (4 in) in diameter.
(2) Junction box covers shall have a tight seal around the edge and shall be kept in place at all times, except during inspection and maintenance.
(3) Junction boxes shall be visually inspected initially and semiannually hereafter to ensure that the cover is in place and to ensure that the cover has a tight seal around the edge.
(4) If a broken seal or gap is identified, first effort at repair shall be made as soon as practicable, but not later than 15 calendar days after the broken seal or gap is identified, except as provided in Sec. 60.692-6.

(c) (1) Sewer lines shall not be open to the atmosphere and shall be covered or enclosed in a manner so as to have no visual gaps or cracks in joints, seals, or other emission interfaces.
(2) The portion of each unburied sewer line shall be visually inspected initially and semiannually thereafter for indication of cracks, gaps, or other problems that could result in VOC emissions.
(3) Whenever cracks, gaps, or other problems are detected, repairs shall be made as soon as practicable, but not later than 15 calendar days after identification, except as provided in Sec. 60.692-6.

(d) Except as provided in paragraph (e) of this section, each modified or reconstructed individual drain system that has a catch basin in the existing configuration prior to May 4, 1987 shall be exempt from the provisions of this section.

(e) Refinery wastewater routed through new process drains and a new first common downstream junction box, either as part of a new individual drain system or an existing individual drain system, shall not be routed through a downstream catch basin.

D.4.13 Standards for Oil Water Separators [40CFR 60.692-3] [326 IAC 12]

Pursuant to 40 CFR 60.692-3, the Permittee shall comply with the following requirements:

(a) Each oil-water separator tank, slop oil tank, storage vessel, or other auxiliary equipment subject to the requirements of this subpart shall be equipped and operated with a fixed roof, which meets the following specifications, except as provided in paragraph (d) of this section or in 40 CFR 60.693-2.

(1) The fixed roof shall be installed to completely cover the separator tank, slop oil tank, storage vessel, or other auxiliary equipment with no separation between the roof and the wall.
(2) The vapor space under a fixed roof shall not be purged unless the vapor is directed to a control device.
(3) If the roof has access doors or openings, such doors or openings shall be gasketed, latched, and kept closed at all times during operation of the separator system, except during inspection and maintenance.
(4) Roof seals, access doors, and other openings shall be checked by visual inspection initially and semiannually thereafter to ensure that no cracks or gaps occur between the roof and wall and that access doors and other openings are closed and gasketed properly.
(5) When a broken seal or gasket or other problem is identified, first efforts at repair shall be made as soon as practicable, but not later than 15 calendar days after it is identified, except as provided in Sec. 60.692-6.

(b) Each oil-water separator tank or auxiliary equipment with a design capacity to treat more than 16 liters per second (250 gallons per minute (gpm)) of refinery wastewater shall, in addition to the requirements in paragraph (a) of this section, be equipped and operated with a closed vent system and control device, which meet the requirements of Sec. 60.692-5, except as provided in paragraph (c) of this section or in Sec. 60.693-2.

(c) (1) Each modified or reconstructed oil-water separator tank with a maximum design capacity to treat less than 38 liters per second (600 gpm) of refinery wastewater which was equipped and operated with a fixed roof covering the entire separator tank or a portion of the separator tank prior to May 4, 1987 shall be exempt from the requirements of paragraph (b) of this section, but shall meet the requirements of paragraph (a) of this section, or may elect to comply with paragraph (c)(2) of this section.
(2) The owner or operator may elect to comply with the requirements of paragraph (a) of this section for the existing fixed roof covering a portion of the separator tank and comply with the requirements for floating roofs in Sec. 60.693-2 for the remainder of the separator tank.

(d) Storage vessels, including slop oil tanks and other auxiliary tanks that are subject to the standards in Secs. 60.112, 60.112a, and 60.112b and associated requirements, 40 CFR part 60, subparts K, Ka, or Kb are not subject to the requirements of this section.

(e) Slop oil from an oil-water separator tank and oily wastewater from slop oil handling equipment shall be collected, stored, transported, recycled, reused, or disposed of in an enclosed system. Once slop oil is returned to the process unit or is disposed of, it is no longer within the scope of this subpart. Equipment used in handling slop oil shall be equipped with a fixed roof meeting the requirements of paragraph (a) of this section.

(f) Each oil-water separator tank, slop oil tank, storage vessel, or other auxiliary equipment that is required to comply with paragraph (a) of this section, and not paragraph (b) of this section, may be equipped with a pressure control valve as necessary for proper system operation. The pressure control valve shall be set at the maximum pressure necessary for proper system operation, but such that the value will not vent continuously.

D.4.14 Standards for Aggregate Facilities [40 CFR 60.692-4] [326 IAC 12]

Pursuant to 40 CFR 60.692-4, a new, modified, or reconstructed aggregate facility shall comply with the requirements of40 CFR 60.692-2 and 60.692-3.

D.4.15 Standards for Closed Vent Systems and Control Devices [40 CFR 60.692-5] [326 IAC 12]

Pursuant to 40 CFR 60.692-5, the Permittee shall comply with the following requirements:

(a) Enclosed combustion devices shall be designed and operated to reduce the VOC emissions vented to them with an efficiency of 95 percent or greater or to provide a

minimum residence time of 0.75 seconds at a minimum temperature of 816 deg.C (1,500 deg.F).

(b) Vapor recovery systems (for example, condensers and adsorbers) shall be designed and operated to recover the VOC emissions vented to them with an efficiency of 95 percent or greater.

(c) Flares used to comply with this subpart shall comply with the requirements of 40 CFR 60.18.

(d) Closed vent systems and control devices used to comply with provisions of this subpart shall be operated at all times when emissions may be vented to them.

(e) (1) Closed vent systems shall be designed and operated with no detectable emissions, as indicated by an instrument reading of less than 500 ppm above background, as determined during the initial and semiannual inspections by the methods specified in 40 CFR 60.696.

(2) Closed vent systems shall be purged to direct vapor to the control device.

(3) A flow indicator shall be installed on a vent stream to a control device to ensure that the vapors are being routed to the device.

(4) All gauging and sampling devices shall be gas-tight except when gauging or sampling is taking place.

(5) When emissions from a closed system are detected, first efforts at repair to eliminate the emissions shall be made as soon as practicable, but not later than 30 calendar days from the date the emissions are detected, except as provided in 40 CFR 60.692-6.

D.4.16 Standards for Closed Vent Systems and Control Devices [40 CFR 60.692-6] [326 IAC 12]

Pursuant to 40 CFR 60.692-6, delay of repair of facilities that are subject to 40 CFR 60, Subpart QQQ shall be allowed if the repair is technically impossible without a complete or partial refinery or process unit shutdown. Repair of such equipment shall occur before the end of the next refinery or process unit shutdown.

D.4.17 Standards for Closed Vent Systems and Control Devices [40 CFR 60.692-6] [326 IAC 12]

Pursuant to 40 CFR 60.692-7, delay of compliance of modified individual drain systems with ancillary downstream treatment components shall be allowed if compliance with the provisions of 40 CFR 60, subpart QQQ cannot be achieved without a refinery or process unit shutdown. Installation of equipment necessary to comply with the provisions of 40 CFR 60, Subpart QQQ shall occur no later than the next scheduled refinery or process unit shutdown.

D.4.18 Preventive Maintenance Plan [326 IAC 2-7-5(13)]

A Preventive Maintenance Plan, in accordance with Section B - Preventive Maintenance Plan, of this permit, is required for the affected facilities and their control device.

Compliance Determination Requirements

D.4.19 Performance Test Methods and Procedures [40 CFR 60.696] [326 IAC 12]

Pursuant to 40 CFR 60.696, the Permittee shall comply with the following requirements:

(a) Before using any equipment installed in compliance with the requirements of Sec. 60.692-2, Sec. 60.692-3, Sec. 60.692-4, Sec. 60.692-5, or Sec. 60.693, the owner or operator shall inspect such equipment for indications of potential emissions, defects, or other problems that may cause the requirements of this subpart not to be met. Points of inspection shall include, but are not limited to, seals, flanges, joints, gaskets, hatches, caps, and plugs.

(b) The Permittee of each source that is equipped with a closed vent system and control device as required in Sec. 60.692-5 (other than a flare) is exempt from Sec. 60.8 of the General Provisions and shall use Method 21 to measure the emission concentrations, using 500 ppm as the no detectable emission limit. The instrument shall be calibrated each day before using. The calibration gases shall be:

(1) Zero air (less than 10 ppm of hydrocarbon in air), and

(2) A mixture of either methane or n-hexane and air at a concentration of approximately, but less than, 10,000 ppm methane or n-hexane.

(c) The Permittee shall conduct a performance test initially, and at other times as requested by the Administrator, using the test methods and procedures in Sec. 60.18(f) to determine compliance of flares.

(d) After installing the control equipment required to meet Sec. 60.693-2(a) or whenever sources that have ceased to treat refinery wastewater for a period of 1 year or more are placed back into service, the owner or operator shall determine compliance with the standards in Sec. 60.693-2(a) as follows:

(1) The maximum gap widths and maximum gap areas between the primary seal and the separator wall and between the secondary seal and the separator wall shall be determined individually within 60 calendar days of the initial installation of the floating roof and introduction of refinery wastewater or 60 calendar days after the equipment is placed back into service using the following procedure when the separator is filled to the design operating level and when the roof is floating off the roof supports.
(i) Measure seal gaps around the entire perimeter of the separator in each place where a 0.32 cm (0.125 in.) diameter uniform probe passes freely (without forcing or binding against seal) between the seal and the wall of the separator and measure the gap width and perimetrical distance of each such location.
(ii) The total surface area of each gap described in (d)(1)(i) of this section shall be determined by using probes of various widths to measure accurately the actual distance from the wall to the seal and multiplying each such width by its respective perimetrical distance.
(iii) Add the gap surface area of each gap location for the primary seal and the secondary seal individually, divide the sum for each seal by the nominal perimeter of the separator basin and compare each to the maximum gap area as specified in Sec. 60.693-2.
(2) The gap widths and total gap area shall be determined using the procedure in paragraph (d)(1) of this section according to the following frequency:
(i) For primary seals, once every 5 years.
(ii) For secondary seals, once every year.

Compliance Monitoring Requirements [326 IAC 2-7-6(1)] [326 IAC 2-7-5(1)]

D.4.20 Monitoring, Recordkeeping, and Implementation Plan for Emissions Averaging [326 IAC 20-10-1] [40 CFR Part 63, Subpart CC]

Pursuant to 40 CFR 63.653, the following monitoring, recordkeeping and implementation plan for emission averaging shall apply to storage vessels, wastewater, gasoline loading rack only when the source elects emission averaging:

(a) For each emission point included in an emissions average, the Permittee shall perform testing, monitoring, recordkeeping, and reporting equivalent to that required for Group 1 emission points complying with 40 CFR 63.643 through 63.647, and 40 CFR 63.650 and 63.651. The specific requirements for storage vessels, wastewater, gasoline loading racks, and marine tank vessels are identified in 40 CFR 63.653 paragraphs (a)(3), (a)(4) and (a)(7).

(1) The source shall implement the following procedures for each storage vessel controlled with an internal floating roof, external roof, or a closed vent system with a control device, as appropriate to the control technique:
  (i) Perform the monitoring or inspection procedures in 40 CFR 63.646 of this subpart and 40 CFR 63.120 of Subpart G; and
  (ii) For closed vent systems with control devices, conduct an initial design evaluation as specified in 40 CFR 63.646 of this subpart and 40 CFR 63.120(d) of Subpart G.
(2) For each gasoline loading rack that is controlled, perform the testing and monitoring procedures specified in 40 CFR 63.425 and 63.427 of Subpart R of this part except 40 CFR 63.425(d) or 40 CFR 63.427(c).
(3) If an emission point in an emissions average is controlled using a pollution prevention measure or a device or technique for which no monitoring parameters or inspection procedures are specified in 40 CFR 63.643 through 63.647 and 40 CFR 63.650 and 63.651, the Permittee shall establish a site-specific monitoring parameter and shall submit the information specified in 40 CFR 63.654(h)(4) in the Implementation Plan.

(b) Records of all information required to calculate emission debits and credits and records required by 40 CFR 63.654 shall be retained for 5 years.

(c) Notifications of Compliance Status report, Periodic Reports, and other reports shall be submitted as required by 40 CFR 63.654.

(d) Each Permittee of an existing source who elects to comply with 40 CFR 63.654 (g) and (h) by using emissions averaging for any emission points shall submit an Implementation Plan.
(1) The Implementation Plan shall be submitted to the Administrator and approved prior to implementing emissions averaging. This information may be submitted in an operating permit application, in an amendment to an operating permit application, in a separate submittal, in a Notification of Compliance Status Report, in a Periodic Report or in any combination of these documents. If a Permittee submits the information specified in 40 CFR 63.653 paragraph (d)(2) at different times, and/or in different submittals, later submittals may refer to earlier submittals instead of duplicating the previously submitted information.
(2) The Implementation Plan shall include the information specified in 40 CFR 63.653 paragraphs (d)(2)(i) through (d)(2)(viii) for all points included in the average.
(3) The Administrator shall determine within 120 calendar days whether the Implementation Plan submitted presents sufficient information. The Administrator shall either approve the Implementation Plan, request changes, or request that the Permittee submit additional information. Once the Administrator receives sufficient information, the Administrator shall approve, disapprove, or request changes to the plan within 120 calendar days.

D.4.21 Monitoring Requirements [40 CFR 60.695] [326 IAC 12]

(a) Pursuant to 40 CFR 60.695, the Permittee shall install, calibrate, maintain, and operate according to manufacturer's specifications the following equipment, unless alternative monitoring procedures or requirements are approved for that facility by IDEM, OAQ.
(1) Where a thermal incinerator is used for VOC emission reduction, a temperature monitoring device equipped with a continuous recorder shall be used to measure the temperature of the gas stream in the combustion zone of the incinerator. The temperature monitoring device shall have an accuracy of +/- 1 percent of the temperature being measured, expressed in deg.C, or +/- 0.5 deg.C (0.9 deg.F), whichever is greater.
(2) Where a catalytic incinerator is used for VOC emission reduction, temperature monitoring devices, each equipped with a continuous recorder shall be used to measure the temperature in the gas stream immediately before and after the catalyst bed of the incinerator. The temperature monitoring devices shall have an

accuracy of +/- 1 percent of the temperature being measured, expressed in deg.C, or +/- 0.5 deg.C (0.9 deg.F), whichever is greater.

(3) Where a carbon adsorber is used for VOC emissions reduction, a monitoring device that continuously indicates and records the VOC concentration level or reading of organics in the exhaust gases of the control device outlet gas stream or inlet and outlet gas stream shall be used.

(i) For a carbon adsorption system that regenerates the carbon bed directly onsite, a monitoring device that continuously indicates and records the volatile organic compound concentration level or reading of organics in the exhaust gases of the control device outlet gas stream or inlet and outlet gas stream shall be used.

(ii) For a carbon adsorption system that does not regenerate the carbon bed directly onsite in the control device (e.g., a carbon canister), the concentration level of the organic compounds in the exhaust vent stream from the carbon adsorption system shall be monitored on a regular schedule, and the existing carbon shall be replaced with fresh carbon immediately when carbon breakthrough is indicated. The device shall be monitored on a daily basis or at intervals no greater than 20 percent of the design carbon replacement interval, whichever is greater. As an alternative to conducting this monitoring, an owner or operator may replace the carbon in the carbon adsorption system with fresh carbon at a regular predetermined time interval that is less than the carbon replacement interval that is determined by the maximum design flow rate and organic concentration in the gas stream vented to the carbon adsorption system.

(4) Where a flare is used for VOC emission reduction, the owner or operator shall comply with the monitoring requirements of 40 CFR 60.18(f)(2).

(b) Where a VOC recovery device other than a carbon adsorber is used to meet the requirements specified in Sec. 60.692-5(a), the owner or operator shall provide to the Administrator information describing the operation of the control device and the process parameter(s) that would indicate proper operation and maintenance of the device. The Administrator may request further information and will specify appropriate monitoring procedures or requirements.

(c) An alternative operational or process parameter may be monitored if it can be demonstrated that another parameter will ensure that the control device is operated in conformance with these standards and the control device's design specifications.

Record Keeping and Reporting Requirement [326 IAC 2-7-5(3)] [326 IAC 2-7-19]

D.4.22 Reporting and Record Keeping Requirements [326 IAC 20-10-1] [40 CFR Part 63.654, Subpart CC]

(a) Each Permittee subject to the gasoline loading rack provisions in 40 CFR 63.650 shall comply with the recordkeeping and reporting provisions in 40 CFR 63.428 (b) and (c), (g)(1), and (h)(1) through (h)(3) of Subpart R of this part (listed in section D.1). These requirements are summarized in table 4 of this subpart. There are no additional reporting and recordkeeping requirements for gasoline loading racks under this subpart unless a loading rack is included in an emissions average. Recordkeeping and reporting for emissions averages are specified in 40 CFR 63.653 and in 40 CFR 63.654 paragraphs (f)(5) and (g)(8).

(b) Each Permittee subject to the equipment leaks standards in 40 CFR 63.648 shall comply with the recordkeeping and reporting provisions in 40 CFR 63.654 paragraphs (d)(1) through (d)(6).

(1) 40 CFR 60.486 and 60.487 of Subpart VV of part 60 except as specified in 40 CFR 63.654 paragraph (d)(1)(i); or 40 CFR 63.181 and 63.182 of Subpart H of this part except for 40 CFR 63.182(b), (c)(2), and (c)(4).

(i) The signature of the Permittee (or designate) whose decision it was that a repair could not be effected without a process shutdown is not required to be recorded. Instead, the name of the person whose decision it was that a repair could not be effected without a process shutdown shall be recorded and retained for 2 years.

(2) The Notification of Compliance Status report required by 40 CFR 63.182(c) of Subpart H and the initial semiannual report required by 40 CFR 60.487(b) of 40 CFR part 60, Subpart VV shall be submitted within 150 days of the compliance date specified in 40 CFR 63.640(h); the requirements of Subpart H of this part are summarized in table 3 of this subpart.

(3) A Permittee who determines that a compressor qualifies for the hydrogen service exemption in 40 CFR 63.648 shall also keep a record of the demonstration required by 40 CFR 63.648.

(4) A Permittee must keep a list of identification numbers for valves that are designated as leakless per 40 CFR 63.648(c)(10).

(5) A Permittee must identify, either by list or location (area or refining process unit), equipment in organic HAP service less than 300 hours per year within refining process units subject to this subpart.

(6) A Permittee must keep a list of reciprocating pumps and compressors determined to be exempt from seal requirements as per 40 CFR 63.648 (f) and (i).

(c) Each Permittee of a source subject to this subpart shall submit the reports listed in 40 CFR 63.654 paragraphs (e)(1) through (e)(3) except as provided in 40 CFR 63.654 paragraph (h)(5), and shall keep records as described in 40 CFR 63.654 paragraph (i).

(1) A Notification of Compliance Status report as described in 40 CFR 63.654 paragraph (f);

(2) Periodic Reports as described in 40 CFR 63.654 paragraph (g); and

(3) Other reports as described in 40 CFR 63.654 paragraph (h).

(d) Each Permittee of a source subject to this subpart shall submit a Notification of Compliance Status report within 150 days after the compliance dates specified in 40 CFR 63.640(h) with the exception of Notification of Compliance Status reports submitted to comply with 40 CFR 63.640(l)(3) and for storage vessels subject to the compliance schedule specified in 40 CFR 63.640(h)(4). Notification of Compliance Status reports required by 40 CFR 63.640(l)(3) and for storage vessels subject to the compliance dates specified in 40 CFR 63.640(h)(4) shall be submitted according to 40 CFR 63.654 paragraph (f)(6). This information may be submitted in an operating permit application, in an amendment to an operating permit application, in a separate submittal, or in any combination of the three. If the required information has been submitted before the date 150 days after the compliance date specified in 40 CFR 63.640(h), a separate Notification of Compliance Status report is not required within 150 days after the compliance dates specified in 40 CFR 63.640(h). If a Permittee submits the information specified in 40 CFR 63.654 paragraphs (f)(1) through (f)(5) at different times, and/or in different submittals, later submittals may refer to earlier submittals instead of duplicating and resubmitting the previously submitted information. Each Permittee of a gasoline loading rack classified under Standard Industrial Classification Code 2911 located within a contiguous area and under common control with a petroleum refinery subject to the standards of this subpart shall submit the Notification of Compliance Status report required by Subpart R of this part within 150 days after the compliance dates specified in 40 CFR 63.640(h) of this subpart.

(1) The Notification of Compliance Status report shall include the information specified in 40 CFR 63.654 paragraphs (f)(1)(i) and (f)(1)(v).

(i) For storage vessels, this report shall include the information specified in 40 CFR 63.654 paragraphs (f)(1)(i)(A) through (f)(1)(i)(D).

(A) Identification of each storage vessel subject to this subpart, and for each Group 1 storage vessel subject to this subpart, the information specified in 40 CFR 63.654 paragraphs (f)(1)(i)(A)(1) through (f)(1)(i)(A)(3). This information is to be revised each time a Notification of Compliance Status report is submitted for a

storage vessel subject to the compliance schedule specified in 40 CFR 63.640(h)(4) or to comply with 40 CFR 63.640(l)(3).

(aa) For each Group 1 storage vessel complying with 40 CFR 63.646 that is not included in an emissions average, the method of compliance (i.e., internal floating roof, external floating roof, or closed vent system and control device).

(bb) For storage vessels subject to the compliance schedule specified in 40 CFR 63.640(h)(4) that are not complying with 40 CFR 63.646, the anticipated compliance date.

(cc) For storage vessels subject to the compliance schedule specified in 40 CFR 63.640(h)(4) that are complying with 40 CFR 63.646 and the Group 1 storage vessels described in 40 CFR 63.640(l), the actual compliance date.

(B) If a closed vent system and a control device other than a flare is used to comply with 40 CFR 63.646 the Permittee shall submit:

(aa) A description of the parameter or parameters to be monitored to ensure that the control device is being properly operated and maintained, an explanation of the criteria used for selection of that parameter (or parameters), and the frequency with which monitoring will be performed; and either

(bb) The design evaluation documentation specified in 40 CFR 63.120(d)(1)(i) of Subpart G, if the Permittee elects to prepare a design evaluation; or

(cc) If the Permittee elects to submit the results of a performance test, identification of the storage vessel and control device for which the performance test will be submitted, and identification of the emission point(s) that share the control device with the storage vessel and for which the performance test will be conducted.

(C) If a closed vent system and control device other than a flare is used, the Permittee shall submit:

(aa) The operating range for each monitoring parameter. The specified operating range shall represent the conditions for which the control device is being properly operated and maintained.

(bb) If a performance test is conducted instead of a design evaluation, results of the performance test demonstrating that the control device achieves greater than or equal to the required control efficiency. A performance test conducted prior to the compliance date of this subpart can be used to comply with this requirement, provided that the test was conducted using EPA methods and that the test conditions are representative of current operating practices.

(D) If a closed vent system and a flare is used, the Permittee shall submit:

(aa) Flare design (e.g., steam-assisted, air-assisted, or nonassisted);

(bb) All visible emission readings, heat content determinations, flow rate measurements, and exit velocity determinations made during the compliance determination required by 40 CFR 63.120(e) of Subpart G of this part; and

(cc) All periods during the compliance determination when the pilot flame is absent.

(ii) For equipment leaks complying with 40 CFR 63.648(c) (i.e., complying with the requirements of Subpart H of this part), the Notification of Compliance Report Status report information required by 40 CFR 63.182(c) of Subpart H and whether the percentage of leaking valves will be reported on a process unit basis or a sourcewide basis.

(2) If initial performance tests are required by 40 CFR 63.643 through 63.653 of this subpart, the Notification of Compliance Status report shall include one complete test report for each test method used for a particular source.

(i) For additional tests performed using the same method, the results specified in 40 CFR 63.654 paragraph (f)(1) shall be submitted, but a complete test report is not required.

(ii) A complete test report shall include a sampling site description, description of sampling and analysis procedures and any modifications to standard procedures, quality assurance procedures, record of operating conditions during the test, record of preparation of standards, record of calibrations, raw data sheets for field sampling, raw data sheets for field and laboratory analyses, documentation of calculations, and any other information required by the test method.

(iii) Performance tests are required only if specified by 40 CFR 63.643 through 63.653 of this subpart. Initial performance tests are required for some kinds of emission points and controls. Periodic testing of the same emission point is not required.

(3) For each monitored parameter for which a range is required to be established under 40 CFR 63.120(d) of Subpart G of this part for storage vessels, the Notification of Compliance Status report shall include the information in 40 CFR 63.654 paragraphs (f)(3)(i) through (f)(3)(iii).

(i) The specific range of the monitored parameter(s) for each emission point;

(ii) The rationale for the specific range for each parameter for each emission point, including any data and calculations used to develop the range and a description of why the range ensures compliance with the emission standard.

(A) If a performance test is required by this subpart for a control device, the range shall be based on the parameter values measured during the performance test supplemented by engineering assessments and manufacturer's recommendations. Performance testing is not required to be conducted over the entire range of permitted parameter values.

(B) If a performance test is not required by this subpart for a control device, the range may be based solely on engineering assessments and manufacturers' recommendations.

(iii) A definition of the source's operating day for purposes of determining daily average values of monitored parameters. The definition shall specify the times at which an operating day begins and ends.

(4) Results of any continuous monitoring system performance evaluations shall be included in the Notification of Compliance Status report.

(5) For emission points included in an emissions average, the Notification of Compliance Status report shall include the values of the parameters needed for input to the emission credit and debit equations in 40 CFR 63.652(g) and (h), calculated or measured according to the procedures in 40 CFR 63.652(g) and (h), and the resulting credits and debits for the first quarter of the year. The first quarter begins on the compliance date specified in 40 CFR 63.640.

(6) Notification of Compliance Status reports required by 40 CFR 63.640(l)(3) and for storage vessels subject to the compliance dates specified in 40 CFR 63.640(h)(4) shall be submitted no later than 60 days after the end of the 6-month period during which the change or addition was made that resulted in the Group 1

emission point or the existing Group 1 storage vessel was brought into compliance, and may be combined with the periodic report. Six-month periods shall be the same 6-month periods specified in 40 CFR 63.654 paragraph (g). The Notification of Compliance Status report shall include the information specified in 40 CFR 63.654 paragraphs (f)(1) through (f)(5). This information may be submitted in an operating permit application, in an amendment to an operating permit application, in a separate submittal, as part of the periodic report, or in any combination of these four. If the required information has been submitted before the date 60 days after the end of the 6-month period in which the addition of the Group 1 emission point took place, a separate Notification of Compliance Status report is not required within 60 days after the end of the 6-month period. If a Permittee submits the information specified in 40 CFR 63.654 paragraphs (f)(1) through (f)(5) at different times, and/or in different submittals, later submittals may refer to earlier submittals instead of duplicating and resubmitting the previously submitted information.

(e) The Permittee of a source subject to this subpart shall submit Periodic Reports no later than 60 days after the end of each 6- month period when any of the compliance exceptions specified in 40 CFR 63.654 paragraphs (g)(1) through (g)(6) occur. The first 6-month period shall begin on the date the Notification of Compliance Status report is required to be submitted. A Periodic Report is not required if none of the compliance exceptions specified in 40 CFR 63.654 paragraphs (g)(1) through (g)(6) occurred during the 6-month period unless emissions averaging is utilized. Quarterly reports must be submitted for emission points included in emissions averages, as provided in 40 CFR 63.654 paragraph (g)(8). A Permittee may submit reports required by other regulations in place of or as part of the Periodic Report required by this paragraph if the reports contain the information required by paragraphs (g)(1) through (g)(8) of 40 CFR 63.654.

(1) For storage vessels, Periodic Reports shall include the information specified for Periodic Reports in 40 CFR 63.654 paragraphs (g)(2) through (g)(5) except that information related to gaskets, slotted membranes, and sleeve seals is not required for storage vessels that are part of an existing source.

(2) A Permittee who elects to comply with 40 CFR 63.646 by using a fixed roof and an internal floating roof or by using an external floating roof converted to an internal floating roof shall submit the results of each inspection conducted in accordance with 40 CFR 63.120(a) of subpart G of this part in which a failure is detected in the control equipment.

(i) For vessels for which annual inspections are required under 40 CFR 63.120(a)(2)(i) or (a)(3)(ii) of Subpart G of this part, the specifications and requirements listed in 40 CFR 63.654 paragraphs (g)(2)(i)(A) through (g)(2)(i)(C) apply.

(A) A failure is defined as any time in which the internal floating roof is not resting on the surface of the liquid inside the storage vessel and is not resting on the leg supports; or there is liquid on the floating roof; or the seal is detached from the internal floating roof; or there are holes, tears, or other openings in the seal or seal fabric; or there are visible gaps between the seal and the wall of the storage vessel.

(B) Except as provided in 40 CFR 63.654 paragraph (g)(2)(i)(C), each Periodic Report shall include the date of the inspection, identification of each storage vessel in which a failure was detected, and a description of the failure. The Periodic Report shall also describe the nature of and date the repair was made or the date the storage vessel was emptied.

(C) If an extension is utilized in accordance with 40 CFR 63.120(a)(4) of Subpart G of this part, the Permittee shall, in the next Periodic Report, identify the vessel; include the documentation specified in 40 CFR 63.120(a)(4) of Subpart G of this part; and describe

the date the storage vessel was emptied and the nature of and date the repair was made.

(ii) For vessels for which inspections are required under 40 CFR 63.120(a)(2)(ii), (a)(3)(i), or (a)(3)(iii) of Subpart G of this part (i.e., internal inspections), the specifications and requirements listed in 40 CFR 63.654 paragraphs (g)(2)(ii)(A) and (g)(2)(ii)(B) apply.

(A) A failure is defined as any time in which the internal floating roof has defects; or the primary seal has holes, tears, or other openings in the seal or the seal fabric; or the secondary seal (if one has been installed) has holes, tears, or other openings in the seal or the seal fabric; or, for a storage vessel that is part of a new source, the gaskets no longer close off the liquid surface from the atmosphere; or, for a storage vessel that is part of a new source, the slotted membrane has more than a 10 percent open area.

(B) Each Periodic Report shall include the date of the inspection, identification of each storage vessel in which a failure was detected, and a description of the failure. The Periodic Report shall also describe the nature of and date the repair was made.

(3) A Permittee who elects to comply with 40 CFR 63.646 by using an external floating roof shall meet the periodic reporting requirements specified in 40 CFR 63.654 paragraphs (g)(3)(i) through (g)(3)(iii).

(i) The Permittee shall submit, as part of the Periodic Report, documentation of the results of each seal gap measurement made in accordance with 40 CFR 63.120(b) of Subpart G of this part in which the seal and seal gap requirements of 40 CFR 63.120(b)(3), (b)(4), (b)(5), or (b)(6) of Subpart G of this part are not met. This documentation shall include the information specified in 40 CFR 63.654 paragraphs (e)(3)(i)(A) through (e)(3)(i)(D).

(A) The date of the seal gap measurement.

(B) The raw data obtained in the seal gap measurement and the calculations described in 40 CFR 63.120(b)(3) and (b)(4) of Subpart G of this part.

(C) A description of any seal condition specified in 40 CFR 63.120(b)(5) or (b)(6) of Subpart G of this part that is not met.

(D) A description of the nature of and date the repair was made, or the date the storage vessel was emptied.

(ii) If an extension is utilized in accordance with 40 CFR 63.120(b)(7)(ii) or (b)(8) of Subpart G of this part, the Permittee shall, in the next Periodic Report, identify the vessel; include the documentation specified in 40 CFR 63.120(b)(7)(ii) or (b)(8) of Subpart G of this part, as applicable; and describe the date the vessel was emptied and the nature of and date the repair was made.

(iii) The Permittee shall submit, as part of the Periodic Report, documentation of any failures that are identified during visual inspections required by 40 CFR 63.120(b)(10) of Subpart G of this part. This documentation shall meet the specifications and requirements in 40 CFR 63.654 paragraphs (e)(3)(iii)(A) and (e)(3)(iii)(B).

(A) A failure is defined as any time in which the external floating roof has defects; or the primary seal has holes or other openings in the seal or the seal fabric; or the secondary seal has holes, tears, or other openings in the seal or the seal fabric; or, for a storage vessel that is part of a new source, the gaskets no longer close off the liquid surface from the atmosphere; or, for a storage vessel that is part of a new source, the slotted membrane has more than 10 percent open area.

(B) Each Periodic Report shall include the date of the inspection, identification of each storage vessel in which a failure was

detected, and a description of the failure. The Periodic Report shall also describe the nature of and date the repair was made.

(4) A Permittee who elects to comply with 40 CFR 63.646 by using an external floating roof converted to an internal floating roof shall comply with the periodic reporting requirements of paragraph (e)(2) of 40 CFR 63.654.

(5) A Permittee who elects to comply with 40 CFR 63.646 by installing a closed vent system and control device shall submit, as part of the next Periodic Report, the information specified in 40 CFR 63.654 paragraphs (g)(5)(i) through (g)(5)(iii).

(i) The Periodic Report shall include the information specified in 40 CFR 63.654 paragraphs (g)(5)(i)(A) and (g)(5)(i)(B) for those planned routine maintenance operations that would require the control device not to meet the requirements of 40 CFR 63.119(e)(1) or (e)(2) of Subpart G of this part, as applicable.

(A) A description of the planned routine maintenance that is anticipated to be performed for the control device during the next 6 months. This description shall include the type of maintenance necessary, planned frequency of maintenance, and lengths of maintenance periods.

(B) A description of the planned routine maintenance that was performed for the control device during the previous 6 months. This description shall include the type of maintenance performed and the total number of hours during those 6 months that the control device did not meet the requirements of 40 CFR 63.119 (e)(1) or (e)(2) of Subpart G of this part, as applicable, due to planned routine maintenance.

(ii) If a control device other than a flare is used, the Periodic Report shall describe each occurrence when the monitored parameters were outside of the parameter ranges documented in the Notification of Compliance Status report. The description shall include: Identification of the control device for which the measured parameters were outside of the established ranges, and causes for the measured parameters to be outside of the established ranges.

(iii) If a flare is used, the Periodic Report shall describe each occurrence when the flare does not meet the general control device requirements specified in 40 CFR 63.11(b) of Subpart A of this part and shall include: Identification of the flare that does not meet the general requirements specified in 40 CFR 63.11(b) of Subpart A of this part, and reasons the flare did not meet the general requirements specified in 40 CFR 63.11(b) of Subpart A of this part.

(6) For miscellaneous process vents for which continuous parameter monitors are required by this subpart, periods of excess emissions shall be identified in the Periodic Reports and shall be used to determine compliance with the emission standards.

(i) Period of excess emission means any of the following conditions:

(A) An operating day when the daily average value of a monitored parameter, except presence of a flare pilot flame, is outside the range specified in the Notification of Compliance Status report. Monitoring data recorded during periods of monitoring system breakdown, repairs, calibration checks and zero (low-level) and high-level adjustments shall not be used in computing daily average values of monitored parameters.

(B) An operating day when all pilot flames of a flare are absent.

(C) An operating day when monitoring data required to be recorded in paragraphs (g)(3) (i) and (ii) of this section are available for less than 75 percent of the operating hours.

(D) For data compression systems approved under paragraph (f)(5)(iii) of this section, an operating day when the monitor operated for less than 75 percent of the operating hours or a day when less than 18 monitoring values were recorded.

(ii) For miscellaneous process vents, excess emissions shall be reported for the operating parameters specified in table 10 of this subpart unless other site-specific parameter(s) have been approved by the operating permit authority.

(iii) Periods of startup and shutdown that meet the definition of 40 CFR 63.641, and malfunction that meet the definition in 40 CFR 63.2 and periods of performance testing and monitoring system calibration shall not be considered periods of excess emissions. Malfunctions may include process unit, control device, or monitoring system malfunctions.

(7) If a performance test for determination of compliance for a new emission point subject to this subpart or for an emission point that has changed from Group 2 to Group 1 is conducted during the period covered by a Periodic Report, the results of the performance test shall be included in the Periodic Report.

(i) Results of the performance test shall include the percentage of emissions reduction or outlet pollutant concentration reduction (whichever is needed to determine compliance) and the values of the monitored operating parameters.

(ii) The complete test report shall be maintained onsite.

(8) The Permittee of a source shall submit quarterly reports for all emission points included in an emissions average.

(i) The quarterly reports shall be submitted no later than 60 calendar days after the end of each quarter. The first report shall be submitted with the Notification of Compliance Status report no later than 150 days after the compliance date specified in 40 CFR 63.640.

(ii) The quarterly reports shall include:

(A) The information specified in this paragraph and in 40 CFR 63.654 paragraphs (g)(2) through (g)(7) for all storage vessels included in an emissions average;

(B) The information required to be reported by 40 CFR 63.428 (h)(1), (h)(2), and (h)(3) for each gasoline loading rack included in an emissions average, unless this information has already been submitted in a separate report;

(C) Any information pertaining to each wastewater stream included in an emissions average that the source is required to report under the Implementation Plan for the source;

(D) The credits and debits calculated each month during the quarter;

(E) A demonstration that debits calculated for the quarter are not more than 1.30 times the credits calculated for the quarter, as required under 40 CFR 63.652(e)(4);

(F) The values of any inputs to the credit and debit equations in 40 CFR 63.652 (g) and (h) that change from month to month during the quarter or that have changed since the previous quarter; and

(G) Any other information the source is required to report under the Implementation Plan for the source.

(f) Other reports shall be submitted as specified in Subpart A of this part and as follows:

(1) Reports of startup, shutdown, and malfunction required by 40 CFR 63.10(d)(5). Records and reports of startup, shutdown, and malfunction are not required if they pertain solely to Group 2 emission points, as defined in 40 CFR 63.641, that are not included in an emissions average. For purposes of this paragraph, startup and shutdown shall have the meaning defined in 40 CFR 63.641, and malfunction shall have the meaning defined in 40 CFR 63.2; and

(2) For storage vessels, notifications of inspections as specified in 40 CFR 63.654 paragraphs (h)(2)(i) and (h)(2)(ii);

(i) In order to afford the Administrator the opportunity to have an observer present, the Permittee shall notify the Administrator of the refilling of each Group 1 storage vessel that has been emptied and degassed.

(A) Except as provided in 40 CFR 63.654 paragraphs (h)(2)(i) (B) and (C), the Permittee shall notify the Administrator in writing at least 30 calendar days prior to filling or refilling of each storage vessel with organic HAP's to afford the Administrator the opportunity to inspect the storage vessel prior to refilling.

(B) Except as provided in 40 CFR 63.654 paragraph (h)(2)(i)(C), if the internal inspection required by 40 CFR 63.120(a)(2), 63.120(a)(3), or 63.120(b)(10) of Subpart G of this part is not planned and the Permittee could not have known about the inspection 30 calendar days in advance of refilling the vessel with organic HAP's, the Permittee shall notify the Administrator at least 7 calendar days prior to refilling of the storage vessel. Notification may be made by telephone and immediately followed by written documentation demonstrating why the inspection was unplanned. This notification, including the written documentation, may also be made in writing and sent so that it is received by the Administrator at least 7 calendar days prior to the refilling.

(C) The State or local permitting authority can waive the notification requirements of paragraphs (h)(2)(i)(A) and/or (h)(2)(i)(B) of 40 CFR 63.654 for all or some storage vessels at petroleum refineries subject to this subpart. The State or local permitting authority may also grant permission to refill storage vessels sooner than 30 days after submitting the notification required by paragraph (h)(2)(i)(A) of 40 CFR 63.654, or sooner than 7 days after submitting the notification required by paragraph (h)(2)(i)(B) of 40 CFR 63.654 for all storage vessels, or for individual storage vessels on a case-by-case basis.

(ii) In order to afford the Administrator the opportunity to have an observer present, the Permittee of a storage vessel equipped with an external floating roof shall notify the Administrator of any seal gap measurements. The notification shall be made in writing at least 30 calendar days in advance of any gap measurements required by 40 CFR 63.120 (b)(1) or (b)(2) of Subpart G of this part. The State or local permitting authority can waive this notification requirement for all or some storage vessels subject to the rule or can allow less than 30 calendar days' notice.

(3) For owners or operators of sources required to request approval for a nominal control efficiency for use in calculating credits for an emissions average, the information specified in 40 CFR 63.652(h).

(4) A Permittee may request approval to use alternatives to the continuous operating parameter monitoring and recordkeeping provisions listed in 40 CFR 63.654 paragraph (i).

(i) Requests shall be submitted with the Application for Approval of Construction or Reconstruction for new sources and no later than 18 months prior to the compliance date for existing sources. The information may be submitted in an operating permit application, in an amendment to an operating permit application, or in a separate submittal. Requests shall contain the information specified in 40 CFR 63.654 paragraphs (h)(5)(iii) through (h)(5)(iv), as applicable.

(ii) The provisions in 40 CFR 63.8(f)(5)(i) of Subpart A of this part shall govern the review and approval of requests.

(iii) A Permittee may request approval to use an automated data compression recording system that does not record monitored operating

parameter values at a set frequency (for example, once every hour) but records all values that meet set criteria for variation from previously recorded values.

(A) The requested system shall be designed to:

(1) Measure the operating parameter value at least once every hour.

(2) Record at least 24 values each day during periods of operation.

(3) Record the date and time when monitors are turned off or on.

(4) Recognize unchanging data that may indicate the monitor is not functioning properly, alert the operator, and record the incident.

(5) Compute daily average values of the monitored operating parameter based on recorded data.

(B) The request shall contain a description of the monitoring system and data compression recording system including the criteria used to determine which monitored values are recorded and retained, the method for calculating daily averages, and a demonstration that the system meets all criteria of paragraph (h)(5)(iii)(A) of 40 CFR 63.654.

(iv) A Permittee may request approval to use other alternative monitoring systems according to the procedures specified in 40 CFR 63.8(f) of Subpart A of this part.

(5) The Permittee shall submit the information specified in 40 CFR 63.654 paragraphs (h)(6)(i) through (h)(6)(iii), as applicable. For existing sources, this information shall be submitted in the initial Notification of Compliance Status report. For a new source, the information shall be submitted with the application for approval of construction or reconstruction required by 40 CFR 63.5(d) of Subpart A of this part. The information may be submitted in an operating permit application, in an amendment to an operating permit application, or in a separate submittal.

(i) The determination of applicability of this subpart to petroleum refining process units that are designed and operated as flexible operation units.

(ii) The determination of applicability of this subpart to any storage vessel for which use varies from year to year.

(iii) The determination of applicability of this subpart to any distillation unit for which use varies from year to year.

(g) Recordkeeping.

(1) The Permittee subject to the storage vessel provisions in 40 CFR 63.646 shall keep the records specified in 40 CFR 63.123 of Subpart G of this part except as specified in 40 CFR 63.654 paragraphs (i)(1)(i) through (i)(1)(iv).

(i) Records related to gaskets, slotted membranes, and sleeve seals are not required for storage vessels within existing sources.

(ii) All references to 40 CFR 63.122 in 40 CFR 63.123 of Subpart G of this part shall be replaced with 40 CFR 63.654(e).

(iii) All references to 40 CFR 63.150 in 40 CFR 63.123 of Subpart G of this part shall be replaced with 40 CFR 63.652.

(iv) If a storage vessel is determined to be Group 2 because the weight percent total organic HAP of the stored liquid is less than or equal to 4 percent for existing sources or 2 percent for new sources, a record of any data, assumptions, and procedures used to make this determination shall be retained.

(2) Each Permittee required to report the results of performance tests under 40 CFR 63.654 paragraphs (f) and (g)(7) shall retain a record of all reported results as

well as a complete test report, as described in 40 CFR 63.654 paragraph (f)(2)(ii) for each emission point tested.

(3) All other information required to be reported under 40 CFR 63.654 paragraphs (a) through (h) shall be retained for 5 years.

(h) To document compliance with Condition D.4.20, if the Permittee uses emissions averaging, the Permittee shall keep records of all the required parameters listed in Condition D.4.20.

(i) All records shall be maintained in accordance with Section C - General Record Keeping Requirements, of this permit.

D.4.23 Recordkeeping Requirements [40 CFR 60.696] [326 IAC 12]

Pursuant to 40 CFR 60.696, the Permittee shall comply with the following requirements:

(a) Each Permittee of a facility subject to the provisions of this subpart shall comply with the recordkeeping requirements of this section. All records shall be retained for a period of 2 years after being recorded unless otherwise noted.

(b) (1) For individual drain systems subject to Sec. 60.692-2, the location, date, and corrective action shall be recorded for each drain when the water seal is dry or otherwise breached, when a drain cap or plug is missing or improperly installed, or other problem is identified that could result in VOC emissions, as determined during the initial and periodic visual or physical inspection.

(2) For junction boxes subject to Sec. 60.692-2, the location, date, and corrective action shall be recorded for inspections required by Sec. 60.692-2(b) when a broken seal, gap, or other problem is identified that could result in VOC emissions.

(3) For sewer lines subject to Sec. Sec. 60.692-2 and 60.693-1(e), the location, date, and corrective action shall be recorded for inspections required by Sec. Sec. 60.692-2(c) and 60.693-1(e) when a problem is identified that could result in VOC emissions.

(c) For oil-water separators subject to Sec. 60.692-3, the location, date, and corrective action shall be recorded for inspections required by Sec. 60.692-3(a) when a problem is identified that could result in VOC emissions.

(d) For closed vent systems subject to Sec. 60.692-5 and completely closed drain systems subject to Sec. 60.693-1, the location, date, and corrective action shall be recorded for inspections required by Sec. 60.692-5(e) during which detectable emissions are measured or a problem is identified that could result in VOC emissions.

(e) (1) If an emission point cannot be repaired or corrected without a process unit shutdown, the expected date of a successful repair shall be recorded.
(2) The reason for the delay as specified in Sec. 60.692-6 shall be recorded if an emission point or equipment problem is not repaired or corrected in the specified amount of time.
(3) The signature of the owner or operator (or designee) whose decision it was that repair could not be effected without refinery or process shutdown shall be recorded.
(4) The date of successful repair or corrective action shall be recorded.

(f) (1) A copy of the design specifications for all equipment used to comply with the provisions of this subpart shall be kept for the life of the source in a readily accessible location.
(2) The following information pertaining to the design specifications shall be kept.

(i) Detailed schematics, and piping and instrumentation diagrams.
(ii) The dates and descriptions of any changes in the design specifications.

(3) The following information pertaining to the operation and maintenance of closed drain systems and closed vent systems shall be kept in a readily accessible location.

(i) Documentation demonstrating that the control device will achieve the required control efficiency during maximum loading conditions shall be kept for the life of the facility. This documentation is to include a general description of the gas streams that enter the control device, including flow and volatile organic compound content under varying liquid level conditions (dynamic and static) and manufacturer's design specifications for the control device. If an enclosed combustion device with a minimum residence time of 0.75 seconds and a minimum temperature of 816 co (1,500^{o}F) is used to meet the 95-percent requirement, documentation that those conditions exist is sufficient to meet the requirements of this paragraph.
(ii) For a carbon adsorption system that does not regenerate the carbon bed directly onsite in the control device such as a carbon canister, the design analysis shall consider the vent stream composition, constituent concentrations, flow rate, relative humidity, and temperature. The design analysis shall also establish the design exhaust vent stream organic compound concentration level, capacity of carbon bed, type and working capacity of activated carbon used for carbon bed, and design carbon replacement interval based on the total carbon working capacity of the control device and source operating schedule.
(iii) Periods when the closed vent systems and control devices required in Sec. 60.692 are not operated as designed, including periods when a flare pilot does not have a flame shall be recorded and kept for 2 years after the information is recorded.
(iv) Dates of startup and shutdown of the closed vent system and control devices required in Sec. 60.692 shall be recorded and kept for 2 years after the information is recorded.
(v) The dates of each measurement of detectable emissions required in Sec. Sec. 60.692, 60.693, or 60.692-5 shall be recorded and kept for 2 years after the information is recorded.
(vi) The background level measured during each detectable emissions measurement shall be recorded and kept for 2 years after the information is recorded.
(vii) The maximum instrument reading measured during each detectable emission measurement shall be recorded and kept for 2 years after the information is recorded.
(viii) Each Permittee of an affected facility that uses a thermal incinerator shall maintain continuous records of the temperature of the gas stream in the combustion zone of the incinerator and records of all 3-hour periods of operation during which the average temperature of the gas stream in the combustion zone is more than 28°C (50°F) below the design combustion zone temperature, and shall keep such records for 2 years after the information is recorded.
(ix) Each Permittee of an affected facility that uses a catalytic incinerator shall maintain continuous records of the temperature of the gas stream both upstream and downstream of the catalyst bed of the incinerator, records of all 3-hour periods of operation during which the average temperature measured before the catalyst bed is more than 28oC (50°F) below the design gas stream temperature, and records of all 3-hour periods during which the average temperature difference across the catalyst bed is less than 80 percent of the design temperature difference, and shall keep such records for 2 years after the information is recorded.
(x) Each Permittee of an affected facility that uses a carbon adsorber shall maintain continuous records of the VOC concentration level or reading of

organics of the control device outlet gas stream or inlet and outlet gas stream and records of all 3-hour periods of operation during which the average VOC concentration level or reading of organics in the exhaust gases, or inlet and outlet gas stream, is more than 20 percent greater than the design exhaust gas concentration level, and shall keep such records for 2 years after the information is recorded.

(A) Each Permittee of an affected facility that uses a carbon adsorber which is regenerated directly onsite shall maintain continuous records of the volatile organic compound concentration level or reading of organics of the control device outlet gas stream or inlet and outlet gas stream and records of all 3-hour periods of operation during which the average volatile organic compound concentration level or reading of organics in the exhaust gases, or inlet and outlet gas stream, is more than 20 percent greater than the design exhaust gas concentration level, and shall keep such records for 2 years after the information is recorded.

(B) If a carbon adsorber that is not regenerated directly onsite in the control device is used, then the owner or operator shall maintain records of dates and times when the control device is monitored, when breakthrough is measured, and shall record the date and time that the existing carbon in the control device is replaced with fresh carbon.

(g) If the Permittee elects to install a tightly sealed cap or plug over a drain that is out of active service, the owner or operator shall keep for the life of a facility in a readily accessible location, plans or specifications which indicate the location of such drains.

(h) For stormwater sewer systems subject to the exclusion in Sec. 60.692-1(d)(1), an owner or operator shall keep for the life of the facility in a readily accessible location, plans or specifications which demonstrate that no wastewater from any process units or equipment is directly discharged to the stormwater sewer system.

(i) For ancillary equipment subject to the exclusion in Sec. 60.692-1(d)(2), an owner or operator shall keep for the life of a facility in a readily accessible location, plans or specifications which demonstrate that the ancillary equipment does not come in contact with or store oily wastewater.

(j) For non-contact cooling water systems subject to the exclusion in Sec. 60.692-1(d)(3), an owner or operator shall keep for the life of the facility in a readily accessible location, plans or specifications which demonstrate that the cooling water does not contact hydrocarbons or oily wastewater and is not recirculated through a cooling tower.

(k) For oil-water separators subject to Sec. 60.693-2, the location, date, and corrective action shall be recorded for inspections required by Sec. Sec. 60.693-2(a)(1)(iii)(A) and (B), and shall be maintained for the time period specified in paragraphs (k)(1) and (2) of this section.

(1) For inspections required by Sec. 60.693-2(a)(1)(iii)(A), ten years after the information is recorded.

(2) For inspections required by Sec. 60.693-2(a)(1)(iii)(B), two years after the information is recorded.

D.4.24 Reporting Requirements [40 CFR 60.698] [326 IAC 12]

Pursuant to 40 CFR 60.698, the Permittee shall comply with the following requirements:

(a) The Permittee electing to comply with the provisions of Sec. 60.693 shall notify the Administrator of the alternative standard selected in the report required in Sec. 60.7.

(b) (1) Each Permittee of a facility subject to this subpart shall submit to the Administrator within 60 days after initial startup a certification that the equipment necessary to comply with these standards has been installed and that the

required initial inspections or tests of process drains, sewer lines, junction boxes, oil-water separators, and closed vent systems and control devices have been carried out in accordance with these standards. Thereafter, the owner or operator shall submit to the Administrator semiannually a certification that all of the required inspections have been carried out in accordance with these standards.

(2) Each Permittee of an affected facility that uses a flare shall submit to the Administrator within 60 days after initial startup, as required under Sec. 60.8(a), a report of the results of the performance test required in Sec. 60.696(c).

(c) A report that summarizes all inspections when a water seal was dry or otherwise breached, when a drain cap or plug was missing or improperly installed, or when cracks, gaps, or other problems were identified that could result in VOC emissions, including information about the repairs or corrective action taken, shall be submitted initially and semiannually thereafter to OAQ, IDEM.

(d) As applicable, a report shall be submitted semiannually to the Administrator that indicates:

(1) Each 3-hour period of operation during which the average temperature of the gas stream in the combustion zone of a thermal incinerator, as measured by the temperature monitoring device, is more than 28 [deg]C (50 [deg]F) below the design combustion zone temperature,

(2) Each 3-hour period of operation during which the average temperature of the gas stream immediately before the catalyst bed of a catalytic incinerator, as measured by the temperature monitoring device, is more than 28 [deg]C (50 [deg]F) below the design gas stream temperature, and any 3-hour period during which the average temperature difference across the catalyst bed (i.e., the difference between the temperatures of the gas stream immediately before and after the catalyst bed), as measured by the temperature monitoring device, is less than 80 percent of the design temperature difference, or,

(3) Each 3-hour period of operation during which the average VOC concentration level or reading of organics in the exhaust gases from a carbon adsorber is more than 20 percent greater than the design exhaust gas concentration level or reading.

(i) Each 3-hour period of operation during which the average volatile organic compound concentration level or reading of organics in the exhaust gases from a carbon adsorber which is regenerated directly onsite is more than 20 percent greater than the design exhaust gas concentration level or reading.

(ii) Each occurrence when the carbon in a carbon adsorber system that is not regenerated directly onsite in the control device is not replaced at the predetermined interval specified in Sec. 60.695(a)(3)(ii).

(e) If compliance with the provisions of this subpart is delayed pursuant to Sec. 60.692-7, the notification required under 40 CFR 60.7(a)(4) shall include the estimated date of the next scheduled refinery or process unit shutdown after the date of notification and the reason why compliance with the standards is technically impossible without a refinery or process unit shutdown.

SECTION D.5 **FACILITY OPERATION CONDITIONS**

Facility Description [326 IAC 2-7-5(15)]:

(e) One (1) Main Refinery Flare, identified as RCD-1 with a maximum heat input rate of 371 MMBtu/hr of refinery fuel gas/process gas (with capacity for a supplementary pilot fuel heat input rate of 3.0 MMBtu/hr), installed in 1945 and replaced in 2006 and to stack 118;

Under 40 CFR Part 60, Subpart Ja (currently under stay) the Main Refinery Flare is considered an affected facility.

(f) One (1) Crude heater equipped with a Low-NOx burner, identified as C-II with a maximum heat input rate of 131 mmBtu/hr, combusting refinery fuel gas and No. 6 residual fuel oil, installed in 1955 and exhausting to stack 1.

(g) One (1) Unifiner heater, identified as H-H5 with a maximum heat input rate of 20 mmBtu/hr, combusting refinery fuel gas, installed in 1959 and exhausting to stack 2.

(h) One (1) Cycle oil heater, identified as H-H2 with a maximum heat input rate of 10 mmBtu/hr, combusting refinery fuel gas, installed in 1956 and exhausting to stack 3.

(i) One (1) Naphtha splitter heater, identified as H-H3 with a maximum heat input rate of 12.2 mmBtu/hr, combusting refinery fuel gas, installed in 1956 and exhausting to stack 4.

(j) One (1) Vacuum heater, identified as V-IV with a maximum heat input rate of 14.1 mmBtu/hr, combusting refinery fuel gas and No. 6 residual fuel oil, installed in 1950, approved to be modified in 2007, and exhausting to stack 5.

(k) One (1) Old Platformer heater, identified as P-H1 with a maximum heat input rate of 29 mmBtu/hr, combusting refinery fuel gas, installed in 1956 and exhausting to stack 6.

(l) One (1) Alkylation unit heater, identified as A-H1 with a maximum heat input rate of 13.2 mmBtu/hr, combusting refinery fuel gas and No. 6 residual fuel oil, installed in 1966 and exhausting to stack 7.

(m) One (1) Auxiliary crude heater, identified as C-I with a maximum heat input rate of 10.1 mmBtu/hr, combusting refinery fuel gas, installed in 1966 and exhausting to stack 11;

(n) One (1) Platformer stabilizer reb, identified as P-H2 with a maximum heat input rate of 5.92 mmBtu/hr, combusting refinery fuel gas, installed in 1956 and exhausting to stack 12.

(o) One (1) no. 1 boiler, with a maximum heat input rate of 52 mmBtu/hr of process gas and/or No. 6 residual oil, identified as B1 and exhausting to stack 8;

(p) One (1) no. 2 boiler, with a maximum heat input rate of 65 mmBtu/hr of residual oil and/or process gas, identified as B2 and exhausting to stack 13;

(q) One (1) no. 3 boiler, with a maximum heat input rate of 52 mmBtu/hr of residual oil and/or process gas, identified as B3 and exhausting to stack 14;

(r) One (1) Vacuum heater husky, identified as VIII with a maximum heat input rate of 6.27 mmBtu/hr, combusting refinery fuel gas No. 6 residual fuel oil,, installed in 1963 and exhausting to stack 64.

(b) One (1) Fluid Catalytic Cracking Unit (FCCU) Raw Oil Pre-heater, identified as H-101 with a maximum heat input rate of 18.1 million British Thermal Units per hour (mmBtu/hr), combusting refinery fuel gas only (no sour water stripper overhead off-gas combustion), installed in 1945 and exhausting to stack 9.

(qq) One (1) Low Sulfur Gasoline (LSG) Unit consisting of the following equipment:

(1) LSG Reactor Charge Heater (810-H101) approved for construction in 2008, with a maximum capacity of 5.985 MMBtu, combusting refinery fuel gas only, and venting to stack 128.

Under 40 CFR Part 60, Subpart Ja (currently under stay) the LSG Reactor Charge Heater is considered an affected facility.

(2) #5 Cooling Tower with a maximum capacity of 3,600 gpm approved for construction in 2008.

(3) LSG Unit components and drains (800 valves, 16 drains, and 5 pumps) approved for construction in 2008.

Under 40 CFR 63, Subpart CC, equipment leaks associated with a petroleum refinery are considered as an affected facility.

Under 40 CFR 60, Subpart QQQ, new and existing drains are considered affected facilities at a petroleum refinery.

Under 40 CFR 60, Subpart GGGa, valves are considered affected facilities at a petroleum refinery.

Under 40 CFR 61, Subpart FF new and existing drains are considered affected facilities for benzene waste operations.

(The information describing the process contained in this emissions unit description box is descriptive information and does not constitute enforceable conditions.)

Emission Limitations and Standards [326 IAC 2-7-5(1)]

D.5.1 Particulate Matter (PM)

Pursuant to 326 IAC 6-2-3 (Particulate Matter Emission Limitations for Sources of Indirect Heating, the PM emissions from boilers B1, B2 and B3 shall be limited to 0.40, 0.25 and 0.40 pounds per MMBtu heat input, respectively.

This limitation is based on the following equation:

$$P_T = \frac{C \times a \times h}{76.5 \times Q^{0.75} \times N^{0.25}}$$

Where: C = maximum ground level concentration (50 µg/m3, for a period not to exceed 60 min.)
Pt = maximum allowable particulate matter (PM) emitted per MMBtu heat input
Q = total source max. indirect heater input

N = Number of stacks in fuel burning operation.

a = plume rise factor (0.67, for Q < 1,000)

h = Stack height in feet. If a number of stacks of different heights exist, the average stack height to represent “N” stacks shall be calculated by weighing each stack height with its particulate matter emission rate as follows:

$$h = \frac{\sum_{i=1}^{N} H_i \times pa_i \times Q}{\sum_{i=1}^{N} pa_i \times Q}$$

Where: pa = the actual controlled emission rate in lb/mmBtu using the emission factor from AP-42 or stack test data.

D.5.2 Particulate Matter (PM) [326 IAC 6-2-4]

Pursuant to 326 IAC 6-2-4 (Particulate Matter Emissions Limitations), particulate emissions from the 5.985 MMBtu/hr LSG Charge Reactor Heater shall not exceed 0.1 pounds per MMBtu heat input.

D.5.3 Sulfur Dioxide (SO2) [326 IAC 7-1.1-1] [326 IAC 7-2-1]

Pursuant to 326 IAC 7-1.1 (SO_2 Emissions Limitations) the SO_2 emissions from the emission units C-II, boilers Nos. 1, 2 and 3, V-IV, A-HI, H101, and V-III, when burning No. 6 residual fuel oil, shall not exceed 1.6 pounds per MMBtu heat input. Pursuant to 326 IAC 7-2-1, compliance shall be demonstrated on a thirty (30) day rolling weighted average.

D.5.4 No. 6 Fuel Usage [326 IAC 2-2]

The input of No. 6 fuel oil to the four(4) boilers B1, B2, B3, and B4, based on a maximum fuel oil sulfur content of 0.8 percent shall be limited, to 3,214.92 thousand gallons per twelve (12) consecutive month period with compliance determined at the end of each month. This usage limit is required to limit the PM10 emissions from the boilers to less than 14.49 tons per twelve (12) consecutive month period. Therefore, pursuant to 326 IAC 2-2, the PSD requirements do not apply.

D.5.5 General Provisions Relating to NESHAP [326 IAC 20-1] [40 CFR Part 63, Subpart A]

The provisions of 40 CFR 63 Subpart A - General Provisions, which are incorporated as 326 IAC 20-1-1, apply to the affected sources, as designated by 40 CFR 63.7506(b). The Permittee must comply with these requirements on and after the effective date of 40 CFR 63, Subpart DDDDD.

D.5.6 National Emission Standards for Hazardous Air Pollutants for Industrial, Commercial, and Institutional Boilers and Process Heaters [40 CFR Part 63, Subpart DDDDD]

(a) The affected sources are subject to the National Emission Standards for Hazardous Air Pollutants (NESHAP) for Industrial, Commercial, and Institutional Boilers and Process Heaters, (40 CFR 63, Subpart DDDDD), as of the effective date of 40 CFR 63, Subpart DDDDD. Pursuant to this rule, the Permittee must comply with 40 CFR 63, Subpart DDDDD on and after three years after September 13, 2004, the effective date of 40 CFR 63, Subpart DDDDD.

(b) The following emissions units comprise the affected source for the large liquid fuel subcategory:

(1) One (1) no. 1 boiler, with a maximum heat input rate of 52 mmBtu/hr of process gas and/or No. 6 residual oil, identified as B1 and exhausting to stack 8.
(2) One (1) no. 2 boiler, with a maximum heat input rate of 65 mmBtu/hr of residual oil and/or process gas, identified as B2 and exhausting to stack 13.
(3) One (1) no. 3 boiler, with a maximum heat input rate of 52 mmBtu/hr of residual oil and/or process gas, identified as B3 and exhausting to stack 14.

(c) The definitions of 40 CFR 63, Subpart DDDDD at 40 CFR 63.7575 are applicable to the affected source(s).

Compliance Determination Requirements

D.5.7 Sulfur Dioxide Emissions and Sulfur Content

Compliance with Condition D.5.3 shall be determined utilizing one of the following options:

(a) Pursuant to 326 IAC 3-7-4, the Permittee shall demonstrate that the sulfur dioxide emissions do not exceed 1.6 pound per million Btu heat input by:

(1) Providing vendor analysis of fuel delivered, if accompanied by a vendor certification, or;

(2) Analyzing the oil sample to determine the sulfur content of the oil via the procedures in 40 CFR 60, Appendix A, Method 19.
(A) Oil samples may be collected from the fuel tank immediately after the fuel tank is filled and before any oil is combusted; and
(B) If a partially empty fuel tank is refilled, a new sample and analysis would be required upon filling.

(b) Compliance may also be determined by conducting a stack test for sulfur dioxide emissions from the boiler using 40 CFR 60, Appendix A, Method 6 in accordance with the procedures in 326 IAC 3-6.

A determination of noncompliance pursuant to any of the methods specified in (a) or (b) above shall not be refuted by evidence of compliance pursuant to the other method.

Compliance Monitoring Requirements [326 IAC 2-5.1-3(e)(2)] [326 IAC 2-6.1-5(a)(2)]

D.5.8 Visible Emissions Notations

(a) Visible emission notations of the boiler stacks (B1, B2 and B3) exhaust shall be performed once per day during normal daylight operations while combusting fuel oil. A trained employee shall record whether emissions are normal or abnormal.

(b) For processes operated continuously, "normal" means those conditions prevailing, or expected to prevail, eighty percent (80%) of the time the process is in operation, not counting startup or shut down time.

(c) In the case of batch or discontinuous operations, readings shall be taken during that part of the operation that would normally be expected to cause the greatest emissions.

(d) A trained employee is an employee who has worked at the plant at least one (1) month and has been trained in the appearance and characteristics of normal visible emissions for that specific process.

(e) If abnormal emissions are observed, the Permittee shall take reasonable response steps in accordance with Section C - Response to Excursions or Exceedances. Failure to take response steps in accordance with Section C - Response to Excursions or Exceedances, shall be considered a deviation from this permit.

Record Keeping and Reporting Requirement [326 IAC 2-7-5(3)] [326 IAC 2-7-19]

D.5.9 Record Keeping Requirements

(a) To document compliance with Conditions D.5.3, the Permittee shall maintain records in accordance with (1) through (6) below.

(1) Calendar dates covered in the compliance determination period;
(2) Actual No. 6 residual fuel oil usage per month since last compliance determination period and equivalent SO_2 emissions;
(3) A certification, signed by the Permittee, that the records of the fuel supplier certifications represent all of the fuel combusted during the period; and

If the fuel supplier certification is used to demonstrate compliance the following, as a minimum, shall be maintained:

(4) Fuel supplier certifications.
(5) The name of the fuel supplier; and
(6) A statement from the fuel supplier that certifies the sulfur content of the fuel oil.

The Permittee shall retain records of all recording/monitoring data and support information for a period of five (5) years, or longer if specified elsewhere in this permit, from the date of the monitoring sample, measurement, or report. Support information includes all calibration and maintenance records and all original strip-chart recordings for continuous monitoring instrumentation, and copies of all reports required by this permit.

(b) To document compliance with Condition D.5.5, the Permittee shall maintain records of visible emission notations of the three boiler stacks (B1, B2 and B3) once per shift.

(c) All records shall be maintained in accordance with Section C - General Record Keeping Requirements, of this permit.

D.5.10 National Emission Standards for Hazardous Air Pollutants for Industrial, Commercial, and Institutional Boilers and Process Heaters - Notification Requirements [40 CFR 63, Subpart DDDDD]

(a) Pursuant to 40 CFR 63.7545(a) and 40 CFR 63.7506(b), the Permittee shall submit an Initial Notification containing the information specified in 40 CFR 63.9(b)(2) not later than 120 days after the effective date of 40 CFR 63, Subpart DDDDD as required by 40 CFR 63.7545(b).

(b) The notification required by paragraph (a) shall be submitted to:

Indiana Department of Environmental Management
Compliance Data Section, Office of Air Quality
100 North Senate Avenue
MC 61-53 IGCN 1003
Indianapolis, Indiana 46204-2251

and

United States Environmental Protection Agency, Region V
Director, Air and Radiation Division
77 West Jackson Boulevard
Chicago, Illinois 60604-3590

The notification requires the certification by the "responsible official" as defined by 326 IAC 2-7-1(34).

SECTION D.6 **FACILITY OPERATION CONDITIONS**

Facility Description [326 IAC 2-7-5(15)]:

The following insignificant activities which are specifically regulated, as defined in 326 IAC 2-7-1(21):

(a) Metal and related material cutting, fabricating and preparation. [326 IAC 6-3]

(b) Sand blasting or mechanical stripping on tanks and other equipment. [326 IAC 6-3]

(c) Painting on tanks and other equipment. [326 IAC 6-3]

(d) Welding/Cutting of metal for vessel, pipeline and equipment maintenance. [326 IAC 6-3]

(The information describing the process contained in this facility description box is descriptive information and does not constitute enforceable conditions.)

Emission Limitations and Standards [326 IAC 2-7-5(1)]

Process Weight Activities

D.6.1 Particulate Matter Emission Limitations For Processes with Process Weight Rates Less Than One Hundred (100) pounds per hour [326 IAC 6-3-2(c)]

Pursuant to 326 IAC 6-3-2(c), the allowable particulate matter emissions rate from any process not already regulated by 326 IAC 6-1 or any New Source Performance Standard, and which has a maximum process weight rate less than 100 pounds per hour shall not exceed 0.551 pounds per hour. This includes the following operations:

(a) Metal and related material cutting, fabricating and preparation.
(b) Sand blasting or mechanical stripping on tanks and other equipment.
(c) Painting on tanks and other equipment.
(d) Welding/Cutting of metal for vessel, pipeline and equipment maintenance.

SECTION E.1 **FACILITY OPERATION CONDITIONS**

Facility Description [326 IAC 2-8-4(10)]:

(oo) One (1) no. 4 boiler, constructed in 2006, with a maximum heat input rate of 84.9 MMBtu/hr of process gas and/or No. 6 residual oil and/or natural gas, identified as B4 and exhausting to stack 131.

Under the Standards of Performance for Small Industrial-Commercial-Institutional Steam Generating Units NSPS (40 CFR 60, Subpart Dc), the boiler B4, is considered a new source.

(The information describing the process contained in this facility description box is descriptive information and does not constitute enforceable conditions.)

Emission Limitations and Standards [326 IAC 2-7-5(1)]

E.1.1 Sulfur Dioxide (SO2) [326 IAC 7-1.1-1] [326 IAC 7-2-1]

Pursuant to 326 IAC 7-1.1 (SO_2 Emissions Limitations) the SO_2 emissions from the boiler B4, when burning No. 6 residual fuel oil, shall not exceed 1.6 pounds per MMBtu heat input. Pursuant to 326 IAC 7-2-1, compliance shall be demonstrated on a thirty (30) day rolling weighted average.

E.1.2 PSD Minor Limit [326 IAC 2-2]

The input of No. 6 fuel oil to Boiler B4 shall be limited to less than 730,000 gallons (with maximum fuel oil sulfur content of 0.5% based on the Subpart Dc) per twelve (12) consecutive month period, with compliance determined at the end of each month. This fuel oil usage limit for boiler B4 is part of the total fuel oil usage limit of 3,214.92 thousand gallons per year for all four (4) boilers (B1, B2, B3 and B4) as specified in Condition D.5.3.

E.1.3 General Provisions Relating to NSPS [326 IAC 12-1] [40 CFR 60, Subpart A]

The provisions of 40 CFR Part 60, Subpart A - General Provisions, which are incorporated by reference in 326 IAC 12-1, apply to the facility described in this section except when otherwise specified in 40 CFR Part 60, Subpart Dc.

E.1.4 Standards of Performance for Small Industrial-Commercial-Institutional Steam Generating Units [40 CFR Part 60, Subpart Dc]

Pursuant to 40 CFR Part 60, Subpart Dc, the Permittee shall comply with the provisions of the National Source Performance Standards for Small Industrial-Commercial- Institutional Steam Generating Units, as specified as follows.

§ 60.40c Applicability and delegation of authority.

(a) Except as provided in paragraph (d) of this section, the affected facility to which this subpart applies is each steam generating unit for which construction, modification, or reconstruction is commenced after June 9, 1989 and that has a maximum design heat input capacity of 29 megawatts (MW) (100 million Btu per hour (Btu/hr)) or less, but greater than or equal to 2.9 MW (10 million Btu/hr).

(b) In delegating implementation and enforcement authority to a State under section 111(c) of the Clean Air Act, § 60.48c(a)(4) shall be retained by the Administrator and not transferred to a State.

(c) Steam generating units which meet the applicability requirements in paragraph (a) of this section are not subject to the sulfur dioxide (SO_2) or particulate matter (PM) emission limits, performance testing requirements, or monitoring requirements under this subpart (§§ 60.42c, 60.43c, 60.44c, 60.45c, 60.46c, or 60.47c) during periods of combustion research, as defined in § 60.41c.

(d) Any temporary change to an existing steam generating unit for the purpose of conducting combustion research is not considered a modification under § 60.14.

(e) Heat recovery steam generators that are associated with combined cycle gas turbines and meet the applicability requirements of subpart KKKK of this part are not subject to this subpart. This subpart will continue to apply to all other heat recovery steam generators that are capable of combusting more than or equal to 2.9 MW (10 MMBtu/h) heat input of fossil fuel but less than or equal to 29 MW (100 MMBtu/h) heat input of fossil fuel. If the heat recovery steam generator is subject to this subpart, only emissions resulting from combustion of fuels in the steam generating unit are subject to this subpart. (The gas turbine emissions are subject to subpart GG or KKKK, as applicable, of this part).

(f) Any facility covered by subpart AAAA of this part is not covered by this subpart.

(g) Any facility covered by an EPA approved State or Federal section 111(d)/129 plan implementing subpart BBBB of this part is not covered by this subpart.

§ 60.41c Definitions.

As used in this subpart, all terms not defined herein shall have the meaning given them in the Clean Air Act and in subpart A of this part.

Annual capacity factor means the ratio between the actual heat input to a steam generating unit from an individual fuel or combination of fuels during a period of 12 consecutive calendar months and the potential heat input to the steam generating unit from all fuels had the steam generating unit been operated for 8,760 hours during that 12-month period at the maximum design heat input capacity. In the case of steam generating units that are rented or leased, the actual heat input shall be determined based on the combined heat input from all operations of the affected facility during a period of 12 consecutive calendar months.

Coal means all solid fuels classified as anthracite, bituminous, subbituminous, or lignite by the American Society of Testing and Materials in ASTM D388-77, 90, 91, 95, or 98a, Standard Specification for Classification of Coals by Rank (IBR--see Sec. 60.17), coal refuse, and petroleum coke. Coal-derived synthetic fuels derived from coal for the purposes of creating useful heat, including but not limited to solvent refined coal, gasified coal, coal-oil mixtures, and coal-water mixtures, are also included in this definition for the purposes of this subpart.

Coal refuse means any by-product of coal mining or coal cleaning operations with an ash content greater than 50 percent (by weight) and a heating value less than 13,900 kilojoules per kilogram (kJ/kg) (6,000 Btu per pound (Btu/lb) on a dry basis.

Cogeneration steam generating unit means a steam generating unit that simultaneously produces both electrical (or mechanical) and thermal energy from the same primary energy source.

Combined cycle system means a system in which a separate source (such as a stationary gas turbine, internal combustion engine, or kiln) provides exhaust gas to a steam generating unit.

Combustion research means the experimental firing of any fuel or combination of fuels in a steam generating unit for the purpose of conducting research and development of more efficient combustion or more effective prevention or control of air pollutant emissions from combustion, provided that, during these periods of research and development, the heat generated is not used for any purpose other than preheating combustion air for use by that steam generating unit (i.e., the heat generated is released to the atmosphere without being used for space heating, process heating, driving pumps, preheating combustion air for other units, generating electricity, or any other purpose).

Conventional technology means wet flue gas desulfurization technology, dry flue gas desulfurization technology, atmospheric fluidized bed combustion technology, and oil hydrodesulfurization technology.

Distillate oil means fuel oil that complies with the specifications for fuel oil numbers 1 or 2, as defined by the American Society for Testing and Materials in ASTM D396-78, 89, 90, 92, 96, or 98, "Standard Specification for Fuel Oils" (incorporated by reference -- see § 60.17).

Dry flue gas desulfurization technology means a sulfur dioxide (SO2) control system that is located between the steam generating unit and the exhaust vent or stack, and that removes sulfur oxides from the

combustion gases of the steam generating unit by contacting the combustion gases with an alkaline slurry or solution and forming a dry powder material. This definition includes devices where the dry powder material is subsequently converted to another form. Alkaline reagents used in dry flue gas desulfurization systems include, but are not limited to, lime and sodium compounds.

Duct burner means a device that combusts fuel and that is placed in the exhaust duct from another source (such as a stationary gas turbine, internal combustion engine, kiln, etc.) to allow the firing of additional fuel to heat the exhaust gases before the exhaust gases enter a steam generating unit.

Emerging technology means any SO2 control system that is not defined as a conventional technology under this section, and for which the owner or operator of the affected facility has received approval from the Administrator to operate as an emerging technology under § 60.48c(a)(4).

Federally enforceable means all limitations and conditions that are enforceable by the Administrator, including the requirements of 40 CFR Parts 60 and 61, requirements within any applicable State implementation plan, and any permit requirements established under 40 CFR 52.21 or under 40 CFR 51.18 and 40 CFR 51.24.

Fluidized bed combustion technology means a device wherein fuel is distributed onto a bed (or series of beds) of limestone aggregate (or other sorbent materials) for combustion; and these materials are forced upward in the device by the flow of combustion air and the gaseous products of combustion. Fluidized bed combustion technology includes, but is not limited to, bubbling bed units and circulating bed units.

Fuel pretreatment means a process that removes a portion of the sulfur in a fuel before combustion of the fuel in a steam generating unit.

Heat input means heat derived from combustion of fuel in a steam generating unit and does not include the heat derived from preheated combustion air, recirculated flue gases, or exhaust gases from other sources (such as stationary gas turbines, internal combustion engines, and kilns).

Heat transfer medium means any material that is used to transfer heat from one point to another point.

Maximum design heat input capacity means the ability of a steam generating unit to combust a stated maximum amount of fuel (or combination of fuels) on a steady state basis as determined by the physical design and characteristics of the steam generating unit.

Natural gas means (1) a naturally occurring mixture of hydrocarbon and nonhydrocarbon gases found in geologic formations beneath the earth's surface, of which the principal constituent is methane, or (2) liquefied petroleum (LP) gas, as defined by the American Society for Testing and Materials in ASTM D1835-86, 87, 91, or 97, "Standard Specification for Liquefied Petroleum Gases" (incorporated by reference -- see § 60.17).

Noncontinental area means the State of Hawaii, the Virgin Islands, Guam, American Samoa, the Commonwealth of Puerto Rico, or the Northern Mariana Islands.

Oil means crude oil or petroleum, or a liquid fuel derived from crude oil or petroleum, including distillate oil and residual oil.

Potential sulfur dioxide emission rate means the theoretical SO2 emissions (nanograms per joule [ng/J], or pounds per million Btu [lb/million Btu] heat input) that would result from combusting fuel in an uncleaned state and without using emission control systems.

Process heater means a device that is primarily used to heat a material to initiate or promote a chemical reaction in which the material participates as a reactant or catalyst.

Residual oil means crude oil, fuel oil that does not comply with the specifications under the definition of distillate oil, and all fuel oil numbers 4, 5, and 6, as defined by the American Society for Testing and Materials in ASTM D396-78, 89, 90, 92, 96, or 98, "Standard Specification for Fuel Oils" (incorporated by reference -- see § 60.17).

Steam generating unit means a device that combusts any fuel and produces steam or heats water or any other heat transfer medium. This term includes any duct burner that combusts fuel and is part of a combined cycle system. This term does not include process heaters as defined in this subpart.

Steam generating unit operating day means a 24-hour period between 12:00 midnight and the following midnight during which any fuel is combusted at any time in the steam generating unit. It is not necessary for fuel to be combusted continuously for the entire 24-hour period.

Wet flue gas desulfurization technology means an SO2 control system that is located between the steam generating unit and the exhaust vent or stack, and that removes sulfur oxides from the combustion gases of the steam generating unit by contacting the combustion gases with an alkaline slurry or solution and forming a liquid material. This definition includes devices where the liquid material is subsequently converted to another form. Alkaline reagents used in wet flue gas desulfurization systems include, but are not limited to, lime, limestone, and sodium compounds.

Wet scrubber system means any emission control device that mixes an aqueous stream or slurry with the exhaust gases from a steam generating unit to control emissions of particulate matter (PM) or SO2.

Wood means wood, wood residue, bark, or any derivative fuel or residue thereof, in any form, including but not limited to sawdust, sanderdust, wood chips, scraps, slabs, millings, shavings, and processed pellets made from wood or other forest residues.

§ 60.42c Standard for sulfur dioxide.

(d) On and after the date on which the initial performance test is completed or required to be completed under § 60.8 of this part, whichever date comes first, no owner or operator of an affected facility that combusts oil shall cause to be discharged into the atmosphere from that affected facility any gases that contain SO_2 in excess of 215 ng/J (0.50 lb/million Btu) heat input; or, as an alternative, no owner or operator of an affected facility that combusts oil shall combust oil in the affected facility that contains greater than 0.5 weight percent sulfur. The percent reduction requirements are not applicable to affected facilities under this paragraph.

(g) Except as provided in paragraph (h) of this section, compliance with the percent reduction requirements, fuel oil sulfur limits, and emission limits of this section shall be determined on a 30-day rolling average basis.

(h) For affected facilities listed under paragraphs (h)(1), (2), or (3) of this section, compliance with the emission limits or fuel oil sulfur limits under this section may be determined based on a certification from the fuel supplier, as described under § 60.48c(f)(1), (2), or (3), as applicable.

(1) Distillate oil-fired affected facilities with heat input capacities between 2.9 and 29 MW (10 and 100 million Btu/hr).

(2) Residual oil-fired affected facilities with heat input capacities between 2.9 and 8.7 MW (10 and 30 million Btu/hr).

(3) Coal-fired facilities with heat input capacities between 2.9 and 8.7 MW (10 and 30 million Btu/hr).

(i) The SO2 emission limits, fuel oil sulfur limits, and percent reduction requirements under this section apply at all times, including periods of startup, shutdown, and malfunction.

(j) Only the heat input supplied to the affected facility from the combustion of coal and oil is counted under this section. No credit is provided for the heat input to the affected facility from wood or other fuels or for heat derived from exhaust gases from other sources, such as stationary gas turbines, internal combustion engines, and kilns.

§ 60.43c Standard for particulate matter.

(c) On and after the date on which the initial performance test is completed or required to be completed under § 60.8 of this part, whichever date comes first, no owner or operator of an affected facility that combusts coal, wood, or oil and has a heat input capacity of 8.7 MW (30 million Btu/hr) or greater shall cause to be discharged into the atmosphere from that affected facility any gases that exhibit greater than 20 percent opacity (6-minute average), except for one 6-minute period per hour of not more than 27 percent opacity.

(d) The PM and opacity standards under this section apply at all times, except during periods of startup, shutdown, or malfunction.

(e)(1) On or after the date on which the initial performance test is completed or is required to be completed under Sec. 60.8, whichever date comes first, no owner or operator of an affected facility that commences construction, reconstruction, or modification after February 28, 2005, and that combusts coal, oil, gas, wood, a mixture of these fuels, or a mixture of these fuels with any other fuels and has a heat input capacity of 8.7 MW (30 MMBtu/h) or greater shall cause to be discharged into the atmosphere from that affected facility any gases that contain particulate matter emissions in excess of 13 ng/J (0.030 lb/MMBtu) heat input, except as provided in paragraphs (e)(2) and (e)(3) of this section. Affected facilities subject to this paragraph, are also subject to the requirements of paragraphs (c) and (d) of this section.
(2) As an alternative to meeting the requirements of paragraph (e)(1) of this section, the owner or operator of an affected facility for which modification commenced after February 28, 2005, may elect to meet the requirements of this paragraph. On and after the date on which the performance test required to be conducted under Sec. 60.8 is completed, the owner or operator subject to the provisions of this subpart shall not cause to be discharged into the atmosphere from any affected facility for which modification commenced after February 28, 2005, any gases that contain particulate matter in excess of:
(i) 22 ng/J (0.051 lb/MMBtu) heat input derived from the combustion of coal, oil, gas, wood, a mixture of these fuels, or a mixture of these fuels with any other fuels, and

(ii) 0.2 percent of the combustion concentration (99.8 percent reduction) when combusting coal, oil, gas, wood, a mixture of these fuels, or a mixture of these fuels with any other fuels.

§ 60.44c Compliance and performance test methods and procedures for sulfur dioxide.

(a) Except as provided in paragraphs (g) and (h) of this section and in § 60.8(b), performance tests required under § 60.8 shall be conducted following the procedures specified in paragraphs (b), (c), (d), (e), and (f) of this section, as applicable. Section 60.8(f) does not apply to this section. The 30-day notice required in § 60.8(d) applies only to the initial performance test unless otherwise specified by the Administrator.

(b) The initial performance test required under § 60.8 shall be conducted over 30 consecutive operating days of the steam generating unit. Compliance with the percent reduction requirements and SO_2 emission limits under § 60.42c shall be determined using a 30-day average. The first operating day included in the initial performance test shall be scheduled within 30 days after achieving the maximum production rate at which the affect facility will be operated, but not later than 180 days after the initial startup of the facility. The steam generating unit load during the 30-day period does not have to be the maximum design heat input capacity, but must be representative of future operating conditions.

(c) After the initial performance test required under paragraph (b) and § 60.8, compliance with the percent reduction requirements and SO_2 emission limits under § 60.42c is based on the average percent reduction and the average SO_2 emission rates for 30 consecutive steam generating unit operating days. A separate performance test is completed at the end of each steam generating unit operating day, and a new 30-day average percent reduction and SO_2 emission rate are calculated to show compliance with the standard.

(e) If coal, oil, or coal and oil are combusted with other fuels:

(1) An adjusted E_{ho} (E_{ho} º) is used in Equation 19-19 of Method 19 to compute the adjusted E_{ao} (E_{ao}º) The E_{ho}º is computed using the following formula:

$E_{ho}^{o} = [E_{ho}-E_w(1-X_k)]/X_k$

where:

E_{ho}^{o} is the adjusted E_{ho}, ng/J (lb/million Btu).
E_{ho} is the hourly sulfur dioxide emission rate, ng/J (lb/million Btu).
E_w is the SO_2 concentration in fuels other than coal and oil combusted in the affected facility, as determined by the fuel sampling and analysis procedures in Method 9, ng/J (lb/million Btu). The value E_w for each fuel lot is used for each hourly average during the time that the lot is being combusted. The owner or operator does not have to measure Ew if the owner or operator elects to assume $E_w = 0$.
X_k is the fraction of total heat input from fuel combustion derived from coal and oil, as determined by applicable procedures in Method 19.

(2) The owner or operator of an affected facility that qualifies under the provisions of § 60.42c(c) or (d) [where percent reduction is not required] does not have to measure the parameters E_w or X_k if the owner or operator of the affected facility elects to measure emission rates of the coal or oil using the fuel sampling and analysis procedures under Method 19.

(f) Affected facilities subject to the percent reduction requirements under § 60.42c(a) or (b) shall determine compliance with the SO_2 emission limits under § 60.42c pursuant to paragraphs (d) or (e) of this section, and shall determine compliance with the percent reduction requirements using the following procedures:
(2) If coal, oil, or coal and oil are combusted with other fuels, the same procedures required in paragraph (f)(1) of this section are used, except as provided for in the following:

(i) To compute the $\%P_s$, an adjusted $\%R_g$ ($\%R_g^{o}$) is computed from E_{ao}^{o} from paragraph (e)(1) of this section and an adjusted average SO_2 inlet rate (E_{ai}^{o}) using the following formula:

$$\%R_g^{o}=100\ [1.0- E_{ao}^{o}/E_{ai}^{o})]$$

where:
$\%Rg^{o}$ is the adjusted $\%R_g$, in percent
E_{ao}^{o} is the adjusted E_{ao}, ng/J (lb/million Btu)
E_{ai}^{o} is the adjusted average SO_2 inlet rate, ng/J (lb/million Btu)

(ii) To compute E_{ai}^{o}, an adjusted hourly SO_2 inlet rate (E_{hi}^{o}) is used. The E_{hi}^{o} is computed using the following formula:

$E_{hi}^{o} = [E_{hi}-E_w(1-X_k)]/X_k$

where:

E_{hi}^{o} is the adjusted hourly E_{hi}, ng/J (lb/million Btu).
E_{hi} is the hourly sulfur dioxide inlet rate, ng/J (lb/million Btu).
E_w is the sulfur dioxide concentration in fuels other than coal and oil combusted in the affected facility, as determined by the fuel sampling and analysis procedures in Method 19, ng/J (lb/million Btu). The value E_w for each fuel lot is used for each hourly average during the time that the lot is being combusted. The owner or operator does not have to measure E_w if the owner or operator elects to assume $E_w = 0$.
X_k is the fraction of total heat input from fuel combustion derived from coal and oil, as determined by applicable procedures in Method 19.

(g) For oil-fired affected facilities where the owner or operator seeks to demonstrate compliance with the fuel oil sulfur limits under § 60.42c based on shipment fuel sampling, the initial performance test shall consist of sampling and analyzing the oil in the initial tank of oil to be fired in the steam generating unit to demonstrate that the oil contains 0.5 weight percent sulfur or less. Thereafter, the owner or operator of the affected facility shall sample the oil in the fuel tank after each new shipment of oil is received, as described under § 60.46c(d)(2).

(h) For affected facilities subject to § 60.42c(h)(1), (2), or (3) where the owner or operator seeks to demonstrate compliance with the SO_2 standards based on fuel supplier certification, the performance test

shall consist of the certification, the certification from the fuel supplier, as described under § 60.48c(f)(1), (2), or (3), as applicable.

(j) The owner or operator of an affected facility shall use all valid SO_2 emissions data in calculating $\%P_s$ and E_{ho} under paragraphs (d), (e), or (f) of this section, as applicable, whether or not the minimum emissions data requirements under § 60.46c(f) are achieved. All valid emissions data, including valid data collected during periods of startup, shutdown, and malfunction, shall be used in calculating %Ps or E_{ho} pursuant to paragraphs (d), (e), or (f) of this section, as applicable.

§ 60.45c Compliance and performance test methods and procedures for particulate matter.

(a) The owner or operator of an affected facility subject to the PM and/or opacity standards under Sec. 60.43c shall conduct an initial performance test as required under Sec. 60.8, and shall conduct subsequent performance tests as requested by the Administrator, to determine compliance with the standards using the following procedures and reference methods, except as specified in paragraph (c) and (d) of this section.

(1) Method 1 shall be used to select the sampling site and the number of traverse sampling points.
(2) Method 3 shall be used for gas analysis when applying Method 5, Method 5B, or Method 17.
(3) Method 5, Method 5B, or Method 17 shall be used to measure the concentration of PM as follows:

(i) Method 5 may be used only at affected facilities without wet scrubber systems.

(ii) Method 17 may be used at affected facilities with or without wet scrubber systems provided the stack gas temperature does not exceed a temperature of 160 °C (320 °F). The procedures of Sections 8.1 and 11.1 of Method 5B may be used in Method 17 only if Method 17 is used in conjunction with a wet scrubber system. Method 17 shall not be used in conjunction with a wet scrubber system if the effluent is saturated or laden with water droplets.

(iii) Method 5B may be used in conjunction with a wet scrubber system.

(4) The sampling time for each run shall be at least 120 minutes and the minimum sampling volume shall be 1.7 dry standard cubic meters (dscm) [60 dry standard cubic feet (dscf)] except that smaller sampling times or volumes may be approved by the Administrator when necessitated by process variables or other factors.

(5) For Method 5 or Method 5B, the temperature of the sample gas in the probe and filter holder shall be monitored and maintained at 160±14 °C (320±25 °F).

(6) For determination of PM emissions, an oxygen or carbon dioxide measurement shall be obtained simultaneously with each run of Method 5, Method 5B, or Method 17 by traversing the duct at the same sampling location.

(7) For each run using Method 5, Method 5B, or Method 17, the emission rates expressed in ng/J (lb/million Btu) heat input shall be determined using:

(i) The oxygen or carbon dioxide measurements and PM measurements obtained under this section,

(ii) The dry basis F-factor, and

(iii) The dry basis emission rate calculation procedure contained in Method 19 (appendix A).

(8) Method 9 (6-minute average of 24 observations) shall be used for determining the opacity of stack emissions.

(b) The owner or operator of an affected facility seeking to demonstrate compliance with the PM standards under § 60.43c(b)(2) shall demonstrate the maximum design heat input capacity of the steam generating unit by operating the steam generating unit at this capacity for 24 hours. This demonstration shall be made during the initial performance test, and a subsequent demonstration may be requested at

any other time. If the demonstrated 24-hour average firing rate for the affected facility is less than the maximum design heat input capacity stated by the manufacturer of the affected facility, the demonstrated 24-hour average firing rate shall be used to determine the annual capacity factor for the affected facility; otherwise, the maximum design heat input capacity provided by the manufacturer shall be used.

(d) In place of particulate matter testing with EPA Reference Method 5, 5B, or 17, an owner or operator may elect to install, calibrate, maintain, and operate a continuous emission monitoring system for monitoring particulate matter emissions discharged to the atmosphere and record the output of the system. The owner or operator of an affected facility who elects to continuously monitor particulate matter emissions instead of conducting performance testing using EPA Method 5, 5B, or 17 shall install, calibrate, maintain, and operate a continuous emission monitoring system and shall comply with the requirements specified in paragraphs (d)(1) through (d)(13) of this section.

(1) Notify the Administrator 1 month before starting use of the system.

(2) Notify the Administrator 1 month before stopping use of the system.

(3) The monitor shall be installed, evaluated, and operated in accordance with Sec. 60.13 of subpart A of this part.

(4) The initial performance evaluation shall be completed no later than 180 days after the date of initial startup of the affected facility, as specified under Sec. 60.8 of subpart A of this part or within 180 days of notification to the Administrator of use of the continuous monitoring system if the owner or operator was previously determining compliance by Method 5, 5B, or 17 performance tests, whichever is later.

(5) The owner or operator of an affected facility shall conduct an initial performance test for particulate matter emissions as required under Sec. 60.8 of subpart A of this part. Compliance with the particulate matter emission limit shall be determined by using the continuous emission monitoring system specified in paragraph (d) of this section to measure particulate matter and calculating a 24-hour block arithmetic average emission concentration using EPA Reference Method 19, section 4.1.

(6) Compliance with the particulate matter emission limit shall be determined based on the 24-hour daily (block) average of the hourly arithmetic average emission concentrations using continuous emission monitoring system outlet data.

(7) At a minimum, valid continuous monitoring system hourly averages shall be obtained as specified in paragraph (d)(7)(i) of this section for 75 percent of the total operating hours per 30-day rolling average.

(i) At least two data points per hour shall be used to calculate each 1-hour arithmetic average.

(ii) [Reserved]

(8) The 1-hour arithmetic averages required under paragraph (d)(7) of this section shall be expressed in ng/J or lb/MMBtu heat input and shall be used to calculate the boiler operating day daily arithmetic average emission concentrations. The 1-hour arithmetic averages shall be calculated using the data points required under Sec. 60.13(e)(2) of subpart A of this part.

(9) All valid continuous emission monitoring system data shall be used in calculating average emission concentrations even if the minimum continuous emission monitoring system data requirements of paragraph (d)(7) of this section are not met.

(10) The continuous emission monitoring system shall be operated according to Performance Specification 11 in appendix B of this part.

(11) During the correlation testing runs of the continuous emission monitoring system required by Performance Specification 11 in appendix B of this part, particulate matter and oxygen (or carbon dioxide) data shall be collected concurrently (or within a 30- to 60-minute period) by both the continuous emission monitors and the test methods specified in paragraph (d)(7)(i) of this section.

(i) For particulate matter, EPA Reference Method 5, 5B, or 17 shall be used.

(ii) For oxygen (or carbon dioxide), EPA reference Method 3, 3A, or 3B, as applicable shall be used.

(12) Quarterly accuracy determinations and daily calibration drift tests shall be performed in accordance with procedure 2 in appendix F of this part. Relative Response Audit's must be performed annually and Response Correlation Audits must be performed every 3 years.

(13) When particulate matter emissions data are not obtained because of continuous emission monitoring system breakdowns, repairs, calibration checks, and zero and span adjustments, emissions data shall be obtained by using other monitoring systems as approved by the Administrator or EPA Reference Method 19 to provide, as necessary, valid emissions data for a minimum of 75 percent of total operating hours on a 30-day rolling average.

§ 60.46c Emission monitoring for sulfur dioxide

(b) The 1-hour average SO_2 emission rates measured by a CEMS shall be expressed in ng/J or lb/million Btu heat input and shall be used to calculate the average emission rates under § 60.42c. Each 1-hour average SO_2 emission rate must be based on at least 30 minutes of operation and include at least 2 data points representing two 15-minute periods. Hourly SO_2 emission rates are not calculated if the affected facility is operated less than 30 minutes in a 1-hour period and are not counted toward determination of a steam generating unit operating day.

(c) The procedures under § 60.13 shall be followed for installation, evaluation, and operation of the CEMS.

(1) All CEMS shall be operated in accordance with the applicable procedures under Performance Specifications 1, 2, and 3 (appendix B).

(2) Quarterly accuracy determinations and daily calibration drift tests shall be performed in accordance with Procedure 1 (appendix F).

(3) For affected facilities subject to the percent reduction requirements under § 60.42c, the span value of the SO_2 CEMS at the inlet to the SO_2 control device shall be 125 percent of the maximum estimated hourly potential SO_2 emission rate of the fuel combusted, and the span value of the SO_2 CEMS at the outlet from the SO_2 control device shall be 50 percent of the maximum estimated hourly potential SO_2 emission rate of the fuel combusted.

(4) For affected facilities that are not subject to the percent reduction requirements of § 60.42c, the span value of the SO_2 CEMS at the outlet from the SO_2 control device (or outlet of the steam generating unit if no SO_2 control device is used) shall be 125 percent of the maximum estimated hourly potential SO_2 emission rate of the fuel combusted.

(d) As an alternative to operating a CEMS at the inlet to the SO_2 control device (or outlet of the steam generating unit if no SO_2 control device is used) as required under paragraph (a) of this section, an owner or operator may elect to determine the average SO_2 emission rate by sampling the fuel prior to combustion. As an alternative to operating a CEMS at the outlet from the SO_2 control device (or outlet of the steam generating unit if no SO_2 control device is used) as required under paragraph (a) of this section, an owner or operator may elect to determine the average SO_2 emission rate by using Method 6B. Fuel sampling shall be conducted pursuant to either paragraph (d)(1) or (d)(2) of this section. Method 6B shall be conducted pursuant to paragraph (d)(3) of this section.

(1) For affected facilities combusting coal or oil, coal or oil samples shall be collected daily in an as-fired condition at the inlet to the steam generating unit and analyzed for sulfur content and heat content according the Method 19. Method 19 provides procedures for converting these measurements into the format to be used in calculating the average SO_2 input rate.

(2) As an alternative fuel sampling procedure for affected facilities combusting oil, oil samples may be collected from the fuel tank for each steam generating unit immediately after the fuel tank is filled and before any oil is combusted. The owner or operator of the affected facility shall analyze the oil sample to determine the sulfur content of the oil. If a partially empty fuel tank is refilled, a new sample and analysis of the fuel in the tank would be required upon filling. Results of the fuel analysis taken after each new

shipment of oil is received shall be used as the daily value when calculating the 30-day rolling average until the next shipment is received. If the fuel analysis shows that the sulfur content in the fuel tank is greater than 0.5 weight percent sulfur, the owner or operator shall ensure that the sulfur content of subsequent oil shipments is low enough to cause the 30-day rolling average sulfur content to be 0.5 weight percent sulfur or less.

(3) Method 6B may be used in lieu of CEMS to measure SO_2 at the inlet or outlet of the SO_2 control system. An initial stratification test is required to verify the adequacy of the Method 6B sampling location. The stratification test shall consist of three paired runs of a suitable SO_2 and carbon dioxide measurement train operated at the candidate location and a second similar train operated according to the procedures in § 3.2 and the applicable procedures in section 7 of Performance Specification 2 (appendix B). Method 6B, Method 6A, or a combination of Methods 6 and 3 or Methods 6C and 3A are suitable measurement techniques. If Method 6B is used for the second train, sampling time and timer operation may be adjusted for the stratification test as long as an adequate sample volume is collected; however, both sampling trains are to be operated similarly. For the location to be adequate for Method 6B 24-hour tests, the mean of the absolute difference between the three paired runs must be less than 10 percent (0.10).

(f) The owner or operator of an affected facility operating a CEMS pursuant to paragraph (a) of this section, or conducting as-fired fuel sampling pursuant to paragraph (d)(1) of this section, shall obtain emission data for at least 75 percent of the operating hours in at least 22 out of 30 successive steam generating unit operating days. If this minimum data requirement is not met with a single monitoring system, the owner or operator of the affected facility shall supplement the emission data with data collected with other monitoring systems as approved by the Administrator.

§ 60.47c Emission monitoring for particulate matter.

(a) The owner or operator of an affected facility combusting coal, oil, gas, or wood that is subject to the opacity standards under Sec. 60.43c shall install, calibrate, maintain, and operate a COMS for measuring the opacity of the emissions discharged to the atmosphere and record the output of the system, except as specified in paragraphs (c) and (d) of this section.

(b) All COMS for measuring opacity shall be operated in accordance with the applicable procedures under Performance Specification 1 (appendix B). The span value of the opacity COMS shall be between 60 and 80 percent.

(d) Owners or operators complying with the PM emission limit by using a PM CEMS monitor instead of monitoring opacity must calibrate, maintain, and operate a continuous monitoring system, and record the output of the system, for PM emissions discharged to the atmosphere as specified in Sec. 60.45c(d). The continuous monitoring systems specified in paragraph Sec. 60.45c(d) shall be operated and data recorded during all periods of operation of the affected facility except for continuous monitoring system breakdowns and repairs. Data is recorded during calibration checks, and zero and span adjustments.

§ 60.48c Reporting and recordkeeping requirements.

(a) The owner or operator of each affected facility shall submit notification of the date of construction or reconstruction, anticipated startup, and actual startup, as provided by § 60.7 of this part. This notification shall include:

(1) The design heat input capacity of the affected facility and identification of fuels to be combusted in the affected facility.

(2) If applicable, a copy of any Federally enforceable requirement that limits the annual capacity factor for any fuel or mixture of fuels under § 60.42c, or § 60.43c.

(3) The annual capacity factor at which the owner or operator anticipates operating the affected facility based on all fuels fired and based on each individual fuel fired.

(4) Notification if an emerging technology will be used for controlling SO2 emissions. The Administrator will examine the description of the control device and will determine whether the technology qualifies as an emerging technology. In making this determination, the Administrator may require the owner or operator of

the affected facility to submit additional information concerning the control device. The affected facility is subject to the provisions of § 60.42c(a) or (b)(1), unless and until this determination is made by the Administrator.

(f) Fuel supplier certification shall include the following information:

(1) For distillate oil:

(i) The name of the oil supplier; and

(ii) A statement from the oil supplier that the oil complies with the specifications under the definition of distillate oil in § 60.41c.

(2) For residual oil:

(i) The name of the oil supplier;

(ii) The location of the oil when the sample was drawn for analysis to determine the sulfur content of the oil, specifically including whether the oil was sampled as delivered to the affected facility, or whether the sample was drawn from oil in storage at the oil supplier's or oil refiner's facility, or other location;

(iii) The sulfur content of the oil from which the shipment came (or of the shipment itself); and

(iv) The method used to determine the sulfur content of the oil.

(g) The owner or operator of each affected facility shall record and maintain records of the amounts of each fuel combusted during each day. The owner or operator of an affected facility that only burns very low sulfur fuel oil or other liquid or gaseous fuels with potential sulfur dioxide emissions rate of 140 ng/J (0.32 lb/MMBtu) heat input or less shall record and maintain records of the fuels combusted during each calendar month.

(i) All records required under this section shall be maintained by the owner or operator of the affected facility for a period of two years following the date of such record.

(j) The reporting period for the reports required under this subpart is each six-month period. All reports shall be submitted to the Administrator and shall be postmarked by the 30th day following the end of each reporting period.

E.1.5 One Time Deadlines Relating to Standards of Performance for Small Industrial-Commercial-Institutional Steam Generating Units NSPS [40 CFR 60, Subpart Dc]:

The Permittee shall comply with the following notification requirements by the dates listed:

Requirement	Rule Cite	Affected Facility	Deadline
Submit notification of the date of construction or reconstruction, anticipated startup, and actual startup.	60.48c	B4	As provided by § 60.7 of this part.

Compliance Determination Requirements

E.1.6 Sulfur Dioxide Emissions and Sulfur Content

Compliance with Condition E.1.1 shall be determined utilizing one of the following options:

(a) Pursuant to 326 IAC 3-7-4, the Permittee shall demonstrate that the sulfur dioxide emissions do not exceed 1.6 pound per million Btu heat input by:

(1) Providing vendor analysis of fuel delivered, if accompanied by a vendor certification, or;

(2) Analyzing the oil sample to determine the sulfur content of the oil via the procedures in 40 CFR 60, Appendix A, Method 19.
   (A) Oil samples may be collected from the fuel tank immediately after the fuel tank is filled and before any oil is combusted; and
   (B) If a partially empty fuel tank is refilled, a new sample and analysis would be required upon filling.

(b) Compliance may also be determined by conducting a stack test for sulfur dioxide emissions from the boiler using 40 CFR 60, Appendix A, Method 6 in accordance with the procedures in 326 IAC 3-6.

A determination of noncompliance pursuant to any of the methods specified in (a) or (b) above shall not be refuted by evidence of compliance pursuant to the other method.

Compliance Monitoring Requirements [326 IAC 2-5.1-3(e)(2)] [326 IAC 2-6.1-5(a)(2)]

E.1.7 Visible Emissions Notations

(a) Visible emission notations of the boiler stack (B4) exhaust shall be performed once per day during normal daylight operations while combusting fuel oil. A trained employee shall record whether emissions are normal or abnormal.

(b) For processes operated continuously, "normal" means those conditions prevailing, or expected to prevail, eighty percent (80%) of the time the process is in operation, not counting startup or shut down time.

(c) In the case of batch or discontinuous operations, readings shall be taken during that part of the operation that would normally be expected to cause the greatest emissions.

(d) A trained employee is an employee who has worked at the plant at least one (1) month and has been trained in the appearance and characteristics of normal visible emissions for that specific process.

(e) If abnormal emissions are observed, the Permittee shall take reasonable response steps in accordance with Section C - Response to Excursions or Exceedances. Failure to take response steps in accordance with Section C - Response to Excursions or Exceedances, shall be considered a deviation from this permit.

Record Keeping and Reporting Requirement [326 IAC 2-7-5(3)] [326 IAC 2-7-19]

E.1.8 Record Keeping Requirements

(a) To document compliance with Conditions E.1.1 and E.1.2, the Permittee shall maintain records in accordance with (1) through (6) below.

(1) Calendar dates covered in the compliance determination period;
(2) Actual No. 6 residual fuel oil usage per month since last compliance determination period and equivalent SO_2 emissions;
(3) A certification, signed by the Permittee, that the records of the fuel supplier certifications represent all of the fuel combusted during the period; and

If the fuel supplier certification is used to demonstrate compliance the following, as a minimum, shall be maintained:

(4) Fuel supplier certifications.
(5) The name of the fuel supplier; and
(6) A statement from the fuel supplier that certifies the sulfur content of the fuel oil.

The Permittee shall retain records of all recording/monitoring data and support information for a period of five (5) years, or longer if specified elsewhere in this permit, from the date

of the monitoring sample, measurement, or report. Support information includes all calibration and maintenance records and all original strip-chart recordings for continuous monitoring instrumentation, and copies of all reports required by this permit.

(b) To document compliance with Condition E.1.7, the Permittee shall maintain records of visible emission notations of the boiler stack (B4) once per day.

(c) All records shall be maintained in accordance with Section C - General Record Keeping Requirements, of this permit.

E.1.9 Reporting Requirements

A quarterly summary of the information to document compliance with Condition E.1.2 shall be submitted to the address listed in Section C - General Reporting Requirements, of this permit, using the reporting forms located at the end of this permit, or their equivalent, within thirty (30) days after the end of the quarter being reported. The report submitted by the Permittee does require the certification by the “responsible official” as defined by 326 IAC 2-7-1(34).

SECTION E.2 **FACILITY OPERATION CONDITIONS**

Facility Description [326 IAC 2-8-4(10)]:

(pp) One (1) fixed roof, cone tank, internal floating roof, identified as Tank No. 175, with a capacity of 2,310,000 gallons and a maximum withdrawal rate of 210,000 gallons per hour of petroleum with vapor pressure of 13 RVP gasoline or less and exhausting to stack 130 (start construction in second quarter of 2007 and to be completed by February 2008);

Under the Standards of Performance for Volatile Organic Liquid Storage Vessels (Including Petroleum Liquid Storage Vessels) for Which Construction, Reconstruction, or Modification Commenced After July 23, 1984 [40 CFR Part 60, Subpart Kb], the Tank No. 175, is considered a new source.

(The information describing the process contained in this facility description box is descriptive information and does not constitute enforceable conditions.)

Emission Limitations and Standards [326 IAC 2-7-5(1)]

E.2.1 General Provisions Relating to NSPS [326 IAC 12-1-1] [40 CFR Part 60, Subpart A]

The provisions of 40 CFR Part 60, Subpart A - General Provisions, which are incorporated by reference in 326 IAC 12-1, apply to the facility described in this section except when otherwise specified in 40 CFR Part 60, Subpart Kb.

E.2.2 Standards of Performance for Volatile Organic Liquid Storage Vessels (Including Petroleum Liquid Storage Vessels) for Which Construction, Reconstruction, or Modification Commenced After July 23, 1984 [40 CFR Part 60, Subpart Kb]

Pursuant to 40 CFR Part 60, Subpart Kb, the Permittee shall comply with the provisions of the National Source Performance Standards for Volatile Organic Liquid Storage Vessels (Including Petroleum Liquid Storage Vessels) for Which Construction, Reconstruction, or Modification Commenced After July 23, 1984, as specified as follows.

§ 60.110b Applicability and designation of affected facility.

(a) Except as provided in paragraph (b) of this section, the affected facility to which this subpart applies is each storage vessel with a capacity greater than or equal to 75 cubic meters (m3) that is used to store volatile organic liquids (VOL) for which construction, reconstruction, or modification is commenced after July 23, 1984.

(b) This subpart does not apply to storage vessels with a capacity greater than or equal to 151m3 storing a liquid with a maximum true vapor pressure less than 3.5 kilopascals (kPa) or with a capacity greater than or equal to 75 m^3 but less than 151 m^3 storing a liquid with a maximum true vapor pressure less than 15.0 kPa.

(c) [Reserved]

(d) This subpart does not apply to the following:

(1) Vessels at coke oven by-product plants.

(2) Pressure vessels designed to operate in excess of 204.9 kPa and without emissions to the atmosphere.
(3) Vessels permanently attached to mobile vehicles such as trucks, rail-cars, barges, or ships.

(4) Vessels with a design capacity less than or equal to 1,589.874 m3 used for petroleum or condensate stored, processed, or treated prior to custody transfer.

(5) Vessels located at bulk gasoline plants.

(6) Storage vessels located at gasoline service stations.

(7) Vessels used to store beverage alcohol.

(8) Vessels subject to subpart GGGG of 40 CFR part 63.

(e) Alternative means of compliance -- (1) Option to comply with part 65. Owners or operators may choose to comply with 40 CFR part 65, subpart C, to satisfy the requirements of §§ 60.112b through 60.117b for storage vessels that are subject to this subpart that meet the specifications in paragraphs (e)(1)(i) and (ii) of this section. When choosing to comply with 40 CFR part 65, subpart C, the monitoring requirements of § 60.116b(c), (e), (f)(1), and (g) still apply. Other provisions applying to owners or operators who choose to comply with 40 CFR part 65 are provided in 40 CFR 65.1.

(i) A storage vessel with a design capacity greater than or equal to 151 m3 containing a VOL that, as stored, has a maximum true vapor pressure equal to or greater than 5.2 kPa; or

(ii) A storage vessel with a design capacity greater than 75 m3 but less than 151 m3 containing a VOL that, as stored, has a maximum true vapor pressure equal to or greater than 27.6 kPa.

(2) Part 60, subpart A. Owners or operators who choose to comply with 40 CFR part 65, subpart C, must also comply with §§ 60.1, 60.2, 60.5, 60.6, 60.7(a)(1) and (4), 60.14, 60.15, and 60.16 for those storage vessels. All sections and paragraphs of subpart A of this part that are not mentioned in this paragraph (e)(2) do not apply to owners or operators of storage vessels complying with 40 CFR part 65, subpart C, except that provisions required to be met prior to implementing 40 CFR part 65 still apply. Owners and operators who choose to comply with 40 CFR part 65, subpart C, must comply with 40 CFR part 65, subpart A.

(3) Internal floating roof report. If an owner or operator installs an internal floating roof and, at initial startup, chooses to comply with 40 CFR part 65, subpart C, a report shall be furnished to the Administrator stating that the control equipment meets the specifications of 40 CFR 65.43. This report shall be an attachment to the notification required by 40 CFR 65.5(b).

(4) External floating roof report. If an owner or operator installs an external floating roof and, at initial startup, chooses to comply with 40 CFR part 65, subpart C, a report shall be furnished to the Administrator stating that the control equipment meets the specifications of 40 CFR 65.44. This report shall be an attachment to the notification required by 40 CFR 65.5(b).

§ 60.111b Definitions.

Terms used in this subpart are defined in the Act, in subpart A of this part, or in this subpart as follows:

Bulk gasoline plant means any gasoline distribution facility that has a gasoline throughput less than or equal to 75,700 liters per day. Gasoline throughput shall be the maximum calculated design throughput as may be limited by compliance with an enforceable condition under Federal requirement or Federal, State or local law, and discoverable by the Administrator and any other person.

Condensate means hydrocarbon liquid separated from natural gas that condenses due to changes in the temperature or pressure, or both, and remains liquid at standard conditions.

Custody transfer means the transfer of produced petroleum and/or condensate, after processing and/or treatment in the producing operations, from storage vessels or automatic transfer facilities to pipelines or any other forms of transportation.

Fill means the introduction of VOL into a storage vessel but not necessarily to complete capacity.

Gasoline service station means any site where gasoline is dispensed to motor vehicle fuel tanks from stationary storage tanks.

Maximum true vapor pressure means the equilibrium partial pressure exerted by the volatile organic compounds (as defined in 40 CFR 51.100) in the stored VOL at the temperature equal to the highest

calendar-month average of the VOL storage temperature for VOL's stored above or below the ambient temperature or at the local maximum monthly average temperature as reported by the National Weather Service for VOL's stored at the ambient temperature, as determined:

(1) In accordance with methods de-scribed in American Petroleum institute Bulletin 2517, Evaporation Loss From External Floating Roof Tanks, (incorporated by reference—see § 60.17); or

(2) As obtained from standard reference texts; or

(3) As determined by ASTM Method D2879–83, 96, or 97 (incorporated by reference— see § 60.17);

(4) Any other method approved by the Administrator.

Reid vapor pressure means the absolute vapor pressure of volatile crude oil and volatile nonviscous petroleum liquids except liquified petroleum gases, as determined by ASTM D323–82 or 94 (incorporated by reference—see § 60.17).

Petroleum means the crude oil removed from the earth and the oils derived from tar sands, shale, and coal.

Petroleum liquids means petroleum, condensate, and any finished or intermediate products manufactured in a petroleum refinery.

Process tank means a tank that is used within a process (including a solvent or raw material recovery process) to collect material discharged from a feedstock storage vessel or equipment within the process before the material is transferred to other equipment within the process, to a product or by-product storage vessel, or to a vessel used to store recovered solvent or raw material. In many process tanks, unit operations such as reactions and blending are conducted. Other process tanks, such as surge control vessels and bottoms receivers, however, may not involve unit operations.

Storage vessel means each tank, reservoir, or container used for the storage of volatile organic liquids but does not include:

(1) Frames, housing, auxiliary supports, or other components that are not directly involved in the containment of liquids or vapors;

(2) Subsurface caverns or porous rock reservoirs; or

(3) Process tanks.

Volatile organic liquid (VOL) means any organic liquid which can emit volatile organic compounds (as defined in 40 CFR 51.100) into the atmosphere.

Waste means any liquid resulting from industrial, commercial, mining or agricultural operations, or from community activities that is discarded or is being accumulated, stored, or physically, chemically, or biologically treated prior to being discarded or recycled.
[52 FR 11429, Apr. 8, 1987, as amended at 54 FR 32973, Aug. 11, 1989]

§ 60.112b Standard for volatile organic compounds (VOC).

(a) The owner or operator of each storage vessel either with a design capacity greater than or equal to 151 m3 containing a VOL that, as stored, has a maximum true vapor pressure equal to or greater than 5.2 kPa but less than 76.6 kPa or with a design capacity greater than or equal to 75 m3 but less than 151 m3 containing a VOL that, as stored, has a maximum true vapor pressure equal to or greater than 27.6 kPa but less than 76.6 kPa, shall equip each storage vessel with one of the following:

(1) A fixed roof in combination with an internal floating roof meeting the following specifications:

(i) The internal floating roof shall rest or float on the liquid surface (but not necessarily in complete contact with it) inside a storage vessel that has a fixed roof. The internal floating roof shall be floating on the liquid

surface at all times, except during initial fill and during those intervals when the storage vessel is completely emptied or subsequently emptied and refilled. When the roof is resting on the leg supports, the process of filling, emptying, or refilling shall be continuous and shall be accomplished as rapidly as possible.

(ii) Each internal floating roof shall be equipped with one of the following closure devices between the wall of the storage vessel and the edge of the internal floating roof:

(A) A foam- or liquid-filled seal mounted in contact with the liquid (liquid-mounted seal). A liquid-mounted seal means a foam- or liquid-filled seal mounted in contact with the liquid between the wall of the storage vessel and the floating roof continuously around the circumference of the tank.

(B) Two seals mounted one above the other so that each forms a continuous closure that completely covers the space between the wall of the storage vessel and the edge of the internal floating roof. The lower seal may be vapor-mounted, but both must be continuous.

(C) A mechanical shoe seal. A mechanical shoe seal is a metal sheet held vertically against the wall of the storage vessel by springs or weighted levers and is connected by braces to the floating roof. A flexible coated fabric (envelope) spans the annular space between the metal sheet and the floating roof.

(iii) Each opening in a noncontact internal floating roof except for automatic bleeder vents (vacuum breaker vents) and the rim space vents is to provide a projection below the liquid surface.

(iv) Each opening in the internal floating roof except for leg sleeves, automatic bleeder vents, rim space vents, column wells, ladder wells, sample wells, and stub drains is to be equipped with a cover or lid which is to be maintained in a closed position at all times (i.e., no visible gap) except when the device is in actual use. The cover or lid shall be equipped with a gasket. Covers on each access hatch and automatic gauge float well shall be bolted except when they are in use.

(v) Automatic bleeder vents shall be equipped with a gasket and are to be closed at all times when the roof is floating except when the roof is being floated off or is being landed on the roof leg supports.

(vi) Rim space vents shall be equipped with a gasket and are to be set to open only when the internal floating roof is not floating or at the manufacturer’s recommended setting.

(vii) Each penetration of the internal floating roof for the purpose of sampling shall be a sample well. The sample well shall have a slit fabric cover that covers at least 90 percent of the opening.

(viii) Each penetration of the internal floating roof that allows for passage of a column supporting the fixed roof shall have a flexible fabric sleeve seal or a gasketed sliding cover.

(ix) Each penetration of the internal floating roof that allows for passage of a ladder shall have a gasketed sliding cover.

[52 FR 11429, Apr. 8, 1987, as amended at 62 FR 52641, Oct. 8, 1997]

§ 60.113b Testing and procedures.

The owner or operator of each storage vessel as specified in § 60.112b(a) shall meet the requirements of paragraph (a), (b), or (c) of this section. The applicable paragraph for a particular storage vessel depends on the control equipment installed to meet the requirements of § 60.112b.

(a) After installing the control equipment required to meet § 60.112b(a)(1) (permanently affixed roof and internal floating roof), each owner or operator shall:

(1) Visually inspect the internal floating roof, the primary seal, and the secondary seal (if one is in service), prior to filling the storage vessel with VOL. If there are holes, tears, or other openings in the primary seal, the secondary seal, or the seal fabric or defects in the internal floating roof, or both, the owner or operator shall repair the items before filling the storage vessel.

(2) For Vessels equipped with a liquid-mounted or mechanical shoe primary seal, visually inspect the internal floating roof and the primary seal or the secondary seal (if one is in service) through manholes and roof hatches on the fixed roof at least once every 12 months after initial fill. If the internal floating roof is not resting on the surface of the VOL inside the storage vessel, or there is liquid accumulated on the roof, or the seal is detached, or there are holes or tears in the seal fabric, the owner or operator shall repair the items or empty and remove the storage vessel from service within 45 days. If a failure that is detected during inspections required in this paragraph cannot be repaired within 45 days and if the vessel cannot be emptied within 45 days, a 30-day extension may be requested from the Administrator in the inspection report required in § 60.115b(a)(3). Such a request for an extension must document that alternate storage capacity is unavailable and specify a schedule of actions the company will take that will assure that the control equipment will be repaired or the vessel will be emptied as soon as possible.

(3) For vessels equipped with a double-seal system as specified in § 60.112b(a)(1)(ii)(B):

(i) Visually inspect the vessel as specified in paragraph (a)(4) of this section at least every 5 years; or

(ii) Visually inspect the vessel as specified in paragraph (a)(2) of this section.

(4) Visually inspect the internal floating roof, the primary seal, the secondary seal (if one is in service), gaskets, slotted membranes and sleeve seals (if any) each time the storage vessel is emptied and degassed. If the internal floating roof has defects, the primary seal has holes, tears, or other openings in the seal or the seal fabric, or the secondary seal has holes, tears, or other openings in the seal or the seal fabric, or the gaskets no longer close off the liquid surfaces from the atmosphere, or the slotted membrane has more than 10 percent open area, the owner or operator shall repair the items as necessary so that none of the conditions specified in this paragraph exist before refilling the storage vessel with VOL. In no event shall inspections conducted in accordance with this provision occur at intervals greater than 10 years in the case of vessels conducting the annual visual inspection as specified in paragraphs (a)(2) and (a)(3)(ii) of this section and at intervals no greater than 5 years in the case of vessels specified in paragraph (a)(3)(i) of this section.

(5) Notify the Administrator in writing at least 30 days prior to the filling or refilling of each storage vessel for which an inspection is required by paragraphs (a)(1) and (a)(4) of this section to afford the Administrator the opportunity to have an observer present. If the inspection required by paragraph (a)(4) of this section is not planned and the owner or operator could not have known about the inspection 30 days in advance or refilling the tank, the owner or operator shall notify the Administrator at least 7 days prior to the refilling of the storage vessel. Notification shall be made by telephone immediately followed by written documentation demonstrating why the inspection was unplanned. Alternatively, this notification including the written documentation may be made in writing and sent by express mail so that it is received by the Administrator at least 7 days prior to the refilling.

[52 FR 11429, Apr. 8, 1987, as amended at 54 FR 32973, Aug. 11, 1989]

§ 60.114b Alternative means of emission limitation.

(a) If, in the Administrator's judgment, an alternative means of emission limitation will achieve a reduction in emissions at least equivalent to the reduction in emissions achieved by any requirement in § 60.112b, the Administrator will publish in the FEDERAL REGISTER a notice permitting the use of the alternative means for purposes of compliance with that requirement.

(b) Any notice under paragraph (a) of this section will be published only after notice and an opportunity for a hearing.

(c) Any person seeking permission under this section shall submit to the Administrator a written application including:

(1) An actual emissions test that uses a full-sized or scale-model storage vessel that accurately collects and measures all VOC emissions from a given control device and that accurately simulates wind and accounts for other emission variables such as temperature and barometric pressure.

(2) An engineering evaluation that the Administrator determines is an accurate method of determining equivalence.

(d) The Administrator may condition the permission on requirements that may be necessary to ensure operation and maintenance to achieve the same emissions reduction as specified in § 60.112b.

§ 60.115b Reporting and recordkeeping requirements.

The owner or operator of each storage vessel as specified in § 60.112b(a) shall keep records and furnish reports as required by paragraphs (a), (b), or (c) of this section depending upon the control equipment installed to meet the requirements of § 60.112b. The owner or operator shall keep copies of all reports and records required by this section, except for the record required by (c)(1), for at least 2 years. The record required by (c)(1) will be kept for the life of the control equipment.

(a) After installing control equipment in accordance with § 60.112b(a)(1) (fixed roof and internal floating roof), the owner or operator shall meet the following requirements.

(1) Furnish the Administrator with a report that describes the control equipment and certifies that the control equipment meets the specifications of § 60.112b(a)(1) and § 60.113b(a)(1). This report shall be an attachment to the notification required by § 60.7(a)(3).

(2) Keep a record of each inspection performed as required by § 60.113b (a)(1), (a)(2), (a)(3), and (a)(4). Each record shall identify the storage vessel on which the inspection was performed and shall contain the date the vessel was inspected and the observed condition of each component of the control equipment (seals, internal floating roof, and fittings).

(3) If any of the conditions described in § 60.113b(a)(2) are detected during the annual visual inspection required by § 60.113b(a)(2), a report shall be furnished to the Administrator within 30 days of the inspection. Each report shall identify the storage vessel, the nature of the defects, and the date the storage vessel was emptied or the nature of and date the repair was made.
(4) After each inspection required by § 60.113b(a)(3) that finds holes or tears in the seal or seal fabric, or defects in the internal floating roof, or other control equipment defects listed in § 60.113b(a)(3)(ii), a report shall be furnished to the Administrator within 30 days of the inspection. The report shall identify the storage vessel and the reason it did not meet the specifications of § 61.112b(a)(1) or § 60.113b(a)(3) and list each repair made.

§ 60.116b Monitoring of operations.

(a) The owner or operator shall keep copies of all records required by this section, except for the record required by paragraph (b) of this section, for at least 2 years. The record required by paragraph (b) of this section will be kept for the life of the source.

(b) The owner or operator of each storage vessel as specified in § 60.110b(a) shall keep readily accessible records showing the dimension of the storage vessel and an analysis showing the capacity of the storage vessel.

(c) Except as provided in paragraphs (f) and (g) of this section, the owner or operator of each storage vessel either with a design capacity greater than or equal to 151 m 3 storing a liquid with a maximum true vapor pressure greater than or equal to 3.5 kPa or with a design capacity greater than or equal to 75 m 3 but less than 151 m 3 storing a liquid with a maximum true vapor pressure greater than or equal to 15.0 kPa shall maintain a record of the VOL stored, the period of storage, and the maximum true vapor pressure of that VOL during the respective storage period.

(d) Except as provided in paragraph (g) of this section, the owner or operator of each storage vessel either with a design capacity greater than or equal to 151 m 3 storing a liquid with a maximum true vapor pressure that is normally less than 5.2 kPa or with a design capacity greater than or equal to 75 m 3 but less than 151 m 3 storing a liquid with a maximum true vapor pressure that is normally less than 27.6 kPa shall notify the Administrator within 30 days when the maximum true vapor pressure of the liquid exceeds the respective maximum true vapor vapor pressure values for each volume range.

(e) Available data on the storage temperature may be used to determine the maximum true vapor pressure as determined below.

(1) For vessels operated above or below ambient temperatures, the maximum true vapor pressure is calculated based upon the highest expected calendar-month average of the storage temperature. For vessels operated at ambient temperatures, the maximum true vapor pressure is calculated based upon the maximum local monthly average ambient temperature as reported by the National Weather Service.

(2) For crude oil or refined petroleum products the vapor pressure may be obtained by the following:

(i) Available data on the Reid vapor pressure and the maximum expected storage temperature based on the highest expected calendar-month average temperature of the stored product may be used to determine the maximum true vapor pressure from nomographs contained in API Bulletin 2517 (incorporated by reference—see § 60.17), unless the Administrator specifically requests that the liquid be sampled, the actual storage temperature determined, and the Reid vapor pressure determined from the sample(s).

(ii) The true vapor pressure of each type of crude oil with a Reid vapor pressure less than 13.8 kPa or with physical properties that preclude determination by the recommended method is to be determined from available data and recorded if the estimated maximum true vapor pressure is greater than 3.5 kPa.

(3) For other liquids, the vapor pressure:

(i) May be obtained from standard reference texts, or
(ii) Determined by ASTM Method D2879–83, 96, or 97 (incorporated by reference— see § 60.17); or

(iii) Measured by an appropriate method approved by the Administrator; or

(iv) Calculated by an appropriate method approved by the Administrator.

(f) The owner or operator of each vessel storing a waste mixture of indeterminate or variable composition shall be subject to the following requirements.

(1) Prior to the initial filling of the vessel, the highest maximum true vapor pressure for the range of anticipated liquid compositions to be stored will be determined using the methods described in paragraph (e) of this section.

(2) For vessels in which the vapor pressure of the anticipated liquid composition is above the cutoff for monitoring but below the cutoff for controls as defined in §60.112b(a), an initial physical test of the vapor pressure is required; and a physical test at least once every 6 months thereafter is required as determined by the following methods:

(i) ASTM Method D2879–83, 96, or 97 (incorporated by reference—see § 60.17); or

(ii) ASTM Method D323–82 or 94 (incorporated by reference—see §60.17); or

(iii) As measured by an appropriate method as approved by the Administrator.

§ 60.117b Delegation of authority.

(a) In delegating implementation and enforcement authority to a State under section 111(c) of the Act, the authorities contained in paragraph (b) of this section shall be retained by the Administrator and not transferred to a State.

(b) Authorities which will not be delegated to States: §§ 60.111b(f)(4), 60.114b, 60.116b(e)(3)(iii), 60.116b(e)(3)(iv), and 60.116b(f)(2)(iii).

[52 FR 11429, Apr. 8, 1987, as amended at 52 FR 22780, June 16, 1987]

SECTION E.3 **FACILITY OPERATION CONDITIONS**

Facility Description [326 IAC 2-8-4(10)]:

(oo) One (1) no. 4 boiler, constructed in 2006, with a maximum heat input rate of 84.9 MMBtu/hr of process gas and/or No. 6 residual oil and/or natural gas, identified as B4 and exhausting to stack 131.

(The information describing the process contained in this facility description box is descriptive information and does not constitute enforceable conditions.)

E.3.1 General Provisions Relating to NSPS [326 IAC 12-1-1] [40 CFR Part 60, Subpart A]

The provisions of 40 CFR Part 60, Subpart A - General Provisions, which are incorporated by reference in 326 IAC 12-1, apply to the facility described in this section except when otherwise specified in 40 CFR Part 60, Subpart J.

E.3.2 Standards of Performance for Petroleum Refineries [40 CFR Part 60, Subpart J]

Pursuant to 40 CFR Part 60, Subpart J, the Permittee shall comply with the provisions of the National Source Performance Standards for Petroleum Refineries, as specified as follows.

§ 60.100 Applicability, designation of affected facility, and reconstruction.

(a) The provisions of this subpart are applicable to the following affected facilities in petroleum refineries: fluid catalytic cracking unit catalyst regenerators, fuel gas combustion devices, and all Claus sulfur recovery plants except Claus plants of 20 long tons per day (LTD) or less. The Claus sulfur recovery plant need not be physically located within the boundaries of a petroleum refinery to be an affected facility, provided it processes gases produced within a petroleum refinery.

(b) Any fluid catalytic cracking unit catalyst regenerator or fuel gas combustion device under paragraph (a) of this section which commences construction or modification after June 11, 1973, or any Claus sulfur recovery plant under paragraph (a) of this section which commences construction or modification after October 4, 1976, is subject to the requirements of this sub-part except as provided under paragraphs (c) and (d) of this section.

(c) Any fluid catalytic cracking unit catalyst regenerator under paragraph (b) of this section which commences construction or modification on or before January 17, 1984, is exempted from § 60.104(b).

(d) Any fluid catalytic cracking unit in which a contact material reacts with petroleum derivatives to improve feedstock quality and in which the contact material is regenerated by burning off coke and/or other deposits and that commences construction or modification on or before January 17, 1984, is exempt from this subpart.

(e) For purposes of this subpart, under § 60.15, the ‘‘fixed capital cost of the new components’’ includes the fixed capital cost of all depreciable components which are or will be replaced pursuant to all continuous programs of component replacement which are commenced within any 2-year period following January 17, 1984. For purposes of this paragraph, ‘‘commenced’’ means that an owner or operator has undertaken a continuous program of component replacement or that an owner or operator has entered into a contractual obligation to under-take and complete, within a reasonable time, a continuous program of component replacement.

§ 60.101 Definitions.

As used in this subpart, all terms not defined herein shall have the meaning given them in the Act and in subpart A.

(a) *Petroleum refinery* means any facility engaged in producing gasoline, kerosene, distillate fuel oils, residual fuel oils, lubricants, or other products through distillation of petroleum or through redistillation, cracking or reforming of unfinished petroleum derivatives.

(b) *Petroleum* means the crude oil removed from the earth and the oils derived from tar sands, shale, and coal.

(c) *Process gas* means any gas generated by a petroleum refinery process unit, except fuel gas and process upset gas as defined in this section.

(d) *Fuel gas* means any gas which is generated at a petroleum refinery and which is combusted. Fuel gas also includes natural gas when the natural gas is combined and combusted in any proportion with a gas generated at a refinery. Fuel gas does not include gases generated by catalytic cracking unit catalyst regenerators and fluid coking burners.

(e) *Process upset gas* means any gas generated by a petroleum refinery process unit as a result of start-up, shut-down, upset or malfunction.

(f) *Refinery process unit* means any segment of the petroleum refinery in which a specific processing operation is conducted.

(g) *Fuel gas combustion device* means any equipment, such as process heaters, boilers and flares used to combust fuel gas, except facilities in which gases are combusted to produce sulfur or sulfuric acid.

(h) *Coke burn-off* means the coke removed from the surface of the fluid catalytic cracking unit catalyst by combustion in the catalyst regenerator. The rate of coke burn-off is calculated by the formula specified in § 60.106.

(i) *Claus sulfur recovery plant* means a process unit which recovers sulfur from hydrogen sulfide by a vapor-phase catalytic reaction of sulfur dioxide and hydrogen sulfide.

(j) *Oxidation control system* means an emission control system which reduces emissions from sulfur recovery plants by converting these emissions to sulfur dioxide.

(k) *Reduction control system* means an emission control system which reduces emissions from sulfur recovery plants by converting these emissions to hydrogen sulfide.

(l) *Reduced sulfur compounds* means hydrogen sulfide (H2S), carbonyl sulfide (COS) and carbon disulfide (CS2).

(m) *Fluid catalytic cracking unit* means a refinery process unit in which petroleum derivatives are continuously charged; hydrocarbon molecules in the presence of a catalyst suspended in a fluidized bed are fractured into smaller molecules, or react with a contact material suspended in a fluidized bed to improve feedstock quality for additional processing; and the catalyst or contact material is continuously re-generated by burning off coke and other deposits. The unit includes the riser, reactor, regenerator, air blowers, spent catalyst or contact material stripper, catalyst or contact material recovery equipment, and regenerator equipment for controlling air pollutant emissions and for heat recovery.

(n) *Fluid catalytic cracking unit catalyst regenerator* means one or more regenerators (multiple regenerators) which comprise that portion of the fluid catalytic cracking unit in which coke burn-off and catalyst or contact material regeneration occurs, and includes the regenerator combustion air blower(s).

(o) *Fresh feed* means any petroleum derivative feedstock stream charged directly into the riser or reactor of a fluid catalytic cracking unit except for petroleum derivatives recycled within the fluid catalytic cracking unit, fractionator, or gas recovery unit.

(p) *Contact material* means any substance formulated to remove metals, sulfur, nitrogen, or any other contaminant from petroleum derivatives.

(q) *Valid day* means a 24-hour period in which at least 18 valid hours of data are obtained. A ‘‘valid hour’’ is one in which at least 2 valid data points are obtained.

§ 60.104 Standards for sulfur oxides.

Each owner or operator that is subject to the requirements of this subpart shall comply with the emission limitations set forth in this section on and after the date on which the initial performance test, required by § 60.8, is completed, but not later than 60 days after achieving the maximum production rate at which the affected facility will be operated, or 180 days after initial startup, whichever comes first.

(a) No owner or operator subject to the provisions of this subpart shall:
(1) Burn in any fuel gas combustion device any fuel gas that contains hydrogen sulfide (H2S) in excess of 230 mg/dscm (0.10 gr/dscf). The combustion in a flare of process upset gases or fuel gas that is released to the flare as a result of relief valve leakage or other emergency malfunctions is exempt from this paragraph.

§ 60.105 Monitoring of emissions and operations.

(a) Continuous monitoring systems shall be installed, calibrated, maintained, and operated by the owner or operator subject to the provisions of this subpart as follows:
(3) For fuel gas combustion devices subject to § 60.104(a)(1), an instrument for continuously monitoring and recording the concentration by volume (dry basis, zero percent excess air) of SO2 emissions into the atmosphere (except where an H2S monitor is installed under paragraph (a)(4) of this section). The monitor shall include an oxygen monitor for correcting the data for excess air.
(i) The span values for this monitor are 50 ppm SO2 and 25 percent oxygen (O2).
(ii) The SO2 monitoring level equivalent to the H2S standard under § 60.104(a)(1) shall be 20 ppm (dry basis, zero percent excess air).
(iii) The performance evaluations for this SO2 monitor under § 60.13(c) shall use Performance Specification 2. Methods 6 or 6C and 3 or 2A shall be used for conducting the relative accuracy evaluations. Method 6 samples shall be taken at a flow rate of approximately 2 liters/min for at least 30 minutes. The relative accuracy limit shall be 20 percent or 4 ppm, whichever is greater, and the calibration drift limit shall be 5 percent of the established span value.
(iv) Fuel gas combustion devices having a common source of fuel gas may be monitored at only one location (i.e., after one of the combustion devices), if monitoring at this location accurately represents the S2 emissions into the atmosphere from each of the combustion devices.

(4) In place of the SO2 monitor in paragraph (a)(3) of this section, an instrument for continuously monitoring and recording the concentration (dry basis) of H2S in fuel gases before being burned in any fuel gas combustion device.
(i) The span value for this instrument is 425 mg/dscm H2S.
(ii) Fuel gas combustion devices having a common source of fuel gas may be monitored at only one location, if monitoring at this location accurately represents the concentration of H2S in the fuel gas being burned.
(iii) The performance evaluations for this H2S monitor under § 60.13(c) shall use Performance Specification 7. Method 11, 15, 15A, or 16 shall be used for conducting the relative accuracy evaluations.
(b) [Reserved]

(e) For the purpose of reports under § 60.7(c), periods of excess emissions that shall be determined and reported are defined as follows:

NOTE: All averages, except for opacity, shall be determined as the arithmetic aver-age of the applicable 1-hour averages, e.g., the rolling 3-hour average shall be deter-mined as the arithmetic average of three contiguous 1-hour averages.

(1) *Opacit*y. All 1-hour periods that contain two or more 6-minute periods during which the average opacity as measured by the continuous monitoring system under § 60.105(a)(1) exceeds 30 percent.

(3) *Sulfur dioxide from fuel gas combustio*n.
(i) All rolling 3-hour periods during which the average concentration of SO2 as measured by the SO2 continuous monitoring system under § 60.105(a)(3) exceeds 20 ppm (dry basis, zero percent excess air); or

(ii) All rolling 3-hour periods during which the average concentration of H2S as measured by the H2S continuous monitoring system under § 60.105(a)(4) exceeds 230 mg/dscm (0.10 gr/dscf).

§ 60.106 Test methods and procedures.

(a) In conducting the performance tests required in § 60.8, the owner or operator shall use as reference methods and procedures the test methods in appendix A of this part or other methods and procedures as specified in this section, except as provided in § 60.8(b).

(e)(1) The owner or operator shall determine compliance with the H_2S standard in § 60.104(a)(1) as follows: Method 11, 15, 15A, or 16 shall be used to determine the H_2S concentration. The gases entering the sampling train should be at about atmospheric pressure. If the pressure in the refinery fuel gas lines is relatively high, a flow control valve may be used to reduce the pressure. If the line pressure is high enough to operate the sampling train without a vacuum pump, the pump may be eliminated from the sampling train. The sample shall be drawn from a point near the centroid of the fuel gas line.
(i) For Method 11, the sampling time and sample volume shall be at least 10 minutes and 0.010 dscm (0.35 dscf). Two samples of equal sampling times shall be taken at about 1-hour intervals. The arithmetic average of these two samples shall constitute a run. For most fuel gases, sampling times exceeding 20 minutes may result in depletion of the collection solution, although fuel gases containing low concentrations of H_2S may necessitate sampling for longer periods of time.
(ii) For Method 15 or 16, at least three injects over a 1-hour period shall constitute a run.
(iii) For Method 15A, a 1-hour sample shall constitute a run.
(2) Where emissions are monitored by § 60.105(a)(3), compliance with § 60.105(a)(1) shall be determined using Method 6 or 6C and Method 3 or 3A. A 1-hour sample shall constitute a run. Method 6 samples shall be taken at a rate of approximately 2 liters/min. The ppm correction factor (Method 6) and the sampling location in paragraph (f)(1) of this section apply. Method 4 shall be used to determine the moisture content of the gases. The sampling point for Method 4 shall be adjacent to the sampling point for Method 6 or 6C.

§ 60.107 Reporting and recordkeeping requirements.

(d) For any periods for which sulfur dioxide or oxides emissions data are not available, the owner or operator of the affected facility shall submit a signed statement indicating if any changes were made in operation of the emission control system during the period of data unavailability which could affect the ability of the system to meet the applicable emission limit. Operations of the control system and affected facility during periods of data unavailability are to be compared with operation of the control system and affected facility before and following the period of data unavailability.

(e) The owner or operator of an affected facility shall submit the reports required under this subpart to the Administrator semiannually for each six-month period. All semiannual reports shall be postmarked by the 30th day following the end of each six-month period.

(f) The owner or operator of the affected facility shall submit a signed statement certifying the accuracy and completeness of the information contained in the report.

§ 60.108 Performance test and compliance provisions.

(a) Section 60.8(d) shall apply to the initial performance test specified under paragraph (c) of this section, but not to the daily performance tests required thereafter as specified in § 60.108(d). Section 60.8(f) does not apply when determining compliance with the standards specified under § 60.104(b). Performance tests conducted for the purpose of determining compliance under § 60.104(b) shall be conducted according to the applicable procedures specified under § 60.106.

§ 60.109 Delegation of authority.
(a) In delegating implementation and enforcement authority to a State under section 111(c) of the Act, the authorities contained in paragraph (b) of this section shall be retained by the Administrator and not transferred to a State.
(b) Authorities which shall not be delegated to States:
(1) Section 60.105(a)(13)(iii),
(2) Section 60.106(i)(12).

SECTION E.4 FACILITY OPERATION CONDITIONS

Facility Description [326 IAC 2-7-5(15)]

(qq) One (1) Low Sulfur Gasoline (LSG) Unit consisting of the following equipment:

(1) LSG Reactor Charge Heater (810-H101) approved for construction in 2008, with a maximum capacity of 5.985 MMBtu, combusting refinery fuel gas only, and venting to stack 128.

Under 40 CFR Part 60, Subpart Ja (currently under stay) the LSG Reactor Charge Heater is considered an affected facility.

(2) #5 Cooling Tower with a maximum capacity of 3,600 gpm approved for construction in 2008.

(3) LSG Unit components and drains (800 valves, 16 drains, and 5 pumps) approved for construction in 2008.

Under 40 CFR 63, Subpart CC, equipment leaks associated with a petroleum refinery are considered as an affected facility.

Under 40 CFR 60, Subpart QQQ, new and existing drains are considered affected facilities at a petroleum refinery.

Under 40 CFR 60, Subpart GGGa, valves are considered affected facilities at a petroleum refinery.

Under 40 CFR 61, Subpart FF new and existing drains are considered affected facilities for benzene waste operations.

(The information describing the process contained in this facility description box is descriptive information and does not constitute enforceable conditions.)

E.4.1 General Provisions Relating to NESHAP Subpart FF [40 CFR Part 61, Subpart A]

Pursuant to 40 CFR 61.340, the Permittee shall comply with the provisions of 40 CFR Part 61, Subpart A – General Provisions, which are incorporated by reference as 326 IAC 14-1-1, except as otherwise specified in 40 CFR Part 61, Subpart FF.

E.4.2 Benzene Waste Operations NESHAP [40 CFR Part 61, Subpart FF]

The Permittee which engages benzene waste operations shall comply with the following provisions of 40 CFR Part 61, Subpart FF (included as Attachment A of this permit).

(1) 40 CFR 61.340
(2) 40 CFR 61.341
(3) 40 CFR 61.342(a)
(4) 40 CFR 61.355
(5) 40 CFR 61.356(a)(b)(1)
(6) 40 CFR 61.357(a)(c)

SECTION E.5 FACILITY OPERATION CONDITIONS

Facility Description [326 IAC 2-7-5(15)]

(qq) One (1) Low Sulfur Gasoline (LSG) Unit consisting of the following equipment:

(1) LSG Reactor Charge Heater (810-H101) approved for construction in 2008, with a maximum capacity of 5.985 MMBtu, combusting refinery fuel gas only, and venting to stack 128.

Under 40 CFR Part 60, Subpart Ja (currently under stay) the LSG Reactor Charge Heater is considered an affected facility.

(2) #5 Cooling Tower with a maximum capacity of 3,600 gpm approved for construction in 2008.

(3) LSG Unit components and drains (800 valves, 16 drains, and 5 pumps) approved for construction in 2008.

Under 40 CFR 63, Subpart CC, equipment leaks associated with a petroleum refinery are considered as an affected facility.

Under 40 CFR 60, Subpart QQQ, new and existing drains are considered affected facilities at a petroleum refinery.

Under 40 CFR 60, Subpart GGGa, valves are considered affected facilities at a petroleum refinery.

Under 40 CFR 61, Subpart FF new and existing drains are considered affected facilities for benzene waste operations.

(The information describing the process contained in this facility description box is descriptive information and does not constitute enforceable conditions.)

E.5.1 General Provisions Relating to NSPS Subpart GGGa [40 CFR Part 60, Subpart A]

Pursuant to 40 CFR 60.1, the Permittee shall comply with the provisions of 40 CFR Part 60, Subpart A – General Provisions, which are incorporated by reference as 326 IAC 12, except as otherwise specified in 40 CFR Part 60, Subpart GGGa.

E.5.2 Standards of Performance for Equipment Leaks of VOC in Petroleum Refineries for Which Construction, Reconstruction, or Modification Commenced After November 7, 2006 NSPS [40 CFR Part 60, Subpart GGGa]

The Permittee which engages in petroleum refineries for which construction, reconstruction, or modification commenced after November 7, 2006 shall comply with the following provisions of 40 CFR Part 60, Subpart GGGa, (included as Attachment B of this permit).

(1) 40 CFR 60.590a

(2) 40 CFR 60.591a

(3) 40 CFR 60.592a

SECTION E.6 FACILITY OPERATION CONDITIONS

Facility Description [326 IAC 2-7-5(15)]

(e) One (1) Main Refinery Flare, identified as RCD-1 with a maximum heat input rate of 371 MMBtu/hr of refinery fuel gas/process gas (with capacity for a supplementary pilot fuel heat input rate of 3.0 MMBtu/hr), installed in 1945 and replaced in 2006 and exhausting to stack 118;

Under 40 CFR Part 60, Subpart Ja (currently under stay) the Main Refinery Flare is considered an affected facility.

(qq) One (1) Low Sulfur Gasoline (LSG) Unit consisting of the following equipment:

(1) LSG Reactor Charge Heater (810-H101) approved for construction in 2008, with a maximum capacity of 5.985 MMBtu, combusting refinery fuel gas only, and venting to stack 128.

Under 40 CFR Part 60, Subpart Ja (currently under stay) the LSG Reactor Charge Heater is considered an affected facility.

(2) #5 Cooling Tower with a maximum capacity of 3,600 gpm approved for construction in 2008.

(3) LSG Unit components and drains (800 valves, 16 drains, and 5 pumps) approved for construction in 2008.

Under 40 CFR 63, Subpart CC, equipment leaks associated with a petroleum refinery are considered as an affected facility.

Under 40 CFR 60, Subpart QQQ, new and existing drains are considered affected facilities at a petroleum refinery.

Under 40 CFR 60, Subpart GGGa, valves are considered affected facilities at a petroleum refinery.

Under 40 CFR 61, Subpart FF new and existing drains are considered affected facilities for benzene waste operations.

(The information describing the process contained in this facility description box is descriptive information and does not constitute enforceable conditions.)

E.6.1 General Provisions Relating to NSPS Subpart Ja [40 CFR Part 60, Subpart A]

Pursuant to 40 CFR 60.1, the Permittee shall comply with the provisions of 40 CFR Part 60, Subpart A – General Provisions, which are incorporated by reference as 326 IAC 12, except as otherwise specified in 40 CFR Part 60, Subpart Ja.

E.6.2 Standards of Performance for Petroleum Refineries for Which Construction, Reconstruction, or Modification Commenced After May 14, 2007 NSPS [40 CFR Part 60, Subpart Ja (Currently Under Stay Until September 26, 2008)]

The Permittee which engages in petroleum refineries for which construction, reconstruction, or modification commenced after May 14, 2007 shall comply with the following provisions of 40 CFR Part 60, Subpart Ja, (included as Attachment C of this permit).

(1) 40 CFR 60.100a

(2) 40 CFR 60.101a

(3) 40 CFR 60.102a(g)

(4) 40 CFR 60.103a(a)(b)

(5) 40 CFR 60.104a(j)(4)(iv)

(6) 40 CFR 60.107a(a)(2)(d)(e)

(7) 40 CFR 60.108a

(8) If the rule language should change after the stay the changes shall also apply.

INDIANA DEPARTMENT OF ENVIRONMENTAL MANAGEMENT
OFFICE OF AIR QUALITY

PART 70 OPERATING PERMIT
CERTIFICATION

Source Name: Countrymark Cooperative, LLP
Source Address: 1200 Refinery Road, Mount Vernon, Indiana 47620
Mailing Address: 1200 Refinery Road, Mount Vernon, Indiana 47620
Part 70 Permit No.: T129-7882-00003

This certification shall be included when submitting monitoring, testing reports/results or other documents as required by this permit.

Please check what document is being certified:

☐ Annual Compliance Certification Letter

☐ Test Result (specify)

☐ Report (specify)

☐ Notification (specify)

☐ Affidavit (specify)

☐ Other (specify)

I certify that, based on information and belief formed after reasonable inquiry, the statements and information in the document are true, accurate, and complete.
Signature:
Printed Name:
Title/Position:
Phone:
Date:

INDIANA DEPARTMENT OF ENVIRONMENTAL MANAGEMENT
OFFICE OF AIR QUALITY

COMPLIANCE BRANCH
100 North Senate Avenue
MC 61-53 IGCN 1003
Indianapolis, Indiana 46204-2251
Phone: 317-233-0178
Fax: 317-233-6865

PART 70 OPERATING PERMIT
EMERGENCY OCCURRENCE REPORT

Source Name: Countrymark Cooperative, LLP
Source Address: 1200 Refinery Road, Mount Vernon, Indiana 47620
Mailing Address: 1200 Refinery Road, Mount Vernon, Indiana 47620
Part 70 Permit No.: T129-7882-00003

This form consists of 2 pages **Page 1 of 2**

☐ This is an emergency as defined in 326 IAC 2-7-1(12)

X The Permittee must notify the Office of Air Quality (OAQ), within four (**4**) business hours (1-800-451-6027 or 317-233-0178, ask for Compliance Section); and

X The Permittee must submit notice in writing or by facsimile within two (**2**) working days (Facsimile Number: 317-233-6865), and follow the other requirements of 326 IAC 2-7-16.

If any of the following are not applicable, mark N/A

Facility/Equipment/Operation:
Control Equipment:
Permit Condition or Operation Limitation in Permit:
Description of the Emergency:
Describe the cause of the Emergency:

If any of the following are not applicable, mark N/A

Date/Time Emergency started:
Date/Time Emergency was corrected:
Was the facility being properly operated at the time of the emergency? Y N
Type of Pollutants Emitted: TSP, PM-10, SO_2, VOC, NO_X, CO, Pb, other:
Estimated amount of pollutant(s) emitted during emergency:
Describe the steps taken to mitigate the problem:
Describe the corrective actions/response steps taken:
Describe the measures taken to minimize emissions:
If applicable, describe the reasons why continued operation of the facilities are necessary to prevent imminent injury to persons, severe damage to equipment, substantial loss of capital investment, or loss of product or raw materials of substantial economic value:

Form Completed by:_____

Title / Position:_____

Date:_____

Phone: _____

A certification is not required for this report.

INDIANA DEPARTMENT OF ENVIRONMENTAL MANAGEMENT
OFFICE OF AIR QUALITY
COMPLIANCE DATA SECTION

Part 70 Quarterly Report

Source Name: Countrymark Cooperative, LLP
Source Address: 1200 Refinery Road, Mount Vernon, Indiana 47620
Mailing Address: 1200 Refinery Road, Mount Vernon, Indiana 47620
Part 70 Permit No.: T129-7882-00003
Facility: Boilers B1, B2, B3, and B4
Parameter: No. 6 Fuel Oil Usage
Limit: The input of No. 6 fuel oil to the four boilers B1, B2, B3, and B4 based on a maximum fuel oil sulfur content of 0.8 percent shall be limited, to 3,214.92 thousand gallons per twelve (12) consecutive month period with compliance determined at the end of each month.

YEAR:

Month	Column 1	Column 2	Column 1 + Column 2
	This Month	Previous 11 Months	12 Month Total
Month 1			
Month 2			
Month 3			

☐ No deviation occurred in this quarter.

☐ Deviation/s occurred in this quarter.
Deviation has been reported on:

Submitted by: _____
Title / Position: _____
Signature: _____
Date: _____
Phone: _____

Attach a signed certification to complete this report.

INDIANA DEPARTMENT OF ENVIRONMENTAL MANAGEMENT
OFFICE OF AIR QUALITY
COMPLIANCE DATA SECTION

Part 70 Quarterly Report

Source Name: Countrymark Cooperative, LLP
Source Address: 1200 Refinery Road, Mount Vernon, Indiana 47620
Mailing Address: 1200 Refinery Road, Mount Vernon, Indiana 47620
Part 70 Permit No.: T129-7882-00003
Facility: B4
Parameter: No. 6 Fuel Oil Usage
Limit: The input of No. 6 fuel oil to the boiler B4 based on a maximum fuel oil sulfur content of 0.5 percent shall be limited, to 730,000 gallons per twelve (12) consecutive month period with compliance determined at the end of each month.

YEAR:

Month	Column 1	Column 2	Column 1 + Column 2
	This Month	Previous 11 Months	12 Month Total
Month 1			
Month 2			
Month 3			

☐ No deviation occurred in this quarter.

☐ Deviation/s occurred in this quarter.
Deviation has been reported on:

Submitted by: _____
Title / Position: _____
Signature: _____
Date: _____
Phone: _____

Attach a signed certification to complete this report.

INDIANA DEPARTMENT OF ENVIRONMENTAL MANAGEMENT
OFFICE OF AIR QUALITY
COMPLIANCE DATA SECTION

PART 70 OPERATING PERMIT
QUARTERLY DEVIATION AND COMPLIANCE MONITORING REPORT

Source Name: Countrymark Cooperative, LLP
Source Address: 1200 Refinery Road, Mount Vernon, Indiana 47620
Mailing Address: 1200 Refinery Road, Mount Vernon, Indiana 47620
Part 70 Permit No.: T129-7882-00003

Months: _____ to _____ Year: _____

This report shall be submitted quarterly based on a calendar year. Any deviation from the requirements, the date(s) of each deviation, the probable cause of the deviation, and the response steps taken must be reported. A deviation required to be reported pursuant to an applicable requirement that exists independent of the permit, shall be reported according to the schedule stated in the applicable requirement and does not need to be included in this report. Additional pages may be attached if necessary. If no deviations occurred, please specify in the box marked "No deviations occurred this reporting period".

☐ NO DEVIATIONS OCCURRED THIS REPORTING PERIOD.

☐ THE FOLLOWING DEVIATIONS OCCURRED THIS REPORTING PERIOD

Permit Requirement (specify permit condition #)	
Date of Deviation:	**Duration of Deviation:**
Number of Deviations:	
Probable Cause of Deviation:	
Response Steps Taken:	

Permit Requirement (specify permit condition #)	
Date of Deviation:	**Duration of Deviation:**
Number of Deviations:	
Probable Cause of Deviation:	
Response Steps Taken:	

Permit Requirement (specify permit condition #)	
Date of Deviation:	**Duration of Deviation:**
Number of Deviations:	
Probable Cause of Deviation:	
Response Steps Taken:	
Permit Requirement (specify permit condition #)	
Date of Deviation:	**Duration of Deviation:**
Number of Deviations:	
Probable Cause of Deviation:	
Response Steps Taken:	
Permit Requirement (specify permit condition #)	
Date of Deviation:	**Duration of Deviation:**
Number of Deviations:	
Probable Cause of Deviation:	
Response Steps Taken:	

Form Completed by:_____

Title / Position:_____

Date:_____

Phone: _____

Attach a signed certification to complete this report.

PART 70 OPERATING PERMIT
OFFICE OF AIR QUALITY

Countrymark Cooperative, LLP
1200 Refinery Road
Mount Vernon, Indiana 47620

Attachment A

Title 40: Protection of Environment

PART 61—NATIONAL EMISSION STANDARDS FOR HAZARDOUS AIR POLLUTANTS

Subpart FF—National Emission Standard for Benzene Waste Operations

MSM 129-26889-00003

SPM 129-26980-00003

Title 40: Protection of Environment

PART 61—NATIONAL EMISSION STANDARDS FOR HAZARDOUS AIR POLLUTANTS

Browse Previous

Subpart FF—National Emission Standard for Benzene Waste Operations

Source: 55 FR 8346, Mar. 7, 1990, unless otherwise noted.

§ 61.340 Applicability.

(a) The provisions of this subpart apply to owners and operators of chemical manufacturing plants, coke by-product recovery plants, and petroleum refineries.

(b) The provisions of this subpart apply to owners and operators of hazardous waste treatment, storage, and disposal facilities that treat, store, or dispose of hazardous waste generated by any facility listed in paragraph (a) of this section. The waste streams at hazardous waste treatment, storage, and disposal facilities subject to the provisions of this subpart are the benzene-containing hazardous waste from any facility listed in paragraph (a) of this section. A hazardous waste treatment, storage, and disposal facility is a facility that must obtain a hazardous waste management permit under subtitle C of the Solid Waste Disposal Act.

(c) At each facility identified in paragraph (a) or (b) of this section, the following waste is exempt from the requirements of this subpart:

(1) Waste in the form of gases or vapors that is emitted from process fluids:

(2) Waste that is contained in a segregated stormwater sewer system.

(d) At each facility identified in paragraph (a) or (b) of this section, any gaseous stream from a waste management unit, treatment process, or wastewater treatment system routed to a fuel gas system, as defined in §61.341, is exempt from this subpart. No testing, monitoring, recordkeeping, or reporting is required under this subpart for any gaseous stream from a waste management unit, treatment process, or wastewater treatment unit routed to a fuel gas system.

[55 FR 8346, Mar. 7, 1990, as amended at 55 FR 37231, Sept. 10, 1990; 58 FR 3095, Jan. 7, 1993; 67 FR 68531, Nov. 12, 2002]

§ 61.341 Definitions.

Benzene concentration means the fraction by weight of benzene in a waste as determined in accordance with the procedures specified in §61.355 of this subpart.

Car-seal means a seal that is placed on a device that is used to change the position of a valve (e.g., from opened to closed) in such a way that the position of the valve cannot be changed without breaking the seal.

Chemical manufacturing plant means any facility engaged in the production of chemicals by chemical, thermal, physical, or biological processes for use as a product, co-product, by-product, or intermediate including but not limited to industrial organic chemicals, organic pesticide products, pharmaceutical preparations, paint and allied products, fertilizers, and agricultural chemicals. Examples of chemical manufacturing plants include facilities at which process units are operated to produce one or more of the following chemicals: benzenesulfonic acid, benzene, chlorobenzene, cumene, cyclohexane, ethylene, ethylbenzene, hydroquinone, linear alklylbenzene, nitrobenzene, resorcinol, sulfolane, or styrene.

Closed-vent system means a system that is not open to the atmosphere and is composed of piping, ductwork, connections, and, if necessary, flow inducing devices that transport gas or vapor from an emission source to a control device.

Coke by-product recovery plant means any facility designed and operated for the separation and recovery of coal tar derivatives (by-products) evolved from coal during the coking process of a coke oven battery.

Container means any portable waste management unit in which a material is stored, transported, treated, or otherwise handled. Examples of containers are drums, barrels, tank trucks, barges, dumpsters, tank cars, dump trucks, and ships.

Control device means an enclosed combustion device, vapor recovery system, or flare.

Cover means a device or system which is placed on or over a waste placed in a waste management unit so that the entire waste surface area is enclosed and sealed to minimize air emissions. A cover may have openings necessary for operation, inspection, and maintenance of the waste management unit such as access hatches, sampling ports, and gauge wells provided that each opening is closed and sealed when not in use. Example of covers include a fixed roof installed on a tank, a lid installed on a container, and an air-supported enclosure installed over a waste management unit.

External floating roof means a pontoon-type or double-deck type cover with certain rim sealing mechanisms that rests on the liquid surface in a waste management unit with no fixed roof.

Facility means all process units and product tanks that generate waste within a stationary source, and all waste management units that are used for waste treatment, storage, or disposal within a stationary source.

Fixed roof means a cover that is mounted on a waste management unit in a stationary manner and that does not move with fluctuations in liquid level.

Floating roof means a cover with certain rim sealing mechanisms consisting of a double deck, pontoon single deck, internal floating cover or covered floating roof, which rests upon and is supported by the liquid being contained, and is equipped with a closure seal or seals to close the space between the roof edge and unit wall.

Flow indicator means a device which indicates whether gas flow is present in a line or vent system.

Fuel gas system means the offsite and onsite piping and control system that gathers gaseous streams generated by facility operations, may blend them with sources of gas, if available, and transports the blended gaseous fuel at suitable pressures for use as fuel in heaters, furnaces, boilers, incinerators, gas turbines, and other combustion devices located within or outside the facility. The fuel is piped directly to each individual combustion device, and the system typically operates at pressures over atmospheric.

Individual drain system means the system used to convey waste from a process unit, product storage tank, or waste management unit to a waste management unit. The term includes all process drains and common junction boxes, together with their associated sewer lines and other junction boxes, down to the receiving waste management unit.

Internal floating roof means a cover that rests or floats on the liquid surface inside a waste management unit that has a fixed roof.

Liquid-mounted seal means a foam or liquid-filled primary seal mounted in contact with the liquid between the waste management unit wall and the floating roof continuously around the circumference.

Loading means the introduction of waste into a waste management unit but not necessarily to complete capacity (also referred to as filling).

Maximum organic vapor pressure means the equilibrium partial pressure exerted by the waste at the temperature equal to the highest calendar-month average of the waste storage temperature for waste stored above or below the ambient temperature or at the local maximum monthly average temperature as reported by the National Weather Service for waste stored at the ambient temperature, as determined:

(1) In accordance with §60.17(c); or

(2) As obtained from standard reference texts; or

(3) In accordance with §60.17(a)(37); or

(4) Any other method approved by the Administrator.

No detectable emissions means less than 500 parts per million by volume (ppmv) above background levels, as measured by a detection instrument reading in accordance with the procedures specified in §61.355(h) of this subpart.

Oil-water separator means a waste management unit, generally a tank or surface impoundment, used to separate oil from water. An oil-water separator consists of not only the separation unit but also the forebay and other separator basins, skimmers, weirs, grit chambers, sludge hoppers, and bar screens that are located directly after the individual drain system and prior to additional treatment units such as an air flotation unit, clarifier, or biological treatment unit. Examples of an oil-water separator incude an API separator, parallel-plate interceptor, and corrugated-plate interceptor with the associated ancillary equipment.

Petroleum refinery means any facility engaged in producing gasoline, kerosene, distillate fuel oils, residual fuel oils, lubricants, or other products through the distillation of petroleum, or through the redistillation, cracking, or reforming of unfinished petroleum derivatives.

Petroleum means the crude oil removed from the earth and the oils derived from tar sands, shale, and coal.

Point of waste generation means the location where the waste stream exits the process unit component or storage tank prior to handling or treatment in an operation that is not an integral part of the production process, or in the case of waste management units that generate new wastes after treatment, the location where the waste stream exits the waste management unit component.

Process unit means equipment assembled and connected by pipes or ducts to produce intermediate or final products. A process unit can be operated independently if supplied with sufficient fuel or raw materials and sufficient product storage facilities.

Process unit turnaround means the shutting down of the operations of a process unit, the purging of the contents of the process unit, the maintenance or repair work, followed by restarting of the process.

Process unit turnaround waste means a waste that is generated as a result of a process unit turnaround.

Process wastewater means water which comes in contact with benzene during manufacturing or processing operations conducted within a process unit. Process wastewater is not organic wastes, process fluids, product tank drawdown, cooling tower blowdown, steam trap condensate, or landfill leachate.

Process wastewater stream means a waste stream that contains only process wastewater.

Product tank means a stationary unit that is designed to contain an accumulation of materials that are fed to or produced by a process unit, and is constructed primarily of non-earthen materials (e.g., wood, concrete, steel, plastic) which provide structural support.

Product tank drawdown means any material or mixture of materials discharged from a product tank for the purpose of removing water or other contaminants from the product tank.

Safety device means a closure device such as a pressure relief valve, frangible disc, fusible plug, or any other type of device which functions exclusively to prevent physical damage or permanent deformation to a unit or its air emission control equipment by venting gases or vapors directly to the atmosphere during unsafe conditions resulting from an unplanned, accidental, or emergency event. For the purpose of this subpart, a safety device is not used for routine venting of gases or vapors from the vapor headspace underneath a cover such as during filling of the unit or to adjust the pressure in this vapor headspace in response to normal daily diurnal ambient temperature fluctuations. A safety device is designed to remain in a closed position during normal operations and open only when the internal pressure, or another relevant parameter, exceeds the device threshold setting applicable to the air emission control equipment as determined by the owner or operator based on manufacturer recommendations, applicable regulations, fire protection and prevention codes, standard engineering codes and practices, or other requirements for the safe handling of flammable, ignitable, explosive, reactive, or hazardous materials.

Segregated stormwater sewer system means a drain and collection system designed and operated for the sole purpose of collecting rainfall runoff at a facility, and which is segregated from all other individual drain systems.

Sewer line means a lateral, trunk line, branch line, or other enclosed conduit used to convey waste to a downstream waste management unit.

Slop oil means the floating oil and solids that accumulate on the surface of an oil-water separator.

Sour water stream means a stream that:

(1) Contains ammonia or sulfur compounds (usually hydrogen sulfide) at concentrations of 10 ppm by weight or more;

(2) Is generated from separation of water from a feed stock, intermediate, or product that contained ammonia or sulfur compounds; and

(3) Requires treatment to remove the ammonia or sulfur compounds.

Sour water stripper means a unit that:

(1) Is designed and operated to remove ammonia or sulfur compounds (usually hydrogen sulfide) from sour water streams;

(2) Has the sour water streams transferred to the stripper through hard piping or other enclosed system; and

(3) Is operated in such a manner that the offgases are sent to a sulfur recovery unit, processing unit, incinerator, flare, or other combustion device.

Surface impoundment means a waste management unit which is a natural topographic depression, man-made excavation, or diked area formed primarily of earthen materials (although it may be lined with man-made materials), which is designed to hold an accumulation of liquid wastes or waste containing free liquids, and which is not an injection well. Examples of surface impoundments are holding, storage, settling, and aeration pits, ponds, and lagoons.

Tank means a stationary waste management unit that is designed to contain an accumulation of waste and is constructed primarily of nonearthen materials (e.g., wood, concrete, steel, plastic) which provide structural support.

Treatment process means a stream stripping unit, thin-film evaporation unit, waste incinerator, or any other process used to comply with §61.348 of this subpart.

Vapor-mounted seal means a foam-filled primary seal mounted continuously around the perimeter of a waste management unit so there is an annular vapor space underneath the seal. The annular vapor space is bounded by the bottom of the primary seal, the unit wall, the liquid surface, and the floating roof.

Waste means any material resulting from industrial, commercial, mining or agricultural operations, or from community activities that is discarded or is being accumulated, stored, or physically, chemically, thermally, or biologically treated prior to being discarded, recycled, or discharged.

Waste management unit means a piece of equipment, structure, or transport mechanism used in handling, storage, treatment, or disposal of waste. Examples of a waste management unit include a tank, surface impoundment, container, oil-water separator, individual drain system, steam stripping unit, thin-film evaporation unit, waste incinerator, and landfill.

Waste stream means the waste generated by a particular process unit, product tank, or waste management unit. The characteristics of the waste stream (e.g., flow rate, benzene concentration, water content) are determined at the point of waste generation. Examples of a waste stream include process wastewater, product tank drawdown, sludge and slop oil removed from waste management units, and landfill leachate.

Wastewater treatment system means any component, piece of equipment, or installation that receives, manages, or treats process wastewater, product tank drawdown, or landfill leachate prior to direct or indirect discharge in accordance with the National Pollutant Discharge Elimination System permit regulations under 40 CFR part 122. These systems typically include individual drain systems, oil-water separators, air flotation units, equalization tanks, and biological treatment units.

Water seal controls means a seal pot, p-leg trap, or other type of trap filled with water (e.g., flooded sewers that maintain water levels adequate to prevent air flow through the system) that creates a water barrier between the sewer line and the atmosphere. The water level of the seal must be maintained in the vertical leg of a drain in order to be considered a water seal.

[55 FR 8346, Mar. 7, 1990; 55 FR 12444, Apr. 3, 1990, as amended at 58 FR 3095, Jan. 7, 1993; 67 FR 68531, Nov. 12, 2002]

§ 61.342 Standards: General.

(a) An owner or operator of a facility at which the total annual benzene quantity from facility waste is less than 10 megagrams per year (Mg/yr) (11 ton/yr) shall be exempt from the requirements of paragraphs (b) and (c) of this section. The total annual benzene quantity from facility waste is the sum of the annual benzene quantity for each waste stream at the facility that has a flow-weighted annual average water content greater than 10 percent or that is mixed with water, or other wastes, at any time and the mixture has an annual average water content greater than 10 percent. The benzene quantity in a waste stream is to be counted only once without multiple counting if other waste streams are mixed with or generated from the original waste stream. Other specific requirements for calculating the total annual benzene waste quantity are as follows:

(1) Wastes that are exempted from control under §§61.342(c)(2) and 61.342(c)(3) are included in the calculation of the total annual benzene quantity if they have an annual average water content greater than 10 percent, or if they are mixed with water or other wastes at any time and the mixture has an annual average water content greater than 10 percent.

(2) The benzene in a material subject to this subpart that is sold is included in the calculation of the total annual benzene quantity if the material has an annual average water content greater than 10 percent.

(3) Benzene in wastes generated by remediation activities conducted at the facility, such as the excavation of contaminated soil, pumping and treatment of groundwater, and the recovery of product from soil or groundwater, are not included in the calculation of total annual benzene quantity for that facility. If the facility's total annual benzene quantity is 10 Mg/yr (11 ton/yr) or more, wastes generated by remediation activities are subject to the requirements of paragraphs (c) through (h) of this section. If the facility is managing remediation waste generated offsite, the benzene in this waste shall be included in the calculation

of total annual benzene quantity in facility waste, if the waste streams have an annual average water content greater than 10 percent, or if they are mixed with water or other wastes at any time and the mixture has an annual average water content greater than 10 percent.

(4) The total annual benzene quantity is determined based upon the quantity of benzene in the waste before any waste treatment occurs to remove the benzene except as specified in §61.355(c)(1)(i) (A) through (C).

(b) Each owner or operator of a facility at which the total annual benzene quantity from facility waste is equal to or greater than 10 Mg/yr (11 ton/yr) as determined in paragraph (a) of this section shall be in compliance with the requirements of paragraphs (c) through (h) of this section no later than 90 days following the effective date, unless a waiver of compliance has been obtained under §61.11, or by the initial startup for a new source with an initial startup after the effective date.

(1) The owner or operator of an existing source unable to comply with the rule within the required time may request a waiver of compliance under §61.10.

(2) As part of the waiver application, the owner or operator shall submit to the Administrator a plan under §61.10(b)(3) that is an enforceable commitment to obtain environmental benefits to mitigate the benzene emissions that result from extending the compliance date. The plan shall include the following information:

(i) A description of the method of compliance, including the control approach, schedule for installing controls, and quantity of the benzene emissions that result from extending the compliance date;

(ii) If the control approach involves a compliance strategy designed to obtain integrated compliance with multiple regulatory requirements, a description of the other regulations involved and their effective dates; and

(iii) A description of the actions to be taken at the facility to obtain mitigating environmental benefits, including how the benefits will be obtained, the schedule for these actions, and an estimate of the quantifiable benefits that directly result from these actions.

(c) Each owner or operator of a facility at which the total annual benzene quantity from facility waste is equal to or greater than 10 Mg/yr (11 ton/yr) as determined in paragraph (a) of this section shall manage and treat the facility waste as follows:

(1) For each waste stream that contains benzene, including (but not limited to) organic waste streams that contain less than 10 percent water and aqueous waste streams, even if the wastes are not discharged to an individual drain system, the owner or operator shall:

(i) Remove or destroy the benzene contained in the waste using a treatment process or wastewater treatment system that complies with the standards specified in §61.348 of this subpart.

(ii) Comply with the standards specified in §§61.343 through 61.347 of this subpart for each waste management unit that receives or manages the waste stream prior to and during treatment of the waste stream in accordance with paragraph (c)(1)(i) of this section.

(iii) Each waste management unit used to manage or treat waste streams that will be recycled to a process shall comply with the standards specified in §§61.343 through 61.347. Once the waste stream is recycled to a process, including to a tank used for the storage of production process feed, product, or product intermediates, unless this tank is used primarily for the storage of wastes, the material is no longer subject to paragraph (c) of this section.

(2) A waste stream is exempt from paragraph (c)(1) of this section provided that the owner or operator demonstrates initially and, thereafter, at least once per year that the flow-weighted annual average benzene concentration for the waste stream is less than 10 ppmw as determined by the procedures specified in §61.355(c)(2) or §61.355(c)(3).

(3) A waste stream is exempt from paragraph (c)(1) of this section provided that the owner or operator demonstrates initially and, thereafter, at least once per year that the conditions specified in either paragraph (c)(3)(i) or (c)(3)(ii) of this section are met.

(i) The waste stream is process wastewater that has a flow rate less than 0.02 liters per minute (0.005 gallons per minute) or an annual wastewater quantity of less than 10 Mg/yr (11 ton/yr); or

(ii) All of the following conditions are met:

(A) The owner or operator does not choose to exempt process wastewater under paragraph (c)(3)(i) of this section,

(B) The total annual benzene quantity in all waste streams chosen for exemption in paragraph (c)(3)(ii) of this section does not exceed 2.0 Mg/yr (2.2 ton/yr) as determined in the procedures in §61.355(j), and

(C) The total annual benzene quantity in a waste stream chosen for exemption, including process unit turnaround waste, is determined for the year in which the waste is generated.

(d) As an alternative to the requirements specified in paragraphs (c) and (e) of this section, an owner or operator of a facility at which the total annual benzene quantity from facility waste is equal to or greater than 10 Mg/yr (11 ton/yr) as determined in paragraph (a) of this section may elect to manage and treat the facility waste as follows:

(1) The owner or operator shall manage and treat facility waste other than process wastewater in accordance with the requirements of paragraph (c)(1) of this section.

(2) The owner or operator shall manage and treat process wastewater in accordance with the following requirements:

(i) Process wastewater shall be treated to achieve a total annual benzene quantity from facility process wastewater less than 1 Mg/yr (1.1 ton/yr). Total annual benzene from facility process wastewater shall be determined by adding together the annual benzene quantity at the point of waste generation for each untreated process wastewater stream plus the annual benzene quantity exiting the treatment process for each process wastewater stream treated in accordance with the requirements of paragraph (c)(1)(i) of this section.

(ii) Each treated process wastewater stream identified in paragraph (d)(2)(i) of this section shall be managed and treated in accordance with paragraph (c)(1) of this section.

(iii) Each untreated process wastewater stream identified in paragraph (d)(2)(i) of this section is exempt from the requirements of paragraph (c)(1) of this section.

(e) As an alternative to the requirements specified in paragraphs (c) and (d) of this section, an owner or operator of a facility at which the total annual benzene quantity from facility waste is equal to or greater than 10 Mg/yr (11 ton/yr) as determined in paragraph (a) of this section may elect to manage and treat the facility waste as follows:

(1) The owner or operator shall manage and treat facility waste with a flow-weighted annual average water content of less than 10 percent in accordance with the requirements of paragraph (c)(1) of this section; and

(2) The owner or operator shall manage and treat facility waste (including remediation and process unit turnaround waste) with a flow-weighted annual average water content of 10 percent or greater, on a volume basis as total water, and each waste stream that is mixed with water or wastes at any time such that the resulting mixture has an annual water content greater than 10 percent, in accordance with the following:

(i) The benzene quantity for the wastes described in paragraph (e)(2) of this section must be equal to or less than 6.0 Mg/yr (6.6 ton/yr), as determined in §61.355(k). Wastes as described in paragraph (e)(2) of this

section that are transferred offsite shall be included in the determination of benzene quantity as provided in §61.355(k). The provisions of paragraph (f) of this section shall not apply to any owner or operator who elects to comply with the provisions of paragraph (e) of this section.

(ii) The determination of benzene quantity for each waste stream defined in paragraph (e)(2) of this section shall be made in accordance with §61.355(k).

(f) Rather than treating the waste onsite, an owner or operator may elect to comply with paragraph (c)(1)(i) of this section by transferring the waste offsite to another facility where the waste is treated in accordance with the requirements of paragraph (c)(1)(i) of this section. The owner or operator transferring the waste shall:

(1) Comply with the standards specified in §§61.343 through 61.347 of this subpart for each waste management unit that receives or manages the waste prior to shipment of the waste offsite.

(2) Include with each offsite waste shipment a notice stating that the waste contains benzene which is required to be managed and treated in accordance with the provisions of this subpart.

(g) Compliance with this subpart will be determined by review of facility records and results from tests and inspections using methods and procedures specified in §61.355 of this subpart.

(h) Permission to use an alternative means of compliance to meet the requirements of §§61.342 through 61.352 of this subpart may be granted by the Administrator as provided in §61.353 of this subpart.

[55 FR 8346, Mar. 7, 1990, as amended at 58 FR 3095, Jan. 7, 1993; 65 FR 62159, 62160, Oct. 17, 2000]

§ 61.343 Standards: Tanks.

(a) Except as provided in paragraph (b) of this section and in §61.351, the owner or operator must meet the standards in paragraph (a)(1) or (2) of this section for each tank in which the waste stream is placed in accordance with §61.342 (c)(1)(ii). The standards in this section apply to the treatment and storage of the waste stream in a tank, including dewatering.

(1) The owner or operator shall install, operate, and maintain a fixed-roof and closed-vent system that routes all organic vapors vented from the tank to a control device.

(i) The fixed-roof shall meet the following requirements:

(A) The cover and all openings (e.g., access hatches, sampling ports, and gauge wells) shall be designed to operate with no detectable emissions as indicated by an instrument reading of less than 500 ppmv above background, as determined initially and thereafter at least once per year by the methods specified in §61.355(h) of this subpart.

(B) Each opening shall be maintained in a closed, sealed position (e.g., covered by a lid that is gasketed and latched) at all times that waste is in the tank except when it is necessary to use the opening for waste sampling or removal, or for equipment inspection, maintenance, or repair.

(C) If the cover and closed-vent system operate such that the tank is maintained at a pressure less than atmospheric pressure, then paragraph (a)(1)(i)(B) of this section does not apply to any opening that meets all of thefollowing conditions:

(*1*) The purpose of the opening is to provide dilution air to reduce the explosion hazard;

(*2*) The opening is designed to operate with no detectable emissions as indicated by an instrument reading of less than 500 ppmv above background, as determined initially and thereafter at least once per year by the methods specified in §61.355(h); and

(*3*) The pressure is monitored continuously to ensure that the pressure in the tank remains below atmospheric pressure.

(ii) The closed-vent system and control device shall be designed and operated in accordance with the requirements of §61.349 of this subpart.

(2) The owner or operator must install, operate, and maintain an enclosure and closed-vent system that routes all organic vapors vented from the tank, located inside the enclosure, to a control device in accordance with the requirements specified in paragraph (e) of this section.

(b) For a tank that meets all the conditions specified in paragraph (b)(1) of this section, the owner or operator may elect to comply with paragraph (b)(2) of this section as an alternative to the requirements specified in paragraph (a)(1) of this section.

(1) The waste managed in the tank complying with paragraph (b)(2) of this section shall meet all of the following conditions:

(i) Each waste stream managed in the tank must have a flow-weighted annual average water content less than or equal to 10 percent water, on a volume basis as total water.

(ii) The waste managed in the tank either:

(A) Has a maximum organic vapor pressure less than 5.2 kilopascals (kPa) (0.75 pounds per square inch (psi));

(B) Has a maximum organic vapor pressure less than 27.6 kPa (4.0 psi) and is managed in a tank having design capacity less than 151 m^3 (40,000 gal); or

(C) Has a maximum organic vapor pressure less than 76.6 kPa (11.1 psi) and is managed in a tank having a design capacity less than 75 m^3 (20,000 gal).

(2) The owner or operator shall install, operate, and maintain a fixed roof as specified in paragraph (a)(1)(i).

(3) For each tank complying with paragraph (b) of this section, one or more devices which vent directly to the atmosphere may be used on the tank provided each device remains in a closed, sealed position during normal operations except when the device needs to open to prevent physical damage or permanent deformation of the tank or cover resulting from filling or emptying the tank, diurnal temperature changes, atmospheric pressure changes or malfunction of the unit in accordance with good engineering and safety practices for handling flammable, explosive, or other hazardous materials.

(c) Each fixed-roof, seal, access door, and all other openings shall be checked by visual inspection initially and quarterly thereafter to ensure that no cracks or gaps occur and that access doors and other openings are closed and gasketed properly.

(d) Except as provided in §61.350 of this subpart, when a broken seal or gasket or other problem is identified, or when detectable emissions are measured, first efforts at repair shall be made as soon as practicable, but not later than 45 calendar days after identification.

(e) Each owner or operator who controls air pollutant emissions by using an enclosure vented through a closed-vent system to a control device must meet the requirements specified in paragraphs (e)(1) through (4) of this section.

(1) The tank must be located inside a total enclosure. The enclosure must be designed and operated in accordance with the criteria for a permanent total enclosure as specified in “Procedure T—Criteria for and Verification of a Permanent or Temporary Total Enclosure” in 40 CFR 52.741, appendix B. The enclosure may have permanent or temporary openings to allow worker access; passage of material into or out of the enclosure by conveyor, vehicles, or other mechanical means; entry of permanent mechanical or electrical

equipment; or direct airflow into the enclosure. The owner or operator must perform the verification procedure for the enclosure as specified in section 5.0 of Procedure T initially when the enclosure is first installed and, thereafter, annually. A facility that has conducted an initial compliance demonstration and that performs annual compliance demonstrations in accordance with the requirements for Tank Level 2 control requirements 40 CFR 264.1084(i) or 40 CFR 265(i) is not required to make repeat demonstrations of initial and continuous compliance for the purposes of this subpart.

(2) The enclosure must be vented through a closed-vent system to a control device that is designed and operated in accordance with the standards for control devices specified in §61.349.

(3) Safety devices, as defined in this subpart, may be installed and operated as necessary on any enclosure, closed-vent system, or control device used to comply with the requirements of paragraphs (e)(1) and (2) of this section.

(4) The closed-vent system must be designed and operated in accordance with the requirements of §61.349.

[55 FR 8346, Mar. 7, 1990, as amended at 55 FR 18331, May 2, 1990; 58 FR 3096, Jan. 7, 1993; 67 FR 68532, Nov. 12, 2002; 68 FR 6082, Feb. 6, 2003; 68 FR 67935, Dec. 4, 2003]

§ 61.344 Standards: Surface impoundments.

(a) The owner or operator shall meet the following standards for each surface impoundment in which waste is placed in accordance with §61.342(c)(1)(ii) of this subpart:

(1) The owner or operator shall install, operate, and maintain on each surface impoundment a cover (e.g., air-supported structure or rigid cover) and closed-vent system that routes all organic vapors vented from the surface impoundment to a control device.

(i) The cover shall meet the following requirements:

(A) The cover and all openings (e.g., access hatches, sampling ports, and gauge wells) shall be designed to operate with no detectable emissions as indicated by an instrument reading of less than 500 ppmv above background, initially and thereafter at least once per year by the methods specified in §61.355(h) of this subpart.

(B) Each opening shall be maintained in a closed, sealed position (e.g., covered by a lid that is gasketed and latched) at all times that waste is in the surface impoundment except when it is necessary to use the opening for waste sampling or removal, or for equipment inspection, maintenance, or repair.

(C) If the cover and closed-vent system operate such that the enclosure of the surface impoundment is maintained at a pressure less than atmospheric pressure, then paragraph (a)(1)(i)(B) of this section does not apply to any opening that meets all of the following conditions:

(*1*) The purpose of the opening is to provide dilution air to reduce the explosion hazard;

(*2*) The opening is designed to operate with no detectable emissions as indicated by an instrument reading of less than 500 ppmv above background, as determined initially and thereafter at least once per year by the methods specified in §61.355(h) of this subpart; and

(*3*) The pressure is monitored continuously to ensure that the pressure in the enclosure of the surface impoundment remains below atmospheric pressure.

(D) The cover shall be used at all times that waste is placed in the surface impoundment except during removal of treatment residuals in accordance with 40 CFR 268.4 or closure of the surface impoundment in

accordance with 40 CFR 264.228. (Note: the treatment residuals generated by these activities may be subject to the requirements of this part.)

(ii) The closed-vent system and control device shall be designed and operated in accordance with §61.349 of this subpart.

(b) Each cover seal, access hatch, and all other openings shall be checked by visual inspection initially and quarterly thereafter to ensure that no cracks or gaps occur and that access hatches and other openings are closed and gasketed properly.

(c) Except as provided in §61.350 of this subpart, when a broken seal or gasket or other problem is identified, or when detectable emissions are measured, first efforts at repair shall be made as soon as practicable, but not later than 15 calendar days after identification.

[55 FR 8346, Mar. 7, 1990, as amended at 58 FR 3097, Jan. 7, 1993]

§ 61.345 Standards: Containers.

(a) The owner or operator shall meet the following standards for each container in which waste is placed in accordance with §61.342(c)(1)(ii) of this subpart:

(1) The owner or operator shall install, operate, and maintain a cover on each container used to handle, transfer, or store waste in accordance with the following requirements:

(i) The cover and all openings (e.g., bungs, hatches, and sampling ports) shall be designed to operate with no detectable emissions as indicated by an instrument reading of less than 500 ppmv above background, initially and thereafter at least once per year by the methods specified in §61.355(h) of this subpart.

(ii) Except as provided in paragraph (a)(4) of this section, each opening shall be maintained in a closed, sealed position (e.g., covered by a lid that is gasketed and latched) at all times that waste is in the container except when it is necessary to use the opening for waste loading, removal, inspection, or sampling.

(2) When a waste is transferred into a container by pumping, the owner or operator shall perform the transfer using a submerged fill pipe. The submerged fill pipe outlet shall extend to within two fill pipe diameters of the bottom of the container while the container is being loaded. During loading of the waste, the cover shall remain in place and all openings shall be maintained in a closed, sealed position except for those openings required for the submerged fill pipe, those openings required for venting of the container to prevent physical damage or permanent deformation of the container or cover, and any openings complying with paragraph (a)(4) of this section.

(3) Treatment of a waste in a container, including aeration, thermal or other treatment, must be performed by the owner or operator in a manner such that while the waste is being treated the container meets the standards specified in paragraphs (a)(3)(i) through (iii) of this section, except for covers and closed-vent systems that meet the requirements in paragraph (a)(4) of this section.

(i) The owner or operator must either:

(A) Vent the container inside a total enclosure which is exhausted through a closed-vent system to a control device in accordance with the requirements of paragraphs (a)(3)(ii)(A) and (B) of this section; or

(B) Vent the covered or closed container directly through a closed-vent system to a control device in accordance with the requirements of paragraphs (a)(3)(ii)(B) and (C) of this section.

(ii) The owner or operator must meet the following requirements, as applicable to the type of air emission control equipment selected by the owner or operator:

(A) The total enclosure must be designed and operated in accordance with the criteria for a permanent total enclosure as specified in section 5 of the "Procedure T—Criteria for and Verification of a Permanent or Temporary Total Enclosure" in 40 CFR 52.741, appendix B. The enclosure may have permanent or temporary openings to allow worker access; passage of containers through the enclosure by conveyor or other mechanical means; entry of permanent mechanical or electrical equipment; or direct airflow into the enclosure. The owner or operator must perform the verification procedure for the enclosure as specified in section 5.0 of "Procedure T—Criteria for and Verification of a Permanent or Temporary Total Enclosure" initially when the enclosure is first installed and, thereafter, annually. A facility that has conducted an initial compliance demonstration and that performs annual compliance demonstrations in accordance with the Container Level 3 control requirements in 40 CFR 264.1086(e)(2)(i) or 40 CFR 265.1086(e)(2)(i) is not required to make repeat demonstrations of initial and continuous compliance for the purposes of this subpart.

(B) The closed-vent system and control device must be designed and operated in accordance with the requirements of §61.349.

(C) For a container cover, the cover and all openings (*e.g.,* doors, hatches) must be designed to operate with no detectable emissions as indicated by an instrument reading of less than 500 ppmv above background, initially and thereafter at least once per year by the methods specified in §61.355(h).

(iii) Safety devices, as defined in this subpart, may be installed and operated as necessary on any container, enclosure, closed-vent system, or control device used to comply with the requirements of paragraph (a)(3)(i) of this section.

(4) If the cover and closed-vent system operate such that the container is maintained at a pressure less than atmospheric pressure, the owner or operator may operate the system with an opening that is not sealed and kept closed at all times if the following conditions are met:

(i) The purpose of the opening is to provide dilution air to reduce the explosion hazard;

(ii) The opening is designed to operate with no detectable emissions as indicated by an instrument reading of less than 500 ppmv above background, as determined initially and thereafter at least once per year by methods specified in §61.355(h); and

(iii) The pressure is monitored continuously to ensure that the pressure in the container remains below atmospheric pressure.

(b) Each cover and all openings shall be visually inspected initially and quarterly thereafter to ensure that they are closed and gasketed properly.

(c) Except as provided in §61.350 of this subpart, when a broken seal or gasket or other problem is identified, first efforts at repair shall be made as soon as practicable, but not later than 15 calendar days after identification.

[55 FR 8346, Mar. 7, 1990, as amended at 58 FR 3097, Jan. 7, 1993; 67 FR 68532, Nov. 12, 2002; 68 FR 67936, Dec. 4, 2003]

§ 61.346 Standards: Individual drain systems.

(a) Except as provided in paragraph (b) of this section, the owner or operator shall meet the following standards for each individual drain system in which waste is placed in accordance with §61.342(c)(1)(ii) of this subpart:

(1) The owner or operator shall install, operate, and maintain on each drain system opening a cover and closed-vent system that routes all organic vapors vented from the drain system to a control device.

(i) The cover shall meet the following requirements:

(A) The cover and all openings (e.g., access hatches, sampling ports) shall be designed to operate with no detactable emissions as indicated by an instrument reading of less than 500 ppmv above background, initially and thereafter at least once per year by the methods specified in §61.355(h) of this subpart.

(B) Each opening shall be maintained in a closed, sealed position (e.g., covered by a lid that is gasketed and latched) at all times that waste is in the drain system except when it is necessary to use the opening for waste sampling or removal, or for equipment inspection, maintenance, or repair.

(C) If the cover and closed-vent system operate such that the individual drain system is maintained at a pressure less than atmospheric pressure, then paragraph (a)(1)(i)(B) of this section does not apply to any opening that meets all of the following conditions:

(*1*) The purpose of the opening is to provide dilution air to reduce the explosion hazard;

(*2*) The opening is designed to operate with no detectable emissions as indicated by an instrument reading of less than 500 ppmv above background, as determined initially and thereafter at least once per year by the methods specified in §61.355(h); and

(*3*) The pressure is monitored continuously to ensure that the pressure in the individual drain system remains below atmospheric pressure.

(ii) The closed-vent system and control device shall be designed and operated in accordance with §61.349 of this subpart.

(2) Each cover seal, access hatch, and all other openings shall be checked by visual inspection initially and quarterly thereafter to ensure that no cracks or gaps occur and that access hatches and other openings are closed and gasketed properly.

(3) Except as provided in §61.350 of this subpart, when a broken seal or gasket or other problem is identified, or when detectable emissions are measured, first efforts at repair shall be made as soon as practicable, but not later than 15 calendar days after identification.

(b) As an alternative to complying with paragraph (a) of this section, an owner or operator may elect to comply with the following requirements:

(1) Each drain shall be equipped with water seal controls or a tightly sealed cap or plug.

(2) Each junction box shall be equipped with a cover and may have a vent pipe. The vent pipe shall be at least 90 cm (3 ft) in length and shall not exceed 10.2 cm (4 in) in diameter.

(i) Junction box covers shall have a tight seal around the edge and shall be kept in place at all times, except during inspection and maintenance.

(ii) One of the following methods shall be used to control emissions from the junction box vent pipe to the atmosphere:

(A) Equip the junction box with a system to prevent the flow of organic vapors from the junction box vent pipe to the atmosphere during normal operation. An example of such a system includes use of water seal controls on the junction box. A flow indicator shall be installed, operated, and maintained on each junction box vent pipe to ensure that organic vapors are not vented from the junction box to the atmosphere during normal operation.

(B) Connect the junction box vent pipe to a closed-vent system and control device in accordance with §61.349 of this subpart.

(3) Each sewer line shall not be open to the atmosphere and shall be covered or enclosed in a manner so as to have no visual gaps or cracks in joints, seals, or other emission interfaces.

(4) Equipment installed in accordance with paragraphs (b)(1), (b)(2), or (b)(3) of this section shall be inspected as follows:

(i) Each drain using water seal controls shall be checked by visual or physical inspection initially and thereafter quarterly for indications of low water levels or other conditions that would reduce the effectiveness of water seal controls.

(ii) Each drain using a tightly sealed cap or plug shall be visually inspected initially and thereafter quarterly to ensure caps or plugs are in place and properly installed.

(iii) Each junction box shall be visually inspected initially and thereafter quarterly to ensure that the cover is in place and to ensure that the cover has a tight seal around the edge.

(iv) The unburied portion of each sewer line shall be visually inspected initially and thereafter quarterly for indication of cracks, gaps, or other problems that could result in benzene emissions.

(5) Except as provided in §61.350 of this subpart, when a broken seal, gap, crack or other problem is identified, first efforts at repair shall be made as soon as practicable, but not later than 15 calendar days after identification.

[55 FR 8346, Mar. 7, 1990, as amended at 55 FR 37231, Sept. 10, 1990; 58 FR 3097, Jan. 7, 1993]

§ 61.347 Standards: Oil-water separators.

(a) Except as provided in §61.352 of this subpart, the owner or operator shall meet the following standards for each oil-water separator in which waste is placed in accordance with §61.342(c)(1)(ii) of this subpart:

(1) The owner or operator shall install, operate, and maintain a fixed-roof and closed-vent system that routes all organic vapors vented from the oil-water separator to a control device.

(i) The fixed-roof shall meet the following requirements:

(A) The cover and all openings (e.g., access hatches, sampling ports, and gauge wells) shall be designed to operate with no detectable emissions as indicated by an instrument reading of less than 500 ppmv above background, as determined initially and thereafter at least once per year by the methods specified in §61.355(h) of this subpart.

(B) Each opening shall be maintained in a closed, sealed position (e.g., covered by a lid that is gasketed and latched) at all times that waste is in the oil-water separator except when it is necessary to use the opening for waste sampling or removal, or for equipment inspection, maintenance, or repair.

(C) If the cover and closed-vent system operate such that the oil-water separator is maintained at a pressure less than atmospheric pressure, then paragraph (a)(1)(i)(B) of this section does not apply to any opening that meets all of the following conditions:

(*1*) The purpose of the opening is to provide dilution air to reduce the explosion hazard;

(*2*) The opening is designed to operate with no detectable emissions as indicated by an instrument reading of less than 500 ppmv above background, as determined initially and thereafter at least once per year by the methods specified in §61.355(h); and

(*3*) The pressure is monitored continuously to ensure that the pressure in the oil-water separator remains below atmospheric pressure.

(ii) The closed-vent system and control device shall be designed and operated in accordance with the requirements of §61.349 of this subpart.

(b) Each cover seal, access hatch, and all other openings shall be checked by visual inspection initially and quarterly thereafter to ensure that no cracks or gaps occur between the cover and oil-water separator wall and that access hatches and other openings are closed and gasketed properly.

(c) Except as provided in §61.350 of this subpart, when a broken seal or gasket or other problem is identified, or when detectable emissions are measured, first efforts at repair shall be made as soon as practicable, but not later than 15 calendar days after identification.

[55 FR 8346, Mar. 7, 1990, as amended at 58 FR 3098, Jan. 7, 1993]

§ 61.348 Standards: Treatment processes.

(a) Except as provided in paragraph (a)(5) of this section, the owner or operator shall treat the waste stream in accordance with the following requirements:

(1) The owner or operator shall design, install, operate, and maintain a treatment process that either:

(i) Removes benzene from the waste stream to a level less than 10 parts per million by weight (ppmw) on a flow-weighted annual average basis,

(ii) Removes benzene from the waste stream by 99 percent or more on a mass basis, or

(iii) Destroys benzene in the waste stream by incinerating the waste in a combustion unit that achieves a destruction efficiency of 99 percent or greater for benzene.

(2) Each treatment process complying with paragraphs (a)(1)(i) or (a)(1)(ii) of this section shall be designed and operated in accordance with the appropriate waste management unit standards specified in §§61.343 through 61.347 of this subpart. For example, if a treatment process is a tank, then the owner or operator shall comply with §61.343 of this subpart.

(3) For the purpose of complying with the requirements specified in paragraph (a)(1)(i) of this section, the intentional or unintentional reduction in the benzene concentration of a waste stream by dilution of the waste stream with other wastes or materials is not allowed.

(4) An owner or operator may aggregate or mix together individual waste streams to create a combined waste stream for the purpose of facilitating treatment of waste to comply with the requirements of paragraph (a)(1) of this section except as provided in paragraph (a)(5) of this section.

(5) If an owner or operator aggregates or mixes any combination of process wastewater, product tank drawdown, or landfill leachate subject to §61.342(c)(1) of this subpart together with other waste streams to create a combined waste stream for the purpose of facilitating management or treatment of waste in a wastewater treatment system, then the wastewater treatment system shall be operated in accordance with paragraph (b) of this section. These provisions apply to above-ground wastewater treatment systems as well as those that are at or below ground level.

(b) Except for facilities complying with §61.342(e), the owner or operator that aggregates or mixes individual waste streams as defined in paragraph (a)(5) of this section for management and treatment in a wastewater treatment system shall comply with the following requirements:

(1) The owner or operator shall design and operate each waste management unit that comprises the wastewater treatment system in accordance with the appropriate standards specified in §§61.343 through 61.347 of this subpart.

(2) The provisions of paragraph (b)(1) of this section do not apply to any waste management unit that the owner or operator demonstrates to meet the following conditions initially and, thereafter, at least once per year:

(i) The benzene content of each waste stream entering the waste management unit is less than 10 ppmw on a flow-weighted annual average basis as determined by the procedures specified in §61.355(c) of this subpart; and

(ii) The total annual benzene quantity contained in all waste streams managed or treated in exempt waste management units comprising the facility wastewater treatment systems is less than 1 Mg/yr (1.1 ton/yr). For this determination, total annual benzene quantity shall be calculated as follows:

(A) The total annual benzene quantity shall be calculated as the sum of the individual benzene quantities determined at each location where a waste stream first enters an exempt waste management unit. The benzene quantity discharged from an exempt waste management unit shall not be included in this calculation.

(B) The annual benzene quantity in a waste stream managed or treated in an enhanced biodegradation unit shall not be included in the calculation of the total annual benzene quantity, if the enhanced biodegradation unit is the first exempt unit in which the waste is managed or treated. A unit shall be considered enhanced biodegradation if it is a suspended-growth process that generates biomass, uses recycled biomass, and periodically removes biomass from the process. An enhanced biodegradation unit typically operates at a food-to-microorganism ratio in the range of 0.05 to 1.0 kg of biological oxygen demand per kg of biomass per day, a mixed liquor suspended solids ratio in the range of 1 to 8 grams per liter (0.008 to 0.7 pounds per liter), and a residence time in the range of 3 to 36 hours.

(c) The owner and operator shall demonstrate that each treatment process or wastewater treatment system unit, except as provided in paragraph (d) of this section, achieves the appropriate conditions specified in paragraphs (a) or (b) of this section in accordance with the following requirements:

(1) Engineering calculations in accordance with requirements specified in §61.356(e) of this subpart; or

(2) Performance tests conducted using the test methods and procedures that meet the requirements specified in §61.355 of this subpart.

(d) A treatment process or waste stream is in compliance with the requirements of this subpart and exempt from the requirements of paragraph (c) of this section provided that the owner or operator documents that the treatment process or waste stream is in compliance with other regulatory requirements as follows:

(1) The treatment process is a hazardous waste incinerator for which the owner or operator has been issued a final permit under 40 CFR part 270 and complies with the requirements of 40 CFR part 264, subpart O;

(2) The treatment process is an industrial furnace or boiler burning hazardous waste for energy recovery for which the owner or operator has been issued a final permit under 40 CFR part 270 and complies with the requirements of 40 CFR part 266, subpart D;

(3) The waste stream is treated by a means or to a level that meets benzene-specific treatment standards in accordance with the Land Disposal Restrictions under 40 CFR part 268, and the treatment process is designed and operated with a closed-vent system and control device meeting the requirements of §61.349 of this subpart;

(4) The waste stream is treated by a means or to a level that meets benzene-specific effluent limitations or performance standards in accordance with the Effluent Guidelines and Standards under 40 CFR parts 401–464, and the treatment process is designed and operated with a closed-vent system and control device meeting the requirements of §61.349 of this subpart; or

(5) The waste stream is discharged to an underground injection well for which the owner or operator has been issued a final permit under 40 CFR part 270 and complies with the requirements of 40 CFR part 122.

(e) Except as specified in paragraph (e)(3) of this section, if the treatment process or wastewater treatment system unit has any openings (e.g., access doors, hatches, etc.), all such openings shall be sealed (e.g., gasketed, latched, etc.) and kept closed at all times when waste is being treated, except during inspection and maintenance.

(1) Each seal, access door, and all other openings shall be checked by visual inspections initially and quarterly thereafter to ensure that no cracks or gaps occur and that openings are closed and gasketed properly.

(2) Except as provided in §61.350 of this subpart, when a broken seal or gasket or other problem is identified, first efforts at repair shall be made as soon as practicable, but not later than 15 calendar days after identification.

(3) If the cover and closed-vent system operate such that the treatment process and wastewater treatment system unit are maintained at a pressure less than atmospheric pressure, the owner or operator may operate the system with an opening that is not sealed and kept closed at all times if the following conditions are met:

(i) The purpose of the opening is to provide dilution air to reduce the explosion hazard;

(ii) The opening is designed to operate with no detectable emissions as indicated by an instrument reading of less than 500 ppmv above background, as determined initially and thereafter at least once per year by the methods specified in §61.355(h); and

(iii) The pressure is monitored continuously to ensure that the pressure in the treatment process and wastewater treatment system unit remain below atmospheric pressure.

(f) Except for treatment processes complying with paragraph (d) of this section, the Administrator may request at any time an owner or operator demonstrate that a treatment process or wastewater treatment system unit meets the applicable requirements specified in paragraphs (a) or (b) of this section by conducting a performance test using the test methods and procedures as required in §61.355 of this subpart.

(g) The owner or operator of a treatment process or wastewater treatment system unit that is used to comply with the provisions of this section shall monitor the unit in accordance with the applicable requirements in §61.354 of this subpart.

[55 FR 8346, Mar. 7, 1990, as amended at 55 FR 37231, Sept. 10, 1990; 58 FR 3098, Jan. 7, 1993; 65 FR 62160, Oct. 17, 2000]

§ 61.349 Standards: Closed-ventsystems and control devices.

(a) For each closed-vent system and control device used to comply with standards in accordance with §§61.343 through 61.348 of this subpart, the owner or operator shall properly design, install, operate, and maintain the closed-vent system and control device in accordance with the following requirements:

(1) The closed-vent system shall:

(i) Be designed to operate with no detectable emissions as indicated by an instrument reading of less than 500 ppmv above background, as determined initially and thereafter at least once per year by the methods specified in §61.355(h) of this subpart.

(ii) Vent systems that contain any bypass line that could divert the vent stream away from a control device used to comply with the provisions of this subpart shall install, maintain, and operate according to the manufacturer's specifications a flow indicator that provides a record of vent stream flow away from the control device at least once every 15 minutes, except as provided in paragraph (a)(1)(ii)(B) of this section.

(A) The flow indicator shall be installed at the entrance to any bypass line that could divert the vent stream away from the control device to the atmosphere.

(B) Where the bypass line valve is secured in the closed position with a car-seal or a lock-and-key type configuration, a flow indicator is not required.

(iii) All gauging and sampling devices shall be gas-tight except when gauging or sampling is taking place.

(iv) For each closed-vent system complying with paragraph (a) of this section, one or more devices which vent directly to the atmosphere may be used on the closed-vent system provided each device remains in a closed, sealed position during normal operations except when the device needs to open to prevent physical damage or permanent deformation of the closed-vent system resulting from malfunction of the unit in accordance with good engineering and safety practices for handling flammable, explosive, or other hazardous materials.

(2) The control device shall be designed and operated in accordance with the following conditions:

(i) An enclosed combustion device (e.g., a vapor incinerator, boiler, or process heater) shall meet one of the following conditions:

(A) Reduce the organic emissions vented to it by 95 weight percent or greater;

(B) Achieve a total organic compound concentration of 20 ppmv (as the sum of the concentrations for individual compounds using Method 18) on a dry basis corrected to 3 percent oxygen; or

(C) Provide a minimum residence time of 0.5 seconds at a minimum temperature of 760 °C (1,400 °F). If a boiler or process heater issued as the control device, then the vent stream shall be introduced into the flame zone of the boiler or process heater.

(ii) A vapor recovery system (e.g., a carbon adsorption system or a condenser) shall recover or control the organic emissions vented to it with an efficiency of 95 weight percent or greater, or shall recover or control the benzene emissions vented to it with an efficiency of 98 weight percent or greater.

(iii) A flare shall comply with the requirements of 40 CFR 60.18.

(iv) A control device other than those described in paragraphs (a)(2) (i) through (iii) of this section may be used provided that the following conditions are met:

(A) The device shall recover or control the organic emissions vented to it with an efficiency of 95 weight percent or greater, or shall recover or control the benzene emissions vented to it with an efficiency of 98 weight percent or greater.

(B) The owner or operator shall develop test data and design information that documents the control device will achieve an emission control efficiency of either 95 percent or greater for organic compounds or 98 percent or greater for benzene.

(C) The owner or operator shall identify:

(*1*) The critical operating parameters that affect the emission control performance of the device;

(*2*) The range of values of these operating parameters that ensure the emission control efficiency specified in paragraph (a)(2)(iv)(A) of this section is maintained during operation of the device; and

(*3*) How these operating parameters will be monitored to ensure the proper operation and maintenance of the device.

(D) The owner or operator shall submit the information and data specified in paragraphs (a)(2)(iv) (B) and (C) of this section to the Administrator prior to operation of the alternative control device.

(E) The Administrator will determine, based on the information submitted under paragraph (a)(2)(iv)(D) of this section, if the control device subiect to paragraph (a)(2)(iv) of this section meets the requirements of §61.349. The control device subject to paragraph (a)(2)(iv) of this section may be operated prior to receiving approval from the Administrator. However, if the Administrator determines that the control device does not meet the requirements of §61.349, the facility may be subject to enforcement action beginning from the time the control device began operation.

(b) Each closed-vent system and control device used to comply with this subpart shall be operated at all times when waste is placed in the waste management unit vented to the control device except when maintenance or repair of the waste management unit cannot be completed without a shutdown of the control device.

(c) An owner and operator shall demonstrate that each control device, except for a flare, achieves the appropriate conditions specified in paragraph (a)(2) of this section by using one of the following methods:

(1) Engineering calculations in accordance with requirements specified in §61.356(f) of this subpart; or

(2) Performance tests conducted using the test methods and procedures that meet the requirements specified in §61.355 of this subpart.

(d) An owner or operator shall demonstrate compliance of each flare in accordance with paragraph (a)(2)(iii) of this section.

(e) The Administrator may request at any time an owner or operator demonstrate that a control device meets the applicable conditions specified in paragraph (a)(2) of this section by conducting a performance test using the test methods and procedures as required in §61.355, and for control devices subject to paragraph (a)(2)(iv) of this section, the Administrator may specify alternative test methods and procedures, as appropriate.

(f) Each closed-vent system and control device shall be visually inspected initially and quarterly thereafter. The visual inspection shall include inspection of ductwork and piping and connections to covers and control devices for evidence of visable defects such as holes in ductwork or piping and loose connections.

(g) Except as provided in §61.350 of this subpart, if visible defects are observed during an inspection, or if other problems are identified, or if detectable emissions are measured, a first effort to repair the closed-vent system and control device shall be made as soon as practicable but no later than 5 calendar days after detection. Repair shall be completed no later than 15 calendar days after the emissions are detected or the visible defect is observed.

(h) The owner or operator of a control device that is used to comply with the provisions of this section shall monitor the control device in accordance with §61.354(c) of this subpart.

[55 FR 8346, Mar. 7, 1990; 55 FR 12444, Apr. 3, 1990, as amended at 55 FR 37231, Sept. 10, 1990; 58 FR 3098, Jan. 7, 1993; 65 FR 62160, Oct. 17, 2000]

§ 61.350 Standards: Delay of repair.

(a) Delay of repair of facilities or units that are subject to the provisions of this subpart will be allowed if the repair is technically impossible without a complete or partial facility or unit shutdown.

(b) Repair of such equipment shall occur before the end of the next facility or unit shutdown.

§ 61.351 Alternative standards for tanks.

(a) As an alternative to the standards for tanks specified in §61.343 of this subpart, an owner or operator may elect to comply with one of the following:

(1) A fixed roof and internal floating roof meeting the requirements in 40 CFR 60.112b(a)(1);

(2) An external floating roof meeting the requirements of 40 CFR 60.112b (a)(2); or

(3) An alternative means of emission limitation as described in 40 CFR 60.114b.

(b) If an owner or operator elects to comply with the provisions of this section, then the owner or operator is exempt from the provisions of §61.343 of this subpart applicable to the same facilities.

[55 FR 8346, Mar. 7, 1990, as amended at 55 FR 37231, Sept. 10, 1990]

§ 61.352 Alternative standards for oil-water separators.

(a) As an alternative to the standards for oil-water separators specified in §61.347 of this subpart, an owner or operator may elect to comply with one of the following:

(1) A floating roof meeting the requirements in 40 CFR 60.693–2(a); or

(2) An alternative means of emission limitation as described in 40 CFR 60.694.

(b) For portions of the oil-water separator where it is infeasible to construct and operate a floating roof, such as over the weir mechanism, a fixed roof vented to a vapor control device that meets the requirements in §§61.347 and 61.349 of this subpart shall be installed and operated.

(c) Except as provided in paragraph (b) of this section, if an owner or operator elects to comply with the provisions of this section, then the owner or operator is exempt from the provisions in §61.347 of this subpart applicable to the same facilities.

§ 61.353 Alternative means of emission limitation.

(a) If, in the Administrator's judgment, an alternative means of emission limitation will achieve a reduction in benzene emissions at least equivalent to the reduction in benzene emissions from the source achieved by the applicable design, equipment, work practice, or operational requirements in §§61.342 through 61.349, the Administrator will publish in theFederal Registera notice permitting the use of the alternative means for purposes of compliance with that requirement. The notice may condition the permission on requirements related to the operation and maintenance of the alternative means.

(b) Any notice under paragraph (a) of this section shall be published only after public notice and an opportunity for a hearing.

(c) Any person seeking permission under this section shall collect, verify, and submit to the Administrator information showing that the alternative means achieves equivalent emission reductions.

[55 FR 8346, Mar. 7, 1990, as amended at 58 FR 3099, Jan. 7, 1993]

§ 61.354 Monitoring of operations.

(a) Except for a treatment process or waste stream complying with §61.348(d), the owner or operator shall monitor each treatment process or wastewater treatment system unit to ensure the unit is properly operated and maintained by one of the following monitoring procedures:

(1) Measure the benzene concentration of the waste stream exiting the treatment process complying with §61.348(a)(1)(i) at least once per month by collecting and analyzing one or more samples using the procedures specified in §61.355(c)(3).

(2) Install, calibrate, operate, and maintain according to manufacturer's specifications equipment to continuously monitor and record a process parameter (or parameters) for the treatment process or wastewater treatment system unit that indicates proper system operation. The owner or operator shall inspect at least once each operating day the data recorded by the monitoring equipment (e.g., temperature monitor or flow indicator) to ensure that the unit is operating properly.

(b) If an owner or operator complies with the requirements of §61.348(b), then the owner or operator shall monitor each wastewater treatment system to ensure the unit is properly operated and maintained by the appropriate monitoring procedure as follows:

(1) For the first exempt waste management unit in each waste treatment train, other than an enhanced biodegradation unit, measure the flow rate, using the procedures of §61.355(b), and the benzene concentration of each waste stream entering the unit at least once per month by collecting and analyzing one or more samples using the procedures specified in §61.355(c)(3).

(2) For each enhanced biodegradation unit that is the first exempt waste management unit in a treatment train, measure the benzene concentration of each waste stream entering the unit at least once per month by collecting and analyzing one or more samples using the procedures specified in §61.355(c)(3).

(c) An owner or operator subject to the requirements in §61.349 of this subpart shall install, calibrate, maintain, and operate according to the manufacturer's specifications a device to continuously monitor the control device operation as specified in the following paragraphs, unless alternative monitoring procedures or requirements are approved for that facility by the Administrator. The owner or operator shall inspect at least once each operating day the data recorded by the monitoring equipment (e.g., temperature monitor or flow indicator) to ensure that the control device is operating properly.

(1) For a thermal vapor incinerator, a temperature monitoring device equipped with a continuous recorder. The device shall have an accuracy of ±1 percent of the temperature being monitored in °C or ±0.5 °C, whichever is greater. The temperature sensor shall be installed at a representative location in the combustion chamber.

(2) For a catalytic vapor incinerator, a temperature monitoring device equipped with a continuous recorder. The device shall be capable of monitoring temperature at two locations, and have an accuracy of ±1 percent of the temperature being monitored in °C or ±0.5 °C, whichever is greater. One temperature sensor shall be installed in the vent stream at the nearest feasible point to the catalyst bed inlet and a second temperature sensor shall be installed in the vent stream at the nearest feasible point to the catalyst bed outlet.

(3) For a flare, a monitoring device in accordance with 40 CFR 60.18(f)(2) equipped with a continuous recorder.

(4) For a boiler or process heater having a design heat input capacity less than 44 MW (150×10^6 BTU/hr), a temperature monitoring device equipped with a continuous recorder. The device shall have an accuracy of ±1 percent of the temperature being monitored in °C or ±0.5 °C, whichever is greater. The temperature sensor shall be installed at a representative location in the combustion chamber.

(5) For a boiler or process heater having a design heat input capacity greater than or equal to 44 MW (150 × 10^6 BTU/hr), a monitoring device equipped with a continuous recorder to measure a parameter(s) that indicates good combustion operating practices are being used.

(6) For a condenser, either:

(i) A monitoring device equipped with a continuous recorder to measure either the concentration level of the organic compounds or the concentration level of benzene in the exhaust vent stream from the condenser; or

(ii) A temperature monitoring device equipped with a continuous recorder. The device shall be capable of monitoring temperature at two locations, and have an accuracy of ±1 percent of the temperature being monitored in °C or ±0.5 °C, whichever is greater. One temperature sensor shall be installed at a location in the exhaust stream from the condenser, and a second temperature sensor shall be installed at a location in the coolant fluid exiting the condenser.

(7) For a carbon adsorption system that regenerates the carbon bed directly in the control device such as a fixed-bed carbon adsorber, either:

(i) A monitoring device equipped with a continuous recorder to measure either the concentration level of the organic compounds or the benzene concentration level in the exhaust vent stream from the carbon bed; or

(ii) A monitoring device equipped with a continuous recorder to measure a parameter that indicates the carbon bed is regenerated on a regular, predetermined time cycle.

(8) For a vapor recovery system other than a condenser or carbon adsorption system, a monitoring device equipped with a continuous recorder to measure either the concentration level of the organic compounds or the benzene concentration level in the exhaust vent stream from the control device.

(9) For a control device subject to the requirements of §61.349(a)(2)(iv), devices to monitor the parameters as specified in §61.349(a)(2)(iv)(C).

(d) For a carbon adsorption system that does not regenerate the carbon bed directly on site in the control device (e.g., a carbon canister), either the concentration level of the organic compounds or the concentration level of benzene in the exhaust vent stream from the carbon adsorption system shall be monitored on a regular schedule, and the existing carbon shall be replaced with fresh carbon immediately when carbon breakthrough is indicated. The device shall be monitored on a daily basis or at intervals no greater than 20 percent of the design carbon replacement interval, whichever is greater. As an alternative to conducting this monitoring, an owner or operator may replace the carbon in the carbon adsorption system with fresh carbon at a regular predetermined time interval that is less than the carbon replacement interval that is determined by the maximum design flow rate and either the organic concentration or the benzene concentration in the gas stream vented to the carbon adsorption system.

(e) An alternative operation or process parameter may be monitored if it can be demonstrated that another parameter will ensure that the control device is operated in conformance with these standards and the control device's design specifications.

(f) Owners or operators using a closed-vent system that contains any bypass line that could divert a vent stream from a control device used to comply with the provisions of this subpart shall do the following:

(1) Visually inspect the bypass line valve at least once every month, checking the position of the valve and the condition of the car-seal or closure mechanism required under §61.349(a)(1)(ii) to ensure that the valve is maintained in the closed position and the vent stream is not diverted through the bypass line.

(2) Visually inspect the readings from each flow monitoring device required by §61.349(a)(1)(ii) at least once each operating day to check that vapors are being routed to the control device as required.

(g) Each owner or operator who uses a system for emission control that is maintained at a pressure less than atmospheric pressure with openings to provide dilution air shall install, calibrate, maintain, and operate according to the manufacturer's specifications a device equipped with a continuous recorder to monitor the pressure in the unit to ensure that it is less than atmospheric pressure.

[55 FR 8346, Mar. 7, 1990, as amended at 58 FR 3099, Jan. 7, 1993; 65 FR 62160, Oct. 17, 2000]

§ 61.355 Test methods, procedures, and compliance provisions.

(a) An owner or operator shall determine the total annual benzene quantity from facility waste by the following procedure:

(1) For each waste stream subject to this subpart having a flow-weighted annual average water content greater than 10 percent water, on a volume basis as total water, or is mixed with water or other wastes at any time and the resulting mixture has an annual average water content greater than 10 percent as specified in §61.342(a), the owner or operator shall:

(i) Determine the annual waste quantity for each waste stream using the procedures specified in paragraph (b) of this section.

(ii) Determine the flow-weighted annual average benzene concentration for each waste stream using the procedures specified in paragraph (c) of this section.

(iii) Calculate the annual benzene quantity for each waste stream by multiplying the annual waste quantity of the waste stream times the flow-weighted annual average benzene concentration.

(2) Total annual benzene quantity from facility waste is calculated by adding together the annual benzene quantity for each waste stream generated during the year and the annual benzene quantity for each process unit turnaround waste annualized according to paragraph (b)(4) of this section.

(3) If the total annual benzene quantity from facility waste is equal to or greater than 10 Mg/yr (11 ton/yr), then the owner or operator shall comply with the requirements of §61.342 (c), (d), or (e).

(4) If the total annual benzene quantity from facility waste is less than 10 Mg/yr (11 ton/yr) but is equal to or greater than 1 Mg/yr (1.1 ton/yr), then the owner or operator shall:

(i) Comply with the recordkeeping requirements of §61.356 and reporting requirements of §61.357 of this subpart; and

(ii) Repeat the determination of total annual benzene quantity from facility waste at least once per year and whenever there is a change in the process generating the waste that could cause the total annual benzene quantity from facility waste to increase to 10 Mg/yr (11 ton/yr) or more.

(5) If the total annual benzene quantity from facility waste is less than 1 Mg/yr (1.1 ton/yr), then the owner or operator shall:

(i) Comply with the recordkeeping requirements of §61.356 and reporting requirements of §61.357 of this subpart; and

(ii) Repeat the determination of total annual benzene quantity from facility waste whenever there is a change in the process generating the waste that could cause the total annual benzene quantity from facility waste to increase to 1 Mg/yr (1.1 ton/yr) or more.

(6) The benzene quantity in a waste stream that is generated less than one time per year, except as provided for process unit turnaround waste in paragraph (b)(4) of this section, shall be included in the determination of total annual benzene quantity from facility waste for the year in which the waste is

generated unless the waste stream is otherwise excluded from the determination of total annual benzene quantity from facility waste in accordance with paragraphs (a) through (c) of this section. The benzene quantity in this waste stream shall not be annualized or averaged over the time interval between the activities that resulted in generation of the waste, for purposes of determining the total annual benzene quantity from facility waste.

(b) For purposes of the calculation required by paragraph (a) of this section, an owner or operator shall determine the annual waste quantity at the point of waste generation, unless otherwise provided in paragraphs (b) (1), (2), (3), and (4) of this section, by one of the methods given in paragraphs (b) (5) through (7) of this section.

(1) The determination of annual waste quantity for sour water streams that are processed in sour water strippers shall be made at the point that the water exits the sour water stripper.

(2) The determination of annual waste quantity for wastes at coke by-product plants subject to and complying with the control requirements of §61.132, 61.133, 61.134, or 61.139 of subpart L of this part shall be made at the location that the waste stream exits the process unit component or waste management unit controlled by that subpart or at the exit of the ammonia still, provided that the following conditions are met:

(i) The transfer of wastes between units complying with the control requirements of subpart L of this part, process units, and the ammonia still is made through hard piping or other enclosed system.

(ii) The ammonia still meets the definition of a sour water stripper in §61.341.

(3) The determination of annual waste quantity for wastes that are received at hazardous waste treatment, storage, or disposal facilities from offsite shall be made at the point where the waste enters the hazardous waste treatment, storage, or disposal facility.

(4) The determination of annual waste quantity for each process unit turnaround waste generated only at 2 year or greater intervals, may be made by dividing the total quantity of waste generated during the most recent process unit turnaround by the time period (in the nearest tenth of a year) between the turnaround resulting in generation of the waste and the most recent preceding process turnaround for the unit. The resulting annual waste quantity shall be included in the calculation of the annual benzene quantity as provided in paragraph (a)(1)(iii) of this section for the year in which the turnaround occurs and for each subsequent year until the unit undergoes the next process turnaround. For estimates of total annual benzene quantity as specified in the 90-day report, required under §61.357(a)(1), the owner or operator shall estimate the waste quantity generated during the most recent turnaround, and the time period between turnarounds in accordance with good engineering practices. If the owner or operator chooses not to annualize process unit turnaround waste, as specified in this paragraph, then the process unit turnaround waste quantity shall be included in the calculation of the annual benzene quantity for the year in which the turnaround occurs.

(5) Select the highest annual quantity of waste managed from historical records representing the most recent 5 years of operation or, if the facility has been in service for less than 5 years but at least 1 year, from historical records representing the total operating life of the facility;

(6) Use the maximum design capacity of the waste management unit; or

(7) Use measurements that are representative of maximum waste generation rates.

(c) For the purposes of the calculation required by §§61.355(a) of this subpart, an owner or operator shall determine the flow-weighted annual average ben- zene concentration in a manner that meets the requirements given in paragraph (c)(1) of this section using either of the methods given in paragraphs (c)(2) and (c)(3) of this section.

(1) The determination of flow-weighted annual average benzene concentration shall meet all of the following criteria:

(i) The determination shall be made at the point of waste generation except for the specific cases given in paragraphs (c)(1)(i)(A) through (D) of this section.

(A) The determination for sour water streams that are processed in sour water strippers shall be made at the point that the water exits the sour water stripper.

(B) The determination for wastes at coke by-product plants subject to and complying with the control requirements of §61.132, 61.133, 61.134, or 61.139 of subpart L of this part shall be made at the location that the waste stream exits the process unit component or waste management unit controlled by that subpart or at the exit of the ammonia still, provided that the following conditions are met:

(*1*) The transfer of wastes between units complying with the control requirements of subpart L of this part, process units, and the ammonia still is made through hard piping or other enclosed system.

(*2*) The ammonia still meets the definition of a sour water stripper in §61.341.

(C) The determination for wastes that are received from offsite shall be made at the point where the waste enters the hazardous waste treatment, storage, or disposal facility.

(D) The determination of flow-weighted annual average benzene concentration for process unit turnaround waste shall be made using either of the methods given in paragraph (c)(2) or (c)(3) of this section. The resulting flow-weighted annual average benzene concentration shall be included in the calculation of annual benzene quantity as provided in paragraph (a)(1)(iii) of this section for the year in which the turnaround occurs and for each subsequent year until the unit undergoes the next process unit turnaround.

(ii) Volatilization of the benzene by exposure to air shall not be used in the determination to reduce the benzene concentration.

(iii) Mixing or diluting the waste stream with other wastes or other materials shall not be used in the determination—to reduce the benzene concentration.

(iv) The determination shall be made prior to any treatment of the waste that removes benzene, except as specified in paragraphs (c)(1)(i)(A) through (D) of this section.

(v) For wastes with multiple phases, the determination shall provide the weighted-average benzene concentration based on the benzene concentration in each phase of the waste and the relative proportion of the phases.

(2) *Knowledge of the waste.* The owner or operator shall provide sufficient information to document the flow-weighted annual average benzene concentration of each waste stream. Examples of information that could constitute knowledge include material balances, records of chemicals purchases, or previous test results provided the results are still relevant to the current waste stream conditions. If test data are used, then the owner or operator shall provide documentation describing the testing protocol and the means by which sampling variability and analytical variability were accounted for in the determination of the flow-weighted annual average benzene concentration for the waste stream. When an owner or operator and the Administrator do not agree on determinations of the flow-weighted annual average benzene concentration based on knowledge of the waste, the procedures under paragraph (c)(3) of this section shall be used to resolve the disagreement.

(3) Measurements of the benzene concentration in the waste stream in accordance with the following procedures:

(i) Collect a minimum of three representative samples from each waste stream. Where feasible, samples shall be taken from an enclosed pipe prior to the waste being exposed to the atmosphere.

(ii) For waste in enclosed pipes, the following procedures shall be used:

(A) Samples shall be collected prior to the waste being exposed to the atmosphere in order to minimize the loss of benzene prior to sampling.

(B) A static mixer shall be installed in the process line or in a by-pass line unless the owner or operator demonstrates that installation of a static mixer in the line is not necessary to accurately determine the benzene concentration of the waste stream.

(C) The sampling tap shall be located within two pipe diameters of the static mixer outlet.

(D) Prior to the initiation of sampling, sample lines and cooling coil shall be purged with at least four volumes of waste.

(E) After purging, the sample flow shall be directed to a sample container and the tip of the sampling tube shall be kept below the surface of the waste during sampling to minimize contact with the atmosphere.

(F) Samples shall be collected at a flow rate such that the cooling coil is able to maintain a waste temperature less than 10 °C (50 °F).

(G) After filling, the sample container shall be capped immediately (within 5 seconds) to leave a minimum headspace in the container.

(H) The sample containers shall immediately be cooled and maintained at a temperature below 10 °C (50 °F) for transfer to the laboratory.

(iii) When sampling from an enclosed pipe is not feasible, a minimum of three representative samples shall be collected in a manner to minimize exposure of the sample to the atmosphere and loss of benzene prior to sampling.

(iv) Each waste sample shall be analyzed using one of the following test methods for determining the benzene concentration in a waste stream:

(A) Method 8020, Aromatic Volatile Organics, in “Test Methods for Evaluating Solid Waste, Physical/Chemical Methods,” EPA Publication No. SW–846 (incorporation by reference as specified in §61.18 of this part);

(B) Method 8021, Volatile Organic Compounds in Water by Purge and Trap Capillary Column Gas Chromatography with Photoionization and Electrolytic Conductivity Detectors in Series in “Test Methods for Evaluating Solid Waste, Physical/Chemical Methods,” EPA Publication No. SW–846 (incorporation by reference as specified in §61.18 of this part);

(C) Method 8240, Gas Chromatography/Mass Spectrometry for Volatile Organics in “Test Methods for Evaluating Solid Waste, Physical/Chemical Methods,” EPA Publication No. SW–846 (incorporation by reference as specified in §61.18 of this part);

(D) Method 8260, Gas Chromatography/Mass Spectrometry for Volatile Organics: Capillary Column Technique in “Test Methods for Evaluating Solid Waste, Physical/Chemical Methods,” EPA Publication No. SW–846 (incorporation by reference as specified in §61.18 of this part);

(E) Method 602, Purgeable Aromatics, as described in 40 CFR part 136, appendix A, Test Procedures for Analysis of Organic Pollutants, for wastewaters for which this is an approved EPA methods; or

(F) Method 624, Purgeables, as described in 40 CFR part 136, appendix A, Test Procedures for Analysis of Organic Pollutants, for wastewaters for which this is an approved EPA method.

(v) The flow-weighted annual average benzene concentration shall be calculated by averaging the results of the sample analyses as follows:

$$\bar{C} = \frac{1}{Q_t} \times \sum_{i=1}^{n} (Q_i)(C_i)$$

Where:

C=Flow-weighted annual average benzene concentration for waste stream, ppmw.

Q_t=Total annual waste quantity for waste stream, kg/yr (lb/yr).

n=Number of waste samples (at least 3).

Q_i=Annual waste quantity for waste stream represented by C_i, kg/yr (lb/yr).

C_i=Measured concentration of benzene in waste sample i, ppmw.

(d) An owner or operator using performance tests to demonstrate compliance of a treatment process with §61.348 (a)(1)(i) shall measure the flow-weighted annual average benzene concentration of the waste stream exiting the treatment process by collecting and analyzing a minimum of three representative samples of the waste stream using the procedures in paragraph (c)(3) of this section. The test shall be conducted under conditions that exist when the treatment process is operating at the highest inlet waste stream flow rate and benzene content expected to occur. Operations during periods of startup, shutdown, and malfunction shall not constitute representative conditions for the purpose of a test. The owner or operator shall record all process information as is necessary to document the operating conditions during the test.

(e) An owner or operator using performance tests to demonstrate compliance of a treatment process with §61.348(a)(1)(ii) of this subpart shall determine the percent reduction of benzene in the waste stream on a mass basis by the following procedure:

(1) The test shall be conducted under conditions that exist when the treatment process is operating at the highest inlet waste stream flow rate and benzene content expected to occur. Operations during periods of startup, shutdown, and malfunction shall not constitute representative conditions for the purpose of a test. The owner or operator shall record all process information as is necessary to document the operating conditions during the test.

(2) All testing equipment shall be prepared and installed as specified in the appropriate test methods.

(3) The mass flow rate of benzene entering the treatment process (E_b) shall be determined by computing the product of the flow rate of the waste stream entering the treatment process, as determined by the inlet flow meter, and the benzene concentration of the waste stream, as determined using the sampling and analytical procedures specified in paragraph (c)(2) or (c)(3) of this section. Three grab samples of the waste shall be taken at equally spaced time intervals over a 1-hour period. Each 1-hour period constitutes a run, and the performance test shall consist of a minimum of 3 runs conducted over a 3-hour period. The mass flow rate of benzene entering the treatment process is calculated as follows:

$$E_b = \frac{K}{n \times 10^6} \left[\sum_{i=1}^{n} V_i C_i \right]$$

Where:

E_b= Mass flow rate of benzene entering the treatment process, kg/hr (lb/hr).

K = Density of the waste stream, kg/m^3 (lb/ft^3).

V_i= Average volume flow rate of waste entering the treatment process during each run i, m^3 /hr (ft^3 /hr).

C_i= Average concentration of benzene in the waste stream entering the treatment process during each run i, ppmw.

n = Number of runs.

10^6 = Conversion factor for ppmw.

(4) The mass flow rate of benzene exiting the treatment process (E_a) shall be determined by computing the product of the flow rate of the waste stream exiting the treatment process, as determined by the outlet flow meter or the inlet flow meter, and the benzene concentration of the waste stream, as determined using the sampling and analytical procedures specified in paragraph (c)(2) or (c)(3) of this section. Three grab samples of the waste shall be taken at equally spaced time intervals over a 1-hour period. Each 1-hour period constitutes a run, and the performance test shall consist of a minimum of 3 runs conducted over the same 3-hour period at which the mass flow rate of benzene entering the treatment process is determined. The mass flow rate of benzene exiting the treatment process is calculated as follows:

$$E_a = \frac{K}{n \times 10^6}\left[\sum_{i=1}^{n} V_i C_i\right]$$

Where:

E_a= Mass flow rate of benzene exiting the treatment process, kg/hr (lb/hr).

K = Density of the waste stream, kg/m^3 (lb/ft^3).

V_i= Average volume flow rate of waste exiting the treatment process during each run i, m^3 /hr (ft^3 /hr).

C_i= Average concentration of benzene in the waste stream exiting the treatment process during each run i, ppmw.

n = Number of runs.

10^6 = Conversion factor for ppmw.

(f) An owner or operator using performance tests to demonstrate compliance of a treatment process with §61.348(a)(1)(iii) of this subpart shall determine the benzene destruction efficiency for the combustion unit by the following procedure:

(1) The test shall be conducted under conditions that exist when the combustion unit is operating at the highest inlet waste stream flow rate and benzene content expected to occur. Operations during periods of startup, shutdown, and malfunction shall not constitute representative conditions for the purpose of a test. The owner or operator shall record all process information necessary to document the operating conditions during the test.

(2) All testing equipment shall be prepared and installed as specified in the appropriate test methods.

(3) The mass flow rate of benzene entering the combustion unit shall be determined by computing the product of the flow rate of the waste stream entering the combustion unit, as determined by the inlet flow meter, and the benzene concentration of the waste stream, as determined using the sampling procedures in

paragraph (c)(2) or (c)(3) of this section. Three grab samples of the waste shall be taken at equally spaced time intervals over a 1-hour period. Each 1-hour period constitutes a run, and the performance test shall consist of a minimum of 3 runs conducted over a 3-hour period. The mass flow rate of benzene into the combustion unit is calculated as follows:

$$E_b = \frac{K}{n \times 10^6}\left[\sum_{i=1}^{n} V_i C_i\right]$$

Where:

E_b= Mass flow rate of benzene entering the combustion unit, kg/hr (lb/hr).

K = Density of the waste stream, kg/m^3 (lb/ft^3).

V_i= Average volume flow rate of waste entering the combustion unit during each run i, m^3 /hr (ft^3 /hr).

C_i= Average concentration of benzene in the waste stream entering the combustion unit during each run i, ppmw.

n = Number of runs.

10^6 = Conversion factor for ppmw.

(4) The mass flow rate of benzene exiting the combustion unit exhaust stack shall be determined as follows:

(i) The time period for the test shall not be less than 3 hours during which at least 3 stack gas samples are collected and be the same time period at which the mass flow rate of benzene entering the treatment process is determined. Each sample shall be collected over a 1-hour period (e.g., in a tedlar bag) to represent a time-integrated composite sample and each 1-hour period shall correspond to the periods when the waste feed is sampled.

(ii) A run shall consist of a 1-hour period during the test. For each run:

(A) The reading from each measurement shall be recorded;

(B) The volume exhausted shall be determined using Method 2, 2A, 2C, or 2D from appendix A of 40 CFR part 60, as appropriate.

(C) The average benzene concentration in the exhaust downstream of the combustion unit shall be determined using Method 18 from appendix A of 40 CFR part 60.

(iii) The mass of benzene emitted during each run shall be calculated as follows:

$$M_i = D_b V C\left(10^{-6}\right)$$

Where:

M_i= Mass of benzene emitted during run i, kg (lb).

V = Volume of air-vapor mixture exhausted at standard conditions, m^3 (ft^3).

C = Concentration of benzene measured in the exhaust, ppmv.

D_b= Density of benzene, 3.24 kg/m^3 (0.202 lb/ft^3).

10^6 = Conversion factor for ppmv.

(iv) The benzene mass emission rate in the exhaust shall be calculated as follows:

$$E_a = \left(\sum_{i=1}^{n} M_i \right) / T$$

Where:

E_a= Mass flow rate of benzene emitted from the combustion unit, kg/hr (lb/hr).

M_i= Mass of benzene emitted from the combustion unit during run i, kg (lb).

T = Total time of all runs, hr.

n = Number of runs.

(5) The benzene destruction efficiency for the combustion unit shall be calculated as follows:

$$R = \frac{E_b - E_a}{E_b} \times 100$$

Where:

R = Benzene destruction efficiency for the combustion unit, percent.

E_b= Mass flow rate of benzene entering the combustion unit, kg/hr (lb/hr).

E_a= Mass flow rate of benzene emitted from the combustion unit, kg/hr (lb/hr).

(g) An owner or operator using performance tests to demonstrate compliance of a wastewater treatment system unit with §61.348(b) shall measure the flow-weighted annual average benzene concentration of the wastewater stream where the waste stream enters an exempt waste management unit by collecting and analyzing a minimum of three representative samples of the waste stream using the procedures in paragraph (c)(3) of this section. The test shall be conducted under conditions that exist when the wastewater treatment system is operating at the highest inlet wastewater stream flow rate and benzene content expected to occur. Operations during periods of startup, shutdown, and malfunction shall not constitute representative conditions for the purpose of a test. The owner or operator shall record all process information as is necessary to document the operating conditions during the test.

(h) An owner or operator shall test equipment for compliance with no detectable emissions as required in §§61.343 through 61.347, and §61.349 of this subpart in accordance with the following requirements:

(1) Monitoring shall comply with Method 21 from appendix A of 40 CFR part 60.

(2) The detection instrument shall meet the performance criteria of Method 21.

(3) The instrument shall be calibrated before use on each day of its use by the procedures specified in Method 21.

(4) Calibration gases shall be:

(i) Zero air (less than 10 ppm of hydrocarbon in air); and

(ii) A mixture of methane or n-hexane and air at a concentration of approximately, but less than, 10,000 ppm methane or n-hexane.

(5) The background level shall be determined as set forth in Method 21.

(6) The instrument probe shall be traversed around all potential leak interfaces as close as possible to the interface as described in Method 21.

(7) The arithmetic difference between the maximum concentration indicated by the instrument and the background level is compared to 500 ppm for determining compliance.

(i) An owner or operator using a performance test to demonstrate compliance of a control device with either the organic reduction efficiency requirement or the benzene reduction efficiency requirement specified under §61.349(a)(2) shall use the following procedures:

(1) The test shall be conducted under conditions that exist when the waste management unit vented to the control device is operating at the highest load or capacity level expected to occur. Operations during periods of startup, shutdown, and malfunction shall not constitute representative conditions for the purpose of a test. The owner or operator shall record all process information necessary to document the operating conditions during the test.

(2) Sampling sites shall be selected using Method 1 or 1A from appendix A of 40 CFR part 60, as appropriate.

(3) The mass flow rate of either the organics or benzene entering and exiting the control device shall be determined as follows:

(i) The time period for the test shall not be less than 3 hours during which at least 3 stack gas samples are collected. Samples of the vent stream entering and exiting the control device shall be collected during the same time period. Each sample shall be collected over a 1-hour period (e.g., in a tedlar bag) to represent a time-integrated composite sample.

(ii) A run shall consist of a 1-hour period during the test. For each run:

(A) The reading from each measurement shall be recorded;

(B) The volume exhausted shall be determined using Method 2, 2A, 2C, or 2D from appendix A of 40 CFR part 60, as appropriate;

(C) The organic concentration or the benzene concentration, as appropriate, in the vent stream entering and exiting the control shall be determined using Method 18 from appendix A of 40 CFR part 60.

(iii) The mass of organics or benzene entering and exiting the control device during each run shall be calculated as follows:

$$M_{aj} = \frac{K_1 V_{aj}}{10^6}\left(\sum_{i=1}^{n} C_{ai} MW_i\right)$$

$$M_{bj} = \frac{K_1 V_{bj}}{10^6}\left(\sum_{i=1}^{n} C_{bi} MW_i\right)$$

M_{aj}= Mass of organics or benzene in the vent stream entering the control device during run j, kg (lb).

M_{bj}= Mass of organics or benzene in the vent stream exiting the control device during run j, kg (lb).

V_{aj}= Volume of vent stream entering the control device during run j, at standard conditions, m^3 (ft^3).

V_{bj}= Volume of vent stream exiting the control device during run j, at standard conditions, m^3 (ft^3).

C_{ai}= Organic concentration of compound i or the benzene concentration measured in the vent stream entering the control device as determined by Method 18, ppm by volume on a dry basis.

C_{bi}= Organic concentration of compound i or the benzene concentration measured in the vent stream exiting the control device as determined by Method 18, ppm by volume on a dry basis.

MW_i= Molecular weight of organic compound i in the vent stream, or the molecular weight of benzene, kg/kg-mol (lb/lb-mole).

n = Number of organic compounds in the vent stream; if benzene reduction efficiency is being demonstrated, then n=1.

K_1= Conversion factor for molar volume at standard conditions (293 K and 760 mm Hg (527 R and 14.7 psia))

= 0.0416 kg-mol/m^3 (0.00118 lb-mol/ft^3)

10^{-6}=Conversion factor for ppmv.

(iv) The mass flow rate of organics or benzene entering and exiting the control device shall be calculated as follows:

$$E_a - \left(\sum_{j=1}^{n} M_{aj}\right) / T$$

$$E_b - \left(\sum_{j=1}^{n} M_{bj}\right) / T$$

Where:

E_a= Mass flow rate of organics or benzene entering the control device, kg/hr (lb/hr).

E_b= Mass flow rate of organics or benzene exiting the control device, kg/hr (lb/hr).

M_{aj}= Mass of organics or benzene in the vent stream entering the control device during run j, kg (lb).

M_{bj}= Mass of organics or benzene in the vent stream exiting the control device during run j, kg (lb).

T = Total time of all runs, hr.

n = Number of runs.

(4) The organic reduction efficiency or the benzene reduction efficiency for the control device shall be calculated as follows:

$$R = \frac{E_a - E_b}{E_a} \times 100$$

Where:

R = Total organic reduction of efficiency or benzene reduction efficiency for the control device, percent.

E_b= Mass flow rate of organics or benzene entering the control device, kg/hr (lb/hr).

E_a= Mass flow rate of organic or benzene emitted from the control device, kg/hr (lb/hr).

(j) An owner or operator shall determine the benzene quantity for the purposes of the calculation required by §61.342 (c)(3)(ii)(B) according to the provisions of paragraph (a) of this section, except that the procedures in paragraph (a) of this section shall also apply to wastes with a water content of 10 percent or less.

(k) An owner or operator shall determine the benzene quantity for the purposes of the calculation required by §61.342(e)(2) by the following procedure:

(1) For each waste stream that is not controlled for air emissions in accordance with §61.343. 61.344, 61.345, 61.346, 61.347, or 61.348(a), as applicable to the waste management unit that manages the waste, the benzene quantity shall be determined as specified in paragraph (a) of this section, except that paragraph (b)(4) of this section shall not apply, i.e., the waste quantity for process unit turnaround waste is not annualized but shall be included in the determination of benzene quantity for the year in which the waste is generated for the purposes of the calculation required by §61.342(e)(2).

(2) For each waste stream that is controlled for air emissions in accordance with §61.343. 61.344, 61.345, 61.346, 61.347, or 61.348(a), as applicable to the waste management unit that manages the waste, the determination of annual waste quantity and flow-weighted annual average benzene concentration shall be made at the first applicable location as described in paragraphs (k)(2)(i), (k)(2)(ii), and (k)(2)(iii) of this section and prior to any reduction of benzene concentration through volatilization of the benzene, using the methods given in (k)(2)(iv) and (k)(2)(v) of this section.

(i) Where the waste stream enters the first waste management unit not complying with §§61.343, 61.344, 61.345, 61.346, 61.347, and 61.348(a) that are applicable to the waste management unit,

(ii) For each waste stream that is managed or treated only in compliance with §§61.343 through 61.348(a) up to the point of final direct discharge from the facility, the determination of benzene quantity shall be prior to any reduction of benzene concentration through volatilization of the benzene, or

(iii) For wastes managed in units controlled for air emissions in accordance with §§61.343, 61.344, 61.345, 61.346, 61.347, and 61.348(a), and then transferred offsite, facilities shall use the first applicable offsite location as described in paragraphs (k)(2)(i) and (k)(2)(ii) of this section if they have documentation from the offsite facility of the benzene quantity at this location. Facilities without this documentation for offsite wastes shall use the benzene quantity determined at the point where the transferred waste leaves the facility.

(iv) Annual waste quantity shall be determined using the procedures in paragraphs (b)(5), (6), or (7) of this section, and

(v) The flow-weighted annual average benzene concentration shall be determined using the procedures in paragraphs (c)(2) or (3) of this section.

(3) The benzene quantity in a waste stream that is generated less than one time per year, including process unit turnaround waste, shall be included in the determination of benzene quantity as determined in paragraph (k)(6) of this section for the year in which the waste is generated. The benzene quantity in this waste stream shall not be annualized or averaged over the time interval between the activities that resulted in generation of the waste for purposes of determining benzene quantity as determined in paragraph (k)(6) of this section.

(4) The benzene in waste entering an enhanced biodegradation unit, as defined in §61.348(b)(2)(ii)(B), shall not be included in the determination of benzene quantity, determined in paragraph (k)(6) of this section, if the following conditions are met:

(i) The benzene concentration for each waste stream entering the enhanced biodegradation unit is less than 10 ppmw on a flow-weighted annual average basis, and

(ii) All prior waste management units managing the waste comply with §§61.343, 61.344, 61.345, 61.346, 61.347 and 61.348(a).

(5) The benzene quantity for each waste stream in paragraph (k)(2) of this section shall be determined by multiplying the annual waste quantity of each waste stream times its flow-weighted annual average benzene concentration.

(6) The total benzene quantity for the purposes of the calculation required by §61.342(e)(2) shall be determined by adding together the benzene quantities determined in paragraphs (k)(1) and (k)(5) of this section for each applicable waste stream.

(7) If the benzene quantity determined in paragraph (6) of this section exceeds 6.0 Mg/yr (6.6 ton/yr) only because of multiple counting of the benzene quantity for a waste stream, the owner or operator may use the following procedures for the purposes of the calculation required by §61.342(e)(2):

(i) Determine which waste management units are involved in the multiple counting of benzene;

(ii) Determine the quantity of benzene that is emitted, recovered, or removed from the affected units identified in paragraph (k)(7)(i) of this section, or destroyed in the units if applicable, using either direct measurements or the best available estimation techniques developed or approved by the Administrator.

(iii) Adjust the benzene quantity to eliminate the multiple counting of benzene based on the results from paragraph (k)(7)(ii) of this section and determine the total benzene quantity for the purposes of the calculation required by §61.342(e)(2).

(iv) Submit in the annual report required under §61.357(a) a description of the methods used and the resulting calculations for the alternative procedure under paragraph (k)(7) of this section, the benzene

quantity determination from paragraph (k)(6) of this section, and the adjusted benzene quantity determination from paragraph (k)(7)(iii) of this section.

[55 FR 8346, Mar. 7, 1990; 55 FR 12444, Apr. 3, 1990, as amended at 55 FR 37231, Sept. 10, 1990; 58 FR 3099, Jan. 7, 1993; 65 FR 62160, Oct. 17, 2000]

§ 61.356 Recordkeeping requirements.

(a) Each owner or operator of a facility subject to the provisions of this subpart shall comply with the recordkeeping requirements of this section. Each record shall be maintained in a readily accessible location at the facility site for a period not less than two years from the date the information is recorded unless otherwise specified.

(b) Each owner or operator shall maintain records that identify each waste stream at the facility subject to this subpart, and indicate whether or not the waste stream is controlled for benzene emissions in accordance with this subpart. In addition the owner or operator shall maintain the following records:

(1) For each waste stream not controlled for benzene emissions in accordance with this subpart, the records shall include all test results, measurements, calculations, and other documentation used to determine the following information for the waste stream: waste stream identification, water content, whether or not the waste stream is a process wastewater stream, annual waste quantity, range of benzene concentrations, annual average flow-weighted benzene concentration, and annual benzene quantity.

(2) For each waste stream exempt from §61.342(c)(1) in accordance with §61.342(c)(3), the records shall include:

(i) All measurements, calculations, and other documentation used to determine that the continuous flow of process wastewater is less than 0.02 liters (0.005 gallons) per minute or the annual waste quantity of process wastewater is less than 10 Mg/yr (11 ton/yr) in accordance with §61.342(c)(3)(i), or

(ii) All measurements, calculations, and other documentation used to determine that the sum of the total annual benzene quantity in all exempt waste streams does not exceed 2.0 Mg/yr (2.2 ton/yr) in accordance with §61.342(c)(3)(ii).

(3) For each facility where process wastewater streams are controlled for benzene emissions in accordance with §61.342(d) of this subpart, the records shall include for each treated process wastewater stream all measurements, calculations, and other documentation used to determine the annual benzene quantity in the process wastewater stream exiting the treatment process.

(4) For each facility where waste streams are controlled for benzene emissions in accordance with §61.342(e), the records shall include for each waste stream all measurements, including the locations of the measurements, calculations, and other documentation used to determine that the total benzene quantity does not exceed 6.0 Mg/yr (6.6 ton/yr).

(5) For each facility where the annual waste quantity for process unit turnaround waste is determined in accordance with §61.355(b)(5), the records shall include all test results, measurements, calculations, and other documentation used to determine the following information: identification of each process unit at the facility that undergoes turnarounds, the date of the most recent turnaround for each process unit, identification of each process unit turnaround waste, the water content of each process unit turnaround waste, the annual waste quantity determined in accordance with §61.355(b)(5), the range of benzene concentrations in the waste, the annual average flow-weighted benzene concentration of the waste, and the annual benzene quantity calculated in accordance with §61.355(a)(1)(iii) of this section.

(6) For each facility where wastewater streams are controlled for benzene emissions in accordance with §61.348(b)(2), the records shall include all measurements, calculations, and other documentation used to determine the annual benzene content of the waste streams and the total annual benzene quantity contained in all waste streams managed or treated in exempt waste management units.

(c) An owner or operator transferring waste off-site to another facility for treatment in accordance with §61.342(f) shall maintain documentation for each offsite waste shipment that includes the following information: Date waste is shipped offsite, quantity of waste shipped offsite, name and address of the facility receiving the waste, and a copy of the notice sent with the waste shipment.

(d) An owner or operator using control equipment in accordance with §§61.343 through 61.347 shall maintain engineering design documentation for all control equipment that is installed on the waste management unit. The documentation shall be retained for the life of the control equipment. If a control device is used, then the owner or operator shall maintain the control device records required by paragraph (f) of this section.

(e) An owner or operator using a treatment process or wastewater treatment system unit in accordance with §61.348 of this subpart shall maintain the following records. The documentation shall be retained for the life of the unit.

(1) A statement signed and dated by the owner or operator certifying that the unit is designed to operate at the documented performance level when the waste stream entering the unit is at the highest waste stream flow rate and benzene content expected to occur.

(2) If engineering calculations are used to determine treatment process or wastewater treatment system unit performance, then the owner or operator shall maintain the complete design analysis for the unit. The design analysis shall include for example the following information: Design specifications, drawings, schematics, piping and instrumentation diagrams, and other documentation necessary to demonstrate the unit performance.

(3) If performance tests are used to determine treatment process or wastewater treatment system unit performance, then the owner or operator shall maintain all test information necessary to demonstrate the unit performance.

(i) A description of the unit including the following information: type of treatment process; manufacturer name and model number; and for each waste stream entering and exiting the unit, the waste stream type (e.g., process wastewater, sludge, slurry, etc.), and the design flow rate and benzene content.

(ii) Documentation describing the test protocol and the means by which sampling variability and analytical variability were accounted for in the determination of the unit performance. The description of the test protocol shall include the following information: sampling locations, sampling method, sampling frequency, and analytical procedures used for sample analysis.

(iii) Records of unit operating conditions during each test run including all key process parameters.

(iv) All test results.

(4) If a control device is used, then the owner or operator shall maintain the control device records required by paragraph (f) of this section.

(f) An owner or operator using a closed-vent system and control device in accordance with §61.349 of this subpart shall maintain the following records. The documentation shall be retained for the life of the control device.

(1) A statement signed and dated by the owner or operator certifying that the closed-vent system and control device is designed to operate at the documented performance level when the waste management unit vented to the control device is or would be operating at the highest load or capacity expected to occur.

(2) If engineering calculations are used to determine control device performance in accordance with §61.349(c), then a design analysis for the control device that includes for example:

(i) Specifications, drawings, schematics, and piping and instrumentation diagrams prepared by the owner or operator, or the control device manufacturer or vendor that describe the control device design based on acceptable engineering texts. The design analysis shall address the following vent stream characteristics and control device operating parameters:

(A) For a thermal vapor incinerator, the design analysis shall consider the vent stream composition, constituent concentrations, and flow rate. The design analysis shall also establish the design minimum and average temperature in the combustion zone and the combustion zone residence time.

(B) For a catalytic vapor incinerator, the design analysis shall consider the vent stream composition, constituent concentrations, and flow rate. The design analysis shall also establish the design minimum and average temperatures across the catalyst bed inlet and outlet.

(C) For a boiler or process heater, the design analysis shall consider the vent stream composition, constituent concentrations, and flow rate. The design analysis shall also establish the design minimum and average flame zone temperatures, combustion zone residence time, and description of method and location where the vent stream is introduced into the flame zone.

(D) For a flare, the design analysis shall consider the vent stream composition, constituent concentrations, and flow rate. The design analysis shall also consider the requirements specified in 40 CFR 60.18.

(E) For a condenser, the design analysis shall consider the vent stream composition, constituent concentration, flow rate, relative humidity, and temperature. The design analysis shall also establish the design outlet organic compound concentration level or the design outlet benzene concentration level, design average temperature of the condenser exhaust vent stream, and the design average temperatures of the coolant fluid at the condenser inlet and outlet.

(F) For a carbon adsorption system that regenerates the carbon bed directly on-site in the control device such as a fixed-bed adsorber, the design analysis shall consider the vent stream composition, constituent concentration, flow rate, relative humidity, and temperature. The design analysis shall also establish the design exhaust vent stream organic compound concentration level or the design exhaust vent stream benzene concentration level, number and capacity of carbon beds, type and working capacity of activated carbon used for carbon beds, design total steam flow over the period of each complete carbon bed regeneration cycle, duration of the carbon bed steaming and cooling/drying cycles, design carbon bed temperature after regeneration, design carbon bed regeneration time, and design service life of carbon.

(G) For a carbon adsorption system that does not regenerate the carbon bed directly on-site in the control device, such as a carbon canister, the design analysis shall consider the vent stream composition, constituent concentration, flow rate, relative humidity, and temperature. The design analysis shall also establish the design exhaust vent stream organic compound concentration level or the design exhaust vent stream benzene concentration level, capacity of carbon bed, type and working capacity of activated carbon used for carbon bed, and design carbon replacement interval based on the total carbon working capacity of the control device and source operating schedule.

(H) For a control device subject to the requirements of §61.349(a)(2)(iv), the design analysis shall consider the vent stream composition, constituent concentration, and flow rate. The design analysis shall also include all of the information submitted under §61.349 (a)(2)(iv).

(ii) [Reserved]

(3) If performance tests are used to determine control device performance in accordance with §61.349(c) of this subpart:

(i) A description of how it is determined that the test is conducted when the waste management unit or treatment process is operating at the highest load or capacity level. This description shall include the estimated or design flow rate and organic content of each vent stream and definition of the acceptable operating ranges of key process and control parameters during the test program.

(ii) A description of the control device including the type of control device, control device manufacturer's name and model number, control device dimensions, capacity, and construction materials.

(iii) A detailed description of sampling and monitoring procedures, including sampling and monitoring locations in the system, the equipment to be used, sampling and monitoring frequency, and planned analytical procedures for sample analysis.

(iv) All test results.

(g) An owner or operator shall maintain a record for each visual inspection required by §§61.343 through 61.347 of this subpart that identifies a problem (such as a broken seal, gap or other problem) which could result in benzene emissions. The record shall include the date of the inspection, waste management unit and control equipment location where the problem is identified, a description of the problem, a description of the corrective action taken, and the date the corrective action was completed.

(h) An owner or operator shall maintain a record for each test of no detectable emissions required by §§61.343 through 61.347 and §61.349 of this subpart. The record shall include the following information: date the test is performed, background level measured during test, and maximum concentration indicated by the instrument reading measured for each potential leak interface. If detectable emissions are measured at a leak interface, then the record shall also include the waste management unit, control equipment, and leak interface location where detectable emissions were measured, a description of the problem, a description of the corrective action taken, and the date the corrective action was completed.

(i) For each treatment process and wastewater treatment system unit operated to comply with §61.348, the owner or operator shall maintain documentation that includes the following information regarding the unit operation:

(1) Dates of startup and shutdown of the unit.

(2) If measurements of waste stream benzene concentration are performed in accordance with §61.354(a)(1) of this subpart, the owner or operator shall maintain records that include date each test is performed and all test results.

(3) If a process parameter is continuously monitored in accordance with §61.354(a)(2) of this subpart, the owner or operator shall maintain records that include a description of the operating parameter (or parameters) to be monitored to ensure that the unit will be operated in conformance with these standards and the unit's design specifications, and an explanation of the criteria used for selection of that parameter (or parameters). This documentation shall be kept for the life of the unit.

(4) If measurements of waste stream benzene concentration are performed in accordance with §61.354(b), the owner or operator shall maintain records that include the date each test is performed and all test results.

(5) Periods when the unit is not operated as designed.

(j) For each control device, the owner or operator shall maintain documentation that includes the following information regarding the control device operation:

(1) Dates of startup and shutdown of the closed-vent system and control device.

(2) A description of the operating parameter (or parameters) to be monitored to ensure that the control device will be operated in conformance with these standards and the control device's design specifications and an explanation of the criteria used for selection of that parameter (or parameters). This documentation shall be kept for the life of the control device.

(3) Periods when the closed-vent system and control device are not operated as designed including all periods and the duration when:

(i) Any valve car-seal or closure mechanism required under §61.349(a)(1)(ii) is broken or the by-pass line valve position has changed.

(ii) The flow monitoring devices required under §61.349(a)(1)(ii) indicate that vapors are not routed to the control device as required.

(4) If a thermal vapor incinerator is used, then the owner or operator shall maintain continuous records of the temperature of the gas stream in the combustion zone of the incinerator and records of all 3-hour periods of operation during which the average temperature of the gas stream in the combustion zone is more than 28 °C (50 °F) below the design combustion zone temperature.

(5) If a catalytic vapor incinerator is used, then the owner or operator shall maintain continuous records of the temperature of the gas stream both upstream and downstream of the catalyst bed of the incinerator, records of all 3-hour periods of operation during which the average temperature measured before the catalyst bed is more than 28 °C (50 °F) below the design gas stream temperature, and records of all 3-hour periods of operation during which the average temperature difference across the catalyst bed is less than 80 percent of the design temperature difference.

(6) If a boiler or process heater is used, then the owner or operator shall maintain records of each occurrence when there is a change in the location at which the vent stream is introduced into the flame zone as required by §61.349(a)(2)(i)(C). For a boiler or process heater having a design heat input capacity less than 44 MW (150 × 106 BTU/hr), the owner or operator shall maintain continuous records of the temperature of the gas stream in the combustion zone of the boiler or process heater and records of all 3-hour periods of operation during which the average temperature of the gas stream in the combustion zone is more than 28 °C (50 °F) below the design combustion zone temperature. For a boiler or process heater having a design heat input capacity greater than or equal to 44 MW (150 × 106 BTU/hr), the owner or operator shall maintain continuous records of the parameter(s) monitored in accordance with the requirements of §61.354(c)(5).

(7) If a flare is used, then the owner or operator shall maintain continuous records of the flare pilot flame monitoring and records of all periods during which the pilot flame is absent.

(8) If a condenser is used, then the owner or operator shall maintain records from the monitoring device of the parameters selected to be monitored in accordance with §61.354(c)(6). If concentration of organics or concentration of benzene in the control device outlet gas stream is monitored, then the owner or operator shall record all 3-hour periods of operation during which the concentration of organics or the concentration of benzene in the exhaust stream is more than 20 percent greater than the design value. If the temperature of the condenser exhaust stream and coolant fluid is monitored, then the owner or operator shall record all 3-hour periods of operation during which the temperature of the condenser exhaust vent stream is more than 6 °C (11 °F) above the design average exhaust vent stream temperature, or the temperature of the coolant fluid exiting the condenser is more than 6 °C (11 °F) above the design average coolant fluid temperature at the condenser outlet.

(9) If a carbon adsorber is used, then the owner or operator shall maintain records from the monitoring device of the concentration of organics or the concentration of benzene in the control device outlet gas stream. If the concentration of organics or the concentration of benzene in the control device outlet gas stream is monitored, then the owner or operator shall record all 3-hour periods of operation during which the concentration of organics or the concentration of benzene in the exhaust stream is more than 20 percent greater than the design value. If the carbon bed regeneration interval is monitored, then the owner or operator shall record each occurrence when the vent stream continues to flow through the control device beyond the predetermined carbon bed regeneration time.

(10) If a carbon adsorber that is not regenerated directly on site in the control device is used, then the owner or operator shall maintain records of dates and times when the control device is monitored, when breakthrough is measured, and shall record the date and time then the existing carbon in the control device is replaced with fresh carbon.

(11) If an alternative operational or process parameter is monitored for a control device, as allowed in §61.354(e) of this subpart, then the owner or operator shall maintain records of the continuously monitored parameter, including periods when the device is not operated as designed.

(12) If a control device subject to the requirements of §61.349(a)(2)(iv) is used, then the owner or operator shall maintain records of the parameters that are monitored and each occurrence when the parameters monitored are outside the range of values specified in §61.349(a)(2)(iv)(C), or other records as specified by the Administrator.

(k) An owner or operator who elects to install and operate the control equipment in §61.351 of this subpart shall comply with the recordkeeping requirements in 40 CFR 60.115b.

(l) An owner or operator who elects to install and operate the control equipment in §61.352 of this subpart shall maintain records of the following:

(1) The date, location, and corrective action for each visual inspection required by 40 CFR 60.693–2(a)(5), during which a broken seal, gap, or other problem is identified that could result in benzene emissions.

(2) Results of the seal gap measurements required by 40 CFR 60.693–2(a).

(m) If a system is used for emission control that is maintained at a pressure less than atmospheric pressure with openings to provide dilution air, then the owner or operator shall maintain records of the monitoring device and records of all periods during which the pressure in the unit is operated at a pressure that is equal to or greater than atmospheric pressure.

(n) Each owner or operator using a total enclosure to comply with control requirements for tanks in §61.343 or the control requirements for containers in §61.345 must keep the records required in paragraphs (n)(1) and (2) of this section. Owners or operators may use records as required in 40 CFR 264.1089(b)(2)(iv) or 40 CFR 265.1090(b)(2)(iv) for a tank or as required in 40 CFR 264.1089(d)(1) or 40 CFR 265.1090(d)(1) for a container to meet the recordkeeping requirement in paragraph (n)(1) of this section. The owner or operator must make the records of each verification of a total enclosure available for inspection upon request.

(1) Records of the most recent set of calculations and measurements performed to verify that the enclosure meets the criteria of a permanent total enclosure as specified in “Procedure T—Criteria for and Verification of a Permanent or Temporary Total Enclosure” in 40 CFR 52.741, appendix B;

(2) Records required for a closed-vent system and control device according to the requirements in paragraphs (d) (f), and (j) of this section.

[55 FR 8346, Mar. 7, 1990; 55 FR 12444, Apr. 3, 1990; 55 FR 18331, May 2, 1990, as amended at 58 FR 3103, Jan. 7, 1993; 65 FR 62161, Oct. 17, 2000; 67 FR 68533, Nov. 12, 2002]

§ 61.357 Reporting requirements.

(a) Each owner or operator of a chemical plant, petroleum refinery, coke by-product recovery plant, and any facility managing wastes from these industries shall submit to the Administrator within 90 days after January 7, 1993, or by the initial startup for a new source with an initial startup after the effective date, a report that summarizes the regulatory status of each waste stream subject to §61.342 and is determined by the procedures specified in §61.355(c) to contain benzene. Each owner or operator subject to this subpart who has no benzene onsite in wastes, products, by-products, or intermediates shall submit an initial report that is a statement to this effect. For all other owners or operators subject to this subpart, the report shall include the following information:

(1) Total annual benzene quantity from facility waste determined in accordance with §61.355(a) of this subpart.

(2) A table identifying each waste stream and whether or not the waste stream will be controlled for benzene emissions in accordance with the requirements of this subpart.

(3) For each waste stream identified as not being controlled for benzene emissions in accordance with the requirements of this subpart the following information shall be added to the table:

(i) Whether or not the water content of the waste stream is greater than 10 percent;

(ii) Whether or not the waste stream is a process wastewater stream, product tank drawdown, or landfill leachate;

(iii) Annual waste quantity for the waste stream;

(iv) Range of benzene concentrations for the waste stream;

(v) Annual average flow-weighted benzene concentration for the waste stream; and

(vi) Annual benzene quantity for the waste stream.

(4) The information required in paragraphs (a) (1), (2), and (3) of this section should represent the waste stream characteristics based on current configuration and operating conditions. An owner or operator only needs to list in the report those waste streams that contact materials containing benzene. The report does not need to include a description of the controls to be installed to comply with the standard or other information required in §61.10(a).

(b) If the total annual benzene quantity from facility waste is less than 1 Mg/yr (1.1 ton/yr), then the owner or operator shall submit to the Administrator a report that updates the information listed in paragraphs (a)(1) through (a)(3) of this section whenever there is a change in the process generating the waste stream that could cause the total annual benzene quantity from facility waste to increase to 1 Mg/yr (1.1 ton/yr) or more.

(c) If the total annual benzene quantity from facility waste is less than 10 Mg/yr (11 ton/yr) but is equal to or greater than 1 Mg/yr (1.1 ton/yr), then the owner or operator shall submit to the Administrator a report that updates the information listed in paragraphs (a)(1) through (a)(3) of this section. The report shall be submitted annually and whenever there is a change in the process generating the waste stream that could cause the total annual benzene quantity from facility waste to increase to 10 Mg/yr (11 ton/yr) or more. If the information in the annual report required by paragraphs (a)(1) through (a)(3) of this section is not changed in the following year, the owner or operator may submit a statement to that effect.

(d) If the total annual benzene quantity from facility waste is equal to or greater than 10 Mg/yr (11 ton/yr), then the owner or operator shall submit to the Administrator the following reports:

(1) Within 90 days after January 7, 1993, unless a waiver of compliance under §61.11 of this part is granted, or by the date of initial startup for a new source with an initial startup after the effective date, a certification that the equipment necessary to comply with these standards has been installed and that the required initial inspections or tests have been carried out in accordance with this subpart. If a waiver of compliance is granted under §61.11, the certification of equipment necessary to comply with these standards shall be submitted by the date the waiver of compliance expires.

(2) Beginning on the date that the equipment necessary to comply with these standards has been certified in accordance with paragraph (d)(1) of this section, the owner or operator shall submit annually to the Administrator a report that updates the information listed in paragraphs (a)(1) through (a)(3) of this section. If the information in the annual report required by paragraphs (a)(1) through (a)(3) of this section is not changed in the following year, the owner or operator may submit a statement to that effect.

(3) If an owner or operator elects to comply with the requirements of §61.342(c)(3)(ii), then the report required by paragraph (d)(2) of this section shall include a table identifying each waste stream chosen for exemption and the total annual benzene quantity in these exempted streams.

(4) If an owner or operator elects to comply with the alternative requirements of §61.342(d) of this subpart, then he shall include in the report required by paragraph (d)(2) of this section a table presenting the following information for each process wastewater stream:

(i) Whether or not the process wastewater stream is being controlled for benzene emissions in accordance with the requirements of this subpart;

(ii) For each process wastewater stream identified as not being controlled for benzene emissions in accordance with the requirements of this subpart, the table shall report the following information for the process wastewater stream as determined at the point of waste generation: annual waste quantity, range of benzene concentrations, annual average flow-weighted benzene concentration, and annual benzene quantity;

(iii) For each process wastewater stream identified as being controlled for benzene emissions in accordance with the requirements of this subpart, the table shall report the following information for the process wastewater stream as determined at the exit to the treatment process: Annual waste quantity, range of benzene concentrations, annual average flow-weighted benzene concentration, and annual benzene quantity.

(5) If an owner or operator elects to comply with the alternative requirements of §61.342(e), then the report required by paragraph (d)(2) of this section shall include a table presenting the following information for each waste stream:

(i) For each waste stream identified as not being controlled for benzene emissions in accordance with the requirements of this subpart; the table shall report the following information for the waste stream as determined at the point of waste generation: annual waste quantity, range of benzene concentrations, annual average flow-weighted benzene concentration, and annual benzene quantity;

(ii) For each waste stream identified as being controlled for benzene emissions in accordance with the requirements of this subpart; the table shall report the following information for the waste stream as determined at the applicable location described in §61.355(k)(2): Annual waste quantity, range of benzene concentrations, annual average flow-weighted benzene concentration, and annual benzene quantity.

(6) Beginning 3 months after the date that the equipment necessary to comply with these standards has been certified in accordance with paragraph (d)(1) of this section, the owner or operator shall submit quarterly to the Administrator a certification that all of the required inspections have been carried out in accordance with the requirements of this subpart.

(7) Beginning 3 months after the date that the equipment necessary to comply with these standards has been certified in accordance with paragraph (d)(1) of this section, the owner or operator shall submit a report quarterly to the Administrator that includes:

(i) If a treatment process or wastewater treatment system unit is monitored in accordance with §61.354(a)(1) of this subpart, then each period of operation during which the concentration of benzene in the monitored waste stream exiting the unit is equal to or greater than 10 ppmw.

(ii) If a treatment process or wastewater treatment system unit is monitored in accordance with §61.354(a)(2) of this subpart, then each 3-hour period of operation during which the average value of the monitored parameter is outside the range of acceptable values or during which the unit is not operating as designed.

(iii) If a treatment process or wastewater treatment system unit is monitored in accordance with §61.354(b), then each period of operation during which the flow-weighted annual average concentration of benzene in the monitored waste stream entering the unit is equal to or greater than 10 ppmw and/or the total annual benzene quantity is equal to or greater than 1.0 mg/yr.

(iv) For a control device monitored in accordance with §61.354(c) of this subpart, each period of operation monitored during which any of the following conditions occur, as applicable to the control device:

(A) Each 3-hour period of operation during which the average temperature of the gas stream in the combustion zone of a thermal vapor incinerator, as measured by the temperature monitoring device, is more than 28 °C (50 °F) below the design combustion zone temperature.

(B) Each 3-hour period of operation during which the average temperature of the gas stream immediately before the catalyst bed of a catalytic vapor incinerator, as measured by the temperature monitoring device, is more than 28 °C (50 °F) below the design gas stream temperature, and any 3-hour period during which the average temperature difference across the catalyst bed (i.e., the difference between the temperatures of the gas stream immediately before and after the catalyst bed), as measured by the temperature monitoring device, is less than 80 percent of the design temperature difference.

(C) Each 3-hour period of operation during which the average temperature of the gas stream in the combustion zone of a boiler or process heater having a design heat input capacity less than 44 MW (150 × 106 BTU/hr), as mesured by the temperature monitoring device, is more than 28 °C (50 °F) below the design combustion zone temperature.

(D) Each 3-hour period of operation during which the average concentration of organics or the average concentration of benzene in the exhaust gases from a carbon adsorber, condenser, or other vapor recovery system is more than 20 percent greater than the design concentration level of organics or benzene in the exhaust gas.

(E) Each 3-hour period of operation during which the temperature of the condenser exhaust vent stream is more than 6 °C (11 °F) above the design average exhaust vent stream temperature, or the temperature of the coolant fluid exiting the condenser is more than 6 °C (11 °F) above the design average coolant fluid temperature at the condenser outlet.

(F) Each period in which the pilot flame of a flare is absent.

(G) Each occurrence when there is a change in the location at which the vent stream is introduced into the flame zone of a boiler or process heater as required by §61.349(a)(2)(i)(C) of this subpart.

(H) Each occurrence when the carbon in a carbon adsorber system that is regenerated directly on site in the control device is not regenerated at the predetermined carbon bed regeneration time.

(I) Each occurrence when the carbon in a carbon adsorber system that is not regenerated directly on site in the control device is not replaced at the predetermined interval specified in §61.354(c) of this subpart.

(J) Each 3-hour period of operation during which the parameters monitored are outside the range of values specified in §61.349(a)(2)(iv)(C), or any other periods specified by the Administrator for a control device subject to the requirements of §61.349(a)(2)(iv).

(v) For a cover and closed-vent system monitored in accordance with §61.354(g), the owner or operator shall submit a report quarterly to the Administrator that identifies any period in which the pressure in the waste management unit is equal to or greater than atmospheric pressure.

(8) Beginning one year after the date that the equipment necessary to comply with these standards has been certified in accordance with paragraph (d)(1) of this section, the owner or operator shall submit annually to the Administrator a report that summarizes all inspections required by §§61.342 through 61.354 during which detectable emissions are measured or a problem (such as a broken seal, gap or other problem) that could result in benzone emissions is identified, including information about the repairs or corrective action taken.

(e) An owner or operator electing to comply with the provisions of §§61.351 or 61.352 of this subpart shall notify the Administrator of the alternative standard selected in the report required under §61.07 or §61.10 of this part.

(f) An owner or operator who elects to install and operate the control equipment in §61.351 of this subpart shall comply with the reporting requirements in 40 CFR 60.115b.

(g) An owner or operator who elects to install and operate the control equipment in §61.352 of this subpart shall submit initial and quarterly reports that identify all seal gap measurements, as required in 40 CFR 60.693–2(a), that are outside the prescribed limits.

[55 FR 8346, Mar. 7 1990; 55 FR 12444, Apr. 3, 1990, as amended at 55 FR 37231, Sept. 10, 1990; 58 FR 3105, Jan. 7, 1993; 65 FR 62161, Oct. 17, 2000]

§ 61.358 Delegation of authority.

(a) In delegating implementation and enforcement authority to a State under section 112(d) of the Clean Air Act, the authorities contained in paragraph (b) of this section shall be retained by the Administrator and not transferred to a State.

(b) Alternative means of emission limitation under §61.353 of this subpart will not be delegated to States.

§ 61.359 [Reserved]

Appendix A to Part 61

APPENDIX A

National Emission Standards for Hazardous Air Pollutants

Compliance Status Information

I. SOURCE REPORT

INSTRUCTIONS: Owners or operators of sources of hazardous pollutants subject to the National Emission Standards for Hazardous Air Pollutants are required to submit the information contained in Section I to the appropriate U.S. Environmental Protection Agency Regional Office prior to 90 days after the effective date of any standards or amendments which require the submission of such information.

A list of regional offices is provided in §61.04.

A. SOURCE INFORMATION

1. Identification/Location - Indicate the name and address of each source.

1 2 Region | 3 4 State | 5 8 County | 9 13 Source Number | 0 0 0 14 16 | 0 0 17 18 | 1 19

20 22 AQCR # | 23 26 City Code | 27 Source Name 46

47 Street Address (Location of Plant) 66 | 80

Dup 1-18 | 19 | 20 City Name 34 | State 35 39

40 State Regis. Number 54 | 55 58 NEDS X Ref.

59 SIC 62 | FF 64 | 8 A/P 65 | 77 79 Staff | 80

Dup 1-18 | 5 19 | CS 30 | STP 31 | EC 49 | 80

2. Contact - Indicate the name and telephone number of the owner or operator or other responsible official whom EPA may contact concerning this report.

View or download PDF

Dup 1-18 4 1 19 20 21 Name 43

44 46 Area Code 47 - Number 54 80

3. Source Description - Briefly state the nature of the source (e.g., "Chlor-alkali Plant" or "Machine Shop").

Dup 1-18 4 2 19 20 21 Description 50

51 Continued 79 80

4. Alternative Mailing Address - Indicate an alternative mailing address if correspondence is to be directed to a location different than that specified above.

Dup 1-18 4 3 19 20 21 Number Street or Box Number 45 80

Dup 1-18 4 4 19 20 21 City 35 37 38 State 41 Zip 44 80

5. Compliance Status - The emissions from this source ___ can ___ cannot meet the emission limitations contained in the National Emission Standards on or prior to 90 days after the effective date of any standards or amendments which require the submission of such information.

Signature of Owner, Operator or Other Responsible Official

NOTE: If the emissions from the source will exceed those limits set by the National Emission Standards for Hazardous Air Pollutants, the source will be in violation and subject to Federal enforcement actions unless granted a waiver of compliance by the Administrator of the U.S. Environmental Protection Agency. The information needed for such waivers is listed in Section II of this form.

B. PROCESS INFORMATION. Part B should be completed separately for each point of emission for each hazardous pollutant. [Sources subject to 61.22(1) may omit number 4. below.]

Dup 1-13 14 16 0 0 17 18 5 19 20 SCC 27 28 29 NEDS X Ref 30 LS 31 SIP

View or download PDF

1. Pollutant Emitted - Indicate the type of hazardous pollutant emitted by the process. Indicate "AB" for asbestos, "BE" for beryllium, or "HG" for mercury.

32 33 Pollutant 34 Regulation 48 49 EC

2. Process Description - Provide a brief description of each process (e.g., "hydrogen end box" in a mercury chlor-alkali plant, "grinding machine" in a beryllium machine shop). Use additional sheets if necessary.

50 Process Description 74 80

Dup 1-18 6 1 19 20 21 50

51 79 80

Dup 1-18 6 2 19 20 21 50

51 79 80

3. Amount of Pollutant - Indicate the average weight of the hazardous material named in Item 1 which enters the process in pounds per month (based on the previous twelve months of operation).

Dup 1-18 6 3 19 20 21 27 lbs./mo. 29 36 80

4. Control Devices
a. Indicate the type of pollution control devices, if any, used to reduce the emissions from the process (e.g., venturi scrubber, baghouse, wet cyclone) and the estimated percent of the pollutant which the device removes from the process gas stream.

Dup 1-18 6 4 19 20 21 PRIMARY CONTROL DEVICE: 43

45 Primary Device Name 64 66 70 Percent Removal Efficiency 72 79

80

View or download PDF

Dup 1-18 6 5 SECONDARY CONTROL DEVICES:
19 20 21 45

47 Secondary Device Name 64 65 Percent Removal Efficiency 70 % EFFIC. 72 79 80

b. Asbestos Emission Control Devices Only

i. If a baghouse is specified in Item 4a, give the following information:

- The air flow permeability in cubic feet per minute per square foot of fabric area.

  Air flow permeability = _____ cfm/ft^2

- The pressure drop in inches water gauge across the filter at which the baghouse is operated.

  Operating pressure drop = _____ inches w.g.

- If the baghouse material contains synthetic fill yarn, check whether this material is / / spun / / or not spun.

- If the baghouse utilizes a felted fabric, give the minimum thickness in inches and the density in ounces per square yard.

  Thickness = _____ inches Density = _____ oz/yd^2

ii. If a wet collection device is specified in Item 4a, give the designed unit contacting energy in inches water gauge.

- Unit contacting energy = _____ inches w.g.

C. DISPOSAL OF ASBESTOS-CONTAINING WASTES. Part C should be completed separately for each asbestos-containing waste generation operation arising from sources subject to §61.22(a), (c), (e), and (h).

Dup 1-13 0 0 5
14 16 17 18 19 20 SCC 27 28 29 NEDS X Ref 30 CS 31 SIP

A B
32 33 Pollutant 34 Regulation 48 49 EC

View or download PDF

1. Waste Generation - Provide a brief description of each process that generates asbestos-containing waste (e.g. disposal of control device wastes).

50 Process Description 79 80

2. Asbestos Concentration - Indicate the average percentage asbestos content of these materials.

Dup 1-18 6 1 ASBESTOS CONCENTRATION:
19 20 21 43 45 48

% 50 80

3. Amount of Wastes - Indicate the average weight of asbestos-containing wastes disposed of, measured in kg/day.

Dup 1-18 6 2 kg/day
19 20 21 27 29 34 80

4. Control Methods - Indicate the emission control methods used in all stages of waste disposal, from collection, processing, and packaging to transporting and deposition.

Dup 1-18 6 3 Primary Control Method
19 20 21 43

45 79 80

Dup 1-18 6 4
19 20 21 50

51 79 80

5. Waste Disposal - Indicate the type of disposal site (sanitary landfill, open, covered) or incineration site (municipal, private) where the waste is disposed of and who operates the site (company, private, municipal). State the name and location of the site (closest city or town, county, state).

Dup 1-18 6 5 TYPE OF SITE:
19 20 21 33 35 50

51 79 80

View or download PDF

```
Dup 1-18   6 6          OPERATOR:
           19 20        21          29    31                    50

51                                                   79    80

Dup 1-18   6 7          LOCATION:
           19 20        21          29

31                                                           70

71                                   79    80
```

D. WASTE DISPOSAL SITES. Part D should be completed separately for each asbestos waste disposal site subject to section 61.22(1).

```
Dup 1-13                 0 0    5
           14    16     17 18  19 20        SCC        27 28   29     30    31
                                                         NEDS X Ref  CS    SIP

  A B
 32 33   34    Regulation          48    49
Pollutant                            EC

                WASTE DISPOSAL SITE
50                                   68    80
```

1. Description - Provide a brief description of the site, including its size and configuration, and the distance to the closest city or town, closest residence, and closest primary road.

```
Dup 1-18   6 1          SITE DESCRIPTION
           19 20   21                    37   39                    50

51                                                   79    80

Dup 1-18   6 2     DISTANCE:        TOWN:                    K M
           19 20 21          29 30          34    36          40  42 43

      RESIDENCE:                          K M        ROAD:
45                   54   56        60  62 63   65        69    71        75

 K M
77 78    80
```

View or download PDF

2. Inactivation - After the site is inactivated, indicate the method or methods used to comply with the standard and send a list of the actions that will be undertaken to maintain the inactivated site.

```
                                          COMPLIANCE
Dup 1-18   6 8                 METHOD/INACTIVE SITE:
           19 20   21                                          52

54                                                   79    80
```

View or download PDF

II. Waiver Requests

A. *Waiver of Compliance.* Owners or operators of sources unable to operate in compliance with the National Emission Standards for Hazardous Air Pollutants prior to 90 days after the effective date of any standards or amendments which require the submission of such information may request a waiver of compliance from the Administrator of the U.S. Environmental Protection Agency for the time period necessary to install appropriate control devices or make modifications to achieve compliance. The Administrator may grant a waiver of compliance with the standard for a period not exceeding two years from the effective date of the hazardous pollutant standards, if he finds that such period is necessary for the installation of controls and that steps will be taken during the period of the waiver to assure that the health of persons will be protected from imminent endangerment.

The report information provided in Section I must accompany this application. Applications should be sent to the appropriate EPA regional office.

1. *Processes Involved* —Indicate the process or processes emitting hazardous pollutants to which emission controls are to be applied.

2. *Controls*

a. Describe the proposed type of control device to be added or modification to be made to the process to reduce the emission of hazardous pollutants to an acceptable level. (Use additional sheets if necessary.)

b. Describe the measures that will be taken during the waiver period to assure that the health of persons will be protected from imminent endangerment. (Use additional sheets if necessary.)

3. *Increments of Progress* —Specify the dates by which the following increments of progress will be met.

Date by which contracts for emission control systems or process modifications will be awarded; or date by which orders will be issued for the purchase of the component parts to accomplish emission control or process modification.

```
Dup 1-16      0 1 7
              17  19   53 54   55          60  61  MO/DY/YR    66  80

     Date of initiation of on-site construction or installation of
     emission control equipment or process change.

Dup 1-16      0 2 7
              17  19   53 54   55          60  61  MO/DY/YR    66  80

     Date by which on-site construction or installation of emission control
     equipment or process modification is to be completed.

Dup 1-16      0 3 7
              17  19   53 54   55          60  61  MO/DY/YR    66  80

     Date by which final compliance is to be achieved.

Dup 1-16      0 4 7
              17  19   53 54   55          60  61  MO/DY/YR    66  80
```

View or download PDF

B. *Waiver of Emission Tests.* A waiver of emission testing may be granted to owners or operators of sources subject to emmission testing if, in the judgment of the Administrator of the Environmental Protection Agency the emissions from the source comply with the appropriate standard or if the owners or operators of the source have requested a waiver of compliance or have been granted a waiver of compliance.

This application should accompany the report information provided in Section I.

1. *Reason* —State the reasons for requesting a waiver of emission testing. If the reason stated is that the emissions from the source are within the prescribed limits, documentation of this condition must be attached.

_____

_____

DateSignature of the owner or operator

(Sec. 114, of the Clean Air Act as amended (42 U.S.C. 7414))

[40 FR 48303, Oct. 14, 1975, as amended at 43 FR 8800, Mar. 3, 1978; 50 FR 46295, Sept. 9, 1985]

Appendix B to Part 61—Test Methods

Method 101—Determination of particulate and gaseous mercury emissions from chlor-alkali plants (air streams)

Method 101A—Determination of particulate and gaseous mercury emissions from sewage sludge incinerators

Method 102—Determination of particulate and gaseous mercury emissions from chlor-alkali plants (hydrogen streams)

Method 103—Beryllium screening method

Method 104—Determination of beryllium emissions from stationary sources

Method 105—Determination of mercury in wastewater treatment plant sewage sludges

Method 106—Determination of vinyl chloride emissions from stationary sources

Method 107—Determination of vinyl chloride content of in-process wastewater samples, and vinyl chloride content of polyvinyl chloride resin slurry, wet cake, and latex samples

Method 107A—Determination of vinyl chloride content of solvents, resin-solvent solution, polyvinyl chloride resin, resin slurry, wet resin, and latex samples

Method 108—Determination of particulate and gaseous arsenic emissions

Method 108A—Determination of arsenic content in ore samples from nonferrous smelters

Method 108B—Determination of arsenic content in ore samples from nonferrous smelters

Method 108C—Determination of arsenic content in ore samples from nonferrous smelters (molybdenum blue photometric procedure)

Method 111—Determination of Polonium—210 emissions from stationary sources

Method 101—Determination of Particulate and Gaseous Mercury Emissions From Chlor-Alkali Plants (Air Streams)

Note: This method does not include all of the specifications (*e.g.,* equipment and supplies) and procedures (*e.g.,* sampling and analytical) essential to its performance. Some material is incorporated by reference from methods in appendix A to 40 CFR part 60. Therefore, to obtain reliable results, persons using this method should have a thorough knowledge of at least the following additional test methods: Method 1, Method 2, Method 3, and Method 5.

1.0 Scope and Application

1.1 Analytes.

Analyte	CAS No.	Sensitivity
Mercury (Hg)	7439–97–6	Dependent upon recorder and spectrophotometer.

1.2 Applicability. This method is applicable for the determination of Hg emissions, including both particulate and gaseous Hg, from chlor-alkali plants and other sources (as specified in the regulations) where the carrier-gas stream in the duct or stack is principally air.

1.3 Data Quality Objectives. Adherence to the requirements of this method will enhance the quality of the data obtained from air pollutant sampling methods.

2.0 Summary of Method

Particulate and gaseous Hg emissions are withdrawn isokinetically from the source and collected in acidic iodine monochloride (ICl) solution. The Hg collected (in the mercuric form) is reduced to elemental Hg, which is then aerated from the solution into an optical cell and measured by atomic absorption spectrophotometry.

3.0 Definitions[Reserved]

4.0 Interferences

4.1 Sample Collection. Sulfur dioxide (SO_2) reduces ICl and causes premature depletion of the ICl solution.

4.2 Sample Analysis.

4.2.1 ICl concentrations greater than 10^{-4}molar inhibit the reduction of the Hg (II) ion in the aeration cell.

4.2.2 Condensation of water vapor on the optical cell windows causes a positive interference.

5.0 Safety

5.1 Disclaimer. This method may involve hazardous materials, operations, and equipment. This test method does not purport to address all of the safety problems associated with its use. It is the responsibility of the user of this test method to establish appropriate safety and health practices and determine the applicability of regulatory limitations prior to performing this test method.

5.2 Corrosive Reagents. The following reagents are hazardous. Personal protective equipment and safe procedures are useful in preventing chemical splashes. If contact occurs, immediately flush with copious amounts of water for at least 15 minutes. Remove clothing under shower and decontaminate. Treat residual chemical burn as thermal burn.

5.2.1 Hydrochloric Acid (HCl). Highly toxic and corrosive. Causes severe damage to tissues. Vapors are highly irritating to eyes, skin, nose, and lungs, causing severe damage. May cause bronchitis, pneumonia, or edema of lungs. Exposure to concentrations of 0.13 to 0.2 percent can be lethal to humans in a few minutes. Provide ventilation to limit exposure. Reacts with metals, producing hydrogen gas.

5.2.2 Nitric Acid (HNO_3). Highly corrosive to eyes, skin, nose, and lungs. Vapors cause bronchitis, pneumonia, or edema of lungs. Reaction to inhalation may be delayed as long as 30 hours and still be fatal. Provide ventilation to limit exposure. Strong oxidizer. Hazardous reaction may occur with organic materials such as solvents.

5.2.3 Sulfuric Acid (H_2SO_4). Rapidly destructive to body tissue. Will cause third degree burns. Eye damage may result in blindness. Inhalation may be fatal from spasm of the larynx, usually within 30 minutes. 3 mg/m^3 will cause lung damage. 1 mg/m^3 for 8 hours will cause lung damage or, in higher concentrations, death. Provide ventilation to limit inhalation. Reacts violently with metals and organics.

6.0 Equipment and Supplies.

6.1 Sample Collection. A schematic of the sampling train used in performing this method is shown in Figure 101–1; it is similar to the Method 5 sampling train. The following items are required for sample collection:

6.1.1 Probe Nozzle, Pitot Tube, Differential Pressure Gauge, Metering System, Barometer, and Gas Density Determination Equipment. Same as Method 5, Sections 6.1.1.1, 6.1.1.3, 6.1.1.4, 6.1.1.9, 6.1.2, and 6.1.3, respectively.

6.1.2 Probe Liner. Borosilicate or quartz glass tubing. A heating system capable of maintaining a gas temperature of 120 ±14 °C (248 ±25 °F) at the probe exit during sampling may be used to prevent water condensation.

Note: Do not use metal probe liners.

6.1.3 Impingers. Four Greenburg-Smith impingers connected in series with leak-free ground glass fittings or any similar leak-free noncontaminating fittings. For the first, third, and fourth impingers, impingers that are

modified by replacing the tip with a 13-mm ID (0.5-in.) glass tube extending to 13 mm (0.5 in.) from the bottom of the flask may be used.

6.1.4 Acid Trap. Mine Safety Appliances air line filter, Catalog number 81857, with acid absorbing cartridge and suitable connections, or equivalent.

6.2 Sample Recovery. The following items are needed for sample recovery:

6.2.1 Glass Sample Bottles. Leakless, with Teflon-lined caps, 1000- and 100-ml.

6.2.2 Graduated Cylinder. 250-ml.

6.2.3 Funnel and Rubber Policeman. To aid in transfer of silica gel to container; not necessary if silica gel is weighed in the field.

6.2.4 Funnel. Glass, to aid in sample recovery.

6.3 Sample Preparation and Analysis. The following items are needed for sample preparation and analysis:

6.3.1 Atomic Absorption Spectrophotometer. Perkin-Elmer 303, or equivalent, containing a hollow-cathode mercury lamp and the optical cell described in Section 6.3.2.

6.3.2 Optical Cell. Cylindrical shape with quartz end windows and having the dimensions shown in Figure 101–2. Wind the cell with approximately 2 meters (6 ft) of 24-gauge Nichrome wire, or equivalent, and wrap with fiberglass insulation tape, or equivalent; do not let the wires touch each other.

6.3.3 Aeration Cell. Constructed according to the specifications in Figure 101–3. Do not use a glass frit as a substitute for the blown glass bubbler tip shown in Figure 101–3.

6.3.4 Recorder. Matched to output of the spectrophotometer described in Section 6.3.1.

6.3.5 Variable Transformer. To vary the voltage on the optical cell from 0 to 40 volts.

6.3.6 Hood. For venting optical cell exhaust.

6.3.7 Flow Metering Valve.

6.3.8 Rate Meter. Rotameter, or equivalent, capable of measuring to within 2 percent a gas flow of 1.5 liters/min (0.053 cfm).

6.3.9 Aeration Gas Cylinder. Nitrogen or dry, Hg-free air, equipped with a single-stage regulator.

6.3.10 Tubing. For making connections. Use glass tubing (ungreased ball and socket connections are recommended) for all tubing connections between the solution cell and the optical cell; do not use Tygon tubing, other types of flexible tubing, or metal tubing as substitutes. Teflon, steel, or copper tubing may be used between the nitrogen tank and flow metering valve (Section 6.3.7), and Tygon, gum, or rubber tubing between the flow metering valve and the aeration cell.

6.3.11 Flow Rate Calibration Equipment. Bubble flow meter or wet-test meter for measuring a gas flow rate of 1.5 ±0.1 liters/min (0.053 ±0.0035 cfm).

6.3.12 Volumetric Flasks. Class A with penny head standard taper stoppers; 100-, 250-, 500-, and 1000-ml.

6.3.13 Volumetric Pipets. Class A; 1-, 2-, 3-, 4-, and 5-ml.

6.3.14 Graduated Cylinder. 50-ml.

6.3.15 Magnetic Stirrer. General-purpose laboratory type.

6.3.16 Magnetic Stirring Bar. Teflon-coated.

6.3.17 Balance. Capable of weighing to ±0.5 g.

6.3.18 Alternative Analytical Apparatus. Alternative systems are allowable as long as they meet the following criteria:

6.3.18.1 A linear calibration curve is generated and two consecutive samples of the same aliquot size and concentration agree within 3 percent of their average.

6.3.18.2 A minimum of 95 percent of the spike is recovered when an aliquot of a source sample is spiked with a known concentration of Hg (II) compound.

6.3.18.3 The reducing agent should be added after the aeration cell is closed.

6.3.18.4 The aeration bottle bubbler should not contain a frit.

6.3.18.5 Any Tygon tubing used should be as short as possible and conditioned prior to use until blanks and standards yield linear and reproducible results.

6.3.18.6 If manual stirring is done before aeration, it should be done with the aeration cell closed.

6.3.18.7 A drying tube should not be used unless it is conditioned as the Tygon tubing above.

7.0 Reagents and Standards

Unless otherwise indicated, all reagents must conform to the specifications established by the Committee on Analytical Reagents of the American Chemical Society; where such specifications are not available, use the best available grade.

7.1 Sample Collection. The following reagents are required for sample collection:

7.1.1 Water. Deionized distilled, to conform to ASTM D 1193–77 or 91 (incorporated by reference—see §61.18), Type 1. If high concentrations of organic matter are not expected to be present, the analyst may eliminate the $KMnO_4$test for oxidizable organic matter. Use this water in all dilutions and solution preparations.

7.1.2 Nitric Acid, 50 Percent (v/v). Mix equal volumes of concentrated $HNO_3$and water, being careful to add the acid to the water slowly.

7.1.3 Silica Gel. Indicating type, 6- to 16-mesh. If previously used, dry at 175 °C (350 °F) for 2 hours. The tester may use new silica gel as received.

7.1.4 Potassium Iodide (KI) Solution, 25 Percent. Dissolve 250 g of KI in water, and dilute to 1 liter.

7.1.5 Iodine Monochloride Stock Solution, 1.0 M. To 800 ml of 25 percent KI solution, add 800 ml of concentrated HCl. Cool to room temperature. With vigorous stirring, slowly add 135 g of potassium iodate (KIO_3), and stir until all free iodine has dissolved. A clear orange-red solution occurs when all the KIO_3has been added. Cool to room temperature, and dilute to 1800 ml with water. Keep the solution in amber glass bottles to prevent degradation.

7.1.6 Absorbing Solution, 0.1 M ICl. Dilute 100 ml of the 1.0 M ICl stock solution to 1 liter with water. Keep the solution in amber glass bottles and in darkness to prevent degradation. This reagent is stable for at least two months.

7.2 Sample Preparation and Analysis. The following reagents and standards are required for sample preparation and analysis:

7.2.1 Reagents.

7.2.1.1 Tin (II) Solution. Prepare fresh daily, and keep sealed when not being used. Completely dissolve 20 g of tin (II) chloride (or 25 g of tin (II) sulfate) crystals (Baker Analyzed reagent grade or any other brand that will give a clear solution) in 25 ml of concentrated HCl. Dilute to 250 ml with water. Do not substitute HNO_3, H_2SO_4, or other strong acids for the HCl.

7.2.1.2 Sulfuric Acid, 5 Percent (v/v). Dilute 25 ml of concentrated $H_2SO_4$to 500 ml with water.

7.2.2 Standards

7.2.2.1 Hg Stock Solution, 1 mg Hg/ml. Prepare and store all Hg standard solutions in borosilicate glass containers. Completely dissolve 0.1354 g of Hg (II) chloride in 75 ml of water in a 100-ml glass volumetric flask. Add 10 ml of concentrated HNO_3, and adjust the volume to exactly 100 ml with water. Mix thoroughly. This solution is stable for at least one month.

7.2.2.2 Intermediate Hg Standard Solution, 10 µg Hg/ml. Prepare fresh weekly. Pipet 5.0 ml of the Hg stock solution (Section 7.2.2.1) into a 500-ml glass volumetric flask, and add 20 ml of the 5 percent H_2SO_4solution. Dilute to exactly 500 ml with water. Thoroughly mix the solution.

7.2.2.3 Working Hg Standard Solution, 200 ng Hg/ml. Prepare fresh daily. Pipet 5.0 ml of the intermediate Hg standard solution (Section 7.2.2.2) into a 250-ml volumetric glass flask. Add 10 ml of the 5 percent $H_2SO_4$and 2 ml of the 0.1 M ICl absorbing solution taken as a blank (Section 8.7.4.3), and dilute to 250 ml with water. Mix thoroughly.

8.0 Sample Collection, Preservation, Transport, and Storage

Because of the complexity of this method, testers should be trained and experienced with the test procedures to ensure reliable results. Since the amount of Hg that is collected generally is small, the method must be carefully applied to prevent contamination or loss of sample.

8.1 Pretest Preparation. Follow the general procedure outlined in Method 5, Section 8.1, except omit Sections 8.1.2 and 8.1.3.

8.2 Preliminary Determinations. Follow the general procedure outlined in Method 5, Section 8.2, with the exception of the following:

8.2.1 Select a nozzle size based on the range of velocity heads to assure that it is not necessary to change the nozzle size in order to maintain isokinetic sampling rates below 28 liters/min (1.0 cfm).

8.2.2 Perform test runs such that samples are obtained over a period or periods that accurately determine the maximum emissions that occur in a 24-hour period. In the case of cyclic operations, run sufficient tests for the accurate determination of the emissions that occur over the duration of the cycle. A minimum sample time of 2 hours is recommended. In some instances, high Hg or high SO_2concentrations make it impossible to sample for the desired minimum time. This is indicated by reddening (liberation of free iodine) in the first impinger. In these cases, the sample run may be divided into two or more subruns to ensure that the absorbing solution is not depleted.

8.3 Preparation of Sampling Train.

8.3.1 Clean all glassware (probe, impingers, and connectors) by rinsing with 50 percent HNO_3, tap water, 0.1 M ICl, tap water, and finally deionized distilled water. Place 100 ml of 0.1 M ICl in each of the first three impingers. Take care to prevent the absorbing solution from contacting any greased surfaces. Place approximately 200 g of preweighed silica gel in the fourth impinger. More silica gel may be used, but care should be taken to ensure that it is not entrained and carried out from the impinger during sampling. Place the silica gel container in a clean place for later use in the sample recovery. Alternatively, determine and record the weight of the silica gel plus impinger to the nearest 0.5 g.

8.3.2 Install the selected nozzle using a Viton A O-ring when stack temperatures are less than 260 °C (500 °F). Use a fiberglass string gasket if temperatures are higher. See APTD–0576 (Reference 3 in Method 5) for details. Other connecting systems using either 316 stainless steel or Teflon ferrules may be used. Mark the probe with heat-resistant tape or by some other method to denote the proper distance into the stack or duct for each sampling point.

8.3.3 Assemble the train as shown in Figure 101–1, using (if necessary) a very light coat of silicone grease on all ground glass joints. Grease only the outer portion (see APTD–0576) to avoid the possibility of contamination by the silicone grease.

Note: An empty impinger may be inserted between the third impinger and the silica gel to remove excess moisture from the sample stream.

8.3.4 After the sampling train has been assembled, turn on and set the probe heating system, if applicable, at the desired operating temperature. Allow time for the temperatures to stabilize. Place crushed ice around the impingers.

8.4 Leak-Check Procedures. Follow the leak-check procedures outlined in Method 5, Section 8.4.

8.5 Sampling Train Operation. Follow the general procedure outlined in Method 5, Section 8.5. For each run, record the data required on a data sheet such as the one shown in Figure 101–4.

8.6 Calculation of Percent Isokinetic. Same as Method 5, Section 8.6.

8.7 Sample Recovery. Begin proper cleanup procedure as soon as the probe is removed from the stack at the end of the sampling period.

8.7.1 Allow the probe to cool. When it can be safely handled, wipe off any external particulate matter near the tip of the probe nozzle, and place a cap over it. Do not cap off the probe tip tightly while the sampling train is cooling. Capping would create a vacuum and draw liquid out from the impingers.

8.7.2 Before moving the sampling train to the cleanup site, remove the probe from the train, wipe off the silicone grease, and cap the open outlet of the probe. Be careful not to lose any condensate that might be present. Wipe off the silicone grease from the impinger. Use either ground-glass stoppers, plastic caps, or serum caps to close these openings.

8.7.3 Transfer the probe and impinger assembly to a cleanup area that is clean, protected from the wind, and free of Hg contamination. The ambient air in laboratories located in the immediate vicinity of Hg-using facilities is not normally free of Hg contamination.

8.7.4 Inspect the train before and during disassembly, and note any abnormal conditions. Treat the samples as follows.

8.7.4.1 Container No. 1 (Impingers and Probe).

8.7.4.1.1 Using a graduated cylinder, measure the liquid in the first three impingers to within 1 ml. Record the volume of liquid present (*e.g.,* see Figure 5–6 of Method 5). This information is needed to calculate the moisture content of the effluent gas. (Use only glass storage bottles and graduated cylinders that have been

precleaned as in Section 8.3.1) Place the contents of the first three impingers into a 1000-ml glass sample bottle.

8.7.4.1.2 Taking care that dust on the outside of the probe or other exterior surfaces does not get into the sample, quantitatively recover the Hg (and any condensate) from the probe nozzle, probe fitting, and probe liner as follows: Rinse these components with two 50-ml portions of 0.1 M ICl. Next, rinse the probe nozzle, fitting and liner, and each piece of connecting glassware between the probe liner and the back half of the third impinger with a maximum of 400 ml of water. Add all washings to the 1000-ml glass sample bottle containing the liquid from the first three impingers.

8.7.4.1.3 After all washings have been collected in the sample container, tighten the lid on the container to prevent leakage during shipment to the laboratory. Mark the height of the liquid to determine later whether leakage occurred during transport. Label the container to identify clearly its contents.

8.7.4.2 Container No. 2 (Silica Gel). Same as Method 5, Section 8.7.6.3.

8.7.4.3 Container No. 3 (Absorbing Solution Blank). Place 50 ml of the 0.1 M ICl absorbing solution in a 100-ml sample bottle. Seal the container. Use this blank to prepare the working Hg standard solution (Section 7.2.2.3).

9.0 Quality Control

9.1 Miscellaneous Quality Control Measures.

Section	Quality control measure	Effect
8.4 10.2	Sampling equipment leak-checks and calibration	Ensure accuracy and precision of sampling measurements.
10.5, 10.6	Spectrophotometer calibration	Ensure linearity of spectrophotometer response to standards.
11.3.3	Check for matrix effects	Eliminate matrix effects.

9.2 Volume Metering System Checks. Same as Method 5, Section 9.2.

10.0 Calibration and Standardizations

Note: Maintain a laboratory log of all calibrations.

10.1 Before use, clean all glassware, both new and used, as follows: brush with soap and tap water, liberally rinse with tap water, soak for 1 hour in 50 percent HNO_3, and then rinse with deionized distilled water.

10.2 Sampling Equipment. Calibrate the sampling equipment according to the procedures outlined in the following sections of Method 5: Section 10.1 (Probe Nozzle), Section 10.2 (Pitot Tube Assembly), Section 10.3 (Metering System), Section 10.5 (Temperature Sensors), Section 10.6 (Barometer).

10.3 Aeration System Flow Rate Meter. Assemble the aeration system as shown in Figure 101–5. Set the outlet pressure on the aeration gas cylinder regulator to a minimum pressure of 500 mm Hg (10 psi), and use the flow metering valve and a bubble flowmeter or wet-test meter to obtain a flow rate of 1.5 ±0.1 liters/min (0.053 ±0.0035 cfm) through the aeration cell. After the calibration of the aeration system flow rate meter is complete, remove the bubble flowmeter from the system.

10.4 Optical Cell Heating System. Using a 50-ml graduated cylinder, add 50 ml of water to the bottle section of the aeration cell, and attach the bottle section to the bubbler section of the cell. Attach the aeration cell to the optical cell and while aerating at 1.5 ±0.1 liters/min (0.053 ±0.0035 cfm), determine the minimum variable transformer setting necessary to prevent condensation of moisture in the optical cell and in the connecting tubing. (This setting should not exceed 20 volts.)

10.5 Spectrophotometer and Recorder.

10.5.1 The Hg response may be measured by either peak height or peak area.

Note: The temperature of the solution affects the rate at which elemental Hg is released from a solution and, consequently, it affects the shape of the absorption curve (area) and the point of maximum absorbance (peak height). Therefore, to obtain reproducible results, bring all solutions to room temperature before use.

10.5.2 Set the spectrophotometer wavelength at 253.7 nm, and make certain the optical cell is at the minimum temperature that will prevent water condensation. Then set the recorder scale as follows: Using a 50-ml graduated cylinder, add 50 ml of water to the aeration cell bottle. Add three drops of Antifoam B to the bottle, and then pipet 5.0 ml of the working Hg standard solution into the aeration cell.

Note: Always add the Hg-containing solution to the aeration cell after the 50 ml of water.

10.5.3 Place a Teflon-coated stirring bar in the bottle. Before attaching the bottle section to the bubbler section of the aeration cell, make certain that (1) the aeration cell exit arm stopcock (Figure 101–3) is closed (so that Hg will not prematurely enter the optical cell when the reducing agent is being added) and (2) there is no flow through the bubbler. If conditions (1) and (2) are met, attach the bottle section to the bubbler section of the aeration cell. Pipet 5 ml of tin (II) reducing solution into the aeration cell through the side arm, and immediately stopper the side arm. Stir the solution for 15 seconds, turn on the recorder, open the aeration cell exit arm stopcock, and immediately initiate aeration with continued stirring. Determine the maximum absorbance of the standard, and set this value to read 90 percent of the recorder full scale.

10.6 Calibration Curve.

10.6.1 After setting the recorder scale, repeat the procedure in Section 10.5 using 0.0-, 1.0-, 2.0-, 3.0-, 4.0-, and 5.0-ml aliquots of the working standard solution (final amount of Hg in the aeration cell is 0, 200, 400, 600, 800, and 1000 ng, respectively). Repeat this procedure on each aliquot size until two consecutive peaks agree within 3 percent of their average value.

Note: To prevent Hg carryover from one sample to another, do not close the aeration cell from the optical cell until the recorder pen has returned to the baseline.)

10.6.2 It should not be necessary to disconnect the aeration gas inlet line from the aeration cell when changing samples. After separating the bottle and bubbler sections of the aeration cell, place the bubbler section into a 600-ml beaker containing approximately 400 ml of water. Rinse the bottle section of the aeration cell with a stream of water to remove all traces of the tin (II) reducing agent. Also, to prevent the loss of Hg before aeration, remove all traces of the reducing agent between samples by washing with water. It will be necessary, however, to wash the aeration cell parts with concentrated HCl if any of the following conditions occur: (1) A white film appears on any inside surface of the aeration cell, (2) the calibration curve changes suddenly, or (3) the replicate samples do not yield reproducible results.

10.6.3 Subtract the average peak height (or peak area) of the blank (0.0-ml aliquot)—which must be less than 2 percent of recorder full scale—from the averaged peak heights of the 1.0-, 2.0-, 3.0-, 4.0-, and 5.0-ml aliquot standards. If the blank absorbance is greater than 2 percent of full-scale, the probable cause is Hg contamination of a reagent or carry-over of Hg from a previous sample. Prepare the calibration curve by plotting the corrected peak height of each standard solution versus the corresponding final total Hg weight in the aeration cell (in ng), and draw the best fit straight line. This line should either pass through the origin or pass through a point no further from the origin than ±2 percent of the recorder full scale. If the line does not

pass through or very near to the origin, check for nonlinearity of the curve and for incorrectly prepared standards.

11.0 Analytical Procedure

11.1 Sample Loss Check. Check the liquid level in each container to see whether liquid was lost during transport. If a noticeable amount of leakage occurred, either void the sample or use methods subject to the approval of the Administrator to account for the losses.

11.2 Sample Preparation. Treat each sample as follows:

11.2.1 Container No. 1 (Impingers and Probe). Carefully transfer the contents of Container No. 1 into a 1000-ml volumetric flask, and adjust the volume to exactly 1000 ml with water.

11.2.2 Dilutions. Pipet a 2-ml aliquot from the diluted sample from Section 11.2.1 into a 250-ml volumetric flask. Add 10 ml of 5 percent H_2SO_4, and adjust the volume to exactly 250 ml with water. This solution is stable for at least 72 hours.

Note: The dilution factor will be 250/2 for this solution.

11.3 Analysis. Calibrate the analytical equipment and develop a calibration curve as outlined in Sections 10.3 through 10.6.

11.3.1 Mercury Samples. Repeat the procedure used to establish the calibration curve with an appropriately sized aliquot (1 to 5 ml) of the diluted sample (from Section 11.2.2) until two consecutive peak heights agree within 3 percent of their average value. The peak maximum of an aliquot (except the 5-ml aliquot) must be greater than 10 percent of the recorder full scale. If the peak maximum of a 1.0-ml aliquot is off scale on the recorder, further dilute the original source sample to bring the Hg concentration into the calibration range of the spectrophotometer.

11.3.2 Run a blank and standard at least after every five samples to check the spectrophotometer calibration. The peak height of the blank must pass through a point no further from the origin than ±2 percent of the recorder full scale. The difference between the measured concentration of the standard (the product of the corrected peak height and the reciprocal of the least squares slope) and the actual concentration of the standard must be less than 7 percent, or recalibration of the analyzer is required.

11.3.3 Check for Matrix Effects (optional). Use the Method of Standard Additions as follows to check at least one sample from each source for matrix effects on the Hg results. The Method of Standard Additions procedures described on pages 9–4 and 9–5 of the section entitled “General Information” of the Perkin Elmer Corporation Atomic Absorption Spectrophotometry Manual, Number 303–0152 (Reference 16 in Section 16.0) are recommended. If the results of the Method of Standard Additions procedure used on the single source sample do not agree to within ±5 percent of the value obtained by the routine atomic absorption analysis, then reanalyze all samples from the source using the Method of Standard Additions procedure.

11.4 Container No. 2 (Silica Gel). Weigh the spent silica gel (or silica gel plus impinger) to the nearest 0.5 g using a balance. (This step may be conducted in the field.)

12.0 Data Analysis and Calculations

Carry out calculations, retaining at least one extra decimal significant figure beyond that of the acquired data. Round off figures only after the final calculation. Other forms of the equations may be used as long as they give equivalent results.

12.1 Average Dry Gas Meter Temperature and Average Orifice Pressure Drop, Dry Gas Volume, Volume of Water Vapor Condensed, Moisture Content, and Isokinetic Variation. Same as Method 5, Sections 12.2 through 12.5 and 12.11, respectively.

12.2 Stack Gas Velocity. Using the data from this test and Equation 2–9 of Method 2, calculate the average stack gas velocity v_s.

12.3 Total Mercury.

12.3.1 For each source sample, correct the average maximum absorbance of the two consecutive samples whose peak heights agree within 3 percent of their average for the contribution of the solution blank (see Section 10.6.3). Use the calibration curve and these corrected averages to determine the final total weight of Hg in ng in the aeration cell for each source sample.

12.3.2 Correct for any dilutions made to bring the sample into the working range of the spectrophotometer. Then calculate the Hg in the original solution, m_{Hg}, as follows:

$$m_{Hg} = \left[C_{Hg(AC)}\left(DF\right)\left(V_f\right)\left(10^{-3}\right)\right]/S \qquad \text{Eq. 101-1}$$

Where:

CHg(AC)= Total ng of Hg in aliquot analyzed (reagent blank subtracted).

DF = Dilution factor for the Hg-containing solution (before adding to the aeration cell; *e.g.,* DF = 250/2 if the source samples were diluted as described in Section 11.2.2).

V_f= Solution volume of original sample, 1000 ml for samples diluted as described in Section 11.2.1.

10^{-3}= Conversion factor, µg/ng.

S = Aliquot volume added to aeration cell, ml.

12.4 Mercury Emission Rate. Calculate the daily Hg emission rate, R, using Equation 101–2. For continuous operations, the operating time is equal to 86,400 seconds per day. For cyclic operations, use only the time per day each stack is in operation. The total Hg emission rate from a source will be the summation of results from all stacks.

$$R = \frac{K m_{Hg} V_s A_s \left(86,400 \times 10^{-6}\right)}{\left[V_{m(std)} + V_{w(std)}\right]\left(T_s / P_s\right)} \qquad \text{Eq. 101-2}$$

Where:

K_1= 0.3858 °K/mm Hg for metric units.

K_1= 17.64 °R/in. Hg for English units.

K_3= 10^{-6}g/µg for metric units.

= 2.2046 “ × 10^{-9}lb/µg for English units.

P_s= Absolute stack gas pressure, mm Hg (in. Hg).

t = Daily operating time, sec/day.

T_s= Absolute average stack gas temperature, °K (°R).

Vm(std)= Dry gas sample volume at standard conditions, scm (scf).

Vw(std)= Volume of water vapor at standard conditions, scm (scf).

12.5 Determination of Compliance. Each performance test consists of three repetitions of the applicable test method. For the purpose of determining compliance with an applicable national emission standard, use the average of the results of all repetitions.

13.0 Method Performance

The following estimates are based on collaborative tests, wherein 13 laboratories performed duplicate analyses on two Hg-containing samples from a chlor-alkali plant and on one laboratory-prepared sample of known Hg concentration. The sample concentrations ranged from 2 to 65 µg Hg/ml.

13.1 Precision. The estimated intra-laboratory and inter-laboratory standard deviations are 1.6 and 1.8 µg Hg/ml, respectively.

13.2 Accuracy. The participating laboratories that analyzed a 64.3 µg Hg/ml (in 0.1 M ICl) standard obtained a mean of 63.7 µg Hg/ml.

13.3 Analytical Range. After initial dilution, the range of this method is 0.5 to 120 µg Hg/ml. The upper limit can be extended by further dilution of the sample.

14.0 Pollution Prevention.[Reserved]

15.0 Waste Management.[Reserved]

16.0 References

Same as Method 5, Section 17.0, References 1–3, 5, and 6, with the addition of the following:

1. Determining Dust Concentration in a Gas Stream. ASME Performance Test Code No. 27. New York, NY. 1957.

2. DeVorkin, Howard, *et al.* Air Pollution Source Testing Manual. Air Pollution Control District. Los Angeles, CA. November 1963.

3. Hatch, W.R., and W.I. Ott. Determination of Sub-Microgram Quantities of Mercury by Atomic Absorption Spectrophotometry. Anal. Chem. 40:2085–87. 1968.

4. Mark, L.S. Mechanical Engineers' Handbook. McGraw-Hill Book Co., Inc. New York, NY. 1951.

5. Western Precipitation Division of Joy Manufacturing Co. Methods for Determination of Velocity, Volume, Dust and Mist Content of Gases. Bulletin WP–50. Los Angeles, CA. 1968.

6. Perry, J.H. Chemical Engineers' Handbook. McGraw-Hill Book Co., Inc. New York, NY. 1960.

7. Shigehara, R.T., W.F. Todd, and W.S. Smith. Significance of Errors in Stack Sampling Measurements. Stack Sampling News. *1* (3):6–18. September 1973.

8. Smith, W.S., R.T. Shigehara, and W.F. Todd. A Method of Interpreting Stack Sampling Data. Stack Sampling News. *1* (2):8–17. August 1973.

9. Standard Method for Sampling Stacks for Particulate Matter. In: 1971 Annual Book of ASTM Standards, Part 23. ASTM Designation D 2928–71. Philadelphia, PA 1971.

10. Vennard, J.K. Elementary Fluid Mechanics. John Wiley and Sons, Inc. New York. 1947.

11. Mitchell, W.J. and M.R. Midgett. Improved Procedure for Determining Mercury Emissions from Mercury Cell Chlor-Alkali Plants. J. APCA. *26* :674–677. July 1976.

12. Shigehara, R.T. Adjustments in the EPA Nomograph for Different Pitot Tube Coefficients and Dry Molecular Weights. Stack Sampling News. *2* :4–11. October 1974.

13. Vollaro, R.F. Recommended Procedure for Sample Traverses in Ducts Smaller than 12 Inches in Diameter. U.S. Environmental Protection Agency, Emission Measurement Branch. Research Triangle Park, NC. November 1976.

14. Klein, R. and C. Hach. Standard Additions: Uses and Limitation in Spectrophotometric Measurements. Amer. Lab. *9* :21. 1977.

15. Perkin Elmer Corporation. Analytical Methods for Atomic Absorption Spectrophotometry. Norwalk, Connecticut. September 1976.

17.0 Tables, Diagrams, Flowcharts, and Validation Data

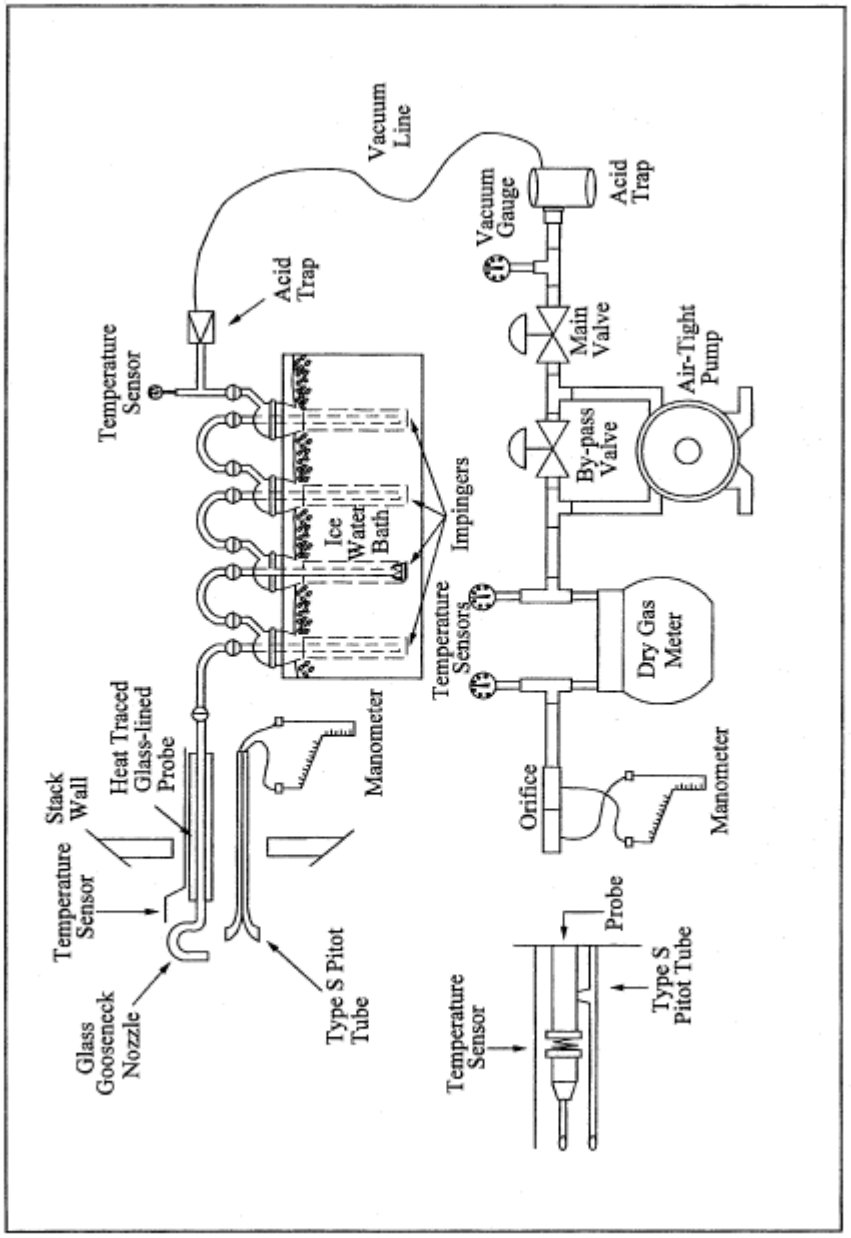

Figure 101-1. Mercury Sampling Train.

View or download PDF

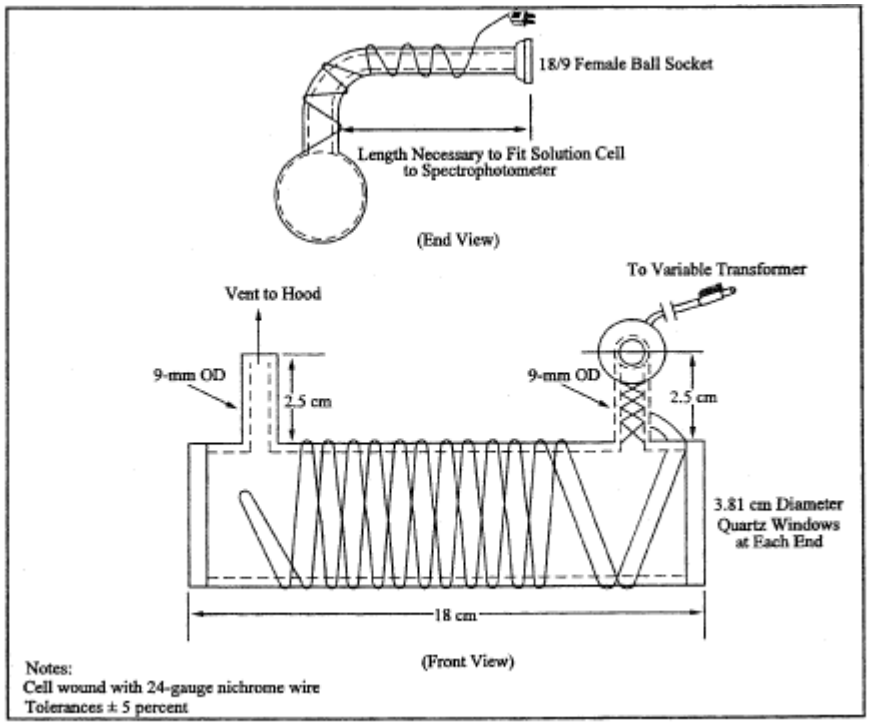

Figure 101-2. Optical Cell.

View or download PDF

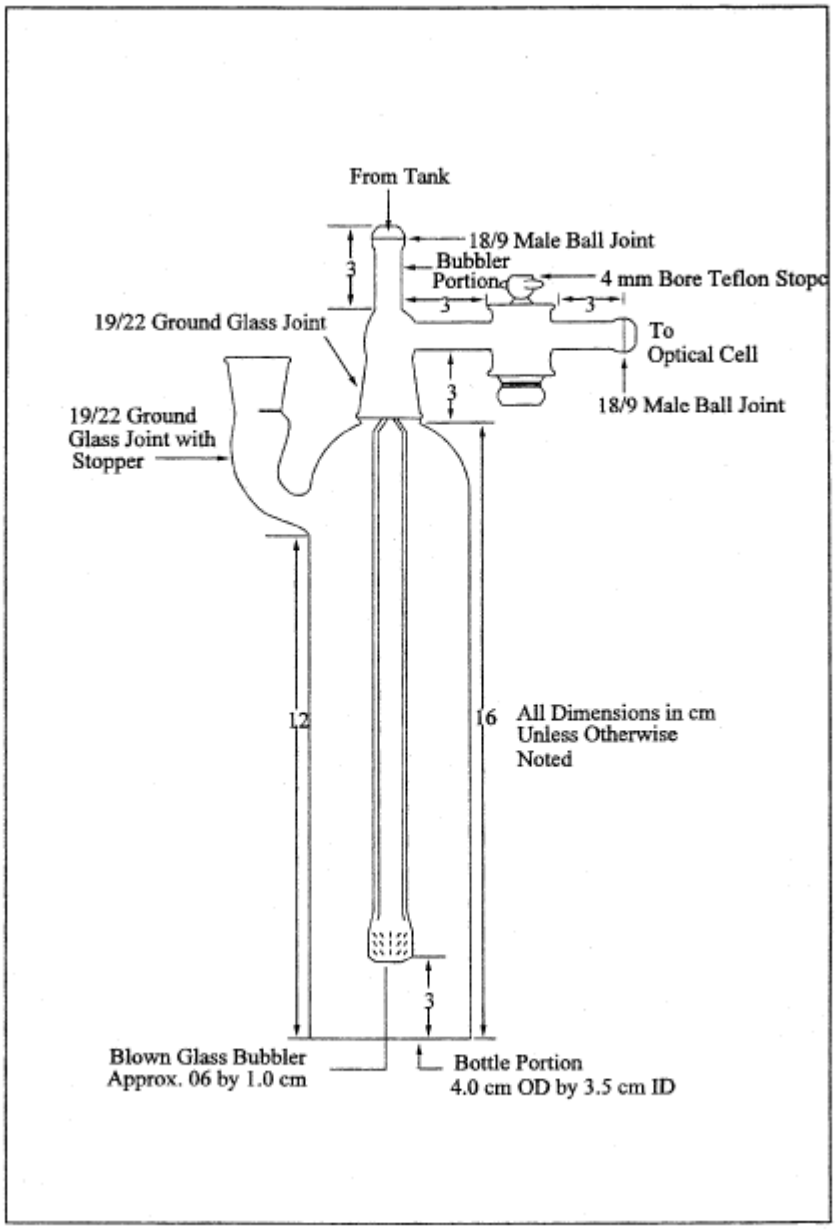

Figure 101-3. Aeration Cell.

View or download PDF

Plant _____
Location _____
Operator _____
Date _____
Run No. _____
Sample box No. _____
Filter box No. _____
Meter H@ _____
C factor _____
Pitot tube coefficient, C_p _____

SCHEMATIC OF STACK CROSS SECTION

Ambient temperature _____
Barometric pressure _____
Assumed moisture, % _____
Probe length, (ft.) _____
Nozzle identification No. _____
Average calibrated nozzle diameter, (in.) _____
Probe heater setting _____
Leak rate, (cfm) _____
Probe liner material _____
Static pressure, (in. Hg) _____
Filter No. _____

Traverse point number	Sampling time	Vacuum	Stack temperature	Velocity head	Pressure differential across orifice meter	Gas meter reading	Gas sample temperature at dry gas meter		Filter holder* temperature	Temperature of gas leaving condenser or last impinger
							Inlet	Outlet		
	min.	(in.Hg)	(T_s) (°F)	(ΔP_s) (in. H_2O)	(in. H_2O)	(ft^3)	(°F)	(°F)	(°F)	(°F)
Total							Avg.	Avg.		
Average							Avg.			

* If Applicable

Figure 101-4. Mercury Field Data.

View or download PDF

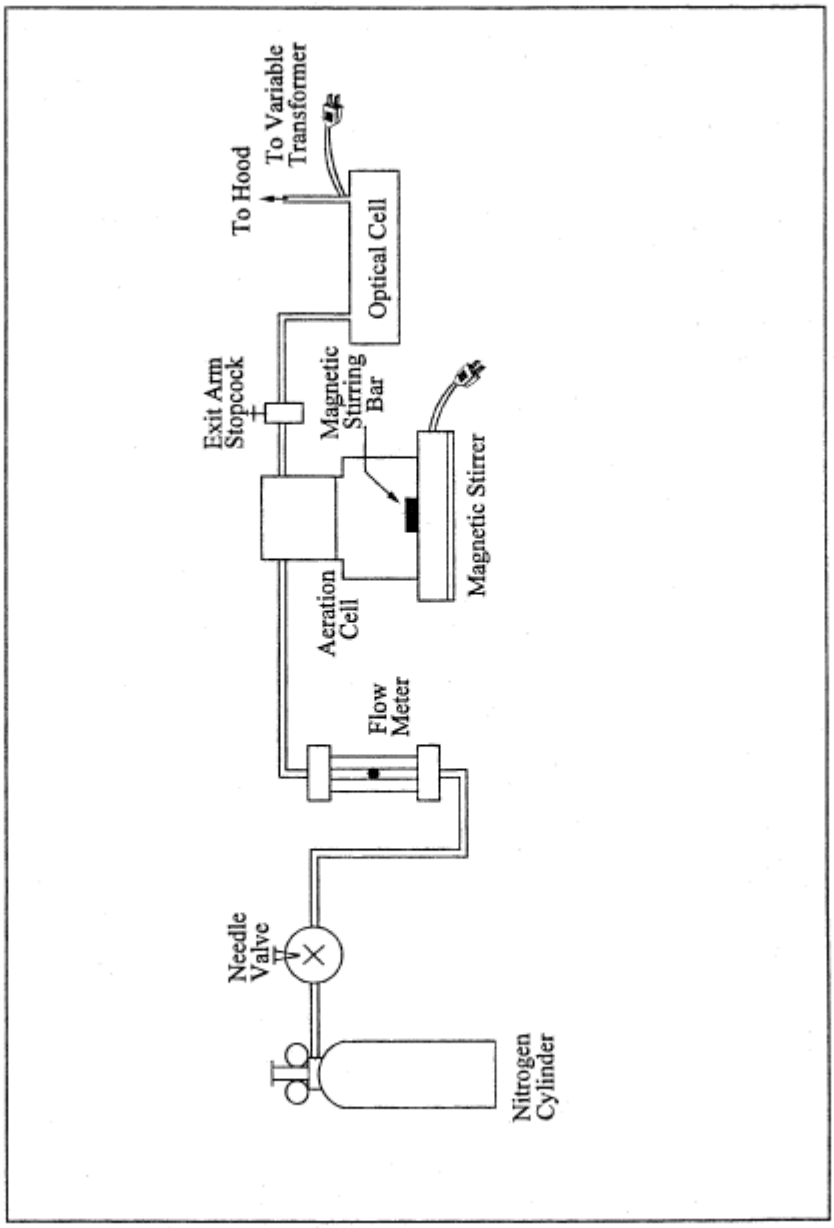

Figure 101-5. Schematic of Aeration System.

View or download PDF

Method 101A—Determination of Particulate and Gaseous Mercury Emissions From Sewage Sludge Incinerators

Note: This method does not include all of the specifications (*e.g.,* equipment and supplies) and procedures (*e.g.,* sampling and analytical) essential to its performance. Some material is incorporated by reference from methods in appendix A to 40 CFR part 60 and in this part. Therefore, to obtain reliable results, persons using this method should also have a thorough knowledge of at least the following additional test methods: Methods 1, Method 2, Method 3, and Method 5 of part 60 (appendix A), and Method 101 part 61 (appendix B).

1.0 Scope and Application

1.1 Analytes.

Analyte	CAS No.	Sensitivity
Mercury (Hg)	7439–97–6	Dependent upon spectrophotometer and recorder.

1.2 Applicability. This method is applicable for the determination of Hg emissions from sewage sludge incinerators and other sources as specified in an applicable subpart of the regulations.

1.3 Data Quality Objectives. Adherence to the requirements of this method will enhance the quality of the data obtained from air pollutant sampling methods.

2.0 Summary of Method

2.1 Particulate and gaseous Hg emissions are withdrawn isokinetically from the source and are collected in acidic potassium permanganate ($KMnO_4$) solution. The Hg collected (in the mercuric form) is reduced to elemental Hg, which is then aerated from the solution into an optical cell and measured by atomic absorption spectrophotometry.

3.0 Definitions.[Reserved]

4.0 Interferences

4.1 Sample Collection. Excessive oxidizable organic matter in the stack gas prematurely depletes the $KMnO_4$solution and thereby prevents further collection of Hg.

4.2 Analysis. Condensation of water vapor on the optical cell windows causes a positive interference.

5.0 Safety

5.1 Disclaimer. This method may involve hazardous materials, operations, and equipment. This test method may not address all of the safety problems associated with its use. It is the responsibility of the user of this test method to establish appropriate safety and health practices and determine the applicability of regulatory limitations prior to performing this test method.

5.2 Corrosive Reagents. The following reagents are hazardous. Personal protective equipment and safe procedures are useful in preventing chemical splashes. If contact occurs, immediately flush with copious amounts of water for at least 15 minutes. Remove clothing under shower and decontaminate. Treat residual chemical burns as thermal burns.

5.2.1 Hydrochloric Acid (HCl). Highly toxic. Vapors are highly irritating to eyes, skin, nose, and lungs, causing severe damage. May cause bronchitis, pneumonia, or edema of lungs. Exposure to concentrations of 0.13 to 0.2 percent can be lethal to humans in a few minutes. Provide ventilation to limit exposure. Reacts with metals, producing hydrogen gas.

5.2.2 Nitric Acid (HNO_3). Highly corrosive to eyes, skin, nose, and lungs. Vapors cause bronchitis, pneumonia, or edema of lungs. Reaction to inhalation may be delayed as long as 30 hours and still be fatal. Provide ventilation to limit exposure. Strong oxidizer. Hazardous reaction may occur with organic materials such as solvents.

5.2.3 Sulfuric acid (H_2SO_4). Rapidly destructive to body tissue. Will cause third degree burns. Eye damage may result in blindness. Inhalation may be fatal from spasm of the larynx, usually within 30 minutes. May cause lung tissue damage with edema. 3 mg/m^3 will cause lung damage in uninitiated. 1 mg/m^3 for 8 hours

will cause lung damage or, in higher concentrations, death. Provide ventilation to limit inhalation. Reacts violently with metals and organics.

5.3 Chlorine Evolution. Hydrochloric acid reacts with $KMnO_4$to liberate chlorine gas. Although this is a minimal concern when small quantities of HCl (5–10 ml) are used in the impinger rinse, a potential safety hazard may still exist. At sources that emit higher concentrations of oxidizable materials (*e.g.,* power plants), more HCl may be required to remove the larger amounts of brown deposit formed in the impingers. In such cases, the potential safety hazards due to sample container pressurization are greater, because of the larger volume of HCl rinse added to the recovered sample. These hazards are eliminated by storing and analyzing the HCl impinger wash separately from the permanganate impinger sample.

6.0 Equipment and Supplies

6.1 Sample Collection and Sample Recovery. Same as Method 101, Sections 6.1 and 6.2, respectively, with the following exceptions:

6.1.1 Probe Liner. Same as in Method 101, Section 6.1.2, except that if a filter is used ahead of the impingers, the probe heating system must be used to minimize the condensation of gaseous Hg.

6.1.2 Filter Holder (Optional). Borosilicate glass with a rigid stainless-steel wire-screen filter support (do not use glass frit supports) and a silicone rubber or Teflon gasket, designed to provide a positive seal against leakage from outside or around the filter. The filter holder must be equipped with a filter heating system capable of maintaining a temperature around the filter holder of 120 ±14 °C (248 ±25 °F) during sampling to minimize both water and gaseous Hg condensation. A filter may also be used in cases where the stream contains large quantities of particulate matter.

6.2 Sample Analysis. Same as Method 101, Section 6.3, with the following additions and exceptions:

6.2.1 Volumetric Pipets. Class A; 1-, 2-, 3-, 4-, 5-, 10-, and 20-ml.

6.2.2 Graduated Cylinder. 25-ml.

6.2.3 Steam Bath.

6.2.4 Atomic Absorption Spectrophotometer or Equivalent. Any atomic absorption unit with an open sample presentation area in which to mount the optical cell is suitable. Instrument settings recommended by the particular manufacturer should be followed. Instruments designed specifically for the measurement of mercury using the cold-vapor technique are commercially available and may be substituted for the atomic absorption spectrophotometer.

6.2.5 Optical Cell. Alternatively, a heat lamp mounted above the cell or a moisture trap installed upstream of the cell may be used.

6.2.6 Aeration Cell. Alternatively, aeration cells available with commercial cold vapor instrumentation may be used.

6.2.7 Aeration Gas Cylinder. Nitrogen, argon, or dry, Hg-free air, equipped with a single-stage regulator. Alternatively, aeration may be provided by a peristaltic metering pump. If a commercial cold vapor instrument is used, follow the manufacturer's recommendations.

7.0 Reagents and Standards

Unless otherwise indicated, it is intended that all reagents conform to the specifications established by the Committee on Analytical Reagents of the American Chemical Society, where such specifications are available; otherwise, use the best available grade.

7.1 Sample Collection and Recovery. The following reagents are required for sample collection and recovery:

7.1.1 Water. Deionized distilled, to conform to ASTM D 1193–77 or 91 Type 1. If high concentrations of organic matter are not expected to be present, the analyst may eliminate the $KMnO_4$test for oxidizable organic matter. Use this water in all dilutions and solution preparations.

7.1.2 Nitric Acid, 50 Percent (V/V). Mix equal volumes of concentrated $HNO_3$and water, being careful to add the acid to the water slowly.

7.1.3 Silica Gel. Indicating type, 6 to 16 mesh. If previously used, dry at 175 °C (350 °F) for 2 hours. New silica gel may be used as received.

7.1.4 Filter (Optional). Glass fiber filter, without organic binder, exhibiting at least 99.95 percent efficiency on 0.3-µm dioctyl phthalate smoke particles. The filter in cases where the gas stream contains large quantities of particulate matter, but blank filters should be analyzed for Hg content.

7.1.5 Sulfuric Acid, 10 Percent (V/V). Carefully add and mix 100 ml of concentrated $H_2SO_4$to 900 ml of water.

7.1.6 Absorbing Solution, 4 Percent $KMnO_4$(W/V). Prepare fresh daily. Dissolve 40 g of $KMnO_4$in sufficient 10 percent $H_2SO_4$to make 1 liter. Prepare and store in glass bottles to prevent degradation.

7.1.7 Hydrochloric Acid, 8 N. Carefully add and mix 67 ml of concentrated HCl to 33 ml of water.

7.2 Sample Analysis. The following reagents and standards are required for sample analysis:

7.2.1 Water. Same as in Section 7.1.1.

7.2.2 Tin (II) Solution. Prepare fresh daily, and keep sealed when not being used. Completely dissolve 20 g of tin (II) chloride (or 25 g of tin (II) sulfate) crystals (Baker Analyzed reagent grade or any other brand that will give a clear solution) in 25 ml of concentrated HCl. Dilute to 250 ml with water. Do not substitute HNO_3H2SO_4, or other strong acids for the HCl.

7.2.3 Sodium Chloride-Hydroxylamine Solution. Dissolve 12 g of sodium chloride and 12 g of hydroxylamine sulfate (or 12 g of hydroxylamine hydrochloride) in water and dilute to 100 ml.

7.2.4 Hydrochloric Acid, 8 N. Same as Section 7.1.7.

7.2.5 Nitric Acid, 15 Percent (V/V). Carefully add 15 ml $HNO_3$to 85 ml of water.

7.2.6 Antifoam B Silicon Emulsion. J.T. Baker Company (or equivalent).

7.2.7 Mercury Stock Solution, 1 mg Hg/ml. Prepare and store all Hg standard solutions in borosilicate glass containers. Completely dissolve 0.1354 g of Hg (II) chloride in 75 ml of water. Add 10 ml of concentrated HNO_3, and adjust the volume to exactly 100 ml with water. Mix thoroughly. This solution is stable for at least one month.

7.2.8 Intermediate Hg Standard Solution, 10 µg/ml. Prepare fresh weekly. Pipet 5.0 ml of the Hg stock solution (Section 7.2.7) into a 500 ml volumetric flask, and add 20 ml of 15 percent HNO_3solution. Adjust the volume to exactly 500 ml with water. Thoroughly mix the solution.

7.2.9 Working Hg Standard Solution, 200 ng Hg/ml. Prepare fresh daily. Pipet 5.0 ml from the “Intermediate Hg Standard Solution” (Section 7.2.8) into a 250-ml volumetric flask. Add 5 ml of 4 percent $KMnO_4$absorbing solution and 5 ml of 15 percent HNO_3. Adjust the volume to exactly 250 ml with water. Mix thoroughly.

7.2.10 Potassium Permanganate, 5 Percent (W/V). Dissolve 5 g of $KMnO_4$in water and dilute to 100 ml.

7.2.11 Filter. Whatman No. 40, or equivalent.

8.0 Sample Collection, Preservation, Transport, and Storage

Same as Method 101, Section 8.0, with the exception of the following:

8.1 Preliminary Determinations. Same as Method 101, Section 8.2, except that the liberation of free iodine in the first impinger due to high Hg or sulfur dioxide concentrations is not applicable. In this method, high oxidizable organic content may make it impossible to sample for the desired minimum time. This problem is indicated by the complete bleaching of the purple color of the $KMnO_4$solution. In cases where an excess of water condensation is encountered, collect two runs to make one sample, or add an extra impinger in front of the first impinger (also containing acidified $KMnO_4$solution).

8.2 Preparation of Sampling Train. Same as Method 101, Section 8.3, with the exception of the following:

8.2.1 In this method, clean all the glass components by rinsing with 50 percent HNO_3, tap water, 8 N HCl, tap water, and finally with deionized distilled water. Then place 50 ml of absorbing solution in the first impinger and 100 ml in each of the second and third impingers.

8.2.2 If a filter is used, use a pair of tweezers to place the filter in the filter holder. Be sure to center the filter, and place the gasket in the proper position to prevent the sample gas stream from bypassing the filter. Check the filter for tears after assembly is completed. Be sure also to set the filter heating system at the desired operating temperature after the sampling train has been assembled.

8.3 Sampling Train Operation. In addition to the procedure outlined in Method 101, Section 8.5, maintain a temperature around the filter (if applicable) of 120 ±14 °C (248 ±25 °F).

8.4 Sample Recovery. Same as Method 101, Section 8.7, with the exception of the following:

8.4.1 Transfer the probe, impinger assembly, and (if applicable) filter assembly to the cleanup area.

8.4.2 Treat the sample as follows:

8.4.2.1 Container No. 1 (Impinger, Probe, and Filter Holder) and, if applicable, Container No. 1A (HCl rinse).

8.4.2.1.1 Using a graduated cylinder, measure the liquid in the first three impingers to within 1 ml. Record the volume of liquid present (*e.g.,* see Figure 5–6 of Method 5). This information is needed to calculate the moisture content of the effluent gas. (Use only graduated cylinder and glass storage bottles that have been precleaned as in Section 8.2.1.) Place the contents of the first three impingers (four if an extra impinger was added as described in Section 8.1) into a 1000-ml glass sample bottle labeled Container No. 1.

Note: If a filter is used, remove the filter from its holder as outlined under Section 8.4.3.

8.4.2.1.2 Taking care that dust on the outside of the probe or other exterior surfaces does not get into the sample, quantitatively recover the Hg (and any condensate) from the probe nozzle, probe fitting, probe liner, front half of the filter holder (if applicable), and impingers as follows: Rinse these components with a total of 400 ml (350 ml if an extra impinger was added as described in Section 8.1) of fresh absorbing solution, carefully assuring removal of all loose particulate matter from the impingers; add all washings to the 1000 ml glass sample bottle. To remove any residual brown deposits on the glassware following the permanganate rinse, rinse with approximately 100 ml of water, carefully assuring removal of all loose particulate matter from the impingers. Add this rinse to Container No. 1.

8.4.2.1.3 If no visible deposits remain after this water rinse, do not rinse with 8 N HCl. If deposits do remain on the glassware after the water rinse, wash impinger walls and stems with 25 ml of 8 N HCl, and place the

wash in a separate container labeled Container No. 1A as follows: Place 200 ml of water in a sample container labeled Container No. 1A. Wash the impinger walls and stem with the HCl by turning the impinger on its side and rotating it so that the HCl contacts all inside surfaces. Pour the HCl wash carefully with stirring into Container No. 1A.

8.4.2.1.4 After all washings have been collected in the appropriate sample container(s), tighten the lid(s) on the container(s) to prevent leakage during shipment to the laboratory. Mark the height of the fluid level to allow subsequent determination of whether leakage has occurred during transport. Label each container to identify its contents clearly.

8.4.3 Container No. 2 (Silica Gel). Same as Method 5, Section 8.7.6.3.

8.4.4 Container No. 3 (Filter). If a filter was used, carefully remove it from the filter holder, place it in a 100-ml glass sample bottle, and add 20 to 40 ml of absorbing solution. If it is necessary to fold the filter, be sure that the particulate cake is inside the fold. Carefully transfer to the 100-ml sample bottle any particulate matter and filter fibers that adhere to the filter holder gasket by using a dry Nylon bristle brush and a sharp-edged blade. Seal the container. Label the container to identify its contents clearly. Mark the height of the fluid level to allow subsequent determination of whether leakage has occurred during transport.

8.4.5 Container No. 4 (Filter Blank). If a filter was used, treat an unused filter from the same filter lot as that used for sampling according to the procedures outlined in Section 8.4.4.

8.4.6 Container No. 5 (Absorbing Solution Blank). Place 650 ml of 4 percent $KMnO_4$absorbing solution in a 1000-ml sample bottle. Seal the container.

8.4.7 Container No. 6 (HCl Rinse Blank). Place 200 ml of water in a 1000-ml sample bottle, and add 25 ml of 8 N HCl carefully with stirring. Seal the container. Only one blank sample per 3 runs is required.

9.0 Quality Control

9.1 Miscellaneous Quality Control Measures.

Section	Quality control measure	Effect
8.0, 10.0	Sampling equipment leak-checks and calibration	Ensure accuracy and precision of sampling measurements.
10.2	Spectrophotometer calibration	Ensure linearity of spectrophotometer response to standards.
11.3.3	Check for matrix effects	Eliminate matrix effects.

9.2 Volume Metering System Checks. Same as Method 5, Section 9.2.

10.0 Calibration and Standardization

Same as Method 101, Section 10.0, with the following exceptions:

10.1 Optical Cell Heating System Calibration. Same as in Method 101, Section 10.4, except use a-25 ml graduated cylinder to add 25 ml of water to the bottle section of the aeration cell.

10.2 Spectrophotometer and Recorder Calibration.

10.2.1 The Hg response may be measured by either peak height or peak area.

Note: The temperature of the solution affects the rate at which elemental Hg is released from a solution and, consequently, it affects the shape of the absorption curve (area) and the point of maximum absorbance (peak height). To obtain reproducible results, all solutions must be brought to room temperature before use.

10.2.2 Set the spectrophotometer wave length at 253.7 nm, and make certain the optical cell is at the minimum temperature that will prevent water condensation. Then set the recorder scale as follows: Using a 25-ml graduated cylinder, add 25 ml of water to the aeration cell bottle. Add three drops of Antifoam B to the bottle, and then pipet 5.0 ml of the working Hg standard solution into the aeration cell.

Note: Always add the Hg-containing solution to the aeration cell after the 25 ml of water.

10.2.3 Place a Teflon-coated stirring bar in the bottle. Add 5 ml of absorbing solution to the aeration bottle, and mix well. Before attaching the bottle section to the bubbler section of the aeration cell, make certain that (1) the aeration cell exit arm stopcock (Figure 101–3 of Method 101) is closed (so that Hg will not prematurely enter the optical cell when the reducing agent is being added) and (2) there is no flow through the bubbler. If conditions (1) and (2) are met, attach the bottle section to the bubbler section of the aeration cell. Add sodium chloride-hydroxylamine in 1 ml increments until the solution is colorless. Now add 5 ml of tin (II) solution to the aeration bottle through the side arm, and immediately stopper the side arm. Stir the solution for 15 seconds, turn on the recorder, open the aeration cell exit arm stopcock, and immediately initiate aeration with continued stirring. Determine the maximum absorbance of the standard, and set this value to read 90 percent of the recorder full scale.

11.0 Analytical Procedure

11.1 Sample Loss Check. Check the liquid level in each container to see if liquid was lost during transport. If a noticeable amount of leakage occurred, either void the sample or use methods subject to the approval of the Administrator to account for the losses.

11.2 Sample Preparation. Treat sample containers as follows:

11.2.1 Containers No. 3 and No. 4 (Filter and Filter Blank).

11.2.1.1 If a filter is used, place the contents, including the filter, of Containers No. 3 and No. 4 in separate 250-ml beakers, and heat the beakers on a steam bath until most of the liquid has evaporated. Do not heat to dryness. Add 20 ml of concentrated $HNO_3$to the beakers, cover them with a watch glass, and heat on a hot plate at 70 °C (160 °F) for 2 hours. Remove from the hot plate.

11.2.1.2 Filter the solution from digestion of the Container No. 3 contents through Whatman No. 40 filter paper, and save the filtrate for addition to the Container No. 1 filtrate as described in Section 11.2.2. Discard the filter paper.

11.2.1.3 Filter the solution from digestion of the Container No. 4 contents through Whatman No. 40 filter paper, and save the filtrate for addition to Container No. 5 filtrate as described in Section 11.2.3 below. Discard the filter paper.

11.2.2 Container No. 1 (Impingers, Probe, and Filter Holder) and, if applicable, No. 1A (HCl rinse).

11.2.2.1 Filter the contents of Container No. 1 through Whatman No. 40 filter paper into a 1 liter volumetric flask to remove the brown manganese dioxide (MnO_2) precipitate. Save the filter for digestion of the brown MnO_2precipitate. Add the sample filtrate from Container No. 3 to the 1-liter volumetric flask, and dilute to volume with water. If the combined filtrates are greater than 1000 ml, determine the volume to the nearest ml and make the appropriate corrections for blank subtractions. Mix thoroughly. Mark the filtrate as analysis Sample No. A.1 and analyze for Hg within 48 hr of the filtration step. Place the saved filter, which was used to remove the brown MnO_2precipitate, into an appropriate sized container. In a laboratory hood, add 25 ml of 8 N HCl to the filter and allow to digest for a minimum of 24 hours at room temperature.

11.2.2.2 Filter the contents of Container 1A through Whatman No. 40 filter paper into a 500-ml volumetric flask. Then filter the digestate of the brown MnO_2precipitate from Container No. 1 through Whatman No. 40 filter paper into the same 500-ml volumetric flask, and dilute to volume with water. Mark this combined 500 ml dilute solution as analysis Sample No. A.2. Discard the filters.

11.2.3 Container No. 5 (Absorbing Solution Blank) and No. 6 (HCl Rinse Blank).

11.2.3.1 Treat Container No. 5 as Container No. 1 (as described in Section 11.2.2), except substitute the filter blank filtrate from Container No. 4 for the sample filtrate from Container No. 3, and mark as Sample A.1 Blank.

11.2.3.2 Treat Container No. 6 as Container No. 1A, (as described in Section 11.2.2, except substitute the filtrate from the digested blank MnO_2precipitate for the filtrate from the digested sample MnO_2precipitate, and mark as Sample No. A.2 Blank.

Note: When analyzing samples A.1 Blank and HCl A.2 Blank, always begin with 10 ml aliquots. This applies specifically to blank samples.

11.3 Analysis. Calibrate the analytical equipment and develop a calibration curve as outlined in Section 10.0.

11.3.1 Mercury Samples. Then repeat the procedure used to establish the calibration curve with appropriately sized aliquots (1 to 10 ml) of the samples (from Sections 11.2.2 and 11.2.3) until two consecutive peak heights agree within 3 percent of their average value. If the 10 ml sample is below the detectable limit, use a larger aliquot (up to 20 ml), but decrease the volume of water added to the aeration cell accordingly to prevent the solution volume from exceeding the capacity of the aeration bottle. If the peak maximum of a 1.0 ml aliquot is off scale, further dilute the original sample to bring the Hg concentration into the calibration range of the spectrophotometer. If the Hg content of the absorbing solution and filter blank is below the working range of the analytical method, use zero for the blank.

11.3.2 Run a blank and standard at least after every five samples to check the spectrophotometer calibration; recalibrate as necessary.

11.3.3 Check for Matrix Effects (optional). Same as Method 101, Section 11.3.3.

12.0 Data Analysis and Calculations

Note: Carry out calculations, retaining at least one extra decimal significant figure beyond that of the acquired data. Round off figures only after the final calculation. Other forms of the equations may be used as long as they give equivalent results.

12.1 Nomenclature.

C(fltr)Hg= Total ng of Hg in aliquot of $KMnO_4$filtrate and HNO_3digestion of filter analyzed (aliquot of analysis Sample No. A.1).

C(fltr blk)Hg= Total ng of Hg in aliquot of $KMnO_4$blank and HNO_3digestion of blank filter analyzed (aliquot of analysis Sample No. A.1 blank).

C(HC1 blk)Hg= Total ng of Hg analyzed in aliquot of the 500-ml analysis Sample No. HCl A.2 blank.

C(HCl)Hg= Total ng of Hg analyzed in the aliquot from the 500-ml analysis Sample No. HCl A.2.

DF = Dilution factor for the HCl-digested Hg-containing solution, Analysis Sample No. “HCl A.2.”

DF_{blk}= Dilution factor for the HCl-digested Hg containing solution, Analysis Sample No. "HCl A.2 blank." (Refer to sample No. "HCl A.2" dilution factor above.)

m(fltr)Hg= Total blank corrected µg of Hg in $KMnO_4$filtrate and HNO_3digestion of filter sample.

m(HCl)Hg= Total blank corrected µg of Hg in HCl rinse and HCl digestate of filter sample.

m_{Hg}= Total blank corrected Hg content in each sample, µg.

S = Aliquot volume of sample added to aeration cell, ml.

S_{blk}= Aliquot volume of blank added to aeration cell, ml.

Vf(blk)= Solution volume of blank sample, 1000 ml for samples diluted as described in Section 11.2.2.

Vf(fltr)= Solution volume of original sample, normally 1000 ml for samples diluted as described in Section 11.2.2.

Vf(HCl)= Solution volume of original sample, 500 ml for samples diluted as described in Section 11.2.1.

10^{-3}= Conversion factor, µg/ng.

12.2 Average Dry Gas Meter Temperature and Average Orifice Pressure Drop, Dry Gas Volume, Volume of Water Vapor Condensed, Moisture Content, Isokinetic Variation, and Stack Gas Velocity and Volumetric Flow Rate. Same as Method 5, Sections 12.2 through 12.5, 12.11, and 12.12, respectively.

12.3 Total Mercury.

12.3.1 For each source sample, correct the average maximum absorbance of the two consecutive samples whose peak heights agree within 3 percent of their average for the contribution of the blank. Use the calibration curve and these corrected averages to determine the final total weight of Hg in ng in the aeration cell for each source sample.

12.3.2 Correct for any dilutions made to bring the sample into the working range of the spectrophotometer.

$$m_{(HCl)Hg} = \frac{\left[C_{(HCl)Hg} DF\right]}{S} - \frac{\left[C_{(HClblk)Hg} DF_{blk}\right]}{S_{blk}} Vf_{(HCl)} \left(10^{-3}\right) \qquad \text{Eq. 101A-1}$$

Note: This dilution factor applies only to the intermediate dilution steps, since the original sample volume $[(V_f)_{HCL}]$ of "HCl A.2" has been factored out in the equation along with the sample aliquot (S). In Eq. 101A–1, the sample aliquot, S, is introduced directly into the aeration cell for analysis according to the procedure outlined in Section 11.3.1. A dilution factor is required only if it is necessary to bring the sample into the analytical instrument's calibration range.

Note: The maximum allowable blank subtraction for the HCl is the lesser of the two following values: (1) the actual blank measured value (analysis Sample No. HCl A.2 blank), or (2) 5% of the Hg content in the combined HCl rinse and digested sample (analysis Sample No. HCl A.2).

$$m_{(fltr)Hg} = \frac{\left[C_{(fltr)Hg} DF\, V_{f(fltr)}\right]}{S} - \frac{\left[C_{(fltrblk)Hg} DF_{blk}\, V_{f(blk)}\right]}{S_{blk}} \qquad \text{Eq. 101A-2}$$

Note: The maximum allowable blank subtraction for the HCl is the lesser of the two following values: (1) the actual blank measured value (analysis Sample No. “A.1 blank”), or (2) 5% of the Hg content in the filtrate (analysis Sample No. “A.1”).

$$m_{Hg} = m_{(HCl)Hg} + m_{(filtr)Hg} \qquad \text{Eq. 101A-3}$$

12.3 Mercury Emission Rate. Same as Method 101, Section 12.3.

12.4 Determination of Compliance. Same as Method 101, Section 12.4.

13.0 Method Performance

13.1 Precision. Based on eight paired-train tests, the intra-laboratory standard deviation was estimated to be 4.8 µg/ml in the concentration range of 50 to 130 µg/m3.

13.2 Bias. [Reserved]

13.3 Range. After initial dilution, the range of this method is 20 to 800 ng Hg/ml. The upper limit can be extended by further dilution of the sample.

14.0 Pollution Prevention[Reserved]

15.0 Waste Management[Reserved]

16.0 References

Same as Section 16.0 of Method 101, with the addition of the following:

1. Mitchell, W.J., *et al.* Test Methods to Determine the Mercury Emissions from Sludge Incineration Plants. U.S. Environmental Protection Agency. Research Triangle Park, NC. Publication No. EPA–600/4–79–058. September 1979.

2. Wilshire, Frank W., *et al.* Reliability Study of the U.S. EPA's Method 101A—Determination of Particulate and Gaseous Mercury Emissions. U.S. Environmental Protection Agency. Research Triangle Park, NC. Report No. 600/D–31/219 AREAL 367, NTIS Acc No. PB91–233361.

3. Memorandum from William J. Mitchell to Roger T. Shigehara discussing the potential safety hazard in Section 7.2 of Method 101A. February 28, 1990.

17.0 Tables, Diagrams, Flowcharts, And Validation Data[Reserved]

Method 102—Determination of Particulate and Gaseous Mercury Emissions From Chlor-Alkali Plants (Hydrogen Streams)

Note: This method does not include all of the specifications (*e.g.,* equipment and supplies) and procedures (*e.g.,* sampling and analytical) essential to its performance. Some material is incorporated by reference from other methods in this part and in appendix A to 40 CFR part 60. Therefore, to obtain reliable results, persons using this method should have a thorough knowledge of at least the following additional test methods: Method 1, Method 2, Method 3, Method 5, and Method 101.

1.0 Scope and Application

1.1 Analytes.

Analyte	CAS No.	Sensitivity
Mercury (Hg)	7439–97–6	Dependent upon recorder and spectrophotometer.

1.2 Applicability. This method is applicable for the determination of Hg emissions, including both particulate and gaseous Hg, from chlor-alkali plants and other sources (as specified in the regulations) where the carrier-gas stream in the duct or stack is principally hydrogen.

1.3 Data Quality Objectives. Adherence to the requirements of this method will enhance the quality of the data obtained from air pollutant sampling methods.

2.0 Summary of Method

2.1 Particulate and gaseous Hg emissions are withdrawn isokinetically from the source and collected in acidic iodine monochloride (ICl) solution. The Hg collected (in the mercuric form) is reduced to elemental Hg, which is then aerated from the solution into an optical cell and measured by atomic absorption spectrophotometry.

3.0 Definitions[Reserved]

4.0 Interferences

Same as Method 101, Section 4.2.

5.0 Safety

5.1 Disclaimer. This method may involve hazardous materials, operations, and equipment. This test method may not address all of the safety problems associated with its use. It is the responsibility of the user of this test method to establish appropriate safety and health practices and determine the applicability of regulatory limitations prior to performing this test method.

5.2 Corrosive Reagents. Same as Method 101, Section 5.2.

5.3 Explosive Mixtures. The sampler must conduct the source test under conditions of utmost safety because hydrogen and air mixtures are explosive. Since the sampling train essentially is leakless, attention to safe operation can be concentrated at the inlet and outlet. If a leak does occur, however, remove the meter box cover to avoid a possible explosive mixture. The following specific precautions are recommended:

5.3.1 Operate only the vacuum pump during the test. The other electrical equipment, *e.g.,* heaters, fans, and timers, normally are not essential to the success of a hydrogen stream test.

5.3.2 Seal the sample port to minimize leakage of hydrogen from the stack.

5.3.3 Vent sampled hydrogen at least 3 m (10 ft) away from the train. This can be accomplished by attaching a 13-mm (0.50-in.) ID Tygon tube to the exhaust from the orifice meter.

Note: A smaller ID tubing may cause the orifice meter calibration to be erroneous. Take care to ensure that the exhaust line is not bent or pinched.

6.0 Equipment and Supplies

Same as Method 101, Section 6.0, with the exception of the following:

6.1 Probe Heating System. Do not use, unless otherwise specified.

6.2 Glass Fiber Filter. Do not use, unless otherwise specified.

7.0 Reagents and Standards

Same as Method 101, Section 7.0.

8.0 Sample Collection, Preservation, Transport, and Storage

Same as Method 101, Section 8.0, with the exception of the following:

8.1 Setting of Isokinetic Rates.

8.1.1 If a nomograph is used, take special care in the calculation of the molecular weight of the stack gas and in the setting of the nomograph to maintain isokinetic conditions during sampling (Sections 8.1.1.1 through 8.1.1.3 below).

8.1.1.1 Calibrate the meter box orifice. Use the techniques described in APTD–0576 (see Reference 9 in Section 17.0 of Method 5). Calibration of the orifice meter at flow conditions that simulate the conditions at the source is suggested. Calibration should either be done with hydrogen or with some other gas having similar Reynolds Number so that there is similarity between the Reynolds Numbers during calibration and during sampling.

8.1.1.2 The nomograph described in APTD–0576 cannot be used to calculate the C factor because the nomograph is designed for use when the stack gas dry molecular weight is 29 ±4. Instead, the following calculation should be made to determine the proper C factor:

$$C = 0.00154 \Delta H @ C_p^{\,2} T_m \left(P_s / P_m \right) \frac{\left(1 - B_{ws}\right)^2}{\left(1 - B_{ws}\right) + 18 B_{ws}} \qquad \text{Eq. 102-1}$$

Where:

B_{ws}= Fraction by volume of water vapor in the stack gas.

C_p= Pitot tube calibration coefficient, dimensionless.

M_d= Dry molecular weight of stack gas, lb/lb-mole.

P_s= Absolute pressure of stack gas, in. Hg.

P_m= Absolute pressure of gas at the meter, in. Hg.

T_m= Absolute temperature of gas at the orifice, °R.

ΔH@= Meter box calibration factor obtained in Section 8.1.1.1, in. H_2O.

0.00154 = (in. H_2O/°R).

Note: This calculation is left in English units, and is not converted to metric units because nomographs are based on English units.

8.1.1.3 Set the calculated C factor on the operating nomograph, and select the proper nozzle diameter and K factor as specified in APTD–0576. If the C factor obtained in Section 8.1.1.2 exceeds the values specified on the existing operating nomograph, expand the C scale logarithmically so that the values can be properly located.

8.1.2 If a calculator is used to set isokinetic rates, it is suggested that the isokinetic equation presented in Reference 13 in Section 17.0 of Method 101 be consulted.

8.2 Sampling in Small (<12-in. Diameter) Stacks. When the stack diameter (or equivalent diameter) is less than 12 inches, conventional pitot tube-probe assemblies should not be used. For sampling guidelines, see Reference 14 in Section 17.0 of Method 101.

9.0 Quality Control

Same as Method 101, Section 9.0.

10.0 Calibration and Standardizations

Same as Method 101, Section 10.0.

11.0 Analytical Procedure

Same as Method 101, Section 11.0.

12.0 Data Analysis and Calculations

Same as Method 101, Section 12.0.

13.0 Method Performance

Same as Method 101, Section 13.0.

13.1 Analytical Range. After initial dilution, the range of this method is 0.5 to 120 µg Hg/ml. The upper limit can be extended by further dilution of the sample.

14.0 Pollution Prevention.[Reserved]

15.0 Waste Management.[Reserved]

16.0 References

Same as Method 101, Section 16.0.

17.0 Tables, Diagrams, Flowcharts, and Validation Data.[Reserved]

Method 103—Beryllium Screening Method

1.0 Scope and Application

1.1 Analytes.

Analyte	CAS No.	Sensitivity

Beryllium (Be)	7440–41–7	Dependent upon analytical procedure used.

1.2 Applicability. This procedure details guidelines and requirements for methods acceptable for use in determining Be emissions in ducts or stacks at stationary sources.

1.3 Data Quality Objectives. Adherence to the requirements of this method will enhance the quality of the data obtained from air pollutant sampling methods.

2.0 Summary of Method

2.1 Particulate Be emissions are withdrawn isokinetically from three points in a duct or stack and are collected on a filter. The collected sample is analyzed for Be using an appropriate technique.

3.0 Definitions.[Reserved]

4.0 Interferences.[Reserved]

5.0 Safety

5.1 Disclaimer. This method may involve hazardous materials, operations, and equipment. This test method may not address all of the safety problems associated with its use. It is the responsibility of the user of this test method to establish appropriate safety and health practices and determine the applicability of regulatory limitations prior to performing this test method.

5.2 Hydrochloric Acid (HCl). Highly corrosive and toxic. Vapors are highly irritating to eyes, skin, nose, and lungs, causing severe damage. May cause bronchitis, pneumonia, or edema of lungs. Exposure to concentrations of 0.13 to 0.2 percent can be lethal to humans in a few minutes. Provide ventilation to limit exposure. Reacts with metals, producing hydrogen gas. Personal protective equipment and safe procedures are useful in preventing chemical splashes. If contact occurs, immediately flush with copious amounts of water at least 15 minutes. Remove clothing under shower and decontaminate. Treat residual chemical burn as thermal burn.

6.0 Equipment and Supplies

6.1 Sample Collection. A schematic of the required sampling train configuration is shown in Figure 103–1 in Section 17.0. The essential components of the train are as follows:

6.1.1 Nozzle. Stainless steel, or equivalent, with sharp, tapered leading edge.

6.1.2 Probe. Sheathed borosilicate or quartz glass tubing.

6.1.3 Filter. Millipore AA, or equivalent, with appropriate filter holder that provides a positive seal against leakage from outside or around the filter. It is suggested that a Whatman 41, or equivalent, be placed immediately against the back side of the Millipore filter as a guard against breakage of the Millipore. Include the backup filter in the analysis. To be equivalent, other filters shall exhibit at least 99.95 percent efficiency (0.05 percent penetration) on 0.3 micron dioctyl phthalate smoke particles, and be amenable to the Be analysis procedure. The filter efficiency tests shall be conducted in accordance with ASTM D 2986–71, 78, 95a (incorporated by reference—see §61.18). Test data from the supplier's quality control program are sufficient for this purpose.

6.1.4 Meter-Pump System. Any system that will maintain isokinetic sampling rate, determine sample volume, and is capable of a sampling rate of greater than 14 lpm (0.5 cfm).

6.2 Measurement of Stack Conditions. The following equipment is used to measure stack conditions:

6.2.1 Pitot Tube. Type S, or equivalent, with a constant coefficient (±5 percent) over the working range.

6.2.2 Inclined Manometer, or Equivalent. To measure velocity head to ±10 percent of the minimum value.

6.2.3 Temperature Measuring Device. To measure stack temperature to ±1.5 percent of the minimum absolute stack temperature.

6.2.4 Pressure Measuring Device. To measure stack pressure to ±2.5 mm Hg (0.1 in. Hg).

6.2.5 Barometer. To measure atmospheric pressure to ±2.5 mm Hg (0.1 in. Hg).

6.2.6 Wet and Dry Bulb Thermometers, Drying Tubes, Condensers, or Equivalent. To determine stack gas moisture content to ±1 percent.

6.3 Sample Recovery.

6.3.1 Probe Cleaning Equipment. Probe brush or cleaning rod at least as long as probe, or equivalent. Clean cotton balls, or equivalent, should be used with the rod.

6.3.2 Leakless Glass Sample Bottles. To contain sample.

6.4 Analysis. All equipment necessary to perform an atomic absorption, spectrographic, fluorometric, chromatographic, or equivalent analysis.

7.0 Reagents and Standards

7.1 Sample Recovery.

7.1.1 Water. Deionized distilled, to conform to ASTM D 1193–77, 91 (incorporated by reference—see §61.18), Type 3.

7.1.2 Acetone. Reagent grade.

7.1.3 Wash Acid, 50 Percent (V/V) Hydrochloric Acid (HCl). Mix equal volumes of concentrated HCl and water, being careful to add the acid slowly to the water.

7.2 Analysis. Reagents and standards as necessary for the selected analytical procedure.

8.0 Sample Collection, Preservation, Transport, and Storage

Guidelines for source testing are detailed in the following sections. These guidelines are generally applicable; however, most sample sites differ to some degree and temporary alterations such as stack extensions or expansions often are required to insure the best possible sample site. Further, since Be is hazardous, care should be taken to minimize exposure. Finally, since the total quantity of Be to be collected is quite small, the test must be carefully conducted to prevent contamination or loss of sample.

8.1 Selection of a Sampling Site and Number of Sample Runs. Select a suitable sample site that is as close as practicable to the point of atmospheric emission. If possible, stacks smaller than one foot in diameter should not be sampled.

8.1.1 Ideal Sampling Site. The ideal sampling site is at least eight stack or duct diameters downstream and two diameters upstream from any flow disturbance such as a bend, expansion or contraction. For rectangular cross sections, use Equation 103–1 in Section 12.2 to determine an equivalent diameter, D_e.

8.1.2 Alternate Sampling Site. Some sampling situations may render the above sampling site criteria impractical. In such cases, select an alternate site no less than two diameters downstream and one-half diameter upstream from any point of flow disturbance. Additional sample runs are recommended at any sample site not meeting the criteria of Section 8.1.1.

8.1.3 Number of Sample Runs Per Test. Three sample runs constitute a test. Conduct each run at one of three different points. Select three points that proportionately divide the diameter, or are located at 25, 50, and 75 percent of the diameter from the inside wall. For horizontal ducts, sample on a vertical line through the centroid. For rectangular ducts, sample on a line through the centroid and parallel to a side. If additional sample runs are performed per Section 8.1.2, proportionately divide the duct to accommodate the total number of runs.

8.2 Measurement of Stack Conditions. Using the equipment described in Section 6.2, measure the stack gas pressure, moisture, and temperature to determine the molecular weight of the stack gas. Sound engineering estimates may be made in lieu of direct measurements. Describe the basis for such estimates in the test report.

8.3 Preparation of Sampling Train.

8.3.1 Assemble the sampling train as shown in Figure 103–1. It is recommended that all glassware be precleaned by soaking in wash acid for two hours.

8.3.2 Leak check the sampling train at the sampling site. The leakage rate should not be in excess of 1 percent of the desired sample rate.

8.4 Sampling Train Operation.

8.4.1 For each run, measure the velocity at the selected sampling point. Determine the isokinetic sampling rate. Record the velocity head and the required sampling rate. Place the nozzle at the sampling point with the tip pointing directly into the gas stream. Immediately start the pump and adjust the flow to isokinetic conditions. At the conclusion of the test, record the sampling rate. Again measure the velocity head at the sampling point. The required isokinetic rate at the end of the period should not have deviated more than 20 percent from that originally calculated. Describe the reason for any deviation beyond 20 percent in the test report.

8.4.2 Sample at a minimum rate of 14 liters/min (0.5 cfm). Obtain samples over such a period or periods of time as are necessary to determine the maximum emissions which would occur in a 24-hour period. In the case of cyclic operations, perform sufficient sample runs so as to allow determination or calculation of the emissions that occur over the duration of the cycle. A minimum sampling time of two hours per run is recommended.

8.5 Sample Recovery.

8.5.1 It is recommended that all glassware be precleaned as in Section 8.3. Sample recovery should also be performed in an area free of possible Be contamination. When the sampling train is moved, exercise care to prevent breakage and contamination. Set aside a portion of the acetone used in the sample recovery as a blank for analysis. The total amount of acetone used should be measured for accurate blank correction. Blanks can be eliminated if prior analysis shows negligible amounts.

8.5.2 Remove the filter (and backup filter, if used) and any loose particulate matter from filter holder, and place in a container.

8.5.3 Clean the probe with acetone and a brush or long rod and cotton balls. Wash into the container with the filter. Wash out the filter holder with acetone, and add to the same container.

9.0 Quality Control.[Reserved]

10.0 Calibration and Standardization

10.1 Sampling Train. As a procedural check, compare the sampling rate regulation with a dry gas meter, spirometer, rotameter (calibrated for prevailing atmospheric conditions), or equivalent, attached to the nozzle inlet of the complete sampling train.

10.2 Analysis. Perform the analysis standardization as suggested by the manufacturer of the instrument, or the procedures for the analytical method in use.

11.0 Analytical Procedure

Make the necessary preparation of samples and analyze for Be. Any currently acceptable method (e.g., atomic absorption, spectrographic, fluorometric, chromatographic) may be used.

12.0 Data Analysis and Calculations

12.1 Nomenclature.

A_s(avg) = Stack area, m^2 (ft^2).

L = Length.

R = Be emission rate, g/day.

V_s(avg) = Average stack gas velocity, m/sec (ft/sec).

V_{total}= Total volume of gas sampled, m^3 (ft^3).

W = Width.

W_t= Total weight of Be collected, mg.

10^{-6}= Conversion factor, g/µg.

86,400 = Conversion factor, sec/day.

12.2 Calculate the equivalent diameter, De, for a rectangular cross section as follows:

$$D_e = \frac{2 \cdot L \cdot W}{L + W} \qquad \text{Eq. 103-1}$$

12.3 Calculate the Be emission rate, R, in g/day for each stack using Equation 103–2. For cyclic operations, use only the time per day each stack is in operation. The total Be emission rate from a source is the summation of results from all stacks.

$$R = \frac{W_t V_{s(avg)} A_s (86,400)(10^{-6})}{V_{total}} \qquad \text{Eq. 103-2}$$

12.4 Test Report. Prepare a test report that includes as a minimum: A detailed description of the sampling train used, results of the procedural check described in Section 10.1 with all data and calculations made, all pertinent data taken during the test, the basis for any estimates made, isokinetic sampling calculations, and emission results. Include a description of the test site, with a block diagram and brief description of the

process, location of the sample points in the stack cross section, and stack dimensions and distances from any point of disturbance.

13.0 Method Performance.[Reserved]

14.0 Pollution Prevention.[Reserved]

15.0 Waste Management.[Reserved]

16.0 References.[Reserved]

17.0 Tables, Diagrams, Flow Charts, and Validation Data

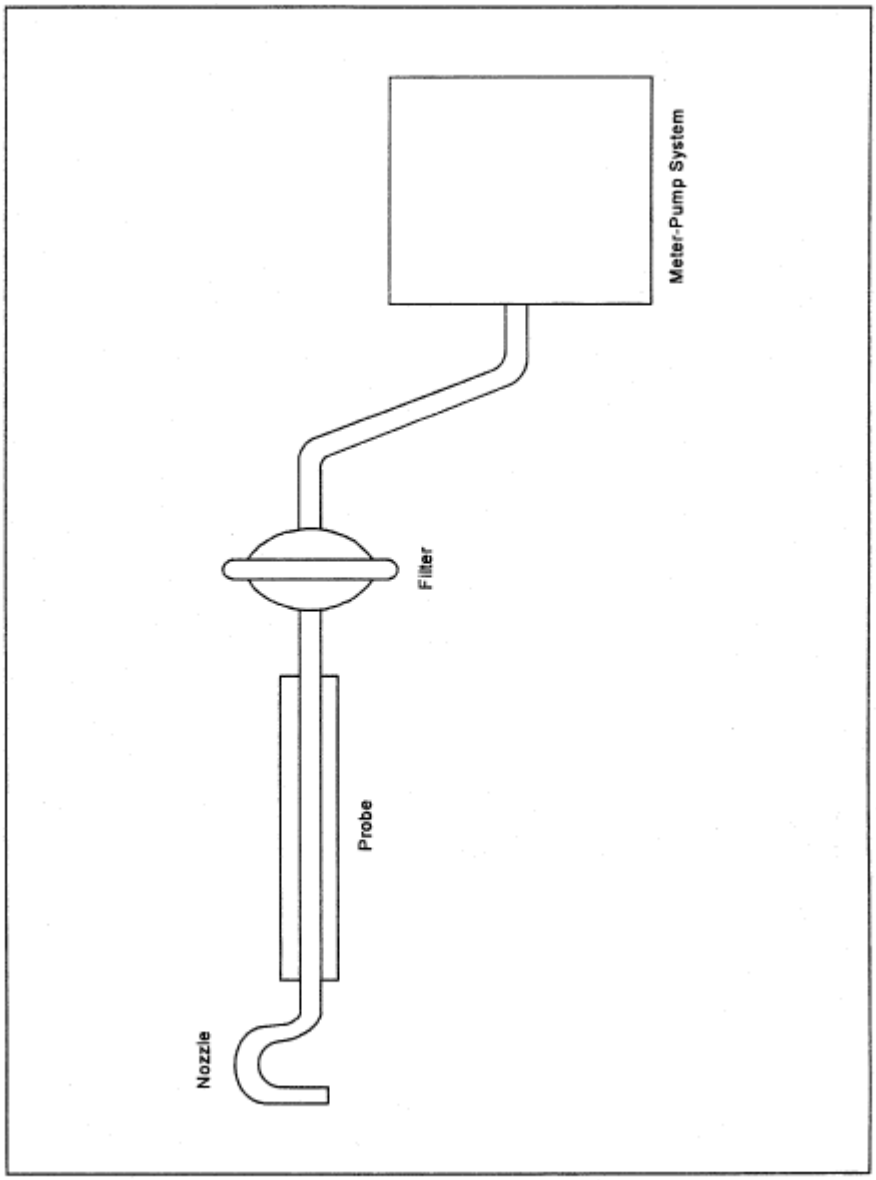

Figure 103-1. Beryllium Screening Method Sampling Train Schematic.

View or download PDF

Method 104—Determination of Beryllium Emissions From Stationary Sources

Note: This method does not include all of the specifications (*e.g.,* equipment and supplies) and procedures (*e.g.,* sampling and analytical) essential to its performance. Some material is incorporated by reference from methods in appendix A to 40 CFR part 60. Therefore, to obtain reliable results, persons using this method should have a thorough knowledge of at least the following additional test methods: Method 1, Method 2, Method 3, and Method 5 in appendix A, part 60.

1.0 Scope and Application

1.1 Analytes.

Analyte	CAS No.	Sensitivity
Beryllium (Be)	7440–41–7	Dependent upon recorder and spectrophotometer.

1.2 Applicability. This method is applicable for the determination of Be emissions in ducts or stacks at stationary sources. Unless otherwise specified, this method is not intended to apply to gas streams other than those emitted directly to the atmosphere without further processing.

1.3 Data Quality Objectives. Adherences to the requirements of this method will enhance the quality of the data obtained from air pollutant sampling methods.

2.0 Summary of Method

2.1 Particulate and gaseous Be emissions are withdrawn isokinetically from the source and are collected on a glass fiber filter and in water. The collected sample is digested in an acid solution and is analyzed by atomic absorption spectrophotometry.

3.0 Definitions[Reserved]

4.0 Interferences

4.1 Matrix Effects. Analysis for Be by flame atomic absorption spectrophotometry is sensitive to the chemical composition and to the physical properties (*e.g.,* viscosity, pH) of the sample. Aluminum and silicon in particular are known to interfere when present in appreciable quantities. The analytical procedure includes (optionally) the use of the Method of Standard Additions to check for these matrix effects, and sample analysis using the Method of Standard Additions if significant matrix effects are found to be present (see Reference 2 in Section 16.0).

5.0 Safety

5.1 Disclaimer. This method may involve hazardous materials, operations, and equipment. This test method may not address all of the safety problems associated with its use. It is the responsibility of the user of this test method to establish appropriate safety and health practices and determine the applicability of regulatory limitations prior to performing this test method.

5.2 Corrosive reagents. The following reagents are hazardous. Personal protective equipment and safe procedures are useful in preventing chemical splashes. If contact occurs, immediately flush with copious amounts of water at least 15 minutes. Remove clothing under shower and decontaminate. Treat residual chemical burn as thermal burn.

5.2.1 Hydrochloric Acid (HC_l). Highly toxic. Vapors are highly irritating to eyes, skin, nose, and lungs, causing severe damage. May cause bronchitis, pneumonia, or edema of lungs. Exposure to concentrations of 0.13 to 0.2 percent can be lethal to humans in a few minutes. Provide ventilation to limit exposure. Reacts with metals, producing hydrogen gas.

5.2.2 Hydrogen Peroxide (H_2O_2). Irritating to eyes, skin, nose, and lungs.

5.2.3 Nitric Acid (HNO_3). Highly corrosive to eyes, skin, nose, and lungs. Vapors cause bronchitis, pneumonia, or edema of lungs. Reaction to inhalation may be delayed as long as 30 hours and still be fatal. Provide ventilation to limit exposure. Strong oxidizer. Hazardous reaction may occur with organic materials such as solvents.

5.2.4 Sodium Hydroxide (NaOH). Causes severe damage to eyes and skin. Inhalation causes irritation to nose, throat, and lungs. Reacts exothermically with limited amounts of water.

5.3 Beryllium is hazardous, and precautions should be taken to minimize exposure.

6.0 Equipment and Supplies

6.1 Sample Collection. Same as Method 5, Section 6.1, with the exception of the following:

6.1.1 Sampling Train. Same as Method 5, Section 6.1.1, with the exception of the following:

6.1.2 Probe Liner. Borosilicate or quartz glass tubing. A heating system capable of maintaining a gas temperature of 120 ±14 °C (248 ±25 °F) at the probe exit during sampling to prevent water condensation may be used.

Note: Do not use metal probe liners.

6.1.3 Filter Holder. Borosilicate glass, with a glass frit filter support and a silicone rubber gasket. Other materials of construction (*e.g.,* stainless steel, Teflon, Viton) may be used, subject to the approval of the Administrator. The holder design shall provide a positive seal against leakage from the outside or around the filter. The holder shall be attached immediately at the outlet of the probe. A heating system capable of maintaining the filter at a minimum temperature in the range of the stack temperature may be used to prevent condensation from occurring.

6.1.4 Impingers. Four Greenburg-Smith impingers connected in series with leak-free ground glass fittings or any similar leak-free noncontaminating fittings. For the first, third, and fourth impingers, use impingers that are modified by replacing the tip with a 13 mm-ID (0.5 in.) glass tube extending to 13 mm (0.5 in.) from the bottom of the flask may be used.

6.2 Sample Recovery. The following items are needed for sample recovery:

6.2.1 Probe Cleaning Rod. At least as long as probe.

6.2.2 Glass Sample Bottles. Leakless, with Teflon-lined caps, 1000 ml.

6.2.3 Petri Dishes. For filter samples, glass or polyethylene, unless otherwise specified by the Administrator.

6.2.4 Graduated Cylinder. 250 ml.

6.2.5 Funnel and Rubber Policeman. To aid in transfer of silica gel to container; not necessary if silica gel is weighed in the field.

6.2.6 Funnel. Glass, to aid in sample recovery.

6.2.7 Plastic Jar. Approximately 300 ml.

6.3 Analysis. The following items are needed for sample analysis:

6.3.1 Atomic Absorption Spectrophotometer. Perkin-Elmer 303, or equivalent, with nitrous oxide/acetylene burner.

6.3.2 Hot Plate.

6.3.3 Perchloric Acid Fume Hood.

7.0 Reagents and Standards

Note: Unless otherwise indicated, it is intended that all reagents conform to the specifications established by the Committee on Analytical Reagents of the American Chemical Society, where such specifications are available; otherwise, use the best available grade.

7.1 Sample Collection. Same as Method 5, Section 7.1, including deionized distilled water conforming to ASTM D 1193–77 or 91 (incorporated by reference—see §61.18), Type 3. The Millipore AA filter is recommended.

7.2 Sample Recovery. Same as Method 5 in appendix A, part 60, Section 7.2, with the addition of the following:

7.2.1 Wash Acid, 50 Percent (V/V) Hydrochloric Acid (HCl). Mix equal volumes of concentrated HCl and water, being careful to add the acid slowly to the water.

7.3 Sample Preparation and Analysis. The following reagents and standards and standards are needed for sample preparation and analysis:

7.3.1 Water. Same as in Section 7.1.

7.3.2. Perchloric Acid ($HClO_4$). Concentrated (70 percent V/V).

7.3.3 Nitric Acid (HNO_3). Concentrated.

7.3.4 Beryllium Powder. Minimum purity 98 percent.

7.3.5 Sulfuric Acid (H_2SO_4) Solution, 12 N. Dilute 33 ml of concentrated $H_2SO_4$to 1 liter with water.

7.3.6 Hydrochloric Acid Solution, 25 Percent HCl (V/V).

7.3.7 Stock Beryllium Standard Solution, 10 µg Be/ml. Dissolve 10.0 mg of Be in 80 ml of 12 N H_2SO_4in a 1000-ml volumetric flask. Dilute to volume with water. This solution is stable for at least one month. Equivalent strength Be stock solutions may be prepared from Be salts such as $BeCl_2$and $Be(NO_3)_2$(98 percent minimum purity).

7.3.8 Working Beryllium Standard Solution, 1 µg Be/ml. Dilute a 10 ml aliquot of the stock beryllium standard solution to 100 ml with 25 percent HCl solution to give a concentration of 1 mg/ml. Prepare this dilute stock solution fresh daily.

8.0 Sample Collection, Preservation, Transport, and Storage

The amount of Be that is collected is generally small, therefore, it is necessary to exercise particular care to prevent contamination or loss of sample.

8.1 Pretest Preparation. Same as Method 5, Section 8.1, except omit Section 8.1.3.

8.2 Preliminary Determinations. Same as Method 5, Section 8.2, with the exception of the following:

8.2.1 Select a nozzle size based on the range of velocity heads to assure that it is not necessary to change the nozzle size in order to maintain isokinetic sampling rates below 28 liters/min (1.0 cfm).

8.2.2 Obtain samples over a period or periods of time that accurately determine the maximum emissions that occur in a 24-hour period. In the case of cyclic operations, perform sufficient sample runs for the accurate determination of the emissions that occur over the duration of the cycle. A minimum sample time of 2 hours per run is recommended.

8.3 Preparation of Sampling Train. Same as Method 5, Section 8.3, with the exception of the following:

8.3.1 Prior to assembly, clean all glassware (probe, impingers, and connectors) by first soaking in wash acid for 2 hours, followed by rinsing with water.

8.3.2 Save a portion of the water for a blank analysis.

8.3.3 Procedures relating to the use of metal probe liners are not applicable.

8.3.4 Probe and filter heating systems are needed only if water condensation is a problem. If this is the case, adjust the heaters to provide a temperature at or above the stack temperature. However, membrane filters such as the Millipore AA are limited to about 107 °C (225 °F). If the stack gas is in excess of about 93 °C (200 °F), consideration should be given to an alternate procedure such as moving the filter holder downstream of the first impinger to insure that the filter does not exceed its temperature limit. After the sampling train has been assembled, turn on and set the probe heating system, if applicable, at the desired operating temperature. Allow time for the temperatures to stabilize. Place crushed ice around the impingers.

Note: An empty impinger may be inserted between the third impinger and the silica gel to remove excess moisture from the sample stream.

8.4 Leak Check Procedures, Sampling Train Operation, and Calculation of Percent Isokinetic. Same as Method 5, Sections 8.4, 8.5, and 8.6, respectively.

8.5 Sample Recovery. Same as Method 5, Section 8.7, except treat the sample as follows: Transfer the probe and impinger assembly to a cleanup area that is clean, protected from the wind, and free of Be contamination. Inspect the train before and during this assembly, and note any abnormal conditions. Treat the sample as follows: Disconnect the probe from the impinger train.

8.5.1 Container No. 1. Same as Method 5, Section 8.7.6.1.

8.5.2 Container No. 2. Place the contents (measured to 1 ml) of the first three impingers into a glass sample bottle. Use the procedures outlined in Section 8.7.6.2 of Method 5, where applicable, to rinse the probe nozzle, probe fitting, probe liner, filter holder, and all glassware between the filter holder and the back half of the third impinger with water. Repeat this procedure with acetone. Place both water and acetone rinse solutions in the sample bottle with the contents of the impingers.

8.5.3 Container No. 3. Same as Method 5, Section 8.7.6.3.

8.6 Blanks.

8.6.1 Water Blank. Save a portion of the water as a blank. Take 200 ml directly from the wash bottle being used and place it in a plastic sample container labeled "H_2O blank."

8.6.2 Filter. Save two filters from each lot of filters used in sampling. Place these filters in a container labeled "filter blank."

8.7 Post-test Glassware Rinsing. If an additional test is desired, the glassware can be carefully double rinsed with water and reassembled. However, if the glassware is out of use more than 2 days, repeat the initial acid wash procedure.

9.0 Quality Control

9.1 Miscellaneous Quality Control Measures.

Section	Quality control measure	Effect
8.4, 10.1	Sampling equipment leak checks and calibration	Ensure accuracy and precision of sampling measurements.
10.2	Spectrophotometer calibration	Ensure linearity of spectrophotometer response to standards.
11.5	Check for matrix effects	Eliminate matrix effects.
11.6	Audit sample analysis	Evaluate analyst's technique and standards preparation.

9.2 Volume Metering System Checks. Same as Method 5, Section 9.2.

10.0 Calibration and Standardization

Note: Maintain a laboratory log of all calibrations.

10.1 Sampling Equipment. Same as Method 5, Section 10.0.

10.2 Preparation of Standard Solutions. Pipet 1, 3, 5, 8, and 10 ml of the 1.0 µg Be/ml working standard solution into separate 100 ml volumetric flasks, and dilute to the mark with water. The total amounts of Be in these standards are 1, 3, 5, 8, and 10 µg, respectively.

10.3 Spectrophotometer and Recorder. The Be response may be measured by either peak height or peak area. Analyze an aliquot of the 10-µg standard at 234.8 nm using a nitrous oxide/acetylene flame. Determine the maximum absorbance of the standard, and set this value to read 90 percent of the recorder full scale.

10.4 Calibration Curve.

10.4.1 After setting the recorder scale, analyze an appropriately sized aliquot of each standard and the BLANK (see Section 11) until two consecutive peaks agree within 3 percent of their average value.

10.4.3 Subtract the average peak height (or peak area) of the blank—which must be less than 2 percent of recorder full scale—from the averaged peak heights of the standards. If the blank absorbance is greater than 2 percent of full-scale, the probable cause is Be contamination of a reagent or carry-over of Be from a previous sample. Prepare the calibration curve by plotting the corrected peak height of each standard solution versus the corresponding total Be weight in the standard (in µg).

10.5 Spectrophotometer Calibration Quality Control. Calculate the least squares slope of the calibration curve. The line must pass through the origin or through a point no further from the origin than ±2 percent of the recorder full scale. Multiply the corrected peak height by the reciprocal of the least squares slope to determine the distance each calibration point lies from the theoretical calibration line. The difference between the calculated concentration values and the actual concentrations (i.e., 1, 3, 5, 8, and 10 µg Be) must be less than 7 percent for all standards.

11.0 Analytical Procedure

11.1 Sample Loss Check. Prior to analysis, check the liquid level in Container No. 2. Note on the analytical data sheet whether leakage occurred during transport. If a noticeable amount of leakage occurred, either void the sample or take steps, subject to the approval of the Administrator, to adjust the final results.

11.2 Glassware Cleaning. Before use, clean all glassware according to the procedure of Section 8.3.1.

11.3 Sample Preparation. The digestion of Be samples is accomplished in part in concentrated $HClO_4$.

Note: The sample must be heated to light brown fumes after the initial HNO3 addition; otherwise, dangerous perchlorates may result from the subsequent $HClO_4$digestion. $HClO_4$should be used only under a hood.

11.3.1 Container No. 1. Transfer the filter and any loose particulate matter from Container No. 1 to a 150-ml beaker. Add 35 ml concentrated HNO_3. To oxidize all organic matter, heat on a hotplate until light brown fumes are evident. Cool to room temperature, and add 5 ml 12 N $H_2SO_4$and 5 ml concentrated $HClO_4$.

11.3.2 Container No. 2. Place a portion of the water and acetone sample into a 150 ml beaker, and put on a hotplate. Add portions of the remainder as evaporation proceeds and evaporate to dryness. Cool the residue, and add 35 ml concentrated HNO_3. To oxidize all organic matter, heat on a hotplate until light brown fumes are evident. Cool to room temperature, and add 5 ml 12 N $H_2SO_4$and 5 ml concentrated $HClO_4$. Then proceed with step 11.3.4.

11.3.3 Final Sample Preparation. Add the sample from Section 11.3.2 to the 150-ml beaker from Section 11.3.1. Replace on a hotplate, and evaporate to dryness in a $HClO_4$hood. Cool the residue to room temperature, add 10.0 ml of 25 percent V/V HCl, and mix to dissolve the residue.

11.3.4 Filter and Water Blanks. Cut each filter into strips, and treat each filter individually as directed in Section 11.3.1. Treat the 200-ml water blank as directed in Section 11.3.2. Combine and treat these blanks as directed in Section 11.3.3.

11.4 Spectrophotometer Preparation. Turn on the power; set the wavelength, slit width, and lamp current; and adjust the background corrector as instructed by the manufacturer's manual for the particular atomic absorption spectrophotometer. Adjust the burner and flame characteristics as necessary.

11.5 Analysis. Calibrate the analytical equipment and develop a calibration curve as outlined in Sections 10.4 and 10.5.

11.5.1 Beryllium Samples. Repeat the procedure used to establish the calibration curve with an appropriately sized aliquot of each sample (from Section 11.3.3) until two consecutive peak heights agree within 3 percent of their average value. The peak height of each sample must be greater than 10 percent of the recorder full scale. If the peak height of the sample is off scale on the recorder, further dilute the original source sample to bring the Be concentration into the calibration range of the spectrophotometer.

11.5.2 Run a blank and standard at least after every five samples to check the spectrophotometer calibration. The peak height of the blank must pass through a point no further from the origin than ±2 percent of the recorder full scale. The difference between the measured concentration of the standard (the product of the corrected peak height and the reciprocal of the least squares slope) and the actual concentration of the standard must be less than 7 percent, or recalibration of the analyzer is required.

11.5.3 Check for Matrix Effects (optional). Use the Method of Standard Additions (see Reference 2 in Section 16.0) to check at least one sample from each source for matrix effects on the Be results. If the results of the Method of Standard Additions procedure used on the single source sample do not agree to within 5 percent of the value obtained by the routine atomic absorption analysis, then reanalyze all samples from the source using the Method of Standard Additions procedure.

11.6 Container No. 2 (Silica Gel). Weigh the spent silica gel (or silica gel plus impinger) to the nearest 0.5 g using a balance. (This step may be conducted in the field.)

12.0 Data Analysis and Calculations

Carry out calculations, retaining at least one extra decimal significant figure beyond that of the acquired data. Round off figures only after the final calculation. Other forms of the equations may be used as long as they give equivalent results.

12.1 Nomenclature.

K_1= 0.3858 °K/mm Hg for metric units.

= 17.64 °R/in. Hg for English units.

K_3= 10^{-6}g/µg for metric units.

= 2.2046 × 10^{-9}lb/µg for English units.

m_{Be}= Total weight of beryllium in the source sample.

P_s= Absolute stack gas pressure, mm Hg (in. Hg).

t = Daily operating time, sec/day.

T_s= Absolute average stack gas temperature, °K (°R).

Vm(std)= Dry gas sample volume at standard conditions, scm (scf).

Vw(std)= Volume of water vapor at standard conditions, scm (scf).

12.2 Average Dry Gas Meter Temperature and Average Orifice Pressure Drop, Dry Gas Volume, Volume of Water Vapor Condensed, Moisture Content, Isokinetic Variation, and Stack Gas Velocity and Volumetric Flow Rate. Same as Method 5, Sections 12.2 through 12.5, 12.11, and 12.12, respectively.

12.3 Total Beryllium. For each source sample, correct the average maximum absorbance of the two consecutive samples whose peak heights agree within 3 percent of their average for the contribution of the solution blank (see Sections 11.3.4 and 11.5.2). Correcting for any dilutions if necessary, use the calibration curve and these corrected averages to determine the total weight of Be in each source sample.

12.4 Beryllium Emission Rate. Calculate the daily Hg emission rate, R, using Equation 104–1. For continuous operations, the operating time is equal to 86,400 seconds per day. For cyclic operations, use only the time per day each stack is in operation. The total Hg emission rate from a source will be the summation of results from all stacks.

$$R = \frac{K_1 K_3 t m_{Be} P_s v_s A_s}{T_s\left(V_{m(std)} + V_{w(std)}\right)} \qquad \text{Eq. 104-1}$$

12.5 Determination of Compliance. Each performance test consists of three sample runs. For the purpose of determining compliance with an applicable national emission standard, use the average of the results of all sample runs.

13.0 Method Performance.[Reserved]

14.0 Pollution Prevention.[Reserved]

15.0 Waste Management.[Reserved]

16.0 References

Same as References 1, 2, and 4–11 of Section 16.0 of Method 101 with the addition of the following:

1. Amos, M.D., and J.B. Willis. Use of High-Temperature Pre-Mixed Flames in Atomic Absorption Spectroscopy. Spectrochim. Acta. 22:1325. 1966.

2. Fleet, B., K.V. Liberty, and T. S. West. A Study of Some Matrix Effects in the Determination of Beryllium by Atomic Absorption Spectroscopy in the Nitrous Oxide-Acetylene Flame. Talanta 17:203. 1970.

17.0 Tables, Diagrams, Flowcharts, And Validation Data[Reserved]

Method 105—Determination of Mercury in Wastewater Treatment Plant Sewage Sludges

Note: This method does not include all of the specifications (*e.g.,* equipment and supplies) and procedures (*e.g.,* sampling and analytical) essential to its performance. Some material is incorporated by reference from other methods in this part. Therefore, to obtain reliable results, persons using this method should also have a thorough knowledge of at least the following additional test methods: Method 101 and Method 101A.

1.0 Scope and Application

1.1 Analytes.

Analyte	CAS No.	Sensitivity
Mercury (Hg)	7439–97–6	Dependent upon spectrophotometer and recorder.

1.2 Applicability. This method is applicable for the determination of total organic and inorganic Hg content in sewage sludges.

1.3 Data Quality Objectives. Adherence to the requirements of this method will enhance the quality of the data obtained from air pollutant sampling methods.

2.0 Summary of Method

2.1 Time-composite sludge samples are withdrawn from the conveyor belt subsequent to dewatering and before incineration or drying. A weighed portion of the sludge is digested in aqua regia and is oxidized by potassium permanganate ($KMnO_4$). Mercury in the digested sample is then measured by the conventional spectrophotometric cold-vapor technique.

3.0 Definitions[Reserved]

4.0 Interferences[Reserved]

5.0 Safety

5.1 Disclaimer. This method may involve hazardous materials, operations, and equipment. This test method may not address all of the safety problems associated with its use. It is the responsibility of the user of this test method to establish appropriate safety and health practices and determine the applicability of regulatory limitations prior to performing this test method.

5.2 Corrosive Reagents. The following reagents are hazardous. Personal protective equipment and safe procedures are useful in preventing chemical splashes. If contact occurs, immediately flush with copious amounts of water at least 15 minutes. Remove clothing under shower and decontaminate. Treat residual chemical burn as thermal burn.

5.2.1 Hydrochloric Acid (HCl). Highly toxic. Vapors are highly irritating to eyes, skin, nose, and lungs, causing severe damage. May cause bronchitis, pneumonia, or edema of lungs. Exposure to concentrations of 0.13 to 0.2 percent can be lethal to humans in a few minutes. Provide ventilation to limit exposure. Reacts with metals, producing hydrogen gas.

5.2.2 Nitric Acid (HNO_3). Highly corrosive to eyes, skin, nose, and lungs. Vapors cause bronchitis, pneumonia, or edema of lungs. Reaction to inhalation may be delayed as long as 30 hours and still be fatal. Provide ventilation to limit exposure. Strong oxidizer. Hazardous reaction may occur with organic materials such as solvents.

6.0 Equipment and Supplies

6.1 Sample Collection and Mixing. The following items are required for collection and mixing of the sludge samples:

6.1.1 Container. Plastic, 50-liter.

6.1.2 Scoop. To remove 950-ml (1 quart.) sludge sample.

6.1.3 Mixer. Mortar mixer, wheelbarrow-type, 57-liter (or equivalent) with electricity-driven motor.

6.1.4 Blender. Waring-type, 2-liter.

6.1.5 Scoop. To remove 100-ml and 20-ml samples of blended sludge.

6.1.6 Erlenmeyer Flasks. Four, 125-ml.

6.1.7 Beakers. Glass beakers in the following sizes: 50 ml (1), 200 ml (1), 400 ml (2).

6.2 Sample Preparation and Analysis. Same as Method 101, Section 6.3, with the addition of the following:

6.2.1 Hot Plate.

6.2.2 Desiccator.

6.2.3 Filter Paper. S and S No. 588 (or equivalent).

6.2.4 Beakers. Glass beakers, 200 ml and 400 ml (2 each).

7.0 Reagents and Standards

Note: Unless otherwise indicated, it is intended that all reagents conform to the specifications established by the Committee on Analytical Reagents of the American Chemical Society, where such specifications are available; otherwise, use the best available grade.

7.1 Sample Analysis. Same as Method 101A, Section 7.2, with the following additions and exceptions:

7.1.1 Hydrochloric Acid. The concentrated HCl specified in Method 101A, Section 7.2.4, is not required.

7.1.2 Aqua Regia. Prepare immediately before use. Carefully add one volume of concentrated $HNO_3$to three volumes of concentrated HCl.

8.0 Sample Collection, Preservation, Storage, and Transport

8.1 Sludge Sampling. Withdraw equal volume increments of sludge [for a total of at least 15 liters (16 quarts)] at intervals of 30 min over an 8-hr period, and combine in a rigid plastic container.

8.2 Sludge Mixing. Transfer the entire 15-liter sample to a mortar mixer. Mix the sample for a minimum of 30 min at 30 rpm. Take six 100-ml portions of sludge, and combine in a 2-liter blender. Blend sludge for 5 min; add water as necessary to give a fluid consistency. Immediately after stopping the blender, withdraw four 20-ml portions of blended sludge, and place them in separate, tared 125-ml Erlenmeyer flasks. Reweigh each flask to determine the exact amount of sludge added.

8.3 Sample Holding Time. Samples shall be analyzed within the time specified in the applicable subpart of the regulations.

9.0 Quality Control

Section	Quality control measure	Effect
10.0	Spectrophotometer calibration	Ensure linearity of spectrophotometer response to standards.
11.0	Check for matrix effects	Eliminate matrix effects.

10.0 Calibration and Standardization

Same as Method 101A, Section 10.2.

11.0 Analytical Procedures

11.1 Solids Content of Blended Sludge. Dry one of the 20-ml blended samples from Section 8.2 in an oven at 105 °C (221 °F) to constant weight. Cool in a desiccator, weigh and record the dry weight of the sample.

11.2 Aqua Regia Digestion of Blended Samples.

11.2.1 To each of the three remaining 20-ml samples from Section 8.2 add 25 ml of aqua regia, and digest the on a hot plate at low heat (do not boil) for 30 min, or until samples are a pale yellow-brown color and are void of the dark brown color characteristic of organic matter. Remove from hotplate and allow to cool.

11.2.2 Filter each digested sample separately through an S and S No. 588 filter or equivalent, and rinse the filter contents with 50 ml of water. Transfer the filtrate and filter washing to a 100-ml volumetric flask, and carefully dilute to volume with water.

11.3 Solids Content of the Sludge Before Blending. Remove two 100-ml portions of mixed sludge from the mortar mixer and place in separate, tared 400-ml beakers. Reweigh each beaker to determine the exact amount of sludge added. Dry in oven at 105 °C (221 °F) and cool in a desiccator to constant weight.

11.4 Analysis for Mercury. Analyze the three aqua regia-digested samples using the procedures outlined in Method 101A, Section 11.0.

12.0 Data Analysis and Calculations

12.1 Nomenclature.

C_m= Concentration of Hg in the digested sample, µg/g.

F_{sb}= Weight fraction of solids in the blended sludge.

F_{sm}= Weight fraction of solids in the collected sludge after mixing.

M = Hg content of the sewage sludge (on a dry basis), µg/g.

m = Mass of Hg in the aliquot of digested sample analyzed, µg.

n = number of digested samples (specified in Section 11.2 as three).

V_a= Volume of digested sample analyzed, ml.

V_s= Volume of digested sample, ml.

W_b= Weight of empty sample beaker, g.

W_{bs}= Weight of sample beaker and sample, g.

W_{bd}= Weight of sample beaker and sample after drying, g.

W_f= Weight of empty sample flask, g.

W_{fd}= Weight of sample flask and sample after drying, g.

W_{fs}= Weight of sample flask and sample, g.

12.2 Mercury Content of Digested Sample (Wet Basis).

12.2.1 For each sample analyzed for Hg content, calculate the arithmetic mean maximum absorbance of the two consecutive samples whose peak heights agree ±3 percent of their average. Correct this average value for the contribution of the blank. Use the calibration curve and these corrected averages to determine the final Hg concentration in the solution cell for each sludge sample.

12.2.2 Calculate the average Hg concentration of the digested samples by correcting for any dilutions made to bring the sample into the working range of the spectrophotometer and for the weight of the sludge portion digested, using Equation 105–1.

$$\bar{C}_m = \sum_{i=1}^{n} \left[\frac{mV_s}{V_a\left(W_{fs} - W_f\right)} \right]_i \qquad \text{Eq. 105-1}$$

12.3 Solids Content of Blended Sludge. Determine the solids content of the blended sludge using Equation 105–2.

$$F_{sb} = 1 - \frac{W_{fs} - W_{fd}}{W_{fs} - W_f} \qquad \text{Eq. 105-2}$$

12.4 Solids Content of Bulk Sample (before blending but, after mixing in mortar mixer). Determine the solids content of each 100 ml aliquot (Section 11.3), and average the results.

$$F_{sm} = 1 - \frac{W_{bs} - W_{bd}}{W_{bs} - W_b} \qquad \text{Eq. 105-3}$$

12.5 Mercury Content of Bulk Sample (Dry Basis). Average the results from the three samples from each 8-hr composite sample, and calculate the Hg concentration of the composite sample on a dry basis.

$$M = \frac{\bar{C}_m}{F_{sb}} \qquad \text{Eq. 105-4}$$

13.0 Method Performance

13.1 Range. The range of this method is 0.2 to 5 micrograms per gram; it may be extended by increasing or decreasing sample size.

14.0 Pollution Prevention.[Reserved]

15.0 Waste Management.[Reserved]

16.0 References

1. Bishop, J.N. Mercury in Sediments. Ontario Water Resources Commission. Toronto, Ontario, Canada. 1971.

2. Salma, M. Private Communication. EPA California/Nevada Basin Office. Alameda, California.

3. Hatch, W.R. and W.L. Ott. Determination of Sub-Microgram Quantities of Mercury by Atomic Absorption Spectrophotometry. Analytical Chemistry. 40:2085. 1968.

4. Bradenberger, H., and H. Bader. The Determination of Nanogram Levels of Mercury in Solution by a Flameless Atomic Absorption Technique. Atomic Absorption Newsletter. 6:101. 1967.

5. Analytical Quality Control Laboratory (AQCL). Mercury in Sediment (Cold Vapor Technique) (Provisional Method). U.S. Environmental Protection Agency. Cincinnati, Ohio. April 1972.

6. Kopp, J.F., M.C. Longbottom, and L.B. Lobring. “Cold Vapor” Method for Determining Mercury. Journal AWWA. 64(1):20–25. 1972.

7. Manual of Methods for Chemical Analysis of Water and Wastes. U.S. Environmental Protection Agency. Cincinnati, Ohio. Publication No. EPA–624/2–74–003. December 1974. pp. 118–138.

8. Mitchell, W.J., M.R. Midgett, J. Suggs, R.J. Velton, and D. Albrink. Sampling and Homogenizing Sewage for Analysis. Environmental Monitoring and Support Laboratory, Office of Research and Development, U.S. Environmental Protection Agency. Research Triangle Park, N.C. March 1979. p. 7.

17.0 Tables, Diagrams, Flowcharts, and Validation Data.[Reserved]

Method 106—Determination of Vinyl Chloride Emissions From Stationary Sources

1.0 Scope and Application

1.1 Analytes.

Analyte	CAS No.	Sensitivity
Vinyl Chloride (CH_2:CHCl)	75–01–4	Dependent upon analytical equipment.

1.2 Applicability. This method is applicable for the determination of vinyl chloride emissions from ethylene dichloride, vinyl chloride, and polyvinyl chloride manufacturing processes. This method does not measure vinyl chloride contained in particulate matter.

1.3 Data Quality Objectives. Adherence to the requirements of this method will enhance the quality of the data obtained from air pollutant sampling methods.

2.0 Summary of Method

2.1 An integrated bag sample of stack gas containing vinyl chloride is subjected to GC analysis using a flame ionization detector (FID).

3.0 Definitions.[Reserved]

4.0 Interferences

4.1 Resolution interferences of vinyl chloride may be encountered on some sources. Therefore, the chromatograph operator should select the column and operating parameters best suited to the particular analysis requirements. The selection made is subject to approval of the Administrator. Approval is automatic, provided that confirming data are produced through an adequate supplemental analytical technique, and that the data are available for review by the Administrator. An example of this would be analysis with a different column or GC/mass spectroscopy.

5.0 Safety

5.1 Disclaimer. This method may involve hazardous materials, operations, and equipment. This test method may not address all of the safety problems associated with its use. It is the responsibility of the user of this test method to establish appropriate safety and health practices and determine the applicability of regulatory limitations prior to performing this test method.

5.2 Toxic Analyte. Care must be exercised to prevent exposure of sampling personnel to vinyl chloride, which is a carcinogen.

6.0 Equipment and Supplies

6.1 Sample Collection (see Figure 106–1). The sampling train consists of the following components:

6.1.1 Probe. Stainless steel, borosilicate glass, Teflon tubing (as stack temperature permits), or equivalent, equipped with a glass wool plug to remove particulate matter.

6.1.2 Sample Lines. Teflon, 6.4-mm outside diameter, of sufficient length to connect probe to bag. Use a new unused piece for each series of bag samples that constitutes an emission test, and discard upon completion of the test.

6.1.3 Quick Connects. Stainless steel, male (2) and female (2), with ball checks (one pair without), located as shown in Figure 106–1.

6.1.4 Tedlar Bags. 50- to 100-liter capacity, to contain sample. Aluminized Mylar bags may be used if the samples are analyzed within 24 hours of collection.

6.1.5 Bag Containers. Rigid leak-proof containers for sample bags, with covering to protect contents from sunlight.

6.1.6 Needle Valve. To adjust sample flow rates.

6.1.7 Pump. Leak-free, with minimum of 2-liter/min capacity.

6.1.8 Charcoal Tube. To prevent admission of vinyl chloride and other organics to the atmosphere in the vicinity of samplers.

6.1.9 Flowmeter. For observing sampling flow rate; capable of measuring a flow range from 0.10 to 1.00 liter/min.

6.1.10 Connecting Tubing. Teflon, 6.4-mm outside diameter, to assemble sampling train (Figure 106–1).

6.1.11 Tubing Fittings and Connectors. Teflon or stainless steel, to assemble sampling training.

6.2 Sample Recovery. Teflon tubing, 6.4-mm outside diameter, to connect bag to GC sample loop. Use a new unused piece for each series of bag samples that constitutes an emission test, and discard upon conclusion of analysis of those bags.

6.3 Analysis. The following equipment is required:

6.3.1 Gas Chromatograph. With FID potentiometric strip chart recorder and 1.0 to 5.0-ml heated sampling loop in automatic sample valve. The chromatographic system shall be capable of producing a response to 0.1-ppmv vinyl chloride that is at least as great as the average noise level. (Response is measured from the average value of the base line to the maximum of the wave form, while standard operating conditions are in use.)

6.3.2 Chromatographic Columns. Columns as listed below. Other columns may be used provided that the precision and accuracy of the analysis of vinyl chloride standards are not impaired and that information is available for review confirming that there is adequate resolution of vinyl chloride peak. (Adequate resolution is defined as an area overlap of not more than 10 percent of the vinyl chloride peak by an interferent peak. Calculation of area overlap is explained in Procedure 1 of appendix C to this part: “Determination of Adequate Chromatographic Peak Resolution.”)

6.3.2.1 Column A. Stainless steel, 2.0 m by 3.2 mm, containing 80/100-mesh Chromasorb 102.

6.3.2.2 Column B. Stainless steel, 2.0 m by 3.2 mm, containing 20 percent GE SF–96 on 60/ip-mesh Chromasorb P AW; or stainless steel, 1.0 m by 3.2 mm containing 80/100-mesh Porapak T. Column B is required as a secondary column if acetaldehyde is present. If used, column B is placed after column A. The combined columns should be operated at 120 °C (250 °F).

6.3.3 Rate Meters (2). Rotameter , or equivalent, 100-ml/min capacity, with flow control valves.

6.3.4 Gas Regulators. For required gas cylinders.

6.3.5 Temperature Sensor. Accurate to ±1 °C (±2 °F), to measure temperature of heated sample loop at time of sample injection.

6.3.6 Barometer. Accurate to ±5 mm Hg, to measure atmospheric pressure around GC during sample analysis.

6.3.7 Pump. Leak-free, with minimum of 100-ml/min capacity.

6.3.8 Recorder. Strip chart type, optionally equipped with either disc or electronic integrator.

6.3.9 Planimeter. Optional, in place of disc or electronic integrator on recorder, to measure chromatograph peak areas.

6.4 Calibration and Standardization.

6.4.1 Tubing. Teflon, 6.4-mm outside diameter, separate pieces marked for each calibration concentration.

Note: The following items are required only if the optional standard gas preparation procedures (Section 10.1) are followed.

6.4.2 Tedlar Bags. Sixteen-inch-square size, with valve; separate bag marked for each calibration concentration.

6.4.3 Syringes. 0.5-ml and 50-µl, gas tight, individually calibrated to dispense gaseous vinyl chloride.

6.4.4 Dry Gas Meter with Temperature and Pressure Gauges. Singer Model DTM–115 with 802 index, or equivalent, to meter nitrogen in preparation of standard gas mixtures, calibrated at the flow rate used to prepare standards.

7.0 Reagents and Standards

7.1 Analysis. The following reagents are required for analysis.

7.1.1 Helium or Nitrogen. Purity 99.9995 percent or greater, for chromatographic carrier gas.

7.1.2 Hydrogen. Purity 99.9995 percent or greater.

7.1.3 Oxygen or Air. Either oxygen (purity 99.99 percent or greater) or air (less than 0.1 ppmv total hydrocarbon content), as required by detector.

7.2 Calibration. Use one of the following options: either Sections 7.2.1 and 7.2.2, or Section 7.2.3.

7.2.1 Vinyl Chloride. Pure vinyl chloride gas certified by the manufacturer to contain a minimum of 99.9 percent vinyl chloride. If the gas manufacturer maintains a bulk cylinder supply of 99.9+ percent vinyl chloride, the certification analysis may have been performed on this supply, rather than on each gas cylinder prepared from this bulk supply. The date of gas cylinder preparation and the certified analysis must have been affixed to the cylinder before shipment from the gas manufacturer to the buyer.

7.2.2 Nitrogen. Same as described in Section 7.1.1.

7.2.3 Cylinder Standards. Gas mixture standards (50-,10-, and 5 ppmv vinyl chloride) in nitrogen cylinders may be used to directly prepare a chromatograph calibration curve as described in Section 10.3 if the following conditions are met: (a) The manufacturer certifies the gas composition with an accuracy of ±3 percent or better. (b) The manufacturer recommends a maximum shelf life over which the gas concentration does not change by greater than ±5 percent from the certified value. (c) The manufacturer affixes the date of

gas cylinder preparation, certified vinyl chloride concentration, and recommended maximum shelf to the cylinder before shipment to the buyer.

7.2.3.1 Cylinder Standards Certification. The manufacturer shall certify the concentration of vinyl chloride in nitrogen in each cylinder by (a) directly analyzing each cylinder and (b) calibrating his analytical procedure on the day of cylinder analysis. To calibrate his analytical procedure, the manufacturer shall use as a minimum, a three point calibration curve. It is recommended that the manufacturer maintain (1) a high concentration calibration standard (between 50 and 100 ppmv) to prepare his calibration curve by an appropriate dilution technique and (2) a low-concentration calibration standard (between 5 and 10 ppmv) to verify the dilution technique used. If the difference between the apparent concentration read from the calibration curve and the true concentration assigned to the low-concentration calibration standard exceeds 5 percent of the true concentration, the manufacturer shall determine the source of error and correct it, then repeat the three-point calibration.

7.2.3.2 Verification of Manufacturer's Calibration Standards. Before using a standard, the manufacturer shall verify each calibration standard (a) by comparing it to gas mixtures prepared (with 99 mole percent vinyl chloride) in accordance with the procedure described in Section 7.2.1 or (b) calibrating it against vinyl chloride cylinder Standard Reference Materials (SRM's) prepared by the National Institute of Standards and Technology, if such SRM's are available. The agreement between the initially determined concentration value and the verification concentration value must be ±5 percent. The manufacturer must reverify all calibration standards on a time interval consistent with the shelf life of the cylinder standards sold.

7.2.4 Audit Cylinder Standards.

7.2.4.1 Gas mixture standards with concentrations known only to the person supervising the analysis of samples. The concentrations of the audit cylinders should be: one low-concentration cylinder in the range of 5 to 20 ppmv vinyl chloride and one high-concentration cylinder in the range of 20 to 50 ppmv. When available, obtain audit samples from the appropriate EPA Regional Office or from the responsible enforcement authority.

Note: The responsible enforcement agency should be notified at least 30 days prior to the test date to allow sufficient time for sample delivery.

7.2.4.2 Alternatively, audit cylinders obtained from a commercial gas manufacturer may be used provided: (a) the gas meets the conditions described in Section 7.2.3, (b) the gas manufacturer certifies the audit cylinder as described in Section 7.2.3.1, and (c) the gas manufacturer obtains an independent analysis of the audit cylinders to verify this analysis. Independent analysis is defined here to mean analysis performed by an individual different than the individual who performs the gas manufacturer's analysis, while using calibration standards and analysis equipment different from those used for the gas manufacturer's analysis. Verification is complete and acceptable when the independent analysis concentration is within 5 percent of the gas manufacturer's concentration.

8.0 Sample Collection, Preservation, Storage, and Transport

Note: Performance of this method should not be attempted by persons unfamiliar with the operation of a gas chromatograph (GC) nor by those who are unfamiliar with source sampling, because knowledge beyond the scope of this presentation is required.

8.1 Bag Leak-Check. The following leak-check procedure is recommended, but not required, prior to sample collection. The post-test leak-check procedure is mandatory. Connect a water manometer and pressurize the bag to 5 to 10 cm H_2O (2 to 4 in. H_2O). Allow to stand for 10 min. Any displacement in the water manometer indicates a leak. Also, check the rigid container for leaks in this manner.

Note: An alternative leak-check method is to pressurize the bag to 5 to 10 cm H2O and allow it to stand overnight. A deflated bag indicates a leak. For each sample bag in its rigid container, place a rotameter in line between the bag and the pump inlet. Evacuate the bag. Failure of the rotameter to register zero flow when the bag appears to be empty indicates a leak.

8.2 Sample Collection. Assemble the sample train as shown in Figure 106–1. Join the quick connects as illustrated, and determine that all connection between the bag and the probe are tight. Place the end of the probe at the centroid of the stack and start the pump with the needle valve adjusted to yield a flow that will fill over 50 percent of bag volume in the specific sample period. After allowing sufficient time to purge the line several times, change the vacuum line from the container to the bag and evacuate the bag until the rotameter indicates no flow. Then reposition the sample and vacuum lines and begin the actual sampling, keeping the rate proportional to the stack velocity. At all times, direct the gas exiting the rotameter away from sampling personnel. At the end of the sample period, shut off the pump, disconnect the sample line from the bag, and disconnect the vacuum line from the bag container. Protect the bag container from sunlight.

8.3 Sample Storage. Keep the sample bags out of direct sunlight. When at all possible, analysis is to be performed within 24 hours, but in no case in excess of 72 hours of sample collection. Aluminized Mylar bag samples must be analyzed within 24 hours.

8.4 Post-test Bag Leak-Check. Subsequent to recovery and analysis of the sample, leak-check the sample bag according to the procedure outlined in Section 8.1.

9.0 Quality Control

9.1 Miscellaneous Quality Control

Section	Quality control measure	Effect
10.3	Chromatograph calibration	Ensure precision and accuracy of chromatograph.
11.1	Audit sample analysis	Evaluate analytical technique and standards preparation.

9.2 Immediately after the preparation of the calibration curve and prior to the sample analyses, perform the analysis audit described in appendix C, Procedure 2: “Procedure for Field Auditing GC Analysis.”

10.0 Calibration and Standardization

Note: Maintain a laboratory log of all calibrations.

10.1 Preparation of Vinyl Chloride Standard Gas Mixtures. (Optional Procedure-delete if cylinder standards are used.) Evacuate a 16-inch square Tedlar bag that has passed a leak-check (described in Section 8.1) and meter in 5.0 liters of nitrogen. While the bag is filling, use the 0.5-ml syringe to inject 250 µl of 99.9+ percent vinyl chloride gas through the wall of the bag. Upon withdrawing the syringe, immediately cover the resulting hole with a piece of adhesive tape. The bag now contains a vinyl chloride concentration of 50 ppmv. In a like manner use the 50 µl syringe to prepare gas mixtures having 10-and 5-ppmv vinyl chloride concentrations. Place each bag on a smooth surface and alternately depress opposite sides of the bag 50 times to further mix the gases. These gas mixture standards may be used for 10 days from the date of preparation, after which time new gas mixtures must be prepared. (Caution: Contamination may be a problem when a bag is reused if the new gas mixture standard is a lower concentration than the previous gas mixture standard.)

10.2 Determination of Vinyl Chloride Retention Time. (This section can be performed simultaneously with Section 10.3.) Establish chromatograph conditions identical with those in Section 11.3. Determine proper attenuator position. Flush the sampling loop with helium or nitrogen and activate the sample valve. Record the injection time, sample loop temperature, column temperature, carrier gas flow rate, chart speed, and attenuator setting. Record peaks and detector responses that occur in the absence of vinyl chloride. Maintain conditions with the equipment plumbing arranged identically to Section 11.2, and flush the sample loop for 30 seconds at the rate of 100 ml/min with one of the vinyl chloride calibration mixtures. Then activate the sample valve. Record the injection time. Select the peak that corresponds to vinyl chloride. Measure the distance on the chart from the injection time to the time at which the peak maximum occurs.

This quantity divided by the chart speed is defined as the retention time. Since other organics may be present in the sample, positive identification of the vinyl chloride peak must be made.

10.3 Preparation of Chromatograph Calibration Curve. Make a GC measurement of each gas mixture standard (described in Section 7.2.3 or 10.1) using conditions identical to those listed in Sections 11.2 and 11.3. Flush the sampling loop for 30 seconds at the rate of 100 ml/min with one of the standard mixtures, and activate the sample valve. Record the concentration of vinyl chloride injected (C_c), attenuator setting, chart speed, peak area, sample loop temperature, column temperature, carrier gas flow rate, and retention time. Record the barometric pressure. Calculate A_c, the peak area multiplied by the attenuator setting. Repeat until two consecutive injection areas are within 5 percent, then plot the average of those two values versus C_c. When the other standard gas mixtures have been similarly analyzed and plotted, draw a straight line through the points derived by the least squares method. Perform calibration daily, or before and after the analysis of each emission test set of bag samples, whichever is more frequent. For each group of sample analyses, use the average of the two calibration curves which bracket that group to determine the respective sample concentrations. If the two calibration curves differ by more than 5 percent from their mean value, then report the final results by both calibration curves.

11.0 Analytical Procedure

11.1 Audit Sample Analysis. Immediately after the preparation of the calibration curve and prior to the sample analyses, perform the analysis audit described in Procedure 2 of appendix C to this part: “Procedure for Field Auditing GC Analysis.”

11.2 Sample Recovery. With a new piece of Teflon tubing identified for that bag, connect a bag inlet valve to the gas chromatograph sample valve. Switch the valve to receive gas from the bag through the sample loop. Arrange the equipment so the sample gas passes from the sample valve to 100-ml/min rotameter with flow control valve followed by a charcoal tube and a 1-in. H_2O pressure gauge. Maintain the sample flow either by a vacuum pump or container pressurization if the collection bag remains in the rigid container. After sample loop purging is ceased, allow the pressure gauge to return to zero before activating the gas sampling valve.

11.3 Analysis.

11.3.1 Set the column temperature to 100 °C (210 °F) and the detector temperature to 150 °C (300 °F). When optimum hydrogen and oxygen (or air) flow rates have been determined, verify and maintain these flow rates during all chromatography operations. Using helium or nitrogen as the carrier gas, establish a flow rate in the range consistent with the manufacturer's requirements for satisfactory detector operation. A flow rate of approximately 40 ml/min should produce adequate separations. Observe the base line periodically and determine that the noise level has stabilized and that base line drift has ceased. Purge the sample loop for 30 seconds at the rate of 100 ml/min, shut off flow, allow the sample loop pressure to reach atmospheric pressure as indicated by the H_2O manometer, then activate the sample valve. Record the injection time (the position of the pen on the chart at the time of sample injection), sample number, sample loop temperature, column temperature, carrier gas flow rate, chart speed, and attenuator setting. Record the barometric pressure. From the chart, note the peak having the retention time corresponding to vinyl chloride as determined in Section 10.2. Measure the vinyl chloride peak area, A_m, by use of a disc integrator, electronic integrator, or a planimeter. Measure and record the peak heights, H_m. Record $A_m$and retention time. Repeat the injection at least two times or until two consecutive values for the total area of the vinyl chloride peak agree within 5 percent of their average. Use the average value for these two total areas to compute the bag concentration.

11.3.2 Compare the ratio of $H_m$to $A_m$for the vinyl chloride sample with the same ratio for the standard peak that is closest in height. If these ratios differ by more than 10 percent, the vinyl chloride peak may not be pure (possibly acetaldehyde is present) and the secondary column should be employed (see Section 6.3.2.2).

11.4 Determination of Bag Water Vapor Content. Measure the ambient temperature and barometric pressure near the bag. From a water saturation vapor pressure table, determine and record the water vapor content of the bag, B_{wb}, as a decimal figure. (Assume the relative humidity to be 100 percent unless a lesser value is known.)

12.0 Calculations and Data Analysis

12.1 Nomenclature.

A_m= Measured peak area.

A_f= Attenuation factor.

B_{wb}= Water vapor content of the bag sample, as analyzed, volume fraction.

C_b= Concentration of vinyl chloride in the bag, ppmv.

C_c= Concentration of vinyl chloride in the standard sample, ppmv.

P_i= Laboratory pressure at time of analysis, mm Hg.

P_r= Reference pressure, the laboratory pressure recorded during calibration, mm Hg.

T_i= Absolute sample loop temperature at the time of analysis, °K (°R).

T_r= Reference temperature, the sample loop temperature recorded during calibration, °K (°R).

12.2 Sample Peak Area. Determine the sample peak area, A_c, as follows:

$$A_c = A_m A_f \qquad \text{Eq. 106-1}$$

12.3 Vinyl Chloride Concentration. From the calibration curves prepared in Section 10.3, determine the average concentration value of vinyl chloride, C_c, that corresponds to A_c, the sample peak area. Calculate the concentration of vinyl chloride in the bag, C_b, as follows:

$$C_b = \frac{C_c P_r T_i}{P_i T_r \left(1 - B_{wb}\right)} \qquad \text{Eq. 106-2}$$

13.0 Method Performance

13.1 Analytical Range. This method is designed for the 0.1 to 50 parts per million by volume (ppmv) range. However, common gas chromatograph (GC) instruments are capable of detecting 0.02 ppmv vinyl chloride. With proper calibration, the upper limit may be extended as needed.

14.0 Pollution Prevention,[Reserved]

15.0 Waste Management,[Reserved]

16.0 References

1. Brown D.W., E.W. Loy, and M.H. Stephenson. Vinyl Chloride Monitoring Near the B. F. Goodrich Chemical Company in Louisville, KY. Region IV, U.S. Environmental Protection Agency, Surveillance and Analysis Division, Athens, GA. June 24, 1974.

2. G.D. Clayton and Associates. Evaluation of a Collection and Analytical Procedure for Vinyl Chloride in Air. U.S. Environmental Protection Agency, Research Triangle Park, N.C. EPA Contract No. 68–02–1408, Task Order No. 2, EPA Report No. 75–VCL–1. December 13, 1974.

3. Midwest Research Institute. Standardization of Stationary Source Emission Method for Vinyl Chloride. U.S. Environmental Protection Agency, Research Triangle Park, N.C. Publication No. EPA–600/4–77–026. May 1977.

4. Scheil, G. and M.C. Sharp. Collaborative Testing of EPA Method 106 (Vinyl Chloride) that Will Provide for a Standardized Stationary Source Emission Measurement Method. U.S. Environmental Protection Agency, Research Triangle Park, N.C. Publication No. EPA 600/4–78–058. October 1978.

17.0 Tables, Diagrams Flowcharts, and Validation Data.

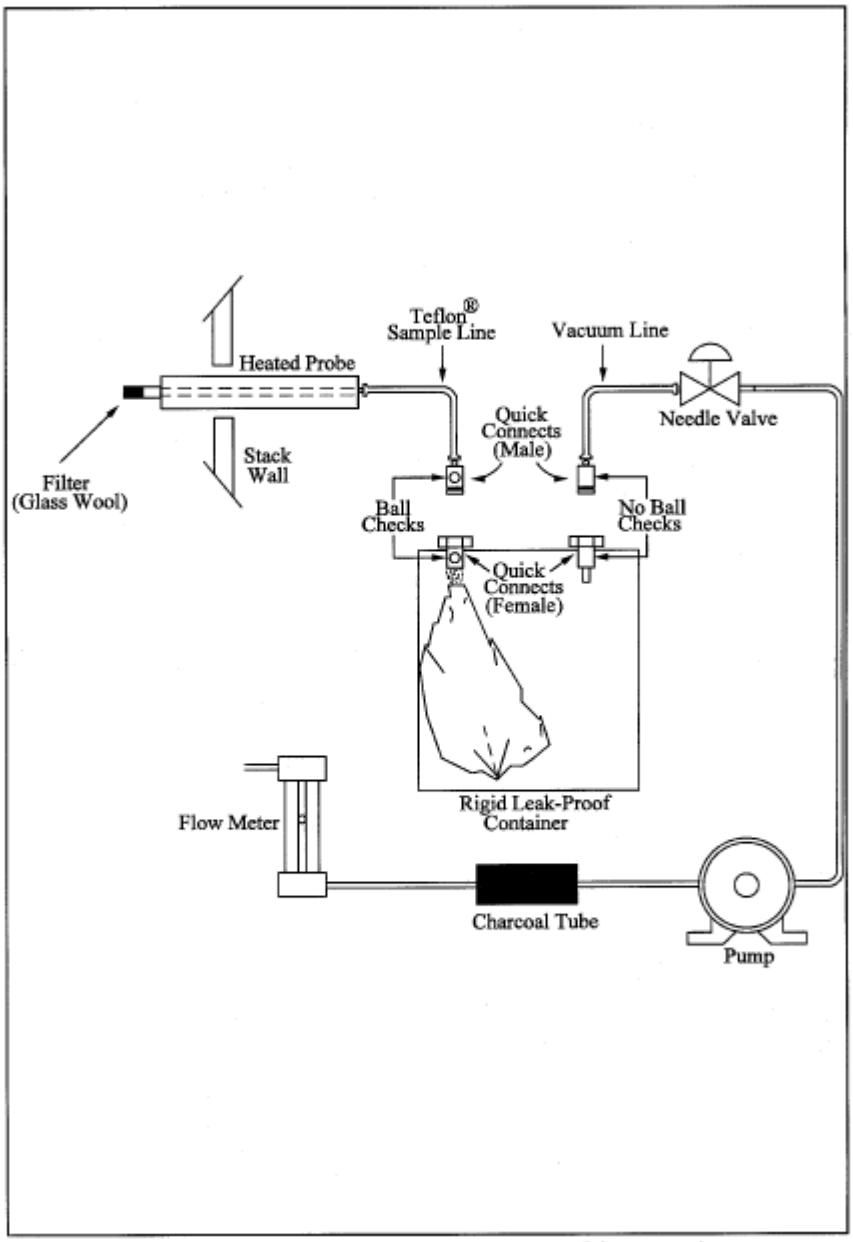

Figure 106-1. Integrated-bag sampling train.

View or download PDF

Method 107—Determination of Vinyl Chloride Content of In-Process Wastewater Samples, and Vinyl Chloride Content of Polyvinyl Chloride Resin Slurry, Wet Cake, and Latex Samples

Note: Performance of this method should not be attempted by persons unfamiliar with the operation of a gas chromatograph (GC) nor by those who are unfamiliar with source sampling, because knowledge beyond the scope of this presentation is required. This method does not include all of the specifications (*e.g.,* equipment and supplies) and procedures (*e.g.,* sampling and analytical) essential to its performance. Some material is incorporated by reference from other methods in this part. Therefore, to obtain reliable results, persons using this method should have a thorough knowledge of at least the following additional test methods: Method 106.

1.0 Scope and Application

1.1 Analytes.

Analyte	CAS No.	Sensitivity
Vinyl Chloride (CH_2:CHCl)	75–01–4	Dependent upon analytical equipment.

1.2 Applicability. This method is applicable for the determination of the vinyl chloride monomer (VCM) content of in-process wastewater samples, and the residual vinyl chloride monomer (RCVM) content of polyvinyl chloride (PVC) resins, wet, cake, slurry, and latex samples. It cannot be used for polymer in fused forms, such as sheet or cubes. This method is not acceptable where methods from section 304(h) of the Clean Water Act, 33 U.S.C. 1251 *et seq.* (the Federal Water Pollution Control Amendments of 1972 as amended by the Clean Water Act of 1977) are required.

1.3 Data Quality Objectives. Adherence to the requirements of this method will enhance the quality of the data obtained from air pollutant sampling methods.

2.0 Summary of Method

2.1 The basis for this method relates to the vapor equilibrium that is established at a constant known temperature in a closed system between RVCM, PVC resin, water, and air. The RVCM in a PVC resin will equilibrate rapidly in a closed vessel, provided that the temperature of the PVC resin is maintained above the glass transition temperature of that specific resin.

2.2 A sample of PVC or in-process wastewater is collected in a vial or bottle and is conditioned. The headspace in the vial or bottle is then analyzed for vinyl chloride using gas chromatography with a flame ionization detector.

3.0 Definitions[Reserved]

4.0 Interferences

4.1 The chromatograph columns and the corresponding operating parameters herein described normally provide an adequate resolution of vinyl chloride; however, resolution interferences may be encountered on some sources. Therefore, the chromatograph operator shall select the column and operating parameters best suited to his particular analysis requirements, subject to the approval of the Administrator. Approval is automatic provided that confirming data are produced through an adequate supplemental analytical technique, such as analysis with a different column or GC/mass spectroscopy, and that these data are made available for review by the Administrator.

5.0 Safety

5.1 Disclaimer. This method may involve hazardous materials, operations, and equipment. This test method may not address all of the safety problems associated with its use. It is the responsibility of the user of this test method to establish appropriate safety and health practices and determine the applicability of regulatory limitations prior to performing this test method.

5.2 Toxic Analyte. Care must be exercised to prevent exposure of sampling personnel to vinyl chloride, which is a carcinogen. Do not release vinyl chloride to the laboratory atmosphere during preparation of standards. Venting or purging with VCM/air mixtures must be held to a minimum. When they are required, the vapor must be routed to outside air. Vinyl chloride, even at low ppm levels, must never be vented inside the laboratory. After vials have been analyzed, the gas must be vented prior to removal of the vial from the instrument turntable. Vials must be vented through a hypodermic needle connected to an activated charcoal tube to prevent release of vinyl chloride into the laboratory atmosphere. The charcoal must be replaced prior to vinyl chloride breakthrough.

6.0 Equipment and Supplies

6.1 Sample Collection. The following equipment is required:

6.1.1 Glass bottles. 60-ml (2-oz) capacity, with wax-lined screw-on tops, for PVC samples.

6.1.2 Glass Vials. Headspace vials, with Teflon-faced butyl rubber sealing discs, for water samples.

6.1.3 Adhesive Tape. To prevent loosening of bottle tops.

6.2 Sample Recovery. The following equipment is required:

6.2.1 Glass Vials. Headspace vials, with butyl rubber septa and aluminum caps. Silicone rubber is not acceptable.

6.2.2 Analytical Balance. Capable of determining sample weight within an accuracy of ±1 percent.

6.2.3 Vial Sealer. To seal headspace vials.

6.2.4 Syringe. 100-ml capacity.

6.3 Analysis. The following equipment is required:

6.3.1 Headspace Sampler and Chromatograph. Capable of sampling and analyzing a constant amount of headspace gas from a sealed vial, while maintaining that vial at a temperature of 90 °C ±0.5 °C (194 °F ±0.9 °F). The chromatograph shall be equipped with a flame ionization detector (FID). Perkin-Elmer Corporation Models F–40, F–42, F–45, HS–6, and HS–100, and Hewlett-Packard Corporation Model 19395A have been found satisfactory. Chromatograph backflush capability may be required.

6.3.2 Chromatographic Columns. Stainless steel 1 m by 3.2 mm and 2 m by 3.2 mm, both containing 50/80-mesh Porapak Q. Other columns may be used provided that the precision and accuracy of the analysis of vinyl chloride standards are not impaired and information confirming that there is adequate resolution of the vinyl chloride peak are available for review. (Adequate resolution is defined as an area overlap of not more than 10 percent of the vinyl chloride peak by an interferant peak. Calculation of area overlap is explained in Procedure 1 of appendix C to this part: “Determination of Adequate Chromatographic Peak Resolution.”) Two 1.83 m columns, each containing 1 percent Carbowax 1500 on Carbopak B, have been found satisfactory for samples containing acetaldehyde.

6.3.3 Temperature Sensor. Range 0 to 100 °C (32 to 212 °F) accurate to 0.1 °C.

6.3.4 Integrator-Recorder. To record chromatograms.

6.3.5 Barometer. Accurate to 1 mm Hg.

6.3.6 Regulators. For required gas cylinders.

6.3.7 Headspace Vial Pre-Pressurizer. Nitrogen pressurized hypodermic needle inside protective shield.

7.0 Reagents and Standards

7.1 Analysis. Same as Method 106, Section 7.1, with the addition of the following:

7.1.1 Water. Interference-free.

7.2 Calibration. The following items are required for calibration:

7.2.1 Cylinder Standards (4). Gas mixture standards (50-, 500-, 2000- and 4000-ppm vinyl chloride in nitrogen cylinders). Cylinder standards may be used directly to prepare a chromatograph calibration curve as described in Section 10.3, if the following conditions are met: (a) The manufacturer certifies the gas composition with an accuracy of ±3 percent or better (see Section 7.2.1.1). (b) The manufacturer recommends a maximum shelf life over which the gas concentration does not change by greater than ±5 percent from the certified value. (c) The manufacturer affixes the date of gas cylinder preparation, certified vinyl chloride concentration, and recommended maximum shelf life to the cylinder before shipment to the buyer.

7.2.1.1 Cylinder Standards Certification. The manufacturer shall certify the concentration of vinyl chloride in nitrogen in each cylinder by (a) directly analyzing each cylinder and (b) calibrating the analytical procedure on the day of cylinder analysis. To calibrate the analytical procedure, the manufacturer shall use, as a minimum, a 3-point calibration curve. It is recommended that the manufacturer maintain (1) a high-concentration calibration standard (between 4000 and 8000 ppm) to prepare the calibration curve by an appropriate dilution technique and (2) a low-concentration calibration standard (between 50 and 500 ppm) to verify the dilution technique used. If the difference between the apparent concentration read from the calibration curve and the true concentration assigned to the low-concentration calibration standard exceeds 5 percent of the true concentration, the manufacturer shall determine the source of error and correct it, then repeat the 3-point calibration.

7.2.1.2 Verification of Manufacturer's Calibration Standards. Before using, the manufacturer shall verify each calibration standard by (a) comparing it to gas mixtures prepared (with 99 mole percent vinyl chloride) in accordance with the procedure described in Section 10.1 of Method 106 or by (b) calibrating it against vinyl chloride cylinder Standard Reference Materials (SRMs) prepared by the National Institute of Standards and Technology, if such SRMs are available. The agreement between the initially determined concentration value and the verification concentration value must be within 5 percent. The manufacturer must reverify all calibration standards on a time interval consistent with the shelf life of the cylinder standards sold.

8.0 Sample Collection, Preservation, Storage, and Transport

8.1 Sample Collection.

8.1.1 PVC Sampling. Allow the resin or slurry to flow from a tap on the tank or silo until the tap line has been well purged. Extend and fill a 60-ml sample bottle under the tap, and immediately tighten a cap on the bottle. Wrap adhesive tape around the cap and bottle to prevent the cap from loosening. Place an identifying label on each bottle, and record the date, time, and sample location both on the bottles and in a log book.

8.1.2 Water Sampling. At the sampling location fill the vials bubble-free to overflowing so that a convex meniscus forms at the top. The excess water is displaced as the sealing disc is carefully placed, with the Teflon side down, on the opening of the vial. Place the aluminum seal over the disc and the neck of the vial, and crimp into place. Affix an identifying label on the bottle, and record the date, time, and sample location both on the vials and in a log book.

8.2 Sample Storage. All samples must be analyzed within 24 hours of collection, and must be refrigerated during this period.

9.0 Quality Control

Section	Quality control measure	Effect
10.3	Chromatograph calibration	Ensure precision and accuracy of chromatograph.

10.0 Calibration and Standardization

Note: Maintain a laboratory log of all calibrations.

10.1 Preparation of Standards. Calibration standards are prepared as follows: Place 100 µl or about two equal drops of distilled water in the sample vial, then fill the vial with the VCM/nitrogen standard, rapidly seat the septum, and seal with the aluminum cap. Use a1/8-in. stainless steel line from the cylinder to the vial. Do not use rubber or Tygon tubing. The sample line from the cylinder must be purged (into a properly vented hood) for several minutes prior to filling the vials. After purging, reduce the flow rate to between 500 and 1000 cc/min. Place end of tubing into vial (near bottom). Position a septum on top of the vial, pressing it against the1/8-in. filling tube to minimize the size of the vent opening. This is necessary to minimize mixing air with the standard in the vial. Each vial is to be purged with standard for 90 seconds, during which time the filling tube is gradually slid to the top of the vial. After the 90 seconds, the tube is removed with the septum, simultaneously sealing the vial. Practice will be necessary to develop good technique. Rubber gloves should be worn during the above operations. The sealed vial must then be pressurized for 60 seconds using the vial prepressurizer. Test the vial for leakage by placing a drop of water on the septum at the needle hole. Prepressurization of standards is not required unless samples have been prepressurized.

10.2 Analyzer Calibration. Calibration is to be performed each 8-hour period the chromatograph is used. Alternatively, calibration with duplicate 50-, 500-, 2,000-, and 4,000-ppm standards (hereafter described as a four-point calibration) may be performed on a monthly basis, provided that a calibration confirmation test consisting of duplicate analyses of an appropriate standard is performed once per plant shift, or once per chromatograph carrousel operation (if the chromatograph operation is less frequent than once per shift). The criterion for acceptance of each calibration confirmation test is that both analyses of 500-ppm standards [2,000-ppm standards if dispersion resin (excluding latex resin) samples are being analyzed] must be within 5 percent of the most recent four-point calibration curve. If this criterion is not met, then a complete four-point calibration must be performed before sample analyses can proceed.

10.3 Preparation of Chromatograph Calibration Curve. Prepare two vials each of 50-, 500-, 2,000-, and 4,000-ppm standards. Run the calibration samples in exactly the same manner as regular samples. Plot A_s, the integrator area counts for each standard sample, versus C_c, the concentration of vinyl chloride in each standard sample. Draw a straight line through the points derived by the least squares method.

11.0 Analytical Procedure

11.1 Preparation of Equipment. Install the chromatographic column and condition overnight at 160 °C (320 °F). In the first operation, Porapak columns must be purged for 1 hour at 230 °C (450 °F).

Do not connect the exit end of the column to the detector while conditioning. Hydrogen and air to the detector must be turned off while the column is disconnected.

11.2 Flow Rate Adjustments. Adjust flow rates as follows:

11.2.1. Nitrogen Carrier Gas. Set regulator on cylinder to read 50 psig. Set regulator on chromatograph to produce a flow rate of 30.0 cc/min. Accurately measure the flow rate at the exit end of the column using the soap film flowmeter and a stopwatch, with the oven and column at the analysis temperature. After the

instrument program advances to the “B” (backflush) mode, adjust the nitrogen pressure regulator to exactly balance the nitrogen flow rate at the detector as was obtained in the “A” mode.

11.2.2. Vial Prepressurizer Nitrogen.

11.2.2.1 After the nitrogen carrier is set, solve the following equation and adjust the pressure on the vial prepressurizer accordingly.

$$P = \frac{T_1}{T_2}\left[P_1 - \frac{P_{w1} - P_{w2}}{7.50}\right] - 10kPa \qquad \text{Eq. 107-1}$$

Where:

T_1= Ambient temperature, °K (°R).

T_2= Conditioning bath temperature, °K (°R).

P_1= Gas chromatograph absolute dosing pressure (analysis mode), k Pa.

P_{w1}= Water vapor pressure 525.8 mm Hg @ 90 °C.

P_{w2}= Water vapor pressure 19.8 mm Hg @ 22 °C.

7.50 = mm Hg per k Pa.

10 kPa = Factor to adjust the prepressurized pressure to slightly less than the dosing pressure.

11.2.2.2 Because of gauge errors, the apparatus may over-pressurize the vial. If the vial pressure is at or higher than the dosing pressure, an audible double injection will occur. If the vial pressure is too low, errors will occur on resin samples because of inadequate time for head-space gas equilibrium. This condition can be avoided by running several standard gas samples at various pressures around the calculated pressure, and then selecting the highest pressure that does not produce a double injection. All samples and standards must be pressurized for 60 seconds using the vial prepressurizer. The vial is then placed into the 90 °C conditioning bath and tested for leakage by placing a drop of water on the septum at the needle hole. A clean, burr-free needle is mandatory.

11.2.3. Burner Air Supply. Set regulator on cylinder to read 50 psig. Set regulator on chromatograph to supply air to burner at a rate between 250 and 300 cc/min. Check with bubble flowmeter.

11.2.4. Hydrogen Supply. Set regulator on cylinder to read 30 psig. Set regulator on chromatograph to supply approximately 35 ±5 cc/min. Optimize hydrogen flow to yield the most sensitive detector response without extinguishing the flame. Check flow with bubble meter and record this flow.

11.3 Temperature Adjustments. Set temperatures as follows:

11.3.1. Oven (chromatograph column), 140 °C (280 °F).

11.3.2. Dosing Line, 150 °C (300 °F).

11.3.3. Injection Block, 170 °C (340 °F).

11.3.4. Sample Chamber, Water Temperature, 90 °C ±1.0 °C (194 °F ±1.8 °F).

11.4 Ignition of Flame Ionization Detector. Ignite the detector according to the manufacturer's instructions.

11.5 Amplifier Balance. Balance the amplifier according to the manufacturer's instructions.

11.6 Programming the Chromatograph. Program the chromatograph as follows:

11.6.1. I—Dosing or Injection Time. The normal setting is 2 seconds.

11.6.2. A—Analysis Time. The normal setting is approximately 70 percent of the VCM retention time. When this timer terminates, the programmer initiates backflushing of the first column.

11.6.3. B—Backflushing Time. The normal setting is double the analysis time.

11.6.4. W—Stabilization Time. The normal setting is 0.5 min to 1.0 min.

11.6.5. X—Number of Analyses Per Sample. The normal setting is one.

11.7. Sample Treatment. All samples must be recovered and analyzed within 24 hours after collection.

11.7.1 Resin Samples. The weight of the resin used must be between 0.1 and 4.5 grams. An exact weight must be obtained (within ±1 percent) for each sample. In the case of suspension resins, a volumetric cup can be prepared for holding the required amount of sample. When the cup is used, open the sample bottle, and add the cup volume of resin to the tared sample vial (tared, including septum and aluminum cap). Obtain the exact sample weight, add 100 ml or about two equal drops of water, and immediately seal the vial. Report this value on the data sheet; it is required for calculation of RVCM. In the case of dispersion resins, the cup cannot be used. Weigh the sample in an aluminum dish, transfer the sample to the tared vial, and accurately weigh it in the vial. After prepressurization of the samples, condition them for a minimum of 1 hour in the 90 °C (190 °F) bath. Do not exceed 5 hours. Prepressurization is not required if the sample weight, as analyzed, does not exceed 0.2 gram. It is also not required if solution of the prepressurization equation yields an absolute prepressurization value that is within 30 percent of the atmospheric pressure.

Note: Some aluminum vial caps have a center section that must be removed prior to placing into sample tray. If the cap is not removed, the injection needle will be damaged.

11.7.2 Suspension Resin Slurry and Wet Cake Samples. Decant the water from a wet cake sample, and turn the sample bottle upside down onto a paper towel. Wait for the water to drain, place approximately 0.2 to 4.0 grams of the wet cake sample in a tared vial (tared, including septum and aluminum cap) and seal immediately. Then determine the sample weight (1 percent). All samples weighing over 0.2 gram, must be prepressurized prior to conditioning for 1 hour at 90 °C (190 °F), except as noted in Section 11.7.1. A sample of wet cake is used to determine total solids (TS). This is required for calculating the RVCM.

11.7.3 Dispersion Resin Slurry and Geon Latex Samples. The materials should not be filtered. Sample must be thoroughly mixed. Using a tared vial (tared, including septum and aluminum cap) add approximately eight drops (0.25 to 0.35 g) of slurry or latex using a medicine dropper. This should be done immediately after mixing. Seal the vial as soon as possible. Determine sample weight (1 percent). Condition the vial for 1 hour at 90 °C (190 °F) in the analyzer bath. Determine the TS on the slurry sample (Section 11.10).

11.7.4 In-process Wastewater Samples. Using a tared vial (tared, including septum and aluminum cap) quickly add approximately 1 cc of water using a medicine dropper. Seal the vial as soon as possible. Determine sample weight (1 percent). Condition the vial for 1 hour at 90 °C (190 °F) in the analyzer bath.

11.8 Preparation of Sample Turntable.

11.8.1 Before placing any sample into turntable, be certain that the center section of the aluminum cap has been removed. The numbered sample vials should be placed in the corresponding numbered positions in the turntable. Insert samples in the following order:

11.8.1.1 Positions 1 and 2. Old 2000-ppm standards for conditioning. These are necessary only after the analyzer has not been used for 24 hours or longer.

11.8.1.2 Position 3. 50-ppm standard, freshly prepared.

11.8.1.3 Position 4. 500-ppm standard, freshly prepared.

11.8.1.4 Position 5. 2000-ppm standard, freshly prepared.

11.8.1.5 Position 6. 4000-ppm standard, freshly prepared.

11.8.1.6 Position 7. Sample No. 7 (This is the first sample of the day, but is given as 7 to be consistent with the turntable and the integrator printout.)

11.8.2 After all samples have been positioned, insert the second set of 50-, 500-, 2000-, and 4000-ppm standards. Samples, including standards, must be conditioned in the bath of 90 °C (190 °F) for a minimum of one hour and a maximum of five hours.

11.9 Start Chromatograph Program. When all samples, including standards, have been conditioned at 90 °C (190 °F) for at least one hour, start the analysis program according to the manufacturer's instructions. These instructions must be carefully followed when starting and stopping a program to prevent damage to the dosing assembly.

11.10 Determination of Total Solids. For wet cake, slurry, resin solution, and PVC latex samples, determine TS for each sample by accurately weighing approximately 3 to 4 grams of sample in an aluminum pan before and after placing in a draft oven (105 to 110 °C (221 to 230 °F)). Samples must be dried to constant weight. After first weighing, return the pan to the oven for a short period of time, and then reweigh to verify complete dryness. The TS are then calculated as the final sample weight divided by initial sample weight.

12.0 Calculations and Data Analysis

12.1 Nomenclature.

A_s= Chromatogram area counts of vinyl chloride for the sample, area counts.

A_s= Chromatogram area counts of vinyl chloride for the sample.

C_c= Concentration of vinyl chloride in the standard sample, ppm.

K_p= Henry's Law Constant for VCM in PVC 90 °C, 6.52×10^{-6}g/g/mm Hg.

K_w= Henry's Law Constant for VCM in water 90 °C, 7×10^{-7}g/g/mm Hg.

M_v= Molecular weight of VCM, 62.5 g/mole.

m = Sample weight, g.

P_a= Ambient atmospheric pressure, mm Hg.

R = Gas constant, (62360^3 ml) (mm Hg)/(mole)(°K).

R_f= Response factor in area counts per ppm VCM.

R_s= Response factor, area counts/ppm.

T_l= Ambient laboratory temperature, °K.

TS = Total solids expressed as a decimal fraction.

T_2= Equilibrium temperature, °K.

V_g= Volume of vapor phase, ml.

$$= V_v - \frac{m(TS)}{1.36} - \frac{m(1-TS)}{0.9653}$$

V_v= Vial volume,^{3} ml.

1.36 = Density of PVC at 90 °C, g/^{3} ml.

0.9653 = Density of water at 90 °C, g/^{3} ml.

12.2 Response Factor. If the calibration curve described in Section 10.3 passes through zero, an average response factor, R_f, may be used to facilitate computation of vinyl chloride sample concentrations.

12.2.1 To compute R_f, first compute a response factor, R_s, for each sample as follows:

$$R_s = \frac{A_s}{C_c} \qquad \text{Eq. 107-2}$$

12.2.2 Sum the individual response factors, and calculate R_f. If the calibration curve does not pass through zero, use the calibration curve to determine each sample concentration.

12.3 Residual Vinyl Chloride Monomer Concentration, (C_{rvc}) or Vinyl Chloride Monomer Concentration. Calculate C_{rvc}in ppm or mg/kg as follows:

$$C_{rvc} = \frac{A_s P_a}{R_f T_1}\left[\frac{M_v V_g}{Rm} + K_p(TS)T_2 K_w(1-TS)T_2\right] \qquad \text{Eq. 107-3}$$

Note: Results calculated using these equations represent concentration based on the total sample. To obtain results based on dry PVC content, divide by TS.

13.0 Method Performance

13.1 Range and Sensitivity. The lower limit of detection of vinyl chloride will vary according to the sampling and chromatographic system. The system should be capable of producing a measurement for a 50-ppm vinyl chloride standard that is at least 10 times the standard deviation of the system background noise level.

13.2 An interlaboratory comparison between seven laboratories of three resin samples, each split into three parts, yielded a standard deviation of 2.63 percent for a sample with a mean of 2.09 ppm, 4.16 percent for a sample with a mean of 1.66 ppm, and 5.29 percent for a sample with a mean of 62.66 ppm.

14.0 Pollution Prevention[Reserved]

15.0 Waste Management[Reserved]

16.0 References

1. B.F. Goodrich, Residual Vinyl Chloride Monomer Content of Polyvinyl Chloride Resins, Latex, Wet Cake, Slurry and Water Samples. B.F. Goodrich Chemical Group Standard Test Procedure No. 1005-E. B.F. Goodrich Technical Center, Avon Lake, Ohio. October 8, 1979.

2. Berens, A.R. The Diffusion of Vinyl Chloride in Polyvinyl Chloride. ACS-Division of Polymer Chemistry, Polymer Preprints 15 (2):197. 1974.

3. Berens, A.R. The Diffusion of Vinyl Chloride in Polyvinyl Chloride. ACS-Division of Polymer Chemistry, Polymer Preprints 15 (2):203. 1974.

4. Berens, A.R., *et. al.* Analysis for Vinyl Chloride in PVC Powders by Head-Space Gas Chromatography. Journal of Applied Polymer Science. 19:3169–3172. 1975.

5. Mansfield, R.A. The Evaluation of Henry's Law Constant (Kp) and Water Enhancement in the Perkin-Elmer Multifract F–40 Gas Chromatograph. B.F. Goodrich. Avon Lake, Ohio. February 10, 1978.

17.0 Tables, Diagrams, Flowcharts, and Validation Data[Reserved]

Method 107A—Determination of Vinyl Chloride Content of Solvents, Resin-Solvent Solution, Polyvinyl Chloride Resin, Resin Slurry, Wet Resin, and Latex Samples

Introduction

Performance of this method should not be attempted by persons unfamiliar with the operation of a gas chromatograph (GC) or by those who are unfamiliar with source sampling because knowledge beyond the scope of this presentation is required. Care must be exercised to prevent exposure of sampling personnel to vinyl chloride, a carcinogen.

1. *Applicability and Principle*

1.1 Applicability. This is an alternative method and applies to the measurement of the vinyl chloride content of solvents, resin solvent solutions, polyvinyl chloride (PVC) resin, wet cake slurries, latex, and fabricated resin samples. This method is not acceptable where methods from Section 304(h) of the Clean Water Act, 33 U.S.C. 1251 et seq., (the Federal Water Pollution Control Act Amendments of 1972 as amended by the Clean Water Act of 1977) are required.

1.2 Principle. The basis for this method lies in the direct injection of a liquid sample into a chromatograph and the subsequent evaporation of all volatile material into the carrier gas stream of the chromatograph, thus permitting analysis of all volatile material including vinyl chloride.

2. *Range and Sensitivity*

The lower limit of detection of vinyl chloride in dry PVC resin is 0.2 ppm. For resin solutions, latexes, and wet resin, this limit rises inversely as the nonvolatile (resin) content decreases.

With proper calibration, the upper limit may be extended as needed.

3. *Interferences*

The chromatograph columns and the corresponding operating parameters herein described normally provide an adequate resolution of vinyl chloride. In cases where resolution interferences are encountered, the chromatograph operator shall select the column and operating parameters best suited to his particular analysis problem, subject to the approval of the Administrator. Approval is automatic, provided that the tester

produces confirming data through an adequate supplemental analytical technique, such as analysis with a different column or GC/mass spectroscopy, and has the data available for review by the Administrator.

4. *Precision and Reproducibility*

A standard sample of latex containing 181.8 ppm vinyl chloride analyzed 10 times by the alternative method showed a standard deviation of 7.5 percent and a mean error of 0.21 percent.

A sample of vinyl chloride copolymer resin solution was analyzed 10 times by the alternative method and showed a standard deviation of 6.6 percent at a level of 35 ppm.

5. *Safety*

Do not release vinyl chloride to the laboratory atmosphere during preparation of standards. Venting or purging with vinyl chloride monomer (VCM) air mixtures must be held to minimum. When purging is required, the vapor must be routed to outside air. Vinyl chloride, even at low-ppm levels, must never be vented inside the laboratory.

6. *Apparatus*

6.1 Sampling. The following equipment is required:

6.1.1 Glass Bottles. 16-oz wide mouth wide polyethylene-lined, screw-on tops.

6.1.2 Adhesive Tape. To prevent loosening of bottle tops.

6.2 Sample Recovery. The following equipment is required:

6.2.1 Glass Vials. 20-ml capacity with polycone screw caps.

6.2.2 Analytical Balance. Capable of weighing to ±0.01 gram.

6.2.3 Syringe. 50-microliter size, with removable needle.

6.2.4 Fritted Glass Sparger. Fine porosity.

6.2.5 Aluminum Weighing Dishes.

6.2.6 Sample Roller or Shaker. To help dissolve sample.

6.3 Analysis. The following equipment is required:

6.3.1 Gas Chromatograph. Hewlett Packard Model 5720A or equivalent.

6.3.2 Chromatograph Column. Stainless steel, 6.1 m by 3.2 mm, packed with 20 percent Tergitol E–35 on Chromosorb W AW 60/80 mesh. The analyst may use other columns provided that the precision and accuracy of the analysis of vinyl chloride standards are not impaired and that he has available for review information confirming that there is adequate resolution of the vinyl chloride peak. (Adequate resolution is defined as an area overlap of not more than 10 percent of the vinyl chloride peak by an interfering peak. Calculation of area overlap is explained in Apendix C, Procedure 1: “Determination of Adequate Chromatographic Peak Resolution.”)

6.3.3 Valco Instrument Six-Port Rotary Valve. For column back flush.

6.3.4 Septa. For chromatograph injection port.

6.3.5 Injection Port Liners. For chromatograph used.

6.3.6 Regulators. For required gas cylinders.

6.3.7 Soap Film Flowmeter. Hewlett Packard No. 0101-0113 or equivalent.

6.4 Calibration. The following equipment is required:

6.4.1 Analytical Balance. Capable of weighing to ±0.0001 g.

6.4.2 Erlenmeyer Flask With Glass Stopper. 125 ml.

6.4.3 Pipets. 0.1, 0.5, 1, 5, 10, and 50 ml.

6.4.4 Volumetric Flasks. 10 and 100 ml.

7. *Reagents*

Use only reagents that are of chromatograph grade.

7.1 Analysis. The following items are required:

7.1.1 Hydrogen Gas. Zero grade.

7.1.2 Nitrogen Gas. Zero grade.

7.1.3 Air. Zero grade.

7.1.4 Tetrahydrofuran (THF). Reagent grade.

Analyze the THF by injecting 10 microliters into the prepared gas chromatograph. Compare the THF chromatogram with that shown in Figure 107A–1. If the chromatogram is comparable to A, the THF should be sparged with pure nitrogen for approximately 2 hours using the fritted glass sparger to attempt to remove the interfering peak. Reanalyze the sparged THF to determine whether the THF is acceptable for use. If the scan is comparable to B, the THF should be acceptable for use in the analysis.

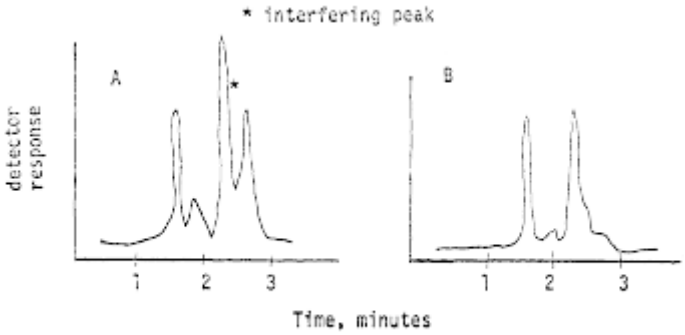

Figure 107A-1

7.1.5 N, N-Dimethylacetamide (DMAC). Spectrographic grade. For use in place of THF.

7.2 Calibration. The following item is required:

7.2.1 Vinyl Chloride 99.9 Percent. Ideal Gas Products lecture bottle, or equivalent. For preparation of standard solutions.

8. *Procedure*

8.1 Sampling. Allow the liquid or dried resin to flow from a tap on the tank, silo, or pipeline until the tap has been purged. Fill a wide-mouth pint bottle, and immediately tightly cap the bottle. Place an identifying label on each bottle and record the date, time, sample location, and material.

8.2 Sample Treatment. Sample must be run within 24 hours.

8.2.1 Resin Samples. Weigh 9.00 ±0.01 g of THF or DMAC in a tared 20-ml vial. Add 1.00 ±0.01 g of resin to the tared vial containing the THF or DMAC. Close the vial tightly with the screw cap, and shake or otherwise agitate the vial until complete solution of the resin is obtained. Shaking may require several minutes to several hours, depending on the nature of the resin.

8.2.2 Suspension Resin Slurry and Wet Resin Sample. Slurry must be filtered using a small Buchner funnel with vacuum to yield a wet resin sample. The filtering process must be continued only as long as a steady stream of water is exiting from the funnel. Excessive filtration time could result in some loss of VCM. The wet resin sample is weighed into a tared 20-ml vial with THF or DMAC as described earlier for resin samples (8.2.1) and treated the same as the resin sample. A sample of the wet resin is used to determine total solids as required for calculating the residual VCM (Section 8.3.4).

8.2.3 Latex and Resin Solvent Solutions. Samples must be thoroughly mixed. Weigh 1.00 ±0.01 g of the latex or resin-solvent solution into a 20-ml vial containing 9.00 ±0.01 g of THF or DMAC as for the resin samples (8.2.1). Cap and shake until complete solution is obtained. Determine the total solids of the latex or resin solution sample (Section 8.3.4).

8.2.4 Solvents and Non-viscous Liquid Samples. No preparation of these samples is required. The neat samples are injected directly into the GC.

8.3 Analysis.

8.3.1 Preparation of GC. Install the chromatographic column, and condition overnight at 70 °C. Do not connect the exit end of the column to the detector while conditioning.

8.3.1.1 Flow Rate Adjustments. Adjust the flow rate as follows:

a. Nitrogen Carrier Gas. Set regulator on cylinder to read 60 psig. Set column flow controller on the chromatograph using the soap film flowmeter to yield a flow rate of 40 cc/min.

b. Burner Air Supply. Set regulator on the cylinder at 40 psig. Set regulator on the chromatograph to supply air to the burner to yield a flow rate of 250 to 300 cc/min using the flowmeter.

c. Hydrogen. Set regulator on cylinder to read 60 psig. Set regulator on the chromatograph to supply 30 to 40 cc/min using the flowmeter. Optimize hydrogen flow to yield the most sensitive detector response without extinguishing the flame. Check flow with flowmeter and record this flow.

d. Nitrogen Back Flush Gas. Set regulator on the chromatograph using the soap film flowmeter to yield a flow rate of 40 cc/min.

8.3.1.2 Temperature Adjustments. Set temperature as follows:

a. Oven (chromatographic column) at 70 °C.

b. Injection Port at 100 °C.

c. Detector at 300 °C.

8.3.1.3 Ignition of Flame Ionization Detector. Ignite the detector according to the manufacturer's instructions. Allow system to stabilize approximately 1 hour.

8.3.1.4 Recorder. Set pen at zero and start chart drive.

8.3.1.5 Attenuation. Set attenuation to yield desired peak height depending on sample VCM content.

8.3.2 Chromatographic Analyses.

a. Sample Injection. Remove needle from 50-microliter syringe. Open sample vial and draw 50-microliters of THF or DMAC sample recovery solution into the syringe. Recap sample vial. Attach needle to the syringe and while holding the syringe vertically (needle uppermost), eject 40 microliters into an absorbent tissue. Wipe needle with tissue. Now inject 10 microliters into chromatograph system. Repeat the injection until two consecutive values for the height of the vinyl chloride peak do not vary more than 5 percent. Use the average value for these two peak heights to compute the sample concentration.

b. Back Flush. After 4 minutes has elapsed after sample injection, actuate the back flush valve to purge the first 4 feet of the chromatographic column of solvent and other high boilers.

c. Sample Data. Record on the chromatograph strip chart the data from the sample label.

d. Elution Time. Vinyl chloride elutes at 2.8 minutes. Acetaldehyde elutes at 3.7 minutes. Analysis is considered complete when chart pen becomes stable. After 5 minutes, reset back flush valve and inject next sample.

8.3.3 Chromatograph Servicing.

a. Septum. Replace after five sample injections.

b. Sample Port Liner. Replace the sample port liner with a clean spare after five sample injections.

c. Chromatograph Shutdown. If the chromatograph has been shut down overnight, rerun one or more samples from the preceding day to test stability and precision prior to starting on the current day's work.

8.3.4 Determination of Total Solids (TS). For wet resin, resin solution, and PVC latex samples, determine the TS for each sample by accurately weighing approximately 3 to 5 grams of sample into a tared aluminum pan. The initial procedure is as follows:

a. Where water is the major volatile component: Tare the weighing dish, and add 3 to 5 grams of sample to the dish. Weigh to the nearest milligram.

b. Where volatile solvent is the major volatile component: Transfer a portion of the sample to a 20-ml screw cap vial and cap immediately. Weigh the vial to the nearest milligram. Uncap the vial and transfer a 3- to 5-gram portion of the sample to a tared aluminum weighing dish. Recap the vial and reweigh to the nearest milligram. The vial weight loss is the sample weight.

To continue, place the weighing pan in a 130 °C oven for 1 hour. Remove the dish and allow to cool to room temperature in a desiccator. Weigh the pan to the nearest 0.1 mg. Total solids is the weight of material in the aluminum pan after heating divided by the net weight of sample added to the pan originally times 100.

9. *Calibration of the Chromatograph*

9.1 Preparation of Standards. Prepare a 1 percent by weight (approximate) solution of vinyl chloride in THF or DMAC by bubbling vinyl chloride gas from a cylinder into a tared 125-ml glass-stoppered flask containing THF or DMAC. The weight of vinyl chloride to be added should be calculated prior to this operation, i.e., 1 percent of the weight of THF or DMAC contained in the tared flask. This must be carried out in a laboratory hood. Adjust the vinyl chloride flow from the cylinder so that the vinyl chloride dissolves essentially completely in the THF or DMAC and is not blown to the atmosphere. Take particular care not to volatize any of the solution. Stopper the flask and swirl the solution to effect complete mixing. Weigh the stoppered flask to nearest 0.1 mg to determine the exact amount of vinyl chloride added.

Pipet 10 ml of the approximately 1 percent solution into a 100-ml glass-stoppered volumetric flask, and add THF or DMAC to fill to the mark. Cap the flask and invert 10 to 20 times. This solution contains approximately 1,000 ppm by weight of vinyl chloride (note the exact concentration).

Pipet 50-, 10-, 5-, 1-, 0.5-, and 0.1-ml aliquots of the approximately 1,000 ppm solution into 10 ml glass stoppered volumetric flasks. Dilute to the mark with THF or DMAC, cap the flasks and invert each 10 to 20 times. These solutions contain approximately 500, 100, 50, 10, 5, and 1 ppm vinyl chloride. Note the exact concentration of each one. These standards are to be kept under refrigeration in stoppered bottles, and must be renewed every 3 months.

9.2 Preparation of Chromatograph Calibration Curve.

Obtain the GC for each of the six final solutions prepared in Section 9.1 by using the procedure in Section 8.3.2. Prepare a chart plotting peak height obtained from the chromatogram of each solution versus the known concentration. Draw a straight line through the points derived by the least squares method.

10. *Calculations*

10.1 Response Factor. From the calibration curve described in Section 9.2, select the value of $C_c$that corresponds to $H_c$for each sample. Compute the response factor, R_f, for each sample as follows:

$$R_f = \frac{C_c}{H_c} \qquad \text{Eq. 107A-1}$$

where:

R_f=Chromatograph response factor, ppm/mm.

C_c=Concentration of vinyl chloride in the standard sample, ppm.

H_c=Peak height of the standard sample, mm.

10.2 Residual vinyl chloride monomer concentration (C_{rvc}) or vinyl chloride monomer concentration in resin:

$$C_{rvc} = 10 H_s R_f \qquad \text{Eq. 107A-2}$$

Where:

C_{rvc}=Concentration of residual vinyl chloride monomer, ppm.

H_s=Peak height of sample, mm.

R_f=Chromatograph response factor.

10.3 Samples containing volatile material, i.e., resin solutions, wet resin, and latexes:

$$C_{rwc} = \frac{H_s R_f (1,000)}{TS} \qquad \text{Eq. 107A-3}$$

where:

TS=Total solids in the sample, weight fraction.

10.4 Samples of solvents and in process wastewater:

$$C_{rwc} = \frac{H_s R_f}{0.888} \qquad \text{Eq. 107A-4}$$

Where:

0.888=Specific gravity of THF.

11. *Bibliography*

1. Communication from R. N. Wheeler, Jr.; Union Carbide Corporation. Part 61 National Emissions Standards for Hazardous Air Pollutants appendix B, Method 107—Alternate Method, September 19, 1977.

Method 108—Determination of Particulate and Gaseous Arsenic Emissions

Note: This method does not include all of the specifications (*e.g.,* equipment and supplies) and procedures (*e.g.,* sampling and analytical) essential to its performance. Some material is incorporated by reference from other methods in appendix A to 40 CFR part 60. Therefore, to obtain reliable results, persons using this method should have a thorough knowledge of at least the following additional test methods: Method 1, Method 2, Method 3, Method 5, and Method 12.

1.0 Scope and Application.

1.1 Analytes.

Analyte	CAS No.	Sensitivity
Arsenic compounds as arsenic (As)	7440–38–2	Lower limit 10 µg/ml or less.

1.2 Applicability. This method is applicable for the determination of inorganic As emissions from stationary sources as specified in an applicable subpart of the regulations.

1.3 Data Quality Objectives. Adherence to the requirements of this method will enhance the quality of the data obtained from air pollutant sampling methods.

2.0 Summary of Method

Particulate and gaseous As emissions are withdrawn isokinetically from the source and are collected on a glass mat filter and in water. The collected arsenic is then analyzed by means of atomic absorption spectrophotometry (AAS).

3.0 Definitions.[Reserved]

4.0 Interferences

Analysis for As by flame AAS is sensitive to the chemical composition and to the physical properties (*e.g.,* viscosity, pH) of the sample. The analytical procedure includes a check for matrix effects (Section 11.5).

5.0 Safety

5.1 This method may involve hazardous materials, operations, and equipment. This test method may not address all of the safety problems associated with its use. It is the responsibility of the user to establish appropriate safety and health practices and determine the applicability of regulatory limitations prior to performing this test method.

5.2 Corrosive reagents. The following reagents are hazardous. Personal protective equipment and safe procedures that prevent chemical splashes are recommended. If contact occurs, immediately flush with copious amounts of water for at least 15 minutes. Remove clothing under shower and decontaminate. Treat residual chemical burns as thermal burns.

5.2.1 Hydrochloric Acid (HCl). Highly corrosive liquid with toxic vapors. Vapors are highly irritating to eyes, skin, nose, and lungs, causing severe damage. May cause bronchitis, pneumonia, or edema of lungs. Exposure to concentrations of 0.13 to 0.2 percent can be lethal to humans in a few minutes. Provide ventilation to limit exposure. Reacts with metals, producing hydrogen gas.

5.2.2 Hydrogen Peroxide (H_2O_2). Very harmful to eyes. 30% H_2O_2can burn skin, nose, and lungs.

5.2.3 Nitric Acid (HNO_3). Highly corrosive to eyes, skin, nose, and lungs. Vapors are highly toxic and can cause bronchitis, pneumonia, or edema of lungs. Reaction to inhalation may be delayed as long as 30 hours and still be fatal. Provide ventilation to limit exposure. Strong oxidizer. Hazardous reaction may occur with organic materials such as solvents.

5.2.4 Sodium Hydroxide (NaOH). Causes severe damage to eyes and skin. Inhalation causes irritation to nose, throat, and lungs. Reacts exothermically with small amounts of water.

6.0 Equipment and Supplies

6.1 Sample Collection. A schematic of the sampling train used in performing this method is shown in Figure 108–1; it is similar to the Method 5 sampling train of 40 CFR part 60, appendix A. The following items are required for sample collection:

6.1.1 Probe Nozzle, Probe Liner, Pitot Tube, Differential Pressure Gauge, Filter Holder, Filter Heating System, Temperature Sensor, Metering System, Barometer, and Gas Density Determination Equipment. Same as Method 5, Sections 6.1.1.1 to 6.1.1.7, 6.1.1.9, 6.1.2, and 6.1.3, respectively.

6.1.2 Impingers. Four impingers connected in series with leak-free ground-glass fittings or any similar leak-free noncontaminating fittings. For the first, third, and fourth impingers, use the Greenburg-Smith design, modified by replacing the tip with a 1.3-cm ID (0.5-in.) glass tube extending to about 1.3 cm (0.5 in.) from the bottom of the flask. For the second impinger, use the Greenburg-Smith design with the standard tip. Modifications (*e.g.,* flexible connections between the impingers, materials other than glass, or flexible vacuum lines to connect the filter holder to the condenser) are subject to the approval of the Administrator.

6.1.3 Temperature Sensor. Place a temperature sensor, capable of measuring temperature to within 1 °C (2 °F), at the outlet of the fourth impinger for monitoring purposes.

6.2 Sample Recovery. The following items are required for sample recovery:

6.2.1 Probe-Liner and Probe-Nozzle Brushes, Petri Dishes, Graduated Cylinder and/or Balance, Plastic Storage Containers, and Funnel and Rubber Policeman. Same as Method 5, Sections 6.2.1 and 6.2.4 to 6.2.8, respectively.

6.2.2 Wash Bottles. Polyethylene (2).

6.2.3 Sample Storage Containers. Chemically resistant, polyethylene or polypropylene for glassware washes, 500- or 1000-ml.

6.3 Analysis. The following items are required for analysis:

6.3.1 Spectrophotometer. Equipped with an electrodeless discharge lamp and a background corrector to measure absorbance at 193.7 nanometers (nm). For measuring samples having less than 10 µg As/ml, use a vapor generator accessory or a graphite furnace.

6.3.2 Recorder. To match the output of the spectrophotometer.

6.3.3 Beakers. 150 ml.

6.3.4 Volumetric Flasks. Glass 50-, 100-, 200-, 500-, and 1000-ml; and polypropylene, 50-ml.

6.3.5 Balance. To measure within 0.5 g.

6.3.6 Volumetric Pipets. 1-, 2-, 3-, 5-, 8-, and 10-ml.

6.3.7 Oven.

6.3.8 Hot Plate.

7.0 Reagents and Standards

Unless otherwise indicated, it is intended that all reagents conform to the specifications established by the Committee on Analytical Reagents of the American Chemical Society, where such specifications are available; otherwise, use the best available grade.

7.1 The following reagents are required for sample collection:

7.1.1 Filters. Same as Method 5, Section 7.1.1, except that the filters need not be unreactive to SO_2.

7.1.2 Silica Gel, Crushed Ice, and Stopcock Grease. Same as Method 5, Sections 7.1.2, 7.1.4, and 7.1.5, respectively.

7.1.3 Water. Deionized distilled to meet ASTM D 1193–77 or 91 (incorporated by reference-see §61.18), Type 3. When high concentrations of organic matter are not expected to be present, the $KMnO_4$test for oxidizable organic matter may be omitted.

7.2 Sample Recovery.

7.2.1 0.1 N NaOH. Dissolve 4.00 g of NaOH in about 500 ml of water in a 1-liter volumetric flask. Then, dilute to exactly 1.0 liter with water.

7.3 Analysis. The following reagents and standards are required for analysis:

7.3.1 Water. Same as Section 7.1.3.

7.3.2 Sodium Hydroxide, 0.1 N. Same as in Section 7.2.1.

7.3.3 Sodium Borohydride ($NaBH_4$), 5 Percent Weight by Volume (W/V). Dissolve 50.0 g of $NaBH_4$in about 500 ml of 0.1 N NaOH in a 1-liter volumetric flask. Then, dilute to exactly 1.0 liter with 0.1 N NaOH.

7.3.4 Hydrochloric Acid, Concentrated.

7.3.5 Potassium Iodide (KI), 30 Percent (W/V). Dissolve 300 g of KI in 500 ml of water in a 1 liter volumetric flask. Then, dilute to exactly 1.0 liter with water.

7.3.6 Nitric Acid, Concentrated.

7.3.7 Nitric Acid, 0.8 N. Dilute 52 ml of concentrated $HNO_3$to exactly 1.0 liter with water.

7.3.8 Nitric Acid, 50 Percent by Volume (V/V). Add 50 ml concentrated $HNO_3$to 50 ml water.

7.3.9 Stock Arsenic Standard, 1 mg As/ml. Dissolve 1.3203 g of primary standard grade As_2O_3in 20 ml of 0.1 N NaOH in a 150 ml beaker. Slowly add 30 ml of concentrated HNO_3. Heat the resulting solution and evaporate just to dryness. Transfer the residue quantitatively to a 1-liter volumetric flask, and dilute to 1.0 liter with water.

7.3.10 Arsenic Working Solution, 1.0 µg As/ml. Pipet exactly 1.0 ml of stock arsenic standard into an acid-cleaned, appropriately labeled 1-liter volumetric flask containing about 500 ml of water and 5 ml of concentrated HNO_3. Dilute to exactly 1.0 liter with water.

7.3.11 Air. Suitable quality for AAS analysis.

7.3.12 Acetylene. Suitable quality for AAS analysis.

7.3.13 Nickel Nitrate, 5 Percent Ni (W/V). Dissolve 24.780 g of nickel nitrate hexahydrate [$Ni(NO_3)_2 6H_2O$] in water in a 100-ml volumetric flask, and dilute to 100 ml with water.

7.3.14 Nickel Nitrate, 1 Percent Ni (W/V). Pipet 20 ml of 5 percent nickel nitrate solution into a 100-ml volumetric flask, and dilute to exactly 100 ml with water.

7.3.15 Hydrogen Peroxide, 3 Percent by Volume. Pipet 50 ml of 30 percent H_2O_2into a 500-ml volumetric flask, and dilute to exactly 500 ml with water.

7.3.16 Quality Assurance Audit Samples. When making compliance determinations, and upon availability, audit samples may be obtained from the appropriate EPA regional Office or from the responsible enforcement authority.

Note: The responsible enforcement authority should be notified at least 30 days prior to the test date to allow sufficient time for sample delivery.

8.0 Sample Collection, Preservation, Transport, and Storage

8.1 Pretest Preparation. Follow the general procedure given in Method 5, Section 8.1, except the filter need not be weighed, and the 200 ml of 0.1N NaOH and Container 4 should be tared to within 0.5 g.

8.2 Preliminary Determinations. Follow the general procedure given in Method 5, Section 8.2, except select the nozzle size to maintain isokinetic sampling rates below 28 liters/min (1.0 cfm).

8.3 Preparation of Sampling Train. Follow the general procedure given in Method 5, Section 8.3.

8.4 Leak-Check Procedures. Same as Method 5, Section 8.4.

8.5 Sampling Train Operation. Follow the general procedure given in Method 5, Section 8.5, except maintain isokinetic sampling flow rates below 28 liters/min (1.0 cfm). For each run, record the data required on a data sheet similar to the one shown in Figure 108–2.

8.6 Calculation of Percent Isokinetic. Same as Method 5, Section 8.6.

8.7 Sample Recovery. Same as Method 5, Section 8.7, except that 0.1 N NaOH is used as the cleanup solvent instead of acetone and that the impinger water is treated as follows:

8.7.1 Container Number 4 (Impinger Water). Clean each of the first three impingers and connecting glassware in the following manner:

8.7.1.1 Wipe the impinger ball joints free of silicone grease, and cap the joints.

8.7.1.2 Rotate and agitate each of the first two impingers, using the impinger contents as a rinse solution.

8.7.1.3 Transfer the liquid from the first three impingers to Container Number 4. Remove the outlet ball-joint cap, and drain the contents through this opening. Do not separate the impinger parts (inner and outer tubes) while transferring their contents to the container.

8.7.1.4 Weigh the contents of Container No. 4 to within 0.5 g. Record in the log the weight of liquid along with a notation of any color or film observed in the impinger catch. The weight of liquid is needed along with the silica gel data to calculate the stack gas moisture content.

Note: Measure and record the total amount of 0.1 N NaOH used for rinsing under Sections 8.7.1.5 and 8.7.1.6.

8.7.1.5 Pour approximately 30 ml of 0.1 NaOH into each of the first two impingers, and agitate the impingers. Drain the 0.1 N NaOH through the outlet arm of each impinger into Container Number 4. Repeat this operation a second time; inspect the impingers for any abnormal conditions.

8.7.1.6 Wipe the ball joints of the glassware connecting the impingers and the back half of the filter holder free of silicone grease, and rinse each piece of glassware twice with 0.1 N NaOH; transfer this rinse into Container Number 4. (DO NOT RINSE or brush the glass-fritted filter support.) Mark the height of the fluid level to determine whether leakage occurs during transport. Label the container to identify clearly its contents.

8.8 Blanks.

8.8.1 Sodium Hydroxide. Save a portion of the 0.1 N NaOH used for cleanup as a blank. Take 200 ml of this solution directly from the wash bottle being used and place it in a plastic sample container labeled “NaOH blank.”

8.8.2 Water. Save a sample of the water, and place it in a container labeled “H_2O blank.”

8.8.3 Filter. Save two filters from each lot of filters used in sampling. Place these filters in a container labeled “filter blank.”

9.0 Quality Control

9.1 Miscellaneous Quality Control Measures.

Section	Quality control measure	Effect
8.4, 10.1	Sampling equipment leak-checks and calibration	Ensures accuracy and precision of sampling measurements.
10.4	Spectrophotometer calibration	Ensures linearity of spectrophotometer response to standards.
11.5	Check for matrix effects	Eliminates matrix effects.
11.6	Audit sample analysis	Evaluates analyst's technique and standards preparation.

9.2 Volume Metering System Checks. Same as Method 5, Section 9.2.

10.0 Calibration and Standardization

Note: Maintain a laboratory log of all calibrations.

10.1 Sampling Equipment. Same as Method 5, Section 10.0.

10.2 Preparation of Standard Solutions.

10.2.1 For the high level procedure, pipet 1, 3, 5, 8, and 10 ml of the 1.0 mg As/ml stock solution into separate 100 ml volumetric flasks, each containing 5 ml of concentrated HNO_3. Dilute to the mark with water.

10.2.2 For the low level vapor generator procedure, pipet 1, 2, 3, and 5 ml of 1.0 µg As/ml standard solution into separate reaction tubes. Dilute to the mark with water.

10.2.3 For the low level graphite furnace procedure, pipet 1, 5, 10 and 15 ml of 1.0 µg As/ml standard solution into separate flasks along with 2 ml of the 5 percent nickel nitrate solution and 10 ml of the 3 percent H_2O_2solution. Dilute to the mark with water.

10.3 Calibration Curve. Analyze a 0.8 N HNO_3blank and each standard solution according to the procedures outlined in section 11.4.1. Repeat this procedure on each standard solution until two consecutive peaks agree within 3 percent of their average value. Subtract the average peak height (or peak area) of the blank—which must be less than 2 percent of recorder full scale—from the averaged peak height of each standard solution. If the blank absorbance is greater than 2 percent of full-scale, the probable cause is As contamination of a reagent or carry-over of As from a previous sample. Prepare the calibration curve by plotting the corrected peak height of each standard solution versus the corresponding final total As weight in the solution.

10.4 Spectrophotometer Calibration Quality Control. Calculate the least squares slope of the calibration curve. The line must pass through the origin or through a point no further from the origin than ±2 percent of the recorder full scale. Multiply the corrected peak height by the reciprocal of the least squares slope to determine the distance each calibration point lies from the theoretical calibration line. The difference between the calculated concentration values and the actual concentrations (*e.g.,* 1, 3, 5, 8, and 10 mg As for the high-level procedure) must be less than 7 percent for all standards.

Note: For instruments equipped with direct concentration readout devices, preparation of a standard curve will not be necessary. In all cases, follow calibration and operational procedures in the manufacturers' instruction manual.

11.0 Analytical Procedure

11.1 Sample Loss Check. Prior to analysis, check the liquid level in Containers Number 2 and Number 4. Note on the analytical data sheet whether leakage occurred during transport. If a noticeable amount of leakage occurred, either void the sample or take steps, subject to the approval of the Administrator, to adjust the final results.

11.2 Sample Preparation.

11.2.1 Container Number 1 (Filter). Place the filter and loose particulate matter in a 150 ml beaker. Also, add the filtered solid material from Container Number 2 (see Section 11.2.2). Add 50 ml of 0.1 N NaOH. Then stir and warm on a hot plate at low heat (do not boil) for about 15 minutes. Add 10 ml of concentrated HNO_3, bring to a boil, then simmer for about 15 minutes. Filter the solution through a glass fiber filter. Wash with hot water, and catch the filtrate in a clean 150 ml beaker. Boil the filtrate, and evaporate to dryness. Cool, add 5 ml of 50 percent HNO_3, and then warm and stir. Allow to cool. Transfer to a 50-ml volumetric flask, dilute to volume with water, and mix well.

11.2.2 Container Number 2 (Probe Wash).

11.2.2.1 Filter (using a glass fiber filter) the contents of Container Number 2 into a 200 ml volumetric flask. Combine the filtered (solid) material with the contents of Container Number 1 (Filter).

11.2.2.2 Dilute the filtrate to exactly 200 ml with water. Then pipet 50 ml into a 150 ml beaker. Add 10 ml of concentrated HNO_3, bring to a boil, and evaporate to dryness. Allow to cool, add 5 ml of 50 percent HNO_3, and then warm and stir. Allow the solution to cool, transfer to a 50-ml volumetric flask, dilute to volume with water, and mix well.

11.2.3 Container Number 4 (Impinger Solution). Transfer the contents of Container Number 4 to a 500 ml volumetric flask, and dilute to exactly 500-ml with water. Pipet 50 ml of the solution into a 150-ml beaker. Add 10 ml of concentrated HNO_3, bring to a boil, and evaporate to dryness. Allow to cool, add 5 ml of 50 percent HNO_3, and then warm and stir. Allow the solution to cool, transfer to a 50-ml volumetric flask, dilute to volume with water, and mix well.

11.2.4 Filter Blank. Cut each filter into strips, and treat each filter individually as directed in Section 11.2.1, beginning with the sentence, “Add 50 ml of 0.1 N NaOH.”

11.2.5 Sodium Hydroxide and Water Blanks. Treat separately 50 ml of 0.1 N NaOH and 50 ml water, as directed under Section 11.2.3, beginning with the sentence, “Pipet 50 ml of the solution into a 150-ml beaker.”

11.3 Spectrophotometer Preparation. Turn on the power; set the wavelength, slit width, and lamp current. Adjust the background corrector as instructed by the manufacturer's manual for the particular atomic absorption spectrophotometer. Adjust the burner and flame characteristics as necessary.

11.4 Analysis. Calibrate the analytical equipment and develop a calibration curve as outlined in Sections 10.2 through 10.4.

11.4.1 Arsenic Samples. Analyze an appropriately sized aliquot of each diluted sample (from Sections 11.2.1 through 11.2.3) until two consecutive peak heights agree within 3 percent of their average value. If applicable, follow the procedures outlined in Section 11.4.1.1. If the sample concentration falls outside the range of the calibration curve, make an appropriate dilution with 0.8 N HNO_3so that the final concentration falls within the range of the curve. Using the calibration curve, determine the arsenic concentration in each sample fraction.

Note: Because instruments vary between manufacturers, no detailed operating instructions will be given here. Instead, the instrument manufacturer's detailed operating instructions should be followed.

11.4.1.1 Arsenic Determination at Low Concentration. The lower limit of flame AAS is 10 µg As/ml. If the arsenic concentration of any sample is at a lower level, use the graphite furnace or vapor generator which is available as an accessory component. Flame, graphite furnace, or vapor generators may be used for samples whose concentrations are between 10 and 30 µg/ml. Follow the manufacturer's instructions in the use of such equipment.

11.4.1.1.1 Vapor Generator Procedure. Place a sample containing between 0 and 5 µg of arsenic in the reaction tube, and dilute to 15 ml with water. Since there is some trial and error involved in this procedure, it may be necessary to screen the samples by conventional atomic absorption until an approximate concentration is determined. After determining the approximate concentration, adjust the volume of the sample accordingly. Pipet 15 ml of concentrated HCl into each tube. Add 1 ml of 30 percent KI solution. Place the reaction tube into a 50 °C (120 °F) water bath for 5 minutes. Cool to room temperature. Connect the reaction tube to the vapor generator assembly. When the instrument response has returned to baseline, inject 5.0 ml of 5 percent $NaBH_4$, and integrate the resulting spectrophotometer signal over a 30-second time period.

11.4.1.1.2 Graphite Furnace Procedure. Dilute the digested sample so that a 5 ml aliquot contains less than 1.5 µg of arsenic. Pipet 5 ml of this digested solution into a 10-ml volumetric flask. Add 1 ml of the 1 percent nickel nitrate solution, 0.5 ml of 50 percent HNO_3, and 1 ml of the 3 percent hydrogen peroxide and dilute to 10 ml with water. The sample is now ready for analysis.

11.4.1.2 Run a blank (0.8 N HNO_3) and standard at least after every five samples to check the spectrophotometer calibration. The peak height of the blank must pass through a point no further from the origin than ±2 percent of the recorder full scale. The difference between the measured concentration of the standard (the product of the corrected average peak height and the reciprocal of the least squares slope) and the actual concentration of the standard must be less than 7 percent, or recalibration of the analyzer is required.

11.4.1.3 Determine the arsenic concentration in the filter blank (i.e., the average of the two blank values from each lot).

11.4.2 Container Number 3 (Silica Gel). This step may be conducted in the field. Weigh the spent silica gel (or silica gel plus impinger) to the nearest 0.5 g; record this weight.

11.5 Check for matrix effects on the arsenic results. Same as Method 12, Section 11.5.

11.6 Audit Sample Analysis.

11.6.1 When the method is used to analyze samples to demonstrate compliance with a source emission regulation, a set of EPA audit samples must be analyzed, subject to availability.

11.6.2 Concurrently analyze the audit samples and the compliance samples in the same manner to evaluate the technique of the analyst and the standards preparation.

Note: It is recommended that known quality control samples be analyzed prior to the compliance and audit sample analyses to optimize the system accuracy and precision. These quality control samples may be obtained by contacting the appropriate EPA regional Office or the responsible enforcement authority.

11.6.3 The same analyst, analytical reagents, and analytical system shall be used for the compliance samples and the EPA audit samples. If this condition is met, duplicate auditing of subsequent compliance analyses for the same enforcement agency within a 30-day period is waived. An audit sample set may not be used to validate different sets of compliance samples under the jurisdiction of separate enforcement agencies, unless prior arrangements have been made with both enforcement agencies.

11.7 Audit Sample Results.

11.7.1 Calculate the audit sample concentrations in $g/m_3$and submit results using the instructions provided with the audit samples.

11.7.2 Report the results of the audit samples and the compliance determination samples along with their identification numbers, and the analyst's name to the responsible enforcement authority. Include this information with reports of any subsequent compliance analyses for the same enforcement authority during the 30-day period.

11.7.3 The concentrations of the audit samples obtained by the analyst shall agree within 10 percent of the actual concentrations. If the 10 percent specification is not met, reanalyze the compliance and audit samples, and include initial and reanalysis values in the test report.

11.7.4 Failure to meet the 10 percent specification may require retests until the audit problems are resolved. However, if the audit results do not affect the compliance or noncompliance status of the affected facility, the Administrator may waive the reanalysis requirement, further audits, or retests and accept the results of the compliance test. While steps are being taken to resolve audit analysis problems, the Administrator may also choose to use the data to determine the compliance or noncompliance status of the affected facility.

12.0 Data Analysis and Calculations

12.1 Nomenclature.

B_{ws}= Water in the gas stream, proportion by volume.

C_a= Concentration of arsenic as read from the standard curve, µg/ml.

C_c= Actual audit concentration, g/m^3 .

C_d= Determined audit concentration, g/m^3 .

C_s= Arsenic concentration in stack gas, dry basis, converted to standard conditions, g/dsm^3 (gr/dscf).

E_a= Arsenic mass emission rate, g/hr (lb/hr).

F_d= Dilution factor (equals 1 if the sample has not been diluted).

I = Percent of isokinetic sampling.

m_{bi}= Total mass of all four impingers and contents before sampling, g.

m_{fi}= Total mass of all four impingers and contents after sampling, g.

m_n= Total mass of arsenic collected in a specific part of the sampling train, µg.

m_t= Total mass of arsenic collected in the sampling train, µg.

T_m= Absolute average dry gas meter temperature (see Figure 108–2), °K (°R).

V_m= Volume of gas sample as measured by the dry gas meter, dry basis, m^3 (ft^3).

Vm(std)= Volume of gas sample as measured by the dry gas meter, corrected to standard conditions, m^3 (ft^3).

V_n= Volume of solution in which the arsenic is contained, ml.

Vw(std)= Volume of water vapor collected in the sampling train, corrected to standard conditions, m^3 (ft^3).

ΔH = Average pressure differential across the orifice meter (see Figure 108–2), mm H_2O (in. H_2O).

12.2 Average Dry Gas Meter Temperatures (T_m) and Average Orifice Pressure Drop (ΔH). See data sheet (Figure 108–2).

12.3 Dry Gas Volume. Using data from this test, calculate Vm(std)according to the procedures outlined in Method 5, Section 12.3.

12.4 Volume of Water Vapor.

$$V_{w(std)} = K_2\left(m_{fi} - m_{bi}\right) \qquad \text{Eq. 108-1}$$

Where:

K_2= 0.001334 m^3 /g for metric units.

= 0.047012 ft^3 /g for English units.

12.5 Moisture Content.

$$B_{ws} = \frac{V_{w(std)}}{V_{m(std)} + V_{w(std)}} \qquad \text{Eq. 108-2}$$

12.6 Amount of Arsenic Collected.

12.6.1 Calculate the amount of arsenic collected in each part of the sampling train, as follows:

$$m_n = C_a F_d V_n \qquad \text{Eq. 108-3}$$

12.6.2 Calculate the total amount of arsenic collected in the sampling train as follows:

$$m_t = m_{(\text{filters})} + m_{(\text{probe})} + m_{(\text{impingers})} - m_{(\text{filter blank})} - m_{(\text{NaOH blank})} - m_{(\text{water blank})} \qquad \text{Eq. 108-4}$$

12.7 Calculate the arsenic concentration in the stack gas (dry basis, adjusted to standard conditions) as follows:

$$C_s = K_3\left(m_t / V_{m(std)}\right) \qquad \text{Eq. 108-5}$$

Where:

K_3= 10^{-6}g/μg for metric units

= 1.54 × 10^{-5}gr/μg for English units

12.8 Stack Gas Velocity and Volumetric Flow Rate. Calculate the average stack gas velocity and volumetric flow rate using data obtained in this method and the equations in Sections 12.2 and 12.3 of Method 2.

12.9 Pollutant Mass Rate. Calculate the arsenic mass emission rate as follows:

$$E_a = C_s Q_{sd} \qquad \text{Eq. 108-6}$$

12.10 Isokinetic Variation. Same as Method 5, Section 12.11.

13.0 Method Performance

13.1 Sensitivity. The lower limit of flame AAS 10 µg As/ml. The analytical procedure includes provisions for the use of a graphite furnace or vapor generator for samples with a lower arsenic concentration.

14.0 Pollution Prevention.[Reserved]

15.0 Waste Management.[Reserved]

16.0 References.

Same as References 1 through 9 of Method 5, Section 17.0, with the addition of the following:

1. Perkin Elmer Corporation. Analytical Methods for Atomic Absorption Spectrophotometry. 303–0152. Norwalk, Connecticut. September 1976. pp. 5–6.

2. Standard Specification for Reagent Water. In: Annual Book of American Society for Testing and Materials Standards. Part 31: Water, Atmospheric Analysis. American Society for Testing and Materials. Philadelphia, PA. 1974. pp. 40–42.

3. Stack Sampling Safety Manual (Draft). U.S. Environmental Protection Agency, Office of Air Quality Planning and Standard, Research Triangle Park, NC. September 1978.

17.0 Tables, Diagrams, Flowcharts, and Validation Data

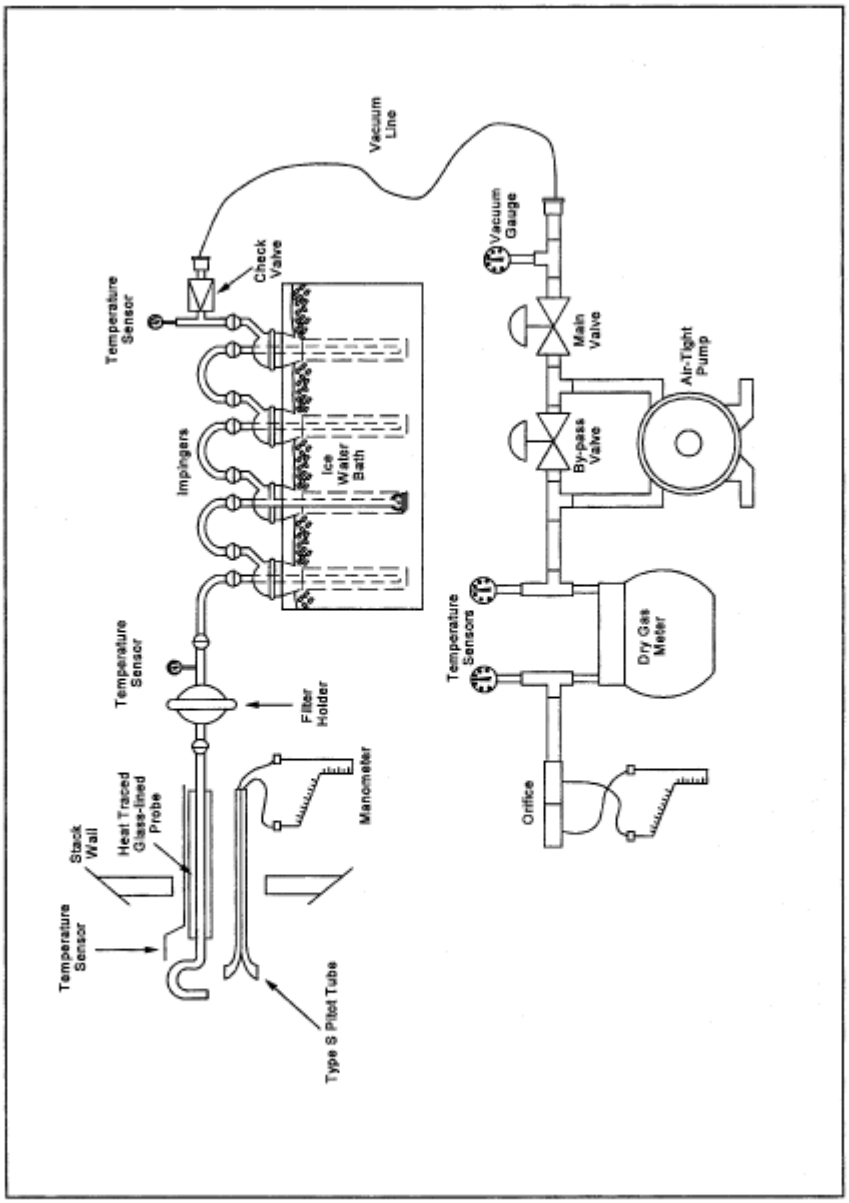

Figure 108-1. Arsenic Sampling Train

View or download PDF

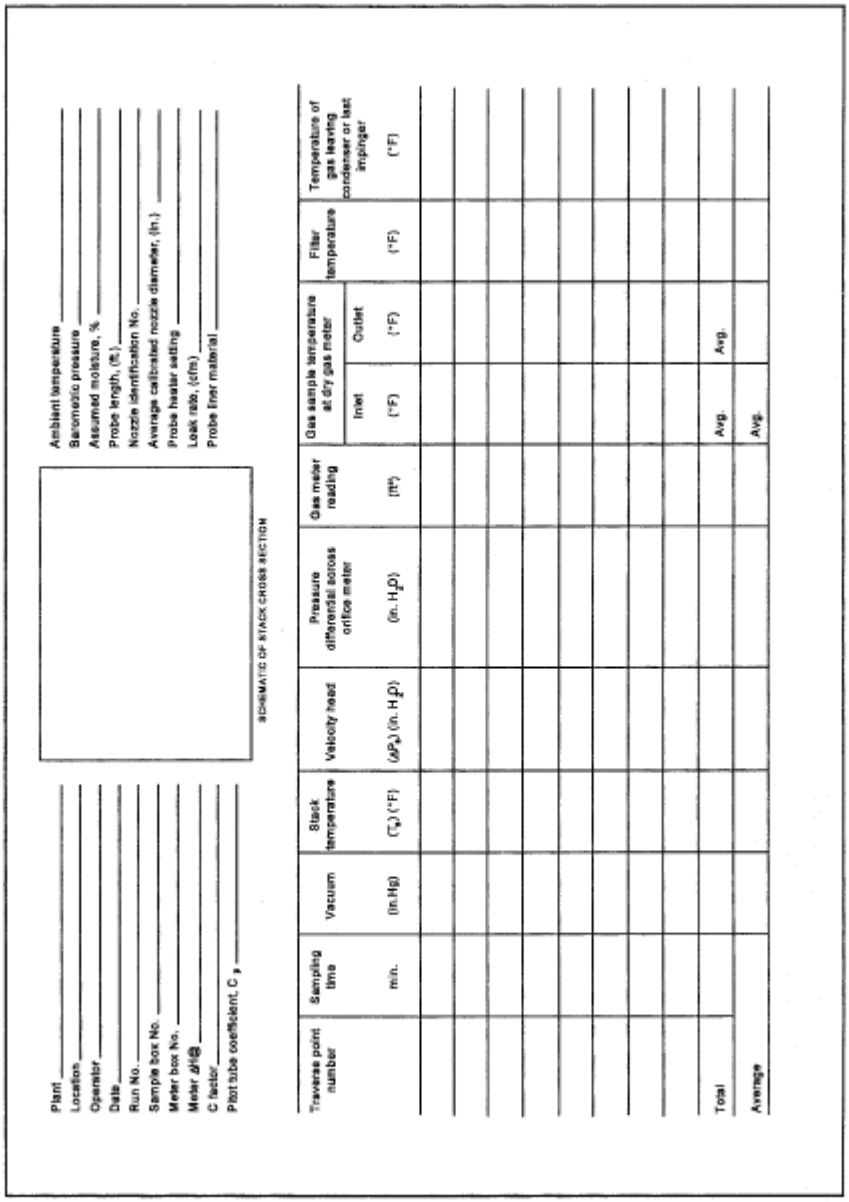

Plant ____
Location ____
Operator ____
Date ____
Run No. ____
Sample box No. ____
Meter box No. ____
Meter $\Delta H@$ ____
C factor ____
Pitot tube coefficient, C_p ____

SCHEMATIC OF STACK CROSS SECTION

Ambient temperature ____
Barometric pressure ____
Assumed moisture, % ____
Probe length, (ft.) ____
Nozzle identification No. ____
Average calibrated nozzle diameter, (in.) ____
Probe heater setting ____
Leak rate, (cfm) ____
Probe liner material ____

Traverse point number	Sampling time	Vacuum	Stack temperature	Velocity head	Pressure differential across orifice meter	Gas meter reading	Gas sample temperature at dry gas meter		Filter temperature	Temperature of gas leaving condenser or last impinger
							Inlet	Outlet		
	min.	(in.Hg)	(T_s) (°F)	(ΔP_s) (in. H_2O)	(in. H_2O)	(ft^3)	(°F)	(°F)	(°F)	(°F)
Total							Avg.	Avg.		
Average							Avg.			

Figure 108-2. Arsenic Field Data Sheet.

View or download PDF

Method 108A—Determination of Arsenic Content in Ore Samples From Nonferrous Smelters

Note: This method does not include all of the specifications (*e.g.,* equipment and supplies) and procedures (*e.g.,* sampling and analytical) essential to its performance. Some material is incorporated by reference from other methods in appendix A to 40 CFR part 60. Therefore, to obtain reliable results, persons using this method should have a thorough knowledge of Method 12.

1.0 Scope and Application

1.1 Analytes.

Analyte	CAS No.	Sensitivity
Arsenic compounds as arsenic (As)	7440–38–2	Lower limit 10 µg/ml or less.

1.2 Applicability. This method applies to the determination of inorganic As content of process ore and reverberatory matte samples from nonferrous smelters and other sources as specified in an applicable subpart of the regulations.

1.3 Data Quality Objectives. Adherence to the requirements of this method will enhance the quality of the data obtained from air pollutant sampling methods.

2.0 Summary of Method

Arsenic bound in ore samples is liberated by acid digestion and analyzed by flame atomic absorption spectrophotometry (AAS).

3.0 Definitions[Reserved]

4.0 Interferences

Analysis for As by flame AAS is sensitive to the chemical composition and to the physical properties (*e.g.,* viscosity, pH) of the sample. The analytical procedure includes a check for matrix effects (section 11.5).

5.0 Safety

5.1 Disclaimer. This method may involve hazardous materials, operations, and equipment. This test method may not address all of the safety problems associated with its use. It is the responsibility of the user to establish appropriate safety and health practices and determine the applicability of regulatory limitations prior to performing this test method.

5.2 Corrosive Reagents. The following reagents are hazardous. Personal protective equipment and safe procedures that prevent chemical splashes are recommended. If contact occurs, immediately flush with copious amounts of water for at least 15 minutes. Remove clothing under shower and decontaminate. Treat residual chemical burns as thermal burns.

5.2.1 Hydrochloric Acid (HCl). Highly corrosive liquid with toxic vapors. Vapors are highly irritating to eyes, skin, nose, and lungs, causing severe damage. May cause bronchitis, pneumonia, or edema of lungs. Exposure to concentrations of 0.13 to 0.2 percent can be lethal to humans in a few minutes. Provide ventilation to limit exposure. Reacts with metals, producing hydrogen gas.

5.2.2 Hydrofluoric Acid (HF). Highly corrosive to eyes, skin, nose, throat, and lungs. Reaction to exposure may be delayed by 24 hours or more. Provide ventilation to limit exposure.

5.2.3 Hydrogen Peroxide (H_2O_2). Very harmful to eyes. 30% H_2O_2can burn skin, nose, and lungs.

5.2.4 Nitric Acid (HNO_3). Highly corrosive to eyes, skin, nose, and lungs. Vapors are highly toxic and can cause bronchitis, pneumonia, or edema of lungs. Reaction to inhalation may be delayed as long as 30 hours and still be fatal. Provide ventilation to limit exposure. Strong oxidizer. Hazardous reaction may occur with organic materials such as solvents.

5.2.5 Sodium Hydroxide (NaOH). Causes severe damage to eyes and skin. Inhalation causes irritation to nose, throat, and lungs. Reacts exothermically with limited amounts of water.

6.0 Equipment and Supplies

6.1 Sample Collection and Preparation. The following items are required for sample collection and preparation:

6.1.1 Parr Acid Digestion Bomb. Stainless steel with vapor-tight Teflon cup and cover.

6.1.2 Volumetric Pipets. 2- and 5-ml sizes.

6.1.3 Volumetric Flask. 50-ml polypropylene with screw caps, (one needed per standard).

6.1.4 Funnel. Polyethylene or polypropylene.

6.1.5 Oven. Capable of maintaining a temperature of approximately 105 °C (221 °F).

6.1.6 Analytical Balance. To measure to within 0.1 mg.

6.2 Analysis. The following items are required for analysis:

6.2.1 Spectrophotometer and Recorder. Equipped with an electrodeless discharge lamp and a background corrector to measure absorbance at 193.7 nm. For measuring samples having less than 10 µg As/ml, use a graphite furnace or vapor generator accessory. The recorder shall match the output of the spectrophotometer.

6.2.2 Volumetric Flasks. Class A, 50-ml (one needed per sample and blank), 500-ml, and 1-liter.

6.2.3 Volumetric Pipets. Class A, 1-, 5-, 10-, and 25-ml sizes.

7.0 Reagents and Standards.

Unless otherwise indicated, it is intended that all reagents conform to the specifications established by the Committee on Analytical Reagents of the American Chemical Society, where such specifications are available; otherwise, use the best available grade.

7.1 Sample Collection and Preparation. The following reagents are required for sample collection and preparation:

7.1.1 Water. Deionized distilled to meet ASTM D 1193–77 or 91 Type 3 (incorporated by reference—See §61.18). When high concentrations of organic matter are not expected to be present, the $KMnO_4$test for oxidizable organic matter may be omitted. Use in all dilutions requiring water.

7.1.2 Nitric Acid Concentrated.

7.1.3 Nitric Acid, 0.5 N. In a 1-liter volumetric flask containing water, add 32 ml of concentrated $HNO_3$and dilute to volume with water.

7.1.4 Hydrofluoric Acid, Concentrated.

7.1.5 Potassium Chloride (KCl) Solution, 10 percent weight by volume (W/V). Dissolve 10 g KCl in water, add 3 ml concentrated HNO_3, and dilute to 100 ml.

7.1.6 Filter. Teflon filters, 3-micron porosity, 47-mm size. (Available from Millipore Co., type FS, Catalog Number FSLW04700.)

7.1.7 Sodium Borohydride ($NaBH_4$), 5 Percent (W/V). Dissolve 50.0 g of $NaBH_4$in about 500 ml of 0.1 N NaOH in a 1-liter volumetric flask. Then, dilute to exactly 1.0 liter with 0.1 N NaOH.

7.1.8 Nickel Nitrate, 5 Percent Ni (W/V). Dissolve 24.780 g of nickel nitrate hexahydrate [$Ni(NO_3)_2 6H_2O$] in water in a 100-ml volumetric flask, and dilute to 100 ml with water.

7.1.9 Nickel Nitrate, 1 Percent Ni (W/V). Pipet 20 ml of 5 percent nickel nitrate solution into a 100-ml volumetric flask, and dilute to 100 ml with water.

7.2 Analysis. The following reagents and standards are required for analysis:

7.2.1 Water. Same as in Section 7.1.1.

7.2.2 Sodium Hydroxide, 0.1 N. Dissolve 2.00 g of NaOH in water in a 500-ml volumetric flask. Dilute to volume with water.

7.2.3 Nitric Acid, 0.5 N. Same as in Section 7.1.3.

7.2.4 Potassium Chloride Solution, 10 percent. Same as in Section 7.1.5.

7.2.5 Hydrochloric Acid, Concentrated.

7.2.6 Potassium Iodide (KI), 30 Percent (W/V). Dissolve 300 g of KI in about 500 ml of water in a 1-liter volumetric flask. Then, dilute to exactly 1.0 liter with water.

7.2.7 Hydrogen Peroxide, 3 Percent by Volume. Pipet 50 ml of 30 percent H_2O_2into a 500-ml volumetric flask, and dilute to exactly 500 ml with water.

7.2.8 Stock Arsenic Standard, 1 mg As/ml. Dissolve 1.3203 g of primary grade As_2O_3in 20 ml of 0.1 N NaOH. Slowly add 30 ml of concentrated HNO_3, and heat in an oven at 105 °C (221 °F) for 2 hours. Allow to cool, and dilute to 1 liter with deionized distilled water.

7.2.9 Nitrous Oxide. Suitable quality for AAS analysis.

7.2.10 Acetylene. Suitable quality for AAS analysis.

7.2.11 Quality Assurance Audit Samples. When making compliance determinations, and upon availability, audit samples may be obtained from the appropriate EPA regional Office or from the responsible enforcement authority.

Note: The responsible enforcement authority should be notified at least 30 days prior to the test date to allow sufficient time for sample delivery.

8.0 Sample Collection, Preservation, Transport, and Storage

8.1 Sample Collection. A sample that is representative of the ore lot to be tested must be taken prior to analysis. (A portion of the samples routinely collected for metals analysis may be used provided the sample is representative of the ore being tested.)

8.2 Sample Preparation. The sample must be ground into a finely pulverized state.

9.0 Quality Control

Section	Quality control measure	Effect
10.2	Spectrophotometer calibration	Ensure linearity of spectrophotometer response to standards.
11.5	Check for matrix effects	Eliminate matrix effects
11.6	Audit sample analysis	Evaluate analyst's technique and standards preparation.

10.0 Calibration and Standardizations

Note: Maintain a laboratory log of all calibrations.

10.1 Preparation of Standard Solutions. Pipet 1, 5, 10, and 25 ml of the stock As solution into separate 100-ml volumetric flasks. Add 10 ml KCl solution and dilute to the mark with 0.5 N HNO_3. This will give standard concentrations of 10, 50, 100, and 250 µg As/ml. For low-level arsenic samples that require the use of a graphite furnace or vapor generator, follow the procedures in Section 11.3:1. Dilute 10 ml of KCl solution to 100 ml with 0.5 N $HNO_3$and use as a reagent blank.

10.2 Calibration Curve. Analyze the reagent blank and each standard solution according to the procedures outlined in Section 11.3. Repeat this procedure on each standard solution until two consecutive peaks agree within 3 percent of their average value. Subtract the average peak height (or peak area) of the blank—which must be less than 2 percent of recorder full scale—from the averaged peak heights of each standard solution. If the blank absorbance is greater than 2 percent of full-scale, the probable cause is Hg contamination of a reagent or carry-over of As from a previous sample. Prepare the calibration curve by plotting the corrected peak height of each standard solution versus the corresponding final total As weight in the solution.

10.3 Spectrophotometer Calibration Quality Control. Calculate the least squares slope of the calibration curve. The line must pass through the origin or through a point no further from the origin than ±2 percent of the recorder full scale. Multiply the corrected peak height by the reciprocal of the least squares slope to determine the distance each calibration point lies from the theoretical calibration line. The difference between the calculated concentration values and the actual concentrations must be less than 7 percent for all standards.

Note: For instruments equipped with direct concentration readout devices, preparation of a standard curve will not be necessary. In all cases, follow calibration and operational procedures in the manufacturer's instruction manual.

11.0 Analytical Procedure

11.1 Sample Preparation. Weigh 50 to 500 mg of finely pulverized sample to the nearest 0.1 mg. Transfer the sample into the Teflon cup of the digestion bomb, and add 2 ml each of concentrated $HNO_3$and HF. Seal the bomb immediately to prevent the loss of any volatile arsenic compounds that may form. Heat in an oven at 105 °C (221 °F) for 2 hours. Remove the bomb from the oven and allow to cool. Using a Teflon filter, quantitatively filter the digested sample into a 50-ml polypropylene volumetric flask. Rinse the bomb three times with small portions of 0.5 N HNO_3, and filter the rinses into the flask. Add 5 ml of KCl solution to the flask, and dilute to 50 ml with 0.5 N HNO_3.

11.2 Spectrophotometer Preparation.

11.2.1 Turn on the power; set the wavelength, slit width, and lamp current. Adjust the background corrector as instructed by the manufacturer's manual for the particular atomic absorption spectrophotometer. Adjust the burner and flame characteristics as necessary.

11.2.2 Develop a spectrophotometer calibration curve as outlined in Sections 10.2 and 10.3.

11.3 Arsenic Determination. Analyze an appropriately sized aliquot of each diluted sample (from Section 11.1) until two consecutive peak heights agree within 3 percent of their average value. If applicable, follow the procedures outlined in Section 11.3.1. If the sample concentration falls outside the range of the calibration curve, make an appropriate dilution with 0.5 N HNO_3so that the final concentration falls within the range of the curve. Using the calibration curve, determine the As concentration in each sample.

Note: Because instruments vary between manufacturers, no detailed operating instructions will be given here. Instead, the instrument manufacturer's detailed operating instructions should be followed.

11.3.1 Arsenic Determination at Low Concentration. The lower limit of flame AAS is 10 µg As/ml. If the arsenic concentration of any sample is at a lower level, use the vapor generator or graphite furnace which is available as an accessory component. Flame, graphite furnace, or vapor generators may be used for samples whose concentrations are between 10 and 30 µg/ml. Follow the manufacturer's instructions in the use of such equipment.

11.3.1.1 Vapor Generator Procedure. Place a sample containing between 0 and 5 µg of arsenic in the reaction tube, and dilute to 15 ml with water. Since there is some trial and error involved in this procedure, it may be necessary to screen the samples by conventional AAS until an approximate concentration is determined. After determining the approximate concentration, adjust the volume of the sample accordingly. Pipet 15 ml of concentrated HCl into each tube. Add 1 ml of 30 percent KI solution. Place the reaction tube into a 50 °C (120 °F) water bath for 5 minutes. Cool to room temperature. Connect the reaction tube to the vapor generator assembly. When the instrument response has returned to baseline, inject 5.0 ml of 5 percent $NaBH_4$and integrate the resulting spectrophotometer signal over a 30-second time period.

11.3.1.2 Graphite Furnace Procedure. Pipet 5 ml of the digested solution into a 10-ml volumetric flask. Add 1 ml of the 1 percent nickel nitrate solution, 0.5 ml of 50 percent HNO_3, and 1 ml of the 3 percent H_2O_2, and dilute to 10 ml with water. The sample is now ready to inject in the furnace for analysis.

11.4 Run a blank and standard at least after every five samples to check the spectrophotometer calibration. The peak height of the blank must pass through a point no further from the origin than ±2 percent of the recorder full scale. The difference between the measured concentration of the standard (the product of the corrected average peak height and the reciprocal of the least squares slope) and the actual concentration of the standard must be less than 7 percent, or recalibration of the analyzer is required.

11.5 Mandatory Check for Matrix Effects on the Arsenic Results. Same as Method 12, Section 11.5.

11.6 Audit Sample Analysis.

11.6.1 When the method is used to analyze samples to demonstrate compliance with a source emission regulation, a set of EPA audit samples must be analyzed, subject to availability.

11.6.2 Concurrently analyze the audit samples and the compliance samples in the same manner to evaluate the technique of the analyst and the standards preparation.

Note: It is recommended that known quality control samples be analyzed prior to the compliance and audit sample analyses to optimize the system accuracy and precision. These quality control samples may be obtained by contacting the appropriate EPA regional Office or the responsible enforcement authority.

11.6.3 The same analyst, analytical reagents, and analytical system shall be used for the compliance samples and the EPA audit samples. If this condition is met, duplicate auditing of subsequent compliance analyses for the same enforcement agency within a 30-day period is waived. An audit sample set may not be used to validate different sets of compliance samples under the jurisdiction of separate enforcement agencies, unless prior arrangements have been made with both enforcement agencies.

11.7 Audit Sample Results.

11.7.1 Calculate the audit sample concentrations in g/m^3 and submit results using the instructions provided with the audit samples.

11.7.2 Report the results of the audit samples and the compliance determination samples along with their identification numbers, and the analyst's name to the responsible enforcement authority. Include this information with reports of any subsequent compliance analyses for the same enforcement authority during the 30-day period.

11.7.3 The concentrations of the audit samples obtained by the analyst shall agree within 10 percent of the actual concentrations. If the 10 percent specification is not met, reanalyze the compliance and audit samples, and include initial and reanalysis values in the test report.

11.7.4 Failure to meet the 10 percent specification may require retests until the audit problems are resolved. However, if the audit results do not affect the compliance or noncompliance status of the affected facility, the Administrator may waive the reanalysis requirement, further audits, or retests and accept the results of the compliance test. While steps are being taken to resolve audit analysis problems, the Administrator may also choose to use the data to determine the compliance or noncompliance status of the affected facility.

12.0 Data Analysis and Calculations

12.1 Calculate the percent arsenic in the ore sample as follows:

$$\% As = \frac{5 C_a F_d}{W} \qquad Eq.\ 108A\text{-}1$$

Where:

C_a= Concentration of As as read from the standard curve, µg/ml.

F_d= Dilution factor (equals to 1 if the sample has not been diluted).

W = Weight of ore sample analyzed, mg.

5 = (50 ml sample “ 100)/(10^3 µg/mg).

13.0 Method Performance

13.1 Sensitivity. The lower limit of flame AAS is 10 µg As/ml. The analytical procedure includes provisions for the use of a graphite furnace or vapor generator for samples with a lower arsenic concentration.

14.0 Pollution Prevention.[Reserved]

15.0 Waste Management.[Reserved]

16.0 References

Same as References 1 through 9 of Section 17.0 of Method 5, with the addition of the following:

1. Perkin Elmer Corporation. Analytical Methods of Atomic Absorption Spectrophotometry. 303–0152. Norwalk, Connecticut. September 1976. pp 5–6.

2. Ringwald, D. Arsenic Determination on Process Materials from ASARCO's Copper Smelter in Tacoma, Washington. Unpublished Report. Prepared for Emission Measurement Branch, Emission Standards and

Engineering Division, U.S. Environmental Protection Agency, Research Triangle Park, North Carolina. August 1980. 35 pp.

3. Stack Sampling Safety Manual (Draft). U.S. Environmental Protection Agency, Office of Air Quality Planning and Standard, Research Triangle Park, NC. September 1978.

17.0 Tables, Diagrams, Flowcharts, and Validation Data.[Reserved]

Method 108B—Determination of Arsenic Content in Ore Samples From Nonferrous Smelters

Note: This method does not include all of the specifications (*e.g.,* equipment and supplies) and procedures (*e.g.,* sampling and analytical) essential to its performance. Some material is incorporated by reference from other methods in this appendix and in appendix A to 40 CFR part 60. Therefore, to obtain reliable results, persons using this method should have a thorough knowledge of at least the following additional test methods: Method 12 and Method 108A.

1.0 Scope and Application

1.1 Analytes.

Analyte	CAS No.	Sensitivity
Arsenic compounds as arsenic (As)	7440–38–2	Lower limit 10 µg/ml.

1.2 Applicability. This method applies to the determination of inorganic As content of process ore and reverberatory matte samples from nonferrous smelters and other sources as specified in an applicable subpart of the regulations. Samples resulting in an analytical concentration greater than 10 µg As/ml may be analyzed by this method. For lower level arsenic samples, Method 108C should be used.

1.3 Data Quality Objectives. Adherence to the requirements of this method will enhance the quality of the data obtained from air pollutant sampling methods.

2.0 Summary of Method

Arsenic bound in ore samples is liberated by acid digestion and analyzed by flame atomic absorption spectrophotometry (AAS).

3.0 Definitions[Reserved]

4.0 Interferences

Analysis for As by flame AAS is sensitive to the chemical composition and to the physical properties (*e.g.,* viscosity, pH) of the sample. The analytical procedure includes a check for matrix effects (Section 11.4).

5.0 Safety

5.1 Disclaimer. This method may involve hazardous materials, operations, and equipment. This test method may not address all of the safety problems associated with its use. It is the responsibility of the user to establish appropriate safety and health practices and determine the applicability of regulatory limitations prior to performing this test method.

5.2 Corrosive Reagents. The following reagents are hazardous. Personal protective equipment and safe procedures that prevent chemical splashes are recommended. If contact occurs, immediately flush with copious amounts of water for at least 15 minutes. Remove clothing under shower and decontaminate. Treat residual chemical burns as thermal burns.

5.2.1 Hydrochloric acid (HCl). Highly corrosive liquid with toxic vapors. Vapors are highly irritating to eyes, skin, nose, and lungs, causing severe damage. May cause bronchitis, pneumonia, or edema of lungs. Exposure to concentrations of 0.13 to 0.2 percent can be lethal to humans in a few minutes. Provide ventilation to limit exposure. Reacts with metals, producing hydrogen gas.

5.2.2 Hydrofluoric Acid (HF). Highly corrosive to eyes, skin, nose, throat, and lungs. Reaction to exposure may be delayed by 24 hours or more. Provide ventilation to limit exposure.

5.2.3 Nitric Acid (HNO_3). Highly corrosive to eyes, skin, nose, and lungs. Vapors are highly toxic and can cause bronchitis, pneumonia, or edema of lungs. Reaction to inhalation may be delayed as long as 30 hours and still be fatal. Provide ventilation to limit exposure. Strong oxidizer. Hazardous reaction may occur with organic materials such as solvents.

5.2.4 Perchloric Acid ($HClO_4$). Corrosive to eyes, skin, nose, and throat. Provide ventilation to limit exposure. Very strong oxidizer. Keep separate from water and oxidizable materials to prevent vigorous evolution of heat, spontaneous combustion, or explosion. Heat solutions containing $HClO_4$only in hoods specifically designed for $HClO_4$.

6.0 Equipment and Supplies

6.1 Sample Preparation. The following items are required for sample preparation:

6.1.1 Teflon Beakers. 150-ml.

6.1.2 Graduated Pipets. 5-ml disposable.

6.1.3 Graduated Cylinder. 50-ml.

6.1.4 Volumetric Flask. 100-ml.

6.1.5 Analytical Balance. To measure within 0.1 mg.

6.1.6 Hot Plate.

6.1.7 Perchloric Acid Fume Hood.

6.2 Analysis. The following items are required for analysis:

6.2.1 Spectrophotometer. Equipped with an electrodeless discharge lamp and a background corrector to measure absorbance at 193.7 nm.

6.2.2 Beaker and Watch Glass. 400-ml.

6.2.3 Volumetric Flask. 1-liter.

6.2.4 Volumetric Pipets. 1-, 5-, 10-, and 25-ml.

7.0 Reagents and Standards

Unless otherwise indicated, it is intended that all reagents conform to the specifications established by the Committee on Analytical Reagents of the American Chemical Society, where such specifications are available; otherwise, use the best available grade.

7.1 Sample Preparation. The following reagents are required for sample preparation:

7.1.1 Water. Deionized distilled to meet ASTM D 1193–77 or 91 Type 3 (incorporated by reference—see §61.18).

7.1.2 Nitric Acid, Concentrated.

7.1.3 Hydrofluoric Acid, Concentrated.

7.1.4 Perchloric Acid, 70 Percent.

7.1.5 Hydrochloric Acid, Concentrated.

7.2 Analysis. The following reagents and standards are required for analysis:

7.2.1 Water. Same as in Section 7.1.1.

7.2.2 Stock Arsenic Standard, 1.0 mg As/ml. Dissolve 1.3203 g of primary grade As_20_3[dried at 105 °C (221 °F)] in a 400-ml beaker with 10 ml of $HNO_3$and 5 ml of HCl. Cover with a watch glass, and heat gently until dissolution is complete. Add 10 ml of $HNO_3$and 25 ml of $HClO_4$, evaporate to strong fumes of $HClO_4$, and reduce to about 20 ml volume. Cool, add 100 ml of water and 100 ml of HCl, and transfer quantitatively to a 1-liter volumetric flask. Dilute to volume with water and mix.

7.2.3 Acetylene. Suitable quality for AAS analysis.

7.2.4 Air. Suitable quality for AAS analysis.

7.2.5 Quality Assurance Audit Samples. Same as in Method 108A, Section 7.2.11.

8.0 Sample Collection, Preservation, Transport, and Storage

Same as in Method 108A, Sections 8.1 and 8.2.

9.0 Quality Control

Section	Quality control measure	Effect
10.2	Spectrophotometer calibration	Ensure linearity of spectrophotometer response to standards.
11.4	Check for matrix effects	Eliminate matrix effects.
11.5	Audit sample analysis	Evaluate analyst's technique and standards preparation.

10.0 Calibration and Standardization

Note: Maintain a laboratory log of all calibrations.

10.1 Preparation of Standard Solutions. Pipet 1, 5, 10, and 25 ml of the stock As solution into separate 100-ml volumetric flasks. Add 2 ml of $HClO_4$, 10 ml of HCl, and dilute to the mark with water. This will provide standard concentrations of 10, 50, 100, and 250 µg As/ml.

10.2 Calibration Curve and Spectrophotometer Calibration Quality Control. Same as Method 108A, Sections 10.2 and 10.3

11.0 Analytical Procedure

11.1 Sample Preparation. Weigh 100 to 1000 mg of finely pulverized sample to the nearest 0.1 mg. Transfer the sample to a 150-ml Teflon beaker. Dissolve the sample by adding 15 ml of HNO_3, 10 ml of HCl, 10 ml of HF, and 10 ml of $HClO_4$in the exact order as described, and let stand for 10 minutes. In a $HClO_4$fume hood, heat on a hot plate until 2–3 ml of $HClO_4$remain, then cool. Add 20 ml of water and 10 ml of HCl. Cover and warm until the soluble salts are in solution. Cool, and transfer quantitatively to a 100-ml volumetric flask. Dilute to the mark with water.

11.2 Spectrophotometer Preparation. Same as in Method 108A, Section 11.2.

11.3 Arsenic Determination. If the sample concentration falls outside the range of the calibration curve, make an appropriate dilution with 2 percent $HClO_4$/10 percent HCl (prepared by diluting 2 ml concentrated $HClO_4$and 10 ml concentrated HCl to 100 ml with water) so that the final concentration falls within the range of the curve. Using the calibration curve, determine the As concentration in each sample.

Note: Because instruments vary between manufacturers, no detailed operating instructions will be given here. Instead, the instrument manufacturer's detailed operating instructions should be followed.

Run a blank and standard at least after every five samples to check the spectrophotometer calibration. The peak height of the blank must pass through a point no further from the origin than ±2 percent of the recorder full scale. The difference between the measured concentration of the standard (the product of the corrected average peak height and the reciprocal of the least squares slope) and the actual concentration of the standard must be less than 7 percent, or recalibration of the analyzer is required.

11.4 Mandatory Check for Matrix Effects on the Arsenic Results. Same as Method 12, Section 11.5.

11.5 Audit Sample Analysis. Same as in Method 108A, Section 11.6.

12.0 Data Analysis and Calculations

Same as in Method 108A, Section 12.0.

13.0 Method Performance

13.1 Sensitivity. The lower limit of flame AAS is 10 µg As/ml.

14.0 Pollution Prevention[Reserved]

15.0 Waste Management[Reserved]

16.0 References

Same as in Method 108A, Section 16.0.

17.0 Tables, Diagrams, Flowcharts, and Validation Data[Reserved]

Method 108C—Determination of Arsenic Content in Ore Samples From Nonferrous Smelters (Molybdenum Blue Photometric Procedure)

Note: This method does not include all of the specifications (*e.g.,* equipment and supplies) and procedures (*e.g.,* sampling and analytical) essential to its performance. Some material is incorporated by reference from other methods in this part. Therefore, to obtain reliable results, persons using this method should have a thorough knowledge of at least Method 108A.

1.0 Scope and Application

1.1 Analytes.

Analyte	CAS No.	Sensitivity
Arsenic compounds as arsenic (As)	7440–38–2	Lower limit 0.0002 percent As by weight.

1.2 Applicability. This method applies to the determination of inorganic As content of process ore and reverberatory matte samples from nonferrous smelters and other sources as specified in an applicable subpart of the regulations.

1.3 Data Quality Objectives. Adherence to the requirements of this method will enhance the quality of the data obtained from air pollutant sampling methods.

2.0 Summary of Method

Arsenic bound in ore samples is liberated by acid digestion and analyzed by the molybdenum blue photometric procedure.

3.0 Definitions.[Reserved]

4.0 Interferences.[Reserved]

5.0 Safety

5.1 Disclaimer. This method may involve hazardous materials, operations, and equipment. This test method may not address all of the safety problems associated with its use. It is the responsibility of the user to establish appropriate safety and health practices and determine the applicability of regulatory limitations prior to performing this test method.

5.2 Corrosive Reagents. The following reagents are hazardous. Personal protective equipment and safe procedures that prevent chemical splashes are recommended. If contact occurs, immediately flush with copious amounts of water for at least 15 minutes. Remove clothing under shower and decontaminate. Treat residual chemical burns as thermal burns.

5.2.1 Hydrochloric Acid (HCl). Highly corrosive liquid with toxic vapors. Vapors are highly irritating to eyes, skin, nose, and lungs, causing severe damage. May cause bronchitis, pneumonia, or edema of lungs. Exposure to concentrations of 0.13 to 0.2 percent can be lethal to humans in a few minutes. Provide ventilation to limit exposure. Reacts with metals, producing hydrogen gas.

5.2.2 Hydrofluoric Acid (HF). Highly corrosive to eyes, skin, nose, throat, and lungs. Reaction to exposure may be delayed by 24 hours or more. Provide ventilation to limit exposure.

5.2.3 Nitric Acid (HNO_4). Highly corrosive to eyes, skin, nose, and lungs. Vapors are highly toxic and can cause bronchitis, pneumonia, or edema of lungs. Reaction to inhalation may be delayed as long as 30 hours and still be fatal. Provide ventilation to limit exposure. Strong oxidizer. Hazardous reaction may occur with organic materials such as solvents.

5.2.4 Perchloric Acid ($HClO_4$). Corrosive to eyes, skin, nose, and throat. Provide ventilation to limit exposure. Very strong oxidizer. Keep separate from water and oxidizable materials to prevent vigorous evolution of heat, spontaneous combustion, or explosion. Heat solutions containing $HClO_4$only in hoods specifically designed for $HClO_4$.

5.2.5 Sulfuric acid (H_2SO_4). Rapidly destructive to body tissue. Will cause third degree burns. Eye damage may result in blindness. Inhalation may be fatal from spasm of the larynx, usually within 30 minutes. May cause lung tissue damage with edema. 3 mg/m^3 will cause lung damage in uninitiated. 1 mg/m^3 for 8 hours

will cause lung damage or, in higher concentrations, death. Provide ventilation to limit inhalation. Reacts violently with metals and organics.

6.0 Equipment and Supplies

6.1 Sample Preparation. The following items are required for sample preparation:

6.1.1 Analytical Balance. To measure to within 0.1 mg.

6.1.2 Erlenmeyer Flask. 300-ml.

6.1.3 Hot Plate.

6.1.4 Distillation Apparatus. No. 6, in ASTM E 50–82, 86, or 90 (Reapproved 1995)(incorporated by reference—see §61.18); detailed in Figure 108C–1.

6.1.5 Graduated Cylinder. 50-ml.

6.1.6 Perchloric Acid Fume Hood.

6.2 Analysis. The following items are required for analysis:

6.2.1 Spectrophotometer. Capable of measuring at 660 nm.

6.2.2 Volumetric Flasks. 50- and 100-ml.

7.0 Reagents and Standards

Unless otherwise indicated, it is intended that all reagents conform to the specifications established by the Committee on Analytical Reagents of the American Chemical Society, where such specifications are available; otherwise, use the best available grade.

7.1 Sample Preparation. The following reagents are required for sample preparation:

7.1.1 Water. Deionized distilled to meet ASTM D 1193–77 or 91 Type 3 (incorporated by reference—see §61.18). When high concentrations of organic matter are not expected to be present, the $KMnO_4$test for oxidizable organic matter may be omitted. Use in all dilutions requiring water.

7.1.2 Nitric Acid, Concentrated.

7.1.3 Hydrofluoric Acid, Concentrated.

7.1.4 Sulfuric Acid, Concentrated.

7.1.5 Perchloric Acid, 70 Percent.

7.1.6 Hydrochloric Acid, Concentrated.

7.1.7 Dilute Hydrochloric Acid. Add one part concentrated HCl to nine parts water.

7.1.8 Hydrazine Sulfate ($(NH_2)_2 \cdot H_2SO_4$).

7.1.9 Potassium Bromide (KBr).

7.1.10 Bromine Water, Saturated.

7.2 Analysis. The following reagents and standards are required for analysis:

7.2.1 Water. Same as in Section 7.1.1.

7.2.2 Methyl Orange Solution, 1 g/liter.

7.2.3 Ammonium Molybdate Solution, 5 g/liter. Dissolve 0.5 g $(NH_4)Mo_7O_{24}\cdot 4H_2O$ in water in a 100-ml volumetric flask, and dilute to the mark. This solution must be freshly prepared.

7.2.4 Standard Arsenic Solution, 10 µg As/ml. Dissolve 0.13203 g of As_2O_3in 100 ml HCl in a 1-liter volumetric flask. Add 200 ml of water, cool, dilute to the mark with water, and mix. Transfer 100 ml of this solution to a 1-liter volumetric flask, add 40 ml HCl, cool, dilute to the mark, and mix.

7.2.5 Hydrazine Sulfate Solution, 1 g/liter. Dissolve 0.1 g of $[(NH_2)_2\cdot H_2SO_4]$ in water, and dilute to 100 ml in a volumetric flask. This solution must be freshly prepared.

7.2.6 Potassium Bromate ($KBrO_3$) Solution, 0.03 Percent Weight by Volume (W/V). Dissolve 0.3 g $KBrO_3$in water, and dilute to 1 liter with water.

7.2.7 Ammonium Hydroxide (NH_4OH), Concentrated.

7.2.8 Boiling Granules.

7.2.9 Hydrochloric Acid, 50 percent by volume. Dilute equal parts concentrated HCl with water.

7.2.10 Quality Assurance Audit Samples. Same as in Method 108A, Section 7.2.11.

8.0 Sample Collection, Preservation, Transport, and Storage

Same as in Method 108A, Sections 8.1 and 8.2.

9.0 Quality Control

Section	Quality control measure	Effect
10.2	Calibration curve preparation	Ensure linearity of spectrophotometric analysis of standards.
11.3	Audit sample analysis	Evaluate analyst's technique and standards preparation.

10.0 Calibration and Standardizations

Note: Maintain a laboratory log of all calibrations.

10.1 Preparation of Standard Solutions. Transfer 1.0, 2.0, 4.0, 8.0, 12.0, 16.0, and 20.0 ml of standard arsenic solution (10 µg/ml) to each of seven 50-ml volumetric flasks. Dilute to 20 ml with dilute HCl. Add one drop of methyl orange solution and neutralize to the yellow color with dropwise addition of NH_4OH. Just bring back to the red color by dropwise addition of dilute HCl, and add 10 ml in excess. Proceed with the color development as described in Section 11.2.

10.2 Calibration Curve. Plot the spectrophotometric readings of the calibration solutions against µg As per 50 ml of solution. Use this curve to determine the As concentration of each sample.

10.3 Spectrophotometer Calibration Quality Control. Calculate the least squares slope of the calibration curve. The line must pass through the origin or through a point no further from the origin than ±2 percent of the recorder full scale. Multiply the corrected peak height by the reciprocal of the least squares slope to determine the distance each calibration point lies from the theoretical calibration line. The difference between the calculated concentration values and the actual concentrations must be less than 7 percent for all standards.

11.0 Analytical Procedure

11.1 Sample Preparation.

11.1.1 Weigh 1.0 g of finely pulverized sample to the nearest 0.1 mg. Transfer the sample to a 300 ml Erlenmeyer flask and add 15 ml of HNO_3, 4 ml HCl, 2 ml HF, 3 ml $HClO_4$, and 15 ml H_2SO_4, in the order listed. In a $HClO_4$fume hood, heat on a hot plate to decompose the sample. Then heat while swirling over an open flame until dense white fumes evolve. Cool, add 15 ml of water, swirl to hydrate the H_2SO_4completely, and add several boiling granules. Cool to room temperature.

11.1.2 Add 1 g of KBr, 1 g hydrazine sulfate, and 50 ml HCl. Immediately attach the distillation head with thermometer and dip the side arm into a 50-ml graduated cylinder containing 25 ml of water and 2 ml of bromine water. Keep the graduated cylinder immersed in a beaker of cold water during distillation. Distill until the temperature of the vapor in the flask reaches 107 °C (225 °F). When distillation is complete, remove the flask from the hot plate, and simultaneously wash down the side arm with water as it is removed from the cylinder.

11.1.3 If the expected arsenic content is in the range of 0.0020 to 0.10 percent, dilute the distillate to the 50-ml mark of the cylinder with water, stopper, and mix. Transfer a 5.0-ml aliquot to a 50-ml volumetric flask. Add 10 ml of water and a boiling granule. Place the flask on a hot plate, and heat gently until the bromine is expelled and the color of methyl orange indicator persists upon the addition of 1 to 2 drops. Cool the flask to room temperature. Neutralize just to the yellow color of the indicator with dropwise additions of NH_4OH. Bring back to the red color by dropwise addition of dilute HCl, and add 10 ml excess. Proceed with the molybdenum blue color development as described in Section 11.2.

11.1.4 If the expected arsenic content is in the range of 0.0002 to 0.0010 percent As, transfer either the entire initial distillate or the measured remaining distillate from Section 11.1.2 to a 250-ml beaker. Wash the cylinder with two successive portions of concentrated HNO_3, adding each portion to the distillate in the beaker. Add 4 ml of concentrated $HClO_4$, a boiling granule, and cover with a flat watch glass placed slightly to one side. Boil gently on a hot plate until the volume is reduced to approximately 10 ml. Add 3 ml of HNO_3, and continue the evaporation until $HClO_4$is refluxing on the beaker cover. Cool briefly, rinse the underside of the watch glass and the inside of the beaker with about 3–5 ml of water, cover, and continue the evaporation to expel all but 2 ml of the $HClO_4$.

Note: If the solution appears cloudy due to a small amount of antimony distilling over, add 4 ml of 50 percent HCl and 5 ml of water, cover, and warm gently until clear. If cloudiness persists, add 5 ml of $HNO_3$and 2 ml H_2SO_4. Continue the evaporation of volatile acids to solubilize the antimony until dense white fumes of H_2SO_4appear. Retain at least 1 ml of the H_2SO_4.

11.1.5 To the 2 ml of $HClO_4$solution or 1 ml of H_2SO_4solution, add 15 ml of water, boil gently for 2 minutes, and then cool. Proceed with the molybdenum blue color development by neutralizing the solution directly in the beaker just to the yellow indicator color by dropwise addition of NH_4OH. Obtain the red color by dropwise addition of dilute HCl. Transfer the solution to a 50-ml volumetric flask. Rinse the beaker successively with 10 ml of dilute HCl, followed by several small portions of water. At this point the volume of solution in the flask should be no more than 40 ml. Continue with the color development as described in Section 11.2.

11.2 Analysis.

11.2.1 Add 1 ml of $KBrO_3$solution to the flask and heat on a low-temperature hot plate to about 50 °C (122 °F) to oxidize the arsenic and methyl orange. Add 5.0 ml of ammonium molybdate solution to the warm solution and mix. Add 2.0 ml of hydrazine sulfate solution, dilute until the solution comes within the neck of

the flask, and mix. Place the flask in a 400 ml beaker, 80 percent full of boiling water, for 10 minutes. Enough heat must be supplied to prevent the water bath from cooling much below the boiling point upon inserting the volumetric flask. Remove the flask, cool to room temperature, dilute to the mark, and mix.

11.2.2 Transfer a suitable portion of the reference solution to an absorption cell, and adjust the spectrophotometer to the initial setting using a light band centered at 660 nm. While maintaining this spectrophotometer adjustment, take the readings of the calibration solutions followed by the samples.

11.3 Audit Sample Analysis. Same as in Method 108A, Section 11.6.

12.0 Data Analysis and Calculations

Same as in Method 108A, Section 12.0.

13.0 Method Performance.[Reserved]

14.0 Pollution Prevention.[Reserved]

15.0 Waste Management.[Reserved]

16.0 References

1. Ringwald, D. Arsenic Determination on Process Materials from ASARCO's Copper Smelter in Tacoma, Washington. Unpublished Report. Prepared for the Emission Measurement Branch, Technical Support Division, U.S. Environmental Protection Agency, Research Triangle Park, North Carolina. August 1980. 35 pp.

17.0 Tables, Diagrams, Flowcharts, and Validation

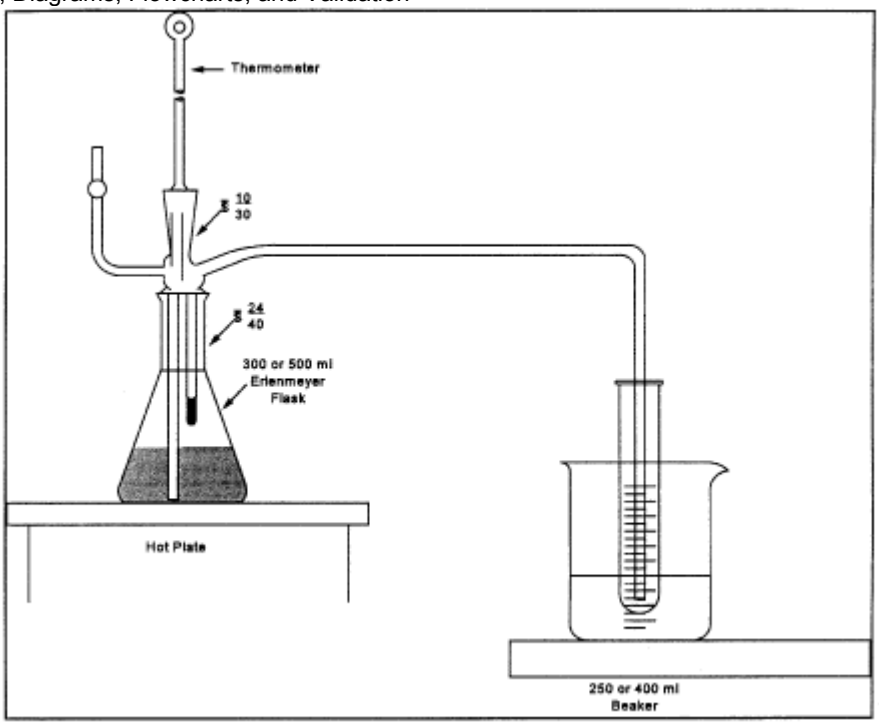

Figure 108C-1. Distillation Apparatus.

Data

View or download PDF

Method 111—Determination of Polonium–210 Emissions From Stationary Sources

Note: This method does not include all of the specifications (*e.g.,* equipment and supplies) and procedures (*e.g.,* sampling and analytical) essential to its performance. Some material is incorporated by reference from methods in appendix A to 40 CFR part 60. Therefore, to obtain reliable results, persons using this method should have a thorough knowledge of at least the following additional test methods: Method 1, Method 2, Method 3, and Method 5.

1.0 Scope and Application

1.1 Analytes.

Analyte	CAS No.	Sensitivity
Polonium	7440–08–6	Not specified.

1.2 Applicability. This method is applicable for the determination of the polonium-210 content of particulate matter samples collected from stationary source exhaust stacks, and for the use of these data to calculate polonium-210 emissions from individual sources and from all affected sources at a facility.

1.3 Data Quality Objectives. Adherence to the requirements of this method will enhance the quality of the data obtained from air pollutant sampling methods.

2.0 Summary of Method

A particulate matter sample, collected according to Method 5, is analyzed for polonium-210 content: the polonium-210 in the sample is put in solution, deposited on a metal disc, and the radioactive disintegration rate measured. Polonium in acid solution spontaneously deposits on surfaces of metals that are more electropositive than polonium. This principle is routinely used in the radiochemical analysis of polonium-210. Data reduction procedures are provided, allowing the calculation of polonium-210 emissions from individual sources and from all affected sources at a facility, using data obtained from Methods 2 and 5 and from the analytical procedures herein.

3.0 Definitions[Reserved]

4.0 Interferences[Reserved]

5.0 Safety

5.1 Disclaimer. This method may involve hazardous materials, operations, and equipment. This test method may not address all of the safety problems associated with its use. It is the responsibility of the user of this test method to establish appropriate safety and health practices and determine the applicability of regulatory limitations prior to performing this test method.

5.2 Corrosive Reagents. The following reagents are hazardous. Personal protective equipment and safe procedures are useful in preventing chemical splashes. If contact occurs, immediately flush with copious amounts of water at least 15 minutes. Remove clothing under shower and decontaminate. Treat residual chemical burns as thermal burns.

5.2.1 Hydrochloric Acid (HCl). Highly corrosive liquid with toxic vapors. Vapors are highly irritating to eyes, skin, nose, and lungs, causing severe damage. May cause bronchitis, pneumonia, or edema of lungs. Exposure to concentrations of 0.13 to 0.2 percent can be lethal to humans in a few minutes. Provide ventilation to limit exposure. Reacts with metals, producing hydrogen gas.

5.2.2 Hydrofluoric Acid (HF). Highly corrosive to eyes, skin, nose, throat, and lungs. Reaction to exposure may be delayed by 24 hours or more. Provide ventilation to limit exposure.

5.2.3 Nitric Acid (HNO_3). Highly corrosive to eyes, skin, nose, and lungs. Vapors cause bronchitis, pneumonia, or edema of lungs. Reaction to inhalation may be delayed as long as 30 hours and still be fatal. Provide ventilation to limit exposure. Strong oxidizer. Hazardous reaction may occur with organic materials such as solvents.

5.2.4 Perchloric Acid ($HClO_4$). Corrosive to eyes, skin, nose, and throat. Provide ventilation to limit exposure. Keep separate from water and oxidizable materials to prevent vigorous evolution of heat, spontaneous combustion, or explosion. Heat solutions containing $HClO_4$only in hoods specifically designed for $HClO_4$.

6.0 Equipment and Supplies

6.1 Alpha Spectrometry System. Consisting of a multichannel analyzer, biasing electronics, silicon surface barrier detector, vacuum pump and chamber.

6.2 Constant Temperature Bath at 85 °C (185 °F).

6.3 Polished Silver Discs. 3.8 cm diameter, 0.4 mm thick with a small hole near the edge.

6.4 Glass Beakers. 400 ml, 150 ml.

6.5 Hot Plate, Electric.

6.6 Fume Hood.

6.7 Teflon Beakers, 150 ml.

6.8 Magnetic Stirrer.

6.9 Stirring Bar.

6.10 Hooks. Plastic or glass, to suspend plating discs.

6.11 Internal Proportional Counter. For measuring alpha particles.

6.12 Nucleopore Filter Membranes. 25 mm diameter, 0.2 micrometer pore size or equivalent.

6.13 Planchets. Stainless steel, 32 mm diameter with 1.5 mm lip.

6.14 Transparent Plastic Tape. 2.5 cm wide with adhesive on both sides.

6.15 Epoxy Spray Enamel.

6.16 Suction Filter Apparatus. For 25 mm diameter filter.

6.17 Wash Bottles, 250 ml capacity.

6.18 Graduated Cylinder, plastic, 25 ml capacity.

6.19 Volumetric Flasks, 100 ml, 250 ml.

7.0 Reagents and Standards

Unless otherwise indicated, it is intended that all reagents conform to the specifications established by the Committee on Analytical Reagents of the American Chemical Society, where such specifications are available; otherwise, use the best available grade.

7.1 Ascorbic Acid.

7.2 Ammonium Hydroxide (NH_4OH), 15 M.

7.3 Water. Deionized distilled, to conform to ASTM D 1193–77 or 91 (incorporated by reference—see §61.18), Type 3. Use in all dilutions requiring water.

7.4 Ethanol (C_2H_5OH), 95 percent.

7.5 Hydrochloric Acid, 12 M.

7.6 Hydrochloric Acid, 1 M. Dilute 83 ml of the 12 M HCl to 1 liter with distilled water.

7.7 Hydrofluoric Acid, 29 M.

7.8 Hydrofluoric Acid, 3 M. Dilute 52 ml of the 29 M HF to 500 ml with distilled water. Use a plastic graduated cylinder and storage bottle.

7.9 Lanthanum Carrier, 0.1 mg La+3/ml. Dissolve 0.078 gram lanthanum nitrate, $La(NO_3)_3 \cdot 6H_2O$ in 250 ml of 1 M HCl.

7.10 Nitric Acid, 16 M.

7.11 Perchloric Acid, 12 M.

7.12 Polonium-209 Solution.

7.13 Silver Cleaner. Any mild abrasive commercial silver cleaner.

7.14 Degreaser.

7.15 Standard Solution. Standardized solution of an alpha-emitting actinide element, such as plutonium-239 or americium-241.

8.0 Sample Collection, Preservation, Transport, and Storage.[Reserved]

9.0 Quality Control

9.1 General Requirement.

9.1.1 All analysts using this method are required to demonstrate their ability to use the method and to define their respective accuracy and precision criteria.

9.2 Miscellaneous Quality Control Measures.

Section	Quality control measure	Effect

10.1	Standardization of alpha spectrometry system	Ensure precision of sample analyses.
10.3	Standardization of internal proportional counter	Ensure precise sizing of sample aliquot.
11.1, 11.2	Determination of procedure background and instrument background	Minimize background effects.
11.3	Audit sample analysis	Evaluate analyst's technique.

10.0 Calibration and Standardization

10.1 Standardization of Alpha Spectrometry System.

10.1.1 Add a quantity of the actinide standard solution to a 100 ml volumetric flask so that the final concentration when diluted to a volume of 100 ml will be approximately 1_pCi/ml.

10.1.2 Add 10 ml of 16 M $HNO_3$and dilute to 100 ml with water.

10.1.3 Add 20 ml of 1 M HCl to each of six 150 ml beakers. Add 1.0 ml of lanthanum carrier, 0.1 mg lanthanum per ml, to the acid solution in each beaker.

10.1.4 Add 1.0 ml of the 1 pCi/ml working solution (from Section 10.1.1) to each beaker. Add 5.0 ml of 3 M HF to each beaker.

10.1.5 Cover beakers and allow solutions to stand for a minimum of 30 minutes. Filter the contents of each beaker through a separate filter membrane using the suction filter apparatus. After each filtration, wash the filter membrane with 10 ml of distilled water and 5 ml of ethanol, and allow the filter membrane to air dry on the filter apparatus.

10.1.6 Carefully remove the filter membrane and mount it, filtration side up, with double-side tape on the inner surface of a planchet. Place planchet in an alpha spectrometry system and count each planchet for 1000 minutes.

10.1.7 Calculate the counting efficiency of the detector for each aliquot of the 1 pCi/ml actinide working solution using Eq. 111–1 in Section 12.2.

10.1.8 Determine the average counting efficiency of the detector, E_c, by calculating the average of the six determinations.

10.2 Preparation of Standardized Solution of Polonium-209.

10.2.1 Add a quantity of the Po-209 solution to a 100 ml volumetric flask so that the final concentration when diluted to a 100 ml volume will be approximately 1 pCi/ml.

10.2.2 Follow the procedures outlined in Sections 10.1.2 through 10.1.6, except substitute 1.0 ml of polonium-209 tracer solution (Section 10.2.1) and 3.0 ml of 15 M ammonium hydroxide for the 1 pCi/ml actinide working solution and the 3 M HF, respectively.

10.2.3 Calculate the activity of each aliquot of the polonium-209 tracer solution using Eq. 111–2 in Section 12.3.

10.2.4 Determine the average activity of the polonium-209 tracer solution, F, by averaging the results of the six determinations.

10.3 Standardization of Internal Proportional Counter

10.3.1 Add a quantity of the actinide standard solution to a 100 ml volumetric flask so that the final concentration when diluted to a 100 ml volume will be approximately 100 pCi/ml.

10.3.2 Follow the procedures outlined in Sections 10.1.2 through 10.1.6, except substitute the 100 pCi/ml actinide working solution for the 1 pCi/ml solution, place the planchet in an internal proportional counter (instead of an alpha spectrometry system), and count for 100 minutes (instead of 1000 minutes).

10.3.3 Calculate the counting efficiency of the internal proportional counter for each aliquot of the 100 pCi/ml actinide working solution using Eq. 111–3 in 12.4.

10.3.4 Determine the average counting efficiency of the internal proportional counter, E_I, by averaging the results of the six determinations.

11.0 Analytical Procedure

Note: Perform duplicate analyses of all samples, including background counts, quality assurance audit samples, and Method 5 samples. Duplicate measurements are considered acceptable when the difference between them is less than two standard deviations as described in EPA 600/4–77–001 or subsequent revisions.

11.1 Determination of Procedure Background. Background counts used in all equations are determined by performing the specific analysis required using the analytical reagents only. All procedure background counts and sample counts for the internal proportional counter should utilize a counting time of 100 minutes; for the alpha spectrometry system, 1000 minutes. These background counts should be performed no less frequently than once per 10 sample analyses.

11.2 Determination of Instrument Background. Instrument backgrounds of the internal proportional counter and the alpha spectrometry system should be determined on a weekly basis. Instrument background should not exceed procedure background. If this occurs, it may be due to a malfunction or contamination, and should be corrected before use.

11.3 Quality Assurance Audit Samples. An externally prepared performance evaluation sample shall be analyzed no less frequently than once per 10 sample analyses, and the results reported with the test results.

11.4 Sample Preparation. Treat the Method 5 samples [*i.e.,* the glass fiber filter (Container No. 1) and the acetone rinse (Container No. 2)] as follows:

11.4.1 Container No. 1. Transfer the filter and any loose particulate matter from the sample container to a 150-ml Teflon beaker.

11.4.2 Container No. 2. Note the level of liquid in the container, and confirm on the analysis sheet whether leakage occurred during transport. If a noticeable amount of leakage has occurred, either void the sample or use methods, subject to the approval of the Administrator, to correct the final results. Transfer the contents to a 400-ml glass beaker. Add polonium-209 tracer solution to the glass beaker in an amount approximately equal to the amount of polonium-210 expected in the total particulate sample. Record the activity of the tracer solution added. Add 16 M nitric acid to the beaker to digest and loosen the residue.

11.4.3 Transfer the contents of the glass beaker to the Teflon beaker containing the glass fiber filter. Rinse the glass beaker with 16 M HNO_3. If necessary, reduce the volume in the beaker by evaporation until all of the nitric acid $HNO_3$from the glass beaker has been transferred to the Teflon beaker.

11.4.4 Add 30 ml of 29 M HF to the Teflon beaker and evaporate to near dryness on a hot plate in a properly operating hood.

Note: Do not allow the residue to go to dryness and overheat; this will result in loss of polonium.

11.4.5 Repeat step 11.4.4 until the filter is dissolved.

11.4.6 Add 100 ml of 16 M $HNO_3$to the residue in the Teflon beaker and evaporate to near dryness.

Note: Do not allow the residue to go to dryness.

11.4.7 Add 50 ml of 16 M $HNO_3$and 10 ml of 12 M perchloric acid to the Teflon beaker and heat until dense fumes of perchloric acid are evolved.

11.4.8 Repeat steps 11.4.4 to 11.4.7 as necessary until sample is completely dissolved.

11.4.9 Add 10 ml of 12 M HCl to the Teflon beaker and evaporate to dryness. Repeat additions and evaporations several times.

11.4.10 Transfer the sample to a 250-ml volumetric flask and dilute to volume with 3 M HCl.

11.5 Sample Screening. To avoid contamination of the alpha spectrometry system, check each sample as follows:

11.5.1 Add 20 ml of 1 M HCl, 1 ml of the lanthanum carrier solution (0.1 mg La/ml), a 1 ml aliquot of the sample solution from Section 11.4.10, and 3 ml of 15 M ammonium hydroxide to a 250-ml beaker in the order listed. Allow this solution to stand for a minimum of 30 minutes.

11.5.2 Filter the solution through a filter membrane using the suction filter apparatus. Wash the filter membrane with 10 ml of water and 5 ml of ethanol, and allow the filter membrane to air dry on the filter apparatus.

11.5.3 Carefully remove the filter membrane and mount it, filtration side up, with double-side tape on the inner surface of a planchet. Place the planchet in an internal proportional counter, and count for 100 minutes.

11.5.4 Calculate the activity of the sample using Eq. 111–4 in Section 12.5.

11.5.5 Determine the aliquot volume of the sample solution from Section 11.4.10 to be analyzed for polonium-210, such that the aliquot contains an activity between 1 and 4 picocuries. Use Eq. 111–5 in Section 12.6.

11.6 Preparation of Silver Disc for Spontaneous Electrodeposition.

11.6.1 Clean both sides of the polished silver disc with silver cleaner and with degreaser.

11.6.2 Place disc on absorbent paper and spray one side with epoxy spray enamel. This should be carried out in a well-ventilated area, with the disc lying flat to keep paint on one side only. Allow paint to dry for 24 hours before using disc for deposition.

11.7 Sample Analysis.

11.7.1 Add the aliquot of sample solution from Section 11.4.10 to be analyzed for polonium-210, the volume of which was determined in Section 11.5.5, to a suitable 200-ml container to be placed in a constant temperature bath.

Note: Aliquot volume may require a larger container.

11.7.2 If necessary, bring the volume to 100 ml with 1 M HCl. If the aliquot volume exceeds 100 ml, use total aliquot.

11.7.3 Add 200 mg of ascorbic acid and heat solution to 85 °C (185 °F) in a constant temperature bath.

11.7.4 Suspend a silver disc in the heated solution using a glass or plastic rod with a hook inserted through the hole in the disc. The disc should be totally immersed in the solution, and the solution must be stirred constantly, at all times during the plating operation. Maintain the disc in solution for 3 hours.

11.7.5 Remove the silver disc, rinse with deionized distilled water, and allow to air dry at room temperature.

11.7.6 Place the disc, with deposition side (unpainted side) up, on a planchet and secure with double-side plastic tape. Place the planchet with disc in alpha spectrometry system and count for 1000 minutes.

12.0 Data Analysis and Calculations.

12.1 Nomenclature.

A = Picocuries of polonium-210 in the Method 5 sample (from Section 12.8).

A_A= Picocuries of actinide added.

A_L= Volume of sample aliquot used, in ml (specified in Section 11.5.1 as 1 ml).

A_S= Aliquot to be analyzed, in ml.

B_B= Procedure background counts measured in polonium-209 spectral region.

B_T= Polonium-209 tracer counts in sample.

C_T= Total counts in polonium-210 spectral region.

D = Decay correction for time “t” (in days) from sample collection to sample counting, given by: $D=e^{-0.005t}$

E_C= Average counting efficiency of detector (from Section 10.1.8), as counts per disintegration.

E_{Ci}= Counting efficiency of the detector for aliquot i of the actinide working solution, counts per disintegration.

E_I= Average counting efficiency of the internal proportional counter, as determined in Section 10.3.4, counts per disintegration.

E_{Ii}= Counting efficiency of the internal proportional counter for aliquot i of the 100 pCi/ml actinide working solution, counts per disintegration.

E_Y= The fraction of polonium-209 recovered on the planchet (from Section 12.7).

F= Average activity of polonium-209 in sample (from Section 10.2.4), in pCi.

F_i= activity of aliquot i of the polonium-209 tracer solution, in pCi.

L = Dilution factor (unitless). This is the volume of sample solution prepared (specified as 250 ml in Section 11.1.10) divided by the volume of the aliquot of sample solution analyzed for polonium-210 (from Section 11.7.1).

M_i= Phosphorous rock processing rate of the source being tested, during run i, Mg/hr.

M_k= Phosphate rock processed annually by source k, in Mg/yr.

n = Number of calciners at the elemental phosphorus plant.

P = Total activity of sample solution from Section 11.4.10, in pCi (see Eq. 111–4).

Q_{sd}= Volumetric flow rate of effluent stream, as determined by Method 2, in dscm/hr.

S = Annual polonium-210 emissions from the entire facility, in curies/yr.

Vm(std)= Volume of air sample, as determined by Method 5, in dscm.

X_k= Emission rate from source k, from Section 12.10, in curies/Mg.

10^{-12}= Curies per picocurie.

2.22 = Disintegrations per minute per picocurie.

250 = Volume of solution from Section 11.4.10, in ml.

12.2 Counting Efficiency. Calculate the counting efficiency of the detector for each aliquot of the 1 pCi/ml actinide working solution using Eq. 111–1.

$$E_{\alpha} = \frac{C_S - C_B}{2.22\, A_A T} \qquad Eq.\ 111\text{-}1$$

Where:

C_B= Background counts in same peak area as C_S.

C_S= Gross counts in actinide peak.

T = Counting time in minutes, specified in Section 10.1.6 as 1000 minutes.

12.3 Polonium-209 Tracer Solution Activity. Calculate the activity of each aliquot of the polonium-209 tracer solution using Eq. 111–2.

$$F_i = \frac{C_S - C_B}{2.22\, E_{\alpha i} T} \qquad Eq.\ 111\text{-}2$$

Where:

C_B= Background counts in the 4.88 MeV region of spectrum the in the counting time T.

C_S= Gross counts of polonium-209 in the 4.88 MeV region of the spectrum in the counting time T.

T = Counting time, specified in Section 10.1.6 as 1000 minutes.

12.4 Control Efficiency of Internal Proportional Counter. Calculate the counting efficiency of the internal proportional counter for each aliquot of the 100 pCi/ml actinide working solution using Eq. 111–3.

$$E_{Ri} = \frac{C_S - C_B}{2.22\ \mathrm{A}_A T} \qquad Eq.\ 111\text{-}3$$

Where:

C_B= Gross counts of procedure background.

C_S= Gross counts of standard.

T = Counting time in minutes, specified in Section 10.3.2 as 100 minutes.

12.5 Calculate the activity of the sample using Eq. 111–4.

$$P = \frac{250\ \left(C_S - C_B\right)}{2.22\ \overline{\mathrm{E}}_{\mathrm{I}} A_I T} \qquad Eq.\ 111\text{-}4$$

Where:

C_B= Total counts of procedure background. (See Section 11.1).

C_S= Total counts of screening sample.

T = Counting time for sample and background (which must be equal), in minutes (specified in Section 11.5.3 as 100 minutes).

12.6 Aliquot Volume. Determine the aliquot volume of the sample solution from Section 11.4.10 to be analyzed for polonium-210 , such that the aliquot contains an activity between 1 and 4 picocuries using Eq. 111–5.

$$A_s = \frac{250\ (\text{desired picocuries in aliquot})}{\mathrm{P}} \qquad Eq.\ 111\text{-}5$$

12.7 Polonium-209 Recovery. Calculate the fraction of polonium-209 recovered on the planchet, E_Y, using Eq. 111–6.

$$E_Y = \frac{B_T - B_B}{2.22\ \overline{\mathrm{F}}\ \overline{E_C}\ T} \qquad Eq.\ 111\text{-}6$$

Where:

T = Counting time, specified in Section 11.1 as 1000 minutes.

12.8 Polonium-210 Activity. Calculate the activity of polonium-210 in the Method 5 sample (including glass fiber filter and acetone rinse) using Eq. 111–7.

$$A = \frac{(C_T - C_B)\ \mathrm{L}}{2.22\ \mathrm{E_y}\ \overline{E_C}\ T\ D} \qquad Eq.\ 111\text{-}7$$

Where:

C_B= Procedure background counts in polonium-210 spectral region.

T = Counting time, specified in Section 11.1 as 1000 minutes for all alpha spectrometry sample and background counts.

12.9 Emission Rate from Each Stack.

12.9.1 For each test run, i, on a stack, calculate the measured polonium-210 emission rate, R_{Si}, using Eq. 111–8.

$$R_{Si} = \frac{\left(10^{-12}\right) A\, Q_{sd}}{V_{m(std)} M_i} \qquad Eq.\ 111\text{-}8$$

12.9.2 Determine the average polonium-210 emission rate from the stack, R_S, by taking the sum of the measured emission rates for all runs, and dividing by the number of runs performed.

12.9.3 Repeat steps 12.9.1 and 12.9.2 for each stack of each calciner.

12.10 Emission Rate from Each Source. Determine the total polonium-210 emission rate, X_k, from each source, k, by taking the sum of the average emission rates from all stacks to which the source exhausts.

12.11 Annual Polonium-210 Emission Rate from Entire Facility. Determine the annual elemental phosphorus plant emissions of polonium-210, S, using Eq. 111–9.

$$S = \frac{\sum_{k=1}^{n} \left(X_k M_k\right)}{n} \qquad Eq.\ 111\text{-}9$$

13.0 Method Performance.[Reserved]

14.0 Pollution Prevention.[Reserved]

15.0 Waste Management.[Reserved]

16.0 References

1. Blanchard, R.L. “Rapid Determination of Lead-210 and Polonium-210 in Environmental Samples by Deposition on Nickel.” Anal. Chem., *38* :189, pp. 189–192. February 1966.

17.0 Tables, Diagrams, Flowcharts, and Validation Data[Reserved]

Method 114—Test Methods for Measuring Radionuclide Emissions from Stationary Sources

1. *Purpose and Background*

This method provides the requirements for: (1) Stack monitoring and sample collection methods appropriate for radionuclides; (2) radiochemical methods which are used in determining the amounts of radionuclides collected by the stack sampling and; (3) quality assurance methods which are conducted in conjunction with these measurements. These methods are appropriate for emissions for stationary sources. A list of references is provided.

Many different types of facilities release radionuclides into air. These radionuclides differ in the chemical and physical forms, half-lives and type of radiation emitted. The appropriate combination of sample extraction, collection and analysis for an individual radionuclide is dependent upon many interrelated factors including the mixture of other radionuclides present. Because of this wide range of conditions, no single method for monitoring or sample collection and analysis of a radionuclide is applicable to all types of facilities. Therefore, a series of methods based on “principles of measurement” are described for monitoring and sample collection and analysis which are applicable to the measurement of radionuclides found in effluent streams at stationary sources. This approach provides the user with the flexibility to choose the most appropriate combination of monitoring and sample collection and analysis methods which are applicable to the effluent stream to be measured.

2. *Stack Monitoring and Sample Collection Methods*

Monitoring and sample collection methods are described based on “principles of monitoring and sample collection” which are applicable to the measurement of radionuclides from effluent streams at stationary sources. Radionuclides of most elements will be in the particulate form in these effluent streams and can be readily collected using a suitable filter media. Radionuclides of hydrogen, oxygen, carbon, nitrogen, the noble gases and in some circumstances iodine will be in the gaseous form. Radionuclides of these elements will require either the use of an in-line or off-line monitor to directly measure the radionuclides, or suitable sorbers, condensers or bubblers to collect the radionuclides.

2.1 Radionuclides as Particulates. The extracted effluent stream is passed through a filter media to remove the particulates. The filter must have a high efficiency for removal of sub-micron particles. The guidance in ANSI/HPS N13.1–1999 (section 6.6.2 Filter media) shall be followed in using filter media to collect particulates (incorporated by reference—see §61.18 of this part).

2.2 Radionuclides as Gases.

2.2.1 The Radionuclide Tritium (H–3). Tritium in the form of water vapor is collected from the extracted effluent sample by sorption, condensation or dissolution techniques. Appropriate collectors may include silica gel, molecular sieves, and ethylene glycol or water bubblers.

Tritium in the gaseous form may be measured directly in the sample stream using Method B–1, collected as a gas sample or may be oxidized using a metal catalyst to tritiated water and collected as described above.

2.2.2 Radionuclides of Iodine. Iodine is collected from an extracted sample by sorption or dissolution techniques. Appropriate collectors may include charcoal, impregnated charcoal, metal zeolite and caustic solutions.

2.2.3 Radionuclides of Argon, Krypton and Xenon. Radionuclides of these elements are either measured directly by an in-line or off-line monitor, or are collected from the extracted sample by low temperature sorption techniques, Appropriate sorbers may include charcoal or metal zeolite.

2.2.4 Radionuclides of Oxygen, Carbon, Nitrogen and Radon. Radionuclides of these elements are measured directly using an in-line or off-line monitor. Radionuclides of carbon in the form of carbon dioxide may be collected by dissolution in caustic solutions.

2.3 Definition of Terms

In-line monitor means a continuous measurement system in which the detector is placed directly in or adjacent to the effluent stream. This may involve either gross radioactivity measurements or specific

radionuclide measurements. Gross measurements shall be made in conformance with the conditions specified in Methods A–4, B–2 and G–4.

Off-line monitor means a measurement system in which the detector is used to continuously measure an extracted sample of the effluent stream. This may involve either gross radioactivity measurements or specific radionuclide measurements. Gross measurements shall be made in conformance with the conditions specified in Methods A–4, B–2 and G–4.

Sample collection means a procedure in which the radionuclides are removed from an extracted sample of the effluent using a collection media. These collection media include filters, absorbers, bubblers and condensers. The collected sample is analyzed using the methods described in Section 3.

3. *Radionuclide Analysis Methods*

A series of methods based on “principles of measurement” are described which are applicable to the analysis of radionuclides collected from airborne effluent streams at stationary sources. These methods are applicable only under the conditions stated and within the limitations described. Some methods specify that only a single radionuclide be present in the sample or the chemically separated sample. This condition should be interpreted to mean that no other radionuclides are present in quantities which would interfere with the measurement.

Also identified (Table 1) are methods for a selected list of radionuclides. The listed radionuclides are those which are most commonly used and which have the greatest potential for causing dose to members of the public. Use of methods based on principles of measurement other than those described in this section must be approved in advance of use by the Administrator. For radionuclides not listed in Table 1, any of the described methods may be used provided the user can demonstrate that the applicability conditions of the method have been met.

The type of method applicable to the analysis of a radionuclide is dependent upon the type of radiation emitted, i.e., alpha, beta or gamma. Therefore, the methods described below are grouped according to principles of measurements for the analysis of alpha, beta and gamma emitting radionuclides.

3.1 Methods for Alpha Emitting Radionuclides

3.1.1 Method A–1, Radiochemistry-Alpha Spectrometry.

Principle: The element of interest is separated from other elements, and from the sample matrix using radiochemical techniques. The procedure may involve precipitation, ion exchange, or solvent extraction. Carriers (elements chemically similar to the element of interest) may be used. The element is deposited on a planchet in a very thin film by electrodeposition or by coprecipitation on a very small amount of carrier, such as lanthanum fluoride. The deposited element is then counted with an alpha spectrometer. The activity of the nuclide of interest is measured by the number of alpha counts in the appropriate energy region. A correction for chemical yield and counting efficiency is made using a standardized radioactive nuclide (tracer) of the same element. If a radioactive tracer is not available for the element of interest, a predetermined chemical yield factor may be used.

Applicability: This method is applicable for determining the activity of any alpha-emitting radionuclide, regardless of what other radionuclides are present in the sample provided the chemical separation step produces a very thin sample and removes all other radionuclides which could interfere in the spectral region of interest. APHA–605(2), ASTM–D–3972(13).

3.1.2 Method A–2, Radiochemistry-Alpha Counting.

Principle: The element of interest is separated from other elements, and from the sample matrix using radiochemistry. The procedure may involve precipitation, ion exchange, or solvent extraction. Carriers (elements chemically similar to the element of interest) may be used. The element is deposited on a planchet in a thin film and counted with an alpha counter. A correction for chemical yield (if necessary) is

made. The alpha count rate measures the total activity of all emitting radionuclides of the separated element.

Applicability: This method is applicable for the measurement of any alpha-emitting radionuclide, provided no other alpha emitting radionuclide is present in the separated sample. It may also be applicable for determining compliance, when other radionuclides of the separated element are present, provided that the calculated emission rate is assigned to the radionuclide which could be present in the sample that has the highest dose conversion factor. IDO–12096(18).

3.1.3 Method A–3, Direct Alpha Spectrometry.

Principle: The sample, collected on a suitable filter, is counted directly on an alpha spectrometer. The sample must be thin enough and collected on the surface of the filter so that any absorption of alpha particle energy in the sample or the filter, which would degrade the spectrum, is minimal.

Applicability: This method is applicable to simple mixtures of alpha emitting radionuclides and only when the amount of particulates collected on the filter paper are relatively small and the alpha spectra is adequately resolved. Resolutions should be 50 keV (FWHM) or better, ASTM–D–3084(16).

3.1.4 Method A–4, Direct Alpha Counting (Gross alpha determination).

Principle: The sample, collected on a suitable filter, is counted with an alpha counter. The sample must be thin enough so that self-absorption is not significant and the filter must be of such a nature that the particles are retained on the surface.

Applicability: Gross alpha determinations may be used to measure emissions of specific radionuclides only (1) when it is known that the sample contains only a single radionuclide, or the identity and isotopic ratio of the radionuclides in the sample are well-known, and (2) measurements using either Method A–1, A–2 or A–5 have shown that this method provides a reasonably accurate measurement of the emission rate. Gross alpha measurements are applicable to unidentified mixtures of radionuclides only for the purposes and under the conditions described in section 3.7. APHA–601(3), ASTM–D–1943(10).

3.1.5 Method A–5, Chemical Determination of Uranium.

Principle: Uranium may be measured chemically by either colorimetry or fluorometry. In both procedures, the sample is dissolved, the uranium is oxidized to the hexavalent form and extracted into a suitable solvent. Impurities are removed from the solvent layer. For colorimetry, dibenzoylmethane is added, and the uranium is measured by the absorbance in a colorimeter. For fluorometry, a portion of the solution is fused with a sodium fluoride-lithium fluoride flux and the uranium is determined by the ultraviolet activated fluorescence of the fused disk in a fluorometer.

Applicability: This method is applicable to the measurements of emission rates of uranium when the isotopic ratio of the uranium radionuclides is well known. ASTM–E–318(15), ASTM–D–2907(14).

3.1.6 Method A–6, Radon-222—Continuous Gas Monitor.

Principle: Radon-222 is measured directly in a continuously extracted sample stream by passing the air stream through a calibrated scintillation cell. Prior to the scintillation cell, the air stream is treated to remove particulates and excess moisture. The alpha particles from radon-222 and its decay products strike a zinc sulfide coating on the inside of the scintillation cell producing light pulses. The light pulses are detected by a photomultiplier tube which generates electrical pulses. These pulses are processed by the system electronics and the read out is in pCi/l of radon-222.

Applicability: This method is applicable to the measurement of radon-222 in effluent streams which do not contain significant quantities of radon-220. Users of this method should calibrate the monitor in a radon calibration chamber at least twice per year. The background of the monitor should also be checked periodically by operating the instrument in a low radon environment. EPA 520/1–89–009(24).

3.1.7 Method A–7, Radon-222-Alpha Track Detectors

Principle: Radon-222 is measured directly in the effluent stream using alpha track detectors (ATD). The alpha particles emitted by radon-222 and its decay products strike a small plastic strip and produce submicron damage tracks. The plastic strip is placed in a caustic solution that accentuates the damage tracks which are counted using a microscope or automatic counting system. The number of tracks per unit area is correlated to the radon concentration in air using a conversion factor derived from data generated in a radon calibration facility.

Applicability: Prior approval from EPA is required for use of this method. This method is only applicable to effluent streams which do not contain significant quantities of radon-220, unless special detectors are used to discriminate against radon-220. This method may be used only when ATDs have been demonstrated to produce data comparable to data obtained with Method A–6. Such data should be submitted to EPA when requesting approval for the use of this method. EPA 520/1–89–009(24).

3.2 Methods for Gaseous Beta Emitting Radionuclides.

3.2.1 Method B–1, Direct Counting in Flow-Through Ionization Chambers.

Principle: An ionization chamber containing a specific volume of gas which flows at a given flow rate through the chamber is used. The sample (effluent stream sample) acts as the counting gas for the chamber. The activity of the radionuclide is determined from the current measured in the ionization chamber.

Applicability: This method is applicable for measuring the activity of a gaseous beta-emitting radionuclide in an effluent stream that is suitable as a counting gas, when no other beta-emitting nuclides are present. DOE/EP–0096(17), NCRP–58(23).

3.2.2 Method B–2, Direct Counting With In-line or Off-line Beta Detectors.

Principle: The beta detector is placed directly in the effluent stream (in-line) or an extracted sample of the effluent stream is passed through a chamber containing a beta detector (off-line). The activities of the radionuclides present in the effluent stream are determined from the beta count rate, and a knowledge of the radionuclides present and the relationship of the gross beta count rate and the specific radionuclide concentration.

Applicability: This method is applicable only to radionuclides with maximum beta particle energies greater then 0.2 MeV. This method may be used to measure emissions of specific radionuclides only when it is known that the sample contains only a single radionuclide or the identity and isotopic ratio of the radionuclides in the effluent stream are well known. Specific radionuclide analysis of periodic grab samples may be used to identify the types and quantities of radionuclides present and to establish the relationship between specific radionuclide analyses and gross beta count rates.

This method is applicable to unidentified mixtures of gaseous radionuclides only for the purposes and under the conditions described in section 3.7.

3.3 Methods for Non-Gaseous Beta Emitting Radionuclides.

3.3.1 Method B–3, Radiochemistry-Beta Counting.

Principle: The element of interest is separated from other elements, and from the sample matrix by radiochemistry. This may involve precipitation, distillation, ion exchange, or solvent extraction. Carriers (elements chemically similar to the element of interest) may be used. The element is deposited on a planchet, and counted with a beta counter. Corrections for chemical yield, and decay (if necessary) are made. The beta count rate determines the total activity of all radionuclides of the separated element. This method may also involve the radiochemical separation and counting of a daughter element, after a suitable period of ingrowth, in which case it is specific for the parent nuclide.

Applicability: This method is applicable for measuring the activity of any beta-emitting radionuclide, with a maximum energy greater than 0.2 MeV, provided no other radionuclide is present in the separated sample. APHA–608(5).

3.3.2 Method B–4, Direct Beta Counting (Gross beta determination).

Principle: The sample, collected on a suitable filter, is counted with a beta counter. The sample must be thin enough so that self-absorption corrections can be made.

Applicability: Gross beta measurements are applicable only to radionuclides with maximum beta particle energies greater than 0.2 MeV. Gross beta measurements may be used to measure emissions of specific radionuclides only (1) when it is known that the sample contains only a single radionuclide, and (2) measurements made using Method B–3 show reasonable agreement with the gross beta measurement. Gross beta measurements are applicable to mixtures of radionuclides only for the purposes and under the conditions described in section 3.7. APHA–602(4), ASTM–D–1890(11).

3.3.3 Method B–5, Liquid Scintillation Spectrometry.

Principle: An aliquot of a collected sample or the result of some other chemical separation or processing technique is added to a liquid scintillation “cocktail” which is viewed by photomultiplier tubes in a liquid scintillation spectrometer. The spectrometer is adjusted to establish a channel or “window” for the pulse energy appropriate to the nuclide of interest. The activity of the nuclide of interest is measured by the counting rate in the appropriate energy channel. Corrections are made for chemical yield where separations are made.

Applicability: This method is applicable to any beta-emitting nuclide when no other radionuclide is present in the sample or the separated sample provided that it can be incorporated in the scintillation cocktail. This method is also applicable for samples which contain more than one radionuclide but only when the energies of the beta particles are sufficiently separated so that they can be resolved by the spectrometer. This method is most applicable to the measurement of low-energy beta emitters such as tritium and carbon-14. APHA–609(6), EML–LV–539–17(19).

3.4 Gamma Emitting Radionuclides

3.4.1 Method G–1, High Resolution Gamma Spectrometry.

Principle: The sample is counted with a high resolution gamma detector, usually either a Ge(Li) or a high purity Ge detector, connected to a multichannel analyzer or computer. The gamma emitting radionuclides in the sample are measured from the gamma count rates in the energy regions characteristic of the individual radionuclide. Corrections are made for counts contributed by other radionuclides to the spectral regions of the radionuclides of interest. Radiochemical separations may be made prior to counting but are usually not necessary.

Applicability: This method is applicable to the measurement of any gamma emitting radionuclide with gamma energies greater than 20 keV. It can be applied to complex mixtures of radionuclides. The samples counted may be in the form of particulate filters, absorbers, liquids or gases. The method may also be applied to the analysis of gaseous gamma emitting radionuclides directly in an effluent stream by passing the stream through a chamber or cell containing the detector. ASTM–3649(9), IDO–12096(18).

3.4.2 Method G–2, Low Resolution Gamma Spectrometry.

Principle: The sample is counted with a low resolution gamma detector, a thallium activated sodium iodide crystal. The detector is coupled to a photomultiplier tube and connected to a multichannel analyzer. The gamma emitting radionuclides in the sample are measured from the gamma count rates in the energy regions characteristic of the individual radionuclides. Corrections are made for counts contributed by other radionuclides to the spectral regions of the radionuclides of interest. Radiochemical separation may be used prior to counting to obtain less complex gamma spectra if needed.

Applicability: This method is applicable to the measurement of gamma emitting radionuclides with energies greater than 100 keV. It can be applied only to relatively simple mixtures of gamma emitting radionuclides. The samples counted may be in the form of particulate filters, absorbers, liquids or gas. The method can be applied to the analysis of gaseous radionuclides directly in an effluent stream by passing the gas stream through a chamber or cell containing the detector. ASTM–D–2459(12), EMSL–LV–0539–17(19).

3.4.3 Method G–3, Single Channel Gamma Spectrometry.

Principle: The sample is counted with a thallium activated sodium iodide crystal. The detector is coupled to a photomultiplier tube connected to a single channel analyzer. The activity of a gamma emitting radionuclide is determined from the gamma counts in the energy range for which the counter is set.

Applicability: This method is applicable to the measurement of a single gamma emitting radionuclide. It is not applicable to mixtures of radionuclides. The samples counted may be in the form of particulate filters, absorbers, liquids or gas. The method can be applied to the analysis of gaseous radionuclides directly in an effluent stream by passing the gas stream through a chamber or cell containing the detector.

3.4.4 Method G–4, Gross Gamma Counting.

Principle: The sample is counted with a gamma detector usually a thallium activated sodium iodine crystal. The detector is coupled to a photomultiplier tube and gamma rays above a specific threshold energy level are counted.

Applicability: Gross gamma measurements may be used to measure emissions of specific radionuclides only when it is known that the sample contains a single radionuclide or the identity and isotopic ratio of the radionuclides in the effluent stream are well known. When gross gamma measurements are used to determine emissions of specific radionuclides periodic measurements using Methods G–1 or G–2 should be made to demonstrate that the gross gamma measurements provide reliable emission data. This method may be applied to analysis of gaseous radionuclides directly in an effluent stream by placing the detector directly in or adjacent to the effluent stream or passing an extracted sample of the effluent stream through a chamber or cell containing the detector.

3.5 Counting Methods. All of the above methods with the exception of Method A–5 involve counting the radiation emitted by the radionuclide. Counting methods applicable to the measurement of alpha, beta and gamma radiations are listed below. The equipment needed and the counting principles involved are described in detail in ASTM–3648(8).

3.5.1 Alpha Counting:

• *Gas Flow Proportional Counters.* The alpha particles cause ionization in the counting gas and the resulting electrical pulses are counted. These counters may be windowless or have very thin windows.

• *Scintillation Counters.* The alpha particles transfer energy to a scintillator resulting in a production of light photons which strike a photomultiplier tube converting the light photons to electrical pulses which are counted. The counters may involve the use of solid scintillation materials such as zinc sulfide or liquid scintillation solutions.

• *Solid-State Counters.* Semiconductor materials, such as silicon surface-barrier p-n junctions, act as solid ionization chambers. The alpha particles interact which the detector producing electron hole pairs. The charged pair is collected by an applied electrical field and the resulting electrical pulses are counted.

• *Alpha Spectrometers.* Semiconductor detectors used in conjunction with multichannel analyzers for energy discrimination.

3.5.2 Beta Counting:

• *Ionization Chambers.* These chambers contain the beta-emitting nuclide in gaseous form. The ionization current produced is measured.

• *Geiger-Muller (GM) Counters-or Gas Flow Proportional Counters.* The beta particles cause ionization in the counting gas and the resulting electrical pulses are counted. Proportional gas flow counters which are heavily shielded by lead or other metal, and provided with an anti-coincidence shield to reject cosmic rays, are called low background beta counters.

• *Scintillation Counters.* The beta particles transfer energy to a scintillator resulting in a production of light photons, which strike a photomultiplier tube converting the light photon to electrical pulses which are counted. This may involve the use of anthracene crystals, plastic scintillator, or liquid scintillation solutions with organic phosphors.

• *Liquid Scintillation Spectrometers.* Liquid scintillation counters which use two photomultiplier tubes in coincidence to reduce background counts. This counter may also electronically discriminate among pulses of a given range of energy.

3.5.3 Gamma Counting:

• *Low-Resolution Gamma Spectrometers.* The gamma rays interact with thallium activated sodium iodide or cesium iodide crystal resulting in the release of light photons which strike a photomultiplier tube converting the light pulses to electrical pulses proportional to the energy of the gamma ray. Multi-channel analyzers are used to separate and store the pulses according to the energy absorbed in the crystal.

• *High-Resolution gamma Spectrometers.* Gamma rays interact with a lithium-drifted (Ge(Li)) or high-purity germanium (HPGe) semiconductor detectors resulting in a production of electron-hole pairs. The charged pair is collected by an applied electrical field. A very stable low noise preamplifier amplifies the pulses of electrical charge resulting from the gamma photon interactions. Multichannel analyzers or computers are used to separate and store the pulses according to the energy absorbed in the crystal.

• *Single Channel Analyzers.* Thallium activated sodium iodide crystals used with a single window analyzer. Pulses from the photomultiplier tubes are separated in a single predetermined energy range.

3.5.4 Calibration of Counters. Counters are calibrated for specific radionuclide measurements using a standard of the radionuclide under either identical or very similar conditions as the sample to be counted. For gamma spectrometers a series of standards covering the energy range of interest may be used to construct a calibration curve relating gamma energy to counting efficiency.

In those cases where a standard is not available for a radionuclide, counters may be calibrated using a standard with energy characteristics as similar as possible to the radionuclide to be measured. For gross alpha and beta measurements of the unidentified mixtures of radionuclides, alpha counters are calibrated with a natural uranium standard and beta counters with a cesium-137 standard. The standard must contain the same weight and distribution of solids as the samples, and be mounted in an identical manner. If the samples contain variable amounts of solids, calibration curves relating weight of solids present to counting efficiency are prepared. Standards other than those prescribed may be used provided it can be shown that such standards are more applicable to the radionuclide mixture measured.

3.6 Radiochemical Methods for Selected Radionuclides. Methods for a selected list of radionuclides are listed in Table 1. The radionuclides listed are those which are most commonly used and which have the greatest potential for causing doses to members of the public. For radionuclides not listed in Table 1, methods based on any of the applicable “principles of measurement” described in section 3.1 through 3.4 may be used.

3.7 Applicability of Gross Alpha and Beta Measurements to Unidentified Mixtures of Radionuclides. Gross alpha and beta measurements may be used as a screening measurement as a part of an emission measurement program to identify the need to do specific radionuclide analyses or to confirm or verify that unexpected radionuclides are not being released in significant quantities.

Gross alpha (Method A–4) or gross beta (Methods B–2 or B–4) measurements may also be used for the purpose of comparing the measured concentrations in the effluent stream with the limiting "Concentration Levels for Environmental Compliance" in table 2 of appendix E. For unidentified mixtures, the measured concentration value shall be compared with the lowest environmental concentration limit for any radionuclide which is not known to be absent from the effluent stream.

Table 1—List of Approved Methods for Specific Radionuclides

Radionuclide	Approved methods of analysis
Am-241	A–1, A–2, A–3, A–4
Ar-41	B–1,B–2,G–1,G–2, G–3, G–4
Ba-140	G–1, G–2, G–3, G–4
Br-82	G–1, G–2, G–3, G–4
C-11	B–1,B–2,G–1,G–2,G–3, G–4
C-14	B–5
Ca-45	B–3, B–4, B–5
Ce-144	G–1, G–2, G–3, G–4
Cm-244	A–1, A–2, A–3, A–4
Co-60	G–1, G–2, G–3, G–4
Cr-51	G–1, G–2, G–3, G–4
Cs-134	G–1, G–2, G–3, G–4
Cs-137	G–1, G–2, G–3, G–4
Fe-55	B–5, G–1
Fe-59	G–1, G–2, G–3, G–4
Ga-67	G–1, G–2, G–3, G–4
H-3 (H_2O)	B–5
H-3 (gas)	B–1
I-123	G–1, G–2, G–3, G–4
I-125	G–1
I-131	G–1, G–2, G–3, G–4
In-113m	G–1, G–2, G–3, G–4
Ir-192	G–1, G–2, G–3, G–4
Kr-85	B–1, B–2, B–5, G–1, G–2, G–3, G–4
Kr-87	B–1, B–2, G–1, G–2, G–3, G–4
Kr-88	B–1, B–2, G–1, G–2, G–3, G–4
Mn-54	G–1, G–2, G–3, G–4
Mo-99	G–1, G–2, G–3, G–4

N-13	B–1, B–2, G–1, G–2, G–3, G–4
O-15	B–1, B–2, G–1, G–2, G–3, G–4
P-32	B–3, B–4, B–5
Pm-147	B–3, B–4, B–5
Po-210	A–1, A–2, A–3, A–4
Pu-238	A–1, A–2, A–3, A–4
Pu-239	A–1, A–2, A–3, A–4
Pu-240	A–1, A–2, A–3, A–4
Ra–226	A–1, A–2, G–1, G–2
S-35	B–5
Se-75	G–1, G–2, G–3, G–4
Sr-90	B–3, B–4, B–5
Tc-99	B–3, B–4, B–5
Te-201	G–1, G–2, G–3, G–4
Uranium (total alpha)	A–1, A–2, A–3, A–4
Uranium (Isotopic)	A–1, A–3
Uranium (Natural)	A–5
Xe-133	G–1
Yb-169	G–1, G–2, G–3, G–4
Zn-65	G–1, G–2, G–3, G–4

4. *Quality Assurance Methods*

Each facility required to measure their radionuclide emissions shall conduct a quality assurance program in conjunction with the radionuclide emission measurements. This program shall assure that the emission measurements are representative, and are of known precision and accuracy and shall include administrative controls to assure prompt response when emission measurements indicate unexpectedly large emissions. The program shall consist of a system of policies, organizational responsibilities, written procedures, data quality specifications, audits, corrective actions and reports. This quality assurance program shall include the following program elements:

4.1 The organizational structure, functional responsibilities, levels of authority and lines of communications for all activities related to the emissions measurement program shall be identified and documented.

4.2 Administrative controls shall be prescribed to ensure prompt response in the event that emission levels increase due to unplanned operations.

4.3 The sample collection and analysis procedures used in measuring the emissions shall be described including where applicable:

4.3.1 Identification of sampling sites and number of sampling points, including the rationale for site selections.

4.3.2 A description of sampling probes and representativeness of the samples.

4.3.3 A description of any continuous monitoring system used to measure emissions, including the sensitivity of the system, calibration procedures and frequency of calibration.

4.3.4 A description of the sample collection systems for each radionuclide measured, including frequency of collection, calibration procedures and frequency of calibration.

4.3.5 A description of the laboratory analysis procedures used for each radionuclide measured, including frequency of analysis, calibration procedures and frequency of calibration.

4.3.6 A description of the sample flow rate measurement systems or procedures, including calibration procedures and frequency of calibration.

4.3.7 A description of the effluent flow rate measurement procedures, including frequency of measurements, calibration procedures and frequency of calibration.

4.4 The objectives of the quality assurance program shall be documented and shall state the required precision, accuracy and completeness of the emission measurement data including a description of the procedures used to assess these parameters. Accuracy is the degree of agreement of a measurement with a true or known value. Precision is a measure of the agreement among individual measurements of the same parameters under similar conditions. Completeness is a measure of the amount of valid data obtained compared to the amount expected under normal conditions.

4.5 A quality control program shall be established to evaluate and track the quality of the emissions measurement data against preset criteria. The program should include where applicable a system of replicates, spiked samples, split samples, blanks and control charts. The number and frequency of such quality control checks shall be identified.

4.6 A sample tracking system shall be established to provide for positive identification of samples and data through all phases of the sample collection, analysis and reporting system. Sample handling and preservation procedures shall be established to maintain the integrity of samples during collection, storage and analysis.

4.7 Regular maintenance, calibration and field checks shall be performed for each sampling system in use by satisfying the requirements found in Table 2: Maintenance, Calibration and Field Check Requirements.

Table 2—Maintenance, Calibration and Field Check Requirements

Sampling system components	Frequency of activity
Cleaning of thermal anemometer elements	As required by application.
Inspect pitot tubes for contaminant deposits	At least annually.
Inspect pitot tube systems for leaks	At least annually.
Inspect sharp-edged nozzles for damage	At least annually or after maintenance that could cause damage.
Check nozzles for alignment, presence of deposits, or other potentially degrading factors	Annually.
Check transport lines of HEPA-filtered	Annually.

applications to determine if cleaning is required	
Clean transport lines	Visible deposits for HEPA-filtered applications. Mean mass of deposited material exceeds 1g/$m^2$for other applications.
Inspect or test the sample transport system for leaks	At least annually.
Check mass flow meters of sampling systems with a secondary or transfer standard	At least quarterly.
Inspect rotameters of sampling systems for presence of foreign matter	At the start of each sampling period.
Check response of stack flow rate systems	At least quarterly.
Calibration of flow meters of sampling systems	At least annually.
Calibration of effluent flow measurement devices	At least annually.
Calibration of timing devices	At least annually.

4.8 Periodic internal and external audits shall be performed to monitor compliance with the quality assurance program. These audits shall be performed in accordance with written procedures and conducted by personnel who do not have responsibility for performing any of the operations being audited.

4.9 A corrective action program shall be established including criteria for when corrective action is needed, what corrective actions will be taken and who is responsible for taking the corrective action.

4.10 Periodic reports to responsible management shall be prepared on the performance of the emissions measurements program. These reports should include assessment of the quality of the data, results of audits and description of corrective actions.

4.11 The quality assurance program should be documented in a quality assurance project plan that should address each of the above requirements.

5. *References*

(1) American National Standards Institute “Guide to Sampling Airborne Radioactive Materials in Nuclear Facilities”, ANSI–N13.1–1969, American National Standards Institute, New York, New York (1969).

(2) American Public Health Association, “Methods of Air Sampling”, 2nd Edition, Method 605, “Tentative Method of Analysis for Plutonium Content of Atmospheric Particulate Matter”. American Public Health Association, New York, NY (1977).

(3) Ibid, Method 601, “Tentative Method of Analysis for Gross Alpha Radioactivity Content of the Atmosphere”.

(4) Ibid, Method 602, “Tentative Method of the Analysis for Gross Beta Radioactivity Content of the Atmosphere”.

(5) Ibid, Method 608, “Tentative Method of Analysis for Strontium-90 Content of Atmospheric Particulate Matter”.

(6) Ibid, Method 609, “Tentative Method of Analysis for Tritium Content of the Atmosphere”.

(7) Ibid, Method 603, “Tentative Method of Analysis for Iodine-131 Content of the Atmosphere”.

(8) American Society for Testing and Materials, 1986 Annual Book ASTM Standards, Designation D–3648–78, “Standard Practices for the Measurement of Radioactivity”. American Society for Testing and Materials, Philadelphia, PA (1986).

(9) Ibid, Designation D–3649–85, “Standard Practice for High Resolution Gamma Spectrometry”.

(10) Ibid, Designation D–1943–81, “Standard Test Method for Alpha Particle Radioactivity of Water”.

(11) Ibid, Designation D–1890–81, “Standard Test Method for Beta Particle Radioactivity of Water”.

(12) Ibid, Designation D–2459–72, “Standard Test Method for Gamma Spectrometry of Water”.

(13) Ibid, Designation D–3972–82, “Standard Test Method for Isotopic Uranium in Water by Radiochemistry”.

(14) Ibid, Designation D–2907–83, “Standard Test Methods for Microquantities of Uranium in Water by Fluorometry”.

(15) Ibid, Designation E–318, “Standard Test Method for Uranium in Aqueous Solutions by Colorimetry”.

(16) Ibid, Designation D–3084–75, “Standard Practice for Alpha Spectrometry of Water”.

(17) Corley, J.P. and C.D. Corbit, “A Guide for Effluent Radiological Measurements at DOE Installations”, DOE/EP–0096, Pacific Northwest Laboratories, Richland, Washington (1983).

(18) Department of Energy, “RESL Analytical Chemistry Branch Procedures Manual”, IDO–12096, U.S. Department of Energy, Idaho Falls, Idaho (1982).

(19) Environmental Protection Agency, “Radiochemical Analytical Procedures for Analysis of Environmental Samples”, EMSL–LV–0539–17, U.S. Environmental Protection Agency, Environmental Monitoring and Support Laboratory, Las Vegas, Nevada (1979).

(20) Environmental Protection Agency, “Radiochemistry Procedures Manual”, EPA 520/5–84–006, Eastern Environmental Radiation Facility, Montgomery, Alabama (1984).

(21) National Council on Radiation Protection and Measurements, NCRP Report No. 50, “Environmental Radiation Measurements”, National Council on Radiation Protection and Measurement, Bethesda, Maryland (1976).

(22) Ibid, Report No. 47, “Tritium Measurement Techniques”. (1976).

(23) Ibid, Report No. 58 “A Handbook of Radioactivity Measurement Procedures” (1985).

(24) Environmental Protection Agency, “Indoor Radon and Radon Decay Product Measurement Protocols”, EPA 520/1–89–009, U.S. Environmental Protection Agency, Washington, DC (1989).

Method 115—Monitoring for Radon-222 Emissions

This appendix describes the monitoring methods which must be used in determining the radon-222 emissions from underground uranium mines, uranium mill tailings piles, phosphogypsum stacks, and other piles of waste material emitting radon.

1. *Radon-222 Emissions from Underground Uranium Mine Vents*

1.1 Sampling Frequency and Calculation of Emissions. Radon-222 emissions from underground uranium mine vents shall be determined using one of the following methods:

1.1.1 Continuous Measurement. These measurements shall be made and the emissions calculated as follows:

(a) The radon-222 concentration shall be continuously measured at each mine vent whenever the mine ventilation system is operational.

(b) Each mine vent exhaust flow rate shall be measured at least 4 times per year.

(c) A weekly radon-222 emission rate for the mine shall be calculated and recorded weekly as follows:

$A_w = C_1Q_1T_1 + C_2Q_2T_2 + \ldots C_iQ_iT_i$

Where:

A_w=Total radon-222 emitted from the mine during week (Ci)

C_i=Average radon-222 concentration in mine vent i(Ci/m^3)

Q_i=Volumetric flow rate from mine vent i(m^3 /hr)

T_i=Hours of mine ventilation system operation during week for mine vent i(hr)

(d) The annual radon-222 emission rate is the sum of the weekly emission rates during a calendar year.

1.1.2 Periodic Measurement. This method is applicable only to mines that continuously operate their ventilation system except for extended shutdowns. Mines which start up and shut down their ventilation system frequently must use the continuous measurement method describe in Section 1.1.1 above. Emission rates determined using periodic measurements shall be measured and calculated as follows:

(a) The radon-222 shall be continuously measured at each mine vent for at least one week every three months.

(b) Each mine vent exhaust flow rate shall be measured at least once during each of the radon-222 measurement periods.

(c) A weekly radon-222 emission rate shall be calculated for each weekly period according to the method described in Section 1.1.1. In this calculation T=168 hr.

(d) The annual radon-222 emission rate from the mine should be calculated as follows:

$$A_y = \frac{52 - W_s}{n} \left(A_{w1} + A_{w2} + \cdots A_{wi} \right)$$

Where:

A_y=Annual radon-222 emission rate from the mine(Ci)

A_{wi}=Weekly radon-222 emission rate during the measurement period i (Ci)

n=Number of weekly measurement periods per year

W_s=Number of weeks during the year that the mine ventilation system is shut down in excess of 7 consecutive days, i.e. the sum of the number of weeks each shut down exceeds 7 days

1.2 Test Methods and Procedures

Each underground mine required to test its emissions, unless an equivalent or alternative method has been approved by the Administrator, shall use the following test methods:

1.2.1 Test Method 1 of appendix A to part 60 shall be used to determine velocity traverses. The sampling point in the duct shall be either the centroid of the cross section or the point of average velocity.

1.2.2 Test Method 2 of appendix A to part 60 shall be used to determine velocity and volumetric flow rates.

1.2.3 Test Methods A–6 or A–7 of appendix B, Method 114 to part 61 shall be used for the analysis of radon–222. Use of Method A–7 requires prior approval of EPA based on conditions described in appendix B.

1.2.4 A quality assurance program shall be conducted in conformance with the programs described for Continuous Radon Monitors and Alpha Track Detectors in EPA 520/1–89–009. (2)

2. *Radon–222 Emissions from Uranium Mill Tailings Piles*

2.1 Measurement and Calculation of Radon Flux from Uranium Mill Tailings Piles.

2.1.1 Frequency of Flux Measurement. A single set of radon flux measurements may be made, or if the owner or operator chooses, more frequent measurements may be made over a one year period. These measurements may involve quarterly, monthly or weekly intervals. All radon measurements shall be made as described in paragraphs 2.1.2 through 2.1.6 except that for measurements made over a one year period, the requirement of paragraph 2.1.4(c) shall not apply. The mean radon flux from the pile shall be the arithmetic mean of the mean radon flux for each measurement period. The weather conditions, moisture content of the tailings and area of the pile covered by water existing at the time of the measurement shall be chosen so as to provide measurements representative of the long term radon flux from the pile and shall be subject to EPA review and approval.

2.1.2 Distribution of Flux Measurements. The distribution and number of radon flux measurements required on a pile will depend on clearly defined areas of the pile (called regions) that can have significantly different radon fluxes due to surface conditions. The mean radon flux shall be determined for each individual region of the pile. Regions that shall be considered for operating mill tailings piles are:

(a) Water covered areas,

(b) Water saturated areas (beaches),

(c) Dry top surface areas, and

(d) Sides, except where earthen material is used in dam construction.

For mill tailings after disposal the pile shall be considered to consist of only one region.

2.1.3 Number of Flux Measurements. Radon flux measurements shall be made within each region on the pile, except for those areas covered with water. Measurements shall be made at regularly spaced locations across the surface of the region, realizing that surface roughness will prohibit measurements in some areas of a region. The minimum number of flux measurements considered necessary to determine a representative mean radon flux value for each type of region on an operating pile is:

(a) Water covered area—no measurements required as radon flux is assumed to be zero,

(b) Water saturated beaches—100 radon flux measurements,

(c) Loose and dry top surface—100 radon flux measurements,

(d) Sides—100 radon flux measurements, except where earthern material is used in dam construction.

For a mill tailings pile after disposal which consists of only one region a minimum of 100 measurements are required.

2.1.4 Restrictions to Radon Flux Measurements. The following restrictions are placed on making radon flux measurements:

(a) Measurements shall not be initiated within 24 hours of a rainfall.

(b) If a rainfall occurs during the 24 hour measurements period, the measurement is invalid if the seal around the lip of the collector has washed away or if the collector is surrounded by water.

(c) Measurements shall not be performed if the ambient temperature is below 35 °F or if the ground is frozen.

2.1.5 Areas of Pile Regions. The approximate area of each region of the pile shall be determined in units of square meters.

2.1.6 Radon Flux Measurement. Measuring radon flux involves the adsorption of radon on activated charcoal in a large-area collector. The radon collector is placed on the surface of the pile area to be measured and allowed to collect radon for a time period of 24 hours. The radon collected on the charcoal is measured by gamma-ray spectroscopy. The detailed measurement procedure provided in appendix A of EPA 520/5–85–0029(1) shall be used to measure the radon flux on uranium mill tailings, except the surface of the tailings shall not be penetrated by the lip of the radon collector as directed in the procedure, rather the collector shall be carefully positioned on a flat surface with soil or tailings used to seal the edge.

2.1.7 Calculations. The mean radon flux for each region of the pile and for the total pile shall be calculated and reported as follows:

(a) The individual radon flux calculations shall be made as provided in appendix A EPA 86 (1). The mean radon flux for each region of the pile shall be calculated by summing all individual flux measurements for the region and dividing by the total number of flux measurements for the region.

(b) The mean radon flux for the total uranium mill tailings pile shall be calculated as follows.

$$J_s = \frac{J_1 A_1 + \cdots J_2 A_2 \cdots J_i A_i}{A_t}$$

Where:

J_s=Mean flux for the total pile (pCi/m^2 -s)

J_i=Mean flux measured in region i (pCi/m^2 -s)

A_i=Area of region i (m^2)

A_t=Total area of the pile (m^2)

2.1.8 Reporting. The results of individual flux measurements, the approximate locations on the pile, and the mean radon flux for each region and the mean radon flux for the total stack shall be included in the emission test report. Any condition or unusual event that occurred during the measurements that could significantly affect the results should be reported.

3.0 Radon-222 Emissions from Phosphogypsum Stacks.

3.1 Measurement and Calculation of the Mean Radon Flux. Radon flux measurements shall be made on phosphogypsum stacks as described below:

3.1.1 Frequency of Measurements. A single set of radon flux measurements may be made after the phosphogypsum stack becomes inactive, or if the owner or operator chooses, more frequent measurements may be made over a one year period. These measurements may involve quarterly, monthly or weekly intervals. All radon measurements shall be made as described in paragraphs 3.1.2 through 3.1.6 except that for measurements made over a one year period, the requirement of paragraph 3.1.4(c) shall not apply. For measurements made over a one year period, the radon flux shall be the arithmetic mean of the mean radon flux for each measurement period.

3.1.2 Distribution and Number of Flux Measurements. The distribution and number of radon flux measurements required on a stack will depend on clearly defined areas of the stack (called regions) that can have significantly different radon fluxes due to surface conditions. The mean radon flux shall be determined for each individual region of the stack. Regions that shall be considered are:

(a) Water covered areas,

(b) Water saturated areas (beaches),

(c) Loose and dry top surface areas,

(d) Hard-packed roadways, and

(e) Sides.

3.1.3 Number of Flux Measurements. Radon flux measurements shall be made within each region on the phosphogypsum stack, except for those areas covered with water. Measurements shall be made at regularly spaced locations across the surface of the region, realizing that surface roughness will prohibit measurements in some areas of a region. The minimum number of flux measurements considered necessary to determine a representative mean radon flux value for each type of region is:

(a) Water covered area—no measurements required as radon flux is assumed to be zero,

(b) Water saturated beaches—50 radon flux measurements,

(c) Loose and dry top surface—100 radon flux measurements,

(d) Hard-packed roadways—50 radon flux measurements, and

(e) Sides—100 radon flux measurements.

A minimum of 300 measurements are required. A stack that has no water cover can be considered to consist of two regions, top and sides, and will require a minimum of only 200 measurements.

3.1.4 Restrictions to Radon Flux Measurements. The following restrictions are placed on making radon flux measurements:

(a) Measurements shall not be initiated within 24 hours of a rainfall.

(b) If a rainfall occurs during the 24 hour measurement period, the measurement is invalid if the seal around the lip of the collector has washed away or if the collector is surrounded by water.

(c) Measurements shall not be performed if the ambient temperature is below 35 °F or if the ground is frozen.

3.1.5 Areas of Stack Regions. The approximate area of each region of the stack shall be determined in units of square meters.

3.1.6 Radon Flux Measurements. Measuring radon flux involves the adsorption of radon on activated charcoal in a large-area collector. The radon collector is placed on the surface of the stack area to be measured and allowed to collect radon for a time period of 24 hours. The radon collected on the charcoal is measured by gamma-ray spectroscopy. The detailed measurement procedure provided in appendix A of EPA 520/5–85–0029(1) shall be used to measure the radon flux on phosphogypsum stacks, except the surface of the phosphogypsum shall not be penetrated by the lip of the radon collector as directed in the procedure, rather the collector shall be carefully positioned on a flat surface with soil or phosphogypsum used to seal the edge.

3.1.7 Calculations. The mean radon flux for each region of the phosphogypsum stack and for the total stack shall be calculated and reported as follows:

(a) The individual radon flux calculations shall be made as provided in appendix A EPA 86 (1). The mean radon flux for each region of the stack shall be calculated by summing all individual flux measurements for the region and dividing by the total number of flux measurements for the region.

(b) The mean radon flux for the total phosphogypsum stack shall be calculated as follows.

$$J_s = \frac{J_1 A_1 + J_2 A_2 + \cdots J_i A_i}{A_t}$$

Where:

J_s=Mean flux for the total stack (pCi/m^2 -s)

J_i=Mean flux measured in region i (pCi/m^2 -s)

A_i=Area of region i (m^2)

A_t=Total area of the stack

3.1.8 Reporting. The results of individual flux measurements, the approximate locations on the stack, and the mean radon flux for each region and the mean radon flux for the total stack shall be included in the emission test report. Any condition or unusual event that occurred during the measurements that could significantly affect the results should be reported.

4.0 Quality Assurance Procedures for Measuring Rn–222 Flux

A. Sampling Procedures

Records of field activities and laboratory measurements shall be maintained. The following information shall be recorded for each charcoal canister measurement:

(a) Site

(b) Name of pile

(c) Sample location

(d) Sample ID number

(e) Date and time on

(f) Date and time off

(g) Observations of meteorological conditions and comments

Records shall include all applicable information associated with determining the sample measurement, calculations, observations, and comments.

B. Sample Custody

Custodial control of all charcoal samples exposed in the field shall be maintained in accordance with EPA chain-of-custody field procedures. A control record shall document all custody changes that occur between the field and laboratory personnel.

C. Calibration Procedures and Frequency

The radioactivity of two standard charcoal sources, each containing a carefully determined quantity of radium-226 uniformly distributed through 180g of activated charcoal, shall be measured. An efficiency factor is computed by dividing the average measured radioactivity of the two standard charcoal sources, minus the background, in cpm by the known radioactivity of the charcoal sources in dpm. The same two standard charcoal sources shall be counted at the beginning and at the end of each day's counting as a check of the radioactivity counting equipment. A background count using unexposed charcoal should also be made at the beginning and at the end of each counting day to check for inadvertent contamination of the detector or other changes affecting the background. The unexposed charcoal comprising the blank is changed with each new batch of charcoal used.

D. Internal Quality Control Checks and Frequency

The charcoal from every tenth exposed canister shall be recounted. Five percent of the samples analyzed shall be either blanks (charcoal having no radioactivity added) or samples spiked with known quantities of radium-226.

E. Data Precision, Accuracy, and Completeness

The precision, accuracy, and completeness of measurements and analyses shall be within the following limits for samples measuring greater than 1.0 pCi/m^2 −s.

(a) Precision: 10%

(b) Accuracy: ±10%

(c) Completeness: at least 85% of the measurements must yield useable results.

5.0 References

(1) Hartley, J.N. and Freeman, H.D., “Radon Flux Measurements on Gardinier and Royster phosphogypsum Piles Near Tampa and Mulberry, Florida,” U.S. Environmental Protection Agency Report, EPA 520/5–85–029, January 1986.

(2) Environmental Protection Agency, “Indoor Radon and Radon Decay Product Measurement Protocols”, EPA 520/1–89–009, U.S. Environmental Protection Agency, Washington, DC. (1989).

[38 FR 8826, Apr. 6, 1973]

Editorial Notes: 1. ForFederal Registercitations to appendix B see the List of CFR Sections Affected, which appears in the Finding Aids section of the printed volume and on GPO Access.

2. At 65 FR 62161, Oct. 17, 2000, appendix B to part 61 was amended by revising Methods 101, 101A, 102, 103, 104, 105, 106, 107, 107A, 108, 108A, 108B, 108C, and 111. However, because the amendment contains no revised text for Method 107A, this part of the revision could not be incorporated.

Appendix C to Part 61—Quality Assurance Procedures

Procedure 1—Determination of Adequate Chromatographic Peak Resolution

In this method of dealing with resolution, the extent to which one chromatographic peak overlaps another is determined.

For convenience, consider the range of the elution curve of each compound as running from -2σ to $+2\sigma$. This range is used in other resolution criteria, and it contains 95.45 percent of the area of a normal curve. If two peaks are separated by a known distance, b, one can determine the fraction of the area of one curve that lies within the range of the other. The extent to which the elution curve of a contaminant compound overlaps the curve of a compound that is under analysis is found by integrating the contaminant curve over the limits $b-2\sigma_s$ to $b+2\sigma_s$, where σ_s is the standard deviation of the sample curve.

This calculation can be simplified in several ways. Overlap can be determined for curves of unit area; then actual areas can be introduced. Desired integration can be resolved into two integrals of the normal distribution function for which there are convenient calculation programs and tables. An example would be Program 15 in Texas Instruments Program Manual ST1, 1975, Texas Instruments, Inc., Dallas, Texas 75222.

$$\frac{1}{\sqrt{2\pi}\sigma_c}\int_{b-2\sigma_s}^{b+2\sigma_s} e^{\left(\frac{-t^2}{2\sigma_c^2}\right)}dt = \frac{1}{\sqrt{2\pi}}\int_{\frac{b-2\sigma_s}{\sigma_c}}^{\infty} e^{\left(\frac{-x^2}{2}\right)}dx - \frac{1}{\sqrt{2\pi}}\int_{\frac{b+2\sigma_s}{\sigma_c}}^{\infty} e^{\left(\frac{-x^2}{2}\right)}dx$$

The following calculation steps are required:*

1. $2\sigma_s = t_s/\sqrt{2 \ln 2}$
2. $\sigma_c = t_c/2\sqrt{2 \ln 2}$
3. $x_1 = (b-2\sigma_s)/\sigma_c$
4. $x_2 = (b+2\sigma_s)/\sigma_c$
5. $Q(x_1) = \frac{1}{\sqrt{2\pi}}\int_{x_1}^{\infty} e^{\left(\frac{-x^2}{2}\right)}dx$
6. $Q(x_2) = \frac{1}{\sqrt{2\pi}}\int_{x_2}^{\infty} e^{\left(\frac{-x^2}{2}\right)}dx$
7. $I_o = Q(x_1) - Q(x_2)$
8. $A_o = I_o A_c/A_s$
9. Percentage overlap = $A_o \times 100$,

where:

A_s = Area of the sample peak of interest determined by electronic integration or by the formula $A_s = h_s t_s$.

A_c = Area of the contaminant peak, determined in the same manner as A_s.

b = Distance on the chromatographic chart that separates the maxima of the two peaks.

H_s = Peak height of the sample compound of interest, measured from the average value of the baseline to the maximum of the curve.

t_s = Width of sample peak of interest at 1/2 peak height.

t_c = Width of the contaminant peak at 1/2 of peak height.

σ_s = Standard deviation of the sample compound of interest elution curve.

σ_c = Standard deviation of the contaminant elution curve.

$Q(x_1)$ = Integral of the normal distribution function from x_1 to infinity.

$Q(x_2)$ = Integral of the normal distribution function from x_2 to infinity.

I_o = Overlap integral.

A_o = Area overlap fraction.

*In most instances, $Q(x_2)$ is very small and may be neglected.

View or download PDF

In judging the suitability of alternate GC columns or the effects of altering chromatographic conditions, one can employ the area overlap as the resolution parameter with a specific maximum permissible value.

The use of Gaussian functions to describe chromatographic elution curves is widespread. However, some elution curves are highly asymmetric. In cases where the sample peak is followed by a contaminant that has a leading edge that rises sharply but the curve then tails off, it may be possible to define an effective width for $t_c$as “twice the distance from the leading edge to a perpendicular line through the maxim of the contaminant curve, measured along a perpendicular bisection of that line.”

Procedure 2—Procedure for Field Auditing GC Analysis

Responsibilities of audit supervisor and analyst at the source sampling site include the following:

A. The audit supervisor verifies that audit cylinders are stored in a safe location both before and after the audit to prevent vandalism.

B. At the beginning and conclusion of the audit, the analyst records each cylinder number and pressure. An audit cylinder is never analyzed when the pressure drops below 200 psi.

C. During the audit, the analyst performs a minimum of two consecutive analyses of each audit cylinder gas. The audit must be conducted to coincide with the analysis of source test samples, normally immediately after GC calibration and prior to sample analyses.

D. At the end of audit analyses, the audit supervisor requests the calculated concentrations from the analyst and compares the results with the actual audit concentrations. If each measured concentration agrees with the respective actual concentration within ±10 percent, he directs the analyst to begin analyzing source samples. Audit supervisor judgment and/or supervisory policy determine action when agreement is not within ±10 percent. When a consistent bias in excess of 10 percent is found, it may be possible to proceed with the sample analysis, with a corrective factor to be applied to the results at a later time. However, every attempt should be made to locate the cause of the discrepancy, as it may be misleading. The audit supervisor records each cylinder number, cylinder pressure (at the end of the audit), and all calculated concentrations. The individual being audited must not under any circumstance be told actual audit concentrations until calculated concentrations have been submitted to the audit supervisor.

Field Audit Report

Part A— To be filled out by organization supplying audit cylinders.

1. Organization supplying audit sample(s) and shipping address

_____

2. Audit supervisor, organization, and phone number

_____
_____

3. Shipping instructions: Name, Address, Attention

_____
_____
_____

4. Guaranteed arrival date for cylinders_____
5. Planned shipping date for cylinders_____

6. Details on audit cylinders from last analysis

	Low conc.	**High conc.**
a. Date of last analysis		
b. Cylinder number		
c. Cylinder pressure, psi		
d. Audit gas(es)/balance gas		
e. Audit gas(es), ppm		
f. Cylinder construction		

Part B —To be filled out by audit supervisor.

1. Process sampled_____
_____

2. Audit location_____
_____
3. Name of individual audit_____
4. Audit date_____

5. Audit results:

	Low conc. cylinder	High conc. cylinder
a. Cylinder number		
b. Cylinder pressure before audit, psi		
c. Cylinder pressure after audit, psi		
d. Measured concentration, ppm Injection #1* Injection #2* Average		
e. Actual audit concentration, ppm (Part A, 6e)		
f. Audit accuracy:[1]		
Low Conc. Cylinder		
High Conc. Cylinder		
Percent[1]accuracy=		
Measured Conc.−Actual Conc.		
_____ ×100		
Actual Conc.		
g. Problems detected (if any)		

[1]Results of two consecutive injections that meet the sample analysis criteria of the test method.

[47 FR 39178, Sept. 7, 1982]

Appendix D to Part 61—Methods for Estimating Radionuclide Emissions

1. Purpose and Background

Facility owners or operators may estimate radionuclide emissions to the atmosphere for dose calculations instead of measuring emissions. Particulate emissions from mill tailings piles should be estimated using the procedures listed in reference re #2. All other emissions may be estimated by using the “Procedures” listed below, or using the method described in reference #1.

2. Procedure

To estimate emissions to the atmosphere:

(a) Determine the amount (in curies) used at facilities for the period under consideration. Radioactive materials in sealed packages that remain unopened, and have not leaked during the assessment period should not be included in the calculation.

(b) Multiply the amount used by the following factors which depend on the physical state of the radionuclide. They are:

(i) 1 for gases;

(ii) $10^{-3}$for liquids or particulate solids; and

(iii) $10^{-6}$for solids.

If any nuclide is heated to a temperature of 100 degrees Celsius or more, boils at a temperature of 100 degrees Celsius or less, or is intentionally dispersed into the environment, it must be considered to be a gas.

(c) If a control device is installed between the place of use and the point of release, multiply emissions from (b) by an adjustment factor. These are presented in Table 1.

Table 1—Adjustment to Emission Factors for Effluent Controls

Controls	Types of radionuclides controlled	Adjustment factor to emissions	Comments and conditions
HEPA filters	Particulates	0.01	Not applicable to gaseous radionuclides; periodic testing is prudent to ensure high removal efficiency.
Fabric filter	Particulates	0.1	Monitoring would be prudent to guard against tears in filter.
Sintered metal	Particulates	1	Insufficient data to make recommendation.
Activated carbon filters	Iodine gas	0.1	Efficiency is time dependent; monitoring is necessary to ensure effectiveness.
Douglas bags: Held one week or longer for decay	Xenon	0.5/wk	Based on xenon half-life of 5.3 days;
Douglas bags: Released within one week	Xenon	1	Provides no reduction of exposure to general public.
Venturi scrubbers	Particulates Gases	0.05 1	Although venturis may remove gases, variability in gaseous removal efficiency dictates adjustment factor for particulates only.
Packed bed scrubbers	Gases	0.1	Not applicable to particulates.
Electrostatic precipitators	Particulates	0.05	Not applicable for gaseous radionuclides

Xenon traps	Xenon	0.1	Efficiency is time dependent; monitoring is necessary to ensure effectiveness.
Fume hoods	All	1	Provides no reduction to general public exposures.
Vent stacks	All	1	Generally provides no reduction of exposure to general public.

References

(1) Environmental Protection Agency, “A Guide for Determining Compliance with the Clean Air Act Standards for Radionuclides Emissions from NRC-Licensed and Non-DOE Federal Facilities”, EPA 520/1–89–002, January 1989.

(2) Nuclear Regulatory Commission, “Methods for Estimating Radioactive and Toxic Airborne Source Terms for Uranium Milling Operations”, U.S. Nuclear Regulatory Commission Regulatory Guide 3.59, March 1987.

[54 FR 51711, Dec. 15, 1989]

Appendix E to Part 61—Compliance Procedures Methods for Determining Compliance With Subpart I

1. Purpose and Background

This Appendix provides simplified procedures to reduce the burden on Nuclear Regulatory Commission (NRC) licensees, and non-Department of Energy Federal facilities in determining compliance with 40 CFR part 61, subpart I. The procedures consist of a series of increasingly more stringent steps, depending on the facility's potential to exceed the standard.

First, a facility can be found in compliance if the quantity of radioactive material possessed during the year is less than that listed in a table of annual possession quantities. A facility will also be in compliance if the average annual radionuclide emission concentration is less than that listed in a table of air concentration levels. If the facility is not in compliance by these tables, it can establish compliance by estimating a dose using screening procedure developed by the National Council on Radiation Protection and Measurements with a radiological source term derived using EPA approved emission factors. These procedures are described in a “Guide for Determining Compliance with the Clean Air Act Standards for Radionuclide Emissions From NRC-Licenced and Non-DOE Federal Facilities.”

A user-friendly computer program called COMPLY has been developed to reduce the burden on the regulated community. The Agency has also prepared a “User's Guide for the COMPLY Code” to assist the regulated community in using the code, and in handling more complex situations such as multiple release points. The basis for these compliance procedures are provided in “Background Information Document: Procedures Approved for Demonstrating Compliance with 40 CFR Part 61, Subpart I”. The compliance model is the highest level in the COMPLY computer code and provides for the most realistic assessment of dose by allowing the use of site-specific information.

2. Table of Annual Possession Quantity

(a) Table 1 may be used for determining if facilities are in compliance with the standard. The possession table can only be used if the following conditions are met:

(i) No person lives within 10 meters of any release point; and

(ii) No milk, meat, or vegetables are produced within 100 meters of any release point.

(b) Procedures described in Reference (1) shall be used to determine compliance or exemption from reporting by use of Table 2.

Table 1—Annual Possession Quantities for Environmental Compliance

[Annual Possession Quantities (Ci/yr)]

Radionuclide	Gaseous form*	Liquid/powder forms	Solid form*
Ac-225	9.6E−05	9.6E−02	9.6E+01
Ac-227	1.6E−07	1.6E−04	1.6E−01
Ac-228	3.4E−03	3.4E+00	3.4E+03
Ag-106	1.6E+00	1.6E+03	1.6E+06
Ag-106m	2.6E−03	2.6E+00	2.6E+03
Ag-108m	6.5E−06	6.5E−03	6.5E+00
Ag-110m	9.4E−05	9.4E−02	9.4E+01
Ag-111	6.7E−02	6.7E+01	6.7E+04
Al-26	4.0E−06	4.0E−03	4.0E+00
Am-241	2.3E−06	2.3E−03	2.3E+00
Am-242	1.8E−02	1.8E+01	1.8E+04
Am-242m	2.5E−06	2.5E−03	2.5E+00
Am-243	2.3E−06	2.3E−03	2.3E+00
Am-244	4.6E−02	4.6E+01	4.6E+04
Am-245	7.0E+00	7.0E+03	7.0E+06
Am-246	9.8E−01	9.8E+02	9.8E+05
Ar-37	1.4E+06		
Ar-41	1.4E+00		
As-72	2.9E−02	2.9E+01	2.9E+04
As-73	6.0E−02	6.0E+01	6.0E+04
As-74	4.3E−03	4.3E+00	4.3E+03
As-76	8.8E−02	8.8E+01	8.8E+04
As-77	7.9E−01	7.9E+02	7.9E+05
At-211	1.0E−02	1.0E+01	1.0E+04
Au-193	4.2E−01	4.2E+02	4.2E+05
Au-194	3.5E−02	3.5E+01	3.5E+04

Au-195	3.3E−03	3.3E+00	3.3E+03
Au-198	4.6E−02	4.6E+01	4.6E+04
Au-199	1.5E−01	1.5E+02	1.5E+05
Ba-131	1.0E−02	1.0E+01	1.0E+04
Ba-133	4.9E−05	4.9E−02	4.9E+01
Ba-133m	9.3E−02	9.3E+01	9.3E+04
Ba-135m	5.8E−01	5.8E+02	5.8E+05
Ba-139	4.7E+00	4.7E+03	4.7E+06
Ba-140	2.1E−03	2.1E+00	2.1E+03
Ba-141	1.3E+00	1.3E+03	1.3E+06
Ba-142	1.1E+00	1.1E+03	1.1E+06
Be-7	2.3E−02	2.3E+01	2.3E+04
Be-10	3.0E−03	3.0E+00	3.0E+03
Bi-206	3.1E−03	3.1E+00	3.1E+03
Bi-207	8.4E−06	8.4E−03	8.4E+00
Bi-210	4.2E−03	4.2E+00	4.2E+03
Bi-212	4.7E−02	4.7E+01	4.7E+04
Bi-213	6.0E−02	6.0E+01	6.0E+04
Bi-214	1.4E−01	1.4E+02	1.4E+05
Bk-249	7.0E−04	7.0E−01	7.0E+02
Bk-250	1.0E−01	1.0E+02	1.0E+05
Br-77	7.5E−02	7.5E+01	7.5E+04
Br-80	1.2E+01	1.2E+04	1.2E+07
Br-80m	1.5E+00	1.5E+03	1.5E+06
Br-82	1.6E−02	1.6E+01	1.6E+04
Br-83	9.9E+00	9.9E+03	9.9E+06
Br-84	5.6E−01	5.6E+02	5.6E+05
C-11	1.3E+00	1.3E+03	1.3E+06
C-14	2.9E−01	2.9E+02	2.9E+05
Ca-41	2.7E−02	2.7E+01	2.7E+04
Ca-45	5.8E−02	5.8E+01	5.8E+04

Ca-47	1.1E−02	1.1E+01	1.1E+04
Cd-109	5.0E−03	5.0E+00	5.0E+03
Cd-113	3.3E−04	3.3E−01	3.3E+02
Cd-113m	4.4E−04	4.4E−01	4.4E+02
Cd-115	5.4E−02	5.4E+01	5.4E+04
Cd-115m	1.0E−02	1.0E+01	1.0E+04
Cd-117	5.6E−02	5.6E+01	5.6E+04
Cd-117m	1.3E−01	1.3E+02	1.3E+05
Ce-139	2.6E−03	2.6E+00	2.6E+03
Ce-141	1.8E−02	1.8E+01	1.8E+04
Ce-143	1.0E−01	1.0E+02	1.0E+05
Ce-144	1.7E−03	1.7E+00	1.7E+03
Cf-248	2.0E−05	2.0E−02	2.0E+01
Cf-249	1.7E−06	1.7E−03	1.7E+00
Cf-250	4.0E−06	4.0E−03	4.0E+00
Cf-251	1.7E−06	1.7E−03	1.7E+00
Cf-252	6.4E−06	6.4E−03	6.4E+00
Cf-253	3.3E−04	3.3E−01	3.3E+02
Cf-254	3.6E−06	3.6E−03	3.6E+00
Cl-36	1.9E−04	1.9E−01	1.9E+02
Cl-38	6.5E−01	6.5E+02	6.5E+05
Cm-242	6.0E−05	6.0E−02	6.0E+01
Cm-243	3.3E−06	3.3E−03	3.3E+00
Cm-244	4.2E−06	4.2E−03	4.2E+00
Cm-245	2.3E−06	2.3E−03	2.3E+00
Cm-246	2.3E−06	2.3E−03	2.3E+00
Cm-247	2.3E−06	2.3E−03	2.3E+00
Cm-248	6.4E−07	6.4E−04	6.4E−01
Cm-249	4.6E+00	4.6E+03	4.6E+06
Cm-250	1.1E−07	1.1E−04	1.1E−01
Co-56	2.4E−04	2.4E−01	2.4E+02

Co-57	1.6E−03	1.6E+00	1.6E+03
Co-58	9.0E−04	9.0E−01	9.0E+02
Co-58m	1.7E−01	1.7E+02	1.7E+05
Co-60	1.6E−05	1.6E−02	1.6E+01
Co-60m	4.0E+00	4.0E+03	4.0E+06
Co-61	3.8E+00	3.8E+03	3.8E+06
Cr-49	9.0E−01	9.0E+02	9.0E+05
Cr-51	6.3E−02	6.3E+01	6.3E+04
Cs-129	1.5E−01	1.5E+02	1.5E+05
Cs-131	2.8E−01	2.8E+02	2.8E+05
Cs-132	1.3E−02	1.3E+01	1.3E+04
Cs-134	5.2E−05	5.2E−02	5.2E+01
Cs-134m	3.2E−01	3.2E+02	3.2E+05
Cs-135	2.4E−02	2.4E+01	2.4E+04
Cs-136	2.1E−03	2.1E+00	2.1E+03
Cs-137	2.3E−05	2.3E−02	2.3E+01
Cs-138	4.4E−01	4.4E+02	4.4E+05
Cu-61	4.0E−01	4.0E+02	4.0E+05
Cu-64	5.2E−01	5.2E+02	5.2E+05
Cu-67	1.5E−01	1.5E+02	1.5E+05
Dy-157	4.4E−01	4.4E+02	4.4E+05
Dy-165	5.6E+00	5.6E+03	5.6E+06
Dy-166	8.1E−02	8.1E+01	8.1E+04
Er-169	4.0E−01	4.0E+02	4.0E+05
Er-171	3.6E−01	3.6E+02	3.6E+05
Es-253	2.6E−04	2.6E−01	2.6E+02
Es-254	2.3E−05	2.3E−02	2.3E+01
Es-254m	1.8E−03	1.8E+00	1.8E+03
Eu-152	1.6E−05	1.6E−02	1.6E+01
Eu-152m	3.5E−01	3.5E+02	3.5E+05
Eu-154	2.0E−05	2.0E−02	2.0E+01

Eu-155	5.2E−04	5.2E−01	5.2E+02
Eu-156	3.2E−03	3.2E+00	3.2E+03
F-18	5.6E−01	5.6E+02	5.6E+05
Fe-52	4.9E−02	4.9E+01	4.9E+04
Fe-55	1.4E−01	1.4E+02	1.4E+05
Fe-59	1.3E−03	1.3E+00	1.3E+03
Fm-254	1.8E−02	1.8E+01	1.8E+04
Fm-255	4.0E−03	4.0E+00	4.0E+03
Fr-223	1.4E−01	1.4E+02	1.4E+05
Ga-66	5.6E−02	5.6E+01	5.6E+04
Ga-67	1.1E−01	1.1E+02	1.1E+05
Ga-68	7.6E−01	7.6E+02	7.6E+05
Ga-72	3.6E−02	3.6E+01	3.6E+04
Gd-152	4.4E−06	4.4E−03	4.4E+00
Gd-153	2.0E−03	2.0E+00	2.0E+03
Gd-159	6.8E−01	6.8E+02	6.8E+05
Ge-68	2.3E−04	2.3E−01	2.3E+02
Ge-71	2.6E+00	2.6E+03	2.6E+06
Ge-77	1.0E−01	1.0E+02	1.0E+05
H-3	1.5E+01	1.5E+04	1.5E+07
Hf-181	2.5E−03	2.5E+00	2.5E+03
Hg-193m	9.5E−02	9.5E+01	9.5E+04
Hg-197	2.4E−01	2.4E+02	2.4E+05
Hg-197m	2.5E−01	2.5E+02	2.5E+05
Hg-203	5.2E−03	5.2E+00	5.2E+03
Ho-166	2.8E−01	2.8E+02	2.8E+05
Ho-166m	6.0E−06	6.0E−03	6.0E+00
I-123	4.9E−01	4.9E+02	4.9E+05
I-124	9.3E−03	9.3E+00	9.3E+03
I-125	6.2E−03	6.2E+00	6.2E+03
I-126	3.7E−03	3.7E+00	3.7E+03

I-128	9.3E+00	9.3E+03	9.3E+06
I-129	2.6E−04	2.6E−01	2.6E+02
I-130	4.6E−02	4.6E+01	4.6E+04
I-131	6.7E−03	6.7E+00	6.7E+03
I-132	2.0E−01	2.0E+02	2.0E+05
I-133	6.7E−02	6.7E+01	6.7E+04
I-134	3.2E−01	3.2E+02	3.2E+05
I-135	1.2E−01	1.2E+02	1.2E+05
In-111	4.9E−02	4.9E+01	4.9E+04
In-113m	2.1E+00	2.1E+03	2.1E+06
In-114m	4.9E−03	4.9E+00	4.9E+03
In-115	2.7E−04	2.7E−01	2.7E+02
In-115m	1.4E+00	1.4E+03	1.4E+06
In-116m	3.5E−01	3.5E+02	3.5E+05
In-117	1.3E+00	1.3E+03	1.3E+06
In-117m	7.6E−02	7.6E+01	7.6E+04
Ir-190	3.5E−03	3.5E+00	3.5E+03
Ir-192	9.7E−04	9.7E−01	9.7E+02
Ir-194	2.5E−01	2.5E+02	2.5E+05
Ir-194m	1.5E−04	1.5E−01	1.5E+02
K-40	6.8E−05	6.8E−02	6.8E+01
K-42	2.9E−01	2.9E+02	2.9E+05
K-43	6.0E−02	6.0E+01	6.0E+04
K-44	4.9E−01	4.9E+02	4.9E+05
Kr-79	7.0E+00		
Kr-81	1.8E+02		
Kr-83m	2.0E+04		
Kr-85	8.4E+02		
Kr-85m	1.1E+01		
Kr-87	2.0E+00		

Kr-88	4.2E−01		
La-140	1.6E−02	1.6E+01	1.6E+04
La-141	1.1E+00	1.1E+03	1.1E+06
La-142	2.3E−01	2.3E+02	2.3E+05
Lu-177	1.4E−01	1.4E+02	1.4E+05
Lu-177m	3.5E−04	3.5E−01	3.5E+02
Mg-28	2.1E−02	2.1E+01	2.1E+04
Mn-52	3.5E−03	3.5E+00	3.5E+03
Mn-52m	5.2E−01	5.2E+02	5.2E+05
Mn-53	5.7E−02	5.7E+01	5.7E+04
Mn-54	2.5E−04	2.5E−01	2.5E+02
Mn-56	2.5E−01	2.5E+02	2.5E+05
Mo-93	1.5E−03	1.5E+00	1.5E+03
Mo-99**	5.7E−02	5.7E+01	5.7E+04
Mo-101	8.4E−01	8.4E+02	8.4E+05
Na-22	3.2E−05	3.2E−02	3.2E+01
Na-24	2.6E−02	2.6E+01	2.6E+04
Nb-90	2.5E−02	2.5E+01	2.5E+04
Nb-93m	1.2E−02	1.2E+01	1.2E+04
Nb-94	6.0E−06	6.0E−03	6.0E+00
Nb-95	2.3E−03	2.3E+00	2.3E+03
Nb-95m	2.0E−02	2.0E+01	2.0E+04
Nb-96	2.5E−02	2.5E+01	2.5E+04
Nb-97	1.0E+00	1.0E+03	1.0E+06
Nd-147	3.0E−02	3.0E+01	3.0E+04
Nd-149	1.1E+00	1.1E+03	1.1E+06
Ni-56	2.0E−03	2.0E+00	2.0E+03
Ni-57	2.1E−02	2.1E+01	2.1E+04
Ni-59	2.2E−02	2.2E+01	2.2E+04
Ni-63	1.4E−01	1.4E+02	1.4E+05
Ni-65	7.0E−01	7.0E+02	7.0E+05

Np-235	3.0E−02	3.0E+01	3.0E+04
Np-237	1.8E−06	1.8E−03	1.8E+00
Np-238	1.9E−02	1.9E+01	1.9E+04
Np-239	1.0E−01	1.0E+02	1.0E+05
Np-240	6.5E−01	6.5E+02	6.5E+05
Np-240m	4.7E+00	4.7E+03	4.7E+06
Os-185	9.2E−04	9.2E−01	9.2E+02
Os-191m	9.0E−01	9.0E+02	9.0E+05
Os-191	3.8E−02	3.8E+01	3.8E+04
Os-193	2.9E−01	2.9E+02	2.9E+05
P-32	1.7E−02	1.7E+01	1.7E+04
P-33	1.2E−01	1.2E+02	1.2E+05
Pa-230	6.3E−04	6.3E−01	6.3E+02
Pa-231	8.3E−07	8.3E−04	8.3E−01
Pa-233	9.3E−03	9.3E+00	9.3E+03
Pa-234	9.3E−02	9.3E+01	9.3E+04
Pb-203	8.3E−02	8.3E+01	8.3E+04
Pb-205	1.2E−02	1.2E+01	1.2E+04
Pb-209	1.1E+01	1.1E+04	1.1E+07
Pb-210	5.5E−05	5.5E−02	5.5E+01
Pb-211	1.2E−01	1.2E+02	1.2E+05
Pb-212	6.0E−03	6.0E+00	6.0E+03
Pb-214	1.2E−01	1.2E+02	1.2E+05
Pd-103	2.1E−01	2.1E+02	2.1E+05
Pd-107	8.2E−02	8.2E+01	8.2E+04
Pd-109	9.4E−01	9.4E+02	9.4E+05
Pm-143	7.6E−04	7.6E−01	7.6E+02
Pm-144	1.1E−04	1.1E−01	1.1E+02
Pm-145	5.2E−04	5.2E−01	5.2E+02
Pm-146	4.4E−05	4.4E−02	4.4E+01
Pm-147	2.6E−02	2.6E+01	2.6E+04

Pm-148	1.7E−02	1.7E+01	1.7E+04
Pm-148m	7.6E−04	7.6E−01	7.6E+02
Pm-149	2.8E−01	2.8E+02	2.8E+05
Pm-151	1.2E−01	1.2E+02	1.2E+05
Po-210	9.3E−05	9.3E−02	9.3E+01
Pr-142	2.8E−01	2.8E+02	2.8E+05
Pr-143	1.0E−01	1.0E+02	1.0E+05
Pr-144	1.5E+01	1.5E+04	1.5E+07
Pt-191	6.4E−02	6.4E+01	6.4E+04
Pt-193	2.1E−02	2.1E+01	2.1E+04
Pt-193m	4.8E−01	4.8E+02	4.8E+05
Pt-195m	1.4E−01	1.4E+02	1.4E+05
Pt-197	1.1E+00	1.1E+03	1.1E+06
Pt-197m	3.6E+00	3.6E+03	3.6E+06
Pu-236	7.0E−06	7.0E−03	7.0E+00
Pu-237	2.3E−02	2.3E+01	2.3E+04
Pu-238	2.7E−06	2.7E−03	2.7E+00
Pu-239	2.5E−06	2.5E−03	2.5E+00
Pu-240	2.5E−06	2.5E−03	2.5E+00
Pu-241	1.3E−04	1.3E−01	1.3E+02
Pu-242	2.5E−06	2.5E−03	2.5E+00
Pu-243	3.8E+00	3.8E+03	3.8E+06
Pu-244	2.4E−06	2.4E−03	2.4E+00
Pu-245	2.1E−01	2.1E+02	2.1E+05
Pu-246	4.8E−03	4.8E+00	4.8E+03
Ra-223	1.3E−04	1.3E−01	1.3E+02
Ra-224	3.2E−04	3.2E−01	3.2E+02
Ra-225	1.3E−04	1.3E−01	1.3E+02
Ra-226	5.5E−06	5.5E−03	5.5E+00
Ra-228	1.3E−05	1.3E−02	1.3E+01
Rb-81	4.2E−01	4.2E+02	4.2E+05

Rb-83	1.4E−03	1.4E+00	1.4E+03
Rb-84	2.0E−03	2.0E+00	2.0E+03
Rb-86	1.7E−02	1.7E+01	1.7E+04
Rb-87	1.0E−02	1.0E+01	1.0E+04
Rb-88	1.7E+00	1.7E+03	1.7E+06
Rb-89	6.4E−01	6.4E+02	6.4E+05
Re−184	1.8E−03	1.8E+00	1.8E+03
Re-184m	3.6E−04	3.6E−01	3.6E+02
Re-186	1.9E−01	1.9E+02	1.9E+05
Re-187	9.3E+00	9.3E+03	9.3E+06
Re-188	3.7E−01	3.7E+02	3.7E+05
Rh-103m	1.7E+02	1.7E+05	1.7E+08
Rh-105	3.4E−01	3.4E+02	3.4E+05
Ru-97	8.3E−02	8.3E+01	8.3E+04
Ru-103	3.1E−03	3.1E+00	3.1E+03
Ru-105	2.9E−01	2.9E+02	2.9E+05
Ru-106	5.9E−04	5.9E−01	5.9E+02
S-35	7.5E−02	7.5E+01	7.5E+04
Sb-117	2.0E+00	2.0E+03	2.0E+06
Sb-122	3.9E−02	3.9E+01	3.9E+04
Sb-124	6.0E−04	6.0E−01	6.0E+02
Sb-125	1.4E−04	1.4E−01	1.4E+02
Sb-126	1.8E−03	1.8E+00	1.8E+03
Sb-126m	7.6E−01	7.6E+02	7.6E+05
Sb-127	2.0E−02	2.0E+01	2.0E+04
Sb-129	1.8E−01	1.8E+02	1.8E+05
Sc-44	1.4E−01	1.4E+02	1.4E+05
Sc-46	4.0E−04	4.0E−01	4.0E+02
Sc-47	1.1E−01	1.1E+02	1.1E+05
Sc-48	1.1E−02	1.1E+01	1.1E+04
Sc-49	1.0E+01	1.0E+04	1.0E+07

Se-73	1.6E−01	1.6E+02	1.6E+05
Se-75	1.1E−03	1.1E+00	1.1E+03
Se-79	6.9E−03	6.9E+00	6.9E+03
Si-31	4.7E+00	4.7E+03	4.7E+06
Si-32	7.2E−04	7.2E−01	7.2E+02
Sm-147	1.4E−05	1.4E−02	1.4E+01
Sm-151	3.5E−02	3.5E+01	3.5E+04
Sm-153	2.4E−01	2.4E+02	2.4E+05
Sn-113	1.9E−03	1.9E+00	1.9E+03
Sn-117m	2.3E−02	2.3E+01	2.3E+04
Sn-119m	2.8E−02	2.8E+01	2.8E+04
Sn-123	1.8E−02	1.8E+01	1.8E+04
Sn-125	7.2E−03	7.2E+00	7.2E+03
Sn-126	4.7E−06	4.7E−03	4.7E+00
Sr-82	1.9E−03	1.9E+00	1.9E+03
Sr-85	1.9E−03	1.9E+00	1.9E+03
Sr-85m	1.5E+00	1.5E+03	1.5E+06
Sr-87m	1.2E+00	1.2E+03	1.2E+06
Sr-89	2.1E−02	2.1E+01	2.1E+04
Sr-90	5.2E−04	5.2E−01	5.2E+02
Sr-91	1.2E−01	1.2E+02	1.2E+05
Sr-92	2.5E−01	2.5E+02	2.5E+05
Ta-182	4.4E−04	4.4E−01	4.4E+02
Tb-157	2.2E−03	2.2E+00	2.2E+03
Tb-160	8.4E−04	8.4E−01	8.4E+02
Tc-95	9.0E−02	9.0E+01	9.0E+04
Tc-95m	1.4E−03	1.4E+00	1.4E+03
Tc-96	5.6E−03	5.6E+00	5.6E+03
Tc-96m	7.0E−01	7.0E+02	7.0E+05
Tc-97	1.5E−03	1.5E+00	1.5E+03
Tc-97m	7.2E−02	7.2E+01	7.2E+04

Tc-98	6.4E−06	6.4E−03	6.4E+00
Tc-99	9.0E−03	9.0E+00	9.0E+03
Tc-99m	1.4E+00	1.4E+03	1.4E+06
Tc-101	3.8E+00	3.8E+03	3.8E+06
Te-121	6.0E−03	6.0E+00	6.0E+03
Te-121m	5.3E−04	5.3E−01	5.3E+02
Te-123	1.2E−03	1.2E+00	1.2E+03
Te-123m	2.7E−03	2.7E+00	2.7E+03
Te-125m	1.5E−02	1.5E+01	1.5E+04
Te-127	2.9E+00	2.9E+03	2.9E+06
Te-127m	7.3E−03	7.3E+00	7.3E+03
Te-129	6.5E+00	6.5E+03	6.5E+06
Te-129m	6.1E−03	6.1E+00	6.1E+03
Te-131	9.4E−01	9.4E+02	9.4E+05
Te-131m	1.8E−02	1.8E+01	1.8E+04
Te-132	6.2E−03	6.2E+00	6.2E+03
Te-133	1.2E+00	1.2E+03	1.2E+06
Te-133m	2.9E−01	2.9E+02	2.9E+05
Te-134	4.4E−01	4.4E+02	4.4E+05
Th-226	3.0E−02	3.0E+01	3.0E+04
Th-227	6.4E−05	6.4E−02	6.4E+01
Th-228	2.9E−06	2.9E−03	2.9E+00
Th-229	4.9E−07	4.9E−04	4.9E−01
Th-230	3.2E−06	3.2E−03	3.2E+00
Th-231	8.4E−01	8.4E+02	8.4E+05
Th-232	6.0E−07	6.0E−04	6.0E−01
Th-234	2.0E−02	2.0E+01	2.0E+04
Ti-44	5.2E−06	5.2E−03	5.2E+00
Ti-45	4.0E−01	4.0E+02	4.0E+05
Tl-200	4.4E−02	4.4E+01	4.4E+04
Tl-201	1.8E−01	1.8E+02	1.8E+05

Tl-202	1.0E−02	1.0E+01	1.0E+04
Tl-204	2.5E−02	2.5E+01	2.5E+04
Tm-170	2.4E−02	2.4E+01	2.4E+04
Tm-171	5.9E−02	5.9E+01	5.9E+04
U-230	5.0E−05	5.0E−02	5.0E+01
U-231	1.4E−01	1.4E+02	1.4E+05
U-232	1.3E−06	1.3E−03	1.3E+00
U-233	7.6E−06	7.6E−03	7.6E+00
U-234	7.6E−06	7.6E−03	7.6E+00
U-235	7.0E−06	7.0E−03	7.0E+00
U-236	8.4E−06	8.4E−03	8.4E+00
U-237	4.7E−02	4.7E+01	4.7E+04
U-238	8.6E−06	8.6E−03	8.6E+00
U-239	8.3E+00	8.3E+03	8.3E+06
U-240	1.8E−01	1.8E+02	1.8E+05
V-48	1.4E−03	1.4E+00	1.4E+03
V-49	1.3E+00	1.3E+03	1.3E+06
W-181	1.1E−02	1.1E+01	1.1E+04
W-185	1.6E−01	1.6E+02	1.6E+05
W-187	1.1E−01	1.1E+02	1.1E+05
W-188	1.0E−02	1.0E+01	1.0E+04
Xe-122	7.6E−02	7.6E+01	7.6E+04
Xe-123	1.6E+00	1.6E+03	1.6E+06
Xe-125	6.0E−01		
Xe-127	7.0E+00		
Xe-129m	7.6E+01		
Xe-131m	2.2E+02		
Xe-133	5.2E+01		
Xe-133m	6.0E+01		
Xe-135	7.6E+00		

Xe-135m	4.2E+00		
Xe-138	9.9E−01		
Y-86	2.8E−02	2.8E+01	2.8E+04
Y-87	2.3E−02	2.3E+01	2.3E+04
Y-88	2.5E−04	2.5E−01	2.5E+02
Y-90	1.1E−01	1.1E+02	1.1E+05
Y-90m	4.3E−01	4.3E+02	4.3E+05
Y-91	1.8E−02	1.8E+01	1.8E+04
Y-91m	1.6E+00	1.6E+03	1.6E+06
Y-92	7.0E−01	7.0E+02	7.0E+05
Y-93	3.8E−01	3.8E+02	3.8E+05
Yb-169	5.5E−03	5.5E+00	5.5E+03
Yb-175	2.1E−01	2.1E+02	2.1E+05
Zn-62	8.6E−02	8.6E+01	8.6E+04
Zn-65	4.4E−04	4.4E−01	4.4E+02
Zn-69	2.7E+01	2.7E+04	2.7E+07
Zn-69m	2.0E−01	2.0E+02	2.0E+05
Zr-86	2.4E−02	2.4E+01	2.4E+04
Zr-88	2.7E−04	2.7E−01	2.7E+02
Zr-89	1.6E−02	1.6E+01	1.6E+04
Zr-93	2.8E−03	2.8E+00	2.8E+03
Zr-95	6.4E−04	6.4E−01	6.4E+02
Zr-97	4.6E−02	4.6E+01	4.6E+04

*Radionuclides boiling at 100°C or less, or exposed to a temperature of 100°C, must be considered a gas. Capsules containing radionuclides in liquid or powder form can be considered to be solids.

**Mo-99 contained in a generator to produce Technetium-99 can be assumed to be a solid.

3. Table of Concentration Levels

(a) Table 2 may be used for determining if facilities are in compliance with the standard.

1. The concentration table as applied to emission estimates can only be used if all releases are from point sources and concentrations have been measured at the stack or vent using EPA-approved methods, and the distance between each stack or vent and the nearest resident is greater than 3 times the diameter of the

stack or vent. Procedures provided in Ref. (1) shall be used to determine compliance or exemption from reporting by use of Table 2.

2. The concentration table may be used to determine compliance with the standard based on environmental measurements provided these measurements are made in conformance with the requirements of §61.107(b)(5).

4. NCRP Screening Model

The procedures described in Reference (4) may be used to determine doses to members of the general public from emissions of radionuclides to the atmosphere. Both the total dose from all radionuclides emitted, and the dose caused by radioactive iodine must be considered in accordance with the procedures in Ref. (1).

5. The COMPLY Computer Code

The COMPLY computer code may be used to determine compliance with subpart I. The compliance model in the COMPLY computer code may be used to determine the dose to members of the general public from emissions of radionuclides to the atmosphere. The EPA may add radionuclides to all or any part of COMPLY to cover radionuclides that may be used by the regulated community.

Table 2—Concentration Levels for Environmental Compliance

Radionuclide	Concentration (Ci/m^3)	Radionuclide	Concentration (Ci/m^3)
Ac-225	9.1E−14	Bi-207	1.0E−14
Ac-227	1.6E−16	Bi-210	2.9E−13
Ac-228	3.7E−12	Bi-212	5.6E−11
Ag-106	1.9E−09	Bi-213	7.1E−11
Ag-106m	1.2E−12	Bi-214	1.4E−10
Ag-108m	7.1E−15	Bk-249	5.6E−13
Ag-110m	9.1E−14	Bk-250	9.1E−11
Ag-111	2.5E−12	Br-77	4.2E−11
Al-26	4.8E−15	Br-80	1.4E−08
Am-241	1.9E−15	Br-80m	1.8E−09
Am-242	1.5E−11	Br-82	1.2E−11
Am-242m	2.0E−15	Br-83	1.2E−08
Am-243	1.8E−15	Br-84	6.7E−10
Am-244	4.0E−11	C-11	1.5E−09
Am-245	8.3E−09	C-14	1.0E−11
Am-246	1.2E−09	Ca-41	4.2E−13
Ar-37	1.6E−03	Ca-45	1.3E−12
Ar-41	1.7E−09	Ca-47	2.4E−12
As-72	2.4E−11	Cd-109	5.9E−13

As-73	1.1E−11	Cd-113	9.1E−15
As-74	2.2E−12	Cd-113m	1.7E−14
As-76	5.0E−11	Cd-115	1.6E−11
As-77	1.6E−10	Cd-115m	8.3E−13
At-211	1.1E−11	Cd-117	6.7E−11
Au-193	3.8E−10	Cd-117m	1.6E−10
Au-194	3.2E−11	Ce-139	2.6E−12
Au-195	3.1E−12	Ce-141	6.3E−12
Au-198	2.1E−11	Ce-143	3.0E−11
Au-199	4.8E−11	Ce-144	6.2E−13
Ba-131	7.1E−12	Cf-248	1.8E−14
Ba-133	5.9E−14	Cf-249	1.4E−15
Ba-133m	5.9E−11	Cf-250	3.2E−15
Ba-135m	1.8E−10	Cf-251	1.4E−15
Ba-139	5.6E−09	Cf-252	5.6E−15
Ba-140	1.3E−12	Cf-253	3.1E−13
Ba-141	1.4E−09	Cf-254	3.0E−15
Ba-142	1.3E−09	Cl-36	2.7E−15
Be-7	2.3E−11	Cl-38	7.7E−10
Be-10	1.6E−12	Cm-242	5.3E−14
Bi-206	2.3E−12	Cm-243	2.6E−15
Cm-244	3.3E−15	Eu-156	1.9E−12
Cm-245	1.8E−15	F-18	6.7E−10
Cm-246	1.9E−15	Fe-52	5.6E−11
Cm-247	1.9E−15	Fe-55	9.1E−12
Cm-248	5.0E−16	Fe-59	6.7E−13
Cm-249	3.7E−09	Fm-254	2.0E−11
Cm-250	9.1E−17	Fm-255	4.3E−12
Co-56	1.8E−13	Fr-223	3.3E−11
Co-57	1.3E−12	Ga-66	6.2E−11
Co-58	6.7E−13	Ga-67	7.1E−11
Co-58m	1.2E−10	Ga-68	9.1E−10
Co-60	1.7E−14	Ga-72	3.8E−11

Co-60m	.4.3E−09	Gd-152	5.0E−15
Co-61	4.5E−09	Gd-153	2.1E−12
Cr-49	1.1E−09	Gd-159	2.9E−10
Cr-51	3.1E−11	Ge-68	2.0E−13
Cs-129	1.4E−10	Ge-71	2.4E−10
Cs-131	3.3E−11	Ge-77	1.0E−10
Cs-132	4.8E−12	H-3	1.5E−09
Cs-134	2.7E−14	Hf-181	1.9E−12
Cs-134m	1.7E−10	Hg-193m	1.0E−10
Cs-135	4.0E−13	Hg-197	8.3E−11
Cs-136	5.3E−13	Hg-197m	1.1E−10
Cs-137	1.9E−14	Hg-203	1.0E−12
Cs-138	5.3E−10	Ho-166	7.1E−11
Cu-61	4.8E−10	Ho-166m	7.1E−15
Cu-64	5.3E−10	I-123	4.3E−10
Cu-67	5.0E−11	I-124	6.2E−13
Dy-157	5.0E−10	I-125	1.2E−13
Dy-165	6.7E−09	I-126	1.1E−13
Dy-166	1.1E−11	I-128	1.1E−08
Er-169	2.9E−11	I-129	9.1E−15
Er-171	4.0E−10	I-130	4.5E−11
Es-253	2.4E−13	I-131	2.1E−13
Es-254	2.0E−14	I-132	2.3E−10
Es-254m	1.8E−12	I-133	2.0E−11
Eu-152	2.0E−14	I-134	3.8E−10
Eu-152m	3.6E−10	I-135	1.2E−10
Eu-154	2.3E−14	In-111	3.6E−11
Eu-155	5.9E−13	In-113m	2.5E−09
In-114m	9.1E−13	Nb-95	2.2E−12
In-115	7.1E−14	Nb-95m	1.4E−11
In-115m	1.6E−09	Nb-96	2.4E−11
In-116m	4.2E−10	Nb-97	1.2E−09
In-117	1.6E−09	Nd-147	7.7E−12

In-117m	9.1E−11	Nd-149	7.1E−10
Ir-190	2.6E−12	Ni-56	1.7E−12
Ir-192	9.1E−13	Ni-57	1.8E−11
Ir-194	1.1E−10	Ni-59	1.5E−11
Ir-194m	1.7E−13	Ni-63	1.4E−11
K-40	2.7E−14	Ni-65	8.3E−10
K-42	2.6E−10	Np-235	2.5E−11
K-43	6.2E−11	Np-237	1.2E−15
K-44	5.9E−10	Np-238	1.4E−11
Kr-79	8.3E−09	Np-239	3.8E−11
Kr-81	2.1E−07	Np-240	7.7E−10
Kr-83m	2.3E−05	Np-240m	5.6E−09
Kr-85	1.0E−06	Os-185	1.0E−12
Kr-85m	1.3E−08	Os-191m	2.9E−10
Kr-87	2.4E−09	Os-191	1.1E−11
Kr-88	5.0E−10	Os-193	9.1E−11
La-140	1.2E−11	P-32	3.3E−13
La-141	7.7E−10	P-33	2.4E−12
La-142	2.7E−10	Pa-230	3.2E−13
Lu-177	2.4E−11	Pa-231	5.9E−16
Lu-177m	3.6E−13	Pa-233	4.8E−12
Mg-28	1.5E−11	Pa-234	1.1E−10
Mn-52	2.8E−12	Pb-203	6.2E−11
Mn-52m	6.2E−10	Pb-205	5.6E−12
Mn-53	1.5E−11	Pb-209	1.3E−08
Mn-54	2.8E−13	Pb-2I0	2.8E−15
Mn-56	2.9E−10	Pb-211	1.4E−10
Mo-93	1.1E−12	Pb-212	6.3E−12
Mo-99	1.4E−11	Pb-214	1.2E−10
Mo-101	1.0E−09	Pd-103	3.8E−11
Na-22	2.6E−14	Pd-107	3.1E−11
Na-24	2.6E−11	Pd-109	4.8E−10
Nb-90	2.6E−11	Pm-143	9.1E−13

Nb-93m	1.0E−11	Pm-144	1.3E−13
Nb-94	7.1E−15	Pm-145	6.2E−13
Pm-146	5.3E−14	Re-184m	3.7E−13
Pm-147	1.1E−11	Re-186	1.8E−11
Pm-148	5.0E−12	Re-187	2.6E−10
Pm-148m	6.7E−13	Re-188	1.7E−10
Pm-149	4.2E−11	Rh-103m	2.1E−07
Pm-151	7.1E−11	Rh-105	1.3E−10
Po-210	7.1E−15	Ru-97	6.7E−11
Pr-142	1.1E−10	Ru-103	2.6E−12
Pr-143	7.1E−12	Ru-105	2.8E−10
Pr-144	1.8E−08	Ru-106	3.4E−13
Pt-191	4.3E−11	S-35	1.3E−12
Pt-193	1.8E−11	Sb-117	2.4E−09
Pt-193m	4.8E−11	Sb-122	1.4E−11
Pt-195m	3.2E−11	Sb-124	5.3E−13
Pt-197	4.0E−10	Sb-125	1.6E−13
Pt-197m	2.6E−09	Sb-126	1.4E−12
Pu-236	5.9E−15	Sb-126m	9.1E−10
Pu-237	1.9E−11	Sb-127	7.1E−12
Pu-238	2.1E−15	Sb-129	7.7E−11
Pu-239	2.0E−15	Sc-44	1.7E−10
Pu-240	2.0E−15	Sc-46	4.2E−13
Pu-241	1.0E−13	Sc-47	3.8E−11
Pu-242	2.0E−15	Sc-48	9.1E−12
Pu-243	4.2E−09	Sc-49	1.2E−08
Pu-244	2.0E−15	Se-73	1.7E−10
Pu-245	2.1E−10	Se-75	1.7E−13
Pu-246	2.2E−12	Se-79	1.1E−13
Ra-223	4.2E−14	Si-31	5.6E−09
Ra-224	1.5E−13	Si-32	3.4E−14
Ra-225	5.0E−14	Sm-147	1.4E−14
Ra-226	3.3E−15	Sm-151	2.1E−11

Ra-228	5.9E−15	Sm-153	5.9E−11
Rb-81	5.0E−10	Sn-113	1.4E−12
Rb-83	3.4E−13	Sn-117m	5.6E−12
Rb-84	3.6E−13	Sn-119m	5.3E−12
Rb-86	5.6E−13	Sn-123	1.1E−12
Rb-87	1.6E−13	Sn-125	1.7E−12
Rb-88	2.1E−09	Sn-126	5.3E−15
Rb-89	7.1E−10	Sr-82	6.2E−13
Re-184	1.5E−12	Sr-85	1.8E−12
Sr-85m	1.6E−09	Th-232	6.2E−16
Sr-87m	1.4E−09	Th-234	2.2E−12
Sr-89	1.8E−12	Ti-44	6.2E−15
Sr-90	1.9E−14	Ti-45	4.8E−10
Sr-91	9.1E−11	Tl-200	4.5E−11
Sr-92	2.9E−10	Tl-201	1.0E−10
Ta-182	4.5E−13	Tl-202	5.0E−12
Tb-157	2.5E−12	Tl-204	1.2E−12
Tb-160	7.7E−13	Tm-170	3.3E−12
Tc-95	1.0E−10	Tm-171	2.6E−11
Tc-95m	1.4E−12	U-230	1.5E−14
Tc-96	5.6E−12	U-231	4.2E−11
Tc-96m	6.7E−10	U-232	1.3E−15
Tc-97	.7.1E−13	U-233	7.1E−15
Tc-97m	7.1E−12	U-234	7.7E−15
Tc-98	6.7E−15	U-235	7.1E−15
Tc-99	1.4E−13	U-236	7.7E−15
Tc-99m	1.7E−09	U-237	1.0E−11
Tc-101	4.5E−09	U-238	8.3E−15
Te-121	1.0E−12	U-239	4.3E−09
Te-121m	1.2E−13	U-240	1.3E−10
Te-123	1.4E−13	V-48	1.0E−12
Te-123m	2.0E−13	V-49	1.6E−10
Te-125m	3.6E−13	W-181	6.7E−12

Te-127	1.0E−09	W-185	2.6E−12
Te-127m	1.5E−13	W-187	7.7E−11
Te-129	7.7E−09	W-188	5.3E−13
Te-129m	1.4E−13	Xe-122	9.1E−11
Te-131	9.1E−11	Xe-123	1.6E−09
Te-131m	1.0E−12	Xe-125	1.1E−11
Te-132	7.1E−13	Xe-127	8.3E−09
Te-133	9.1E−10	Xe-129m	9.1E−08
Te-133m	2.2E−10	Xe-131m	2.6E−07
Te-134	5.3E−10	Xe-133	6.2E−08
Th-226	3.4E−11	Xe-133m	7.1E−08
Th-227	3.8E−14	Xe-135	9.1E−09
Th-228	3.1E−15	Xe-135m	5.0E−09
Th-229	5.3E−16	Xe-138	1.2E−09
Th-230	3.4E−15	Y-86	3.0E−11
Th-231	2.9E−10	Y-87	1.7E−11
Y-88	2.7E−13	Zn-65	9.1E−14
Y-90	1.3E−11	Zn-69	3.2E−08
Y-90m	1.9E−10	Zn-69m	1.7E−10
Y-91	2.1E−12	Zr-86	2.4E−11
Y-91m	1.3E−09	Zr-88	3.1E−13
Y-92	8.3E−10	Zr-89	1.3E−11
Y-93	2.9E−10	Zr-93	2.6E−12
Yb-169	3.7E−12	Zr-95	6.7E−13
Yb-175	4.3E−11	Zr-97	3.8E−11
Zn-62	9.1E−11		

6. References

(1) Environmental Protection Agency, “A Guide for Determining Compliance with the Clean Air Act Standards for Radionuclides Emissions from NRC-Licensed and Non-DOE Federal Facilities”, EPA 520/1–89–002, October 1989.

(2) Environmental Protection Agency, “User's Guide for the COMPLY Code”, EPA 520/1–89–003, October 1989.

(3) Environmental Protection Agency, “Background Information Document: Procedures Approved for Demonstrating Compliance with 40 CFR Part 61, Subpart I”, EPA 520/1–89–001, January 1989.

(4) National Council on Radiation Protection and Measurement, “Screening Techniques for Determining Compliance with Environmental Standards” NCRP Commentary No. 3, Revision of January 1989 with addendum of October, 1989.

[54 FR 51711, Dec. 15, 1989]

PART 70 OPERATING PERMIT
OFFICE OF AIR QUALITY

Countrymark Cooperative, LLP
1200 Refinery Road
Mount Vernon, Indiana 47620

Attachment B

Title 40: Protection of Environment

PART 60—STANDARDS OF PERFORMANCE FOR NEW STATIONARY SOURCES

Subpart GGGa—Standards of Performance for Equipment Leaks of VOC in Petroleum Refineries for Which Construction, Reconstruction, or Modification Commenced After November 7, 2006

MSM 129-26889-00003

SPM 129-26980-00003

Title 40: Protection of Environment

PART 60—STANDARDS OF PERFORMANCE FOR NEW STATIONARY SOURCES

Browse Previous | Browse Next

Subpart GGGa—Standards of Performance for Equipment Leaks of VOC in Petroleum Refineries for Which Construction, Reconstruction, or Modification Commenced After November 7, 2006

Source: 72 FR 64896, Nov. 16, 2007, unless otherwise noted.

§ 60.590a Applicability and designation of affected facility.

(a)(1) The provisions of this subpart apply to affected facilities in petroleum refineries.

(2) A compressor is an affected facility.

(3) The group of all the equipment (defined in §60.591a) within a process unit is an affected facility.

(b) Any affected facility under paragraph (a) of this section that commences construction, reconstruction, or modification after November 7, 2006, is subject to the requirements of this subpart.

(c) Addition or replacement of equipment (defined in §60.591a) for the purpose of process improvement which is accomplished without a capital expenditure shall not by itself be considered a modification under this subpart.

(d) Facilities subject to subpart VV, subpart VVa, subpart GGG, or subpart KKK of this part are excluded from this subpart.

(e) *Stay of standards.* Owners or operators are not required to comply with the definition of “process unit” in §60.590 of this subpart until the EPA takes final action to require compliance and publishes a document in theFederal Register.While the definition of “process unit” is stayed, owners or operators should use the following definition:

Process unit means components assembled to produce intermediate or final products from petroleum, unfinished petroleum derivatives, or other intermediates; a process unit can operate independently if supplied with sufficient feed or raw materials and sufficient storage facilities for the product.

[49 FR 22606, May 30, 1984, as amended at 73 FR 31376, June 2, 2008]

§ 60.591a Definitions.

As used in this subpart, all terms not defined herein shall have the meaning given them in the Clean Air Act, in subpart A of part 60, or in subpart VVa of this part, and the following terms shall have the specific meanings given them.

Alaskan North Slope means the approximately 69,000 square mile area extending from the Brooks Range to the Arctic Ocean.

Asphalt (also known as Bitumen) is a black or dark brown solid or semi-solid thermo-plastic material possessing waterproofing and adhesive properties. It is a complex combination of higher molecular weight organic compounds containing a relatively high proportion of hydrocarbons having carbon numbers greater than C25 with a high carbon to hydrogen ratio. It is essentially non-volatile at ambient temperatures with closed cup flash point of 445 °F (230 °C) or greater.

Equipment means each valve, pump, pressure relief device, sampling connection system, open-ended valve or line, and flange or other connector in VOC service. For the purposes of recordkeeping and reporting only, compressors are considered equipment.

In hydrogen service means that a compressor contains a process fluid that meets the conditions specified in §60.593a(b).

In light liquid service means that the piece of equipment contains a liquid that meets the conditions specified in §60.593a(c).

Petroleum means the crude oil removed from the earth and the oils derived from tar sands, shale, and coal.

Petroleum refinery means any facility engaged in producing gasoline, kerosene, distillate fuel oils, residual fuel oils, lubricants, or other products through the distillation of petroleum, or through the redistillation, cracking, or reforming of unfinished petroleum derivatives.

Process unit means the components assembled and connected by pipes or ducts to process raw materials and to produce intermediate or final products from petroleum, unfinished petroleum derivatives, or other intermediates. A process unit can operate independently if supplied with sufficient feed or raw materials and sufficient storage facilities for the product. For the purpose of this subpart, process unit includes any feed, intermediate and final product storage vessels (except as specified in §60.482–1a(g)), product transfer racks, and connected ducts and piping. A process unit includes all equipment as defined in this subpart.

Effective Date Note: At 73 FR 31376, June 2, 2008, §60.591a, the definition of “process unit” was stayed until further notice.

§ 60.592a Standards.

(a) Each owner or operator subject to the provisions of this subpart shall comply with the requirements of §§60.482–1a to 60.482–10a as soon as practicable, but no later than 180 days after initial startup.

(b) For a given process unit, an owner or operator may elect to comply with the requirements of paragraphs (b)(1), (2), or (3) of this section as an alternative to the requirements in §60.482–7a.

(1) Comply with §60.483–1a.

(2) Comply with §60.483–2a.

(3) Comply with the Phase III provisions in §63.168, except an owner or operator may elect to follow the provisions in §60.482–7a(f) instead of §63.168 for any valve that is designated as being leakless.

(c) An owner or operator may apply to the Administrator for a determination of equivalency for any means of emission limitation that achieves a reduction in emissions of VOC at least equivalent to the reduction in emissions of VOC achieved by the controls required in this subpart. In doing so, the owner or operator shall comply with requirements of §60.484a.

(d) Each owner or operator subject to the provisions of this subpart shall comply with the provisions of §60.485a except as provided in §60.593a.

(e) Each owner or operator subject to the provisions of this subpart shall comply with the provisions of §§60.486a and 60.487a.

§ 60.593a Exceptions.

(a) Each owner or operator subject to the provisions of this subpart may comply with the following exceptions to the provisions of subpart VVa of this part.

(b)(1) Compressors in hydrogen service are exempt from the requirements of §60.592a if an owner or operator demonstrates that a compressor is in hydrogen service.

(2) Each compressor is presumed not to be in hydrogen service unless an owner or operator demonstrates that the piece of equipment is in hydrogen service. For a piece of equipment to be considered in hydrogen service, it must be determined that the percent hydrogen content can be reasonably expected always to exceed 50 percent by volume. For purposes of determining the percent hydrogen content in the process fluid that is contained in or contacts a compressor, procedures that conform to the general method described in ASTM E260–73, 91, or 96, E168–67, 77, or 92, or E169–63, 77, or 93 (incorporated by reference as specified in §60.17) shall be used.

(3)(i) An owner or operator may use engineering judgment rather than procedures in paragraph (b)(2) of this section to demonstrate that the percent content exceeds 50 percent by volume, provided the engineering judgment demonstrates that the content clearly exceeds 50 percent by volume. When an owner or operator and the Administrator do not agree on whether a piece of equipment is in hydrogen service, however, the procedures in paragraph (b)(2) of this section shall be used to resolve the disagreement.

(ii) If an owner or operator determines that a piece of equipment is in hydrogen service, the determination can be revised only after following the procedures in paragraph (b)(2).

(c) Any existing reciprocating compressor that becomes an affected facility under provisions of §60.14 or §60.15 is exempt from §60.482–3a(a), (b), (c), (d), (e), and (h) provided the owner or operator demonstrates that recasting the distance piece or replacing the compressor are the only options available to bring the compressor into compliance with the provisions of §60.482–3a(a), (b), (c), (d), (e), and (h).

(d) An owner or operator may use the following provision in addition to §60.485a(e): Equipment is in light liquid service if the percent evaporated is greater than 10 percent at 150 °C as determined by ASTM Method D86–78, 82, 90, 93, 95, or 96 (incorporated by reference as specified in §60.17).

(e) Pumps in light liquid service and valves in gas/vapor and light liquid service within a process unit that is located in the Alaskan North Slope are exempt from the requirements of §§60.482–2a and 60.482–7a.

(f) Open-ended valves or lines containing asphalt as defined in §60.591a are exempt from the requirements of §60.482–6a(a) through (c).

(g) Connectors in gas/vapor or light liquid service are exempt from the requirements in §60.482–11a, provided the owner or operator complies with §60.482–8a for all connectors, not just those in heavy liquid service.

PART 70 OPERATING PERMIT
OFFICE OF AIR QUALITY

Countrymark Cooperative, LLP
1200 Refinery Road
Mount Vernon, Indiana 47620

Attachment C

Title 40: Protection of Environment

PART 60—STANDARDS OF PERFORMANCE FOR NEW STATIONARY SOURCES

Subpart Ja—Standards of Performance for Petroleum Refineries for Which Construction, Reconstruction, or Modification Commenced After May 14, 2007

MSM 129-26889-00003

SPM 129-26980-00003

Title 40: Protection of Environment

PART 60—STANDARDS OF PERFORMANCE FOR NEW STATIONARY SOURCES

Browse Previous | Browse Next

Subpart Ja—Standards of Performance for Petroleum Refineries for Which Construction, Reconstruction, or Modification Commenced After May 14, 2007

Source: 73 FR 35867, June 24, 2008, unless otherwise noted.

Effective Date Note: At 73 FR 43627, July 28, 2008, subpart Ja was stayed until Sept. 26, 2008.

§ 60.100a Applicability, designation of affected facility, and reconstruction.

(a) The provisions of this subpart apply to the following affected facilities in petroleum refineries: fluid catalytic cracking units (FCCU), fluid coking units (FCU), delayed coking units, fuel gas combustion devices, including flares and process heaters, and sulfur recovery plants. The sulfur recovery plant need not be physically located within the boundaries of a petroleum refinery to be an affected facility, provided it processes gases produced within a petroleum refinery.

(b) Except for flares, the provisions of this subpart apply only to affected facilities under paragraph (a) of this section which commence construction, modification, or reconstruction after May 14, 2007. For flares, the provisions of this subpart apply only to flares which commence construction, modification, or reconstruction, after June 24, 2008.

(c) For the purposes of this subpart, under §60.14, a modification to a flare occurs if:

(1) Any new piping from a refinery process unit or fuel gas system is physically connected to the flare (e.g., for direct emergency relief or some form of continuous or intermittent venting); or

(2) A flare is physically altered to increase the flow capacity of the flare.

(d) For purposes of this subpart, under §60.15, the “fixed capital cost of the new components” includes the fixed capital cost of all depreciable components which are or will be replaced pursuant to all continuous programs of component replacement which are commenced within any 2-year period following May 14, 2007. For purposes of this paragraph, “commenced” means that an owner or operator has undertaken a continuous program of component replacement or that an owner or operator has entered into a contractual obligation to undertake and complete, within a reasonable time, a continuous program of component replacement.

§ 60.101a Definitions.

Terms used in this subpart are defined in the Clean Air Act, in §60.2, and in this section.

Coke burn-off means the coke removed from the surface of the FCCU catalyst by combustion in the catalyst regenerator. The rate of coke burn-off is calculated by the formula specified in §60.104a.

Contact material means any substance formulated to remove metals, sulfur, nitrogen, or any other contaminant from petroleum derivatives.

Delayed coking unit means one or more refinery process units in which high molecular weight petroleum derivatives are thermally cracked and petroleum coke is produced in a series of closed, batch system reactors.

Flare means an open-flame fuel gas combustion device used for burning off unwanted gas or flammable gas and liquids. The flare includes the foundation, flare tip, structural support, burner, igniter, flare controls including air injection or steam injection systems, flame arrestors, knockout pots, piping and header systems.

Flexicoking unit means one or more refinery process units in which high molecular weight petroleum derivatives are thermally cracked and petroleum coke is continuously produced and then gasified to produce a synthetic fuel gas.

Fluid catalytic cracking unit means a refinery process unit in which petroleum derivatives are continuously charged and hydrocarbon molecules in the presence of a catalyst suspended in a fluidized bed are fractured into smaller molecules, or react with a contact material suspended in a fluidized bed to improve feedstock quality for additional processing and the catalyst or contact material is continuously regenerated by burning off coke and other deposits. The unit includes the riser, reactor, regenerator, air blowers, spent catalyst or contact material stripper, catalyst or contact material recovery equipment, and regenerator equipment for controlling air pollutant emissions and for heat recovery. When *fluid catalyst cracking unit* regenerator exhaust from two separate fluid catalytic cracking units share a common exhaust treatment (e.g., CO boiler or wet scrubber), the *fluid catalytic cracking unit* is a single affected facility.

Fluid coking unit means one or more refinery process units in which high molecular weight petroleum derivatives are thermally cracked and petroleum coke is continuously produced in a fluidized bed system. The *fluid coking unit* includes equipment for controlling air pollutant emissions and for heat recovery on the fluid coking burner exhaust vent.

Fuel gas means any gas which is generated at a petroleum refinery and which is combusted. *Fuel gas* includes natural gas when the natural gas is combined and combusted in any proportion with a gas generated at a refinery. *Fuel gas* does not include gases generated by catalytic cracking unit catalyst regenerators and fluid coking burners, but does include gases from flexicoking unit gasifiers. *Fuel gas* does not include vapors that are collected and combusted to comply with the wastewater provisions in §60.692, 40 CFR 61.343 through 61.348, 40 CFR 63.647, or the marine tank vessel loading provisions in 40 CFR 63.562 or 40 CFR 63.651.

Fuel gas combustion device means any equipment, such as process heaters, boilers, and flares, used to combust fuel gas, except facilities in which gases are combusted to produce sulfur or sulfuric acid.

Fuel gas system means a system of compressors, piping, knock-out pots, mix drums, and units used to remove sulfur contaminants from the fuel gas (e.g., amine scrubbers) that collects refinery fuel gas from one or more sources for treatment as necessary prior to combusting in process heaters or boilers. A *fuel gas system* may have an overpressure vent to a flare but the primary purpose for a fuel gas system is to provide fuel to the refinery.

Oxidation control system means an emission control system which reduces emissions from sulfur recovery plants by converting these emissions to sulfur dioxide (SO_2) and recycling the $SO_2$to the reactor furnace or the first-stage catalytic reactor of the Claus sulfur recovery plant or converting the $SO_2$to a sulfur product.

Petroleum means the crude oil removed from the earth and the oils derived from tar sands, shale, and coal.

Petroleum refinery means any facility engaged in producing gasoline, kerosene, distillate fuel oils, residual fuel oils, lubricants, asphalt (bitumen) or other products through distillation of petroleum or through redistillation, cracking, or reforming of unfinished petroleum derivatives.

Process heater means an enclosed combustion device used to transfer heat indirectly to process stream materials (liquids, gases, or solids) or to a heat transfer material for use in a process unit instead of steam.

Process upset gas means any gas generated by a petroleum refinery process unit as a result of upset or malfunction.

Reduced sulfur compounds means hydrogen sulfide (H_2S), carbonyl sulfide, and carbon disulfide.

Reduction control system means an emission control system which reduces emissions from sulfur recovery plants by converting these emissions to H_2S and either recycling the H_2S to the reactor furnace or the first-stage catalytic reactor of the Claus sulfur recovery plant or converting the H_2S to a sulfur product.

Refinery process unit means any segment of the petroleum refinery in which a specific processing operation is conducted.

Sulfur pit means the storage vessel in which sulfur that is condensed after each Claus catalytic reactor is initially accumulated and stored. *A sulfur pit* does not include secondary sulfur storage vessels downstream of the initial Claus reactor sulfur pits.

Sulfur recovery plant means all process units which recover sulfur from $HS_2$and/or SO_2at a petroleum refinery. The *sulfur recovery plant* also includes sulfur pits used to store the recovered sulfur product, but it does not include secondary sulfur storage vessels downstream of the sulfur pits. For example, a Claus sulfur recovery plant includes: Reactor furnace and waste heat boiler, catalytic reactors, sulfur pits, and, if present, oxidation or reduction control systems, or incinerator, thermal oxidizer, or similar combustion device. Multiple sulfur recovery units are a single affected facility only when the units share the same source of sour gas. Sulfur recovery plants that receive source gas from completely segregated sour gas treatment systems are separate affected facilities.

§ 60.102a Emissions limitations.

(a) Each owner or operator that is subject to the requirements of this subpart shall comply with the emissions limitations in paragraphs (b) through (h) of this section on and after the date on which the initial performance test, required by §60.8, is completed, but not later than 60 days after achieving the maximum production rate at which the affected facility will be operated, or 180 days after initial startup, whichever comes first.

(b) An owner or operator subject to the provisions of this subpart shall not discharge or cause the discharge into the atmosphere from any FCCU or FCU:

(1) Particulate matter (PM) in excess of the limits in paragraphs (b)(1)(i), (ii), or (iii) of this section.

(i) 1.0 kilogram per Megagram (kg/Mg)(1 pound (lb) per 1,000 lb) coke burn-off or, if a PM continuous emission monitoring system (CEMS) is used, 0.040 grain per dry standard cubic feet (gr/dscf) corrected to 0 percent excess air for each modified or reconstructed FCCU.

(ii) 0.5 gram per kilogram (g/kg) coke burn-off (0.5 lb PM/1,000 lb coke burn-off) or, if a PM CEMS is used, 0.020 gr/dscf corrected to 0 percent excess air for each newly constructed FCCU.

(iii) 1.0 kg/Mg (1 lb/1,000 lb) coke burn-off; or if a PM CEMS is used, 0.040 grain per dry standard cubic feet (gr/dscf) corrected to 0 percent excess air for each affected FCU.

(2) Nitrogen oxides (NO_X) in excess of 80 parts per million by volume (ppmv), dry basis corrected to 0 percent excess air, on a 7-day rolling average basis.

(3) Sulfur dioxide (SO_2) in excess of 50 ppmv dry basis corrected to 0 percent excess air, on a 7-day rolling average basis and 25 ppmv, dry basis corrected to 0 percent excess air, on a 365-day rolling average basis.

(4) Carbon monoxide (CO) in excess of 500 ppmv, dry basis corrected to 0 percent excess air, on an hourly average basis.

(c) The owner or operator of a FCCU or FCU that uses a continuous parameter monitoring system (CPMS) according to §60.105a(b)(1) shall comply with the applicable control device parameter operating limit in paragraph (c)(1) or (2) of this section.

(1) If the FCCU or FCU is controlled using an electrostatic precipitator:

(i) The 3-hour rolling average total power and secondary current to the entire system must not fall below the level established during the most recent performance test; and

(ii) The daily average exhaust coke burn-off rate must not exceed the level established during the most recent performance test.

(2) If the FCCU or FCU is controlled using a wet scrubber:

(i) The 3-hour rolling average pressure drop must not fall below the level established during the most recent performance test; and

(ii) The 3-hour rolling average liquid-to-gas ratio must not fall below the level established during the most recent performance test.

(d) If an FCCU or FCU uses a continuous opacity monitoring system (COMS) according to the alternative monitoring option in §60.105a(e), the 3-hour rolling average opacity of emissions from the FCCU or FCU as measured by the COMS must not exceed the site-specific opacity limit established during the most recent performance test.

(e) The owner or operator of a FCCU or FCU that is exempted from the requirement for a CO continuous emissions monitoring system under §60.105a(h)(3) shall comply with the parameter operating limits in paragraph (e)(1) or (2) of this section.

(1) For a FCCU or FCU with no post-combustion control device:

(i) The hourly average temperature of the exhaust gases exiting the FCCU or FCU must not fall below the level established during the most recent performance test.

(ii) The hourly average oxygen (O_2) concentration of the exhaust gases exiting the FCCU or FCU must not fall below the level established during the most recent performance test.

(2) For a FCCU or FCU with a post-combustion control device:

(i) The hourly average temperature of the exhaust gas vent stream exiting the control device must not fall below the level established during the most recent performance test.

(ii) The hourly average O_2concentration of the exhaust gas vent stream exiting the control device must not fall below the level established during the most recent performance test.

(f) Except as provided in paragraph (f)(3), each owner or operator of an affected sulfur recovery plant shall comply with the applicable emission limits in paragraphs (f)(1) or (2) of this section.

(1) For a sulfur recovery plant with a capacity greater than 20 long tons per day (LTD):

(i) For a sulfur recovery plant with an oxidation control system or a reduction control system followed by incineration, the owner or operator shall not discharge or cause the discharge of any gases into the atmosphere in excess of 250 ppm by volume (dry basis) of sulfur dioxide (SO_2) at zero percent excess air. If the sulfur recovery plant consists of multiple process trains or release points the owner or operator shall comply with the 250 ppmv limit for each process train or release point or comply with a flow rate weighted average of 250 ppmv for all release points from the sulfur recovery plant; or

(ii) For sulfur recovery plant with a reduction control system not followed by incineration, the owner or operator shall not discharge or cause the discharge of any gases into the atmosphere in excess of 300 ppm

by volume of reduced sulfur compounds and 10 ppm by volume of hydrogen sulfide (HS_2), each calculated as ppm $SO_2$by volume (dry basis) at zero percent excess air; or

(iii) For systems using oxygen enrichment, the owner or operator shall calculate the applicable emission limit using Equation 1 of this section:

$$E_{LS} = k_1 \times \left(-0.038 * (\%O_2)^2 + 11.53 * \%O_2 + 25.6\right) \qquad \text{(Eq. 1)}$$

Where:

E_{LS}= Emission rate of $SO_2$for large sulfur recovery plant, ppmv;

k_1= Constant factor for emission limit conversion: k_1= 1 for converting to SO_2limit and k_1= 1.2 for converting to the reduced sulfur compounds limit; and

$\%O_2$= O_2concentration to the SRP, percent by volume (dry basis).

(2) For a sulfur recovery plant with a capacity of 20 LTD or less:

(i) For a sulfur recovery plant with an oxidation control system or a reduction control system followed by incineration, the owner or operator shall not discharge or cause the discharge of any gases into the atmosphere in excess of 2,500 ppm by volume (dry basis) of SO_2at zero percent excess air. If the sulfur recovery plant consists of multiple process trains or release points the owner or operator shall comply with the 2,500 ppmv limit for each process train or release point or comply with a flow rate weighted average of 2,500 ppmv for all release points from the sulfur recovery plant; or

(ii) For sulfur recovery plant with a reduction control system not followed by incineration, the owner or operator shall not discharge or cause the discharge of any gases into the atmosphere in excess of 3,000 ppm by volume of reduced sulfur compounds and 100 ppm by volume of hydrogen sulfide (H_2S), each calculated as ppm SO2by volume (dry basis) at zero percent excess air; or

(iii) For systems using oxygen enrichment, the owner or operator shall calculate the applicable emission limit using Equation 2 of this section:

$$E_{SS} = k_1 \times \left(-0.38 * (\%O_2)^2 + 115.3 * \%O_2 + 256\right) \qquad \text{(Eq. 2)}$$

Where:

E_{SS}= Emission rate of $SO_2$for small sulfur recovery plant, ppmv.

(3) Periods of maintenance of the sulfur pit, during which the emission limits in paragraphs (f)(1) and (2) shall not apply, shall not exceed 240 hours per year. The owner or operator must document the time periods during which the sulfur pit vents were not controlled and measures taken to minimize emissions during these periods. Examples of these measures include not adding fresh sulfur or shutting off vent fans.

(g) Each owner or operator of an affected fuel gas combustion device shall comply with the emission limits in paragraphs (g)(1) through (3) of this section.

(1) For each fuel gas combustion device, the owner or operator shall comply with either the emission limit in paragraph (g)(1)(i) of this section or the fuel gas concentration limit in paragraph (g)(1)(ii) of this section.

(i) The owner or operator shall not discharge or cause the discharge of any gases into the atmosphere that contain SO_2in excess of 20 ppmv (dry basis, corrected to 0 percent excess air) determined hourly on a 3-

hour rolling average basis and SO_2in excess of 8 ppmv (dry basis, corrected to 0 percent excess air), determined daily on a 365 successive day rolling average basis; or

(ii) The owner or operator shall not burn in any fuel gas combustion device any fuel gas that contains H_2S in excess of 162 ppmv determined hourly on a 3-hour rolling average basis and H_2S in excess of 60 ppmv determined daily on a 365 successive calendar day rolling average basis.

(2) For each process heater with a rated capacity of greater than 40 million British thermal units per hour (MMBtu/hr), the owner or operator shall not discharge to the atmosphere any emissions of NO_Xin excess of 40 ppmv (dry basis, corrected to 0 percent excess air) on a 24-hour rolling average basis.

(3) Except as provided in paragraphs (h) and (i) of this section, the owner or operator of an affected flare shall not allow flow to each affected flare during normal operations of more than 7,080 standard cubic meters per day (m^3 /day) (250,000 standard cubic feet per day (scfd)) on a 30-day rolling average. The owner or operator of a newly constructed or reconstructed flare shall comply with the emission limit in this paragraph by no later than the date that flare becomes an affected flare subject to this subpart. The owner or operator of a modified flare shall comply with the emission limit in this paragraph by no later than 1 year after that flare becomes an affected flare subject to this subpart.

(h) The combustion in a flare of process upset gases or fuel gas that is released to the flare as a result of relief valve leakage or other emergency malfunctions is exempt from paragraph (g) of this section.

(i) In periods of fuel gas imbalance that are described in the flare management plan required in section 60.103a(a), compliance with the emission limit in paragraph (g)(3) of this section is demonstrated by following the procedures and maintaining records described in the flare management plan to document the periods of excess fuel gas.

§ 60.103a Work practice standards.

(a) Each owner or operator that operates a flare that is subject to this subpart shall develop and implement a written flare management plan. The owner or operator of a newly constructed or reconstructed flare must develop and implement the flare management plan by no later than the date that flare becomes an affected flare subject to this subpart. The owner or operator of a modified flare must develop and implement the flare management plan by no later than 1 year after the flare becomes an affected flare subject to this subpart. The plan must include:

(1) A diagram illustrating all connections to the flare;

(2) Methods for monitoring flow rate to the flare, including a detailed description of the manufacturer's specifications, including but not limited to, make, model, type, range, precision, accuracy, calibration, maintenance, and quality assurance procedures for flare gas monitoring devices;

(3) Procedures to minimize discharges to the flare gas system during the planned start-up and shutdown of the refinery process units that are connected to the affected flare;

(4) Procedures to conduct a root cause analysis of any process upset or malfunction that causes a discharge to the flare in excess of 14,160 m^3 /day (500,000 scfd);

(5) Procedures to reduce flaring in cases of fuel gas imbalance (i.e., excess fuel gas for the refinery's energy needs); and

(6) Explanation of procedures to follow during times that the flare must exceed the limit in §60.102a(g)(3) (e.g., keep records of natural gas purchases to support assertion that the refinery is producing more fuel gas than needed to operate the processes).

(b) Each owner or operator that operates a fuel gas combustion device or sulfur recovery plant subject to this subpart shall conduct a root cause analysis of any emission limit exceedance or process start-up,

shutdown, upset, or malfunction that causes a discharge to the atmosphere in excess of 227 kilograms per day (kg/day) (500 lb per day (lb/day)) of SO2. For any root cause analysis performed, the owner or operator shall record the identification of the affected facility, the date and duration of the discharge, the results of the root cause analysis, and the action taken as a result of the root cause analysis. The first root cause analysis for a modified flare must be conducted no later than the first discharge that occurs after the flare has been an affected flare subject to this subpart for 1 year.

(c) Each owner or operator of a delayed coking unit shall depressure to 5 lb per square inch gauge (psig) during reactor vessel depressuring and vent the exhaust gases to the fuel gas system for combustion in a fuel gas combustion device.

§ 60.104a Performance tests.

(a) The owner or operator shall conduct a performance test for each FCCU, FCU, sulfur recovery plant, and fuel gas combustion device to demonstrate initial compliance with each applicable emissions limit in §60.102a according to the requirements of §60.8. The notification requirements of §60.8(d) apply to the initial performance test and to subsequent performance tests required by paragraph (b) of this section (or as required by the Administrator), but does not apply to performance tests conducted for the purpose of obtaining supplemental data because of continuous monitoring system breakdowns, repairs, calibration checks, and zero and span adjustments.

(b) The owner or operator of a FCCU or FCU that elects to monitor control device operating parameters according to the requirements in §60.105a(b), to use bag leak detectors according to the requirements in §60.105a(c), or to use COMS according to the requirements in §60.105a(e) shall conduct a PM performance test at least once every 12 months and furnish the Administrator a written report of the results of each test.

(c) In conducting the performance tests required by this subpart (or as requested by the Administrator), the owner or operator shall use the test methods in 40 CFR part 60, Appendices A–1 through A–8 or other methods as specified in this section, except as provided in §60.8(b).

(d) The owner or operator shall determine compliance with the PM, NOX, SO2, and CO emissions limits in §60.102a(b) for FCCU and FCU using the following methods and procedures:

(1) Method 1 of appendix A–1 to part 60 for sample and velocity traverses.

(2) Method 2 of appendix A–1 to part 60 for velocity and volumetric flow rate.

(3) Method 3, 3A, or 3B of appendix A–2 to part 60 for gas analysis. The method ANSI/ASME PTC 19.10–1981, “Flue and Exhaust Gas Analyses,” (incorporated by reference—see §60.17) is an acceptable alternative to EPA Method 3B of appendix A–2 to part 60.

(4) Method 5, 5B, or 5F of appendix A–3 to part 60 for determining PM emissions and associated moisture content from a FCCU or FCU without a wet scrubber subject to the emissions limit in §63.102a(b)(1). Use Method 5 or 5B of appendix A–3 to part 60 for determining PM emissions and associated moisture content from a FCCU or FCU with a wet scrubber subject to the emissions limit in §63.102a(b)(1).

(i) The PM performance test consists of 3 valid test runs; the duration of each test run must be no less than 60 minutes.

(ii) The emissions rate of PM (E_{PM}) is computed for each run using Equation 3 of this section:

$$E = \frac{c_s \, Q_{sd}}{K \, R_c} \qquad \text{(Eq. 3)}$$

Where:

E = Emission rate of PM, g/kg, lbs per 1,000 lbs (lb/1,000 lbs) of coke burn-off;

cs= Concentration of total PM, grams per dry standard cubic meter (g/dscm), gr/dscf;

Qsd= Volumetric flow rate of effluent gas, dry standard cubic meters per hour, dry standard cubic feet per hour;

Rc= Coke burn-off rate, kilograms per hour (kg/hr), lbs per hour (lbs/hr) coke; and

K = Conversion factor, 1.0 grams per gram (7,000 grains per lb).

(iii) The coke burn-off rate (Rc) is computed for each run using Equation 4 of this section:

$$R_c = K_1 Q_r \left(\%CO_2 + \%CO\right) + K_2 Q_a - K_3 Q_r \left(\%CO/2 + \%CO_2 + \%O_2\right) + K_3 Q_{oxy} \left(\%O_{oxy}\right) \qquad \text{(Eq. 4)}$$

Where:

Rc= Coke burn-off rate, kg/hr (lb/hr);

Qr= Volumetric flow rate of exhaust gas from FCCU regenerator or fluid coking burner before any emissions control or energy recovery system that burns auxiliary fuel, dry standard cubic meters per minute (dscm/min), dry standard cubic feet per minute (dscf/min);

Qa= Volumetric flow rate of air to FCCU regenerator or fluid coking burner, as determined from the unit's control room instrumentation, dscm/min (dscf/min);

Qoxy= Volumetric flow rate of O_2enriched air to FCCU regenerator or fluid coking unit, as determined from the unit's control room instrumentation, dscm/min (dscf/min);

%CO2= Carbon dioxide concentration in FCCU regenerator or fluid coking burner exhaust, percent by volume (dry basis);

%CO = CO concentration in FCCU regenerator or fluid coking burner exhaust, percent by volume (dry basis);

$\%O_2$= O2concentration in FCCU regenerator or fluid coking burner exhaust, percent by volume (dry basis);

%Ooxy= O2concentration in O2enriched air stream inlet to the FCCU regenerator or fluid coking burner, percent by volume (dry basis);

K1= Material balance and conversion factor, 0.2982 (kg-min)/(hr-dsc-%) [0.0186 (lb-min)/(hr-dscf-%)];

K2= Material balance and conversion factor, 2.088 (kg-min)/(hr-dscm) [0.1303 (lb-min)/(hr-dscf)]; and

K3= Material balance and conversion factor, 0.0994 (kg-min)/(hr-dscm-%) [0.00624 (lb-min)/(hr-dscf-%)].

(iv) During the performance test, the volumetric flow rate of exhaust gas from catalyst regenerator (Qr) before any emission control or energy recovery system that burns auxiliary fuel is measured using Method 2 of appendix A–1 to part 60.

(v) For subsequent calculations of coke burn-off rates or exhaust gas flow rates, the volumetric flow rate of Qris calculated using average exhaust gas concentrations as measured by the monitors in §60.105a(b)(2), if applicable, using Equation 5 of this section:

$$Q_r = \frac{79 \times Q_a + (100 - \%Oxy) \times Q_{oxy}}{100 - \%CO_2 - \%CO - \%O_2} \qquad \text{(Eq. 5)}$$

Where:

Qr= Volumetric flow rate of exhaust gas from FCCU regenerator or fluid coking burner before any emission control or energy recovery system that burns auxiliary fuel, dscm/min (dscf/min);

Qa= Volumetric flow rate of air to FCCU regenerator or fluid coking burner, as determined from the unit's control room instrumentation, dscm/min (dscf/min);

Qoxy= Volumetric flow rate of O2enriched air to FCCU regenerator or fluid coking unit, as determined from the unit's control room instrumentation, dscm/min (dscf/min);

%CO2= Carbon dioxide concentration in FCCU regenerator or fluid coking burner exhaust, percent by volume (dry basis);

%CO = CO concentration FCCU regenerator or fluid coking burner exhaust, percent by volume (dry basis). When no auxiliary fuel is burned and a continuous CO monitor is not required in accordance with §60.105a(g)(3), assume %CO to be zero;

%O2= O2concentration in FCCU regenerator or fluid coking burner exhaust, percent by volume (dry basis); and

$\%O_{oxy}$= O2concentration in O2enriched air stream inlet to the FCCU regenerator or fluid coking burner, percent by volume (dry basis).

(5) Method 6, 6A, or 6C of appendix A–4 to part 60 for moisture content and for the concentration of SO2; the duration of each test run must be no less than 4 hours. The method ANSI/ASME PTC 19.10–1981, “Flue and Exhaust Gas Analyses,” (incorporated by reference—see §60.17) is an acceptable alternative to EPA Method 6 or 6A of appendix A–4 to part 60.

(6) Method 7, 7A, 7C, 7D, or 7E of appendix A–4 to part 60 for moisture content and for the concentration of NOXcalculated as nitrogen dioxide (NO2); the duration of each test run must be no less than 4 hours. The method ANSI/ASME PTC 19.10–1981, “Flue and Exhaust Gas Analyses,” (incorporated by reference—see §60.17) is an acceptable alternative to EPA Method 7 or 7C of appendix A–4 to part 60.

(7) Method 10, 10A, or 10B of appendix A–4 to part 60 for moisture content and for the concentration of CO. The sampling time for each run must be 60 minutes.

(8) The owner or operator shall adjust PM, NOX, SO2, and CO pollutant concentrations to 0 percent excess air or 0 percent O2using Equation 6 of this section:

$$C_{adj} = C_{meas} \left[20.9_c \Big/ (20.9 - \%O_2) \right] \qquad \text{(Eq. 6)}$$

Where:

Cadj= pollutant concentration adjusted to 0 percent excess air or O2, parts per million (ppm) or g/dscm;

Cmeas= pollutant concentration measured on a dry basis, ppm or g/dscm;

20.9c= 20.9 percent O2–0.0 percent O2(defined O2correction basis), percent;

20.9 = O2concentration in air, percent; and

%O2= O2concentration measured on a dry basis, percent.

(e) The owner or operator of a FCCU or FCU that is controlled by an electrostatic precipitator or wet scrubber and that is subject to control device operating parameter limits in §60.102a(c) shall establish the limits based on the performance test results according to the following procedures:

(1) Reduce the parameter monitoring data to hourly averages for each test run;

(2) Determine the hourly average operating limit for each required parameter as the average of the three test runs.

(f) The owner or operator of an FCCU or FCU that uses cyclones to comply with the PM limit in §60.102a(b)(1) and elects to comply with the COMS alternative monitoring option in §60.105a(d) shall establish a site-specific opacity operating limit according to the procedures in paragraphs (f)(1) through (3) of this section.

(1) Collect COMS data every 10 seconds during the entire period of the PM performance test and reduce the data to 6-minute averages.

(2) Determine and record the hourly average opacity from all the 6-minute averages.

(3) Compute the site-specific limit using Equation 7 of this section:

$$Opacity\ Limit = Opacity_{st}\, x \left(\frac{1 lb/1,000\, lb\ coke\ burn}{PMEmR_{st}} \right) \qquad \text{(Eq. 7)}$$

Where:

Opacity limit = Maximum permissible hourly average opacity, percent, or 10 percent, whichever is greater;

Opacityst= Hourly average opacity measured during the source test runs, percent; and

PMEmRst= PM emission rate measured during the source test, lb/1,000 lbs coke burn.

(g) The owner or operator of a FCCU or FCU that is exempt from the requirement to install and operate a CO CEMS pursuant to §60.105a(h)(3) and that is subject to control device operating parameter limits in §60.102a(c) shall establish the limits based on the performance test results using the procedures in paragraphs (g)(1) and (2) of this section.

(1) Reduce the temperature and O2concentrations from the parameter monitoring systems to hourly averages for each test run.

(2) Determine the operating limit for temperature and O2concentrations as the average of the average temperature and O2concentration for the three test runs.

(h) The owner or operator shall determine compliance with the SO2and H2S emissions limits for sulfur recovery plants in §§60.102a(f)(1)(i), 60.102a(f)(1)(iii), 60.102a(f)(1)(iii), 60.102a(f)(2)(i), and 60.102a(f)(2)(iii) and the reduced sulfur compounds and H2S emissions limits for sulfur recovery plants in §60.102a(f)(1)(ii) and §60.102a(f)(2)(ii) using the following methods and procedures:

(1) Method 1 of appendix A–1 to part 60 for sample and velocity traverses.

(2) Method 2 of appendix A–1 to part 60 for velocity and volumetric flow rate.

(3) Method 3, 3A, or 3B of appendix A–2 to part 60 for gas analysis. The method ANSI/ASME PTC 19.10–1981, “Flue and Exhaust Gas Analyses,” (incorporated by reference—see §60.17) is an acceptable alternative to EPA Method 3B of appendix A–2 to part 60.

(4) Method 6, 6A, or 6C of appendix A–4 to part 60 to determine the SO2concentration. The method ANSI/ASME PTC 19.10–1981, “Flue and Exhaust Gas Analyses,” (incorporated by reference—see §60.17) is an acceptable alternative to EPA Method 6 or 6A of appendix A–4 to part 60.

(5) Method 15 or 15A of appendix A–5 to part 60 or Method 16 of appendix A–6 to part 60 to determine the reduced sulfur compounds and H2S concentrations. The method ANSI/ASME PTC 19.10–1981, “Flue and Exhaust Gas Analyses,” (incorporated by reference—see §60.17) is an acceptable alternative to EPA Method 15A of appendix A–5 to part 60.

(i) Each run consists of 16 samples taken over a minimum of 3 hours.

(ii) The owner or operator shall calculate the average H2S concentration after correcting for moisture and O2as the arithmetic average of the H2S concentration for each sample during the run (ppmv, dry basis, corrected to 0 percent excess air).

(iii) The owner or operator shall calculate the SO2equivalent for each run after correcting for moisture and O2as the arithmetic average of the SO2equivalent of reduced sulfur compounds for each sample during the run (ppmv, dry basis, corrected to 0 percent excess air).

(iv) The owner or operator shall use Equation 6 of this section to adjust pollutant concentrations to 0 percent O2or 0 percent excess air.

(i) The owner or operator shall determine compliance with the SO2and NOXemissions limits in §60.102a(g) for a fuel gas combustion device according to the following test methods and procedures:

(1) Method 1 of appendix A–1 to part 60 for sample and velocity traverses;

(2) Method 2 of appendix A–1 to part 60 for velocity and volumetric flow rate;

(3) Method 3, 3A, or 3B of appendix A–2 to part 60 for gas analysis. The method ANSI/ASME PTC 19.10–1981, “Flue and Exhaust Gas Analyses,” (incorporated by reference—see §60.17) is an acceptable alternative to EPA Method 3B of appendix A–2 to part 60;

(4) Method 6, 6A, or 6C of appendix A–4 to part 60 to determine the SO_2concentration. The method ANSI/ASME PTC 19.10–1981, “Flue and Exhaust Gas Analyses,” (incorporated by reference—see §60.17) is an acceptable alternative to EPA Method 6 or 6A of appendix A–4 to part 60.

(i) The performance test consists of 3 valid test runs; the duration of each test run must be no less than 1 hour.

(ii) If a single fuel gas combustion device having a common source of fuel gas is monitored as allowed under §60.107a(a)(1)(v), only one performance test is required. That is, performance tests are not required when a new affected fuel gas combustion device is added to a common source of fuel gas that previously demonstrated compliance.

(5) Method 7, 7A, 7C, 7D, or 7E of appendix A–4 to part 60 for moisture content and for the concentration of NOXcalculated as NO2; the duration of each test run must be no less than 4 hours. The method ANSI/ASME PTC 19.10–1981, “Flue and Exhaust Gas Analyses,” (incorporated by reference—see §60.17) is an acceptable alternative to EPA Method 7 or 7C of appendix A–4 to part 60.

(j) The owner or operator shall determine compliance with the H2S emissions limit in §60.102a(g) for a fuel gas combustion device according to the following test methods and procedures:

(1) Method 1 of appendix A–1 to part 60 for sample and velocity traverses;

(2) Method 2 of appendix A–1 to part 60 for velocity and volumetric flow rate;

(3) Method 3, 3A, or 3B of appendix A–2 to part 60 for gas analysis. The method ANSI/ASME PTC 19.10–1981, “Flue and Exhaust Gas Analyses,” (incorporated by reference—see §60.17) is an acceptable alternative to EPA Method 3B of appendix A–2 to part 60;

(4) Method 11, 15, or 15A of appendix A–5 to part 60 or Method 16 of appendix A–6 to part 60 for determining the H_2S concentration for affected plants using an H_2S monitor as specified in §60.107a(a)(2). The method ANSI/ASME PTC 19.10–1981, “Flue and Exhaust Gas Analyses,” (incorporated by reference—see §60.17) is an acceptable alternative to EPA Method 15A of appendix A–5 to part 60. The owner or operator may demonstrate compliance based on the mixture used in the fuel gas combustion device or for each individual fuel gas stream used in the fuel gas combustion device.

(i) For Method 11 of appendix A–5 to part 60, the sampling time and sample volume must be at least 10 minutes and 0.010 dscm (0.35 dscf). Two samples of equal sampling times must be taken at about 1-hour intervals. The arithmetic average of these two samples constitutes a run. For most fuel gases, sampling times exceeding 20 minutes may result in depletion of the collection solution, although fuel gases containing low concentrations of H2S may necessitate sampling for longer periods of time.

(ii) For Method 15 of appendix A–5 to part 60, at least three injects over a 1-hour period constitutes a run.

(iii) For Method 15A of appendix A–5 to part 60, a 1-hour sample constitutes a run. The method ANSI/ASME PTC 19.10–1981, “Flue and Exhaust Gas Analyses,” (incorporated by reference—see §60.17) is an acceptable alternative to EPA Method 15A of appendix A–5 to part 60.

(iv) If monitoring is conducted at a single point in a common source of fuel gas as allowed under §60.107a(a)(2)(iv), only one performance test is required. That is, performance tests are not required when a new affected fuel gas combustion device is added to a common source of fuel gas that previously demonstrated compliance.

§ 60.105a Monitoring of emissions and operations for fluid catalytic cracking units (FCCU) and fluid coking units (FCU).

(a) *FCCU and FCU subject to PM emissions limit* . Each owner or operator subject to the provisions of this subpart shall monitor each FCCU and FCU subject to the PM emissions limit in §60.102a(b)(1) according to the requirements in paragraph (b), (c), (d), or (e) of this section.

(b) *Control device operating parameters* . Each owner or operator of a FCCU or FCU subject to the PM per coke burn-off emissions limit in §60.102a(b)(1) shall comply with the requirements in paragraphs (b)(1) through (3) of this section.

(1) The owner or operator shall install, operate, and maintain continuous parameter monitor systems (CPMS) to measure and record operating parameters for each control device according to the requirements in paragraph (b)(1)(i) through (iii) of this section.

(i) For units controlled using an electrostatic precipitator, the owner or operator shall use CPMS to measure and record the hourly average total power input and secondary voltage to the entire system.

(ii) For units controlled using a wet scrubber, the owner or operator shall use CPMS to measure and record the hourly average pressure drop, liquid feed rate, and exhaust gas flow rate. As an alternative to a CPMS, the owner or operator must comply with the requirements in either paragraph (b)(1)(ii)(A) or (B) of this section.

(A) As an alterative to pressure drop, the owner or operator of a jet ejector type wet scrubber or other type of wet scrubber equipped with atomizing spray nozzles must conduct a daily check of the air or water pressure to the spray nozzles and record the results of each check.

(B) As an alternative to exhaust gas flow rate, the owner or operator shall comply with the approved alternative for monitoring exhaust gas flow rate in 40 CFR 63.1573(a) of the National Emission Standards for Hazardous Air Pollutants for Petroleum Refineries: Catalytic Cracking Units, Catalytic Reforming Units, and Sulfur Recovery Units.

(iii) The owner or operator shall install, operate, and maintain each CPMS according to the manufacturer's specifications and requirements.

(iv) The owner or operator shall determine and record the average coke burn-off rate and hours of operation for each FCCU or FCU using the procedures in §60.104a(d)(4)(iii).

(v) If you use a control device other than an electrostatic precipitator, wet scrubber, fabric filter, or cyclone, you may request approval to monitor parameters other than those required in paragraph (b)(1) of this section by submitting an alternative monitoring plan to the Administrator. The request must include the information in paragraphs (b)(1)(v)(A) through (E) of this section.

(A) A description of each affected facility and the parameter(s) to be monitored to determine whether the affected facility will continuously comply with the emission limitations and an explanation of the criteria used to select the parameter(s).

(B) A description of the methods and procedures that will be used to demonstrate that the parameter(s) can be used to determine whether the affected facility will continuously comply with the emission limitations and the schedule for this demonstration. The owner or operator must certify that an operating limit will be established for the monitored parameter(s) that represents the conditions in existence when the control device is being properly operated and maintained to meet the emission limitation.

(C) The frequency and content of the recordkeeping, recording, and reporting, if monitoring and recording are not continuous. The owner or operator also must include the rationale for the proposed monitoring, recording, and reporting requirements.

(D) Supporting calculations.

(E) Averaging time for the alternative operating parameter.

(2) For use in determining the coke burn-off rate for an FCCU or FCU, the owner or operator shall install, operate, calibrate, and maintain an instrument for continuously monitoring the concentrations of CO_2, O_2(dry basis), and if needed, CO in the exhaust gases prior to any control or energy recovery system that burns auxiliary fuels.

(i) The owner or operator shall install, operate, and maintain each monitor according to Performance Specification 3 of appendix B to part 60.

(ii) The owner or operator shall conduct performance evaluations of each CO_2, O_2, and CO monitor according to the requirements in §60.13(c) and Performance Specification 3 of appendix B to part 60. The owner or operator shall use Method 3 of appendix A–3 to part 60 for conducting the relative accuracy evaluations.

(iii) The owner or operator shall comply with the quality assurance requirements of procedure 1 of appendix F to part 60, including quarterly accuracy determinations for $CO_2$and CO monitors, annual accuracy determinations for O_2monitors, and daily calibration drift tests.

(c) *Bag leak detection systems* . Each owner or operator shall install, operate, and maintain a bag leak detection system for each baghouse or similar fabric filter control device that is used to comply with the PM per coke burn-off emissions limit in §60.102a(b)(1) for an FCCU or FCU according to paragraph (c)(1) of this section; prepare and operate by a site-specific monitoring plan according to paragraph (c)(2) of this section; take action according to paragraph (c)(3) of this section; and record information according to paragraph (c)(4) of this section.

(1) Each bag leak detection system must meet the specifications and requirements in paragraphs (c)(1)(i) through (viii) of this section.

(i) The bag leak detection system must be certified by the manufacturer to be capable of detecting PM emissions at concentrations of 0.00044 grains per actual cubic foot or less.

(ii) The bag leak detection system sensor must provide output of relative PM loadings. The owner or operator shall continuously record the output from the bag leak detection system using electronic or other means (e.g., using a strip chart recorder or a data logger).

(iii) The bag leak detection system must be equipped with an alarm system that will sound when the system detects an increase in relative particulate loading over the alarm set point established according to paragraph (c)(1)(iv) of this section, and the alarm must be located such that it can be heard by the appropriate plant personnel.

(iv) In the initial adjustment of the bag leak detection system, the owner or operator must establish, at a minimum, the baseline output by adjusting the sensitivity (range) and the averaging period of the device, the alarm set points, and the alarm delay time.

(v) Following initial adjustment, the owner or operator shall not adjust the averaging period, alarm set point, or alarm delay time without approval from the Administrator or delegated authority except as provided in paragraph (c)(1)(vi) of this section.

(vi) Once per quarter, the owner or operator may adjust the sensitivity of the bag leak detection system to account for seasonal effects, including temperature and humidity, according to the procedures identified in the site-specific monitoring plan required by paragraph (c)(2) of this section.

(vii) The owner or operator shall install the bag leak detection sensor downstream of the baghouse and upstream of any wet scrubber.

(viii) Where multiple detectors are required, the system's instrumentation and alarm may be shared among detectors.

(2) The owner or operator shall develop and submit to the Administrator for approval a site-specific monitoring plan for each baghouse and bag leak detection system. The owner or operator shall operate and maintain each baghouse and bag leak detection system according to the site-specific monitoring plan at all times. Each monitoring plan must describe the items in paragraphs (c)(2)(i) through (vii) of this section.

(i) Installation of the bag leak detection system;

(ii) Initial and periodic adjustment of the bag leak detection system, including how the alarm set-point will be established;

(iii) Operation of the bag leak detection system, including quality assurance procedures;

(iv) How the bag leak detection system will be maintained, including a routine maintenance schedule and spare parts inventory list;

(v) How the bag leak detection system output will be recorded and stored;

(vi) Procedures as specified in paragraph (c)(3) of this section. In approving the site-specific monitoring plan, the Administrator or delegated authority may allow owners and operators more than 3 hours to alleviate a specific condition that causes an alarm if the owner or operator identifies in the monitoring plan this specific condition as one that could lead to an alarm, adequately explains why it is not feasible to alleviate this condition within 3 hours of the time the alarm occurs, and demonstrates that the requested time will ensure alleviation of this condition as expeditiously as practicable; and

(vii) How the baghouse system will be operated and maintained, including monitoring of pressure drop across baghouse cells and frequency of visual inspections of the baghouse interior and baghouse components such as fans and dust removal and bag cleaning mechanisms.

(3) For each bag leak detection system, the owner or operator shall initiate procedures to determine the cause of every alarm within 1 hour of the alarm. Except as provided in paragraph (c)(2)(vi) of this section, the owner or operator shall alleviate the cause of the alarm within 3 hours of the alarm by taking whatever action(s) are necessary. Actions may include, but are not limited to the following:

(i) Inspecting the baghouse for air leaks, torn or broken bags or filter media, or any other condition that may cause an increase in particulate emissions;

(ii) Sealing off defective bags or filter media;

(iii) Replacing defective bags or filter media or otherwise repairing the control device;

(iv) Sealing off a defective baghouse compartment;

(v) Cleaning the bag leak detection system probe or otherwise repairing the bag leak detection system; or

(vi) Shutting down the process producing the particulate emissions.

(4) The owner or operator shall maintain records of the information specified in paragraphs (c)(4)(i) through (iii) of this section for each bag leak detection system.

(i) Records of the bag leak detection system output;

(ii) Records of bag leak detection system adjustments, including the date and time of the adjustment, the initial bag leak detection system settings, and the final bag leak detection system settings; and

(iii) The date and time of all bag leak detection system alarms, the time that procedures to determine the cause of the alarm were initiated, the cause of the alarm, an explanation of the actions taken, the date and time the cause of the alarm was alleviated, and whether the alarm was alleviated within 3 hours of the alarm.

(d) *Continuous emissions monitoring systems (CEMS)* . An owner or operator subject to the PM concentration emission limit (in gr/dscf) in §60.102a(b)(1) for an FCCU or FCU shall install, operate, calibrate, and maintain an instrument for continuously monitoring and recording the concentration (0 percent excess air) of PM in the exhaust gases prior to release to the atmosphere. The monitor must include an O_2monitor for correcting the data for excess air.

(1) The owner or operator shall install, operate, and maintain each PM monitor according to Performance Specification 11 of appendix B to part 60. The span value of this PM monitor is 0.08 gr/dscf PM.

(2) The owner or operator shall conduct performance evaluations of each PM monitor according to the requirements in §60.13(c) and Performance Specification 11 of appendix B to part 60. The owner or operator shall use EPA Methods 5 or 5I of appendix A–3 to part 60 or Method 17 of appendix A–6 to part 60 for conducting the relative accuracy evaluations.

(3) The owner or operator shall install, operate, and maintain each O_2monitor according to Performance Specification 3 of appendix B to part 60. The span value of this O_2monitor must be selected between 10 and 25 percent, inclusive.

(4) The owner or operator shall conduct performance evaluations of each O_2monitor according to the requirements in §60.13(c) and Performance Specification 3 of appendix B to part 60. Method 3, 3A, or 3B of appendix A–2 to part 60 shall be used for conducting the relative accuracy evaluations. The method ANSI/ASME PTC 19.10–1981, “Flue and Exhaust Gas Analyses,” (incorporated by reference—see §60.17) is an acceptable alternative to EPA Method 3B of appendix A–2 to part 60.

(5) The owner or operator shall comply with the quality assurance requirements of Procedure 2 of appendix B to part 60 for each PM CEMS and Procedure 1 of appendix F to part 60 for each O_2monitor, including quarterly accuracy determinations for each PM monitor, annual accuracy determinations for each O_2monitor, and daily calibration drift tests.

(e) *Alternative monitoring option for FCCU and FCU—COMS* . Each owner or operator of an FCCU or FCU that uses cyclones to comply with the PM emission limit in §60.102a(b)(1) shall monitor the opacity of emissions according to the requirements in paragraphs (e)(1) through (3) of this section.

(1) The owner or operator shall install, operate, and maintain an instrument for continuously monitoring and recording the opacity of emissions from the FCCU or the FCU exhaust vent.

(2) The owner or operator shall install, operate, and maintain each COMS according to Performance Specification 1 of appendix B to part 60. The instrument shall be spanned at 20 to 60 percent opacity.

(3) The owner or operator shall conduct performance evaluations of each COMS according to §60.13(c) and Performance Specification 1 of appendix B to part 60.

(f) *FCCU and FCU subject to NO* X *limit* . Each owner or operator subject to the NO_Xemissions limit in §60.102a(b)(2) for an FCCU or FCU shall install, operate, calibrate, and maintain an instrument for continuously monitoring and recording the concentration by volume (dry basis, 0 percent excess air) of NO_Xemissions into the atmosphere. The monitor must include an O_2monitor for correcting the data for excess air.

(1) The owner or operator shall install, operate, and maintain each NO_Xmonitor according to Performance Specification 2 of appendix B to part 60. The span value of this NO_Xmonitor is 200 ppmv NO_X.

(2) The owner or operator shall conduct performance evaluations of each NO_Xmonitor according to the requirements in §60.13(c) and Performance Specification 2 of appendix B to part 60. The owner or operator shall use Methods 7, 7A, 7C, 7D, or 7E of appendix A–4 to part 60 for conducting the relative accuracy evaluations. The method ANSI/ASME PTC 19.10–1981, “Flue and Exhaust Gas Analyses,” (incorporated by reference—see §60.17) is an acceptable alternative to EPA Method 7 or 7C of appendix A–4 to part 60.

(3) The owner or operator shall install, operate, and maintain each O_2monitor according to Performance Specification 3 of appendix B to part 60. The span value of this O_2monitor must be selected between 10 and 25 percent, inclusive.

(4) The owner or operator shall conduct performance evaluations of each O_2monitor according to the requirements in §60.13(c) and Performance Specification 3 of appendix B to part 60. Method 3, 3A, or 3B of

appendix A–2 to part 60 shall be used for conducting the relative accuracy evaluations. The method ANSI/ASME PTC 19.10–1981, "Flue and Exhaust Gas Analyses," (incorporated by reference—see §60.17) is an acceptable alternative to EPA Method 3B of appendix A–2 to part 60.

(5) The owner or operator shall comply with the quality assurance requirements of Procedure 1 of appendix F to part 60 for each $NO_X$and O_2monitor, including quarterly accuracy determinations for NO_Xmonitors, annual accuracy determinations for O_2monitors, and daily calibration drift tests.

(g) *FCCU and FCU subject to SO* 2 *limit* . The owner or operator subject to the SO_2emissions limit in §60.102a(b)(3) for an FCCU or an FCU shall install, operate, calibrate, and maintain an instrument for continuously monitoring and recording the concentration by volume (dry basis, corrected to 0 percent excess air) of SO_2emissions into the atmosphere. The monitor shall include an O_2monitor for correcting the data for excess air.

(1) The owner or operator shall install, operate, and maintain each SO_2monitor according to Performance Specification 2 of appendix B to part 60. The span value of this SO_2monitor is 200 ppmv SO_2.

(2) The owner or operator shall conduct performance evaluations of each SO_2monitor according to the requirements in §60.13(c) and Performance Specification 2 of appendix B to part 60. The owner or operator shall use Methods 6, 6A, or 6C of appendix A–4 to part 60 for conducting the relative accuracy evaluations. The method ANSI / ASME PTC 19.10–1981, "Flue and Exhaust Gas Analyses," (incorporated by reference—see §60.17) is an acceptable alternative to EPA Method 6 or 6A of appendix A–4 to part 60.

(3) The owner or operator shall install, operate, and maintain each O_2monitor according to Performance Specification 3 of appendix B to part 60. The span value of this O_2monitor must be selected between 10 and 25 percent, inclusive.

(4) The owner or operator shall conduct performance evaluations of each O_2monitor according to the requirements in §60.13(c) and Performance Specification 3 of appendix B to part 60. Method 3, 3A, or 3B of appendix A–2 to part 60 shall be used for conducting the relative accuracy evaluations. The method ANSI/ASME PTC 19.10–1981, "Flue and Exhaust Gas Analyses," (incorporated by reference—see §60.17) is an acceptable alternative to EPA Method 3B of appendix A–2 to part 60.

(5) The owner or operator shall comply with the quality assurance requirements in Procedure 1 of appendix F to part 60 for each $SO_2$and O_2monitor, including quarterly accuracy determinations for SO_2monitors, annual accuracy determinations for O_2monitors, and daily calibration drift tests.

(h) *FCCU and fluid coking units subject to CO emissions limit* . Except as specified in paragraph (h)(3) of this section, the owner or operator shall install, operate, calibrate, and maintain an instrument for continuously monitoring and recording the concentration by volume (dry basis) of CO emissions into the atmosphere from each FCCU and FCU subject to the CO emissions limit in §60.102a(b)(4).

(1) The owner or operator shall install, operate, and maintain each CO monitor according to Performance Specification 4 or 4A of appendix B to part 60. The span value for this instrument is 1,000 ppm CO.

(2) The owner or operator shall conduct performance evaluations of each CO monitor according to the requirements in §60.13(c) and Performance Specification 4 or 4A of appendix B to part 60. The owner or operator shall use Methods 10, 10A, or 10B of appendix A–4 to part 60 for conducting the relative accuracy evaluations.

(3) A CO CEMS need not be installed if the owner or operator demonstrates that all hourly average CO emissions are and will remain less than 50 ppmv (dry basis) corrected to 0 percent excess air. The Administrator may revoke this exemption from monitoring upon a determination that CO emissions on an hourly average basis have exceeded 50 ppmv (dry basis) corrected to 0 percent excess air, in which case a CO CEMS shall be installed within 180 days.

(i) The demonstration shall consist of continuously monitoring CO emissions for 30 days using an instrument that meets the requirements of Performance Specification 4 or 4A of appendix B to part 60. The span value

shall be 100 ppm CO instead of 1,000 ppm, and the relative accuracy limit shall be 10 percent of the average CO emissions or 5 ppm CO, whichever is greater. For instruments that are identical to Method 10 of appendix A–4 to part 60 and employ the sample conditioning system of Method 10A of appendix A–4 to part 60, the alternative relative accuracy test procedure in section 10.1 of Performance Specification 2 of appendix B to part 60 may be used in place of the relative accuracy test.

(ii) The owner or operator must submit the following information to the Administrator:

(A) The measurement data specified in paragraph (h)(3)(i) of this section along with all other operating data known to affect CO emissions; and

(B) Descriptions of the CPMS for exhaust gas temperature and O_2monitor required in paragraph (h)(4) of this section and operating limits for those parameters to ensure combustion conditions remain similar to those that exist during the demonstration period.

(iii) The effective date of the exemption from installation and operation of a CO CEMS is the date of submission of the information and data required in paragraph (h)(3)(ii) of this section.

(4) The owner or operator of a FCCU or FCU that is exempted from the requirement to install and operate a CO CEMS in paragraph (h)(3) of this section shall install, operate, calibrate, and maintain CPMS to measure and record the operating parameters in paragraph (h)(4)(i) or (ii) of this section. The owner or operator shall install, operate, and maintain each CPMS according to the manufacturer's specifications.

(i) For a FCCU or FCU with no post-combustion control device, the temperature and O_2concentration of the exhaust gas stream exiting the unit.

(ii) For a FCCU or FCU with a post-combustion control device, the temperature and O_2concentration of the exhaust gas stream exiting the control device.

(i) *Excess emissions* . For the purpose of reports required by §60.7(c), periods of excess emissions for a FCCU or FCU subject to the emissions limitations in §60.102a(b) are defined as specified in paragraphs (i)(1) through (6) of this section. Note: Determine all averages, except for opacity, as the arithmetic average of the applicable 1-hour averages, *e.g.* , determine the rolling 3-hour average as the arithmetic average of three contiguous 1-hour averages.

(1) If a CPMS is used according to §60.105a(b)(1), all 3-hour periods during which the average PM control device operating characteristics, as measured by the continuous monitoring systems under §60.105a(b)(1), fall below the levels established during the performance test.

(2) If a PM CEMS is used according to §60.105a(d), all 7-day periods during which the average PM emission rate, as measured by the continuous PM monitoring system under §60.105a(d) exceeds 0.040 gr/dscf corrected to 0 percent excess air for a modified or reconstructed FCCU, 0.020 gr/dscf corrected to 0 percent excess air for a newly constructed FCCU, or 0.040 gr/dscf for an affected fluid coking unit.

(3) If a COMS is used according to §60.105a(e), all 3-hour periods during which the average opacity, as measured by the COMS under §60.105a(e), exceeds the site-specific limit established during the most recent performance test.

(4) All rolling 7-day periods during which the average concentration of NO_Xas measured by the NO_XCEMS under §60.105a(f) exceeds 80 ppmv for an affected FCCU or FCU.

(5) Except as provided in paragraph (i)(7) of this section, all rolling 7-day periods during which the average concentration of SO_2as measured by the SO_2CEMS under §60.105a(g) exceeds 50 ppmv, and all rolling 365-day periods during which the average concentration of SO_2as measured by the SO_2CEMS exceeds 25 ppmv.

(6) All 1-hour periods during which the average CO concentration as measured by the CO continuous monitoring system under §1A60.105a(h) exceeds 500 ppmv or, if applicable, all 1-hour periods during which the average temperature and O_2concentration as measured by the continuous monitoring systems under §60.105a(h)(4) fall below the operating limits established during the performance test.

§ 60.106a Monitoring of emissions and operations for sulfur recovery plants.

(a) The owner or operator of a sulfur recovery plant that is subject to the emissions limits in §60.102a(f)(1) or §60.102a(f)(2) shall:

(1) For sulfur recovery plants subject to the SO_2emission limit in §60.102a(f)(1)(i) or §60.102a(f)(2)(i), the owner or operator shall install, operate, calibrate, and maintain an instrument for continuously monitoring and recording the concentration (dry basis, zero percent excess air) of any SO_2emissions into the atmosphere. The monitor shall include an oxygen monitor for correcting the data for excess air.

(i) The span values for this monitor are two times the applicable SO_2emission limit and between 10 and 25 percent O_2, inclusive.

(ii) The owner or operator shall install, operate, and maintain each SO_2CEMS according to Performance Specification 2 of appendix B to part 60.

(iii) The owner or operator shall conduct performance evaluations of each SO_2monitor according to the requirements in §60.13(c) and Performance Specification 2 of appendix B to part 60. The owner or operator shall use Methods 6 or 6C of appendix A–4 to part 60 and Method 3 or 3A of appendix A–2 of part 60 for conducting the relative accuracy evaluations. The method ANSI/ASME PTC 19.10–1981, “Flue and Exhaust Gas Analyses,” (incorporated by reference—see §60.17) is an acceptable alternative to EPA Method 6.

(2) For sulfur recovery plants that are subject to the reduced sulfur compound and H_2S emission limit in §60.102a(f)(1)(ii) or §60.102a(f)(2)(ii), the owner or operator shall install, operate, calibrate, and maintain an instrument for continuously monitoring and recording the concentration of reduced sulfur, H_2S, and O_2emissions into the atmosphere. The reduced sulfur emissions shall be calculated as SO_2(dry basis, zero percent excess air).

(i) The span values for this monitor are two times the applicable reduced sulfur emission limit, two times the H_2S emission limit, and between 10 and 25 percent O_2, inclusive.

(ii) The owner or operator shall install, operate, and maintain each reduced sulfur CEMS according to Performance Specification 5 of appendix B to part 60.

(iii) The owner or operator shall conduct performance evaluations of each reduced sulfur monitor according to the requirements in §60.13(c) and Performance Specification 5 of appendix B to part 60. The owner or operator shall use Methods 15 or 15A of appendix A–5 to part 60 for conducting the relative accuracy evaluations. The method ANSI/ASME PTC 19.10–1981, “Flue and Exhaust Gas Analyses,” (incorporated by reference—see §60.17) is an acceptable alternative to EPA Method 15A of appendix A–5 to part 60.

(iv) The owner or operator shall install, operate, and maintain each H_2S CEMS according to Performance Specification 7 of appendix B to part 60.

(v) The owner or operator shall conduct performance evaluations of each reduced sulfur monitor according to the requirements in §60.13(c) and Performance Specification 5 of appendix B to part 60. The owner or operator shall use Methods 11, 15, or 15A of appendix A–5 to part 60 or Method 16 of appendix A–6 to part 60 for conducting the relative accuracy evaluations. The method ANSI/ASME PTC 19.10–1981, “Flue and Exhaust Gas Analyses,” (incorporated by reference—see §60.17) is an acceptable alternative to EPA Method 15A of appendix A–5 to part 60.

(vi) The owner or operator shall install, operate, and maintain each O_2monitor according to Performance Specification 3 of appendix B to part 60.

(vii) The span value for the O_2monitor must be selected between 10 and 25 percent, inclusive.

(viii) The owner or operator shall conduct performance evaluations for the O_2monitor according to the requirements of §60.13(c) and Performance Specification 3 of appendix B to part 60. The owner or operator shall use Methods 3, 3A, or 3B of appendix A–2 to part 60 for conducting the relative accuracy evaluations. The method ANSI/ASME PTC 19.10–1981, “Flue and Exhaust Gas Analyses,” (incorporated by reference—see §60.17) is an acceptable alternative to EPA Method 3B of appendix A–2 to part 60.

(ix) The owner or operator shall comply with the applicable quality assurance procedures of appendix F to part 60 for each monitor, including annual accuracy determinations for each O_2monitor, and daily calibration drift determinations.

(3) In place of the reduced sulfur monitor required in paragraph (a)(2) of this section, the owner or operator shall install, calibrate, operate, and maintain an instrument using an air or O_2dilution and oxidation system to convert any reduced sulfur to $SO_2$for continuously monitoring and recording the concentration (dry basis, 0 percent excess air) of the total resultant SO_2. The monitor must include an O_2monitor for correcting the data for excess O_2.

(i) The span value for this monitor is two times the applicable SO_2emission limit.

(ii) The owner or operator shall conduct performance evaluations of each SO_2monitor according to the requirements in §60.13(c) and Performance Specification 5 of appendix B to part 60. The owner or operator shall use Methods 15 or 15A of appendix A–5 to part 60 for conducting the relative accuracy evaluations. The method ANSI/ASME PTC 19.10–1981, “Flue and Exhaust Gas Analyses,” (incorporated by reference—see §60.17) is an acceptable alternative to EPA Method 15A of appendix A–5 to part 60.

(iii) The owner or operator shall install, operate, and maintain each O_2monitor according to Performance Specification 3 of appendix B to part 60.

(iv) The span value for the O_2monitor must be selected between 10 and 25 percent, inclusive.

(v) The owner or operator shall conduct performance evaluations for the O_2monitor according to the requirements of §60.13(c) and Performance Specification 3 of appendix B to part 60. The owner or operator shall use Methods 3, 3A, or 3B of appendix A–2 to part 60 for conducting the relative accuracy evaluations. The method ANSI/ASME PTC 19.10–1981, “Flue and Exhaust Gas Analyses,” (incorporated by reference—see §60.17) is an acceptable alternative to EPA Method 3B of appendix A–2 to part 60.

(vi) The owner or operator shall comply with the applicable quality assurance procedures of appendix F to part 60 for each monitor, including quarterly accuracy determinations for each SO_2monitor, annual accuracy determinations for each O_2monitor, and daily calibration drift determinations.

(b) *Excess emissions* . For the purpose of reports required by §60.7(c), periods of excess emissions for sulfur recovery plants subject to the emissions limitations in §60.102a(f) are defined as specified in paragraphs (b)(1) through (3) of this section.Note:Determine all averages as the arithmetic average of the applicable 1-hour averages, e.g., determine the rolling 12-hour average as the arithmetic average of 12 contiguous 1-hour averages.

(1) All 12-hour periods during which the average concentration of SO_2as measured by the SO_2continuous monitoring system required under paragraph (a)(1) of this section exceeds the applicable emission limit (dry basis, zero percent excess air); or

(2) All 12-hour periods during which the average concentration of reduced sulfur (as SO_2) as measured by the reduced sulfur continuous monitoring system required under paragraph (a)(2) of this section exceeds the applicable emission limit; or

(3) All 12-hour periods during which the average concentration of H_2S as measured by the H_2S continuous monitoring system required under paragraph (a)(2) of this section exceeds the applicable emission limit (dry basis, 0 percent excess air).

§ 60.107a Monitoring of emissions and operations for fuel gas combustion devices.

(a) *Fuel gas combustion devices subject to SO* 2 *or H* 2 *S limit.* The owner or operator of a fuel gas combustion device that is subject to the requirements in §60.102a(g) shall comply with the requirements in paragraph (a)(1) of this section for SO_2emissions or paragraph (a)(2) of this section for H_2S emissions.

(1) The owner or operator of a fuel gas combustion device subject to the SO_2emissions limits in §60.102a(g)(1)(i) shall install, operate, calibrate, and maintain an instrument for continuously monitoring and recording the concentration (dry basis, 0 percent excess air) of SO_2emissions into the atmosphere. The monitor must include an O_2monitor for correcting the data for excess air.

(i) The owner or operator shall install, operate, and maintain each SO_2monitor according to Performance Specification 2 of appendix B to part 60. The span value for the SO_2monitor is 50 ppm SO_2.

(ii) The owner or operator shall conduct performance evaluations for the SO_2monitor according to the requirements of §60.13(c) and Performance Specification 2 of appendix B to part 60. The owner or operator shall use Methods 6, 6A, or 6C of appendix A–4 to part 60 for conducting the relative accuracy evaluations. The method ANSI/ASME PTC 19.10–1981, “Flue and Exhaust Gas Analyses,” (incorporated by reference—see §60.17) is an acceptable alternative to EPA Method 6 or 6A of appendix A–4 to part 60. Samples taken by Method 6 of appendix A–4 to part 60 shall be taken at a flow rate of approximately 2 liters/min for at least 30 minutes. The relative accuracy limit shall be 20 percent or 4 ppm, whichever is greater, and the calibration drift limit shall be 5 percent of the established span value.

(iii) The owner or operator shall install, operate, and maintain each O_2monitor according to Performance Specification 3 of appendix B to part 60. The span value for the O_2monitor must be selected between 10 and 25 percent, inclusive.

(iv) The owner or operator shall conduct performance evaluations for the O_2monitor according to the requirements of §60.13(c) and Performance Specification 3 of appendix B to part 60. The owner or operator shall use Methods 3, 3A, or 3B of appendix A–2 to part 60 for conducting the relative accuracy evaluations. The method ANSI/ASME PTC 19.10–1981, “Flue and Exhaust Gas Analyses,” (incorporated by reference—see §60.17) is an acceptable alternative to EPA Method 3B of appendix A–2 to part 60.

(v) The owner or operator shall comply with the applicable quality assurance procedures in appendix F to part 60, including quarterly accuracy determinations for SO_2monitors, annual accuracy determinations for O_2monitors, and daily calibration drift tests.

(vi) Fuel gas combustion devices having a common source of fuel gas may be monitored at only one location (i.e., after one of the combustion devices), if monitoring at this location accurately represents the SO_2emissions into the atmosphere from each of the combustion devices.

(2) The owner or operator of a fuel gas combustion device subject to the H_2S concentration limits in §60.102a(g)(1)(ii) shall install, operate, calibrate, and maintain an instrument for continuously monitoring and recording the concentration by volume (dry basis) of H_2S in the fuel gases before being burned in any fuel gas combustion device.

(i) The owner or operator shall install, operate, and maintain each H_2S monitor according to Performance Specification 7 of appendix B to part 60. The span value for this instrument is 320 ppmv H_2S.

(ii) The owner or operator shall conduct performance evaluations for each H_2S monitor according to the requirements of §60.13(c) and Performance Specification 7 of appendix B to part 60. The owner or operator shall use Method 11, 15, or 15A of appendix A–5 to part 60 or Method 16 of appendix A–6 to part 60 for conducting the relative accuracy evaluations. The method ANSI/ASME PTC 19.10–1981, “Flue and Exhaust

Gas Analyses," (incorporated by reference—see §60.17) is an acceptable alternative to EPA Method 15A of appendix A–5 to part 60.

(iii) The owner or operator shall comply with the applicable quality assurance procedures in appendix F to part 60 for each H_2S monitor.

(iv) Fuel gas combustion devices having a common source of fuel gas may be monitored at only one location, if monitoring at this location accurately represents the concentration of H_2S in the fuel gas being burned.

(3) The owner or operator of a fuel gas combustion device is not required to comply with paragraph (a)(1) or (2) of this section for fuel gas streams that are exempt under §60.102a(h) and fuel gas streams combusted in a process heater or other fuel gas combustion device that are inherently low in sulfur content. Fuel gas streams meeting one of the requirements in paragraphs (a)(3)(i) through (iv) of this section will be considered inherently low in sulfur content.

(i) Pilot gas for heaters and flares.

(ii) Fuel gas streams that meet a commercial-grade product specification for sulfur content of 30 ppmv or less. In the case of a liquefied petroleum gas (LPG) product specification in the pressurized liquid state, the gas phase sulfur content should be evaluated assuming complete vaporization of the LPG and sulfur containing-compounds at the product specification concentration.

(iii) Fuel gas streams produced in process units that are intolerant to sulfur contamination, such as fuel gas streams produced in the hydrogen plant, catalytic reforming unit, isomerization unit, and HF alkylation process units.

(iv) Other fuel gas streams that an owner or operator demonstrates are low-sulfur according to the procedures in paragraph (b) of this section.

(4) If the composition of an exempt fuel gas stream changes, the owner or operator must follow the procedures in paragraph (b)(3) of this section.

(b) *Exemption from H* 2 *S monitoring requirements for low-sulfur fuel gas streams.* The owner or operator of a fuel gas combustion device may apply for an exemption from the H_2S monitoring requirements in paragraph (a)(2) of this section for a fuel gas stream that is inherently low in sulfur content. A fuel gas stream that is demonstrated to be low-sulfur is exempt from the monitoring requirements of paragraphs (a)(1) and (2) of this section until there are changes in operating conditions or stream composition.

(1) The owner or operator shall submit to the Administrator a written application for an exemption from monitoring. The application must contain the following information:

(i) A description of the fuel gas stream/system to be considered, including submission of a portion of the appropriate piping diagrams indicating the boundaries of the fuel gas stream/system, and the affected fuel gas combustion device(s) to be considered;

(ii) A statement that there are no crossover or entry points for sour gas (high H_2S content) to be introduced into the fuel gas stream/system (this should be shown in the piping diagrams);

(iii) An explanation of the conditions that ensure low amounts of sulfur in the fuel gas stream (i.e., control equipment or product specifications) at all times;

(iv) The supporting test results from sampling the requested fuel gas stream/system demonstrating that the sulfur content is less than 5 ppm H_2S. Sampling data must include, at minimum, 2 weeks of daily monitoring (14 grab samples) for frequently operated fuel gas streams/systems; for infrequently operated fuel gas streams/systems, seven grab samples must be collected unless other additional information would support reduced sampling. The owner or operator shall use detector tubes ("length-of-stain tube" type measurement)

following the "Gas Processors Association Standard 2377–86, Test for Hydrogen Sulfide and Carbon Dioxide in Natural Gas Using Length of Stain Tubes," 1986 Revision (incorporated by reference—see §60.17), with ranges 0–10/0–100 ppm (N = 10/1) to test the applicant fuel gas stream for H_2S; and

(v) A description of how the 2 weeks (or seven samples for infrequently operated fuel gas streams/systems) of monitoring results compares to the typical range of H_2S concentration (fuel quality) expected for the fuel gas stream/system going to the affected fuel gas combustion device (e.g., the 2 weeks of daily detector tube results for a frequently operated loading rack included the entire range of products loaded out, and, therefore, should be representative of typical operating conditions affecting H_2S content in the fuel gas stream going to the loading rack flare).

(2) The effective date of the exemption is the date of submission of the information required in paragraph (b)(1) of this section.

(3) No further action is required unless refinery operating conditions change in such a way that affects the exempt fuel gas stream/system (e.g., the stream composition changes). If such a change occurs, the owner or operator shall follow the procedures in paragraph (b)(3)(i), (b)(3)(ii), or (b)(3)(iii) of this section.

(i) If the operation change results in a sulfur content that is still within the range of concentrations included in the original application, the owner or operator shall conduct an H_2S test on a grab sample and record the results as proof that the concentration is still within the range.

(ii) If the operation change results in a sulfur content that is outside the range of concentrations included in the original application, the owner or operator may submit new information following the procedures of paragraph (b)(1) of this section within 60 days (or within 30 days after the seventh grab sample is tested for infrequently operated process units).

(iii) If the operation change results in a sulfur content that is outside the range of concentrations included in the original application, and the owner or operator chooses not to submit new information to support an exemption, the owner or operator must begin H_2S monitoring using daily stain sampling to demonstrate compliance. The owner or operator must begin monitoring according to the requirements in paragraphs (a)(1) or (a)(2) of this section as soon as practicable but in no case later than 180 days after the operation change. During daily stain tube sampling, a daily sample exceeding 162 ppmv is an exceedance of the 3-hour H_2S concentration limit. The owner or operator must determine a rolling 365-day average using the stain sampling results; an average H_2S concentration of 5 ppmv must be used for days prior to the operation change.

(c) *Process heaters subject to NO* X *limit.* The owner or operator of a process heater subject to the NO_Xemission limit in §60.102a(g)(2) shall install, operate, calibrate, and maintain an instrument for continuously monitoring and recording the concentration (dry basis, 0 percent excess air) of NO_Xemissions into the atmosphere. The monitor must include an O_2monitor for correcting the data for excess air.

(1) The owner or operator shall install, operate, and maintain each NO_Xmonitor according to Performance Specification 2 of appendix B to part 60. The span value of this NO_Xmonitor is 200 ppmv NO_X.

(2) The owner or operator shall conduct performance evaluations of each NO_Xmonitor according to the requirements in §60.13(c) and Performance Specification 2 of appendix B to part 60. The owner or operator shall use Methods 7, 7A, 7C, 7D, or 7E of appendix A–4 to part 60 for conducting the relative accuracy evaluations. The method ANSI/ASME PTC 19.10–1981, "Flue and Exhaust Gas Analyses," (incorporated by reference—see §60.17) is an acceptable alternative to EPA Method 7 or 7C of appendix A–4 to part 60.

(3) The owner or operator shall install, operate, and maintain each O_2monitor according to Performance Specification 3 of appendix B to part 60. The span value of this O_2monitor must be selected between 10 and 25 percent, inclusive.

(4) The owner or operator shall conduct performance evaluations of each O_2monitor according to the requirements in §60.13(c) and Performance Specification 3 of appendix B to part 60. Method 3, 3A, or 3B of appendix A–2 to part 60 shall be used for conducting the relative accuracy evaluations. The method

ANSI/ASME PTC 19.10–1981, “Flue and Exhaust Gas Analyses,” (incorporated by reference—see §60.17) is an acceptable alternative to EPA Method 3B of appendix A–2 to part 60.

(5) The owner or operator shall comply with the quality assurance requirements in Procedure 1 of appendix F to part 60 for each $NO_X$and O_2monitor, including quarterly accuracy determinations for NO_Xmonitors, annual accuracy determinations for O_2monitors, and daily calibration drift tests.

(6) The owner or operator of a process heater that has a rated heating capacity of less than 100 MMBtu and is equipped with low-NO_Xburners (LNB) or ultra low-NO_Xburners (ULNB) is not subject to the monitoring requirements in paragraphs (c)(1) through (5) of this section. The owner or operator of such a process heater must conduct biennial performance tests to demonstrate compliance.

(d) *Sulfur monitoring for affected flares* . The owner or operator of an affected flare subject to §60.103a(b) shall install, operate, calibrate, and maintain an instrument for continuously monitoring and recording the concentration of reduced sulfur in flare gas. The owner or operator of a modified flare shall install this instrument by no later than 1 year after the flare becomes an affected flare subject to this subpart.

(1) The owner or operator shall install, operate, and maintain each reduced sulfur CEMS according to Performance Specification 5 of appendix B to part 60.

(2) The owner or operator shall conduct performance evaluations of each reduced sulfur monitor according to the requirements in §60.13(c) and Performance Specification 5 of appendix B to part 60. The owner or operator shall use Methods 15 or 15A of appendix A–5 to part 60 for conducting the relative accuracy evaluations. The method ANSI/ASME PTC 19.10–1981, “Flue and Exhaust Gas Analyses,” (incorporated by reference—see §60.17) is an acceptable alternative to EPA Method 15A of appendix A–5 to part 60.

(3) The owner or operator shall comply with the applicable quality assurance procedures in appendix F to part 60 for each reduced sulfur monitor.

(e) *Flow monitoring for flares* . The owner or operator of an affected flare subject to §60.102a(g)(3) shall install, operate, calibrate, and maintain CPMS to measure and record the exhaust gas flow rate. The owner or operator of a modified flare shall install this instrument by no later than 1 year after the flare becomes an affected flare subject to this subpart.

(1) The CPMS must be able to correct for the temperature and pressure of the system and output flow in standard conditions as defined in §60.2.

(2) The owner or operator shall install, operate, and maintain each CPMS according to the manufacturer's specifications and requirements.

(f) *Excess emissions* . For the purpose of reports required by §60.7(c), periods of excess emissions for fuel gas combustion devices subject to the emissions limitations in §60.102a(g) are defined as specified in paragraphs (f)(1) through (4) of this section.Note:Determine all averages as the arithmetic average of the applicable 1-hour averages, e.g., determine the rolling 3-hour average as the arithmetic average of three contiguous 1-hour averages.

(1) All rolling 3-hour periods during which the average concentration of SO_2as measured by the SO_2continuous monitoring system required under paragraph (a)(1) of this section exceeds 20 ppmv, and all rolling 365-day periods during which the average concentration as measured by the SO_2continuous monitoring system required under paragraph (a)(1) of this section exceeds 8 ppmv; or

(2) All rolling 3-hour periods during which the average concentration of H_2S as measured by the H_2S continuous monitoring system required under paragraph (a)(2) of this section exceeds 162 ppmv, all days in which the concentration of H_2S as measured by daily stain tube sampling required under paragraph (b)(3)(iii) of this section exceeds 162 ppmv, and all rolling 365-day periods during which the average concentration as measured by the H_2S continuous monitoring system under paragraph (a)(2) of this section exceeds 60 ppmv.

(3) All rolling 24-hour periods during which the average concentration of NO_Xas measured by the NO_Xcontinuous monitoring system required under paragraph (c) of this section exceeds 40 ppmv.

(4) All rolling 30-day periods during which the average flow rate to an affected flare as measured by the monitoring system required under paragraph (e) of this section exceeds 250,000 scfd.

§ 60.108a Recordkeeping and reporting requirements.

(a) Each owner or operator subject to the emissions limitations in §60.102a shall comply with the notification, recordkeeping, and reporting requirements in §60.7 and other requirements as specified in this section.

(b) Each owner or operator subject to an emissions limitation in §60.102a shall notify the Administrator of the specific monitoring provisions of §§60.105a, 60.106a, and 60.107a with which the owner or operator seeks to comply. Notification shall be submitted with the notification of initial startup required by §60.7(a)(3).

(c) The owner or operator shall maintain the following records:

(1) A copy of the flare management plan and each root cause analysis of a discharge;

(2) Records of information to document conformance with bag leak detection system operation and maintenance requirements in §60.105a(c).

(3) Records of bag leak detection system alarms and actions according to §60.105a(c).

(4) For each FCCU and fluid coking unit subject to the monitoring requirements in §60.105a(b)(1), records of the average coke burn-off rate and hours of operation.

(5) For each fuel gas stream to which one of the exemptions listed in §60.107a(a)(3) applies, records of the specific exemption determined to apply for each fuel stream. If the owner or operator applies for the exemption described in §60.107a(a)(3)(iv), the owner or operator must keep a copy of the application as well as the letter from the Administrator granting approval of the application.

(6) The owner or operator shall record and maintain records of discharges greater than 500 lb/day $SO_2$from any affected fuel gas combustion device or sulfur recovery plant and discharges to an affected flare in excess of 500,000 scfd. These records shall include:

(i) A description of the discharge.

(ii) For discharges greater than 500 lb/day SO_2, the date and time the discharge was first identified and the duration of the discharge.

(iii) The measured or calculated cumulative quantity of gas discharged over the discharge duration. If the discharge duration exceeds 24 hours, record the discharge quantity for each 24-hour period. Engineering calculations are allowed for fuel gas combustion devices other than flares.

(iv) For discharges greater than 500 lb/day SO_2, the measured or estimated concentration of H_2S, TRS and $SO_2$of the stream discharged. Process knowledge can be used to make these estimates for fuel gas combustion devices other than flares.

(v) For discharges greater than 500 lb/day SO_2, the cumulative quantity of H_2S and SO_2released into the atmosphere. For releases controlled by flares, assume 99 percent conversion of reduced sulfur to SO_2. For other fuel gas combustion devices, assume 99 percent conversion of H_2S to SO_2.

(vi) Results of any root-cause analysis conducted as required in §60.103a(a)(4) and §60.103a(b).

(d) Each owner or operator subject to this subpart shall submit an excess emissions report for all periods of excess emissions according to the requirements of §60.7(c) except that the report shall contain the information specified in paragraphs (d)(1) through (7) of this section.

(1) The date that the exceedance occurred;

(2) An explanation of the exceedance;

(3) Whether the exceedance was concurrent with a startup, shutdown, or malfunction of an affected facility or control system; and

(4) A description of the action taken, if any.

(5) A root-cause summary report that provides the information described in paragraph (e)(6) of this section for all discharges for which a root-cause analysis was required by §60.103a(a)(4) and §60.103a(b).

(6) For any periods for which monitoring data are not available, any changes made in operation of the emission control system during the period of data unavailability which could affect the ability of the system to meet the applicable emission limit. Operations of the control system and affected facility during periods of data unavailability are to be compared with operation of the control system and affected facility before and following the period of data unavailability.

(7) A written statement, signed by a responsible official, certifying the accuracy and completeness of the information contained in the report.

§ 60.109a Delegation of authority.

(a) This subpart can be implemented and enforced by the U.S. EPA or a delegated authority such as a State, local, or tribal agency. You should contact your U.S. EPA Regional Office to find out if this subpart is delegated to a State, local, or tribal agency within your State.

(b) In delegating implementation and enforcement authority of this subpart to a State, local, or tribal agency, the approval authorities contained in paragraphs (b)(1) through (3) of this section are retained by the Administrator of the U.S. EPA and are not transferred to the State, local, or tribal agency.

(1) Approval of a major change to test methods under §60.8(b). A “major change to test method” is defined in 40 CFR 63.90.

(2) Approval of a major change to monitoring under §60.13(i). A “major change to monitoring” is defined in 40 CFR 63.90.

(3) Approval of a major change to recordkeeping/reporting under §60.7(b) through (f). A “major change to recordkeeping/reporting” is defined in 40 CFR 63.90.

Indiana Department of Environmental Management
Office of Air Quality

Technical Support Document (TSD) for a Part 70 Minor Permit Modification

Source Description and Location

Source Name:	Countrymark Cooperative, LLP
Source Location:	1200 Refinery Road, Mount Vernon, Indiana 47620
County:	Posey
SIC Code:	2911
Operation Permit No.:	129-7882-00003
Operation Permit Issuance Date:	July 21, 2003
Minor Source Modification No.:	129-26889-00003
Significant Permit Modification No.:	129-26980-00003
Permit Reviewer:	Michael S. Brooks

Source Definition

This stationary petroleum refinery company consists of two (2) plants:

(a) Plant 1, the refinery, is located at 1200 Refinery Road, Mount Vernon, IN 47620; and

(b) Plant 2, the river dock terminal, is located at South Mann St. and Ohio St., Mount Vernon, IN 47620.

Since the two (2) plants are located on contiguous or adjacent properties, belong to the same industrial grouping, and are under common control of the same entity, they will be considered one (1) source, effective from the date of issuance of this Part 70 permit.

Separate Part 70 permits will be issued to Countrymark Cooperative, LLP with Permit No.:T129-7882-00003 and Permit No.:129-7742-00037 solely for administrative purposes.

Existing Approvals

The source was issued Part 70 Operating Permit No. T129-7882-00003 on July 21, 2003. The source has since received the following approvals:

(a) Minor Source Modification No.: 129-18135, issued on November 17, 2003;

(b) Significant Permit Modification No.: 129-17940, issued on November 24, 2003;

(c) Significant Source Modification No.: 129-18672, issued on February 1, 2005;

(d) Significant Permit Modification No.: 129-20112, issued on March 21, 2005;

(e) Administrative Amendment No.: 129-20343, issued on March 30, 2005;

(f) Minor Source Modification No.: 129-21168, issued on June 1, 2005;

(g) Significant Permit Modification No.: 129-21251, issued on August 15, 2005;

(h) Significant Source Mod. No.: 129-22917-00003, issued on December 8, 2006;

(i) Significant Permit Modification No. 129-23090-00003, issued on January 30, 2007; and

(j) Significant Permit Modification No. 129-24761-00003, issued on December 17, 2007.

County Attainment Status

The source is located in Posey County.

Pollutant	Designation
SO_2	Better than national standards.
CO	Unclassifiable or attainment effective November 15, 1990.
O_3	Unclassifiable or attainment effective June 15, 2004, for the 8-hour ozone standard.[1]
PM_{10}	Unclassifiable effective November 15, 1990.
NO_2	Cannot be classified or better than national standards.
Pb	Not designated.

[1]Unclassifiable or attainment effective October 18, 2000, for the 1-hour ozone standard which was revoked effective June 15, 2005.
Unclassifiable or attainment effective April 5, 2005, for PM2.5.

(a) Ozone Standards

(1) On October 25, 2006, the Indiana Air Pollution Control Board finalized a rule revision to 326 IAC 1-4-1 revoking the one-hour ozone standard in Indiana.

(2) On September 6, 2007, the Indiana Air Pollution Control Board finalized a temporary emergency rule to re-designate Allen, Clark, Elkhart, Floyd, LaPorte, and St. Joseph counties as attainment for the 8-hour ozone standard.

(3) On November 9, 2007, the Indiana Air Pollution Control Board finalized a temporary emergency rule to re-designate Boone, Hamilton, Hancock, Hendricks, Johnson, Madison, Marion, Morgan, and Shelby counties as attainment for the 8-hour ozone standard.

(4) Volatile organic compounds (VOC) and Nitrogen Oxides (NOx) are regulated under the Clean Air Act (CAA) for the purposes of attaining and maintaining the National Ambient Air Quality Standards (NAAQS) for ozone. Therefore, VOC and NOx emissions are considered when evaluating the rule applicability relating to ozone. Posey County has been designated as attainment or unclassifiable for ozone. Therefore, VOC and NOx emissions were reviewed pursuant to the requirements for Prevention of Significant Deterioration (PSD), 326 IAC 2-2.

(b) Posey County has been classified as attainment for PM2.5. On May 8, 2008, U.S. EPA promulgated the requirements for Prevention of Significant Deterioration (PSD) for PM2.5 emissions, and the effective date of these rules is July 15, 2008. Indiana has three years from the publication of these rules to revise its PSD rules, 326 IAC 2-2, to include those requirements. The May 8, 2008, rule revisions require IDEM to regulate PM10 emissions as a surrogate for PM2.5 emissions until 326 IAC 2-2 is revised.

(c) Other Criteria Pollutants
Posey County has been classified as attainment or unclassifiable in Indiana for all other criteria pollutants. Therefore, these emissions were reviewed pursuant to the requirements for Prevention of Significant Deterioration (PSD), 326 IAC 2-2.

(d) Since this source is classified as a petroleum refinery, it is considered one of the twenty-eight (28) listed source categories, as specified in 326 IAC 2-2-1(gg)(1).

(e) Fugitive Emissions
Since this type of operation is in one of the twenty-eight (28) listed source categories under 326 IAC 2-2 or 326 IAC 2-3, fugitive emissions are counted toward the determination of PSD and Emission Offset applicability.

Source Status

The table below summarizes the potential to emit of the entire source, prior to the proposed modification, after consideration of all enforceable limits established in the effective permits:

Pollutant	Emissions (tons/year)
PM	Greater than 100
PM10	Greater than 100
SO_2	Greater than 100
VOC	Greater than 100
CO	Greater than 100
NO_x	Greater than 100

(a) This existing source is a major stationary source, under PSD (326 IAC 2-2), because a regulated pollutant is emitted at a rate of 100 tons per year or more, and it is in one of the twenty-eight (28) listed source categories, as specified in 326 IAC 2-2-1(gg)(1).

(b) These emissions are based upon the Title V permit (T129-7742-00037), issued on August 22, 2003.

The table below summarizes the potential to emit HAPs for the entire source, prior to the proposed modification, after consideration of all enforceable limits established in the effective permits:

HAPs	Potential To Emit (tons/year)
Single HAP	Greater than 10
TOTAL	Greater than 25

This existing source is a major source of HAPs, as defined in 40 CFR 63.41, because HAP emissions are greater than ten (10) tons per year for a single HAP and greater than twenty-five (25) tons per year for a combination of HAPs. Therefore, this source is a major source under Section 112 of the Clean Air Act (CAA).

Actual Emissions

The following table shows the actual emissions from the source. This information reflects the 2006 OAQ emission data.

Pollutant	**Actual Emissions** (ton/yr)
PM	55
PM_{10}	55
SO_2	906
VOC	171
CO	172
NO_X	365
HAP	Not Reported
Total HAPs	Not Reported

Description of Proposed Modification

The Office of Air Quality (OAQ) has reviewed a modification application, submitted by Countrymark Cooperative, LLP on August 20, 2008, relating to the construction and operation of a Low Sulfur Gasoline (LSG) Unit. The purpose of this unit is to remove sulfur from the gasoline stream produced in the Fluid Catalytic Cracking Unit (FCCU). The LSG Unit will be located just prior to the blending process. Excess gases will be routed to the Main Refinery Flare; by-product will be routed to the Tail Gas Treatment System and Sulfur Recovery System. The following is a list of the proposed emission units:

(a) One (1) Low Sulfur Gasoline (LSG) Unit consisting of the following equipment:

(1) LSG Reactor Charge Heater (810-H101) approved for construction in 2008, with a maximum capacity of 5.985 MMBtu, combusting refinery fuel gas only, and venting to stack 128.

Under 40 CFR Part 60, Subpart Ja (currently under stay) the LSG Reactor Charge Heater is considered an affected facility.

(2) #5 Cooling Tower with a maximum capacity of 3,600 gpm approved for construction in 2008.

(3) LSG Unit components and drains (800 valves, 16 drains, and 5 pumps) approved for construction in 2008.

Under 40 CFR 63, Subpart CC, equipment leaks associated with a petroleum refinery are considered as an affected facility.

Under 40 CFR 60, Subpart QQQ, new and existing drains are considered affected facilities at a petroleum refinery.

Under 40 CFR 60, Subpart GGGa, valves are considered affected facilities at a petroleum refinery.

Under 40 CFR 61 Subpart FF new and existing drains are considered affected facilities for benzene waste operations.

Increased Utilization:

The LSG Unit will remove sulfur from the gasoline stream just prior to the gasoline blending process to ensure compliance with the small refiner low-sulfur gasoline standards. Therefore, the LSG Unit will not create any increased utilization from upstream units or affect the capacity of the plant.

If the source is required to take the LSG Unit offline the feedstock from the Fluid Catalytic Cracking Unit (FCCU) will be temporarily stored in Storage Tank #40. Storage Tank #40's prior usage was the storage of hydrocarbon with vapor pressure equal to or less than the vapor pressure of 13 RVP gasoline. Storage Tank #40 will be used solely for the storage of RVP 15 Gasoline while the LSG Unit is down. Pursuant to 326 IAC 2-2-1(rr)(2)(B) in lieu of performing an ATPA evaluation for Storage Tank #40 the source has opted to use PTE.

The Main Refinery Flare, identified as RCD-1, will be used to provide intermittent relief from the LSG Unit as necessary. There will be no modifications made to the Main Refinery Flare, identified as RCD-1.

There will be a slight increase in steam demand from No. 1 - 4 boilers.

The by-product from the LSG Unit will be routed to the Tail Gas Treatment System and Sulfur Recovery System identified as 124, creating a slight increase to its sulfur loading.

The LSG Unit creates an additional demand to the cooling water system. The existing refinery cooling water system is marginally adequate to meet the needs for its existing production capacity. The #5 Cooling Tower will have a capacity of 3,600 gpm and will be used to reduce demand on the #1 Cooling Tower. The cooling water requirements for the CCR/Platformer, Penex, and Unifiner units will be met by the new #5 Cooling Tower; therefore the #1 Cooling Tower will be converted to exclusively service the FCC.

The source states that the CCR/Platformer, Penex, and Unifiner units will not be able to achieve a capacity increase based solely on these Cooling Tower Modifications. The source also states that there are physical bottlenecks that exist in several of these units that would prevent capacity increases without additional capital investments and permitting. These bottlenecks are summarized in the following:

(a) The FCC Unit capacity is limited by air blower capacity to the regenerator.

(b) The CCR/Platformer Units are limited by the capacity of the Continuous Catalyst Regeneration system.

(c) The Penex Unit is limited by the feed drier and product stabilizer hydraulic capacity.

(d) The Unifiner Unit is limited by the bottlenecks in the downstream Platformer and Penex Units.

Enforcement Issues

There are no pending enforcement actions related to this modification.

Stack Summary

Stack ID	Operation	Height (ft)	Diameter (ft)	Flow Rate (acfm)	Temperature (^{0}F)
128	LSG Reactor Charge Heater (810-H101)	75	2.5	3630	690

Emission Calculations

See Appendix A of this Technical Support Document for detailed emission calculations.

Permit Level Determination – Part 70

Pursuant to 326 IAC 2-1.1-1(16), Potential to Emit is defined as “the maximum capacity of a stationary source or emission unit to emit any air pollutant under its physical and operational design. Any physical or operational limitation on the capacity of a source to emit an air pollutant, including air pollution control equipment and restrictions on hours of operation or type or amount of material combusted, stored, or processed shall be treated as part of its design if the limitation is enforceable by the U. S. EPA, IDEM, or the appropriate local air pollution control agency.”

The following table is used to determine the appropriate permit level under 326 IAC 2-7-10.5. This table reflects the PTE before controls. Control equipment is not considered federally enforceable until it has been required in a federally enforceable permit.

Total PTE Change due to the Modification

Pollutant	PTE New Emission Units (ton/yr)
PM	3.31
PM_{10}	3.31
$PM_{2.5}$	3.31
SO_2	.93
VOC	1.34
CO	2.74
NO_X	1.63
HAPs	.06

This source modification is subject to 326 IAC 2-7-10.5(d)(5) because the modification is subject to new source performance standards (NSPS) and a national emission standard for hazardous air pollutants (NESHAP). Additionally, the modification will be incorporated into the Part 70 Operating Permit through a significant permit modification issued pursuant to 326 IAC 2-7-12(d)(1) because the modification requires significant changes in existing monitoring Part 70 permit terms and conditions. Additionally, the modification will be incorporated into the Part 70 Operating Permit through a significant permit modification issued pursuant to 326 IAC 2-7-12(d), because the modification incorporates applicable portions of 40 CFR 60, Subpart GGGa and Ja. It also incorporates applicable portions of 40 CFR 61, Subpart FF.

Permit Level Determination – PSD or Emission Offset

The table below summarizes the potential to emit, reflecting all limits, of the emission units. Any control equipment is considered federally enforceable only after issuance of this Part 70 source modification, and only to the extent that the effect of the control equipment is made practically enforceable in the permit.

	Potential to Emit (ton/yr)					
Process / Emission Unit	**PM**	**PM_{10}**	**SO_2**	**VOC**	**CO**	**NO_X**
LSG Reactor Charge Heater (new PTE)	.25	.25	.93	.18	2.74	1.63
SRU/TGTU (increased input)			.13			
Tank 40 (change to stored material; new PTE)				7.87		
Fugitives (new PTE)				.50		
Boiler (increased steam demand)	.30	.30	1.13	.22	3.32	3.96
Cooling Tower (new PTE)	3.06	3.06		.66		
Total for Modification	3.61	3.61	2.19	9.43	6.06	5.59
Major Source Threshold	25	10	40	40	100	40

This modification to an existing major stationary source is not major because the emissions increase is less than the PSD significant levels. Therefore, pursuant to 326 IAC 2-2, the PSD requirements do not apply.

Federal Rule Applicability Determination

The following federal rules are applicable to the source due to this modification:

NSPS:

(a) Countymark Cooperative, LLP is subject to the New Source Performance Standard for Standards of Performance for Petroleum Refineries for Which Construction, Reconstruction, or Modification Commenced After May 14, 2007 (40 CFR 60.100a, Subpart Ja), which is incorporated by reference as 326 IAC 12. 40 CFR 60, Subpart Ja is stayed until September 26, 2008. The following units are subject to this rule:

(1) LSG Reactor Charge Heater (810-H101) with a maximum capacity of 5.985MMBtu to be constructed in June of 2009 venting to stack 128; and

(2) One (1) Main Refinery Flare, identified as RCD-1 with a maximum heat input rate of 371 MMBtu/hr of refinery fuel gas/process gas (with capacity for a supplementary pilot fuel heat input rate of 3.0 MMBtu/hr), installed in 1945 and replaced in 2006 and exhausting to stack 118.

Countymark Cooperative, LLP is subject to the following portions of Subpart Ja:

(1) 40 CFR 60.100a

(2) 40 CFR 60.101a

(3) 40 CFR 60.102a(g)

(4) 40 CFR 60.103a(a)(b)

(5) 40 CFR 60.104a(j)(4)(iv)

(6) 40 CFR 60.107a(a)(2)(d)(e)

(7) 40 CFR 60.108a

(8) If the rule language should change after the stay the changes shall also apply.

Pursuant to 40 CFR 60.1, the Permittee shall comply with the provisions of 40 CFR Part 60, Subpart A – General Provisions, which are incorporated by reference as 326 IAC 12, except as otherwise specified in 40 CFR Part 60, Subpart Ja.

(b) Countymark Cooperative, LLP is subject to the New Source Performance Standard for Standards of Performance for Equipment Leaks of VOC in Petroleum Refineries for Which Construction, Reconstruction, or Modification Commenced After November 7, 2006 (40 CFR 60.590a, Subpart GGGa), which is incorporated by reference as 326 IAC 12. The following unit is subject to this rule:

LSG Unit components and drains (800 valves, 16 drains, and 5 pumps) to be constructed in June of 2009.

Countymark Cooperative, LLP is subject to the following portions of Subpart GGGa:

(1) 40 CFR 60.590a

(2) 40 CFR 60.591a

(3) 40 CFR 60.592a

Pursuant to 40 CFR 60.1, the Permittee shall comply with the provisions of 40 CFR Part 60, Subpart A – General Provisions, which are incorporated by reference as 326 IAC 12, except as otherwise specified in 40 CFR Part 60, Subpart GGGa.

(c) Countymark Cooperative, LLP is subject to the New Source Performance Standard for Standards of Performance for VOC Emissions From Petroleum Refinery Wastewater

Systems (40 CFR 60.690, Subpart QQQ), which is incorporated by reference as 326 IAC 12. The following unit is subject to this rule:

LSG Unit components and drains (800 valves, 16 drains, and 5 pumps) to be constructed in June of 2009.

Countymark Cooperative, LLP is subject to the following portions of Subpart QQQ:

(1) 40 CFR 60.690

(2) 40 CFR 60.691

(3) 40 CFR 60.692-1

(4) 40 CFR 60.692-2

(5) 40 CFR 60.692-4

(6) 40 CFR 60.695

(7) 40 CFR 60.696

(8) 40 CFR 60.697

(9) 40 CFR 60.698

Pursuant to 40 CFR 60.1, the Permittee shall comply with the provisions of 40 CFR Part 60, Subpart A – General Provisions, which are incorporated by reference as 326 IAC 12, except as otherwise specified in 40 CFR Part 60, Subpart QQQ.

NESHAP:

(d) Countymark Cooperative, LLP is subject to the National Emission Standard for Benzene Waste Operations (40 CFR 61.340, Subpart FF). The units subject to this rule include the following:

LSG Unit components and drains (800 valves, 16 drains, and 5 pumps) to be constructed in June of 2009.

Countymark Cooperative, LLP is subject to the following portions of Subpart FF:

(1) 40 CFR 61.340

(2) 40 CFR 61.341

(3) 40 CFR 61.342(a)

(4) 40 CFR 61.355

(5) 40 CFR 61.356(a)(b)(1)

(6) 40 CFR 61.357(a)(c)

The provisions of 40 CFR 61 Subpart A - General Provisions, which are incorporated as 326 IAC 14-1-1, apply to the facility described in this section except when otherwise specified in 40 CFR 61 Subpart FF.

(e) Countymark Cooperative, LLP is subject to the National Emission Standards for Hazardous Air Pollutants From Petroleum Refineries (40 CFR 63.640, Subpart CC),

which is incorporated by reference as 326 IAC 20-16. The units subject to this rule, each new and existing facility that is a major source of hazardous air pollutants (HAP), as defined in 40 CFR 63.2, at which petroleum refineries are operated, include the following:

LSG Unit components and drains (800 valves, 16 drains, and 5 pumps) to be constructed in June of 2009.

Countymark Cooperative, LLP is subject to the following portions of Subpart CC:

(1) 40 CFR 63.640

(2) 40 CFR 63.641

(3) 40 CFR 63.642

(4) 40 CFR 63.648(a)

(5) 40 CFR 63.654(d)(e)

The provisions of 40 CFR 63 Subpart A - General Provisions, which are incorporated as 326 IAC 20-1-1, apply to the facility described in this section except when otherwise specified in 40 CFR 63 Subpart CC.

CAM:

(f) Pursuant to 40 CFR 64.2, Compliance Assurance Monitoring (CAM) is applicable to each new or modified emission unit that involves a pollutant-specific emission unit and meets the following criteria:

(1) has a potential to emit before controls equal to or greater than the Part 70 major source threshold for the pollutant involved;

(2) is subject to an emission limitation or standard for that pollutant; and

(3) uses a control device, as defined in 40 CFR 64.1, to comply with that emission limitation or standard.

No emissions from the modification have the potential to emit before controls equal to or greater than the Part 70 major source thresholds. None of the new emissions units utilize a control device. Based on this evaluation, the requirements of 40 CFR Part 64, CAM are not applicable to any of the new and modified units as part of this modification.

State Rule Applicability Determination

State Rule Applicability - Entire Source

326 IAC 2-2 (Prevention of Significant Deterioration)

This existing source is a major stationary source because it is one of the 28 listed source categories (i.e. petroleum refineries) under 326 IAC 2-2, and potential sulfur dioxide (SO_2) volatile organic compound (VOC), carbon monoxide (CO), particulate matter (PM & PM-10) and nitrogen oxide (NOx) emissions after control are greater than 100 tons per year. This modification to an existing major stationary source is not major because the emissions increase is less than the applicable PSD significant threshold levels. Therefore, pursuant to 326 IAC 2-2, the PSD requirements do not apply.

326 IAC 5-1 (Opacity Limitations)

Pursuant to 326 IAC 5-1-2 (Opacity Limitations), except as provided in 326 IAC 5-1-3 (Temporary Alternative Opacity Limitations), opacity shall meet the following, unless otherwise stated in this permit:

(a) Opacity shall not exceed an average of forty percent (40%) any one (1) six (6) minute averaging period as determined in 326 IAC 5-1-4.

(b) Opacity shall not exceed sixty percent (60%) for more than a cumulative total of fifteen (15) minutes (sixty (60) readings as measured according to 40 CFR 60, Appendix A, Method 9 or fifteen (15) one (1) minute non-overlapping integrated averages for a continuous opacity monitor) in a six (6) hour period.

State Rule Applicability - Individual Facilities

326 IAC 2-4.1-1 (New Source Toxics Control)

326 IAC 2-4.1-1 applies to new or reconstructed facilities with potential emissions of any single HAP equal or greater than ten (10) tons per twelve (12) month period and potential emissions of a combination of HAPs greater than or equal to twenty-five (25) tons per twelve (12) month period. This modification is not subject to 326 IAC 2-4.1-1 (New Source Toxics Control) because the potential to emit of single HAP and total HAPs is less than 10 and 25 tons per year, respectively.

326 IAC 8-1-6 (New Facilities, General Reduction Requirements)

Rule 8-1-6 applies to new facilities (as of January 1, 1980) which have potential emissions of 25 tons or more per year of volatile organic compounds (VOC). The potential VOC emissions from Low Sulfur Gasoline (LSG) Unit are below the twenty-five (25) tons per year applicability threshold and therefore, not subject to the requirements of 326 IAC 8-1-6.

326 IAC 6-2-4 (Particulate Emissions Limitations for sources of indirect heating)

Pursuant to 326 IAC 6-2-4 (Particulate Matter Emissions Limitations), particulate emissions from the 5.985 MMBtu/hr LSG Charge Reactor Heater shall not exceed Pt. This limitation is calculated using the following equation:

$$Pt = \frac{1.09}{Q^{0.26}}$$

Pt = Pounds of particulate matter emitted per million Btu (lb/MMBtu) heat input.

Q = Total source maximum operating capacity rating in million Btu per hour (MMBtu/hr) heat input. (Q > 10,000 MMBtu)

Pursuant to 326 IAC 6-2-4 (Particulate Emission Limitations for Sources of Indirect Heating), for Q> 10,000 MMBtu, Pt shall not exceed 0.1. Therefore, particulate emissions from the 5.985 MMBtu/hr LSG Charge Reactor Heater shall be limited to 0.1 pounds per MMBtu heat input.

Compliance Determination and Monitoring Requirements

Permits issued under 326 IAC 2-7 are required to ensure that sources can demonstrate compliance with all applicable state and federal rules on a continuous basis. All state and federal rules contain compliance provisions; however, these provisions do not always fulfill the requirement for a continuous demonstration. When this occurs, IDEM, OAQ, in conjunction with the source, must develop specific conditions to satisfy 326 IAC 2-7-5. As a result, Compliance Determination Requirements are included in the permit. The Compliance Determination Requirements in Section D of the permit are those conditions that are found directly within state and federal rules and the violation of which serves as grounds for enforcement action.

If the Compliance Determination Requirements are not sufficient to demonstrate continuous compliance, they will be supplemented with Compliance Monitoring Requirements, also in Section D of the permit. Unlike Compliance Determination Requirements, failure to meet Compliance Monitoring conditions would serve as a trigger for corrective actions and not grounds for enforcement action. However, a violation in relation to a compliance monitoring condition will

arise through a source's failure to take the appropriate corrective actions within a specific time period.

Changes to the compliance determination and monitoring requirements are detailed in the Proposed Changes section of this document.

Proposed Changes

The changes listed below have been made to Part 70 Operating Permit No. T129-7882-00003. Deleted language appears as ~~strikethroughs~~ and new language appears in **bold**:

Change #1 Section A.3 has been updated to include the addition and modification of the emission units as follows:

...

(d) The following storage vessels:

...

40	fixed roof cone tank/internal floating roof tank,/mechanical primary seal	2,222,388	336,000	~~hydrocarbon with vapor pressure equal to or less than the vapor pressure of 13 RVP gasoline,~~ **RVP 15 Gasoline**	1949	-	051;

...

(e) One (1) Main Refinery Flare, identified as RCD-1 with a maximum heat input rate of 371 mmBtu/hr of refinery fuel gas/process gas (with capacity for a supplementary pilot fuel heat input rate of 3.0 mmBtu/hr), installed in 1945 and replaced in 2006 and exhausting to stack 118;

Under 40 CFR Part 60, Subpart Ja (currently under stay) the Main Refinery Flare is considered an affected facility.

...

(qq) One (1) Low Sulfur Gasoline (LSG) Unit consisting of the following equipment:

(1) LSG Reactor Charge Heater (810-H101) approved for construction in 2008, with a maximum capacity of 5.985 MMBtu, combusting refinery fuel gas only, and venting to stack 128.

Under 40 CFR Part 60, Subpart Ja (currently under stay) the LSG Reactor Charge Heater is considered an affected facility.

(2) #5 Cooling Tower with a maximum capacity of 3,600 gpm approved for construction in 2008.

(3) LSG Unit components and drains (800 valves, 16 drains, and 5 pumps) approved for construction in 2008.

Under 40 CFR 63, Subpart CC, equipment leaks associated with a petroleum refinery are considered as an affected facility.

Under 40 CFR 60, Subpart QQQ, new and existing drains are considered affected facilities at a petroleum refinery.

Under 40 CFR 60, Subpart GGGa, valves are considered affected facilities at a petroleum refinery.

Under 40 CFR 61 Subpart FF new and existing drains are considered affected facilities for benzene waste operations.

Change #2 D sections have been updated to include the addition and modification of the emission units as follows:

SECTION D.3 FACILITY OPERATION CONDITIONS

Facility Description [326 IAC 2-7-5(15)]:

(d) The following storage vessels:

Tank ID	Tank Description	Max. Capacity (gallons)	Max. Withdrawal Rate (gal/hr)	Material Stored	Construction Date	NSPS and NESHAP applicability	Stack ID
...							
40	fixed roof cone tank/internal floating roof tank,/mechanical primary seal	2,222,388	336,000	~~hydrocarbon with vapor pressure equal to or less than the vapor pressure of 13 RVP gasoline,~~**RVP 15 Gasoline**	1949	-	051;
...							

SECTION D.4 FACILITY OPERATION CONDITIONS

Description [326 IAC 2-7-5(15)]:

...

(mm) Fugitive emissions from the Hydrotreater unit, Amine Unit, Sulfur Recovery Unit, Tail Gas Treatment Unit consisting of: Under 40 CFR 60, Subpart GGG, equipment associated with the sampling connection system is considered an affected source at a petroleum refinery. Under 40 CFR 63, Subpart CC, equipment leaks from storage vessels and equipment leaks associated with a bulk gasoline terminal are considered affected sources.

(1) pipeline Valves - Gas, identified as 090.
(2) pipeline Valves - Light Liquid, identified as 091.
(3) pipeline Valves - Heavy Liquid, identified as 092.
(4) pipeline Valves - Hydrogen, identified as 093.
(5) open Ended Valves, identified as 094.
(6) Miscellaneous (Sampling, Blowing, Purging, etc.), identified as 073.
(7) flanges, identified as 095.
(8) pump Seals Light Liquid, identified as 096.
(9) pump Seals Heavy Liquid, identified as 097.
(10) compressor Seals - Gas, identified as 098.
(11) compressor Seals - Heavy Liquid, identified as 099.
(12) drains, identified as 100.
(13) vessel Relief Valves, identified as 101.
(14) cooling Towers, identified as 119.

(qq) One (1) Low Sulfur Gasoline (LSG) Unit consisting of the following equipment:

(1) LSG Reactor Charge Heater (810-H101) approved for construction in 2008, with a maximum capacity of 5.985 MMBtu, combusting refinery fuel gas only, and venting

to stack 128.

Under 40 CFR Part 60, Subpart Ja (currently under stay) the LSG Reactor Charge Heater is considered an affected facility.

(2) #5 Cooling Tower with a maximum capacity of 3,600 gpm approved for construction in 2008.

(3) LSG Unit components and drains (800 valves, 16 drains, and 5 pumps) approved for construction in 2008.

Under 40 CFR 63, Subpart CC, equipment leaks associated with a petroleum refinery are considered as an affected facility.

Under 40 CFR 60, Subpart QQQ, new and existing drains are considered affected facilities at a petroleum refinery.

Under 40 CFR 60, Subpart GGGa, valves are considered affected facilities at a petroleum refinery.

Under 40 CFR 61 Subpart FF new and existing drains are considered affected facilities for benzene waste operations.

(The information describing the process contained in this emissions unit description box is descriptive information and does not constitute enforceable conditions.)

SECTION D.5 FACILITY OPERATION CONDITIONS

Description [326 IAC 2-7-5(15)]:

(e) One (1) Main Refinery Flare, identified as RCD-1 with a maximum heat input rate of 371 mmBtu/hr of refinery fuel gas/process gas (with capacity for a supplementary pilot fuel heat input rate of 3.0 mmBtu/hr), installed in 1945 and replaced in 2006 and exhausting to stack 118;

Under 40 CFR Part 60, Subpart Ja (currently under stay) the Main Refinery Flare is considered an affected facility.

...

(qq) One (1) Low Sulfur Gasoline (LSG) Unit consisting of the following equipment:

(1) LSG Reactor Charge Heater (810-H101) approved for construction in 2008, with a maximum capacity of 5.985 MMBtu, combusting refinery fuel gas only, and venting to stack 128.

Under 40 CFR Part 60, Subpart Ja (currently under stay) the LSG Reactor Charge Heater is considered an affected facility.

(2) #5 Cooling Tower with a maximum capacity of 3,600 gpm approved for construction in 2008.

(3) LSG Unit components and drains (800 valves, 16 drains, and 5 pumps) approved for construction in 2008.

Under 40 CFR 63, Subpart CC, equipment leaks associated with a petroleum refinery are considered as an affected facility.

Under 40 CFR 60, Subpart QQQ, new and existing drains are considered affected facilities at a petroleum refinery.

Under 40 CFR 60, Subpart GGGa, valves are considered affected facilities at a petroleum refinery.

Under 40 CFR 61 Subpart FF new and existing drains are considered affected facilities for benzene waste operations.

(The information describing the process contained in this emissions unit description box is descriptive information and does not constitute enforceable conditions.)

Emission Limitations and Standards [326 IAC 2-7-5(1)]

D.5.1 Particulate Matter (PM)

Pursuant to 326 IAC 6-2-3 (Particulate Matter Emission Limitations for Sources of Indirect Heating, the PM emissions from boilers B1, B2 and B3 shall be limited to 0.40, 0.25 and 0.40 pounds per MMBtu heat input, respectively.

This limitation is based on the following equation:

$$P_T = \frac{C \times a \times h}{76.5 \times Q^{0.75} \times N^{0.25}}$$

Where: C = maximum ground level concentration (50 µg/m3, for a period not to exceed 60 min.)
Pt = maximum allowable particulate matter (PM) emitted per MMBtu heat input
Q = total source max. indirect heater input

N = Number of stacks in fuel burning operation.

a = plume rise factor (0.67, for Q < 1,000)

h = Stack height in feet. If a number of stacks of different heights exist, the average stack height to represent "N" stacks shall be calculated by weighing each stack height with its particulate matter emission rate as follows:

$$h = \frac{\sum_{i=1}^{N} H_i \times pa_i \times Q}{\sum_{i=1}^{N} pa_i \times Q}$$

Where: pa = the actual controlled emission rate in lb/mmBtu using the emission factor from AP-42 or stack test data.

D.5.2 Particulate Matter (PM) [326 IAC 6-2-4]

Pursuant to 326 IAC 6-2-4 (Particulate Matter Emissions Limitations), particulate emissions from the 5.985 MMBtu/hr LSG Charge Reactor Heater shall not exceed 0.1 pounds per MMBtu heat input.

D.5.~~2~~**3** Sulfur Dioxide (SO_2) [326 IAC 7-1.1-1] [326 IAC 7-2-1]

Pursuant to 326 IAC 7-1.1 (SO_2 Emissions Limitations) the SO_2 emissions from the emission units C-II, boilers Nos. 1, 2 and 3, V-IV, A-HI, H101, and V-III, when burning No. 6 residual fuel oil, shall not exceed 1.6 pounds per MMBtu heat input. Pursuant to 326 IAC 7-2-1, compliance shall be demonstrated on a thirty (30) day rolling weighted average.

...

(All subsequent conditions were renumbered)

Change #3 New E sections have been added to include the addition of new (NSPS) New Source Performance Standards and (NESHAP) National Emissions Standards for Hazardous Air Pollutants as follows:

SECTION E.4 FACILITY OPERATION CONDITIONS

Facility Description [326 IAC 2-7-5(15)]

(qq) One (1) Low Sulfur Gasoline (LSG) Unit consisting of the following equipment:

(1) to LSG Reactor Charge Heater (810-H101) approved for construction in 2008, with a maximum capacity of 5.985 MMBtu, combusting refinery fuel gas only, and venting stack 128.

Under 40 CFR Part 60, Subpart Ja (currently under stay) the LSG Reactor Charge Heater is considered an affected facility.

(2) #5 Cooling Tower with a maximum capacity of 3,600 gpm approved for construction in 2008.

(3) LSG Unit components and drains (800 valves, 16 drains, and 5 pumps) approved for construction in 2008.

Under 40 CFR 63, Subpart CC, equipment leaks associated with a petroleum refinery are considered as an affected facility.

Under 40 CFR 60, Subpart QQQ, new and existing drains are considered affected facilities at a petroleum refinery.

Under 40 CFR 60, Subpart GGGa, valves are considered affected facilities at a petroleum refinery.

Under 40 CFR 61 Subpart FF new and existing drains are considered affected facilities for benzene waste operations.

(The information describing the process contained in this facility description box is descriptive information and does not constitute enforceable conditions.)

E.4.1 General Provisions Relating to NESHAP Subpart FF [40 CFR Part 61, Subpart A]

Pursuant to 40 CFR 61.340, the Permittee shall comply with the provisions of 40 CFR Part 61, Subpart A – General Provisions, which are incorporated by reference as 326 IAC 14-1-1, except as otherwise specified in 40 CFR Part 61, Subpart FF.

E.4.2 Benzene Waste Operations NESHAP [40 CFR Part 61, Subpart FF]

The Permittee which engages benzene waste operations shall comply with the following provisions of 40 CFR Part 61, Subpart FF (included as Attachment A of this permit).

(1) 40 CFR 61.340
(2) 40 CFR 61.341
(3) 40 CFR 61.342(a)
(4) 40 CFR 61.355
(5) 40 CFR 61.356(a)(b)(1)
(6) 40 CFR 61.357(a)(c)

SECTION E.5 FACILITY OPERATION CONDITIONS

Facility Description [326 IAC 2-7-5(15)]

(qq) One (1) Low Sulfur Gasoline (LSG) Unit consisting of the following equipment:

(1) LSG Reactor Charge Heater (810-H101) approved for construction in 2008, with a maximum capacity of 5.985 MMBtu, combusting refinery fuel gas only, and venting to stack 128.

Under 40 CFR Part 60, Subpart Ja (currently under stay) the LSG Reactor Charge Heater is considered an affected facility.

(2) #5 Cooling Tower with a maximum capacity of 3,600 gpm approved for construction in 2008.

(3) LSG Unit components and drains (800 valves, 16 drains, and 5 pumps) approved for construction in 2008.

Under 40 CFR 63, Subpart CC, equipment leaks associated with a petroleum refinery are considered as an affected facility.

Under 40 CFR 60, Subpart QQQ, new and existing drains are considered affected facilities at a petroleum refinery.

Under 40 CFR 60, Subpart GGGa, valves are considered affected facilities at a petroleum refinery.

Under 40 CFR 61 Subpart FF new and existing drains are considered affected facilities for benzene waste operations.

(The information describing the process contained in this facility description box is descriptive information and does not constitute enforceable conditions.)

E.5.1 General Provisions Relating to NSPS Subpart GGGa [40 CFR Part 60, Subpart A]

Pursuant to 40 CFR 60.1, the Permittee shall comply with the provisions of 40 CFR Part 60, Subpart A – General Provisions, which are incorporated by reference as 326 IAC 12, except as otherwise specified in 40 CFR Part 60, Subpart GGGa.

E.5.2 Standards of Performance for Equipment Leaks of VOC in Petroleum Refineries for Which Construction, Reconstruction, or Modification Commenced After November 7, 2006 NSPS [40 CFR Part 60, Subpart GGGa]

The Permittee which engages in petroleum refineries for which construction, reconstruction, or modification commenced after November 7, 2006 shall comply with the following provisions of 40 CFR Part 60, Subpart GGGa, (included as Attachment B of this permit).

(1) 40 CFR 60.590a

(2) 40 CFR 60.591a

(3) 40 CFR 60.592a

SECTION E.6 FACILITY OPERATION CONDITIONS

Facility Description [326 IAC 2-7-5(15)]

(e) One (1) Main Refinery Flare, identified as RCD-1 with a maximum heat input rate of 371 MMBtu/hr of refinery fuel gas/process gas (with capacity for a supplementary pilot fuel heat input rate of 3.0 MMBtu/hr), installed in 1945 and replaced in 2006 and exhausting to stack 118;

Under 40 CFR Part 60, Subpart Ja (currently under stay) the Main Refinery Flare is considered an affected facility.

(qq) One (1) Low Sulfur Gasoline (LSG) Unit consisting of the following equipment:

(1) LSG Reactor Charge Heater (810-H101) approved for construction in 2008, with a maximum capacity of 5.985 MMBtu, combusting refinery fuel gas only, and venting to stack 128.

Under 40 CFR Part 60, Subpart Ja (currently under stay) the LSG Reactor Charge Heater is considered an affected facility.

(2) #5 Cooling Tower with a maximum capacity of 3,600 gpm approved for construction in 2008.

(3) LSG Unit components and drains (800 valves, 16 drains, and 5 pumps) approved for construction in 2008.

Under 40 CFR 63, Subpart CC, equipment leaks associated with a petroleum refinery are considered as an affected facility.

Under 40 CFR 60, Subpart QQQ, new and existing drains are considered affected facilities at a petroleum refinery.

Under 40 CFR 60, Subpart GGGa, valves are considered affected facilities at a petroleum refinery.

Under 40 CFR 61 Subpart FF new and existing drains are considered affected facilities for benzene waste operations.

(The information describing the process contained in this facility description box is descriptive information and does not constitute enforceable conditions.)

E.6.1 General Provisions Relating to NSPS Subpart Ja [40 CFR Part 60, Subpart A]

Pursuant to 40 CFR 60.1, the Permittee shall comply with the provisions of 40 CFR Part 60, Subpart A – General Provisions, which are incorporated by reference as 326 IAC 12, except as otherwise specified in 40 CFR Part 60, Subpart Ja.

E.6.2 Standards of Performance for Petroleum Refineries for Which Construction, Reconstruction, or Modification Commenced After May 14, 2007 NSPS [40 CFR Part 60, Subpart Ja (Currently Under Stay Until September 26, 2008)]

The Permittee which engages in petroleum refineries for which construction, reconstruction, or modification commenced after May 14, 2007 shall comply with the following provisions of 40 CFR Part 60, Subpart Ja, (included as Attachment C of this permit).

(1) 40 CFR 60.100a

(2) 40 CFR 60.101a

(3) 40 CFR 60.102a(g)

(4) 40 CFR 60.103a(a)(b)

(5) 40 CFR 60.104a(j)(4)(iv)

(6) 40 CFR 60.107a(a)(2)(d)(e)

(7) 40 CFR 60.108a

(8) If the rule language should change after the stay the changes shall also apply.

Conclusion and Recommendation

The construction of this proposed modification shall be subject to the conditions of the attached proposed Part 70 Minor Source Modification No. 129-26889-00003 and Significant Permit Modification No. 129-26980-00003. The staff recommends to the Commissioner that this Part 70 Minor Source and Significant Permit Modification be approved.

Emissions Summary

Company Name: **Countrymark Cooperative, LLP**
Address, City IN Zip: **1200 Refinery Road, Mount Vernon, IN 47620**
Minor Source Mod: **129-26889-00003**
Significant Permit Mod **129-26980-00003**
Reviewer: Michael S. Brooks
Date: 9/22/2008

Total Estimated Net Project Potential Emission Increases and Decreases

Source	Modification	PM ton/year	PM-10 ton/year	SO2 ton/year	NOx ton/year	VOC ton/year	CO ton/year	Combined HAP ton/year	Assumptions
LSG Reactor Charge Heater	New Process Heater	0.25	0.25	0.93	1.63	0.18	2.74	0.06	5.985 MMBtu/hr
SRU/TGTU	Additional Sulfur Throughput			0.13					362 lbs/day of additional sulfur, assumed 99.9% control
Tank 40	Change in Throughput					7.87			TANKS calculation assuming 1,325 turnovers per year (operation at max. fill rate, 8,760 hr/yr) using RVP 15 gasoline.
Fugitives	Additional Components and wastewater drains					0.50		0.02	800 valves, 16 drains and 5 pumps
Boiler	Additional Refinery Fuel Gas Usage	0.30	0.30	1.13	3.96	0.22	3.32	0.07	6,000 lb/hr additional steam
Cooling Tower	New Tower	3.06	3.06			0.66			3,600 gpm circulation rate at 2,040 ppm average TDS
Total		3.60	3.60	2.19	5.59	9.42	6.06	0.15	
PSD Significance Level		25	10*	40	40	40	100		
PSD Triggered		No	No	No	No	No	No		

* The significant emissions rates for major modifications under PSD and nonattainment NSR are 10 TPY for direct PM2.5.
Since PM10 is used as a surrogate for PM2.5 the PSD significant level shall be 10 TPY.

Company Name: **Countrymark Cooperative, LLP**
Address, City IN Zip: **1200 Refinery Road, Mount Vernon, IN 47620**
Minor Source Mod: **129-26889-00003**
Significant Permit Mod **129-26980-00003**
Reviewer: Michael S. Brooks
Date: 9/22/2008

810-H101 - LSG Reactor Charge Heater

5.985 MMBtu/hour
805 Btu/cf
65.13 MMcf/year

Point	MMCF Burned	Em Factor (multiply by %S)	%S	Emission Factor SO2	SO2	CO Emission Factor	CO	NOX Emission Factor	NOx	PM10 Emission Factor	PM10	PM Emission Factor	PM	VOC Emission Factor	VOC
				(lb/MMCF)	(tpy)	(lb/MMCF)	(tpy)	(lb/MMCF)	(tpy)	(lb/MMCF)	(tpy)	(lb/MMCF)	(tpy)	(lb/MMCF)	(tpy)
New LSG Reactor Charge Heater	65.13	950	0.03	28.50	0.93	84	2.74	50	1.63	7.6	0.25	7.6	0.25	5.5	0.18

Emission Factor Source - AP-42 Section 1.4 7/98 natural gas, except SO2 - AIRS for refinery fuel gas
%S is 0.03 at NSPS limit of 162 ppm H2S
RFG heating value = 805 BTU/cubic feet (2007 average low heating values)

NOx from vendor guarantee - 0.025 lb/MMBtu. AP-42 low Nox burner emission factor used as conservative estimate.

HAP	lb/MMCF	ton/yr
Benzene	0.0021	6.84E-05
Hexane	1.8	5.86E-02
Naphthalene	0.00061	1.99E-05
Toluene	0.0034	1.11E-04
		5.88E-02

Emission Factor Source - AP-42 Section 1.4 7/98

Company Name: **Countrymark Cooperative, LLP**
Address, City IN Zip: **1200 Refinery Road, Mount Vernon, IN 47620**
Minor Source Mod: **129-26889-00003**
Significant Permit Mod **129-26980-00003**
Reviewer: Michael S. Brooks
Date: 9/22/2008

Increase in steam usage due to the LSG Unit

6,000 pounds per hour of increased high pressure steam throughput
1 lb steam = 970 Btu (output)
0.8 Btu (output) = 1 Btu (input)

Increase in Boiler usage = (6,000 lb/hour) x (970 Btu output/1 lb steam) x (1 Btu input/0.8 Btu output) x (1 cf/805 Btu)
Increase in Boiler usage = 9,037 cf/hour
Increase in Boiler usage = 79.17 mmcf/year

Point	MMCF Burned	Emission Factor SO2	SO2	CO Emission Factor	CO	NOX Emission Factor	NOx	PM10 Emission Factor	PM10	PM Emission Factor	PM	VOC Emission Factor	VOC
		(lb/MMCF)	(tpy)	(lb/MMCF)	(tpy)	(lb/MMCF)	(tpy)	(lb/MMCF)	(tpy)	(lb/MMCF)	(tpy)	(lb/MMCF)	(tpy)
Increased Boiler Usage	79.17	28.500	1.13	84	3.32	100	3.96	7.6	0.30	7.6	0.30	5.5	0.22

Emission Factor Source - AP-42 Section 1.4 7/98 natural gas, except for SO2, AIRS 950 x %S
%S is 0.03 at NSPS limit of 162 ppm H2S
Negligible HAP emissions

HAP	lb/MMCF	ton/yr
Benzene	0.0021	8.31E-05
Hexane	1.8	7.12E-02
Naphthalene	0.00061	2.41E-05
Toluene	0.0034	1.35E-04
		7.15E-02

Emission Factor Source - AP-42 Section 1.4 7/98

Company Name: **Countrymark Cooperative, LLP**
Address, City IN Zip: **1200 Refinery Road, Mount Vernon, IN 47620**
Minor Source Mod: **129-26889-00003**
Significant Permit Mod **129-26980-00003**
Reviewer: Michael S. Brooks
Date: 9/22/2008

ADDITIONAL EQUIPMENT - PROJECT TOTAL

Process unit pumps assumed to be leak free (dual seals).
Manholes assumed to be closed with tightly fitting covers.
Drains assumed to be controlled.

Equipment Type/Leak Assumptions	Count	Screening Value (SV)	VOC, lb/hr	VOC, ton/yr	Emission Factor	Emission Factor Source*
Light liquid and vapor - Valve	800					
Default - zero	800	0	0.0138	0.06	7.8 x 10 -6 kg/hr/source	Table 2-12 Valves/all service
Assume 2% leaking @ 10,000 ppm	16	10000	0.0779	0.34	2.29 x 10-6 x SV^0.746 kg/hr	Table 2-10 Valves/all service
Light liquid and vapor - Pumps						
Default - zero	5	0	0.0003	0.00	2.4 x 10-5 kg/hr/source	Table 2-12 Pumps/all service
Assume 1% leaking @ 10,000 ppm		10000	0.0000	0.00	5.03 x 10-5 x SV^0.610 kg/hr	Table 2-10 Pumps/all service
				0.40	Valves, pumps total	
Wastewater system						
Drains, 50% control for water seal	16		0.0219	0.10	0.012 ton/yr /drain	QQQ Background document, 4.1.1.2
Junction Boxes, 50% control for water seal			0.0000	0.00	0.31 ton/yr/box	QQQ Background document, 3.2.1.6
				0.10	Wastewater total	
Total			**0.114**	**0.50**		

* - Protocol for Equipment Leak Emission Estimates, EPA-453-R-95-017, November 1995

Gasoline*	Vapor Mass Fraction	Drains	Light Liquid and Vapor Valves and Pumps
Benzene	0.003	2.82E-04	1.18E-03
Ethylbenzene	0.001	7.75E-05	3.25E-04
Toluene	0.007	6.47E-04	2.71E-03
Xylene	0.004	3.63E-04	1.52E-03
n-Hexane	0.0088	8.47E-04	3.55E-03
Cyclohexane	0.0032	3.11E-04	1.30E-03
Naphthalene	0.000	9.60E-06	4.02E-05
Isopropyl benzene (cumene)	0.00014	1.35E-05	5.67E-05
2,2,4-Trimethylpentane	0.00447	4.29E-04	1.80E-03
Total		2.98E-03	1.25E-02

* Gasoline speciation assumed for light liquid and vapor streams, liquid concentration information from 2007/2008 Countrymark product analysis was input into the TANKS program and speciated emissions were calculated by TANKS.

Company Name: **Countrymark Cooperative, LLP**
Address, City IN Zip: **1200 Refinery Road, Mount Vernon, IN 47620**
Minor Source Mod: **129-26889-00003**
Significant Permit Mod **129-26980-00003**
Reviewer: Michael S. Brooks
Date: 9/22/2008

#5 Cooling Tower

Circulation Rate (gal/min)		3,600
Annual Operating Hours (hr/yr) =		8,760
Total Dissolved Solid (mg/L)=		2,040

Contaminant	Emission Factor	EF Units*	Assumptions
PM10 Uncontrolled	0.0032	lb/1000 gal	Ratio of AP-42 factor of 0.019 lb/Mgal @ 12,000 ppm TDS. Assumes total liquid drift is 0.02 % of total liquid flow (AP-42 Table 13.4-1).
VOC	0.7	lb/1,000,000 gal	AP-42 Table 5.1-2 factor assumes minimization of hydrocarbon leaks into cooling water system; monitoring of cooling water for hydrocarbons. The refinery monitors residual chlorine.

* - gallons of circulating water

Cooling Tower	PM/PM10, lb/hr	PM/PM10, ton/year	VOC, lb/hr	VOC, ton/year
#5 Cooling Tower	0.698	3.06	0.151	0.66

Company Name: **Countrymark Cooperative, LLP**
Address, City IN Zip: **1200 Refinery Road, Mount Vernon, IN 47620**
Minor Source Mod: **129-26889-00003**
Significant Permit Mod **129-26980-00003**

Reviewer: Michael S. Brooks

Date: 9/22/2008

Year	CCI Tank No.	Tank type	Diameter (ft.)	Tank Capacity (gallons)	Stored material	Actual Throughput, gal/yr	Turnovers	Standing loss, lb/yr	Working loss, lb/yr	**Em. Factor - Standing lb/1000 gal capacity**	**Em. Factor - Working lb/1000 gal throughput**	Standing Loss, ton/yr	Working Loss, ton/yr	Tank Total, ton/yr
2006	40	Internal	100	2,222,388	Diesel-R	15,179,158	6.83	13	36	**0.0060**	**0.0024**	0.01	0.02	0.02
2007	40	Internal	100	2,222,388	Diesel-R	10,637,926	4.79	12	25	**0.0054**	**0.0024**	0.01	0.01	0.02
Projected	40	Internal	100	2,222,388	Gasoline RVP15.0	2,943,360,000	1,324	10,221	5,554	**4.5991**	**0.0019**	5.11	2.78	7.89

	Past Actuals (2006/2007 Average)	Future Projected	Future Projected - Past Actuals (VOC tpy)
Tank 40	0.02	7.89	7.87

Gasoline*	Vapor Mass Fraction	HAP ton/yr
Benzene	0.003	2.31E-02
Ethylbenzene	0.001	6.35E-03
Toluene	0.007	5.30E-02
Xylene	0.004	2.97E-02
n-Hexane	0.0088	6.94E-02
Cyclohexane	0.0032	2.55E-02
Naphthalene	0.000	7.87E-04
Isopropyl benzene (cumene)	0.00014	1.11E-03
2,2,4-Trimethylpentane	0.00447	3.52E-02
Total		2.44E-01

* Gasoline speciation assumed for light liquid and vapor streams, liquid concentration information from 2007/2008 Countrymark product analysis was input into the TANKS program and speciated emissions were calculated by TANKS.

Company Name: **Countrymark Cooperative, LLP**
Address, City IN Zip: **1200 Refinery Road, Mount Vernon, IN 47620**
Minor Source Mod: **129-26889-00003**
Significant Permit Mod **129-26980-00003**
Reviewer: Michael S. Brooks
Date: 9/22/2008

Additional sulfur to the SRU

362	lb sulfur/day removed from the gasoline
724	equivalent lb SO2/day
365	day/yr
99.9	% control by the SRU and TGTU (based on maximum calculated input and output at the Subpart UUU limit for the ULSD Project)
0.13	ton SO2/yr