INDIANA DEPARTMENT OF ENVIRONMENTAL MANAGEMENT
We Protect Hoosiers and Our Environment.

Mitchell E. Daniels Jr.
Governor

Thomas W. Easterly
Commissioner

100 North Senate Avenue
Indianapolis, Indiana 46204
(317) 232-8603
Toll Free (800) 451-6027
www.idem.IN.gov

TO: Interested Parties / Applicant

DATE: April 12, 2012

RE: Jupiter Aluminum Corporation / 089-31369-00201

FROM: Matthew Stuckey, Branch Chief
Permits Branch
Office of Air Quality

Notice of Decision: Approval – Effective Immediately

Please be advised that on behalf of the Commissioner of the Department of Environmental Management, I have issued a decision regarding the enclosed matter. Pursuant to IC 13-17-3-4 and 326 IAC 2, this permit modification is effective immediately, unless a petition for stay of effectiveness is filed and granted, and may be revoked or modified in accordance with the provisions of IC 13-15-7-1.

If you wish to challenge this decision, IC 4-21.5-3-7 and IC 13-15-7-3 require that you file a petition for administrative review. This petition may include a request for stay of effectiveness and must be submitted to the Office Environmental Adjudication, 100 North Senate Avenue, Government Center North, Suite N 501E, Indianapolis, IN 46204, **within eighteen (18) days of the mailing of this notice**. The filing of a petition for administrative review is complete on the earliest of the following dates that apply to the filing:

(1) the date the document is delivered to the Office of Environmental Adjudication (OEA);
(2) the date of the postmark on the envelope containing the document, if the document is mailed to OEA by U.S. mail; or
(3) The date on which the document is deposited with a private carrier, as shown by receipt issued by the carrier, if the document is sent to the OEA by private carrier.

The petition must include facts demonstrating that you are either the applicant, a person aggrieved or adversely affected by the decision or otherwise entitled to review by law. Please identify the permit, decision, or other order for which you seek review by permit number, name of the applicant, location, date of this notice and all of the following:

(1) the name and address of the person making the request;
(2) the interest of the person making the request;
(3) identification of any persons represented by the person making the request;
(4) the reasons, with particularity, for the request;
(5) the issues, with particularity, proposed for considerations at any hearing; and
(6) identification of the terms and conditions which, in the judgment of the person making the request, would be appropriate in the case in question to satisfy the requirements of the law governing documents of the type issued by the Commissioner.

Recycled Paper An Equal Opportunity Employer *Please Recycle*

Pursuant to 326 IAC 2-7-18(d), any person may petition the U.S. EPA to object to the issuance of a Title V operating permit or modification within sixty (60) days of the end of the forty-five (45) day EPA review period. Such an objection must be based only on issues that were raised with reasonable specificity during the public comment period, unless the petitioner demonstrates that it was impractible to raise such issues, or if the grounds for such objection arose after the comment period.

To petition the U.S. EPA to object to the issuance of a Title V operating permit, contact:

U.S. Environmental Protection Agency
401 M Street
Washington, D.C. 20406

If you have technical questions regarding the enclosed documents, please contact the Office of Air Quality, Permits Branch at (317) 233-0178. Callers from within Indiana may call toll-free at 1-800-451-6027, ext. 3-0178.

Enclosures
FNTV-PMOD.doc 3/27/08

INDIANA DEPARTMENT OF ENVIRONMENTAL MANAGEMENT
We Protect Hoosiers and Our Environment.

Mitchell E. Daniels, Jr.
Governor

Thomas W. Easterly
Commissioner

100 North Senate Avenue
Indianapolis, Indiana 46204
(317) 232-8603
Toll Free (800) 451-6027
www.idem.IN.gov

Mr. Volkmann Mark
Jupiter Aluminum Corporation
1745 165th Street,
Hammond, Indiana 46320

April 12,2012

Re: 089-31369-00201
Significant Permit Modification to
Part 70 Renewal No.: T 089-15690-00201

Dear Mr. Volkmann:

Jupiter Aluminum Corporation was issued a Part 70 Operating Permit Renewal on September 28, 2010 for a secondary aluminum processing operation. A letter requesting changes to this permit was received on January 18, 2012. Pursuant to the provisions of 326 IAC 2-7-12 a significant permit modification to this permit is hereby approved as described in the attached Technical Support Document.

Furnaces #2, #6 and #9 are permitted to combust waste oil, which is a back-up to the natural gas supply, however the source is presently not configured to consume waste oil. The source is requesting IDEM to modify the permit testing conditions to require testing for the waste oil within 90 days upon the configuration of these sources to fire waste oil.

All other conditions of the permit shall remain unchanged and in effect. For your convenience, the entire Part 70 Operating Permit as modified will be provided at issuance.

This decision is subject to the Indiana Administrative Orders and Procedures Act – IC 4-21.5-3-5. If you have any questions on this matter, please contact Josiah Balogun, OAQ, 100 North Senate Avenue, MC 61-53, Room 1003, Indianapolis, Indiana, 46204-2251, or call at (800) 451-6027, and ask for Josiah Balogun or extension (4-5257), or dial (317) 234-5257.

Sincerely,

Tripurari P. Sinha, Ph.D., Section Chief
Permits Branch
Office of Air Quality

Attachments:
Updated Permit
Technical Support Document

JB

cc: File – Lake County
Lake County Health Department
U.S. EPA, Region V
Northwest Regional Office
Compliance and Enforcement Branch

INDIANA DEPARTMENT OF ENVIRONMENTAL MANAGEMENT
We Protect Hoosiers and Our Environment.

Mitchell E. Daniels Jr.
Governor

Thomas W. Easterly
Commissioner

100 North Senate Avenue
Indianapolis, Indiana 46204
(317) 232-8603
Toll Free (800) 451-6027
www.idem.IN.gov

Part 70 Operating Permit
OFFICE OF AIR QUALITY

Jupiter Aluminum Corporation
1745 165th Street
Hammond, Indiana 46320

(herein known as the Permittee) is hereby authorized to operate subject to the conditions contained herein, the source described in Section A (Source Summary) of this permit.

The Permittee must comply with all conditions of this permit. Noncompliance with any provisions of this permit is grounds for enforcement action; permit termination, revocation and reissuance, or modification; or denial of a permit renewal application. Noncompliance with any provision of this permit, except any provision specifically designated as not federally enforceable, constitutes a violation of the Clean Air Act. It shall not be a defense for the Permittee in an enforcement action that it would have been necessary to halt or reduce the permitted activity in order to maintain compliance with the conditions of this permit. An emergency does constitute an affirmative defense in an enforcement action provided the Permittee complies with the applicable requirements set forth in Section B, Emergency Provisions.

This permit is issued in accordance with 326 IAC 2 and 40 CFR Part 70 Appendix A and contains the conditions and provisions specified in 326 IAC 2-7 as required by 42 U.S.C. 7401, et. seq. (Clean Air Act as amended by the 1990 Clean Air Act Amendments), 40 CFR Part 70.6, IC 13-15 and IC 13-17.

Operation Permit No.: T089-15690-00201	
Issued by: Tripurari P. Sinha, Ph. D., Section Chief Permits Branch Office of Air Quality	Issuance Date: September 28, 2010 Expiration Date: September 28, 2015

Administrative Amendment No. 089-30996-00201, issued on December 28, 2011.

Minor Permit Modification No.: 089-31369-00201	
Issued by: Tripurari Sinha Tripurari P. Sinha, Ph. D., Section Chief Permits Branch Office of Air Quality	Issuance Date: April 12, 2012 Expiration Date: September 28, 2015

TABLE OF CONTENTS

A. SOURCE SUMMARY

A.1 General Information [326 IAC 2-7-4(c)][326 IAC 2-7-5(15)][326 IAC 2-7-1(22)]
A.2 Emission Units and Pollution Control Equipment Summary [326 IAC 2-7-4(c)(3)] [326 IAC 2-7-5(15)]
A.3 Specifically Regulated Insignificant Activities [326 IAC 2-7-1(21)][326 IAC 2-7-4(c)] [326 IAC 2-7-5(15)]
A.4 Part 70 Permit Applicability [326 IAC 2-7-2]

B. GENERAL CONDITIONS

B.1 Definitions [326 IAC 2-7-1]
B.2 Permit Term [326 IAC 2-7-5(2)][326 IAC 2-1.1-9.5][326 IAC 2-7-4(a)(1)(D)] [IC 13-15-3-6(a)]
B.3 Term of Conditions [326 IAC 2-1.1-9.5]
B.4 Enforceability [326 IAC 2-7-7] [IC 13-17-12]
B.5 Severability [326 IAC 2-7-5(5)]
B.6 Property Rights or Exclusive Privilege [326 IAC 2-7-5(6)(D)]
B.7 Duty to Provide Information [326 IAC 2-7-5(6)(E)]
B.8 Certification [326 IAC 2-7-4(f)][326 IAC 2-7-6(1)][326 IAC 2-7-5(3)(C)]
B.9 Annual Compliance Certification [326 IAC 2-7-6(5)]
B.10 Preventive Maintenance Plan [326 IAC 2-7-5(1),(3) and (13)][326 IAC 2-7-6(1) and (6)] [326 IAC 1-6-3]
B.11 Emergency Provisions [326 IAC 2-7-16]
B.12 Permit Shield [326 IAC 2-7-15][326 IAC 2-7-20][326 IAC 2-7-12]
B.13 Prior Permits Superseded [326 IAC 2-1.1-9.5][326 IAC 2-7-10.5]
B.14 Termination of Right to Operate [326 IAC 2-7-10][326 IAC 2-7-4(a)]
B.15 Permit Modification, Reopening, Revocation and Reissuance, or Termination [326 IAC 2-7-5(6)(C)][326 IAC 2-7-8(a)][326 IAC 2-7-9]
B.16 Permit Renewal [326 IAC 2-7-3][326 IAC 2-7-4][326 IAC 2-7-8(e)]
B.17 Permit Amendment or Modification [326 IAC 2-7-11][326 IAC 2-7-12] [40 CFR 72]
B.18 Permit Revision Under Economic Incentives and Other Programs [326 IAC 2-7-5(8)] [326 IAC 2-7-12(b)(2)]
B.19 Operational Flexibility [326 IAC 2-7-20][326 IAC 2-7-10.5]
B.20 Source Modification Requirement [326 IAC 2-7-10.5]
B.21 Inspection and Entry [326 IAC 2-7-6][IC 13-14-2-2][IC 13-30-3-1][IC 13-17-3-2]
B.22 Transfer of Ownership or Operational Control [326 IAC 2-7-11]
B.23 Annual Fee Payment [326 IAC 2-7-19] [326 IAC 2-7-5(7)][326 IAC 2-1.1-7]
B.24 Credible Evidence [326 IAC 2-7-5(3)][326 IAC 2-7-6][62 FR 8314] [326 IAC 1-1-6]

C. SOURCE OPERATION CONDITIONS

Emission Limitations and Standards [326 IAC 2-7-5(1)]

C.1 Opacity [326 IAC 5-1]
C.2 Open Burning [326 IAC 4-1] [IC 13-17-9]
C.3 Incineration [326 IAC 4-2] [326 IAC 9-1-2]
C.4 Fugitive Dust Emissions [326 IAC 6-4]
C.5 Fugitive Dust Emissions [326 IAC 6.8-10-3]
C.6 Stack Height [326 IAC 1-7]
C.7 Asbestos Abatement Projects [326 IAC 14-10] [326 IAC 18] [40 CFR 61, Subpart M]

Testing Requirements [326 IAC 2-7-6(1)]

C.8 Performance Testing [326 IAC 3-6]

Compliance Requirements [326 IAC 2-1.1-11]
C.9 Compliance Requirements [326 IAC 2-1.1-11]

Compliance Monitoring Requirements [326 IAC 2-7-5(1)][326 IAC 2-7-6(1)]
C.10 Compliance Monitoring [326 IAC 2-7-5(3)][326 IAC 2-7-6(1)]
C.11 Instrument Specifications [326 IAC 2-1.1-11] [326 IAC 2-7-5(3)] [326 IAC 2-7-6(1)]
C.12 Continuous Compliance Plan [326 IAC 6.8-8.1][326 IAC 6.8-8-8]

Corrective Actions and Response Steps [326 IAC 2-7-5][326 IAC 2-7-6]
C.13 Emergency Reduction Plans [326 IAC 1-5-2] [326 IAC 1-5-3]
C.14 Risk Management Plan [326 IAC 2-7-5(12)] [40 CFR 68]
C.15 Response to Excursions or Exceedances [326 IAC 2-7-5] [326 IAC 2-7-6]
C.16 Actions Related to Noncompliance Demonstrated by a Stack Test [326 IAC 2-7-5] [326 IAC 2-7-6]

Record Keeping and Reporting Requirements [326 IAC 2-7-5(3)] [326 IAC 2-7-19]
C.17 Emission Statement [326 IAC 2-7-5(3)(C)(iii)][326 IAC 2-7-5(7)][326 IAC 2-7-19(c)] [326 IAC 2-6]
C.18 General Record Keeping Requirements [326 IAC 2-7-5(3)] [326 IAC 2-7-6] [326 IAC 2-2] [326 IAC 2-3]
C.19 General Reporting Requirements [326 IAC 2-7-5(3)(C)] [326 IAC 2-1.1-11] [326 IAC 2-3]

Stratospheric Ozone Protection
C.20 Compliance with 40 CFR 82 and 326 IAC 22-1

D.0. EMISSIONS UNIT OPERATION CONDITIONS

Emission Limitations and Standards [326 IAC 2-7-5(1)]
D.0.1 Prevention of Significant Deterioration (PSD) Minor Limits [326 IAC 2-2]
D.0.2 Nonattainment New Source Review (NSR) Minor Limit [326 IAC 2-1.1-5]
D.0.3 IDEM Settlement Agreement Case #2002-12585-A
D.0.4 Specific VOC Reduction Requirments for Lake County [326 IAC 8-7]

Compliance Determination Requirements [326 IAC 2-7-6(1)][326 IAC 2-7-5(1)]
D.0.5 PM, PM10, VOC and PM2.5 Compliance Determination

Record Keeping and Reporting Requirements [326 IAC 2-7-5(3)] [326 IAC 2-7-19]
D.0.6 Reporting Requirement

D.1. EMISSIONS UNIT OPERATION CONDITIONS

Emission Limitations and Standards [326 IAC 2-7-5(1)]
D.1.1 Particulate Matter Less than ten (10) microns in diameter (PM10) [326 IAC 6.8]
D.1.2 Preventive Maintenance Plan [326 IAC 2-7-5(13)]

Compliance Determination Requirements [326 IAC 2-7-6(1)][326 IAC 2-7-5(1)]
D.1.3 Testing Requirements [326 IAC 2-7-6(1)][326 IAC 2-1.1-11][326 IAC 2-2][326 IAC 2-1.1-5]
D.1.4 PM, PM10, PM2.5 and VOC Calculations

Record Keeping and Reporting Requirements [326 IAC 2-7-5(3)] [326 IAC 2-7-19]
D.1.5 Record Keeping Requirement

D.2. EMISSIONS UNIT OPERATION CONDITIONS

Emission Limitations and Standards [326 IAC 2-7-5(1)]
D.2.1 Particulate Matter less than ten (10) microns in diameter (PM10) [326 IAC 6.8]
D.2.2 Lake County Sulfur Dioxide Emission Limitations [326 IAC 7-4.1-1]

Compliance Determination Requirements [326 IAC 2-7-6(1)][326 IAC 2-7-5(1)]
D.2.3 Particulate Control
D.2.4 Testing Requirements [326 IAC 2-7-6(1)][326 IAC 2-1.1-11][326 IAC 2-2][326 IAC 2-1.1-5]
D.2.5 PM, PM10, PM2.5 and VOC Calculations

Compliance Monitoring Requirements [326 IAC 2-7-5(1)][326 IAC 2-7-6(1)]
D.2.6 Parametric Monitoring

Record Keeping Requirement [326 IAC 2-7-5(3)] [326 IAC 2-7-19]
D.2.7 Record Keeping Requirement

D.3. EMISSIONS UNIT OPERATION CONDITIONS

Emission Limitations and Standards [326 IAC 2-7-5(1)]
D.3.1 Particulate Matter less than ten (10) microns in diameter (PM10) [326 IAC 6.8]
D.3.2 Preventive Maintenance Plan [326 IAC 2-7-5(13)]

Compliance Determination Requirements [326 IAC 2-7-6(1)][326 IAC 2-7-5(1)]
D.3.3 Particulate Control
D.3.4 Testing Requirements [326 IAC 2-7-6(1)][326 IAC 2-1.1-11][326 IAC 2-2][326 IAC 2-1.1-5]
D.3.5 PM, PM10, PM2.5 and VOC Calculations

Compliance Monitoring Requirements [326 IAC 2-7-5(1)][326 IAC 2-7-6(1)]
D.3.6 Visible Emission Notations
D.3.7 Parametric Monitoring

Record Keeping Requirements [326 IAC 2-7-5(3)] [326 IAC 2-7-19]
D.3.8 Record Keeping Requirement

D.4. EMISSIONS UNIT OPERATION CONDITIONS

Emission Limitations and Standards [326 IAC 2-7-5(1)]
D.4.1 Particulate Matter less than ten (10) microns in diameter (PM10) [326 IAC 6.8]
D.4.2 Preventive Maintenance Plan [326 IAC 2-7-5(13)]

Compliance Determination Requirements [326 IAC 2-7-6(1)][326 IAC 2-7-5(1)]
D.4.3 PM, PM10, PM2.5 and VOC Calculations

D.5. EMISSIONS UNIT OPERATION CONDITIONS

Emission Limitations and Standards [326 IAC 2-7-5(1)]
D.5.1 Organic Solvent Degreasing Operations: Cold Cleaner Operations [326 IAC 8-3-2]
D.5.2 Organic Solvent Degreasing Operations: Cold Cleaner Operations and Controls [326 IAC 8-3-5]

E.1. EMISSIONS UNIT OPERATION CONDITIONS

National Emission Standards for Hazardous Air Pollutants (NESHAP) Requirements [326 IAC 2-7-5(1)]

E.1.1 General Provisions Relating to NESHAP Subpart RRR (National Emission Standards for Hazardous Air Pollutants for Secondary Aluminum Production) [326 IAC 20-1-1] [40 CFR Part 63, Subpart A]

E.1.2 NESHAP Subpart RRR Requirements [40 CFR, Subpart RRR]

Certification
Emergency Occurrence Report
Quarterly Report
Quarterly Deviation and Compliance Monitoring Report

Attachment A - 40 CFR 63, Subpart RRR

Fugitive Dust Control Plan.

SECTION A SOURCE SUMMARY

This permit is based on information requested by the Indiana Department of Environmental Management (IDEM), Office of Air Quality (OAQ). The information describing the source contained in conditions A.1 through A.3 is descriptive information and does not constitute enforceable conditions. However, the Permittee should be aware that a physical change or a change in the method of operation that may render this descriptive information obsolete or inaccurate may trigger requirements for the Permittee to obtain additional permits or seek modification of this permit pursuant to 326 IAC 2, or change other applicable requirements presented in the permit application.

A.1 General Information [326 IAC 2-7-4(c)][326 IAC 2-7-5(15)][326 IAC 2-7-1(22)]

The Permittee owns and operates a stationary secondary aluminum processing operation.

Source Address:	1745 165th Street, Hammond, Indiana 46320
General Source Phone Number:	219-933-2752
SIC Code:	3353
County Location:	Lake
Source Location Status:	Nonattainment for PM2.5 standard Attainment for all other criteria pollutants
Source Status:	Part 70 Operating Permit Program Minor Source, under PSD Rules Minor Source, under Nonattainment NSR for PM2.5 Major Source, Section 112 of the Clean Air Act 1 of 28 Source Categories

A.2 Emission Units and Pollution Control Equipment Summary [326 IAC 2-7-4(c)(3)] [326 IAC 2-7-5(15)]

This stationary source consists of the following emission units and pollution control devices:

Two (2) Boilers

(a) Boiler #1 (BS-10.1)
One (1) natural gas-fired boiler, identified as Boiler #1, installed in 2001, with a rated heat input capacity of 4.185 MMBtu/hr, and exhausting to stack S-17.

(b) Boiler #2 (BS-10.2)
One (1) natural gas-fired boiler, identified as Boiler #2, installed in 1999, with a rated heat input capacity of 4.185 MMBtu/hr, and exhausting to stack S-18.

Six (6) Annealing Furnaces

(c) Annealing Furnace #1 (AS-3)
One (1) natural gas-fired annealing furnace, identified as Annealing Furnace #1, modified in 1995, with a rated capacity of 4.86 tons of aluminum coil per hour and a heat input capacity of 9.0 MMBtu/hr, using a fume filtration system (FFS-AN1) to control visible emissions from the annealing process (stack AS-3.3), and exhausting (combustion gas only) to stacks AS-3.1 and 3.2.

(d) Annealing Furnace #2 (AS-4)
One (1) natural gas-fired annealing furnace, identified as Annealing Furnace #2, installed in 1988, with a rated capacity of 4.86 tons of aluminum coil per hour and a heat input capacity of 16.0 MMBtu/hr, using a fume filtration system (FFS-AN2) to control visible emissions from the annealing process (stack AS-4.5), and exhausting (combustion gas only) to stacks AS-4.1, 4.2, 4.3, and 4.4.

(e) Annealing Furnace #3 (AS-5)
One (1) natural gas-fired annealing furnace, identified as Annealing Furnace #3, installed in 1989, with a rated capacity of 4.86 tons of aluminum coil per hour and a heat input capacity of 16.0 MMBtu/hr, using a fume filtration system (FFS-AN3) to control visible emissions from the annealing process (stack AS-5.4), and exhausting (combustion gas only) to stacks AS-5.1, 5.2, and 5.3.

(f) Annealing Furnace #4 (AS-6)
One (1) natural gas-fired annealing furnace, identified as Annealing Furnace #4, installed in 1999, with a rated capacity of 4.86 tons of aluminum coil per hour and a heat input capacity of 13.5 MMBtu/hr, using a fume filtration system (FFS-AN4) to control visible emissions from the annealing process (stack AS-6.1), and exhausting (combustion gas only) to stack AS-6.2.

(g) Annealing Furnace #5 (AS-7)
One (1) natural gas-fired annealing furnace, identified as Annealing Furnace #5, installed in 1999, with a rated capacity of 4.86 tons of aluminum coil per hour and a heat input capacity of 13.5 MMBtu/hr, using a fume filtration system (FFS-AN5) to control visible emissions from the annealing process (stack AS-7.1), and exhausting (combustion gas only) to stack AS-7.2.

(h) Annealing Furnace #6 (AS-8)
One (1) natural gas-fired annealing furnace, identified as Annealing Furnace #6, installed in 2011, with a rated capacity of 9.73 tons of aluminum coil per hour and a heat input capacity of 20 MMBtu/hr, using a fume filtration system (FFS-AN6) to control visible emissions from the annealing process (stack AS-21A), and exhausting (combustion gas only) to stack S-21.

Aluminum Melting Furnaces & Dross Cooling Subject to 40 CFR 63, Subpart RRR

(i) Aluminum Reverberatory Furnace #2 (MS-1A)
One (1) aluminum reverberatory furnace, identified as Furnace #2, modified in 2000, with a rated scrap aluminum feed/charge capacity of 18 tons per hour and a heat input capacity of 20 MMBtu/hr using natural gas or waste oil, using baghouses (BHS-9 and BHS 12) as control, and exhausting to stacks S-19 and S-11. Under NESHAP 40 CFR 63, Subpart RRR, Furnace #2 is defined as a Sidewell Group 1 furnace with add-on control.

(j) Aluminum Reverberatory Furnace #6 (MS-1E)
One (1) aluminum reverberatory furnace, identified as Furnace #6, modified in 1998, with a rated scrap aluminum feed/charge capacity of 18 tons per hour and a heat input capacity of 20 MMBtu/hr using natural gas or waste oil, using baghouses (BHS-6 and 7) as control, and exhausting to stacks S-12 and S-11. Under NESHAP 40 CFR 63, Subpart RRR, Furnace #6 is defined as a Sidewell Group 1 furnace with add-on control.

(k) Aluminum Reverberatory Furnace #9 (MS-1H)
One (1) aluminum reverberatory furnace, identified as Furnace #9, approved in 2008 for construction, with a rated scrap aluminum feed/charge capacity of 18 tons per hour and a heat input capacity of 20 MMBtu/hr using natural gas or waste oil, using a baghouse (BHS-11) as control, and exhausting to stack S-23. Under NESHAP 40 CFR 63, Subpart RRR, Furnace #9 is defined as a Sidewell Group 1 furnace with add-on control.

(l) Holding Furnace (HS-2)

One (1) aluminum holding furnace, identified as Holding Furnace #1, installed in 1985 and rebuilt in 2007, receiving and holding molten aluminum prior to casting, with a heat input capacity of 10 MMBtu/hr using natural gas only, and exhausting to stack S-16. Under NESHAP 40 CFR 63, Subpart RRR, Holding Furnace #1 is defined as a Group 2 furnace that holds or processes only clean charge.

(m) Rotary Dross Cooler (DC-1)
One (1) rotary dross cooler, identified as the Rotary Dross Cooler, approved in 2008 for construction, with a rated aluminum dross process capacity of 4.0 tons per hour, using a jet pulse baghouse (BHS-10) as control, and exhausting to stack S-22. Under NESHAP 40 CFR 63, Subpart RRR, Rotary Dross Cooler (DC-1) is defined as a rotary dross cooler with emissions controlled by a fabric filter.

(n) Dross Cooling Operation
One (1) dross cooling operation, processing up to 4.0 tons of aluminum dross per hour, utilizing a dross press to reduce fugitive emissions, and exhausting into the building.

Hot Mill – Cold Mills – Tension Levelers

(o) Hot Rolling Mill (HM-1)
One (1) hot rolling mill, identified as the Hot Mill, installed in 1985 and reconstructed in 2007, with a rated capacity of 34.2 tons of aluminum coil per hour, using an oil mist collection and removal system (HMC-1) for reduction of particulates and VOC, and exhausting to stack S-20.

(p) Cold Mill 2 (CM-2)
One (1) cold rolling mill, identified as Cold Mill 2, installed in 1985 and reconstructed in 2007, with a rated capacity of 22 tons of aluminum coil per hour, using two (2) identical oil mist collection and removal systems (CM-2-FFS-A and B) for control of particulates and VOC, and exhausting to stacks S-30A and S-30B.

(q) Cold Mill 3 (CM-3)
One (1) cold rolling mill, identified as Cold Mill 3, installed in 1985 and reconstructed in 2007, with a rated capacity of 22 tons of aluminum coil per hour, using an oil mist collection and removal system (CM-3-FFS-A) for control of particulates and VOC, and exhausting to stack S-40.

(r) Cold Mill 4 (CM-4)
One (1) cold rolling mill, identified as Cold Mill 4, constructed in 2010, with a rated capacity of 22 tons of aluminum coil per hour, using an oil mist collection and removal system (CM-4-FFS-A) for control of particulates and VOC, and exhausting to stack S-50.

(s) Tension Leveler 1 (TLV-1)
One (1) tension leveler, identified as Tension Leveler 1, installed in 1989, with a rated capacity of 22 tons of aluminum coil per hour, using a low volatile finishing lubricant, with no controls and no stack.

(t) Tension Leveler 2 (TLV-2)
One (1) tension leveler, identified as Tension Leveler 2, installed in 1998, with a rated capacity of 22 tons of aluminum coil per hour, using a low volatile finishing lubricant, with no controls and no stack.

(u) Tension Leveler 3 (TLV-3)
One (1) tension leveler, identified as Tension Leveler 3, installed in 2006, with a rated

capacity of 22 tons of aluminum coil per hour, using a low volatile finishing lubricant, with no controls and no stack.

A.3 Specifically Regulated Insignificant Activities [326 IAC 2-7-1(21)] [326 IAC 2-7-4(c)] [326 IAC 2-7-5(15)]

This stationary source also includes the following insignificant activities which are specifically regulated, as defined in 326 IAC 2-7-1(21):

(a) Natural gas-fired combustion sources with heat input equal to or less than ten million (10,000,000) Btu per hour.

(b) Fuel oil-fired combustion sources with heat input equal to or less than two million (2,000,000) Btu per hour and firing fuel containing less than five-tenths percent (0.5%) sulfur by weight.

(c) Equipment powered by diesel fuel-fired or natural gas-fired internal combustion engines of capacity equal to or less than five hundred thousand (500,000) Btu/hr, except where total capacity of equipment operated by one stationary source exceeds two million (2,000,000) Btu/hr.

(d) A petroleum fuel, other than gasoline, dispensing facility, having a storage tank capacity less than or equal to ten thousand five hundred (10,500) gallons, and dispensing three thousand five hundred (3,500) gallons per day or less.

(e) Vessels storing hydraulic oils, lubricating oils, machining oils, or machining fluids.

(f) Refractory storage not requiring air pollution control equipment.

(g) Application of oils as temporary protective coatings.

(h) Machining where an aqueous cutting coolant continuously floods the machining interface.

(i) Degreasing operations that do not exceed one hundred forty-five (145) gallons per twelve (12) months, except if subject to 326 IAC 20-6 [326 IAC 8-3-2] [326 IAC 8-3-5].

(j) Rolling oil recovery systems.

(k) Forced and induced draft cooling tower system not regulated under a NESHAP.

(l) Replacement or repair of electrostatic precipitators, bags in baghouses and filters in other air filtration equipment.

(m) Heat exchanger cleaning and repair.

(n) Equipment used to collect any material that might be released during a malfunction, process upset, or spill cleanup, including catch tanks, temporary liquid separators, tanks, and fluid handling equipment.

(o) Blowdown for any of the following: sight glass, boiler, compressors, pumps, or cooling tower.

(p) Activities associated with emergencies, including natural gas turbines or reciprocating engines not exceeding sixteen thousand (16,000) horsepower or stationary fire pump engines.

(q) Filter or coalescer media changeout.

(r) Water-based Primer Applicator Line.

A.4 Part 70 Permit Applicability [326 IAC 2-7-2]

This stationary source is required to have a Part 70 permit by 326 IAC 2-7-2 (Applicability) because:

(a) It is a major source, as defined in 326 IAC 2-7-1(22);

(b) It is a source in a source category designated by the United States Environmental Protection Agency (U.S. EPA) under 40 CFR 70.3 (Part 70 - Applicability).

SECTION B GENERAL CONDITIONS

B.1 Definitions [326 IAC 2-7-1]

Terms in this permit shall have the definition assigned to such terms in the referenced regulation. In the absence of definitions in the referenced regulation, the applicable definitions found in the statutes or regulations (IC 13-11, 326 IAC 1-2 and 326 IAC 2-7) shall prevail.

B.2 Permit Term [326 IAC 2-7-5(2)][326 IAC 2-1.1-9.5][326 IAC 2-7-4(a)(1)(D)][IC 13-15-3-6(a)]

(a) The Part 70 Operating Permit, T 089-15690-00201, is issued for a fixed term of five (5) years as determined in accordance with IC 4-21.5-3-5(f) and IC 13-15-5-3. Subsequent revisions, modifications, or amendments of this permit do not affect the expiration date of this permit or of permits issued pursuant to Title IV of the Clean Air Act and 326 IAC 21 (Acid Deposition Control).

(b) If IDEM, OAQ, upon receiving a timely and complete renewal permit application, fails to issue or deny the permit renewal prior to the expiration date of this permit, this existing permit shall not expire and all terms and conditions shall continue in effect, including any permit shield provided in 326 IAC 2-7-15, until the renewal permit has been issued or denied.

B.3 Term of Conditions [326 IAC 2-1.1-9.5]

Notwithstanding the permit term of a permit to construct, a permit to operate, or a permit modification, any condition established in a permit issued pursuant to a permitting program approved in the state implementation plan shall remain in effect until:

(a) the condition is modified in a subsequent permit action pursuant to Title I of the Clean Air Act; or

(b) the emission unit to which the condition pertains permanently ceases operation.

B.4 Enforceability [326 IAC 2-7-7] [IC 13-17-12]

Unless otherwise stated, all terms and conditions in this permit, including any provisions designed to limit the source's potential to emit, are enforceable by IDEM, the United States Environmental Protection Agency (U.S. EPA) and by citizens in accordance with the Clean Air Act.

B.5 Severability [326 IAC 2-7-5(5)]

The provisions of this permit are severable; a determination that any portion of this permit is invalid shall not affect the validity of the remainder of the permit.

B.6 Property Rights or Exclusive Privilege [326 IAC 2-7-5(6)(D)]

This permit does not convey any property rights of any sort or any exclusive privilege.

B.7 Duty to Provide Information [326 IAC 2-7-5(6)(E)]

(a) The Permittee shall furnish to IDEM, OAQ, within a reasonable time, any information that IDEM, OAQ may request in writing to determine whether cause exists for modifying, revoking and reissuing, or terminating this permit, or to determine compliance with this permit. Upon request, the Permittee shall also furnish to IDEM, OAQ copies of records required to be kept by this permit.

(b) For information furnished by the Permittee to IDEM, OAQ, the Permittee may include a claim of confidentiality in accordance with 326 IAC 17.1. When furnishing copies of requested records directly to U. S. EPA, the Permittee may assert a claim of confidentiality in accordance with 40 CFR 2, Subpart B.

B.8 Certification [326 IAC 2-7-4(f)][326 IAC 2-7-6(1)][326 IAC 2-7-5(3)(C)]

(a) A certification required by this permit meets the requirements of 326 IAC 2-7-6(1) if:

(i) it contains a certification by a "responsible official", as defined by 326 IAC 2-7-1 (34), and

(ii) the certification is based on information and belief formed after reasonable inquiry, the statements and information in the document are true, accurate, and complete.

(b) The Permittee may use the attached Certification Form, or its equivalent, with each submittal requiring certification. One (1) certification may cover multiple forms in one (1) submittal.

(c) A "responsible official" is defined at 326 IAC 2-7-1(34).

B.9 Annual Compliance Certification [326 IAC 2-7-6(5)]

(a) The Permittee shall annually submit a compliance certification report which addresses the status of the source's compliance with the terms and conditions contained in this permit, including emission limitations, standards, or work practices. All certifications shall cover the time period from January 1 to December 31 of the previous year, and shall be submitted no later than April 15 of each year to:

Indiana Department of Environmental Management
Compliance and Enforcement Branch, Office of Air Quality
100 North Senate Avenue
MC 61-53 IGCN 1003
Indianapolis, Indiana 46204-2251

and

United States Environmental Protection Agency, Region V
Air and Radiation Division, Air Enforcement Branch - Indiana (AE-17J)
77 West Jackson Boulevard
Chicago, Illinois 60604-3590

(b) The annual compliance certification report required by this permit shall be considered timely if the date postmarked on the envelope or certified mail receipt, or affixed by the shipper on the private shipping receipt, is on or before the date it is due. If the document is submitted by any other means, it shall be considered timely if received by IDEM, OAQ on or before the date it is due.

(c) The annual compliance certification report shall include the following:

(1) The appropriate identification of each term or condition of this permit that is the basis of the certification;

(2) The compliance status;

(3) Whether compliance was continuous or intermittent;

(4) The methods used for determining the compliance status of the source, currently and over the reporting period consistent with 326 IAC 2-7-5(3); and

(5) Such other facts, as specified in Sections D of this permit, as IDEM, OAQ may require to determine the compliance status of the source.

The submittal by the Permittee does require the certification by the "responsible official" as defined by 326 IAC 2-7-1(34).

B.10 Preventive Maintenance Plan [326 IAC 2-7-5(1),(3) and (13)][326 IAC 2-7-6(1) and (6)][326 IAC 1-6-3]

(a) If required by specific condition(s) in Section D of this permit where no PMP was previously required, the Permittee shall prepare and maintain Preventive Maintenance Plans (PMPs) no later than ninety (90) days after issuance of this permit or ninety (90) days after initial start-up, whichever is later, including the following information on each facility:

(1) Identification of the individual(s) responsible for inspecting, maintaining, and repairing emission control devices;

(2) A description of the items or conditions that will be inspected and the inspection schedule for said items or conditions; and

(3) Identification and quantification of the replacement parts that will be maintained in inventory for quick replacement.

If, due to circumstances beyond the Permittee's control, the PMPs cannot be prepared and maintained within the time frame specified in Section D, the Permittee may extend the date an additional ninety (90) days provided the Permittee notifies:

Indiana Department of Environmental Management
Compliance and Enforcement Branch, Office of Air Quality
100 North Senate Avenue
MC 61-53 IGCN 1003
Indianapolis, Indiana 46204-2251

The PMP extension notification does not require a certification that meets the requirements of 326 IAC 2-7-6(1) by a "responsible official" as defined by 326 IAC 2-7-1(34).

(b) A copy of the PMPs shall be submitted to IDEM, OAQ upon request and within a reasonable time, and shall be subject to review and approval by IDEM, OAQ. IDEM, OAQ may require the Permittee to revise its PMPs whenever lack of proper maintenance causes or is the primary contributor to an exceedance of any limitation on emissions. The PMPs do not require a certification that meets the requirements of 326 IAC 2-7-6(1) by a "responsible official" as defined by 326 IAC 2-7-1(34).

(c) To the extent the Permittee is required by 40 CFR Part 60/63 to have an Operation Maintenance, and Monitoring (OMM) Plan for a unit, such Plan is deemed to satisfy the PMP requirements of 326 IAC 1-6-3 for that unit.

B.11 Emergency Provisions [326 IAC 2-7-16]

(a) An emergency, as defined in 326 IAC 2-7-1(12), is not an affirmative defense for an action brought for noncompliance with a federal or state health-based emission limitation.

(b) An emergency, as defined in 326 IAC 2-7-1(12), constitutes an affirmative defense to an action brought for noncompliance with a technology-based emission limitation if the affirmative defense of an emergency is demonstrated through properly signed, contemporaneous operating logs or other relevant evidence that describe the following:

(1) An emergency occurred and the Permittee can, to the extent possible, identify the causes of the emergency;

(2) The permitted facility was at the time being properly operated;

(3) During the period of an emergency, the Permittee took all reasonable steps to minimize levels of emissions that exceeded the emission standards or other requirements in this permit;

(4) For each emergency lasting one (1) hour or more, the Permittee notified IDEM, OAQ, and Northwest Regional Office no later than four (4) daytime business hours after the beginning of the emergency, or after the emergency was discovered or reasonably should have been discovered;

Telephone Number: 1-800-451-6027 (ask for Office of Air Quality, Compliance and Enforcement Branch), or
Telephone Number: 317-233-0178 (ask for Compliance and Enforcement Branch)
Facsimile Number: 317-233-6865
Northwest Regional Office phone: (219) 757-0265; fax: (219) 757-0267**.**

(5) For each emergency lasting one (1) hour or more, the Permittee submitted the attached Emergency Occurrence Report Form or its equivalent, either by mail or facsimile to:

Indiana Department of Environmental Management
Compliance and Enforcement Branch, Office of Air Quality
100 North Senate Avenue
MC 61-53 IGCN 1003
Indianapolis, Indiana 46204-2251

no later than two (2) working days of the time when emission limitations were exceeded due to the emergency.

The notice fulfills the requirement of 326 IAC 2-7-5(3)(C)(ii) and must contain the following:

(A) A description of the emergency;

(B) Any steps taken to mitigate the emissions; and

(C) Corrective actions taken.

The notification which shall be submitted by the Permittee does not require a certification that meets the requirements of 326 IAC 2-7-6(1) by a “responsible official” as defined by 326 IAC 2-7-1(34).

(6) The Permittee immediately took all reasonable steps to correct the emergency.

(c) In any enforcement proceeding, the Permittee seeking to establish the occurrence of an emergency has the burden of proof.

(d) This emergency provision supersedes 326 IAC 1-6 (Malfunctions). This permit condition is in addition to any emergency or upset provision contained in any applicable requirement.

(e) The Permittee seeking to establish the occurrence of an emergency shall make records available upon request to ensure that failure to implement a PMP did not cause or

contribute to an exceedance of any limitations on emissions. However, IDEM, OAQ may require that the Preventive Maintenance Plans required under 326 IAC 2-7-4(c)(9) be revised in response to an emergency.

(f) Failure to notify IDEM, OAQ by telephone or facsimile of an emergency lasting more than one (1) hour in accordance with (b)(4) and (5) of this condition shall constitute a violation of 326 IAC 2-7 and any other applicable rules.

(g) If the emergency situation causes a deviation from a technology-based limit, the Permittee may continue to operate the affected emitting facilities during the emergency provided the Permittee immediately takes all reasonable steps to correct the emergency and minimize emissions.

B.12 Permit Shield [326 IAC 2-7-15][326 IAC 2-7-20][326 IAC 2-7-12]

(a) Pursuant to 326 IAC 2-7-15, the Permittee has been granted a permit shield. The permit shield provides that compliance with the conditions of this permit shall be deemed compliance with any applicable requirements as of the date of permit issuance, provided that either the applicable requirements are included and specifically identified in this permit or the permit contains an explicit determination or concise summary of a determination that other specifically identified requirements are not applicable. The Indiana statutes from IC 13 and rules from 326 IAC, referenced in conditions in this permit, are those applicable at the time the permit was issued. The issuance or possession of this permit shall not alone constitute a defense against an alleged violation of any law, regulation or standard, except for the requirement to obtain a Part 70 permit under 326 IAC 2-7 or for applicable requirements for which a permit shield has been granted.

This permit shield does not extend to applicable requirements which are promulgated after the date of issuance of this permit unless this permit has been modified to reflect such new requirements.

(b) If, after issuance of this permit, it is determined that the permit is in nonconformance with an applicable requirement that applied to the source on the date of permit issuance, IDEM, OAQ, shall immediately take steps to reopen and revise this permit and issue a compliance order to the Permittee to ensure expeditious compliance with the applicable requirement until the permit is reissued. The permit shield shall continue in effect so long as the Permittee is in compliance with the compliance order.

(c) No permit shield shall apply to any permit term or condition that is determined after issuance of this permit to have been based on erroneous information supplied in the permit application. Erroneous information means information that the Permittee knew to be false, or in the exercise of reasonable care should have been known to be false, at the time the information was submitted.

(d) Nothing in 326 IAC 2-7-15 or in this permit shall alter or affect the following:

(1) The provisions of Section 303 of the Clean Air Act (emergency orders), including the authority of the U.S. EPA under Section 303 of the Clean Air Act;

(2) The liability of the Permittee for any violation of applicable requirements prior to or at the time of this permit's issuance;

(3) The applicable requirements of the acid rain program, consistent with Section 408(a) of the Clean Air Act; and

(4) The ability of U.S. EPA to obtain information from the Permittee under Section 114 of the Clean Air Act.

(e) This permit shield is not applicable to any change made under 326 IAC 2-7-20(b)(2) (Sections 502(b)(10) of the Clean Air Act changes) and 326 IAC 2-7-20(c)(2) (trading based on State Implementation Plan (SIP) provisions).

(f) This permit shield is not applicable to modifications eligible for group processing until after IDEM, OAQ, has issued the modifications. [326 IAC 2-7-12(c)(7)]

(g) This permit shield is not applicable to minor Part 70 permit modifications until after IDEM, OAQ, has issued the modification. [326 IAC 2-7-12(b)(8)]

B.13 Prior Permits Superseded [326 IAC 2-1.1-9.5][326 IAC 2-7-10.5]

(a) All terms and conditions of permits established prior to T089-15690-00201 and issued pursuant to permitting programs approved into the state implementation plan have been either:

(1) incorporated as originally stated,

(2) revised under 326 IAC 2-7-10.5, or

(3) deleted under 326 IAC 2-7-10.5.

(b) Provided that all terms and conditions are accurately reflected in this permit, all previous registrations and permits are superseded by this Part 70 operating permit, except for permits issued pursuant to Title IV of the Clean Air Act and 326 IAC 21 (Acid Deposition Control)

B.14 Termination of Right to Operate [326 IAC 2-7-10][326 IAC 2-7-4(a)]

The Permittee's right to operate this source terminates with the expiration of this permit unless a timely and complete renewal application is submitted at least nine (9) months prior to the date of expiration of the source’s existing permit, consistent with 326 IAC 2-7-3 and 326 IAC 2-7-4(a).

B.15 Permit Modification, Reopening, Revocation and Reissuance, or Termination [326 IAC 2-7-5(6)(C)][326 IAC 2-7-8(a)][326 IAC 2-7-9]

(a) This permit may be modified, reopened, revoked and reissued, or terminated for cause. The filing of a request by the Permittee for a Part 70 Operating Permit modification, revocation and reissuance, or termination, or of a notification of planned changes or anticipated noncompliance does not stay any condition of this permit.
[326 IAC 2-7-5(6)(C)] The notification by the Permittee does require a certification that meets the requirements of 326 IAC 2-7-6(1) by a "responsible official" as defined by 326 IAC 2-7-1(34).

(b) This permit shall be reopened and revised under any of the circumstances listed in IC 13-15-7-2 or if IDEM, OAQ determines any of the following:

(1) That this permit contains a material mistake.

(2) That inaccurate statements were made in establishing the emissions standards or other terms or conditions.

(3) That this permit must be revised or revoked to assure compliance with an applicable requirement. [326 IAC 2-7-9(a)(3)]

(c) Proceedings by IDEM, OAQ to reopen and revise this permit shall follow the same procedures as apply to initial permit issuance and shall affect only those parts of this permit for which cause to reopen exists. Such reopening and revision shall be made as expeditiously as practicable. [326 IAC 2-7-9(b)]

(d) The reopening and revision of this permit, under 326 IAC 2-7-9(a), shall not be initiated before notice of such intent is provided to the Permittee by IDEM, OAQ at least thirty (30) days in advance of the date this permit is to be reopened, except that IDEM, OAQ may provide a shorter time period in the case of an emergency. [326 IAC 2-7-9(c)]

B.16 Permit Renewal [326 IAC 2-7-3][326 IAC 2-7-4][326 IAC 2-7-8(e)]

(a) The application for renewal shall be submitted using the application form or forms prescribed by IDEM, OAQ and shall include the information specified in 326 IAC 2-7-4. Such information shall be included in the application for each emission unit at this source, except those emission units included on the trivial or insignificant activities list contained in 326 IAC 2-7-1(21) and 326 IAC 2-7-1(40). The renewal application does require a certification that meets the requirements of 326 IAC 2-7-6(1) by a "responsible official" as defined by 326 IAC 2-7-1(34).

Request for renewal shall be submitted to:

Indiana Department of Environmental Management
Permit Administration and Support Section, Office of Air Quality
100 North Senate Avenue
MC 61-53 IGCN 1003
Indianapolis, Indiana 46204-2251

(b) A timely renewal application is one that is:

(1) Submitted at least nine (9) months prior to the date of the expiration of this permit; and

(2) If the date postmarked on the envelope or certified mail receipt, or affixed by the shipper on the private shipping receipt, is on or before the date it is due. If the document is submitted by any other means, it shall be considered timely if received by IDEM, OAQ on or before the date it is due.

(c) If the Permittee submits a timely and complete application for renewal of this permit, the source's failure to have a permit is not a violation of 326 IAC 2-7 until IDEM, OAQ takes final action on the renewal application, except that this protection shall cease to apply if, subsequent to the completeness determination, the Permittee fails to submit by the deadline specified pursuant to 326 IAC 2-7-4(a)(2)(D), in writing by IDEM, OAQ any additional information identified as being needed to process the application.

B.17 Permit Amendment or Modification [326 IAC 2-7-11][326 IAC 2-7-12] [40 CFR 72]

(a) Permit amendments and modifications are governed by the requirements of 326 IAC 2-7-11 or 326 IAC 2-7-12 whenever the Permittee seeks to amend or modify this permit.

(b) Pursuant to 326 IAC 2-7-11(b) and 326 IAC 2-7-12(a), administrative Part 70 operating permit amendments and permit modifications for purposes of the acid rain portion of a Part 70 permit shall be governed by regulations promulgated under Title IV of the Clean Air Act. [40 CFR 72]

(c) Any application requesting an amendment or modification of this permit shall be submitted to:

Indiana Department of Environmental Management
Permit Administration and Support Section, Office of Air Quality
100 North Senate Avenue
MC 61-53 IGCN 1003
Indianapolis, Indiana 46204-2251

Any such application shall be certified by the "responsible official" as defined by 326 IAC 2-7-1(34).

(d) The Permittee may implement administrative amendment changes addressed in the request for an administrative amendment immediately upon submittal of the request. [326 IAC 2-7-11(c)(3)]

B.18 Permit Revision Under Economic Incentives and Other Programs [326 IAC 2-7-5(8)] [326 IAC 2-7-12(b)(2)]

(a) No Part 70 permit revision or notice shall be required under any approved economic incentives, marketable Part 70 permits, emissions trading, and other similar programs or processes for changes that are provided for in a Part 70 permit.

(b) Notwithstanding 326 IAC 2-7-12(b)(1) and 326 IAC 2-7-12(c)(1), minor Part 70 permit modification procedures may be used for Part 70 modifications involving the use of economic incentives, marketable Part 70 permits, emissions trading, and other similar approaches to the extent that such minor Part 70 permit modification procedures are explicitly provided for in the applicable State Implementation Plan (SIP) or in applicable requirements promulgated or approved by the U.S. EPA.

B.19 Operational Flexibility [326 IAC 2-7-20][326 IAC 2-7-10.5]

(a) The Permittee may make any change or changes at the source that are described in 326 IAC 2-7-20(b),(c), or (e) without a prior permit revision, if each of the following conditions is met:

(1) The changes are not modifications under any provision of Title I of the Clean Air Act;

(2) Any preconstruction approval required by 326 IAC 2-7-10.5 has been obtained;

(3) The changes do not result in emissions which exceed the limitations provided in this permit (whether expressed herein as a rate of emissions or in terms of total emissions);

(4) The Permittee notifies the:

Indiana Department of Environmental Management
Permit Administration and Support Section, Office of Air Quality
100 North Senate Avenue
MC 61-53 IGCN 1003
Indianapolis, Indiana 46204-2251

and

United States Environmental Protection Agency, Region V
Air and Radiation Division, Regulation Development Branch - Indiana (AR-18J)
77 West Jackson Boulevard
Chicago, Illinois 60604-3590

in advance of the change by written notification at least ten (10) days in advance of the proposed change. The Permittee shall attach every such notice to the Permittee's copy of this permit; and

(5) The Permittee maintains records on-site, on a rolling five (5) year basis, which document all such changes and emission trades that are subject to 326 IAC 2-7-20(b),(c), or (e). The Permittee shall make such records available, upon reasonable request, for public review.

Such records shall consist of all information required to be submitted to IDEM, OAQ in the notices specified in 326 IAC 2-7-20(b)(1), (c)(1), and (e)(2).

(b) The Permittee may make Section 502(b)(10) of the Clean Air Act changes (this term is defined at 326 IAC 2-7-1(36)) without a permit revision, subject to the constraint of 326 IAC 2-7-20(a). For each such Section 502(b)(10) of the Clean Air Act change, the required written notification shall include the following:

(1) A brief description of the change within the source;

(2) The date on which the change will occur;

(3) Any change in emissions; and

(4) Any permit term or condition that is no longer applicable as a result of the change.

The notification which shall be submitted is not considered an application form, report or compliance certification. Therefore, the notification by the Permittee does not require a certification that meets the requirements of 326 IAC 2-7-6(1) by a "responsible official" as defined by 326 IAC 2-7-1(34).

(c) Emission Trades [326 IAC 2-7-20(c)]
The Permittee may trade emissions increases and decreases at the source, where the applicable SIP provides for such emission trades without requiring a permit revision, subject to the constraints of Section (a) of this condition and those in 326 IAC 2-7-20(c).

(d) Alternative Operating Scenarios [326 IAC 2-7-20(d)]
The Permittee may make changes at the source within the range of alternative operating scenarios that are described in the terms and conditions of this permit in accordance with 326 IAC 2-7-5(9). No prior notification of IDEM, OAQ, or U.S. EPA is required.

(e) Backup fuel switches specifically addressed in, and limited under, Section D of this permit shall not be considered alternative operating scenarios. Therefore, the notification requirements of part (a) of this condition do not apply.

(f) This condition does not apply to emission trades of SO_2 or NO_X under 326 IAC 21 or 326 IAC 10-4.

B.20 Source Modification Requirement [326 IAC 2-7-10.5]

A modification, construction, or reconstruction is governed by the requirements of 326 IAC 2.

B.21 Inspection and Entry [326 IAC 2-7-6][IC 13-14-2-2][IC 13-30-3-1][IC 13-17-3-2]

Upon presentation of proper identification cards, credentials, and other documents as may be required by law, and subject to the Permittee’s right under all applicable laws and regulations to assert that the information collected by the agency is confidential and entitled to be treated as

such, the Permittee shall allow IDEM, OAQ, U.S. EPA, or an authorized representative to perform the following:

(a) Enter upon the Permittee's premises where a Part 70 source is located, or emissions related activity is conducted, or where records must be kept under the conditions of this permit;

(b) As authorized by the Clean Air Act, IC 13-14-2-2, IC 13-17-3-2, and IC 13-30-3-1, have access to and copy any records that must be kept under the conditions of this permit;

(c) As authorized by the Clean Air Act, IC 13-14-2-2, IC 13-17-3-2, and IC 13-30-3-1, inspect any facilities, equipment (including monitoring and air pollution control equipment), practices, or operations regulated or required under this permit;

(d) As authorized by the Clean Air Act, IC 13-14-2-2, IC 13-17-3-2, and IC 13-30-3-1, sample or monitor substances or parameters for the purpose of assuring compliance with this permit or applicable requirements; and

(e) As authorized by the Clean Air Act, IC 13-14-2-2, IC 13-17-3-2, and IC 13-30-3-1, utilize any photographic, recording, testing, monitoring, or other equipment for the purpose of assuring compliance with this permit or applicable requirements.

B.22 Transfer of Ownership or Operational Control [326 IAC 2-7-11]

(a) The Permittee must comply with the requirements of 326 IAC 2-7-11 whenever the Permittee seeks to change the ownership or operational control of the source and no other change in the permit is necessary.

(b) Any application requesting a change in the ownership or operational control of the source shall contain a written agreement containing a specific date for transfer of permit responsibility, coverage and liability between the current and new Permittee. The application shall be submitted to:

Indiana Department of Environmental Management
Permit Administration and Support Section, Office of Air Quality
100 North Senate Avenue
MC 61-53 IGCN 1003
Indianapolis, Indiana 46204-2251

The application which shall be submitted by the Permittee does require a certification that meets the requirements of 326 IAC 2-7-6(1) by a "responsible official" as defined by 326 IAC 2-7-1(34).

(c) The Permittee may implement administrative amendment changes addressed in the request for an administrative amendment immediately upon submittal of the request. [326 IAC 2-7-11(c)(3)]

B.23 Annual Fee Payment [326 IAC 2-7-19] [326 IAC 2-7-5(7)][326 IAC 2-1.1-7]

(a) The Permittee shall pay annual fees to IDEM, OAQ within thirty (30) calendar days of receipt of a billing. Pursuant to 326 IAC 2-7-19(b), if the Permittee does not receive a bill from IDEM, OAQ the applicable fee is due April 1 of each year.

(b) Except as provided in 326 IAC 2-7-19(e), failure to pay may result in administrative enforcement action or revocation of this permit.

(c) The Permittee may call the following telephone numbers: 1-800-451-6027 or 317-233-4230 (ask for OAQ, Billing, Licensing, and Training Section), to determine the appropriate permit fee.

B.24 Credible Evidence [326 IAC 2-7-5(3)][326 IAC 2-7-6][62 FR 8314] [326 IAC 1-1-6]

For the purpose of submitting compliance certifications or establishing whether or not the Permittee has violated or is in violation of any condition of this permit, nothing in this permit shall preclude the use, including the exclusive use, of any credible evidence or information relevant to whether the Permittee would have been in compliance with the condition of this permit if the appropriate performance or compliance test or procedure had been performed.

SECTION C **SOURCE OPERATION CONDITIONS**

Entire Source

Emission Limitations and Standards [326 IAC 2-7-5(1)]

C.1 Opacity [326 IAC 5-1]

Pursuant to 326 IAC 5-1-2 (Opacity Limitations), except as provided in 326 IAC 5-1-1 (Applicability) and 326 IAC 5-1-3 (Temporary Alternative Opacity Limitations), opacity shall meet the following, unless otherwise stated in this permit:

(a) Opacity shall not exceed an average of twenty percent (20%) in any one (1) six (6) minute averaging period as determined in 326 IAC 5-1-4.

(b) Opacity shall not exceed sixty percent (60%) for more than a cumulative total of fifteen (15) minutes (sixty (60) readings as measured according to 40 CFR 60, Appendix A, Method 9 or fifteen (15) one (1) minute nonoverlapping integrated averages for a continuous opacity monitor) in a six (6) hour period.

C.2 Open Burning [326 IAC 4-1] [IC 13-17-9]

The Permittee shall not open burn any material except as provided in 326 IAC 4-1-3, 326 IAC 4-1-4 or 326 IAC 4-1-6. The previous sentence notwithstanding, the Permittee may open burn in accordance with an open burning approval issued by the Commissioner under 326 IAC 4-1-4.1.

C.3 Incineration [326 IAC 4-2] [326 IAC 9-1-2]

The Permittee shall not operate an incinerator except as provided in 326 IAC 4-2 or in this permit. The Permittee shall not operate a refuse incinerator or refuse burning equipment except as provided in 326 IAC 9-1-2 or in this permit.

C.4 Fugitive Dust Emissions [326 IAC 6-4]

The Permittee shall not allow fugitive dust to escape beyond the property line or boundaries of the property, right-of-way, or easement on which the source is located, in a manner that would violate 326 IAC 6-4 (Fugitive Dust Emissions). 326 IAC 6-4-2(4) is not federally enforceable.

C.5 Fugitive Dust Emissions [326 IAC 6.8-10-3]

Pursuant to 326 IAC 6.8-10-3 (formerly 326 IAC 6-1-11.1) (Lake County Fugitive Particulate Matter Control Requirements), the particulate matter emissions from source wide activities shall meet the following requirements:

(a) The average instantaneous opacity of fugitive particulate emissions from a paved road shall not exceed ten percent (10%).

(b) The average instantaneous opacity of fugitive particulate emissions from an unpaved road shall not exceed ten percent (10%).

(c) The average instantaneous opacity of fugitive particulate emissions from batch transfer shall not exceed ten percent (10%).

(d) The opacity of fugitive particulate emissions from continuous transfer of material onto and out of storage piles shall not exceed ten percent (10%) on a three (3) minute average.

(e) The opacity of fugitive particulate emissions from storage piles shall not exceed ten percent (10%) on a six (6) minute average.

(f) There shall be a zero (0) percent frequency of visible emission observations of a material during the inplant transportation of material by truck or rail at any time.

(g) The opacity of fugitive particulate emissions from the inplant transportation of material by front end loaders and skip hoists shall not exceed ten percent (10%).

(h) There shall be a zero (0) percent frequency of visible emission observations from a building enclosing all or part of the material processing equipment, except from a vent in the building.

(i) The PM10 emissions from building vents shall not exceed twenty-two thousandths (0.022) grains per dry standard cubic foot and ten percent (10%) opacity.

(j) The opacity of particulate emissions from dust handling equipment shall not exceed ten percent (10%).

(k) The PM_{10} emissions from each material processing stack shall not exceed twenty-two thousandths (0.022) grains per dry standard cubic foot and ten percent (10%) opacity.

(l) Fugitive particulate matter from the material processing facilities shall not exceed ten percent (10%) opacity.

(m) Any facility or operation not specified in 326 IAC 6.8-10-3 shall meet a twenty percent (20%), three (3) minute average opacity standard.

The Permittee shall achieve these limits by controlling fugitive particulate matter emissions according to the attached Fugitive Dust Control Plan.

C.6 Stack Height [326 IAC 1-7]

The Permittee shall comply with the applicable provisions of 326 IAC 1-7 (Stack Height Provisions), for all exhaust stacks through which a potential (before controls) of twenty-five (25) tons per year or more of particulate matter or sulfur dioxide is emitted. The provisions of 326 IAC 1-7-1(3), 326 IAC 1-7-2, 326 IAC 1-7-3(c) and (d), 326 IAC 1-7-4, and 326 IAC 1-7-5(a), (b), and (d) are not federally enforceable.

C.7 Asbestos Abatement Projects [326 IAC 14-10] [326 IAC 18] [40 CFR 61, Subpart M]

The Permittee shall comply with the applicable requirements of 326 IAC 14-10, 326 IAC 18, and 40 CFR 61.140.

Testing Requirements [326 IAC 2-7-6(1)]

C.8 Performance Testing [326 IAC 3-6]

(a) For performance testing required by this permit, a test protocol, except as provided elsewhere in this permit, shall be submitted to:

Indiana Department of Environmental Management
Compliance and Enforcement Branch, Office of Air Quality
100 North Senate Avenue
MC 61-53 IGCN 1003
Indianapolis, Indiana 46204-2251

no later than thirty-five (35) days prior to the intended test date. The protocol submitted by the Permittee does not require a certification that meets the requirements of 326 IAC 2-7-6(1)by a "responsible official" as defined by 326 IAC 2-7-1(34).

(b) The Permittee shall notify IDEM, OAQ of the actual test date at least fourteen (14) days prior to the actual test date. The notification submitted by the Permittee does not require a certification that meets the requirements of 326 IAC 2-7-6(1)by a "responsible official" as defined by 326 IAC 2-7-1(34).

(c) Pursuant to 326 IAC 3-6-4(b), all test reports must be received by IDEM, not later than forty-five (45) days after the completion of the testing. An extension may be granted by IDEM, OAQ, if the Permittee submits to IDEM, OAQ, a reasonable written explanation not later than five (5) days prior to the end of the initial forty-five (45) day period. The extension request submitted by the Permittee does not require a certification that meets the requirements of 326 IAC 2-7-6(1) by a "responsible official" as defined by 326 IAC 2-7-1(34).

Compliance Requirements [326 IAC 2-1.1-11]

C.9 Compliance Requirements [326 IAC 2-1.1-11]

The commissioner may require stack testing, monitoring, or reporting at any time to assure compliance with all applicable requirements by issuing an order under 326 IAC 2-1.1-11. Any monitoring or testing shall be performed in accordance with 326 IAC 3 or other methods approved by the commissioner or the U. S. EPA.

Compliance Monitoring Requirements [326 IAC 2-7-5(1)][326 IAC 2-7-6(1)]

C.10 Compliance Monitoring [326 IAC 2-7-5(3)][326 IAC 2-7-6(1)]

Unless otherwise specified in this permit, for all monitoring requirements not already legally required, the Permittee shall be allowed up to ninety (90) days from the date of permit issuance or of initial start-up, whichever is later, to begin such monitoring. If due to circumstances beyond the Permittee's control, any monitoring equipment required by this permit cannot be installed and operated no later than ninety (90) days after permit issuance or the date of initial startup, whichever is later, the Permittee may extend the compliance schedule related to the equipment for an additional ninety (90) days provided the Permittee notifies:

Indiana Department of Environmental Management
Compliance and Enforcement Branch, Office of Air Quality
100 North Senate Avenue
MC 61-53 IGCN 1003
Indianapolis, Indiana 46204-2251

in writing, prior to the end of the initial ninety (90) day compliance schedule, with full justification of the reasons for the inability to meet this date.

The notification which shall be submitted by the Permittee does require a certification that meets the requirements of 326 IAC 2-7-6(1) by a "responsible official" as defined by 326 IAC 2-7-1(34).

Unless otherwise specified in the approval for the new emission unit(s), compliance monitoring for new emission units or emission units added through a source modification shall be implemented when operation begins.

C.11 Instrument Specifications [326 IAC 2-1.1-11] [326 IAC 2-7-5(3)] [326 IAC 2-7-6(1)]

(a) When required by any condition of this permit, an analog instrument used to measure a parameter related to the operation of an air pollution control device shall have a scale such that the expected maximum reading for the normal range shall be no less than twenty percent (20%) of full scale.

(b) The Permittee may request that the IDEM, OAQ approve the use of an instrument that does not meet the above specifications provided the Permittee can demonstrate that an

alternative instrument specification will adequately ensure compliance with permit conditions requiring the measurement of the parameters.

C.12 Continuous Compliance Plan [326 IAC 6.8-8-1] [326 IAC 6.8-8-8)]

(a) Pursuant to 326 IAC 326 IAC 6.8-8-1, the Permittee shall submit to IDEM and maintain at source a copy of the Continuous Compliance Plan (CCP). The Permittee shall perform the inspections, monitoring and record keeping in accordance with the information in 326 IAC 6.8-8-5 through 326 IAC 6.8-8-7 or applicable procedures in the CCP.

(b) Pursuant to 326 IAC 6.8-8-8, the Permittee shall update the CCP, as needed, retain a copy of any changes and updates to the CCP at the source and make the updated CCP available for inspection by the department. The Permittee shall submit the updated CCP, if required to IDEM, OAQ within thirty (30) days of the update.

(c) Pursuant to 326 IAC 6.8-8, failure to submit a CCP, maintain all information required by the CCP at the source, or submit update to a CCP is a violation of 326 IAC 6.8-8.

Corrective Actions and Response Steps [326 IAC 2-7-5][326 IAC 2-7-6]

C.13 Emergency Reduction Plans [326 IAC 1-5-2] [326 IAC 1-5-3]

Pursuant to 326 IAC 1-5-2 (Emergency Reduction Plans; Submission):

(a) The Permittee prepared and submitted written emergency reduction plans (ERPs) consistent with safe operating procedures on June 18, 2003.

(b) Upon direct notification by IDEM, OAQ that a specific air pollution episode level is in effect, the Permittee shall immediately put into effect the actions stipulated in the approved ERP for the appropriate episode level. [326 IAC 1-5-3]

C.14 Risk Management Plan [326 IAC 2-7-5(12)] [40 CFR 68]

If a regulated substance, as defined in 40 CFR 68, is present at a source in more than a threshold quantity, the Permittee must comply with the applicable requirements of 40 CFR 68.

C.15 Response to Excursions or Exceedances [326 IAC 2-7-5] [326 IAC 2-7-6]

Upon detecting an excursion where a response step is required by the D Section or an exceedance of a limitation in this permit:

(a) The Permittee shall take reasonable response steps to restore operation of the emissions unit (including any control device and associated capture system) to its normal or usual manner of operation as expeditiously as practicable in accordance with good air pollution control practices for minimizing excess emissions.

(b) The response shall include minimizing the period of any startup, shutdown or malfunction. The response may include, but is not limited to, the following:

(1) initial inspection and evaluation;

(2) recording that operations returned or are returning to normal without operator action (such as through response by a computerized distribution control system); or

(3) any necessary follow-up actions to return operation to normal or usual manner of operation.

(c) A determination of whether the Permittee has used acceptable procedures in response to an excursion or exceedance will be based on information available, which may include, but is not necessarily limited to, the following:

(1) monitoring results;

(2) review of operation and maintenance procedures and records; and/or

(3) inspection of the control device, associated capture system, and the process.

(d) Failure to take reasonable response steps shall be considered a deviation from the permit.

(e) The Permittee shall record the reasonable response steps taken.

C.16 Actions Related to Noncompliance Demonstrated by a Stack Test [326 IAC 2-7-5][326 IAC 2-7-6]

(a) When the results of a stack test performed in conformance with Section C - Performance Testing, of this permit exceed the level specified in any condition of this permit, the Permittee shall submit a description of its response actions to IDEM, OAQ, no later than seventy-five (75) days after the date of the test.

(b) A retest to demonstrate compliance shall be performed no later than one hundred eighty (180) days after the date of the test. Should the Permittee demonstrate to IDEM, OAQ that retesting in one-hundred eighty (180) days is not practicable, IDEM, OAQ may extend the retesting deadline.

(c) IDEM, OAQ reserves the authority to take any actions allowed under law in response to noncompliant stack tests.

The response action documents submitted pursuant to this condition do require a certification that meet the requirements of 326 IAC 2-7-6(1) by a “responsible official” as defined by 326 IAC 2-7-1(34).

Record Keeping and Reporting Requirements [326 IAC 2-7-5(3)] [326 IAC 2-7-19]

C.17 Emission Statement [326 IAC 2-7-5(3)(C)(iii)][326 IAC 2-7-5(7)][326 IAC 2-7-19(c)][326 IAC 2-6]

Pursuant to 326 IAC 2-6-3(a)(1), the Permittee shall submit no later than July 1 of each year an emission statement covering the previous calendar year. The emission statement shall contain, at a minimum, the information specified in 326 IAC 2-6-4(c) and shall meet the following requirements:

(a) Indicate estimated actual emissions of all pollutants listed in 326 IAC 2-6-4(a);

(b) Indicate estimated actual emissions of regulated pollutants as defined by 326 IAC 2-7-1 (32) (“Regulated pollutant, which is used only for purposes of Section 19 of this rule”) from the source, for purpose of fee assessment.

The statement must be submitted to:

Indiana Department of Environmental Management
Technical Support and Modeling Section, Office of Air Quality
100 North Senate Avenue
MC 61-50 IGCN 1003
Indianapolis, Indiana 46204-2251

The emission statement does require a certification that meets the requirement of 326 IAC 2-7-6(1) by a "responsible official" as defined by 326 IAC 2-7-1(34).

C.18 General Record Keeping Requirements [326 IAC 2-7-5(3)] [326 IAC 2-7-6] [326 IAC 2-2] [326 IAC 2-3]

(a) Records of all required monitoring data, reports and support information required by this permit shall be retained for a period of at least five (5) years from the date of monitoring sample, measurement, report, or application. These records shall be physically present or electronically accessible at the source location for a minimum of three (3) years. The records may be stored elsewhere for the remaining two (2) years as long as they are available upon request. If the Commissioner makes a request for records to the Permittee, the Permittee shall furnish the records to the Commissioner within a reasonable time.

(b) Unless otherwise specified in this permit, for all record keeping requirements not already legally required, the Permittee shall be allowed up to ninety (90) days from the date of permit issuance or ninety (90) days of initial start-up, whichever is later, to begin such record keeping.

(c) If there is a reasonable possibility (as defined in 40 CFR 51.165(a)(6)(vi)(A), 40 CFR 51.165(a)(6)(vi)(B), 40 CFR 51.166(r)(6)(vi)(a), and/or 40 CFR 51.166(r)(6)(vi)(b)) that a "project" (as defined in 326 IAC 2-2-1(qq) and/or 326 IAC 2-3-1(ll)) at an existing emissions unit, other than projects at a source with a Plantwide Applicability Limitation (PAL), which is not part of a "major modification" (as defined in 326 IAC 2-2-1(ee) and/or 326 IAC 2-3-1(z)) may result in significant emissions increase and the Permittee elects to utilize the "projected actual emissions" (as defined in 326 IAC 2-2-1(rr) and/or 326 IAC 2-3-1(mm)), the Permittee shall comply with following:

(1) Before beginning actual construction of the "project" (as defined in 326 IAC 2-2-1(qq) and/or 326 IAC 2-3-1(ll)) at an existing emissions unit, document and maintain the following records:

(A) A description of the project.

(B) Identification of any emissions unit whose emissions of a regulated new source review pollutant could be affected by the project.

(C) A description of the applicability test used to determine that the project is not a major modification for any regulated NSR pollutant, including:

(i) Baseline actual emissions;

(ii) Projected actual emissions;

(iii) Amount of emissions excluded under section 326 IAC 2-2-1(rr)(2)(A)(iii) and/or 326 IAC 2-3-1 (mm)(2)(A)(iii); and

(iv) An explanation for why the amount was excluded, and any netting calculations, if applicable.

(d) If there is a reasonable possibility (as defined in 40 CFR 51.165(a)(6)(vi)(A) and/or 40 CFR 51.166(r)(6)(vi)(a)) that a "project" (as defined in 326 IAC 2-2-1(qq) and/or 326 IAC 2-3-1(ll)) at an existing emissions unit, other than projects at a source with a Plantwide Applicability Limitation (PAL), which is not part of a "major modification" (as

defined in 326 IAC 2-2-1(ee) and/or 326 IAC 2-3-1(z)) may result in significant emissions increase and the Permittee elects to utilize the "projected actual emissions" (as defined in 326 IAC 2-2-1(rr) and/or 326 IAC 2-3-1(mm)), the Permittee shall comply with following:

(1) Monitor the emissions of any regulated NSR pollutant that could increase as a result of the project and that is emitted by any existing emissions unit identified in (1)(B) above; and

(2) Calculate and maintain a record of the annual emissions, in tons per year on a calendar year basis, for a period of five (5) years following resumption of regular operations after the change, or for a period of ten (10) years following resumption of regular operations after the change if the project increases the design capacity of or the potential to emit that regulated NSR pollutant at the emissions unit.

C.19 General Reporting Requirements [326 IAC 2-7-5(3)(C)] [326 IAC 2-1.1-11] [326 IAC 2-3]

(a) Any deviation from permit requirements, the date(s) of each deviation, the cause of the deviation, and the response steps taken must be reported except that a deviation required to be reported pursuant to an applicable requirement that exists independent of this permit, shall be reported according to the schedule stated in the applicable requirement and does not need to be included in this report. This report shall be submitted not later than thirty (30) days after the end of the reporting period. The Quarterly Deviation and Compliance Monitoring Report shall include a certification that meets the requirements of 326 IAC 2-7-6(1) by a "responsible official" as defined by 326 IAC 2-7-1(34). A deviation is an exceedance of a permit limitation or a failure to comply with a requirement of the permit.

(b) The address for report submittal is:

Indiana Department of Environmental Management
Compliance and Enforcement Branch, Office of Air Quality
100 North Senate Avenue
MC 61-53 IGCN 1003
Indianapolis, Indiana 46204-2251

(c) Unless otherwise specified in this permit, any notice, report, or other submission required by this permit shall be considered timely if the date postmarked on the envelope or certified mail receipt, or affixed by the shipper on the private shipping receipt, is on or before the date it is due. If the document is submitted by any other means, it shall be considered timely if received by IDEM, OAQ on or before the date it is due.

(d) The first report shall cover the period commencing on the date of issuance of this permit or the date of initial start-up, whichever is later, and ending on the last day of the reporting period. Reporting periods are based on calendar years, unless otherwise specified in this permit. For the purpose of this permit "calendar year" means the twelve (12) month period from January 1 to December 31 inclusive.

(e) If the Permittee is required to comply with the recordkeeping provisions of (d) in Section C - General Record Keeping Requirements for any "project" (as defined in 326 IAC 2-2-1 (qq) and/or 326 IAC 2-3-1 (ll)) at an existing emissions unit, and the project meets the following criteria, then the Permittee shall submit a report to IDEM, OAQ:

(1) The annual emissions, in tons per year, from the project identified in (c)(1) in Section C- General Record Keeping Requirements exceed the baseline actual emissions, as documented and maintained under Section C- General Record Keeping Requirements (c)(1)(C)(i), by a significant amount, as defined in

326 IAC 2-2-1 (xx) and/or 326 IAC 2-3-1 (qq), for that regulated NSR pollutant, and

(2) The emissions differ from the preconstruction projection as documented and maintained under Section C - General Record Keeping Requirements (c)(1)(C)(ii).

(f) The report for project at an existing emissions unit shall be submitted within sixty (60) days after the end of the year and contain the following:

(1) The name, address, and telephone number of the major stationary source.

(2) The annual emissions calculated in accordance with (d)(1) and (2) in Section C - General Record Keeping Requirements.

(3) The emissions calculated under the actual-to-projected actual test stated in 326 IAC 2-2-2(d)(3) and/or 326 IAC 2-3-2(c)(3).

(4) Any other information that the Permittee wishes to include in this report such as an explanation as to why the emissions differ from the preconstruction project.

Reports required in this part shall be submitted to:

Indiana Department of Environmental Management
Compliance and Enforcement Branch, Office of Air Quality
100 North Senate Avenue
MC 61-53 IGCN 1003
Indianapolis, Indiana 46204-2251

(g) The Permittee shall make the information required to be documented and maintained in accordance with (c) in Section C- General Record Keeping Requirements available for review upon a request for inspection by IDEM, OAQ. The general public may request this information from the IDEM, OAQ under 326 IAC 17.1.

Stratospheric Ozone Protection

C.20 Compliance with 40 CFR 82 and 326 IAC 22-1

Pursuant to 40 CFR 82 (Protection of Stratospheric Ozone), Subpart F, except as provided for motor vehicle air conditioners in Subpart B, the Permittee shall comply with the standards for recycling and emissions reduction:

SECTION D.0 EMISSIONS UNIT OPERATION CONDITIONS

Emissions Unit Description:

Entire Source

(The information describing the process contained in this emissions unit description box is descriptive information and does not constitute enforceable conditions.)

Emission Limitations and Standards [326 IAC 2-7-5(1)]

D.0.1 Prevention of Significant Deterioration (PSD) Minor Limits [326 IAC 2-2]

The Permittee shall comply with the following:

(a) PM emissions from Conditions D.1.4, D.2.5, D.3.5, and D.4.3 shall be less than 99.85 tons per twelve (12) consecutive month period with compliance determined at the end of each month.

(b) PM_{10} emissions from Conditions D.1.4, D.2.5, D.3.5, and D.4.3 shall be less than 99.01 tons per twelve (12) consecutive month period with compliance determined at the end of each month.

Compliance with these limits in combination with other PM and PM_{10} emissions from the source will limit the PM and PM_{10} to less than one hundred (< 100) tons per year each and render 326 IAC 2-2, Prevention of Significant Deterioration (PSD), not applicable to this source.

D.0.2 Nonattainment New Source Review (NSR) Minor Limit [326 IAC 2-1.1-5]

$PM_{2.5}$ emissions from the entire source shall be less than 99.01 tons per twelve (12) consecutive month period with compliance determined at the end of each month.

Compliance with this limit combined with the potential $PM_{2.5}$ emissions from other emission units shall limit $PM_{2.5}$ emissions to less than one hundred (< 100) tons per year and render 326 IAC 2-1.1-5, Nonattainment NSR, not applicable to this source.

D.0.3 IDEM Settlement Agreement Case #2002-12585-A

VOC emissions from Conditions D.1.4, D.2.5, D.3.5**,** and D.4.3 shall be less than 99.22 tons per twelve (12) consecutive month period with compliance determined at the end of each month.

Compliance with this limit combined with the potential VOC emissions from other emission units shall limit VOC emissions to less than one hundred (< 100) tons per year per the Agreement.

D.0.4 Specific VOC Reduction Requirements for Lake County [326 IAC 8-7]

Pursuant to 326 IAC 8-7-3, VOC emissions shall be reduced by implementing one of the two emission reduction measures outlined below.

(a) Achieve an overall VOC reduction from baseline actual emissions of at least ninety-eight percent (98%) by the documented reduction in use of VOC containing materials or install an add-on control system that achieves an overall control efficiency of ninety-eight percent (98%).

Or

(b) Where it can be demostrated by the source that control technology does not exist that is reasonably available and both technologically and economically feasible to achieve a

ninety - eight percent (98%) reduction in VOC emissions, a source shall achieve an overall VOC reduction of at least eighty-one percent (81%) from baseline actual emissions with the documented reduction in use of VOC containing materials or install an add-on control system that achieves an overall control efficiency of eighty-one percent (81%).

Compliance Determination Requirements [326 IAC 2-7-6(1)][326 IAC 2-7-5(1)]

D.0.5 PM, PM_{10}, VOC, and $PM_{2.5}$ Compliance Determination

PM, PM_{10}, $PM_{2.5}$ and VOC emission limits in Conditions D.0.1, D.0.2, and D.0.3 shall be determined using the following equations:

PM emissions = PM emissions calculated in Conditions D.1.4, D.2.5, D.3.5, and D.4.3.

PM_{10} emissions = PM_{10} emissions calculated in Conditions D.1.4, D.2.5, D.3.5, and D.4.3

$PM_{2.5}$ emissions = $PM_{2.5}$ emissions calculated in Conditions D.1.4, D.2.5, D.3.5, and D.4.3.

VOC emissions = VOC emissions calculated in Conditions D.1.4, D.2.5, D.3.5, and D.4.3.

Record Keeping and Reporting Requirements [326 IAC 2-7-5(3)] [326 IAC 2-7-19]

D.0.6 Reporting Requirements

A quarterly summary of the information to document the compliance status with Conditions D.0.1, D.0.2, and D.0.3 shall be submitted using the reporting forms located at the end of this permit, or their equivalent, not later than thirty (30) days following the end of each calendar quarter. The report submitted by the Permittee does require a certification that meets the requirements of 326 IAC 2-7-6(1) by a “responsible official” as defined by 326 IAC 2-7-1(34). Section C - General Reporting Requirements contains the Permittee's obligations with regard to the reporting required by this condition.

SECTION D.1 EMISSIONS UNIT OPERATION CONDITIONS

Emissions Unit Description:

(c) Annealing Furnace #1 (AS-3)
One (1) natural gas-fired annealing furnace, identified as Annealing Furnace #1, modified in 1995, with a rated capacity of 4.86 tons of aluminum coil per hour and a heat input capacity of 9.0 MMBtu/hr, using a fume filtration system (FFS-AN1) to control visible emissions from the annealing process (stack AS-3.3), and exhausting (combustion gas only) to stacks AS-3.1 and 3.2.

(d) Annealing Furnace #2 (AS-4)
One (1) natural gas-fired annealing furnace, identified as Annealing Furnace #2, installed in 1988, with a rated capacity of 4.86 tons of aluminum coil per hour and a heat input capacity of 16.0 MMBtu/hr, using a fume filtration system (FFS-AN2) to control visible emissions from the annealing process (stack AS-4.5), and exhausting (combustion gas only) to stacks AS-4.1, 4.2, 4.3, and 4.4.

(e) Annealing Furnace #3 (AS-5)
One (1) natural gas-fired annealing furnace, identified as Annealing Furnace #3, installed in 1989, with a rated capacity of 4.86 tons of aluminum coil per hour and a heat input capacity of 16.0 MMBtu/hr, using a fume filtration system (FFS-AN3) to control visible emissions from the annealing process (stack AS-5.4), and exhausting (combustion gas only) to stacks AS-5.1, 5.2, and 5.3.

(f) Annealing Furnace #4 (AS-6)
One (1) natural gas-fired annealing furnace, identified as Annealing Furnace #4, installed in 1999, with a rated capacity of 4.86 tons of aluminum coil per hour and a heat input capacity of 13.5 MMBtu/hr, using a fume filtration system (FFS-AN4) to control visible emissions from the annealing process (stack AS-6.1), and exhausting (combustion gas only) to stack AS-6.2.

(g) Annealing Furnace #5 (AS-7)
One (1) natural gas-fired annealing furnace, identified as Annealing Furnace #5, installed in 1999, with a rated capacity of 4.86 tons of aluminum coil per hour and a heat input capacity of 13.5 MMBtu/hr, using a fume filtration system (FFS-AN5) to control visible emissions from the annealing process (stack AS-7.1), and exhausting (combustion gas only) to stack AS-7.2.

(h) Annealing Furnace #6 (AS-8)
One (1) natural gas-fired annealing furnace, identified as Annealing Furnace #6, installed in 2011, with a rated capacity of 9.73 tons of aluminum coil per hour and a heat input capacity of 20 MMBtu/hr, using a fume filtration system (FFS-AN6) to control visible emissions from the annealing process (stack AS-21A), and exhausting (combustion gas only) to stack S-21.

(The information describing the process contained in this emissions unit description box is descriptive information and does not constitute enforceable conditions.)

Emission Limitations and Standards [326 IAC 2-7-5(1)]

D.1.1 Particulate Matter less than ten (10) microns in diameter (PM_{10}) [326 IAC 6.8]

(a) Pursuant to 326 IAC 6.8-2-18, Annealing Furnaces #1, #2, and #3 shall fire natural gas

only.

(b) Pursuant to 326 IAC 6.8-1-2, particulate matter emissions from Annealing Furnaces #4, #5, and #6 shall not exceed 0.03 grain per dry standard cubic foot (dscf).

D.1.2 Preventive Maintenance Plan [326 IAC 2-7-5(13)]

A Preventive Maintenance Plan (PMP) is required for this unit and its control device. Section B - Preventive Maintenance Plan contains the Permittee's obligations with regard to the preventive maintenance plan required by this condition.

Compliance Determination Requirements [326 IAC 2-7-6(1)][326 IAC 2-7-5(1)]

D.1.3 Testing Requirements [326 IAC 2-7-6(1)] [326 IAC 2-1.1-11] [326 IAC 2-2] [326 IAC 2-1.1-5]

(a) In order to demonstrate compliance status with Condition D.0.1, the Permittee shall perform PM and PM_{10} stack testing by October 2011 at the exhaust of the fume filtration system of either Annealing Furnace #4 or #5 utilizing methods as approved by the Commissioner. This test shall be repeated at least once every five (5) years from the date of this valid compliance demonstration. Testing shall be conducted in accordance with the provisions of 326 IAC 3-6 (Source Sampling Procedures). Section C - Performance Testing contains the Permittee's obligations with regard to the performance testing required by this condition. PM_{10} includes filterable and condensable PM10.

(b) In order to demonstrate compliance status with Condition D.0.3, the Permittee shall perform VOC stack testing by October 2011 at the exhaust of the fume filtration system of either Annealing Furnace #4 or #5 utilizing methods as approved by the Commissioner. This test shall be repeated at least once every five (5) years from the date of this valid compliance demonstration. Testing shall be conducted in accordance with the provisions of 326 IAC 3-6 (Source Sampling Procedures). Section C - Performance Testing contains the Permittee's obligations with regard to the performance testing required by this condition.

(c) In order to demonstrate compliance status with Condition D.0.2, the Permittee shall perform PM2.5 testing at the exhaust of the fume filtration system on either of the Annealing Furnace #4 or #5, within 180 days of publication of the new or revised condensable PM2.5 test method(s) referenced in the U. S. EPA's Final Rule for Implementation of the New Source Review (NSR) Program for Particulate Matter Less Than 2.5 Micrometers (PM2.5), signed on May 8th, 2008. This testing shall be conducted at least once every five (5) years utilizing methods as approved by the Commissioner. Testing shall be conducted in accordance with the provisions of 326 IAC 3-6 (Source Sampling Procedures). Section C - Performance Testing contains the Permittee's obligations with regard to the performance testing required by this condition. PM2.5 includes filterable and condensable PM2.5.

D.1.4 PM, PM_{10}, $PM_{2.5}$, and VOC Calculations

Emissions of PM, PM_{10}, $PM_{2.5}$, and VOC in Conditions D.0.1, D.0.2, and D.0.3 shall be determined using the following equations (emission limits are based on the Permittee's Minor Application):

(a) PM, PM_{10}, and $PM_{2.5}$ emissions from annealing furnace in tons per month = [E_{af} (lbs/ton) x M_{af} (tons/month) + Eg (lbs/mmcf) x Ng (mmcf/month)] x (1 ton/2000 pounds).

Where:
E_{af} = 8.696E-6 pounds PM, PM_{10}, and $PM_{2.5}$ per ton of metal throughput or the emission

factor determined from the most recent IDEM approved stack test; and
M_{af}= total metal throughput to the Annealing Furnace (tons/month).
Eg PM_{10} = 7.6 lbs/mmcf, Emission factor from AP-42 Chapter 1.4 Table 1.4-2 July 1998 or the most current factor from the applicable section of AP-42.
Eg PM = 1.9 lbs/mmcf, Emission factor from AP-42 Chapter 1.4 Table 1.4-2 July 1998 or the most current factor from the applicable section of AP-42.
Ng = Amount of natural gas burned in annealing furnaces.

(b) VOC emissions from the Annealing Furnaces in tons per month =
(E_v (lbs/ton) x M_v (tons/month) + 5.5 lbs/mmcf x Ng (mmcf/month) x (1 ton/2000 pounds).

Where:
E_v = 0.20 pounds VOC per ton of metal throughput or the emission factor determined from the most recent IDEM approved stack test; and
M_v = total metal throughput to the furnaces (tons/month).
5.5 lbs/mmcf = Emission factor from AP- 42 Chapter 1.4 Table 1.4-2 July 1998 or the most current factor from the applicable section of AP-42.
Ng = Amount of natural gas burned in annealing furnaces

Record Keeping Requirements [326 IAC 2-7-5(3)] [326 IAC 2-7-19]

D.1.5 Record Keeping Requirement

(a) To document the compliance status with Condition D.1.4, the Permittee shall record the tons of aluminum coil processed each month for the annealing furnaces. The Permittee shall also keep a record of the most recent valid PM, PM_{10}, $PM_{2.5}$, and VOC emission factors for the annealing furnaces.

(b) To document the compliance status with Condition D.1.4, the Permittee shall maintain a log of monthly natural gas usage from the annealing furnaces.

(c) Section C - General Record Keeping Requirements, contains the Permittee's obligation with regard to the records required by this condition.

SECTION D.2 EMISSIONS UNIT OPERATION CONDITIONS

Emissions Unit Description:

Aluminum Melting Furnaces & Dross Cooling Subject to 40 CFR 63, Subpart RRR

(i) Aluminum Reverberatory Furnace #2 (MS-1A)
One (1) aluminum reverberatory furnace, identified as Furnace #2, modified in 2000, with a rated scrap aluminum feed/charge capacity of 18 tons per hour and a heat input capacity of 20 MMBtu/hr using natural gas or waste oil, using baghouses (BHS-9 and BHS-12) as control, and exhausting to stacks S-19 and S-11. Under NESHAP 40 CFR 63, Subpart RRR, Furnace #2 is defined as a Sidewell Group 1 furnace with add-on control.

(j) Aluminum Reverberatory Furnace #6 (MS-1E)
One (1) aluminum reverberatory furnace, identified as Furnace #6, modified in 1998, with a rated scrap aluminum feed/charge capacity of 18 tons per hour and a heat input capacity of 20 MMBtu/hr using natural gas or waste oil, using baghouses (BHS-6 and 7) as control, and exhausting to stacks S-12 and S-11. Under NESHAP 40 CFR 63, Subpart RRR, Furnace #6 is defined as a Sidewell Group 1 furnace with add-on control.

(k) Aluminum Reverberatory Furnace #9 (MS-1H)
One (1) aluminum reverberatory furnace, identified as Furnace #9, approved in 2008 for construction, with a rated scrap aluminum feed/charge capacity of 18 tons per hour and a heat input capacity of 20 MMBtu/hr using natural gas or waste oil, using a baghouse (BHS-11) as control, and exhausting to stack S-23. Under NESHAP 40 CFR 63, Subpart RRR, Furnace #9 is defined as a Sidewell Group 1 furnace with add-on control.

(l) Holding Furnace (HS-2)
One (1) aluminum holding furnace, identified as Holding Furnace #1, installed in 1985 and rebuilt in 2007, receiving and holding molten aluminum prior to casting, with a heat input capacity of 10 MMBtu/hr using natural gas only, and exhausting to stack S-16. Under NESHAP 40 CFR 63, Subpart RRR, Holding Furnace #1 is defined as a Group 2 furnace that holds or processes only clean charge.

(m) Rotary Dross Cooler (DC-1)
One (1) rotary dross cooler, identified as the Rotary Dross Cooler, approved in 2008 for construction, with a rated aluminum dross process capacity of 4.0 tons per hour, using a jet pulse baghouse (BHS-10) as control, and exhausting to stack S-22. Under NESHAP 40 CFR 63, Subpart RRR, Rotary Dross Cooler (DC-1) is defined as a rotary dross cooler with emissions controlled by a fabric filter.

(n) Dross Cooling Operation
One (1) dross cooling operation, processing up to 4.0 tons of aluminum dross per hour, utilizing a dross press to reduce fugitive emissions, and exhausting into the building. [Dross Cooling Operation is not Subject to 40 CFR Subpart RRR].

(The information describing the process contained in this emissions unit description box is descriptive information and does not constitute enforceable conditions.)

Emission Limitations and Standards [326 IAC 2-7-5(1)]

D.2.1 Particulate Matter (PM) [326 IAC 6.8]

(a) Pursuant to 326 IAC 6.8-1-2, emissions of particulate matter from Reverb Furnaces #2, #6, and #9, Holding Furnace #1 and the Rotary Dross Cooler shall not exceed three-hundredths (0.03) grain per dry standard cubic foot (dscf).

(b) Pursuant to 326 IAC 6.8-2-18, emissions of particulate matter less than ten (10) microns in diameter (PM_{10}) shall not exceed the following:

Unit ID:	PM_{10} Emissions Limit	
Reverberatory Furnace #2	0.130 lbs/ton	1.137 lbs/hr
Reverberatory Furnace #6	0.060 lbs/ton	0.970 lbs/hr

D.2.2 Lake County Sulfur Dioxide Emission Limitations [326 IAC 7-4.1-1]

Pursuant to 326 IAC 7-4.1-1, all furnaces that burn waste “used” oil as an alternate fuel shall be limited to sulfur dioxide emissions of three-tenths (0.3) pounds per million Btu. Furnaces #2, #6, and #9 are permitted to burn waste oil.

Compliance Determination Requirements [326 IAC 2-7-6(1)][326 IAC 2-7-5(1)]

D.2.3 Particulate Control

In order to ensure compliance with Condition D.2.1, the baghouses for particulate control shall be in operation and control emissions at all times that the furnaces are in operation. When a furnace is operating in stand-by mode (i.e., no fresh material is being charged and fuel is being burned to maintain furnace temperature to prevent equipment damage), the baghouse may be temporarily shut down for maintenance activities at the baghouse.

D.2.4 Testing Requirements [326 IAC 2-7-6(1)] [326 IAC 2-1.1-11] [326 IAC 2-2] [326 IAC 2-1.1-5]

(a) Within ninety (90) days of the capture system upgrades of both furnaces, in order to demonstrate compliance status with the particulate matter emissions, the Permittee shall perform PM and PM_{10} stack testing at the baghouse exhaust of Furnaces #2 and #6 utilizing methods as approved by the Commissioner. This test shall be repeated at least once every five (5) years from the date of this valid compliance demonstration. Testing shall be conducted in accordance with the provisions of 326 IAC 3-6 (Source Sampling Procedures). Section C - Performance Testing contains the Permittee's obligations with regard to the performance testing required by this condition. PM_{10} includes filterable and condensable PM10.

(b) Within ninety (90) days of start-up, in order to demonstrate compliance status with the particulate matter emissions, the Permittee shall perform PM and PM_{10} stack testing at the baghouse exhaust of Furnace #9 and the baghouse exhaust of the Rotary Dross Cooler utilizing methods as approved by the Commissioner. This test shall be repeated at least once every five (5) years from the date of this valid compliance demonstration. Testing shall be conducted in accordance with the provisions of 326 IAC 3-6 (Source Sampling Procedures). Section C - Performance Testing contains the Permittee's obligations with regard to the performance testing required by this condition. PM_{10} includes filterable and condensable PM10.

(c) Within ninety (90) days of the capture system upgrades of both furnaces, in order to demonstrate compliance status with the volatile organic compounds emissions, the Permittee shall perform VOC stack testing at the exhaust of Furnace #2 and #6, utilizing methods as approved by the Commissioner. This test shall be repeated at least once every five (5) years from the date of this valid compliance demonstration. Testing shall be conducted in accordance with the provisions of 326 IAC 3-6 (Source Sampling Procedures). Section C - Performance Testing contains the Permittee's obligations with regard to the performance testing required by this condition.

(d) Within ninety (90) days of start-up, in order to demonstrate compliance status with the volatile organic compounds emissions, the Permittee shall perform VOC stack testing at the exhaust of Furnace #9 utilizing methods as approved by the Commissioner. This test shall be repeated at least once every five (5) years from the date of this valid compliance demonstration. Testing shall be conducted in accordance with the provisions of 326 IAC 3-6 (Source Sampling Procedures). Section C - Performance Testing contains the Permittee's obligations with regard to the performance testing required by this condition.

(e) Within ninety (90) days of start-up, in order to demonstrate compliance status with Condition D.0.2, the Permittee shall perform PM2.5 testing on the baghouse exhaust of the Rotary Dross Cooler, and Furnace #2, #6 and #9. This testing shall be conducted at least once every five (5) years utilizing methods as approved by the Commissioner. Testing shall be conducted in accordance with the provisions of 326 IAC 3-6 (Source Sampling Procedures). Section C - Performance Testing contains the Permittee's obligations with regard to the performance testing required by this condition.

(f) Within ninety (90) days of configuring furnace #2, #6 and #9 to combust waste oil, the Permittee shall perform PM, PM10, PM2.5 and VOC stack testing at one of the furnaces firing waste oil. Stack testing shall be conducted at the baghouse exhaust of the furnace being tested utilizing methods as approved by the commissioner. This test shall be repeated at least once every five (5) years from the date of this valid compliance demonstration. Testing shall be conducted in accordance with the provisions of 326 IAC 3-6 (Source Sampling Procedures). Section C - Performance Testing contains the Permittee's obligations with regard to the performance testing required by this condition.

D.2.5 PM, PM_{10}, $PM_{2.5}$, and VOC Calculations

Emissions of PM, PM_{10}, $PM_{2.5}$, and VOC in Conditions D.0.1, D.0.2, and D.0.3 shall be determined using the following equations (emission limits are based on the Permittee's Minor Application):

(a) PM, PM_{10}, and $PM_{2.5}$ emissions from Furnaces #2, #6, and #9 in tons per month = [E_f (lbs/ton) x M_f (tons/month) + Eg (lbs/mmcf) x Ng (mmcf/month) + Ewo (lbs/10^3 gal/month) x WO (lbs/10^3 gal/month)] x 1 (ton/2000 pounds).

Where:
E_f = 0.23 pounds PM, PM_{10}, and $PM_{2.5}$ per ton of metal throughput or the emission factor determined from the most recent IDEM approved stack test; and
M_f= total metal throughput to the three (3) furnaces (tons/month).
E_f = 0.21 lbs/ton when using natural gas; and
Eg PM_{10} = 7.6 lbs/mmcf, Emission factor from AP-42 Chapter 1.4 Table 1.4-2 July 1998 or the most current factor from the applicable section of AP-42.
Eg PM = 1.9 lbs/mmcf, Emission factor from AP-42 Chapter 1.4 Table 1.4-2 July 1998 or the most current factor from the applicable section of AP-42.
Ng = Amount of natural gas burned in furnaces.

Ewo PM_{10} =51A lbs/10^3gal, Emission factor from AP-42 Chapter 1.11 Table 1.11-1 October 1996 where A is the percent ash content, or the most current factor from the applicable section of AP-42.
Ewo PM=64A lbs/10^3gal, Emission factor from AP-42 Chapter 1.11 Table 1.11-1 October 1996 where A is the percent ash content, or the most current factor from the applicable section of AP-42.
WO = Amount of waste oil burned in furnaces.

(b) PM, PM_{10}, and $PM_{2.5}$ emissions from the Rotary Dross Cooler in tons per month = E_c [(lbs/ton) x M_c (tons/month)]x (1 ton/2000 pounds).

Where:
E_c = 0.79 pounds PM, PM_{10}, and $PM_{2.5}$ per ton of metal throughput or the emission factor determined from the most recent IDEM approved stack test; and
M_c = total metal throughput to the Rotary Dross Cooler (tons/month).

(c) VOC emissions from Furnaces #2, #6, and #9 in tons per month = [E_v (lbs/ton) x M_v (tons/month) + Eg (lbs/mmcf) x Ng (mmcf/month) + Ewo (lbs/10^3 gal/month) x WO (lbs/10^3 gal/month)] x 1 (ton/2000 pounds).

Where:
E_v = 0.090 pounds VOC per ton of metal throughput for Furnace #6, 0.091 pounds of VOC per ton of metal throughput for Furnace #2, 0.261 pounds of VOC per ton of metal throughput for Furnace #9, or the emission factor determined from the most recent IDEM approved stack test; and
M_v= total metal throughput to the furnaces (tons/month).
Eg VOC = 5.5 lbs/mmcf, Emission factor from AP-42 Chapter 1.4 Table 1.4-2 July 1998 or the most current factor from the applicable section of AP-42.
Ng = Amount of natural gas burned in furnaces.
Ewo VOC=1.0 lbs/10^3gal, Emission factor from AP-42 Chapter 1.11 Table 1.11-1 October 1996 or the most current factor from the applicable section of AP-42.
WO = Amount of waste oil burned in furnaces.

(d) PM, PM_{10}, and $PM_{2.5}$ emissions from the Holding Furnace due to the combustion of natural gas in tons per month = Eg (lbs/mmcf) x Ng (mmcf/month) x (1 ton/2000 pounds).

Where:
Eg PM10 = 7.6lbs/mmcf, Emission factor from AP- 42 Chapter 1.4 Table 1.4-2 July 1998 or the most current factor from the applicable section of AP-42.
Eg PM = 1.9 lbs/mmcf, Emission factor from AP- 42 Chapter 1.4 Table 1.4-2 July 1998 or the most current factor from the applicable section of AP-42.
Ng - Amount of natural gas burned in the furnace.

(e) VOC emissions from Holding Furnace due to the combustion of natural gas in tons per month = 5.5 lbs/mmcf x Ng (mmcf/month) x (1 ton/2000 pounds).

Where:
5.5lbs/mmcf= Emission factor from AP- 42 Chapter 1.4 Table 1.4-2 July 1998 or the most current factor from the applicable section of AP-42.
Ng = Amount of natural gas burned in the furnace.

(f) PM, PM_{10}, and $PM_{2.5}$ emissions from dross cooling in tons per month = [E_c (lbs/ton) x M_c (tons/month)] x (1 ton/2000 pounds).

Where:
E_c = 0.20 pounds PM, PM_{10}, and $PM_{2.5}$ per ton of metal throughput or the emission factor determined from the most recent IDEM approved stack test; and
M_c = total metal throughput to the dross cooling operation (tons/month).

Compliance Monitoring Requirements [326 IAC 2-7-6(1)] [326 IAC 2-7-5(1)]

D.2.6 Parametric Monitoring

The Permittee shall record the pressure drop across the baghouses used in conjunction with the three (3) furnaces and the rotary dross cooler at least once per day when the three (3) furnaces and the rotary dross cooler are in operation. When for any one reading, the pressure drop across the baghouses are outside the normal range of 1.0 and 8.0 inches of water column or a range established during the latest stack test, the Permittee shall take reasonable response steps. Section C - Response to Excursions or Exceedances contains the Permittee's obligation with regard to the reasonable response steps required by this condition. A pressure reading that is outside the above-mentioned range is not a deviation from this permit. Failure to take response steps shall be considered a deviation from this permit.

The instrument used for determining the pressure shall comply with Section C - Instrument Specifications, of this permit, shall be subject to approval by IDEM, OAQ, and shall be calibrated at least once every six (6) months or in accordance with manufacturer’s specifications provided that these specifications are available onsite with the preventive maintenance plan.

Record Keeping Requirements [326 IAC 2-7-5(3)] [326 IAC 2-7-19]

D.2.7 Record Keeping Requirements

(a) To document the compliance status with Condition D.2.5, the Permittee shall record the tons of metal or dross processed each month for the rotary dross cooler and each melting furnace except Holding Furnace #1. The Permittee shall also keep a record of the most recent valid emission factors for each melting furnace.

(b) To document the compliance status with Condition D.2.6 - Parametric Monitoring, the Permittee shall maintain records of the daily pressure drop readings for the baghouses, identified as BHS-6, BHS-7, BHS-9, BHS-10 BHS-11 and BHS 12 used in conjunction with the three (3) furnaces and the rotary dross cooler. The Permittee shall include in its daily record when a pressure drop reading is not taken and the reason for the lack of pressure drop reading.

(c) To document the compliance status with Condition D.2.5, the Permittee shall maintain a log of monthly natural gas or waste oil usage from the reverberatory furnaces.

(d) Section C - General Record Keeping Requirements, contains the Permittee's obligation with regard to the records required by this condition.

SECTION D.3 EMISSIONS UNIT OPERATION CONDITIONS

Emissions Unit Description:

Hot Mill – Cold Mills – Tension Levelers

(o) Hot Rolling Mill (HM-1)
One (1) hot rolling mill, identified as the Hot Mill, installed in 1985 and reconstructed in 2007, with a rated capacity of 34.2 tons of aluminum coil per hour, using an oil mist collection and removal system (HMC-1) for reduction of particulates and VOC, and exhausting to stack S-20.

(p) Cold Mill 2 (CM-2)
One (1) cold rolling mill, identified as Cold Mill 2, installed in 1985 and reconstructed in 2007, with a rated capacity of 22 tons of aluminum coil per hour, using two (2) identical oil mist collection and removal systems (CM-2-FFS-A and B) for control of particulates and VOC, and exhausting to stacks S-30A and S-30B.

(q) Cold Mill 3 (CM-3)
One (1) cold rolling mill, identified as Cold Mill 3, installed in 1985 and reconstructed in 2007, with a rated capacity of 22 tons of aluminum coil per hour, using an oil mist collection and removal system (CM-3-FFS-A) for control of particulates and VOC, and exhausting to stack S-40.

(r) Cold Mill 4 (CM-4)
One (1) cold rolling mill, identified as Cold Mill 4, constructed in 2010, with a rated capacity of 22 tons of aluminum coil per hour, using an oil mist collection and removal system (CM-4-FFS-A) for control of particulates and VOC, and exhausting to stack S-50.

(s) Tension Leveler 1 (TLV-1)
One (1) tension leveler, identified as Tension Leveler 1, installed in 1989, with a rated capacity of 22 tons of aluminum coil per hour, using a low volatile finishing lubricant, with no controls and no stack.

(t) Tension Leveler 2 (TLV-2)
One (1) tension leveler, identified as Tension Leveler 2, installed in 1998, with a rated capacity of 22 tons of aluminum coil per hour, using a low volatile finishing lubricant, with no controls and no stack.

(u) Tension Leveler 3 (TLV-3)
One (1) tension leveler, identified as Tension Leveler 3, installed in 2006, with a rated capacity of 22 tons of aluminum coil per hour, using a low volatile finishing lubricant, with no controls and no stack.

(The information describing the process contained in this emissions unit description box is descriptive information and does not constitute enforceable conditions.)

Emission Limitations and Standards [326 IAC 2-7-5(1)]

D.3.1 Particulate Matter (PM) [326 IAC 6.8]

Pursuant to 326 IAC 6.8-1-2, emissions of particulate matter from the Hot Mill and Cold Mills shall not exceed 0.03 grain per dry standard cubic foot (gr/dscf).

D.3.2 Preventive Maintenance Plan [326 IAC 2-7-5(13)]

A Preventive Maintenance Plan (PMP) is required for this unit and its control device. Section B - Preventive Maintenance Plan contains the Permittee's obligations with regard to the preventive maintenance plan required by this condition.

Compliance Determination Requirements [326 IAC 2-7-6(1)][326 IAC 2-7-5(1)]

D.3.3 Particulate Control

In order to ensure compliance with Condition D.3.1, the oil mist collection and removal systems for particulate control shall be in operation and control emissions at all times that the Hot Rolling Mill and Cold Mills are in operation.

D.3.4 Testing Requirements [326 IAC 2-7-6(1)] [326 IAC 2-1.1-11] [326 IAC 2-2] [326 IAC 2-1.1-5]

(a) In order to demonstrate compliance status with the particulate matter emissions in Condition D.0.1, the Permittee shall perform, PM and PM_{10} stack testing by February 2013 at the exhaust of the oil mist eliminator on the Hot Mill, and Cold Mill 2 or Cold Mill 4 utilizing methods as approved by the Commissioner. This test shall be repeated at least once every five (5) years from the date of this valid compliance demonstration. Testing shall be conducted in accordance with the provisions of 326 IAC 3-6 (Source Sampling Procedures). Section C - Performance Testing contains the Permittee's obligations with regard to the performance testing required by this condition. PM_{10} includes filterable and condensable PM10.

(b) In order to demonstrate compliance status with the particulate matter emissions in Condition D.0.1, the Permittee shall perform, PM and PM_{10} stack testing by February 2014 at the exhaust of the oil mist eliminator on Cold Mill 3 utilizing methods as approved by the Commissioner. This test shall be repeated at least once every five (5) years from the date of this valid compliance demonstration. Testing shall be conducted in accordance with the provisions of 326 IAC 3-6 (Source Sampling Procedures). Section C - Performance Testing contains the Permittee's obligations with regard to the performance testing required by this condition.

(c) In order to demonstrate compliance status with the volatile organic compounds emissions in Condition D.0.3, the Permittee shall perform VOC stack testing by February 2013 at the exhaust of the oil mist eliminator on Hot Mill and Cold Mill 2 utilizing methods as approved by the Commissioner. This test shall be repeated at least once every five (5) years from the date of this valid compliance demonstration. Testing shall be conducted in accordance with the provisions of 326 IAC 3-6 (Source Sampling Procedures). Section C - Performance Testing contains the Permittee's obligations with regard to the performance testing required by this condition.

(d) Within ninety (90) days, after the start up of Cold Mill 4, in order to demonstrate compliance status with the volatile organic compounds and particulate matter emissions in Condition D.0.3, the Permittee shall perform VOC, PM and PM_{10} stack testing at the exhaust of the oil mist eliminator on Cold Mill 4 utilizing methods as approved by the Commissioner. This test shall be performed once. Testing shall be conducted in accordance with the provisions of 326 IAC 3-6 (Source Sampling Procedures). Section C - Performance Testing contains the Permittee's obligations with regard to the performance testing required by this condition.

(e) In order to demonstrate compliance status with the volatile organic compounds emissions in Condition D.0.3, the Permittee shall perform VOC stack testing by February 2014 at the exhaust of the oil mist eliminator on Cold Mill 3 utilizing methods as approved by the Commissioner. This test shall be repeated at least once every five (5) years from the date of this valid compliance demonstration. Testing shall be conducted in accordance with the provisions of 326 IAC 3-6 (Source Sampling Procedures). Section C - Performance Testing contains the Permittee's obligations with regard to the performance testing required by this condition.

(f) In order to demonstrate compliance status with Condition D.0.2, the Permittee shall perform PM2.5 testing at the exhaust of the oil mist eliminator on the Hot Mill and Cold Mill 2 or Cold Mill 4, within 180 days of publication of the new or revised condensable PM2.5 test method(s) referenced in the U. S. EPA's Final Rule for Implementation of the New Source Review (NSR) Program for Particulate Matter Less Than 2.5 Micrometers (PM2.5), signed on May 8th, 2008. This testing shall be conducted at least once every five (5) years utilizing methods as approved by the Commissioner. Testing shall be conducted in accordance with the provisions of 326 IAC 3-6 (Source Sampling Procedures). Section C - Performance Testing contains the Permittee's obligations with regard to the performance testing required by this condition.
PM2.5 includes filterable and condensable PM2.5.

(g) In order to demonstrate compliance status with Condition D.0.2, the Permittee shall perform PM10 and PM2.5 testing at the exhaust of the oil mist eliminator on the Cold Mill 3, within 180 days of publication of the new or revised condensable PM2.5 test method(s) referenced in the U. S. EPA's Final Rule for Implementation of the New Source Review (NSR) Program for Particulate Matter Less Than 2.5 Micrometers (PM2.5), signed on May 8th, 2008. There testing shall be conducted at least once every five (5) years utilizing methods as approved by the Commissioner. Testing shall be conducted in accordance with the provisions of 326 IAC 3-6 (Source Sampling Procedures). Section C - Performance Testing contains the Permittee's obligations with regard to the performance testing required by this condition. PM10 and PM2.5 includes filterable and condensable PM.

D.3.5 PM, PM_{10}, $PM_{2.5}$, and VOC Calculations

Emissions of PM, PM_{10}, $PM_{2.5}$, and VOC in Conditions D.0.1, D.0.2, and D.0.3 shall be determined using the following equations (emission limits are based on the Permittee's Minor Application):

(a) PM, PM_{10}, and $PM_{2.5}$ emissions from the Hot Rolling Mill in tons per month =
E_h (lbs/ton) x M_h (tons/month) x (1 ton/2000 pounds).

Where:
E_h = 0.02 pounds PM, PM_{10}, and $PM_{2.5}$ per ton of metal throughput or the emission factor determined from the most recent IDEM approved stack test; and
M_h = total metal throughput to the Hot Rolling Mill (tons/month).

(b) PM, PM_{10}, and $PM_{2.5}$ emissions from the Cold Mills in tons per month =
E_c (lbs/ton) x M_c (tons/month) x (1 ton/2000 pounds).

Where:
E_c = 0.58 pounds PM, PM_{10}, and $PM_{2.5}$ per ton of metal throughput or the emission factor determined from the most recent IDEM approved stack test; and
M_c = total metal throughput to the Cold Mills (tons/month).

(c) VOC emissions from the Hot Rolling Mill in tons per month =

E_{vh} (lbs/ton) x M_{vh} (tons/month) x (1 ton/2000 pounds).

Where:
E_{vh} = 0.13 pounds VOC per ton of metal throughput or the emission factor determined from the most recent IDEM approved stack test; and
M_{vh} = total metal throughput to the Hot Rolling Mill (tons/month).

(d) VOC emissions from the Cold Mills in tons per month =
E_{vc} (lbs/ton) x M_{vc} (tons/month) x (1 ton/2000 pounds).

Where:
E_{vc} = 0.36 pounds VOC per ton of metal throughput or the emission factor determined from the most recent IDEM approved stack test; and
M_{vc} = total metal throughput to the Cold Mills (tons/month).

(e) VOC emissions from the levelers in tons per month = 0.03 lbs/ton x M_k (tons/month) x (1ton/2000 pounds).

Where:
0.03 = Emission limit in pounds VOC per ton of metal throughput
M_k = total tons of aluminum coils to the levelers (tons/month).

Compliance Monitoring Requirements [326 IAC 2-7-6(1)] [326 IAC 2-7-5(1)]

D.3.6 Visible Emissions Notations

(a) Visible emission notations of the Hot Mill and Cold Mill stack exhausts shall be performed once per day during normal daylight operations when exhausting to the atmosphere. A trained employee shall record whether emissions are normal or abnormal.

(b) For processes operated continuously, "normal" means those conditions prevailing, or expected to prevail, eighty percent (80%) of the time the process is in operation, not counting startup or shut down time.

(c) In the case of batch or discontinuous operations, readings shall be taken during that part of the operation that would normally be expected to cause the greatest emissions.

(d) A trained employee is an employee who has worked at the plant at least one (1) month and has been trained in the appearance and characteristics of normal visible emissions for that specific process.

(e) If abnormal emissions are observed, the Permittee shall take reasonable response steps. Section C - Response to Excursions or Exceedances contains the Permittee's obligation with regard to the reasonable response steps required by this condition. Failure to take response steps shall be considered a deviation from this permit.

D.3.7 Parametric Monitoring

(a) The Permittee shall record the pressure drop across the oil mist collection filters used in conjunction with the Hot Mill and Cold Mills, at least once per day when the mills are in operation. When for any one reading, the pressure drop across a filter is outside the normal range of 1 to 8 inches of water, or a range established during the latest stack test, the Permittee shall take reasonable response steps. Section C - Response to Excursions or Exceedances contains the Permittee's obligation with regard to the reasonable response steps required by this condition. A pressure reading that is outside the above-

mentioned range is not a deviation from this permit. Failure to take response steps shall be considered a deviation from this permit.

(b) The Permittee shall record the outlet coolant temperature for the mills identified as CM-2, CM-3 and CM-4, at least once per day when the mills are in operation. When, for any one reading, the temperature is above 125°F, the Permittee shall take reasonable response steps in accordance with Section C — Response to Excursions or Exceedances. A coolant temperature reading that is outside the above-mentioned range is not a deviation from this permit. Failure to take response steps in accordance with Section C — Response to Excursions or Exceedances shall be considered a deviation from this permit.

(b) The Permittee shall record the outlet coolant temperature for the mills identified as CM-2, CM-3 and CM-4, at least once per day when the mills are in operation. When, for any one reading, the temperature is above 125°F, the Permittee shall take reasonable response steps. Section C - Response to Excursions or Exceedances contains the Permittee's obligation with regard to the reasonable response steps required by this condition. A coolant temperature reading that is outside the above-mentioned range is not a deviation from this permit. Failure to take response steps shall be considered a deviation from this permit.

(c) The Permittee shall record the outlet coolant temperature for the mill identified as HM-1 at least once per day when the mill is in operation. When, for any one reading, the temperature is above 140°F, the Permittee shall take reasonable response steps ~~in~~. Section C - Response to Excursions or Exceedances contains the Permittee's obligation with regard to the reasonable response steps required by this condition. A coolant temperature reading that is outside the above-mentioned range is not a deviation from this permit. Failure to take response steps shall be considered a deviation from this permit.

(e) The Permittee shall maintain daily records of the percentage oil content of the coolant in use at mill HM-1.

The instrument used for determining the pressure shall comply with Section C - Instrument Specifications, of this permit, shall be subject to approval by IDEM, OAQ, and shall be calibrated at least once every six (6) months or in accordance with manufacturer's specifications provided that these specifications are available onsite with the preventive maintenance plan.

Record Keeping Requirements [326 IAC 2-7-5(3)] [326 IAC 2-7-19]

D.3.8 Record Keeping Requirements

(a) Upon issuance of this permit renewal (T089-15690-00201), the Permittee shall comply with the following conditions;

(1) Except as noted in D.3.8(4), to document the compliance status with Condition D.3.5, the Permittee shall record the total tons of aluminum coil processed each month to the Hot Mill (HM) and Cold Mills, identified as HM-1, CM-2, CM-3 and CM-4. The Permittee shall also keep a record of the most recent valid emission factors for these mills.

(2) To document the compliance status with Condition D.3.7(e) - Parametric Monitoring, immediately after issuance of this permit renewal (T089-15690-00201), the Permittee shall maintain daily records required by Condition D.3.7(e).

(3) To document the compliance status with Condition D.3.5, within two hundred and

seventy (270) days after the issuance of this permit, T089-15690-00201, the Permittee shall record the total tons of aluminum coil processed each month to the Hot Mill (HM-1) and each Cold Mills (CM-2, CM-3 and CM-4).
The Permittee shall also keep a record of the most recent valid emission factors for each of these mills.

(4) To document the compliance status with Condition D.3.7(d) - Parametric Monitoring, for the first two hundred and seventy (270) days after the issuance of this permit, T089-15690-00201, the Permittee shall maintain the records required by Condition D.3.7(d).

(b) To document the compliance status with Condition D.3.6 - Visible Emission Notation, the Permittee shall maintain records of the daily visible emission notations of the Hot Mill and Cold Mill stack exhausts. The Permittee shall include in its daily record when a visible emission notation is not taken and the reason for the lack of visible emission notation (e.g. the process did not operate that day).

(c) To document the compliance status with Condition D.3.7(a) - Parametric Monitoring, the Permittee shall maintain records of the daily pressure drop readings for the oil mist collection filters used in conjunction with the Hot Mill and Cold Mills. The Permittee shall include the dates of filter changes and type of filter used. The records shall include in its daily record when a pressure drop reading is not taken and the reason for the lack of pressure drop reading (e.g. the process did not operate that day).

(d) To document the compliance status with Condition D.3.7(b) and (c) - Parametric Monitoring, shall maintain records of the daily outlet coolant temperature readings for the Hot Mill and Cold Mills. The Permittee shall include in its daily record when the outlet coolant temperature is not taken and the reason for the lack of outlet coolant temperature reading (e.g. the process did not operate that day).

(e) To document the compliance status with Condition D.3.5(e), the Permittee shall record the total tons of aluminum coils processed at the tension levelers monthly.

(f) Section C - General Record Keeping Requirements, contains the Permittee's obligation with regard to the records required by this condition.

SECTION D.4 EMISSIONS UNIT OPERATION CONDITIONS

Emissions Unit Description:

(a) Boiler #1 (BS-10.1)
One (1) natural gas-fired boiler, identified as Boiler #1, installed in 2001, with a rated heat input capacity of 4.185 MMBtu/hr, and exhausting to stack S-17.

(b) Boiler #2 (BS-10.2)
One (1) natural gas-fired boiler, identified as Boiler #2, installed in 1999, with a rated heat input capacity of 4.185 MMBtu/hr, and exhausting to stack S-18.

(The information describing the process contained in this emissions unit description box is descriptive information and does not constitute enforceable conditions.)

Emission Limitations and Standards [326 IAC 2-7-5(1)]

D.4.1 Particulate Matter less than ten (10) microns in diameter (PM_{10}) [326 IAC 6.8]

Pursuant to 326 IAC 6.8-2-18(b) (Lake County: PM10 Emission Requirements), these combustion sources shall fire natural gas only.

D.4.2 Preventive Maintenance Plan [326 IAC 2-7-5(13)]

A Preventive Maintenance Plan (PMP) is required for this unit and its control device. Section B - Preventive Maintenance Plan contains the Permittee's obligations with regard to the preventive maintenance plan required by this condition.

Compliance Determination Requirements [326 IAC 2-7-6(1)][326 IAC 2-7-5(1)]

D.4.3 PM, PM_{10}, $PM_{2.5}$, and VOC Calculations

Emissions of PM, PM_{10}, $PM_{2.5}$, and VOC in Conditions D.0.1, D.0.2, and D.0.3 shall be determined using the following equations (emission limits are based on the Permittee's Minor Application):

Emissions of PM, PM_{10}, $PM_{2.5}$, and VOC in Conditions D.0.1, D.0.2, and D.0.3 shall be determined using the following equations (emission limits are based on the Permittee's Minor Application):

(a) PM, PM_{10}, and $PM_{2.5}$ emissions from the Boilers in tons per month =
Eg lbs/mmcf x Ng (mmcf/month)) x (1 ton/2000 pounds).

Where:
Eg PM_{10} = 7.6 lbs/mmcf, Emission factor from AP- 42 Chapter 1.4 Table 1.4-2 July 1998 or the most current factor from the applicable section of AP-42.
Eg PM = 1.9 lbs/mmcf, Emission factor from AP- 42 Chapter 1.4 Table 1.4-2 July 1998 or the most current factor from the applicable section of AP-42.
Ng = Amount of natural gas burned in boilers.

(b) VOC emissions from the Boilers in tons per month =
5.5 lbs/mmcf x Ng (mmcf/month) x (1 ton/2000 pounds).

Where:
5.5 lbs/mmcf = Emission factor from AP- 42 Chapter 1.4 Table 1.4-2 July 1998 or the most current factor from the applicable section of AP-42.
Ng = Amount of natural gas burned in boilers.

SECTION D.5 EMISSIONS UNIT OPERATION CONDITIONS

Emissions Unit Description: Insignificant Activities

(i) Degreasing operations that do not exceed one hundred forty-five (145) gallons per twelve (12) months, except if subject to 326 IAC 20-6 [326 IAC 8-3-2][326 IAC 8-3-5].

(The information describing the process contained in this emissions unit description box is descriptive information and does not constitute enforceable conditions.)

Emission Limitations and Standards [326 IAC 2-7-5(1)]

D.5.1 Organic Solvent Degreasing Operations: Cold Cleaner Operations [326 IAC 8-3-2]

Pursuant to 326 IAC 8-3-2 (Cold Cleaner Operation), for cold cleaning facilities constructed after January 1, 1980, the Permittee shall:

(a) Equip the cleaner with a cover;

(b) Equip the cleaner with a facility for draining cleaned parts;

(c) Close the degreaser cover whenever parts are not being handled in the cleaner;

(d) Drain cleaned parts for at least fifteen (15) seconds or until dripping ceases;

(e) Provide a permanent, conspicuous label summarizing the operation requirements;

(f) Store waste solvent only in covered containers and not dispose of waste solvent or transfer it to another party, in such a manner that greater than twenty percent (20%) of the waste solvent (by weight) can evaporate into the atmosphere.

D.5.2 Organic Solvent Degreasing Operations: Cold Cleaner Operation and Control [326 IAC 8-3-5]

(a) Pursuant to 326 IAC 8-3-5(a) (Cold Cleaner Degreaser Operation and Control), for cold cleaner degreaser operations without remote solvent reservoirs constructed after July 1, 1990, the Permittee shall ensure that the following control equipment requirements are met:

(1) Equip the degreaser with a cover. The cover must be designed so that it can be easily operated with one (1) hand if:

(A) The solvent volatility is greater than two (2) kiloPascals (fifteen (15) millimeters of mercury or three-tenths (0.3) pounds per square inch) measured at thirty-eight degrees Celsius (38°C) (one hundred degrees Fahrenheit (100°F));

(B) The solvent is agitated; or

(C) The solvent is heated

(2) Equip the degreaser with a facility for draining cleaned articles. If the solvent volatility is greater than four and three-tenths (4.3) kiloPascals (thirty-two (32) millimeters of mercury) or six-tenths (0.6) pounds per square inch) measured at thirty-eight degrees Celsius (38°C) (one hundred degrees Fahrenheit (100°F)), then the drainage facility must be internal such that articles are enclosed under

the cover while draining. The drainage facility may be external for applications where an internal type cannot fit into the cleaning system.

(3) Provide a permanent, conspicuous label which lists the operating requirements outlined in subsection (b).

(4) The solvent spray, if used, must be a solid, fluid stream and shall be applied at a pressure which does not cause excessive splashing.

(5) Equip the degreaser with one (1) of the following control devices if the solvent volatility is greater than four and three-tenths (4.3) kiloPascals (thirty-two (32) millimeters of mercury) or six-tenths (0.6) pounds per square inch) measured at thirty-eight degrees Celsius ($38^{O}C$) (one hundred degrees Fahrenheit ($100^{O}F$)), or if the solvent is heated to a temperature greater than forty-eight and nine-tenths degrees Celsius ($48.9^{O}C$) (one hundred twenty degrees Fahrenheit ($120^{O}F$)):

(A) A freeboard that attains a freeboard ratio of seventy-five hundredths (0.75) or greater.

(B) A water cover when solvent is used is insoluble in, and heavier than, water.

(C) Other systems of demonstrated equivalent control such as a refrigerated chiller of carbon adsorption. Such systems shall be submitted to the U.S. EPA as a SIP revision.

(b) Pursuant to 326 IAC 8-3-5(b) (Cold Cleaner Degreaser Operation and Control), the Permittee shall ensure that the following operating requirements are met:

(1) Close the cover whenever articles are not being handled in the degreaser.

(2) Drain cleaned articles for at least fifteen (15) seconds or until dripping ceases.

(3) Store waste solvent only in covered containers and prohibit the disposal or transfer of waste solvent in any manner in which greater than twenty percent (20%) of the waste solvent by weight could evaporate.

SECTION E.1 EMISSIONS UNIT OPERATION CONDITIONS

Emissions Unit Description:

Aluminum Melting Furnaces & Rotary Dross Cooler are Subject to 40 CFR 63, Subpart RRR

(i) Aluminum Reverberatory Furnace #2 (MS-1A)
One (1) aluminum reverberatory furnace, identified as Furnace #2, modified in 2000, with a rated scrap aluminum feed/charge capacity of 18 tons per hour and a heat input capacity of 20 MMBtu/hr using natural gas or waste oil, using baghouses (BHS-9 and BHS-12) as control, and exhausting to stacks S-19 and S-11. Under NESHAP 40 CFR 63, Subpart RRR, Furnace #2 is defined as a Sidewell Group 1 furnace with add-on control.

(j) Aluminum Reverberatory Furnace #6 (MS-1E)
One (1) aluminum reverberatory furnace, identified as Furnace #6, modified in 1998, with a rated scrap aluminum feed/charge capacity of 18 tons per hour and a heat input capacity of 20 MMBtu/hr using natural gas or waste oil, using baghouses (BHS-6 and 7) as control, and exhausting to stacks S-12 and S-11. Under NESHAP 40 CFR 63, Subpart RRR, Furnace #6 is defined as a Sidewell Group 1 furnace with add-on control.

(k) Aluminum Reverberatory Furnace #9 (MS-1H)
One (1) aluminum reverberatory furnace, identified as Furnace #9, approved in 2008 for construction, with a rated scrap aluminum feed/charge capacity of 18 tons per hour and a heat input capacity of 20 MMBtu/hr using natural gas or waste oil, using a baghouse (BHS-11) as control, and exhausting to stack S-23. Under NESHAP 40 CFR 63, Subpart RRR, Furnace #9 is defined as a Sidewell Group 1 furnace with add-on control.

(l) Holding Furnace (HS-2)
One (1) aluminum holding furnace, identified as Holding Furnace #1, installed in 1985 and rebuilt in 2007, receiving and holding molten aluminum prior to casting, with a heat input capacity of 10 MMBtu/hr using natural gas only, and exhausting to stack S-16. Under NESHAP 40 CFR 63, Subpart RRR, Holding Furnace #1 is defined as a Group 2 furnace that holds or processes only clean charge.

(m) Rotary Dross Cooler (DC-1)
One (1) rotary dross cooler, identified as the Rotary Dross Cooler, approved in 2008 for construction, with a rated aluminum dross process capacity of 4.0 tons per hour, using a jet pulse baghouse (BHS-10) as control, and exhausting to stack S-22. Under NESHAP 40 CFR 63, Subpart RRR, Rotary Dross Cooler (DC-1) is defined as a rotary dross cooler with emissions controlled by a fabric filter.

(The information describing the process contained in this emissions unit description box is descriptive information and does not constitute enforceable conditions.)

National Emission Standards for Hazardous Air Pollutants (NESHAP) Requirements
[326 IAC 2-7-5(1)]

E.1.1 General Provisions Relating to NESHAP Subpart RRR (National Emission Standards for Hazardous Air Pollutants for Secondary Aluminum Production) [326 IAC 20-1-1][40 CFR Part 63, Subpart A]

(a) Pursuant to 40 CFR 63.1518, the Permittee shall comply with the provisions of 40 CFR Part 63, Subpart A-General Provisions, which are incorporated by reference as 326 IAC 20-1-1, as apply to the existing emission units described in this section except when otherwise specified in 40 CFR 63, Subpart RRR.

(b) Pursuant to 40 CFR 63.10, the Permittee shall submit all required notifications and reports to:

Indiana Department of Environmental Management
Compliance and Enforcement Branch, Office of Air Quality
100 North Senate Avenue
Indianapolis, Indiana 46204-2251

and

United States Environmental Protection Agency, Region V
Air and Radiation Division, Air Enforcement Branch – Indiana (AE-17J)
77 West Jackson Boulevard
Chicago, Illinois 60604-3590

E.1.2 NESHAP Supart RRR Requirements [40 CFR 63, Subpart RRR]

Pursuant to 40 CFR, Subpart RRR, the Permittee shall comply with applicable provisions of 40 CFR Part 63, Subpart RRR, for existing emission units described in this section beginning March 24, 2003.

40 CFR 63.1500 Applicability.
40 CFR 63.1500(a)
40 CFR 63.1500(b)(4)
40 CFR 63.1500(b)(6)
40 CFR 63.1500(b)(7)
40 CFR 63.1500(b)(8)

40 CFR 63.1501 Dates.
40 CFR 63.1501(a)
40 CFR 63.1501(b)

40 CFR 63.1502 Incorporation by Reference.

40 CFR 63.1503 Definitions.

40 CFR 63.1505 Emission standards for affected sources and emission units.
40 CFR 63.1505(a)
40 CFR 63.1505(g)(1)
40 CFR 63.1505(h)(1)
40 CFR 63.1505(i)(1)
40 CFR 63.1505(i)(3)
40 CFR 63.1505(i)(4)
40 CFR 63.1505(i)(6)
40 CFR 63.1505(i)(7)

40 CFR 63.1506 Operating Requirements

40 CFR 63.1506(a)(1)
40 CFR 63.1506(a)(4)
40 CFR 63.1506(b)(1)
40 CFR 63.1506(b)(2)
40 CFR 63.1506(c)
40 CFR 63.1506(d)
40 CFR 63.1506(i)(1)
40 CFR 63.1506(i)(3)
40 CFR 63.1506(j)(1)
40 CFR 63.1506(m)
40 CFR 63.1506(o)
40 CFR 63.1506(p)

40 CFR 63.1510 Monitoring requirements.

40 CFR 63.1510(a)
40 CFR 63.1510(b)
40 CFR 63.1510(c)
40 CFR 63.1510(d)
40 CFR 63.1510(e)
40 CFR 63.1510(f)(1)
40 CFR 63.1510(h)
40 CFR 63.1510(i)
40 CFR 63.1510(l)
40 CFR 63.1510(n)
40 CFR 63.1510(r)
40 CFR 63.1510(u)
40 CFR 63.1510(w)

40 CFR 63.1511 Performance test/compliance demonstration general requirements.

40 CFR 63.1511(a)
40 CFR 63.1511(b)
40 CFR 63.1511(c)
40 CFR 63.1511(d)
40 CFR 63.1511(e)
40 CFR 63.1511(g)

40 CFR 63.1512 Performance test/compliance demonstration requirements and procedures.

40 CFR 63.1512(d)
40 CFR 63.1512(g)
40 CFR 63.1512(i)
40 CFR 63.1512(k)
40 CFR 63.1512(q)
40 CFR 63.1512(r)
40 CFR 63.1512(s)

40 CFR 63.1513 Equations for determining compliance.

40 CFR 63.1513(b)
40 CFR 63.1513(d)

40 CFR 63.1515 Notifications.

40 CFR 63.1515(a)(2)
40 CFR 63.1515(a)(3)

40 CFR 63.1515(a)(4)
40 CFR 63.1515(a)(5)
40 CFR 63.1515(a)(6)
40 CFR 63.1515(b)(1)
40 CFR 63.1515(b)(3)
40 CFR 63.1515(b)(4)
40 CFR 63.1515(b)(5)
40 CFR 63.1515(b)(6)
40 CFR 63.1515(b)(9)
40 CFR 63.1515(b)(10)

40 CFR 63.1516 Reports.

40 CFR 63.1516(a)
40 CFR 63.1516(b)(1)(i)
40 CFR 63.1516(b)(1)(iv)
40 CFR 63.1516(b)(1)(v)
40 CFR 63.1516(b)(1)(vi)
40 CFR 63.1516(b)(2)(ii)
40 CFR 63.1516(b)(2)(iii)
40 CFR 63.1516(b)(2)(v)
40 CFR 63.1516(b)(3)
40 CFR 63.1516(c)

40 CFR 63.1517 Records

40 CFR 63.1517(a)
40 CFR 63.1517(b)(1)(i)
40 CFR 63.1517(b)(7)
40 CFR 63.1517(b)(9)
40 CFR 63.1517(b)(10)
40 CFR 63.1517(b)(12)
40 CFR 63.1517(b)(13)
40 CFR 63.1517(b)(14)
40 CFR 63.1517(b)(15)
40 CFR 63.1517(b)(16)(i)
40 CFR 63.1517(b)(16)(ii)

40 CFR 63.1518 Applicability of general provisions.

40 CFR 63.1519 Implementation and enforcement.

INDIANA DEPARTMENT OF ENVIRONMENTAL MANAGEMENT
OFFICE OF AIR QUALITY
PART 70 OPERATING PERMIT
CERTIFICATION

Source Name: Jupiter Aluminum Corporation
Source Address: 1745 165th Street, Hammond, Indiana 46320
Part 70 Permit No.: T089-15690-00201

This certification shall be included when submitting monitoring, testing reports/results or other documents as required by this permit.

Please check what document is being certified:

☐ Annual Compliance Certification Letter

☐ Test Result (specify)

☐ Report (specify)

☐ Notification (specify)

☐ Affidavit (specify)

☐ Other (specify)

I certify that, based on information and belief formed after reasonable inquiry, the statements and information in the document are true, accurate, and complete.
Signature:
Printed Name:
Title/Position:
Phone:
Date:

INDIANA DEPARTMENT OF ENVIRONMENTAL MANAGEMENT
OFFICE OF AIR QUALITY
COMPLIANCE AND ENFORCEMENT BRANCH
100 North Senate Avenue
MC 61-53 IGCN 1003
Indianapolis, Indiana 46204-2251
Phone: (317) 233-0178
Fax: (317) 233-6865

PART 70 OPERATING PERMIT
EMERGENCY OCCURRENCE REPORT

Source Name: Jupiter Aluminum Corporation
Source Address: 1745 165th Street, Hammond, Indiana 46320
Part 70 Permit No.: T089-15690-00201

This form consists of 2 pages **Page 1 of 2**

☐ This is an emergency as defined in 326 IAC 2-7-1(12)

- The Permittee must notify the Office of Air Quality (OAQ), within four (**4**) business hours (1-800-451-6027 or 317-233-0178, ask for Compliance Section); and
- The Permittee must submit notice in writing or by facsimile within two (**2**) working days (Facsimile Number: 317-233-6865), and follow the other requirements of 326 IAC 2-7-16.

If any of the following are not applicable, mark N/A

Facility/Equipment/Operation:
Control Equipment:
Permit Condition or Operation Limitation in Permit:
Description of the Emergency:
Describe the cause of the Emergency:

If any of the following are not applicable, mark N/A **Page 2 of 2**

Date/Time Emergency started:
Date/Time Emergency was corrected:
Was the facility being properly operated at the time of the emergency? Y N
Type of Pollutants Emitted: TSP, PM-10, SO_2, VOC, NO_X, CO, Pb, other:
Estimated amount of pollutant(s) emitted during emergency:
Describe the steps taken to mitigate the problem:
Describe the corrective actions/response steps taken:
Describe the measures taken to minimize emissions:
If applicable, describe the reasons why continued operation of the facilities are necessary to prevent imminent injury to persons, severe damage to equipment, substantial loss of capital investment, or loss of product or raw materials of substantial economic value:

Form Completed by:_____

Title / Position: _____

Date:_____

Phone: _____

A certification is not required for this report.

INDIANA DEPARTMENT OF ENVIRONMENTAL MANAGEMENT
OFFICE OF AIR QUALITY
COMPLIANCE AND ENFORCEMENT BRANCH

Part 70 Quarterly Report

Source Name: Jupiter Aluminum Corporation
Source Address: 1745 165th Street, Hammond, Indiana 46320
Part 70 Permit No.: T089-15690-00201
Facility: Entire Source
Parameter: PM
Limit: less than 99.8 tons per twelve (12) consecutive month period

QUARTER : YEAR:

Month	Column 1	Column 2	Column 1 + Column 2
	This Month	Previous 11 Months	12 Month Total
Month 1			
Month 2			
Month 3			

☐ No deviation occurred in this quarter.

☐ Deviation/s occurred in this quarter.
Deviation has been reported on:

Submitted by: _____
Title / Position: _____
Signature: _____
Date: _____
Phone: _____

Attach a signed certification to complete this report.

INDIANA DEPARTMENT OF ENVIRONMENTAL MANAGEMENT
OFFICE OF AIR QUALITY
COMPLIANCE AND ENFORCEMENT BRANCH

Part 70 Quarterly Report

Source Name: Jupiter Aluminum Corporation
Source Address: 1745 165th Street, Hammond, Indiana 46320
Part 70 Permit No.: T089-15690-00201
Facility: Entire Source
Parameter: PM10
Limit: less than 99.01 tons per twelve (12) consecutive month period

QUARTER : YEAR:

Month	Column 1	Column 2	Column 1 + Column 2
	This Month	Previous 11 Months	12 Month Total
Month 1			
Month 2			
Month 3			

☐ No deviation occurred in this quarter.

☐ Deviation/s occurred in this quarter.
Deviation has been reported on:

Submitted by: _____
Title / Position: _____
Signature: _____
Date: _____
Phone: _____

Attach a signed certification to complete this report.

INDIANA DEPARTMENT OF ENVIRONMENTAL MANAGEMENT
OFFICE OF AIR QUALITY
COMPLIANCE AND ENFORCEMENT BRANCH

Part 70 Quarterly Report

Source Name: Jupiter Aluminum Corporation
Source Address: 1745 165th Street, Hammond, Indiana 46320
Part 70 Permit No.: T089-15690-00201
Facility: Entire Source
Parameter: PM2.5
Limit: less than 99.01 tons per twelve (12) consecutive month period

QUARTER : YEAR:

Month	Column 1	Column 2	Column 1 + Column 2
	This Month	Previous 11 Months	12 Month Total
Month 1			
Month 2			
Month 3			

☐ No deviation occurred in this quarter.

☐ Deviation/s occurred in this quarter.
Deviation has been reported on:

Submitted by: _____
Title / Position: _____
Signature: _____
Date: _____
Phone: _____

Attach a signed certification to complete this report.

INDIANA DEPARTMENT OF ENVIRONMENTAL MANAGEMENT
OFFICE OF AIR QUALITY
COMPLIANCE AND ENFORCEMENT BRANCH

Part 70 Quarterly Report

Source Name: Jupiter Aluminum Corporation
Source Address: 1745 165th Street, Hammond, Indiana 46320
Part 70 Permit No.: T089-15690-00201
Facility: Entire Source
Parameter: VOC
Limit: less than 99.22 tons per twelve (12) consecutive month period.

QUARTER : YEAR:

Month	Column 1	Column 2	Column 1 + Column 2
	This Month	Previous 11 Months	12 Month Total
Month 1			
Month 2			
Month 3			

☐ No deviation occurred in this quarter.

☐ Deviation/s occurred in this quarter.
Deviation has been reported on:

Submitted by: _____
Title / Position: _____
Signature: _____
Date: _____
Phone: _____

Attach a signed certification to complete this report.

INDIANA DEPARTMENT OF ENVIRONMENTAL MANAGEMENT
OFFICE OF AIR QUALITY
COMPLIANCE AND ENFORCEMENT BRANCH
PART 70 OPERATING PERMIT
QUARTERLY DEVIATION AND COMPLIANCE MONITORING REPORT

Source Name: Jupiter Aluminum Corporation
Source Address: 1745 165th Street, Hammond, Indiana 46320
Part 70 Permit No.: T089-15690-00201

Months: _____ to _ Year: _____

Page 1 of 2

This report shall be submitted quarterly based on a calendar year. Any deviation from the requirements, the date(s) of each deviation, the probable cause of the deviation, and the response steps taken must be reported. A deviation required to be reported pursuant to an applicable requirement that exists independent of the permit, shall be reported according to the schedule stated in the applicable requirement and does not need to be included in this report. Additional pages may be attached if necessary. If no deviations occurred, please specify in the box marked "No deviations occurred this reporting period".	
☐ NO DEVIATIONS OCCURRED THIS REPORTING PERIOD.	
☐ THE FOLLOWING DEVIATIONS OCCURRED THIS REPORTING PERIOD	
Permit Requirement (specify permit condition #)	
Date of Deviation:	**Duration of Deviation:**
Number of Deviations:	
Probable Cause of Deviation:	
Response Steps Taken:	
Permit Requirement (specify permit condition #)	
Date of Deviation:	**Duration of Deviation:**
Number of Deviations:	
Probable Cause of Deviation:	
Response Steps Taken:	

Permit Requirement (specify permit condition #)	
Date of Deviation:	**Duration of Deviation:**
Number of Deviations:	
Probable Cause of Deviation:	
Response Steps Taken:	
Permit Requirement (specify permit condition #)	
Date of Deviation:	**Duration of Deviation:**
Number of Deviations:	
Probable Cause of Deviation:	
Response Steps Taken:	
Permit Requirement (specify permit condition #)	
Date of Deviation:	**Duration of Deviation:**
Number of Deviations:	
Probable Cause of Deviation:	
Response Steps Taken:	

Form Completed by:_____

Title / Position: _____

Date:_____

Phone: _____

Attach a signed certification to complete this report.

Attachment A
to a Part 70 **Operating Permit** Renewal

40 CFR 63, Subpart RRR—National Emission Standards for Hazardous Air Pollutants: Secondary Aluminum Product.

Source Name:	Jupiter Aluminum Corporation
Source Location:	1745 165th Street, Hammond, Indiana 46320
County:	Lake
SIC Code:	3353
Permit Renewal No.:	T089-15690-00201
Permit Reviewer:	Josiah Balogun

National Emission Standards for Hazardous Air Pollutants: Secondary Aluminum Product 40 CFR 63, Subpart RRR

§ 63.1500 Applicability.

(a) The requirements of this subpart apply to the owner or operator of each secondary aluminum production facility as defined in §63.1503.

(b) The requirements of this subpart apply to the following affected sources, located at a secondary aluminum production facility that is a major source of hazardous air pollutants (HAPs) as defined in §63.2:

(1) Each new and existing aluminum scrap shredder;

(2) Each new and existing thermal chip dryer;

(3) Each new and existing scrap dryer/delacquering kiln/decoating kiln;

(4) Each new and existing group 2 furnace;

(5) Each new and existing sweat furnace;

(6) Each new and existing dross-only furnace;

(7) Each new and existing rotary dross cooler; and

(8) Each new and existing secondary aluminum processing unit.

(c) The requirements of this subpart pertaining to dioxin and furan (D/F) emissions and associated operating, monitoring, reporting and recordkeeping requirements apply to the following affected sources, located at a secondary aluminum production facility that is an area source of HAPs as defined in §63.2:

(1) Each new and existing thermal chip dryer;

(2) Each new and existing scrap dryer/delacquering kiln/decoating kiln;

(3) Each new and existing sweat furnace;

(4) Each new and existing secondary aluminum processing unit, containing one or more group 1 furnace emission units processing other than clean charge.

(d) The requirements of this subpart do not apply to facilities and equipment used for research and development that are not used to produce a saleable product.

(e) If you are an owner or operator of an area source subject to this subpart, you are exempt from the obligation to obtain a permit under 40 CFR part 70 or 71, provided you are not required to obtain a permit under 40 CFR 70.3(a) or 71.3(a) for a reason other than your status as an area source under this subpart. Notwithstanding the previous sentence, you must continue to comply with the provisions of this subpart applicable to area sources.

(f) An aluminum die casting facility, aluminum foundry, or aluminum extrusion facility shall be considered to be an area source if it does not emit, or have the potential to emit considering controls, 10 tons per year or more of any single listed HAP or 25 tons per year of any combination of listed HAP from all emission sources which are located in a contiguous area and under common control, without regard to whether or not such sources are regulated under this subpart or any other subpart. In the case of an aluminum die casting facility, aluminum foundry, or aluminum extrusion facility which is an area source and is subject to regulation under this subpart only because it operates a thermal chip dryer, no furnace operated by such a facility shall be deemed to be subject to the requirements of this subpart if it melts only clean charge, internal scrap, or customer returns.

[65 FR 15710, Mar. 23, 2000, as amended at 67 FR 79814, Dec. 30, 2002; 70 FR 75346, Dec. 19, 2005]

§ 63.1501 Dates.

(a) The owner or operator of an existing affected source must comply with the requirements of this subpart by March 24, 2003.

(b) Except as provided in paragraph (c) of this section, the owner or operator of a new affected source that commences construction or reconstruction after February 11, 1999 must comply with the requirements of this subpart by March 24, 2000 or upon startup, whichever is later.

(c) The owner or operator of any affected source which is constructed or reconstructed at any existing aluminum die casting facility, aluminum foundry, or aluminum extrusion facility which otherwise meets the applicability criteria set forth in §63.1500 must comply with the requirements of this subpart by March 24, 2003 or upon startup, whichever is later.

[67 FR 59791, Sept. 24, 2002]

§ 63.1502 Incorporation by reference.

(a) The following material is incorporated by reference in the corresponding sections noted. The incorporation by reference (IBR) of certain publications listed in the rule will be approved by the Director of the Office of the Federal Register as of the date of publication of the final rule in accordance with 5 U.S.C. 552(a) and 1 CFR part 51. This material is incorporated as it exists on the date of approval:

(1) Chapters 3 and 5 of "Industrial Ventilation: A Manual of Recommended Practice," American Conference of Governmental Industrial Hygienists, (23rd edition, 1998), IBR approved for §63.1506(c), and

(2) "Interim Procedures for Estimating Risks Associated with Exposures to Mixtures of Chlorinated Dibenzo-p-Dioxins and -Dibenzofurans (CDDs and CDFs) and 1989 Update" (EPA/625/3–89/016).

(b) The material incorporated by reference is available for inspection at the National Archives and Records Administration (NARA); and at the Air and Radiation Docket and Information Center, U.S. EPA, 1200 Pennsylvania Ave., NW., Washington, DC. For information on the availability of this material at NARA, call 202–741–6030, or go to: *http://www.archives.gov/federal_register/code_of_federal_regulations/ibr_locations.html.* The material is also available for purchase from the following addresses:

(1) Customer Service Department, American Conference of Governmental Industrial Hygienists (ACGIH), 1330 Kemper Meadow Drive, Cincinnati, OH 45240–1634, telephone number (513) 742–2020; and

(2) The National Technical Information Service (NTIS), 5285 Port Royal Road, Springfield, VA, NTIS no. PB 90–145756.

§ 63.1503 Definitions.

Terms used in this subpart are defined in the Clean Air Act as amended (CAA), in §63.2, or in this section as follows:

Add-on air pollution control device means equipment installed on a process vent that reduces the quantity of a pollutant that is emitted to the air.

Afterburner means an air pollution control device that uses controlled flame combustion to convert combustible materials to noncombustible gases; also known as an incinerator or a thermal oxidizer.

Aluminum scrap means fragments of aluminum stock removed during manufacturing (*i.e.*, machining), manufactured aluminum articles or parts rejected or discarded and useful only as material for reprocessing, and waste and discarded material made of aluminum.

Aluminum scrap shredder means a unit that crushes, grinds, or breaks aluminum scrap into a more uniform size prior to processing or charging to a *scrap dryer/delacquering kiln/decoating kiln,* or furnace. A bale breaker is not an *aluminum scrap shredder.*

Bag leak detection system means an instrument that is capable of monitoring particulate matter loadings in the exhaust of a fabric filter (*i.e.*, baghouse) in order to detect bag failures. A *bag leak detection system* includes, but is not limited to, an instrument that operates on triboelectric, light scattering, light transmittance, or other effect to monitor relative particulate matter loadings.

Chips means small, uniformly-sized, unpainted pieces of aluminum scrap, typically below 11/4inches in any dimension, primarily generated by turning, milling, boring, and machining of aluminum parts.

Clean charge means furnace charge materials, including molten aluminum; T-bar; sow; ingot; billet; pig; alloying elements; aluminum scrap known by the owner or operator to be entirely free of paints, coatings, and lubricants; uncoated/unpainted aluminum chips that have been thermally dried or treated by a centrifugal cleaner; aluminum scrap dried at 343 °C (650 °F) or higher; aluminum scrap delacquered/decoated at 482 °C (900 °F) or higher, and runaround scrap.

Cover flux means salt added to the surface of molten aluminum in a *group 1* or *group 2 furnace,* without agitation of the molten aluminum, for the purpose of preventing oxidation.

Customer returns means any aluminum product which is returned by a customer to the aluminum company that originally manufactured the product prior to resale of the product or further distribution in commerce, and which contains no paint or other solid coatings (*i.e.*, lacquers).

D/F means dioxins and furans.

Dioxins and furans means tetra-, penta-, hexa-, and octachlorinated dibenzo dioxins and furans.

Dross means the slags and skimmings from aluminum melting and refining operations consisting of fluxing agent(s), impurities, and/or oxidized and non-oxidized aluminum, from scrap aluminum charged into the furnace.

Dross-only furnace means a furnace, typically of rotary barrel design, dedicated to the reclamation of aluminum from dross formed during melting, holding, fluxing, or alloying operations carried out in other process units. Dross and salt flux are the sole feedstocks to this type of furnace.

Emission unit means a *group 1 furnace* or *in-line fluxer* at a *secondary aluminum production facility.*

Fabric filter means an add-on air pollution control device used to capture particulate matter by filtering gas streams through filter media; also known as a baghouse.

Feed/charge means, for a furnace or other process unit that operates in batch mode, the total weight of material (including molten aluminum, T-bar, sow, ingot, etc.) and alloying agents that enter the furnace during an operating cycle. For a furnace or other process unit that operates continuously, *feed/charge* means the weight of material (including molten aluminum, T-bar, sow, ingot, etc.) and alloying agents that enter the process unit within a specified time period (*e.g.*, a time period equal to the performance test period). The *feed/charge* for a dross only furnace includes the total weight of dross and solid flux.

Fluxing means refining of molten aluminum to improve product quality, achieve product specifications, or reduce material loss, including the addition of solvents to remove impurities (solvent flux); and the injection of gases such as chlorine, or chlorine mixtures, to remove magnesium (demagging) or hydrogen bubbles (degassing). *Fluxing* may be performed in the furnace or outside the furnace by an *in-line fluxer.*

Furnace hearth means the combustion zone of a furnace in which the molten metal is contained.

Group 1 furnace means a furnace of any design that melts, holds, or processes aluminum that contains paint, lubricants, coatings, or other foreign materials with or without *reactive fluxing,* or processes *clean charge* with *reactive fluxing.*

Group 2 furnace means a furnace of any design that melts, holds, or processes only *clean charge* and that performs no *fluxing* or performs *fluxing* using only nonreactive, non-HAP-containing/non-HAP-generating gases or agents.

HCl means, for the purposes of this subpart, emissions of hydrogen chloride that serve as a surrogate measure of the total emissions of the HAPs hydrogen chloride, hydrogen fluoride and chlorine.

In-line fluxer means a device exterior to a furnace, located in a transfer line from a furnace, used to refine (flux) molten aluminum; also known as a flux box, degassing box, or demagging box.

Internal scrap means all aluminum scrap regardless of the level of contamination which originates from castings or extrusions produced by an aluminum die casting facility, aluminum foundry, or aluminum extrusion facility, and which remains at all times within the control of the company that produced the castings or extrusions.

Lime means calcium oxide or other alkaline reagent.

Lime-injection means the continuous addition of lime upstream of a *fabric filter.*

Melting/holding furnace means a *group 1 furnace* that processes only *clean charge,* performs melting, holding, and fluxing functions, and does not transfer molten aluminum to or from

another furnace except for purposes of alloy changes, off-specification product drains, or maintenance activities.

Operating cycle means for a batch process, the period beginning when the feed material is first charged to the operation and ending when all feed material charged to the operation has been processed. For a batch melting or holding furnace process, *operating cycle* means the period including the charging and melting of scrap aluminum and the fluxing, refining, alloying, and tapping of molten aluminum (the period from tap-to-tap).

PM means, for the purposes of this subpart, emissions of particulate matter that serve as a measure of total particulate emissions and as a surrogate for metal HAPs contained in the particulates, including but not limited to, antimony, arsenic, beryllium, cadmium, chromium, cobalt, lead, manganese, mercury, nickel, and selenium.

Pollution prevention means source reduction as defined under the Pollution Prevention Act of 1990 (*e.g.*, equipment or technology modifications, process or procedure modifications, reformulation or redesign of products, substitution of raw materials, and improvements in housekeeping, maintenance, training, or inventory control), and other practices that reduce or eliminate the creation of pollutants through increased efficiency in the use of raw materials, energy, water, or other resources, or protection of natural resources by conservation.

Reactive fluxing means the use of any gas, liquid, or solid flux (other than cover flux) that results in a HAP emission. Argon and nitrogen are not reactive and do not produce HAP.

Reconstruction means the replacement of components of an affected source or *emission unit* such that the fixed capital cost of the new components exceeds 50 percent of the fixed capital cost that would be required to construct a comparable new affected source, and it is technologically and economically feasible for the reconstructed source to meet relevant standard(s) established in this subpart. Replacement of the refractory in a furnace is routine maintenance and is not a *reconstruction.* The repair and replacement of *in-line fluxer* components (*e.g.*, rotors/shafts, burner tubes, refractory, warped steel) is considered to be routine maintenance and is not considered a *reconstruction. In-line fluxers* are typically removed to a maintenance/repair area and are replaced with repaired units. The replacement of an existing *in-line fluxer* with a repaired unit is not considered a *reconstruction.*

Residence time means, for an *afterburner*, the duration of time required for gases to pass through the *afterburner* combustion zone. *Residence time* is calculated by dividing the *afterburner* combustion zone volume in cubic feet by the volumetric flow rate of the gas stream in actual cubic feet per second.

Rotary dross cooler means a water-cooled rotary barrel device that accelerates cooling of dross.

Runaround scrap means scrap materials generated on-site by aluminum casting, extruding, rolling, scalping, forging, forming/stamping, cutting, and trimming operations and that do not contain paint or solid coatings. Uncoated/unpainted aluminum chips generated by turning,

boring, milling, and similar machining operations may be clean charge if they have been thermally dried or treated by a centrifugal cleaner, but are not considered to be *runaround scrap.*

Scrap dryer/delacquering kiln/decoating kiln means a unit used primarily to remove various organic contaminants such as oil, paint, lacquer, ink, plastic, and/or rubber from *aluminum scrap* (including used beverage containers) prior to melting.

Secondary aluminum processing unit (SAPU). An existing SAPU means all existing *group 1 furnaces* and all existing *in-line fluxers* within a *secondary aluminum production facility.* Each existing *group 1 furnace* or existing *in-line fluxer* is considered an *emission unit* within a *secondary aluminum processing unit.* A new *SAPU* means any combination of individual *group 1 furnaces* and *in-line fluxers* within a *secondary aluminum processing facility* which either were constructed or reconstructed after February 11, 1999, or have been permanently redesignated as new emission units pursuant to §63.1505(k)(6). Each of the *group 1 furnaces* or *in-line fluxers* within a new *SAPU* is considered an *emission unit* within that *secondary aluminum processing unit.*

Secondary aluminum production facility means any establishment using *clean charge, aluminum scrap,* or dross from aluminum production, as the raw material and performing one or more of the following processes: scrap shredding, scrap drying/delacquering/decoating, thermal chip drying, furnace operations (*i.e.*, melting, holding, sweating, refining, fluxing, or alloying), recovery of aluminum from dross, in-line fluxing, or dross cooling. A *secondary aluminum production facility* may be independent or part of a primary aluminum production facility. For purposes of this subpart, aluminum die casting facilities, aluminum foundries, and aluminum extrusion facilities are not considered to be secondary aluminum production facilities if the only materials they melt are *clean charge,* customer returns, or internal scrap, and if they do not operate sweat furnaces, thermal chip dryers, or scrap dryers/delacquering kilns/decoating kilns. The determination of whether a facility is a *secondary aluminum production facility* is only for purposes of this subpart and any regulatory requirements which are derived from the applicability of this subpart, and is separate from any determination which may be made under other environmental laws and regulations, including whether the same facility is a "secondary metal production facility" as that term is used in 42 U.S.C. §7479(1) and 40 CFR 52.21(b)(1)(i)(A) ("prevention of significant deterioration of air quality").

Sidewell means an open well adjacent to the hearth of a furnace with connecting arches between the hearth and the open well through which molten aluminum is circulated between the hearth, where heat is applied by burners, and the open well, which is used for charging scrap and solid flux or salt to the furnace, injecting fluxing agents, and skimming dross.

Sweat furnace means a furnace used exclusively to reclaim aluminum from scrap that contains substantial quantities of iron by using heat to separate the low-melting point aluminum from the scrap while the higher melting-point iron remains in solid form.

TEQ means the international method of expressing toxicity equivalents for dioxins and furans as defined in "Interim Procedures for Estimating Risks Associated with Exposures to Mixtures of Chlorinated Dibenzo-p-Dioxins and -Dibenzofurans (CDDs and CDFs) and 1989 Update"

(EPA–625/3–89–016), available from the National Technical Information Service (NTIS), 5285 Port Royal Road, Springfield, Virginia 22161, NTIS no. PB 90–145756.

THC means, for the purposes of this subpart, total hydrocarbon emissions that also serve as a surrogate for the emissions of organic HAP compounds.

Thermal chip dryer means a device that uses heat to evaporate oil or oil/water mixtures from unpainted/uncoated aluminum chips. Pre-heating boxes or other dryers which are used solely to remove water from aluminum scrap are not considered to be thermal chip dryers for purposes of this subpart.

Three-day, 24-hour rolling average means daily calculations of the average 24-hour emission rate (lbs/ton of feed/charge), over the 3 most recent consecutive 24-hour periods, for a *secondary aluminum processing unit.*

Total reactive chlorine flux injection rate means the sum of the total weight of chlorine in the gaseous or liquid reactive flux and the total weight of chlorine in the solid reactive chloride flux, divided by the total weight of feed/charge, as determined by the procedure in §63.1512(o).

[65 FR 15710, Mar. 23, 2000, as amended at 67 FR 79814, Dec. 30, 2002; 69 FR 18803, Apr. 9, 2004; 69 FR 53984, Sept. 3, 2004; 70 FR 57517, Oct. 3, 2005]

§ 63.1504 [Reserved]

Emission Standards and Operating Requirements

§ 63.1505 Emission standards for affected sources and emission units.

(a) *Summary.* The owner or operator of a new or existing affected source must comply with each applicable limit in this section. Table 1 to this subpart summarizes the emission standards for each type of source.

(b) *Aluminum scrap shredder.* On and after the compliance date established by §63.1501, the owner or operator of an aluminum scrap shredder at a secondary aluminum production facility that is a major source must not discharge or cause to be discharged to the atmosphere:

(1) Emissions in excess of 0.023 grams (g) of PM per dry standard cubic meter (dscm) (0.010 grain (gr) of PM per dry standard cubic foot (dscf)); and

(2) Visible emissions (VE) in excess of 10 percent opacity from any PM add-on air pollution control device if a continuous opacity monitor (COM) or visible emissions monitoring is chosen as the monitoring option.

(c) *Thermal chip dryer.* On and after the compliance date established by §63.1501, the owner or operator of a thermal chip dryer must not discharge or cause to be discharged to the atmosphere emissions in excess of:

(1) 0.40 kilogram (kg) of THC, as propane, per megagram (Mg) (0.80 lb of THC, as propane, per ton) of feed/charge from a thermal chip dryer at a secondary aluminum production facility that is a major source; and

(2) 2.50 micrograms (µg) of D/F TEQ per Mg (3.5×10^{-5}gr per ton) of feed/charge from a thermal chip dryer at a secondary aluminum production facility that is a major or area source.

(d) *Scrap dryer/delacquering kiln/decoating kiln.* On and after the compliance date established by §63.1501:

(1) The owner or operator of a scrap dryer/delacquering kiln/decoating kiln must not discharge or cause to be discharged to the atmosphere emissions in excess of:

(i) 0.03 kg of THC, as propane, per Mg (0.06 lb of THC, as propane, per ton) of feed/charge from a scrap dryer/delacquering kiln/decoating kiln at a secondary aluminum production facility that is a major source;

(ii) 0.04 kg of PM per Mg (0.08 lb per ton) of feed/charge from a scrap dryer/delacquering kiln/decoating kiln at a secondary aluminum production facility that is a major source;

(iii) 0.25 µg of D/F TEQ per Mg (3.5×10^{-6}gr of D/F TEQ per ton) of feed/charge from a scrap dryer/delacquering kiln/decoating kiln at a secondary aluminum production facility that is a major or area source; and

(iv) 0.40 kg of HCl per Mg (0.80 lb per ton) of feed/charge from a scrap dryer/delacquering kiln/decoating kiln at a secondary aluminum production facility that is a major source.

(2) The owner or operator of a scrap dryer/delacquering kiln/decoating kiln at a secondary aluminum production facility that is a major source must not discharge or cause to be discharged to the atmosphere visible emissions in excess of 10 percent opacity from any PM add-on air pollution control device if a COM is chosen as the monitoring option.

(e) *Scrap dryer/delacquering kiln/decoating kiln: alternative limits.* The owner or operator of a scrap dryer/ delacquering kiln/decoating kiln may choose to comply with the emission limits in this paragraph (e) as an alternative to the limits in paragraph (d) of this section if the scrap dryer/delacquering kiln/decoating kiln is equipped with an afterburner having a design residence time of at least 1 second and the afterburner is operated at a temperature of at least 760 °C (1400 °F) at all times. On and after the compliance date established by §63.1501:

(1) The owner or operator of a scrap dryer/delacquering kiln/decoating kiln must not discharge or cause to be discharged to the atmosphere emissions in excess of:

(i) 0.10 kg of THC, as propane, per Mg (0.20 lb of THC, as propane, per ton) of feed/charge from a scrap dryer/delacquering kiln/decoating kiln at a secondary aluminum production facility that is a major source;

(ii) 0.15 kg of PM per Mg (0.30 lb per ton) of feed/charge from a scrap dryer/delacquering kiln/decoating kiln at a secondary aluminum production facility that is a major source;

(iii) 5.0 µg of D/F TEQ per Mg (7.0×10^{-5}gr of D/F TEQ per ton) of feed/charge from a scrap dryer/delacquering kiln/decoating kiln at a secondary aluminum production facility that is a major or area source; and

(iv) 0.75 kg of HCl per Mg (1.50 lb per ton) of feed/charge from a scrap dryer/delacquering kiln/decoating kiln at a secondary aluminum production facility that is a major source.

(2) The owner or operator of a scrap dryer/ delacquering kiln/decoating kiln at a secondary aluminum production facility that is a major source must not discharge or cause to be discharged to the atmosphere visible emissions in excess of 10 percent opacity from any PM add-on air pollution control device if a COM is chosen as the monitoring option.

(f) *Sweat furnace.* The owner or operator of a sweat furnace shall comply with the emission standard of paragraph (f)(2) of this section.

(1) The owner or operator is not required to conduct a performance test to demonstrate compliance with the emission standard of paragraph (f)(2) of this section, provided that, on and after the compliance date of this rule, the owner or operator operates and maintains an afterburner with a design residence time of 0.8 seconds or greater and an operating temperature of 1600 °F or greater.

(2) On and after the compliance date established by §63.1501, the owner or operator of a sweat furnace at a secondary aluminum production facility that is a major or area source must not discharge or cause to be discharged to the atmosphere emissions in excess of 0.80 nanogram (ng) of D/F TEQ per dscm (3.5×10^{-10}gr per dscf) at 11 percent oxygen (O^2).

(g) *Dross-only furnace.* On and after the compliance date established by §63.1501, the owner or operator of a dross-only furnace at a secondary aluminum production facility that is a major source must not discharge or cause to be discharged to the atmosphere:

(1) Emissions in excess of 0.15 kg of PM per Mg (0.30 lb of PM per ton) of feed/charge.

(2) Visible emissions in excess of 10 percent opacity from any PM add-on air pollution control device if a COM is chosen as the monitoring option.

(h) *Rotary dross cooler.* On and after the compliance date established by §63.1501, the owner or operator of a rotary dross cooler at a secondary aluminum production facility that is a major source must not discharge or cause to be discharged to the atmosphere:

(1) Emissions in excess of 0.09 g of PM per dscm (0.04 gr per dscf).

(2) Visible emissions in excess of 10 percent opacity from any PM add-on air pollution control device if a COM is chosen as the monitoring option.

(i) *Group 1 furnace.* The owner or operator of a group 1 furnace must use the limits in this paragraph to determine the emission standards for a SAPU.

(1) 0.20 kg of PM per Mg (0.40 lb of PM per ton) of feed/charge from a group 1 furnace, that is not a melting/holding furnace processing only clean charge, at a secondary aluminum production facility that is a major source;

(2) 0.40 kg of PM per Mg (0.80 lb of PM per ton) of feed/charge from a group 1 melting/holding furnace processing only clean charge at a secondary aluminum production facility that is a major source;

(3) 15 µg of D/F TEQ per Mg (2.1×10^{-4}gr of D/F TEQ per ton) of feed/charge from a group 1 furnace at a secondary aluminum production facility that is a major or area source. This limit does not apply if the furnace processes only clean charge; and

(4) 0.20 kg of HCl per Mg (0.40 lb of HCl per ton) of feed/charge or, if the furnace is equipped with an add-on air pollution control device, 10 percent of the uncontrolled HCl emissions, by weight, for a group 1 furnace at a secondary aluminum production facility that is a major source.

(5) The owner or operator of a group 1 furnace at a secondary aluminum production facility that is a major source must not discharge or cause to be discharged to the atmosphere visible emissions in excess of 10 percent opacity from any PM add-on air pollution control device if a COM is chosen as the monitoring option.

(6) The owner or operator may determine the emission standards for a SAPU by applying the group 1 furnace limits on the basis of the aluminum production weight in each group 1 furnace, rather than on the basis of feed/charge.

(7) The owner or operator of a sidewell group 1 furnace that conducts reactive fluxing (except for cover flux) in the hearth, or that conducts reactive fluxing in the sidewell at times when the level of molten metal falls below the top of the passage between the sidewell and the hearth, must comply with the emission limits of paragraphs (i)(1) through (4) of this section on the basis of the combined emissions from the sidewell and the hearth.

(j) *In-line fluxer.* Except as provided in paragraph (j)(3) of this section for an in-line fluxer using no reactive flux material, the owner or operator of an in-line fluxer must use the limits in this paragraph to determine the emission standards for a SAPU.

(1) 0.02 kg of HCl per Mg (0.04 lb of HCl per ton) of feed/charge;

(2) 0.005 kg of PM per Mg (0.01 lb of PM per ton) of feed/charge.

(3) The emission limits in paragraphs (j)(1) and (j)(2) of this section do not apply to an in-line fluxer that uses no reactive flux materials.

(4) The owner or operator of an in-line fluxer at a secondary aluminum production facility that is a major source must not discharge or cause to be discharged to the atmosphere visible emissions in excess of 10 percent opacity from any PM add-on air pollution control device used to control emissions from the in-line fluxer, if a COM is chosen as the monitoring option.

(5) The owner or operator may determine the emission standards for a SAPU by applying the in-line fluxer limits on the basis of the aluminum production weight in each in-line fluxer, rather than on the basis of feed/charge.

(k) *Secondary aluminum processing unit.* On and after the compliance date established by §63.1501, the owner or operator must comply with the emission limits calculated using the equations for PM and HCl in paragraphs (k)(1) and (2) of this section for each secondary aluminum processing unit at a secondary aluminum production facility that is a major source. The owner or operator must comply with the emission limit calculated using the equation for D/F in paragraph (k)(3) of this section for each secondary aluminum processing unit at a secondary aluminum production facility that is a major or area source.

(1) The owner or operator must not discharge or allow to be discharged to the atmosphere any 3-day, 24-hour rolling average emissions of PM in excess of:

$$L_{c_{PM}} = \frac{\sum_{i=1}^{n}\left(L_{ti_{PM}} \times T_{ti}\right)}{\sum_{i=1}^{n}\left(T_{ti}\right)} \qquad (Eq.\ 1)$$

Where,

L_{tiPM}= The PM emission limit for individual emission unit i in paragraph (i)(1) and (2) of this section for a group 1 furnace or in paragraph (j)(2) of this section for an in-line fluxer;

T_{ti}= The feed/charge rate for individual emission unit I; and

L_{cPM}= The PM emission limit for the secondary aluminum processing unit.

Note: In-line fluxers using no reactive flux materials cannot be included in this calculation since they are not subject to the PM limit.

(2) The owner or operator must not discharge or allow to be discharged to the atmosphere any 3-day, 24-hour rolling average emissions of HCl in excess of:

$$L_{c_{HCl}} = \frac{\sum_{i=1}^{n}\left(L_{ti_{HCl}} \times T_{ti}\right)}{\sum_{i=1}^{n}\left(T_{ti}\right)} \qquad (Eq.\ 2)$$

Where,

L_{tiHCl}= The HCl emission limit for individual emission unit i in paragraph (i)(4) of this section for a group 1 furnace or in paragraph (j)(1) of this section for an in-line fluxer; and

L_{cHCl}= The HCl emission limit for the secondary aluminum processing unit.

Note: In-line fluxers using no reactive flux materials cannot be included in this calculation since they are not subject to the HCl limit.

(3) The owner or operator must not discharge or allow to be discharged to the atmosphere any 3-day, 24-hour rolling average emissions of D/F in excess of:

$$L_{C_{D/F}} = \frac{\sum_{i=1}^{n}\left(L_{ti_{D/F}} \times T_{ti}\right)}{\sum_{i=1}^{n}\left(T_{ti}\right)} \qquad (Eq.\ 3)$$

Where,

$L_{tiD/F}$= The D/F emission limit for individual emission unit i in paragraph (i)(3) of this section for a group 1 furnace; and

$L_{cD/F}$= The D/F emission limit for the secondary aluminum processing unit.

Note: Clean charge furnaces cannot be included in this calculation since they are not subject to the D/F limit.

(4) The owner or operator of a SAPU at a secondary aluminum production facility that is a major source may demonstrate compliance with the emission limits of paragraphs (k)(1) through (3) of this section by demonstrating that each emission unit within the SAPU is in compliance with the applicable emission limits of paragraphs (i) and (j) of this section.

(5) The owner or operator of a SAPU at a secondary aluminum production facility that is an area source may demonstrate compliance with the emission limits of paragraph (k)(3) of this section by demonstrating that each emission unit within the SAPU is in compliance with the emission limit of paragraph (i)(3) of this section.

(6) With the prior approval of the responsible permitting authority, an owner or operator may redesignate any existing group 1 furnace or in-line fluxer at a secondary aluminum production facility as a new emission unit. Any emission unit so redesignated may thereafter be included in a new SAPU at that facility. Any such redesignation will be solely for the purpose of this MACT standard and will be irreversible.

[65 FR 15710, Mar. 23, 2000, as amended at 67 FR 59792, Sept. 24, 2002; 67 FR 79816, Dec. 30, 2002; 70 FR 57517, Oct. 3, 2005]

§ 63.1506 Operating requirements.

(a) *Summary.* (1) On and after the compliance date established by §63.1501, the owner or operator must operate all new and existing affected sources and control equipment according to the requirements in this section.

(2) The owner or operator of an existing sweat furnace that meets the specifications of §63.1505(f)(1) must operate the sweat furnace and control equipment according to the requirements of this section on and after the compliance date of this standard.

(3) The owner or operator of a new sweat furnace that meets the specifications of §63.1505(f)(1) must operate the sweat furnace and control equipment according to the requirements of this section by March 23, 2000 or upon startup, whichever is later.

(4) Operating requirements are summarized in Table 2 to this subpart.

(b) *Labeling.* The owner or operator must provide and maintain easily visible labels posted at each group 1 furnace, group 2 furnace, in-line fluxer and scrap dryer/delacquering kiln/decoating kiln that identifies the applicable emission limits and means of compliance, including:

(1) The type of affected source or emission unit (*e.g.*, scrap dryer/delacquering kiln/decoating kiln, group 1 furnace, group 2 furnace, in-line fluxer).

(2) The applicable operational standard(s) and control method(s) (work practice or control device). This includes, but is not limited to, the type of charge to be used for a furnace (*e.g* ., clean scrap only, all scrap, etc.), flux materials and addition practices, and the applicable operating parameter ranges and requirements as incorporated in the OM&M plan.

(3) The afterburner operating temperature and design residence time for a scrap dryer/delacquering kiln/decoating kiln.

(c) *Capture/collection systems.* For each affected source or emission unit equipped with an add-on air pollution control device, the owner or operator must:

(1) Design and install a system for the capture and collection of emissions to meet the engineering standards for minimum exhaust rates as published by the American Conference of Governmental Industrial Hygienists in chapters 3 and 5 of “Industrial Ventilation: A Manual of Recommended Practice” (incorporated by reference in §63.1502 of this subpart);

(2) Vent captured emissions through a closed system, except that dilution air may be added to emission streams for the purpose of controlling temperature at the inlet to a fabric filter; and

(3) Operate each capture/collection system according to the procedures and requirements in the OM&M plan.

(d) *Feed/charge weight.* The owner or operator of each affected source or emission unit subject to an emission limit in kg/Mg (lb/ton) or µg/Mg (gr/ton) of feed/charge must:

(1) Except as provided in paragraph (d)(3) of this section, install and operate a device that measures and records or otherwise determine the weight of feed/charge (or throughput) for each operating cycle or time period used in the performance test; and

(2) Operate each weight measurement system or other weight determination procedure in accordance with the OM&M plan.

(3) The owner or operator may chose to measure and record aluminum production weight from an affected source or emission unit rather than feed/charge weight to an affected source or emission unit, provided that:

(i) The aluminum production weight, rather than feed/charge weight is measured and recorded for all emission units within a SAPU; and

(ii) All calculations to demonstrate compliance with the emission limits for SAPUs are based on aluminum production weight rather than feed/charge weight.

(e) *Aluminum scrap shredder.* The owner or operator of a scrap shredder with emissions controlled by a fabric filter must operate a bag leak detection system, or a continuous opacity monitor, or conduct visible emissions observations.

(1) If a bag leak detection system is used to meet the monitoring requirements in §63.1510, the owner or operator must:

(i) Initiate corrective action within 1-hour of a bag leak detection system alarm and complete the corrective action procedures in accordance with the OM&M plan.

(ii) Operate each fabric filter system such that the bag leak detection system alarm does not sound more than 5 percent of the operating time during a 6-month block reporting period. In calculating this operating time fraction, if inspection of the fabric filter demonstrates that no corrective action is required, no alarm time is counted. If corrective action is required, each alarm shall be counted as a minimum of 1 hour. If the owner or operator takes longer than 1 hour to initiate corrective action, the alarm time shall be counted as the actual amount of time taken by the owner or operator to initiate corrective action.

(2) If a continuous opacity monitoring system is used to meet the monitoring requirements in §63.1510, the owner or operator must initiate corrective action within 1-hour of any 6-minute average reading of 5 percent or more opacity and complete the corrective action procedures in accordance with the OM&M plan.

(3) If visible emission observations are used to meet the monitoring requirements in §63.1510, the owner or operator must initiate corrective action within 1-hour of any observation of visible emissions during a daily visible emissions test and complete the corrective action procedures in accordance with the OM&M plan.

(f) *Thermal chip dryer*. The owner or operator of a thermal chip dryer with emissions controlled by an afterburner must:

(1) Maintain the 3-hour block average operating temperature of each afterburner at or above the average temperature established during the performance test.

(2) Operate each afterburner in accordance with the OM&M plan.

(3) Operate each thermal chip dryer using only unpainted aluminum chips as the feedstock.

(g) *Scrap dryer/delacquering kiln/decoating kiln.* The owner or operator of a scrap dryer/delacquering kiln/decoating kiln with emissions controlled by an afterburner and a lime-injected fabric filter must:

(1) For each afterburner,

(i) Maintain the 3-hour block average operating temperature of each afterburner at or above the average temperature established during the performance test.

(ii) Operate each afterburner in accordance with the OM&M plan.

(2) If a bag leak detection system is used to meet the fabric filter monitoring requirements in §63.1510,

(i) Initiate corrective action within 1-hour of a bag leak detection system alarm and complete any necessary corrective action procedures in accordance with the OM&M plan.

(ii) Operate each fabric filter system such that the bag leak detection system alarm does not sound more than 5 percent of the operating time during a 6-month block reporting period. In calculating this operating time fraction, if inspection of the fabric filter demonstrates that no corrective action is required, no alarm time is counted. If corrective action is required, each alarm shall be counted as a minimum of 1 hour. If the owner or operator takes longer than 1 hour to initiate corrective action, the alarm time shall be counted as the actual amount of time taken by the owner or operator to initiate corrective action.

(3) If a continuous opacity monitoring system is used to meet the monitoring requirements in §63.1510, initiate corrective action within 1-hour of any 6-minute average reading of 5 percent or more opacity and complete the corrective action procedures in accordance with the OM&M plan.

(4) Maintain the 3-hour block average inlet temperature for each fabric filter at or below the average temperature established during the performance test, plus 14 °C (plus 25 °F).

(5) For a continuous injection device, maintain free-flowing lime in the hopper to the feed device at all times and maintain the lime feeder setting at the same level established during the performance test.

(h) *Sweat furnace.* The owner or operator of a sweat furnace with emissions controlled by an afterburner must:

(1) Maintain the 3-hour block average operating temperature of each afterburner at or above:

(i) The average temperature established during the performance test; or

(ii) 1600 °F if a performance test was not conducted, and the afterburner meets the specifications of §63.1505(f)(1).

(2) Operate each afterburner in accordance with the OM&M plan.

(i) *Dross-only furnace.* The owner or operator of a dross-only furnace with emissions controlled by a fabric filter must:

(1) If a bag leak detection system is used to meet the monitoring requirements in §63.1510,

(i) Initiate corrective action within 1-hour of a bag leak detection system alarm and complete the corrective action procedures in accordance with the OM&M plan.

(ii) Operate each fabric filter system such that the bag leak detection system alarm does not sound more than 5 percent of the operating time during a 6-month block reporting period. In calculating this operating time fraction, if inspection of the fabric filter demonstrates that no corrective action is required, no alarm time is counted. If corrective action is required, each alarm shall be counted as a minimum of 1 hour. If the owner or operator takes longer than 1 hour to initiate corrective action, the alarm time shall be counted as the actual amount of time taken by the owner or operator to initiate corrective action.

(2) If a continuous opacity monitoring system is used to meet the monitoring requirements in §63.1510, initiate corrective action within 1-hour of any 6-minute average reading of 5 percent or more opacity and complete the corrective action procedures in accordance with the OM&M plan.

(3) Operate each furnace using dross and salt flux as the sole feedstock.

(j) *Rotary dross cooler.* The owner or operator of a rotary dross cooler with emissions controlled by a fabric filter must:

(1) If a bag leak detection system is used to meet the monitoring requirements in §63.1510,

(i) Initiate corrective action within 1-hour of a bag leak detection system alarm and complete the corrective action procedures in accordance with the OM&M plan.

(ii) Operate each fabric filter system such that the bag leak detection system alarm does not sound more than 5 percent of the operating time during a 6-month block reporting period. In calculating this operating time fraction, if inspection of the fabric filter demonstrates that no corrective action is required, no alarm time is counted. If corrective action is required, each alarm shall be counted as a minimum of 1 hour. If the owner or operator takes longer than 1 hour to initiate corrective action, the alarm time shall be counted as the actual amount of time taken by the owner or operator to initiate corrective action.

(2) If a continuous opacity monitoring system is used to meet the monitoring requirements in §63.1510, initiate corrective action within 1 hour of any 6-minute average reading of 5 percent or more opacity and complete the corrective action procedures in accordance with the OM&M plan.

(k) *In-line fluxer.* The owner or operator of an in-line fluxer with emissions controlled by a lime-injected fabric filter must:

(1) If a bag leak detection system is used to meet the monitoring requirements in §63.1510,

(i) Initiate corrective action within 1-hour of a bag leak detection system alarm and complete the corrective action procedures in accordance with the OM&M plan.

(ii) Operate each fabric filter system such that the bag leak detection system alarm does not sound more than 5 percent of the operating time during a 6-month block reporting period. In calculating this operating time fraction, if inspection of the fabric filter demonstrates that no corrective action is required, no alarm time is counted. If corrective action is required, each alarm shall be counted as a minimum of 1 hour. If the owner or operator takes longer than 1 hour to initiate corrective action, the alarm time shall be counted as the actual amount of time taken by the owner or operator to initiate corrective action.

(2) If a continuous opacity monitoring system is used to meet the monitoring requirements in §63.1510, initiate corrective action within 1 hour of any 6-minute average reading of 5 percent or more opacity and complete the corrective action procedures in accordance with the OM&M plan.

(3) For a continuous injection system, maintain free-flowing lime in the hopper to the feed device at all times and maintain the lime feeder setting at the same level established during the performance test.

(4) Maintain the total reactive chlorine flux injection rate for each operating cycle or time period used in the performance test at or below the average rate established during the performance test.

(l) *In-line fluxer using no reactive flux material.* The owner or operator of a new or existing in-line fluxer using no reactive flux materials must operate each in-line fluxer using no reactive flux materials.

(m) *Group 1 furnace with add-on air pollution control devices.* The owner or operator of a group 1 furnace with emissions controlled by a lime-injected fabric filter must:

(1) If a bag leak detection system is used to meet the monitoring requirements in §63.1510, the owner or operator must:

(i) Initiate corrective action within 1 hour of a bag leak detection system alarm.

(ii) Complete the corrective action procedures in accordance with the OM&M plan.

(iii) Operate each fabric filter system such that the bag leak detection system alarm does not sound more than 5 percent of the operating time during a 6-month block reporting period. In calculating this operating time fraction, if inspection of the fabric filter demonstrates that no corrective action is required, no alarm time is counted. If corrective action is required, each alarm shall be counted as a minimum of 1 hour. If the owner or operator takes longer than 1 hour to initiate corrective action, the alarm time shall be counted as the actual amount of time taken by the owner or operator to initiate corrective action.

(2) If a continuous opacity monitoring system is used to meet the monitoring requirements in §63.1510, the owner or operator must:

(i) Initiate corrective action within 1 hour of any 6-minute average reading of 5 percent or more opacity; and

(ii) Complete the corrective action procedures in accordance with the OM&M plan.

(3) Maintain the 3-hour block average inlet temperature for each fabric filter at or below the average temperature established during the performance test, plus 14 °C (plus 25 °F).

(4) For a continuous lime injection system, maintain free-flowing lime in the hopper to the feed device at all times and maintain the lime feeder setting at the same level established during the performance test.

(5) Maintain the total reactive chlorine flux injection rate for each operating cycle or time period used in the performance test at or below the average rate established during the performance test.

(6) Operate each sidewell furnace such that:

(i) The level of molten metal remains above the top of the passage between the sidewell and hearth during reactive flux injection, unless emissions from both the sidewell and the hearth are included in demonstrating compliance with all applicable emission limits.

(ii) Reactive flux is added only in the sidewell, unless emissions from both the sidewell and the hearth are included in demonstrating compliance with all applicable emission limits.

(n) *Group 1 furnace without add-on air pollution control devices.* The owner or operator of a group 1 furnace (including a group 1 furnace that is part of a secondary aluminum processing unit) without add-on air pollution control devices must:

(1) Maintain the total reactive chlorine flux injection rate for each operating cycle or time period used in the performance test at or below the average rate established during the performance test.

(2) Operate each furnace in accordance with the work practice/pollution prevention measures documented in the OM&M plan and within the parameter values or ranges established in the OM&M plan.

(3) Operate each group 1 melting/holding furnace subject to the emission standards in §63.1505(i)(2) using only clean charge as the feedstock.

(o) *Group 2 furnace.* The owner or operator of a new or existing group 2 furnace must:

(1) Operate each furnace using only clean charge as the feedstock.

(2) Operate each furnace using no reactive flux.

(p) *Corrective action.* When a process parameter or add-on air pollution control device operating parameter deviates from the value or range established during the performance test and incorporated in the OM&M plan, the owner or operator must initiate corrective action. Corrective action must restore operation of the affected source or emission unit (including the process or control device) to its normal or usual mode of operation as expeditiously as practicable in accordance with good air pollution control practices for minimizing emissions. Corrective actions taken must include follow-up actions necessary to return the process or control device parameter level(s) to the value or range of values established during the performance test and steps to prevent the likely recurrence of the cause of a deviation.

[65 FR 15710, Mar. 23, 2000, as amended at 67 FR 59792, Sept. 24, 2002; 67 FR 79816, Dec. 30, 2002; 69 FR 53984, Sept. 3, 2004]

§§ 63.1507-63.1509 [Reserved]

Monitoring and Compliance Requirements

§ 63.1510 Monitoring requirements.

(a) *Summary.* On and after the compliance date established by §63.1501, the owner or operator of a new or existing affected source or emission unit must monitor all control equipment and processes according to the requirements in this section. Monitoring requirements for each type of affected source and emission unit are summarized in Table 3 to this subpart.

(b) *Operation, maintenance, and monitoring (OM&M) plan.* The owner or operator must prepare and implement for each new or existing affected source and emission unit, a written operation,

maintenance, and monitoring (OM&M) plan. The owner or operator of an existing affected source must submit the OM&M plan to the responsible permitting authority no later than the compliance date established by §63.1501(a). The owner or operator of any new affected source must submit the OM&M plan to the responsible permitting authority within 90 days after a successful initial performance test under §63.1511(b), or within 90 days after the compliance date established by §63.1501(b) if no initial performance test is required. The plan must be accompanied by a written certification by the owner or operator that the OM&M plan satisfies all requirements of this section and is otherwise consistent with the requirements of this subpart. The owner or operator must comply with all of the provisions of the OM&M plan as submitted to the permitting authority, unless and until the plan is revised in accordance with the following procedures. If the permitting authority determines at any time after receipt of the OM&M plan that any revisions of the plan are necessary to satisfy the requirements of this section or this subpart, the owner or operator must promptly make all necessary revisions and resubmit the revised plan. If the owner or operator determines that any other revisions of the OM&M plan are necessary, such revisions will not become effective until the owner or operator submits a description of the changes and a revised plan incorporating them to the permitting authority. Each plan must contain the following information:

(1) Process and control device parameters to be monitored to determine compliance, along with established operating levels or ranges, as applicable, for each process and control device.

(2) A monitoring schedule for each affected source and emission unit.

(3) Procedures for the proper operation and maintenance of each process unit and add-on control device used to meet the applicable emission limits or standards in §63.1505.

(4) Procedures for the proper operation and maintenance of monitoring devices or systems used to determine compliance, including:

(i) Calibration and certification of accuracy of each monitoring device, at least once every 6 months, according to the manufacturer's instructions; and

(ii) Procedures for the quality control and quality assurance of continuous emission or opacity monitoring systems as required by the general provisions in subpart A of this part.

(5) Procedures for monitoring process and control device parameters, including procedures for annual inspections of afterburners, and if applicable, the procedure to be used for determining charge/feed (or throughput) weight if a measurement device is not used.

(6) Corrective actions to be taken when process or operating parameters or add-on control device parameters deviate from the value or range established in paragraph (b)(1) of this section, including:

(i) Procedures to determine and record the cause of any deviation or excursion, and the time the deviation or excursion began and ended; and

(ii) Procedures for recording the corrective action taken, the time corrective action was initiated, and the time/date corrective action was completed.

(7) A maintenance schedule for each process and control device that is consistent with the manufacturer's instructions and recommendations for routine and long-term maintenance.

(8) Documentation of the work practice and pollution prevention measures used to achieve compliance with the applicable emission limits and a site-specific monitoring plan as required in paragraph (o) of this section for each group 1 furnace not equipped with an add-on air pollution control device.

(c) *Labeling.* The owner or operator must inspect the labels for each group 1 furnace, group 2 furnace, in-line fluxer and scrap dryer/delacquering kiln/decoating kiln at least once per calendar month to confirm that posted labels as required by the operational standard in §63.1506(b) are intact and legible.

(d) *Capture/collection system.* The owner or operator must:

(1) Install, operate, and maintain a capture/collection system for each affected source and emission unit equipped with an add-on air pollution control device; and

(2) Inspect each capture/collection and closed vent system at least once each calendar year to ensure that each system is operating in accordance with the operating requirements in §63.1506(c) and record the results of each inspection.

(e) *Feed/charge weight.* The owner or operator of an affected source or emission unit subject to an emission limit in kg/Mg (lb/ton) or µg/Mg (gr/ton) of feed/charge must install, calibrate, operate, and maintain a device to measure and record the total weight of feed/charge to, or the aluminum production from, the affected source or emission unit over the same operating cycle or time period used in the performance test. Feed/charge or aluminum production within SAPUs must be measured and recorded on an emission unit-by-emission unit basis. As an alternative to a measurement device, the owner or operator may use a procedure acceptable to the applicable permitting authority to determine the total weight of feed/charge or aluminum production to the affected source or emission unit.

(1) The accuracy of the weight measurement device or procedure must be ±1 percent of the weight being measured. The owner or operator may apply to the permitting agency for approval to use a device of alternative accuracy if the required accuracy cannot be achieved as a result of equipment layout or charging practices. A device of alternative accuracy will not be approved unless the owner or operator provides assurance through data and information that the affected source will meet the relevant emission standard.

(2) The owner or operator must verify the calibration of the weight measurement device in accordance with the schedule specified by the manufacturer, or if no calibration schedule is specified, at least once every 6 months.

(f) *Fabric filters and lime-injected fabric filters.* The owner or operator of an affected source or emission unit using a fabric filter or lime-injected fabric filter to comply with the requirements of this subpart must install, calibrate, maintain, and continuously operate a bag leak detection system as required in paragraph (f)(1) of this section or a continuous opacity monitoring system as required in paragraph (f)(2) of this section. The owner or operator of an aluminum scrap shredder must install and operate a bag leak detection system as required in paragraph (f)(1) of this section, install and operate a continuous opacity monitoring system as required in paragraph (f)(2) of this section, or conduct visible emission observations as required in paragraph (f)(3) of this section.

(1) These requirements apply to the owner or operator of a new or existing affected source or existing emission unit using a bag leak detection system.

(i) The owner or operator must install and operate a bag leak detection system for each exhaust stack of a fabric filter.

(ii) Each triboelectric bag leak detection system must be installed, calibrated, operated, and maintained according to the “Fabric Filter Bag Leak Detection Guidance,” (September 1997). This document is available from the U.S. Environmental Protection Agency; Office of Air Quality Planning and Standards; Emissions, Monitoring and Analysis Division; Emission Measurement Center (MD–19), Research Triangle Park, NC 27711. This document also is available on the Technology Transfer Network (TTN) under Emission Measurement Technical Information (EMTIC), Continuous Emission Monitoring. Other bag leak detection systems must be installed, operated, calibrated, and maintained in a manner consistent with the manufacturer's written specifications and recommendations.

(iii) The bag leak detection system must be certified by the manufacturer to be capable of detecting PM emissions at concentrations of 10 milligrams per actual cubic meter (0.0044 grains per actual cubic foot) or less.

(iv) The bag leak detection system sensor must provide output of relative or absolute PM loadings.

(v) The bag leak detection system must be equipped with a device to continuously record the output signal from the sensor.

(vi) The bag leak detection system must be equipped with an alarm system that will sound automatically when an increase in relative PM emissions over a preset level is detected. The alarm must be located where it is easily heard by plant operating personnel.

(vii) For positive pressure fabric filter systems, a bag leak detection system must be installed in each baghouse compartment or cell. For negative pressure or induced air fabric filters, the bag leak detector must be installed downstream of the fabric filter.

(viii) Where multiple detectors are required, the system's instrumentation and alarm may be shared among detectors.

(ix) The baseline output must be established by adjusting the range and the averaging period of the device and establishing the alarm set points and the alarm delay time.

(x) Following initial adjustment of the system, the owner or operator must not adjust the sensitivity or range, averaging period, alarm set points, or alarm delay time except as detailed in the OM&M plan. In no case may the sensitivity be increased by more than 100 percent or decreased more than 50 percent over a 365-day period unless such adjustment follows a complete fabric filter inspection which demonstrates that the fabric filter is in good operating condition.

(2) These requirements apply to the owner or operator of a new or existing affected source or an existing emission unit using a continuous opacity monitoring system.

(i) The owner or operator must install, calibrate, maintain, and operate a continuous opacity monitoring system to measure and record the opacity of emissions exiting each exhaust stack.

(ii) Each continuous opacity monitoring system must meet the design and installation requirements of Performance Specification 1 in appendix B to 40 CFR part 60.

(3) These requirements apply to the owner or operator of a new or existing aluminum scrap shredder who conducts visible emission observations. The owner or operator must:

(i) Perform a visible emissions test for each aluminum scrap shredder using a certified observer at least once a day according to the requirements of Method 9 in appendix A to 40 CFR part 60. Each Method 9 test must consist of five 6-minute observations in a 30-minute period; and

(ii) Record the results of each test.

(g) *Afterburner.* These requirements apply to the owner or operator of an affected source using an afterburner to comply with the requirements of this subpart.

(1) The owner or operator must install, calibrate, maintain, and operate a device to continuously monitor and record the operating temperature of the afterburner consistent with the requirements for continuous monitoring systems in subpart A of this part.

(2) The temperature monitoring device must meet each of these performance and equipment specifications:

(i) The temperature monitoring device must be installed at the exit of the combustion zone of each afterburner.

(ii) The monitoring system must record the temperature in 15-minute block averages and determine and record the average temperature for each 3-hour block period.

(iii) The recorder response range must include zero and 1.5 times the average temperature established according to the requirements in §63.1512(m).

(iv) The reference method must be a National Institute of Standards and Technology calibrated reference thermocouple-potentiometer system or alternate reference, subject to approval by the Administrator.

(3) The owner or operator must conduct an inspection of each afterburner at least once a year and record the results. At a minimum, an inspection must include:

(i) Inspection of all burners, pilot assemblies, and pilot sensing devices for proper operation and clean pilot sensor;

(ii) Inspection for proper adjustment of combustion air;

(iii) Inspection of internal structures (*e.g.*, baffles) to ensure structural integrity;

(iv) Inspection of dampers, fans, and blowers for proper operation;

(v) Inspection for proper sealing;

(vi) Inspection of motors for proper operation;

(vii) Inspection of combustion chamber refractory lining and clean and replace lining as necessary;

(viii) Inspection of afterburner shell for corrosion and/or hot spots;

(ix) Documentation, for the burn cycle that follows the inspection, that the afterburner is operating properly and any necessary adjustments have been made; and

(x) Verification that the equipment is maintained in good operating condition.

(xi) Following an equipment inspection, all necessary repairs must be completed in accordance with the requirements of the OM&M plan.

(h) *Fabric filter inlet temperature.* These requirements apply to the owner or operator of a scrap dryer/delacquering kiln/decoating kiln or a group 1 furnace using a lime-injected fabric filter to comply with the requirements of this subpart.

(1) The owner or operator must install, calibrate, maintain, and operate a device to continuously monitor and record the temperature of the fabric filter inlet gases consistent with the requirements for continuous monitoring systems in subpart A of this part.

(2) The temperature monitoring device must meet each of these performance and equipment specifications:

(i) The monitoring system must record the temperature in 15-minute block averages and calculate and record the average temperature for each 3-hour block period.

(ii) The recorder response range must include zero and 1.5 times the average temperature established according to the requirements in §63.1512(n).

(iii) The reference method must be a National Institute of Standards and Technology calibrated reference thermocouple-potentiometer system or alternate reference, subject to approval by the Administrator.

(i) *Lime injection.* These requirements apply to the owner or operator of an affected source or emission unit using a lime-injected fabric filter to comply with the requirements of this subpart.

(1) The owner or operator of a continuous lime injection system must verify that lime is always free-flowing by either:

(i) Inspecting each feed hopper or silo at least once each 8-hour period and recording the results of each inspection. If lime is found not to be free-flowing during any of the 8-hour periods, the owner or operator must increase the frequency of inspections to at least once every 4-hour period for the next 3 days. The owner or operator may return to inspections at least once every 8 hour period if corrective action results in no further blockages of lime during the 3-day period; or

(ii) Subject to the approval of the permitting agency, installing, operating and maintaining a load cell, carrier gas/lime flow indicator, carrier gas pressure drop measurement system or other system to confirm that lime is free-flowing. If lime is found not to be free-flowing, the owner or operator must promptly initiate and complete corrective action, or

(iii) Subject to the approval of the permitting agency, installing, operating and maintaining a device to monitor the concentration of HCl at the outlet of the fabric filter. If an increase in the concentration of HCl indicates that the lime is not free-flowing, the owner or operator must promptly initiate and complete corrective action.

(2) The owner or operator of a continuous lime injection system must record the lime feeder setting once each day of operation.

(3) An owner or operator who intermittently adds lime to a lime coated fabric filter must obtain approval from the permitting authority for a lime addition monitoring procedure. The permitting authority will not approve a monitoring procedure unless data and information are submitted establishing that the procedure is adequate to ensure that relevant emission standards will be met on a continuous basis.

(j) *Total reactive flux injection rate.* These requirements apply to the owner or operator of a group 1 furnace (with or without add-on air pollution control devices) or in-line fluxer. The owner or operator must:

(1) Install, calibrate, operate, and maintain a device to continuously measure and record the weight of gaseous or liquid reactive flux injected to each affected source or emission unit.

(i) The monitoring system must record the weight for each 15-minute block period, during which reactive fluxing occurs, over the same operating cycle or time period used in the performance test.

(ii) The accuracy of the weight measurement device must be ±1 percent of the weight of the reactive component of the flux being measured. The owner or operator may apply to the permitting authority for permission to use a weight measurement device of alternative accuracy in cases where the reactive flux flow rates are so low as to make the use of a weight measurement device of ±1 percent impracticable. A device of alternative accuracy will not be approved unless the owner or operator provides assurance through data and information that the affected source will meet the relevant emission standards.

(iii) The owner or operator must verify the calibration of the weight measurement device in accordance with the schedule specified by the manufacturer, or if no calibration schedule is specified, at least once every 6 months.

(2) Calculate and record the gaseous or liquid reactive flux injection rate (kg/Mg or lb/ton) for each operating cycle or time period used in the performance test using the procedure in §63.1512(o).

(3) Record, for each 15-minute block period during each operating cycle or time period used in the performance test during which reactive fluxing occurs, the time, weight, and type of flux for each addition of:

(i) Gaseous or liquid reactive flux other than chlorine; and

(ii) Solid reactive flux.

(4) Calculate and record the total reactive flux injection rate for each operating cycle or time period used in the performance test using the procedure in §63.1512(o).

(5) The owner or operator of a group 1 furnace or in-line fluxer performing reactive fluxing may apply to the Administrator for approval of an alternative method for monitoring and recording the total reactive flux addition rate based on monitoring the weight or quantity of reactive flux per ton of feed/charge for each operating cycle or time period used in the performance test. An alternative monitoring method will not be approved unless the owner or operator provides assurance through data and information that the affected source will meet the relevant emission standards on a continuous basis.

(k) *Thermal chip dryer*. These requirements apply to the owner or operator of a thermal chip dryer with emissions controlled by an afterburner. The owner or operator must:

(1) Record the type of materials charged to the unit for each operating cycle or time period used in the performance test.

(2) Submit a certification of compliance with the applicable operational standard for charge materials in §63.1506(f)(3) for each 6-month reporting period. Each certification must contain the information in §63.1516(b)(2)(i).

(l) *Dross-only furnace.* These requirements apply to the owner or operator of a dross-only furnace. The owner or operator must:

(1) Record the materials charged to each unit for each operating cycle or time period used in the performance test.

(2) Submit a certification of compliance with the applicable operational standard for charge materials in §63.1506(i)(3) for each 6-month reporting period. Each certification must contain the information in §63.1516(b)(2)(ii).

(m) *In-line fluxers using no reactive flux.* The owner or operator of an in-line fluxer that uses no reactive flux materials must submit a certification of compliance with the operational standard for no reactive flux materials in §63.1506(l) for each 6-month reporting period. Each certification must contain the information in §63.1516(b)(2)(vi).

(n) *Sidewell group 1 furnace with add-on air pollution control devices.* These requirements apply to the owner or operator of a sidewell group 1 furnace using add-on air pollution control devices. The owner or operator must:

(1) Record in an operating log for each charge of a sidewell furnace that the level of molten metal was above the top of the passage between the sidewell and hearth during reactive flux injection, unless the furnace hearth was also equipped with an add-on control device.

(2) Submit a certification of compliance with the operational standards in §63.1506(m)(7) for each 6-month reporting period. Each certification must contain the information in §63.1516(b)(2)(iii).

(o) *Group 1 furnace without add-on air pollution control devices.* These requirements apply to the owner or operator of a group 1 furnace that is not equipped with an add-on air pollution control device.

(1) The owner or operator must develop, in consultation with the responsible permitting authority, a written site-specific monitoring plan. The site-specific monitoring plan must be submitted to the permitting authority as part of the OM&M plan. The site-specific monitoring plan must contain sufficient procedures to ensure continuing compliance with all applicable emission limits and must demonstrate, based on documented test results, the relationship between emissions of PM, HCl, and D/F and the proposed monitoring parameters for each pollutant. Test data must establish the highest level of PM, HCl, and D/F that will be emitted from the furnace. This may be determined by conducting performance tests and monitoring operating parameters while charging the furnace with feed/charge materials containing the highest anticipated levels of oils and coatings and fluxing at the highest anticipated rate. If the permitting authority determines that any revisions of the site-specific monitoring plan are

necessary to meet the requirements of this section or this subpart, the owner or operator must promptly make all necessary revisions and resubmit the revised plan to the permitting authority.

(i) The owner or operator of an existing affected source must submit the site-specific monitoring plan to the applicable permitting authority for review at least 6 months prior to the compliance date.

(ii) The permitting authority will review and approve or disapprove a proposed plan, or request changes to a plan, based on whether the plan contains sufficient provisions to ensure continuing compliance with applicable emission limits and demonstrates, based on documented test results, the relationship between emissions of PM, HCl, and D/F and the proposed monitoring parameters for each pollutant. Test data must establish the highest level of PM, HCl, and D/F that will be emitted from the furnace. Subject to permitting agency approval of the OM&M plan, this may be determined by conducting performance tests and monitoring operating parameters while charging the furnace with feed/charge materials containing the highest anticipated levels of oils and coatings and fluxing at the highest anticipated rate.

(2) Each site-specific monitoring plan must document each work practice, equipment/design practice, pollution prevention practice, or other measure used to meet the applicable emission standards.

(3) Each site-specific monitoring plan must include provisions for unit labeling as required in paragraph (c) of this section, feed/charge weight measurement (or production weight measurement) as required in paragraph (e) of this section and flux weight measurement as required in paragraph (j) of this section.

(4) Each site-specific monitoring plan for a melting/holding furnace subject to the clean charge emission standard in §63.1505(i)(3) must include these requirements:

(i) The owner or operator must record the type of feed/ charge (*e.g* ., ingot, thermally dried chips, dried scrap, etc.) for each operating cycle or time period used in the performance test; and

(ii) The owner or operator must submit a certification of compliance with the applicable operational standard for clean charge materials in §63.1506(n)(3) for each 6-month reporting period. Each certification must contain the information in §63.1516(b)(2)(iv).

(5) If a continuous emission monitoring system is included in a site-specific monitoring plan, the plan must include provisions for the installation, operation, and maintenance of the system to provide quality-assured measurements in accordance with all applicable requirements of the general provisions in subpart A of this part.

(6) If a continuous opacity monitoring system is included in a site-specific monitoring plan, the plan must include provisions for the installation, operation, and maintenance of the system to provide quality-assured measurements in accordance with all applicable requirements of this subpart.

(7) If a site-specific monitoring plan includes a scrap inspection program for monitoring the scrap contaminant level of furnace feed/charge materials, the plan must include provisions for the demonstration and implementation of the program in accordance with all applicable requirements in paragraph (p) of this section.

(8) If a site-specific monitoring plan includes a calculation method for monitoring the scrap contaminant level of furnace feed/charge materials, the plan must include provisions for the demonstration and implementation of the program in accordance with all applicable requirements in paragraph (q) of this section.

(p) *Scrap inspection program for group 1 furnace without add-on air pollution control devices.* A scrap inspection program must include:

(1) A proven method for collecting representative samples and measuring the oil and coatings content of scrap samples;

(2) A scrap inspector training program;

(3) An established correlation between visual inspection and physical measurement of oil and coatings content of scrap samples;

(4) Periodic physical measurements of oil and coatings content of randomly-selected scrap samples and comparison with visual inspection results;

(5) A system for assuring that only acceptable scrap is charged to an affected group 1 furnace; and

(6) Recordkeeping requirements to document conformance with plan requirements.

(q) *Monitoring of scrap contamination level by calculation method for group 1 furnace without add-on air pollution control devices.* The owner or operator of a group 1 furnace dedicated to processing a distinct type of furnace feed/charge composed of scrap with a uniform composition (such as rejected product from a manufacturing process for which the coating-to-scrap ratio can be documented) may include a program in the site-specific monitoring plan for determining, monitoring, and certifying the scrap contaminant level using a calculation method rather than a scrap inspection program. A scrap contaminant monitoring program using a calculation method must include:

(1) Procedures for the characterization and documentation of the contaminant level of the scrap prior to the performance test.

(2) Limitations on the furnace feed/charge to scrap of the same composition as that used in the performance test. If the performance test was conducted with a mixture of scrap and clean charge, limitations on the proportion of scrap in the furnace feed/charge to no greater than the proportion used during the performance test.

(3) Operating, monitoring, recordkeeping, and reporting requirements to ensure that no scrap with a contaminant level higher than that used in the performance test is charged to the furnace.

(r) *Group 2 furnace.* These requirements apply to the owner or operator of a new or existing group 2 furnace. The owner or operator must:

(1) Record a description of the materials charged to each furnace, including any nonreactive, non-HAP-containing/non-HAP-generating fluxing materials or agents.

(2) Submit a certification of compliance with the applicable operational standard for charge materials in §63.1506(o) for each 6-month reporting period. Each certification must contain the information in §63.1516(b)(2)(v).

(s) *Site-specific requirements for secondary aluminum processing units.* (1) An owner or operator of a secondary aluminum processing unit at a facility must include, within the OM&M plan prepared in accordance with §63.1510(b), the following information:

(i) The identification of each emission unit in the secondary aluminum processing unit;

(ii) The specific control technology or pollution prevention measure to be used for each emission unit in the secondary aluminum processing unit and the date of its installation or application;

(iii) The emission limit calculated for each secondary aluminum processing unit and performance test results with supporting calculations demonstrating initial compliance with each applicable emission limit;

(iv) Information and data demonstrating compliance for each emission unit with all applicable design, equipment, work practice or operational standards of this subpart; and

(v) The monitoring requirements applicable to each emission unit in a secondary aluminum processing unit and the monitoring procedures for daily calculation of the 3-day, 24-hour rolling average using the procedure in §63.1510(t).

(2) The SAPU compliance procedures within the OM&M plan may not contain any of the following provisions:

(i) Any averaging among emissions of differing pollutants;

(ii) The inclusion of any affected sources other than emission units in a secondary aluminum processing unit;

(iii) The inclusion of any emission unit while it is shutdown; or

(iv) The inclusion of any periods of startup, shutdown, or malfunction in emission calculations.

(3) To revise the SAPU compliance provisions within the OM&M plan prior to the end of the permit term, the owner or operator must submit a request to the applicable permitting authority containing the information required by paragraph (s)(1) of this section and obtain approval of the applicable permitting authority prior to implementing any revisions.

(t) *Secondary aluminum processing unit.* Except as provided in paragraph (u) of this section, the owner or operator must calculate and record the 3-day, 24-hour rolling average emissions of PM, HCl, and D/F for each secondary aluminum processing unit on a daily basis. To calculate the 3-day, 24-hour rolling average, the owner or operator must:

(1) Calculate and record the total weight of material charged to each emission unit in the secondary aluminum processing unit for each 24-hour day of operation using the feed/charge weight information required in paragraph (e) of this section. If the owner or operator chooses to comply on the basis of weight of aluminum produced by the emission unit, rather than weight of material charged to the emission unit, all performance test emissions results and all calculations must be conducted on the aluminum production weight basis.

(2) Multiply the total feed/charge weight to the emission unit, or the weight of aluminum produced by the emission unit, for each emission unit for the 24-hour period by the emission rate (in lb/ton of feed/charge) for that emission unit (as determined during the performance test) to provide emissions for each emission unit for the 24-hour period, in pounds.

(3) Divide the total emissions for each SAPU for the 24-hour period by the total material charged to the SAPU, or the weight of aluminum produced by the SAPU over the 24-hour period to provide the daily emission rate for the SAPU.

(4) Compute the 24-hour daily emission rate using Equation 4:

$$E_{day} = \frac{\sum_{i=1}^{n}\left(T_i \times ER_i\right)}{\sum_{i=1}^{n} T_i} \qquad (Eq.\ 4)$$

Where,

E_{day}= The daily PM, HCl, or D/F emission rate for the secondary aluminum processing unit for the 24-hour period;

T_i= The total amount of feed, or aluminum produced, for emission unit i for the 24-hour period (tons or Mg);

ER_i= The measured emission rate for emission unit i as determined in the performance test (lb/ton or µg/Mg of feed/charge); and

n = The number of emission units in the secondary aluminum processing unit.

(5) Calculate and record the 3-day, 24-hour rolling average for each pollutant each day by summing the daily emission rates for each pollutant over the 3 most recent consecutive days and dividing by 3.

(u) *Secondary aluminum processing unit compliance by individual emission unit demonstration.* As an alternative to the procedures of paragraph (t) of this section, an owner or operator may demonstrate, through performance tests, that each individual emission unit within the secondary aluminum production unit is in compliance with the applicable emission limits for the emission unit.

(v) *Alternative monitoring method for lime addition.* The owner or operator of a lime-coated fabric filter that employs intermittent or noncontinuous lime addition may apply to the Administrator for approval of an alternative method for monitoring the lime addition schedule and rate based on monitoring the weight of lime added per ton of feed/charge for each operating cycle or time period used in the performance test. An alternative monitoring method will not be approved unless the owner or operator provides assurance through data and information that the affected source will meet the relevant emission standards on a continuous basis.

(w) *Alternative monitoring methods.* If an owner or operator wishes to use an alternative monitoring method to demonstrate compliance with any emission standard in this subpart, other than those alternative monitoring methods which may be authorized pursuant to §63.1510(j)(5) and §63.1510(v), the owner or operator may submit an application to the Administrator. Any such application will be processed according to the criteria and procedures set forth in paragraphs (w)(1) through (6) of this section.

(1) The Administrator will not approve averaging periods other than those specified in this section.

(2) The owner or operator must continue to use the original monitoring requirement until necessary data are submitted and approval is received to use another monitoring procedure.

(3) The owner or operator shall submit the application for approval of alternate monitoring methods no later than the notification of the performance test. The application must contain the information specified in paragraphs (w)(3) (i) through (iii) of this section:

(i) Data or information justifying the request, such as the technical or economic infeasibility, or the impracticality of using the required approach;

(ii) A description of the proposed alternative monitoring requirements, including the operating parameters to be monitored, the monitoring approach and technique, and how the limit is to be calculated; and

(iii) Data and information documenting that the alternative monitoring requirement(s) would provide equivalent or better assurance of compliance with the relevant emission standard(s).

(4) The Administrator will not approve an alternate monitoring application unless it would provide equivalent or better assurance of compliance with the relevant emission standard(s). Before disapproving any alternate monitoring application, the Administrator will provide:

(i) Notice of the information and findings upon which the intended disapproval is based; and

(ii) Notice of opportunity for the owner or operator to present additional supporting information before final action is taken on the application. This notice will specify how much additional time is allowed for the owner or operator to provide additional supporting information.

(5) The owner or operator is responsible for submitting any supporting information in a timely manner to enable the Administrator to consider the application prior to the performance test. Neither submittal of an application nor the Administrator's failure to approve or disapprove the application relieves the owner or operator of the responsibility to comply with any provisions of this subpart.

(6) The Administrator may decide at any time, on a case-by-case basis, that additional or alternative operating limits, or alternative approaches to establishing operating limits, are necessary to demonstrate compliance with the emission standards of this subpart.

[65 FR 15710, Mar. 23, 2000, as amended at 67 FR 59792, Sept. 24, 2002; 67 FR 79816, Dec. 30, 2002; 69 FR 53984, Sept. 3, 2004]

§ 63.1511 Performance test/compliance demonstration general requirements.

(a) *Site-specific test plan.* Prior to conducting any performance test required by this subpart, the owner or operator must prepare a site-specific test plan which satisfies all of the requirements, and must obtain approval of the plan pursuant to the procedures, set forth in §63.7(c).

(b) *Initial performance test.* Following approval of the site-specific test plan, the owner or operator must demonstrate initial compliance with each applicable emission, equipment, work practice, or operational standard for each affected source and emission unit, and report the results in the notification of compliance status report as described in §63.1515(b). The owner or operator of any existing affected source for which an initial performance test is required to demonstrate compliance must conduct this initial performance test no later than the date for compliance established by §63.1501(a). The owner or operator of any new affected source for which an initial performance test is required must conduct this initial performance test within 90 days after the date for compliance established by §63.1501(b). Except for the date by which the performance test must be conducted, the owner or operator must conduct each performance test in accordance with the requirements and procedures set forth in §63.7(c). Owners or operators of affected sources located at facilities which are area sources are subject only to those performance testing requirements pertaining to D/F. Owners or operators of sweat furnaces meeting the specifications of §63.1505(f)(1) are not required to conduct a performance test.

(1) The owner or operator must conduct each test while the affected source or emission unit is operating at the highest production level with charge materials representative of the range of materials processed by the unit and, if applicable, at the highest reactive fluxing rate.

(2) Each performance test for a continuous process must consist of 3 separate runs; pollutant sampling for each run must be conducted for the time period specified in the applicable method or, in the absence of a specific time period in the test method, for a minimum of 3 hours.

(3) Each performance test for a batch process must consist of three separate runs; pollutant sampling for each run must be conducted over the entire process operating cycle.

(4) Where multiple affected sources or emission units are exhausted through a common stack, pollutant sampling for each run must be conducted over a period of time during which all affected sources or emission units complete at least 1 entire process operating cycle or for 24 hours, whichever is shorter.

(5) Initial compliance with an applicable emission limit or standard is demonstrated if the average of three runs conducted during the performance test is less than or equal to the applicable emission limit or standard.

(c) *Test methods.* The owner or operator must use the following methods in appendix A to 40 CFR part 60 to determine compliance with the applicable emission limits or standards:

(1) Method 1 for sample and velocity traverses.

(2) Method 2 for velocity and volumetric flow rate.

(3) Method 3 for gas analysis.

(4) Method 4 for moisture content of the stack gas.

(5) Method 5 for the concentration of PM.

(6) Method 9 for visible emission observations.

(7) Method 23 for the concentration of D/F.

(8) Method 25A for the concentration of THC, as propane.

(9) Method 26A for the concentration of HCl. Where a lime-injected fabric filter is used as the control device to comply with the 90 percent reduction standard, the owner or operator must measure the fabric filter inlet concentration of HCl at a point before lime is introduced to the system.

(d) *Alternative methods.* The owner or operator may use an alternative test method, subject to approval by the Administrator.

(e) *Repeat tests.* The owner or operator of new or existing affected sources and emission units located at secondary aluminum production facilities that are major sources must conduct a performance test every 5 years following the initial performance test.

(f) *Testing of representative emission units.* With the prior approval of the permitting authority, an owner or operator may utilize emission rates obtained by testing a particular type of group 1 furnace which is not controlled by any add-on control device, or by testing an in-line flux box which is not controlled by any add-on control device, to determine the emission rate for other units of the same type at the same facility. Such emission test results may only be considered to be representative of other units if all of the following criteria are satisfied:

(1) The tested emission unit must use feed materials and charge rates which are comparable to the emission units that it represents;

(2) The tested emission unit must use the same type of flux materials in the same proportions as the emission units it represents;

(3) The tested emission unit must be operated utilizing the same work practices as the emission units that it represents;

(4) The tested emission unit must be of the same design as the emission units that it represents; and

(5) The tested emission unit must be tested under the highest load or capacity reasonably expected to occur for any of the emission units that it represents.

(g) *Establishment of monitoring and operating parameter values.* The owner or operator of new or existing affected sources and emission units must establish a minimum or maximum operating parameter value, or an operating parameter range for each parameter to be monitored as required by §63.1510 that ensures compliance with the applicable emission limit or standard. To establish the minimum or maximum value or range, the owner or operator must use the appropriate procedures in this section and submit the information required by §63.1515(b)(4) in the notification of compliance status report. The owner or operator may use existing data in addition to the results of performance tests to establish operating parameter values for compliance monitoring provided each of the following conditions are met to the satisfaction of the applicable permitting authority:

(1) The complete emission test report(s) used as the basis of the parameter(s) is submitted.

(2) The same test methods and procedures as required by this subpart were used in the test.

(3) The owner or operator certifies that no design or work practice changes have been made to the source, process, or emission control equipment since the time of the report.

(4) All process and control equipment operating parameters required to be monitored were monitored as required in this subpart and documented in the test report.

(h) *Testing of commonly-ducted units within a secondary aluminum processing unit.* When group 1 furnaces and/or in-line fluxers are included in a single existing SAPU or new SAPU, and the emissions from more than one emission unit within that existing SAPU or new SAPU are manifolded to a single control device, compliance for all units within the SAPU is demonstrated if the total measured emissions from all controlled and uncontrolled units in the SAPU do not exceed the emission limits calculated for that SAPU based on the applicable equation in §63.1505(k).

(i) *Testing of commonly-ducted units not within a secondary aluminum processing unit.* With the prior approval of the permitting authority, an owner or operator may do combined performance testing of two or more individual affected sources or emission units which are not included in a single existing SAPU or new SAPU, but whose emissions are manifolded to a single control device. Any such performance testing of commonly-ducted units must satisfy the following basic requirements:

(1) All testing must be designed to verify that each affected source or emission unit individually satisfies all emission requirements applicable to that affected source or emission unit;

(2) All emissions of pollutants subject to a standard must be tested at the outlet from each individual affected source or emission unit while operating under the highest load or capacity reasonably expected to occur, and prior to the point that the emissions are manifolded together with emissions from other affected sources or emission units;

(3) The combined emissions from all affected sources and emission units which are manifolded to a single emission control device must be tested at the outlet of the emission control device;

(4) All tests at the outlet of the emission control device must be conducted with all affected sources and emission units whose emissions are manifolded to the control device operating simultaneously under the highest load or capacity reasonably expected to occur; and

(5) For purposes of demonstrating compliance of a commonly-ducted unit with any emission limit for a particular type of pollutant, the emissions of that pollutant by the individual unit shall be presumed to be controlled by the same percentage as total emissions of that pollutant from all commonly-ducted units are controlled at the outlet of the emission control device.

[65 FR 15710, Mar. 23, 2000, as amended at 67 FR 59792, Sept. 24, 2002; 67 FR 79817, Dec. 30, 2002]

§ 63.1512 Performance test/compliance demonstration requirements and procedures.

(a) *Aluminum scrap shredder.* The owner or operator must conduct performance tests to measure PM emissions at the outlet of the control system. If visible emission observations is the selected monitoring option, the owner or operator must record visible emission observations from each exhaust stack for all consecutive 6-minute periods during the PM emission test according to the requirements of Method 9 in appendix A to 40 CFR part 60.

(b) *Thermal chip dryer*. The owner or operator must conduct a performance test to measure THC and D/F emissions at the outlet of the control device while the unit processes only unpainted aluminum chips.

(c) *Scrap dryer/delacquering kiln/decoating kiln.* The owner or operator must conduct performance tests to measure emissions of THC, D/F, HCl, and PM at the outlet of the control device.

(1) If the scrap dryer/delacquering kiln/decoating kiln is subject to the alternative emission limits in §63.1505(e), the average afterburner operating temperature in each 3-hour block period must be maintained at or above 760 °C (1400 °F) for the test.

(2) The owner or operator of a scrap dryer/delacquering kiln/decoating kiln subject to the alternative limits in §63.1505(e) must submit a written certification in the notification of compliance status report containing the information required by §63.1515(b)(7).

(d) *Group 1 furnace with add-on air pollution control devices.* (1) The owner or operator of a group 1 furnace that processes scrap other than clean charge materials with emissions controlled by a lime-injected fabric filter must conduct performance tests to measure emissions of PM and D/F at the outlet of the control device and emissions of HCl at the outlet (for the emission limit) or the inlet and the outlet (for the percent reduction standard).

(2) The owner or operator of a group 1 furnace that processes only clean charge materials with emissions controlled by a lime-injected fabric filter must conduct performance tests to measure emissions of PM at the outlet of the control device and emissions of HCl at the outlet (for the emission limit) or the inlet and the outlet (for the percent reduction standard).

(3) The owner or operator may choose to determine the rate of reactive flux addition to the group 1 furnace and assume, for the purposes of demonstrating compliance with the SAPU emission limit, that all reactive flux added to the group 1 furnace is emitted. Under these circumstances, the owner or operator is not required to conduct an emission test for HCl.

(4) The owner or operator of a sidewell group 1 furnace that conducts reactive fluxing (except for cover flux) in the hearth, or that conducts reactive fluxing in the sidewell at times when the level of molten metal falls below the top of the passage between the sidewell and the hearth, must conduct the performance tests required by paragraph (d)(1) or (d)(2) of this section, to measure emissions from both the sidewell and the hearth.

(e) *Group 1 furnace (including melting holding furnaces) without add-on air pollution control devices.* In the site-specific monitoring plan required by §63.1510(o), the owner or operator of a group 1 furnace (including a melting/holding furnaces) without add-on air pollution control devices must include data and information demonstrating compliance with the applicable emission limits.

(1) If the group 1 furnace processes other than clean charge material, the owner or operator must conduct emission tests to measure emissions of PM, HCl, and D/F at the furnace exhaust outlet.

(2) If the group 1 furnace processes only clean charge, the owner or operator must conduct emission tests to simultaneously measure emissions of PM and HCl at the furnace exhaust outlet. A D/F test is not required. Each test must be conducted while the group 1 furnace (including a melting/holding furnace) processes only clean charge.

(3) The owner or operator may choose to determine the rate of reactive flux addition to the group 1 furnace and assume, for the purposes of demonstrating compliance with the SAPU emission limit, that all reactive flux added to the group 1 furnace is emitted. Under these circumstances, the owner or operator is not required to conduct an emission test for HCl.

(f) *Sweat furnace.* Except as provided in §63.1505(f)(1), the owner or operator must measure emissions of D/F from each sweat furnace at the outlet of the control device.

(g) *Dross-only furnace.* The owner or operator must conduct a performance test to measure emissions of PM from each dross-only furnace at the outlet of each control device while the unit processes only dross and salt flux as the sole feedstock.

(h) *In-line fluxer.* (1) The owner or operator of an in-line fluxer that uses reactive flux materials must conduct a performance test to measure emissions of HCl and PM or otherwise demonstrate compliance in accordance with paragraph (h)(2) of this section. If the in-line fluxer is equipped with an add-on control device, the emissions must be measured at the outlet of the control device.

(2) The owner or operator may choose to limit the rate at which reactive chlorine flux is added to an in-line fluxer and assume, for the purposes of demonstrating compliance with the SAPU emission limit, that all chlorine in the reactive flux added to the in-line fluxer is emitted as HCl. Under these circumstances, the owner or operator is not required to conduct an emission test for HCl. If the owner or operator of any in-line flux box which has no ventilation ductwork manifolded to any outlet or emission control device chooses to demonstrate compliance with the emission limit for HCl by limiting use of reactive chlorine flux and assuming that all chlorine in the flux is emitted as HCl, compliance with the HCl limit shall also constitute compliance with the emission limit for PM, and no separate emission test for PM is required. In this case, the owner or operator of the unvented in-line flux box must utilize the maximum permissible PM emission rate for the in-line flux boxes when determining the total emissions for any SAPU which includes the flux box.

(i) *Rotary dross cooler.* The owner or operator must conduct a performance test to measure PM emissions at the outlet of the control device.

(j) *Secondary aluminum processing unit.* The owner or operator must conduct performance tests as described in paragraphs (j)(1) through (3) of this section. The results of the performance tests are used to establish emission rates in lb/ton of feed/charge for PM and HCl and µg TEQ/Mg of feed/charge for D/F emissions from each emission unit. These emission rates are used for compliance monitoring in the calculation of the 3-day, 24-hour rolling average emission rates using the equation in §63.1510(t). A performance test is required for:

(1) Each group 1 furnace processing only clean charge to measure emissions of PM and either:

(i) Emissions of HCl (for the emission limit); or

(ii) The mass flow rate of HCl at the inlet to and outlet from the control device (for the percent reduction standard).

(2) Each group 1 furnace that processes scrap other than clean charge to measure emissions of PM and D/F and either:

(i) Emissions of HCl (for the emission limit); or

(ii) The mass flow rate of HCl at the inlet to and outlet from the control device (for the percent reduction standard).

(3) Each in-line fluxer to measure emissions of PM and HCl.

(k) *Feed/charge weight measurement.* During the emission test(s) conducted to determine compliance with emission limits in a kg/Mg (lb/ton) format, the owner or operator of an affected source or emission unit, subject to an emission limit in a kg/Mg (lb/ton) of feed/charge format, must measure (or otherwise determine) and record the total weight of feed/charge to the affected source or emission unit for each of the three test runs and calculate and record the total weight. An owner or operator that chooses to demonstrate compliance on the basis of the aluminum production weight must measure the weight of aluminum produced by the emission unit or affected source instead of the feed/charge weight.

(l) *Continuous opacity monitoring system.* The owner or operator of an affected source or emission unit using a continuous opacity monitoring system must conduct a performance evaluation to demonstrate compliance with Performance Specification 1 in appendix B to 40 CFR part 60. Following the performance evaluation, the owner or operator must measure and record the opacity of emissions from each exhaust stack for all consecutive 6-minute periods during the PM emission test.

(m) *Afterburner*. These requirements apply to the owner or operator of an affected source using an afterburner to comply with the requirements of this subpart.

(1) Prior to the initial performance test, the owner or operator must conduct a performance evaluation for the temperature monitoring device according to the requirements of §63.8.

(2) The owner or operator must use these procedures to establish an operating parameter value or range for the afterburner operating temperature.

(i) Continuously measure and record the operating temperature of each afterburner every 15 minutes during the THC and D/F performance tests;

(ii) Determine and record the 15-minute block average temperatures for the three test runs; and

(iii) Determine and record the 3-hour block average temperature measurements for the 3 test runs.

(n) *Inlet gas temperature.* The owner or operator of a scrap dryer/delacquering kiln/decoating kiln or a group 1 furnace using a lime-injected fabric filter must use these procedures to establish an operating parameter value or range for the inlet gas temperature.

(1) Continuously measure and record the temperature at the inlet to the lime-injected fabric filter every 15 minutes during the HCl and D/F performance tests;

(2) Determine and record the 15-minute block average temperatures for the 3 test runs; and

(3) Determine and record the 3-hour block average of the recorded temperature measurements for the 3 test runs.

(o) *Flux injection rate.* The owner or operator must use these procedures to establish an operating parameter value or range for the total reactive chlorine flux injection rate.

(1) Continuously measure and record the weight of gaseous or liquid reactive flux injected for each 15 minute period during the HCl and D/F tests, determine and record the 15-minute block average weights, and calculate and record the total weight of the gaseous or liquid reactive flux for the 3 test runs;

(2) Record the identity, composition, and total weight of each addition of solid reactive flux for the 3 test runs;

(3) Determine the total reactive chlorine flux injection rate by adding the recorded measurement of the total weight of chlorine in the gaseous or liquid reactive flux injected and the total weight of chlorine in the solid reactive flux using Equation 5:

$$W_t = F_1 W_1 + F_2 W_2 \qquad (Eq.\ 5)$$

Where,

W_t= Total chlorine usage, by weight;

F_1= Fraction of gaseous or liquid flux that is chlorine;

W_1= Weight of reactive flux gas injected;

F_2= Fraction of solid reactive chloride flux that is chlorine (*e.g.*, F = 0.75 for magnesium chloride; and

W_2= Weight of solid reactive flux;

(4) Divide the weight of total chlorine usage (W_t) for the 3 test runs by the recorded measurement of the total weight of feed for the 3 test runs; and

(5) If a solid reactive flux other than magnesium chloride is used, the owner or operator must derive the appropriate proportion factor subject to approval by the applicable permitting authority.

(p) *Lime injection.* The owner or operator of an affected source or emission unit using a lime-injected fabric filter system must use these procedures during the HCl and D/F tests to establish an operating parameter value for the feeder setting for each operating cycle or time period used in the performance test.

(1) For continuous lime injection systems, ensure that lime in the feed hopper or silo is free-flowing at all times; and

(2) Record the feeder setting for the 3 test runs. If the feed rate setting varies during the runs, determine and record the average feed rate from the 3 runs.

(q) *Bag leak detection system.* The owner or operator of an affected source or emission unit using a bag leak detection system must submit the information described in §63.1515(b)(6) as part of the notification of compliance status report to document conformance with the specifications and requirements in §63.1510(f).

(r) *Labeling.* The owner or operator of each scrap dryer/delacquering kiln/decoating kiln, group 1 furnace, group 2 furnace and in-line fluxer must submit the information described in §63.1515(b)(3) as part of the notification of compliance status report to document conformance with the operational standard in §63.1506(b).

(s) *Capture/collection system.* The owner or operator of a new or existing affected source or emission unit with an add-on control device must submit the information described in §63.1515(b)(2) as part of the notification of compliance status report to document conformance with the operational standard in §63.1506(c).

[65 FR 15710, Mar. 23, 2000, as amended at 67 FR 79817, Dec. 30, 2002; 69 FR 53984, Sept. 3, 2004]

§ 63.1513 Equations for determining compliance.

(a) *THC emission limit.* Use Equation 6 to determine compliance with an emission limit for THC:

$$E = \frac{C \times MW \times Q \times K_1 \times K_2}{M_V \times P \times 10^6} \qquad (Eq.\ 6)$$

Where,

E = Emission rate of measured pollutant, kg/Mg (lb/ton) of feed;

C = Measured volume fraction of pollutant, ppmv;

MW = Molecular weight of measured pollutant, g/g-mole (lb/lb-mole): THC (as propane) = 44.11;

Q = Volumetric flow rate of exhaust gases, dscm/hr (dscf/hr);

K_1= Conversion factor, 1 kg/1,000 g (1 lb/lb);

K_2= Conversion factor, 1,000 L/m^3 (1 ft^3 /ft^3);

M_v= Molar volume, 24.45 L/g-mole (385.3 ft^3 /lb-mole); and

P = Production rate, Mg/hr (ton/hr).

(b) *PM, HCl and D/F emission limits.* (1) Use Equation 7 of this section to determine compliance with an emission limit for PM or HCl:

$$E=\frac{C \times Q \times K_1}{P} \qquad \text{(Eq. 7)}$$

Where:

E = Emission rate of PM or HCl, kg/Mg (lb/ton) of feed;

C = Concentration of PM or HCl, g/dscm (gr/dscf);

Q = Volumetric flow rate of exhaust gases, dscm/hr (dscf/hr);

K_1= Conversion factor, 1 kg/1,000 g (1 lb/7,000 gr); and

P = Production rate, Mg/hr (ton/hr).

(2) Use Equation 7A of this section to determine compliance with an emission limit for D/F:

$$E=\frac{C \times Q}{P} \qquad \text{(Eq. 7A)}$$

Where:

E = Emission rate of D/F, µg/Mg (gr/ton) of feed;

C = Concentration of D/F, µg/dscm (gr/dscf);

Q = Volumetric flow rate of exhaust gases, dscm/hr (dscf/hr); and

P = Production rate, Mg/hr (ton/hr).

(c) *HCl percent reduction standard.* Use Equation 8 to determine compliance with an HCl percent reduction standard:

$$\%R = \frac{L_i - L_o}{L_i} \times 100 \qquad (Eq.\ 8)$$

Where,

%R = Percent reduction of the control device;

L_i= Inlet loading of pollutant, kg/Mg (lb/ton); and

L_o= Outlet loading of pollutant, kg/Mg (lb/ton).

(d) *Conversion of D/F measurements to TEQ units.* To convert D/F measurements to TEQ units, the owner or operator must use the procedures and equations in "Interim Procedures for Estimating Risks Associated with Exposures to Mixtures of Chlorinated Dibenzo-p-Dioxins and -Dibenzofurans (CDDs and CDFs) and 1989 Update" (EPA–625/3–89–016), incorporated by reference in §63.1502 of this subpart, available from the National Technical Information Service (NTIS), 5285 Port Royal Road, Springfield, Virginia, NTIS no. PB 90–145756.

(e) *Secondary aluminum processing unit.* Use the procedures in paragraphs (e)(1), (2), and (3) or the procedure in paragraph (e)(4) of this section to determine compliance with emission limits for a secondary aluminum processing unit.

(1) Use Equation 9 to compute the mass-weighted PM emissions for a secondary aluminum processing unit. Compliance is achieved if the mass-weighted emissions for the secondary aluminum processing unit (E_{cPM}) is less than or equal to the emission limit for the secondary aluminum processing unit (L_{cPM}) calculated using Equation 1 in §63.1505(k).

$$E_{C_{PM}} = \frac{\sum_{i=1}^{n}\left(E_{ti_{PM}} \times T_{ti}\right)}{\sum_{i=1}^{n}\left(T_{ti}\right)} \qquad (Eq.\ 9)$$

Where,

E_{cPM}= The mass-weighted PM emissions for the secondary aluminum processing unit;

E_{tiPM}= Measured PM emissions for individual emission unit i;

T_{ti}= The average feed rate for individual emission unit i during the operating cycle or performance test period; and

n=The number of emission units in the secondary aluminum processing unit.

(2) Use Equation 10 to compute the aluminum mass-weighted HCl emissions for the secondary aluminum processing unit. Compliance is achieved if the mass-weighted emissions for the secondary aluminum processing unit (E_{cHCl}) is less than or equal to the emission limit for the secondary aluminum processing unit (L_{cHCl}) calculated using Equation 2 in §63.1505(k).

$$E_{C_{HCl}} = \frac{\sum_{i=1}^{n}\left(E_{ti_{HCl}} \times T_{ti}\right)}{\sum_{i=1}^{n}\left(T_{ti}\right)} \qquad (Eq.\ 10)$$

Where,

E_{cHCl}= The mass-weighted HCl emissions for the secondary aluminum processing unit; and

E_{tiHCl}= Measured HCl emissions for individual emission unit i.

(3) Use Equation 11 to compute the aluminum mass-weighted D/F emissions for the secondary aluminum processing unit. Compliance is achieved if the mass-weighted emissions for the secondary aluminum processing unit is less than or equal to the emission limit for the secondary aluminum processing unit ($L_{cD/F}$) calculated using Equation 3 in §63.1505(k).

$$E_{C_{D/F}} = \frac{\sum_{i=1}^{n}\left(E_{ti_{D/F}} \times T_{ti}\right)}{\sum_{i=1}^{n}\left(T_{ti}\right)} \qquad (Eq.\ 11)$$

Where,

$E_{cD/F}$= The mass-weighted D/F emissions for the secondary aluminum processing unit; and

$E_{tiD/F}$= Measured D/F emissions for individual emission unit i.

(4) As an alternative to using the equations in paragraphs (e)(1), (2), and (3) of this section, the owner or operator may demonstrate compliance for a secondary aluminum processing unit by demonstrating that each existing group 1 furnace is in compliance with the emission limits for a new group 1 furnace in §63.1505(i) and that each existing in-line fluxer is in compliance with the emission limits for a new in-line fluxer in §63.1505(j).

[65 FR 15710, Mar. 23, 2000, as amended at 69 FR 53984, Sept. 3, 2004]

§ 63.1514 [Reserved]

Notifications, Reports, And Records

§ 63.1515 Notifications.

(a) *Initial notifications.* The owner or operator must submit initial notifications to the applicable permitting authority as described in paragraphs (a)(1) through (7) of this section.

(1) As required by §63.9(b)(1), the owner or operator must provide notification for an area source that subsequently increases its emissions such that the source is a major source subject to the standard.

(2) As required by §63.9(b)(3), the owner or operator of a new or reconstructed affected source, or a source that has been reconstructed such that it is an affected source, that has an initial startup after the effective date of this subpart and for which an application for approval of construction or reconstruction is not required under §63.5(d), must provide notification that the source is subject to the standard.

(3) As required by §63.9(b)(4), the owner or operator of a new or reconstructed major affected source that has an initial startup after the effective date of this subpart and for which an application for approval of construction or reconstruction is required by §63.5(d) must provide the following notifications:

(i) Intention to construct a new major affected source, reconstruct a major source, or reconstruct a major source such that the source becomes a major affected source;

(ii) Date when construction or reconstruction was commenced (submitted simultaneously with the application for approval of construction or reconstruction if construction or reconstruction was commenced before the effective date of this subpart, or no later than 30 days after the date construction or reconstruction commenced if construction or reconstruction commenced after the effective date of this subpart);

(iii) Anticipated date of startup; and

(iv) Actual date of startup.

(4) As required by §63.9(b)(5), after the effective date of this subpart, an owner or operator who intends to construct a new affected source or reconstruct an affected source subject to this subpart, or reconstruct a source such that it becomes an affected source subject to this subpart, must provide notification of the intended construction or reconstruction. The notification must include all the information required for an application for approval of construction or reconstruction as required by §63.5(d). For major sources, the application for approval of construction or reconstruction may be used to fulfill these requirements.

(i) The application must be submitted as soon as practicable before the construction or reconstruction is planned to commence (but no sooner than the effective date) if the construction or reconstruction commences after the effective date of this subpart; or

(ii) The application must be submitted as soon as practicable before startup but no later than 90 days after the effective date of this subpart if the construction or reconstruction had commenced and initial startup had not occurred before the effective date.

(5) As required by §63.9(d), the owner or operator must provide notification of any special compliance obligations for a new source.

(6) As required by §63.9(e) and (f), the owner or operator must provide notification of the anticipated date for conducting performance tests and visible emission observations. The owner or operator must notify the Administrator of the intent to conduct a performance test at least 60 days before the performance test is scheduled; notification of opacity or visible emission observations for a performance test must be provided at least 30 days before the observations are scheduled to take place.

(7) As required by §63.9(g), the owner or operator must provide additional notifications for sources with continuous emission monitoring systems or continuous opacity monitoring systems.

(b) *Notification of compliance status report.* Each owner or operator of an existing affected source must submit a notification of compliance status report within 60 days after the compliance date established by §63.1501(a). Each owner or operator of a new affected source must submit a notification of compliance status report within 90 days after conducting the initial performance test required by §63.1511(b), or within 90 days after the compliance date established by §63.1501(b) if no initial performance test is required. The notification must be signed by the responsible official who must certify its accuracy. A complete notification of compliance status report must include the information specified in paragraphs (a)(1) through (10) of this section. The required information may be submitted in an operating permit application, in an amendment to an operating permit application, in a separate submittal, or in any combination. In a State with an approved operating permit program where delegation of authority under section 112(l) of the CAA has not been requested or approved, the owner or operator must provide duplicate notification to the applicable Regional Administrator. If an owner or operator submits the information specified in this section at different times or in different submittals, later submittals may refer to earlier submittals instead of duplicating and resubmitting the information previously submitted. A complete notification of compliance status report must include:

(1) All information required in §63.9(h). The owner or operator must provide a complete performance test report for each affected source and emission unit for which a performance test is required. A complete performance test report includes all data, associated measurements, and calculations (including visible emission and opacity tests).

(2) The approved site-specific test plan and performance evaluation test results for each continuous monitoring system (including a continuous emission or opacity monitoring system).

(3) Unit labeling as described in §63.1506(b), including process type or furnace classification and operating requirements.

(4) The compliant operating parameter value or range established for each affected source or emission unit with supporting documentation and a description of the procedure used to establish the value (*e.g.*, lime injection rate, total reactive chlorine flux injection rate, afterburner operating temperature, fabric filter inlet temperature), including the operating cycle or time period used in the performance test.

(5) Design information and analysis, with supporting documentation, demonstrating conformance with the requirements for capture/collection systems in §63.1506(c).

(6) If applicable, analysis and supporting documentation demonstrating conformance with EPA guidance and specifications for bag leak detection systems in §63.1510(f).

(7) Manufacturer's specification or analysis documenting the design residence time of no less than 1 second for each afterburner used to control emissions from a scrap dryer/delacquering kiln/decoating kiln subject to alternative emission standards in §63.1505(e).

(8) Manufacturer's specification or analysis documenting the design residence time of no less than 0.8 seconds and design operating temperature of no less than 1,600 °F for each afterburner used to control emissions from a sweat furnace that is not subject to a performance test.

(9) The OM&M plan (including site-specific monitoring plan for each group 1 furnace with no add-on air pollution control device).

(10) Startup, shutdown, and malfunction plan, with revisions.

[65 FR 15710, Mar. 23, 2000, as amended at 67 FR 59793, Sept. 24, 2002; 67 FR 79818, Dec. 30, 2002]

§ 63.1516 Reports.

(a) *Startup, shutdown, and malfunction plan/reports.* The owner or operator must develop a written plan as described in §63.6(e)(3) that contains specific procedures to be followed for operating and maintaining the source during periods of startup, shutdown, and malfunction, and a program of corrective action for malfunctioning process and air pollution control equipment used to comply with the standard. The owner or operator shall also keep records of each event as required by §63.10(b) and record and report if an action taken during a startup, shutdown, or malfunction is not consistent with the procedures in the plan as described in §63.6(e)(3). In addition to the information required in §63.6(e)(3), the plan must include:

(1) Procedures to determine and record the cause of the malfunction and the time the malfunction began and ended; and

(2) Corrective actions to be taken in the event of a malfunction of a process or control device, including procedures for recording the actions taken to correct the malfunction or minimize emissions.

(b) *Excess emissions/summary report.* The owner or operator must submit semiannual reports according to the requirements in §63.10(e)(3). Except, the owner or operator must submit the semiannual reports within 60 days after the end of each 6-month period instead of within 30 days after the calendar half as specified in §63.10(e)(3)(v). When no deviations of parameters have occurred, the owner or operator must submit a report stating that no excess emissions occurred during the reporting period.

(1) A report must be submitted if any of these conditions occur during a 6-month reporting period:

(i) The corrective action specified in the OM&M plan for a bag leak detection system alarm was not initiated within 1 hour.

(ii) The corrective action specified in the OM&M plan for a continuous opacity monitoring deviation was not initiated within 1 hour.

(iii) The corrective action specified in the OM&M plan for visible emissions from an aluminum scrap shredder was not initiated within 1 hour.

(iv) An excursion of a compliant process or operating parameter value or range (*e.g.*, lime injection rate or screw feeder setting, total reactive chlorine flux injection rate, afterburner operating temperature, fabric filter inlet temperature, definition of acceptable scrap, or other approved operating parameter).

(v) An action taken during a startup, shutdown, or malfunction was not consistent with the procedures in the plan as described in §63.6(e)(3).

(vi) An affected source (including an emission unit in a secondary aluminum processing unit) was not operated according to the requirements of this subpart.

(vii) A deviation from the 3-day, 24-hour rolling average emission limit for a secondary aluminum processing unit.

(2) Each report must include each of these certifications, as applicable:

(i) For each thermal chip dryer: “Only unpainted aluminum chips were used as feedstock in any thermal chip dryer during this reporting period.”

(ii) For each dross-only furnace: “Only dross and salt flux were used as the charge materials in any dross-only furnace during this reporting period.”

(iii) For each sidewell group 1 furnace with add-on air pollution control devices: "Each furnace was operated such that the level of molten metal remained above the top of the passage between the sidewell and hearth during reactive fluxing, and reactive flux, except for cover flux, was added only to the sidewell or to a furnace hearth equipped with an add-on air pollution control device for PM, HCl, and D/F emissions during this reporting period."

(iv) For each group 1 melting/holding furnace without add-on air pollution control devices and using pollution prevention measures that processes only clean charge material: "Each group 1 furnace without add-on air pollution control devices subject to emission limits in §63.1505(i)(2) processed only clean charge during this reporting period."

(v) For each group 2 furnace: "Only clean charge materials were processed in any group 2 furnace during this reporting period, and no fluxing was performed or all fluxing performed was conducted using only nonreactive, non-HAP-containing/non-HAP-generating fluxing gases or agents, except for cover fluxes, during this reporting period."

(vi) For each in-line fluxer using no reactive flux: "Only nonreactive, non-HAP-containing, non-HAP-generating flux gases, agents, or materials were used at any time during this reporting period."

(3) The owner or operator must submit the results of any performance test conducted during the reporting period, including one complete report documenting test methods and procedures, process operation, and monitoring parameter ranges or values for each test method used for a particular type of emission point tested.

(c) *Annual compliance certifications.* For the purpose of annual certifications of compliance required by 40 CFR part 70 or 71, the owner or operator must certify continuing compliance based upon, but not limited to, the following conditions:

(1) Any period of excess emissions, as defined in paragraph (b)(1) of this section, that occurred during the year were reported as required by this subpart; and

(2) All monitoring, recordkeeping, and reporting requirements were met during the year.

[65 FR 15710, Mar. 23, 2000, as amended at 69 FR 53984, Sept. 3, 2004; 71 FR 20461, Apr. 20, 2006]

§ 63.1517 Records

(a) As required by §63.10(b), the owner or operator shall maintain files of all information (including all reports and notifications) required by the general provisions and this subpart.

(1) The owner or operator must retain each record for at least 5 years following the date of each occurrence, measurement, maintenance, corrective action, report, or record. The most recent 2 years of records must be retained at the facility. The remaining 3 years of records may be retained off site.

(2) The owner or operator may retain records on microfilm, computer disks, magnetic tape, or microfiche; and

(3) The owner or operator may report required information on paper or on a labeled computer disk using commonly available and EPA-compatible computer software.

(b) In addition to the general records required by §63.10(b), the owner or operator of a new or existing affected source (including an emission unit in a secondary aluminum processing unit) must maintain records of:

(1) For each affected source and emission unit with emissions controlled by a fabric filter or a lime-injected fabric filter:

(i) If a bag leak detection system is used, the number of total operating hours for the affected source or emission unit during each 6-month reporting period, records of each alarm, the time of the alarm, the time corrective action was initiated and completed, and a brief description of the cause of the alarm and the corrective action(s) taken.

(ii) If a continuous opacity monitoring system is used, records of opacity measurement data, including records where the average opacity of any 6-minute period exceeds 5 percent, with a brief explanation of the cause of the emissions, the time the emissions occurred, the time corrective action was initiated and completed, and the corrective action taken.

(iii) If an aluminum scrap shredder is subject to visible emission observation requirements, records of all Method 9 observations, including records of any visible emissions during a 30-minute daily test, with a brief explanation of the cause of the emissions, the time the emissions occurred, the time corrective action was initiated and completed, and the corrective action taken.

(2) For each affected source with emissions controlled by an afterburner:

(i) Records of 15-minute block average afterburner operating temperature, including any period when the average temperature in any 3-hour block period falls below the compliant operating parameter value with a brief explanation of the cause of the excursion and the corrective action taken; and

(ii) Records of annual afterburner inspections.

(3) For each scrap dryer/delacquering kiln/decoating kiln and group 1 furnace, subject to D/F and HCl emission standards with emissions controlled by a lime-injected fabric filter, records of 15-minute block average inlet temperatures for each lime-injected fabric filter, including any period when the 3-hour block average temperature exceeds the compliant operating parameter value +14 °C (+25 °F), with a brief explanation of the cause of the excursion and the corrective action taken.

(4) For each affected source and emission unit with emissions controlled by a lime-injected fabric filter:

(i) Records of inspections at least once every 8-hour period verifying that lime is present in the feeder hopper or silo and flowing, including any inspection where blockage is found, with a brief explanation of the cause of the blockage and the corrective action taken, and records of inspections at least once every 4-hour period for the subsequent 3 days. If flow monitors, pressure drop sensors or load cells are used to verify that lime is present in the hopper and flowing, records of all monitor or sensor output including any event where blockage was found, with a brief explanation of the cause of the blockage and the corrective action taken;

(ii) If lime feeder setting is monitored, records of daily inspections of feeder setting, including records of any deviation of the feeder setting from the setting used in the performance test, with a brief explanation of the cause of the deviation and the corrective action taken.

(iii) If lime addition rate for a noncontinuous lime injection system is monitored pursuant to the approved alternative monitoring requirements in §63.1510(v), records of the time and mass of each lime addition during each operating cycle or time period used in the performance test and calculations of the average lime addition rate (lb/ton of feed/charge).

(5) For each group 1 furnace (with or without add-on air pollution control devices) or in-line fluxer, records of 15-minute block average weights of gaseous or liquid reactive flux injection, total reactive flux injection rate and calculations (including records of the identity, composition, and weight of each addition of gaseous, liquid or solid reactive flux), including records of any period the rate exceeds the compliant operating parameter value and corrective action taken.

(6) For each continuous monitoring system, records required by §63.10(c).

(7) For each affected source and emission unit subject to an emission standard in kg/Mg (lb/ton) of feed/charge, records of feed/charge (or throughput) weights for each operating cycle or time period used in the performance test.

(8) Approved site-specific monitoring plan for a group 1 furnace without add-on air pollution control devices with records documenting conformance with the plan.

(9) Records of all charge materials for each thermal chip dryer, dross-only furnace, and group 1 melting/holding furnaces without air pollution control devices processing only clean charge.

(10) Operating logs for each group 1 sidewell furnace with add-on air pollution control devices documenting conformance with operating standards for maintaining the level of molten metal above the top of the passage between the sidewell and hearth during reactive flux injection and for adding reactive flux only to the sidewell or a furnace hearth equipped with a control device for PM, HCl, and D/F emissions.

(11) For each in-line fluxer for which the owner or operator has certified that no reactive flux was used:

(i) Operating logs which establish that no source of reactive flux was present at the in-line fluxer;

(ii) Labels required pursuant to §63.1506(b) which establish that no reactive flux may be used at the in-line fluxer; or

(iii) Operating logs which document each flux gas, agent, or material used during each operating cycle.

(12) Records of all charge materials and fluxing materials or agents for a group 2 furnace.

(13) Records of monthly inspections for proper unit labeling for each affected source and emission unit subject to labeling requirements.

(14) Records of annual inspections of emission capture/collection and closed vent systems.

(15) Records for any approved alternative monitoring or test procedure.

(16) Current copy of all required plans, including any revisions, with records documenting conformance with the applicable plan, including:

(i) Startup, shutdown, and malfunction plan;

(ii) OM&M plan; and

(iii) Site-specific secondary aluminum processing unit emission plan (if applicable).

(17) For each secondary aluminum processing unit, records of total charge weight, or if the owner or operator chooses to comply on the basis of aluminum production, total aluminum produced for each 24-hour period and calculations of 3-day, 24-hour rolling average emissions.

[65 FR 15710, Mar. 23, 2000, as amended at 67 FR 79818, Dec. 30, 2002]

Other

§ 63.1518 Applicability of general provisions.

The requirements of the general provisions in subpart A of this part that are applicable to the owner or operator subject to the requirements of this subpart are shown in appendix A to this subpart.

§ 63.1519 Implementation and enforcement.

(a) This subpart can be implemented and enforced by the U.S. EPA, or a delegated authority such as the applicable State, local, or Tribal agency. If the U.S. EPA Administrator has delegated authority to a State, local, or Tribal agency, then that agency, in addition to the U.S. EPA, has the authority to implement and enforce this regulation. Contact the applicable U.S. EPA Regional Office to find out if this subpart is delegated to a State, local, or Tribal agency.

(b) In delegating implementation and enforcement authority of this regulation to a State, local, or Tribal agency under subpart E of this part, the authorities contained in paragraph (c) of this section are retained by the Administrator of U.S. EPA and cannot be transferred to the State, local, or Tribal agency.

(c) The authorities that cannot be delegated to State, local, or Tribal agencies are as specified in paragraphs (c)(1) through (4) of this section.

(1) Approval of alternatives to the requirements in §§63.1500 through 63.1501 and 63.1505 through 63.1506.

(2) Approval of major alternatives to test methods for under §63.7(e)(2)(ii) and (f), as defined in §63.90, and as required in this subpart.

(3) Approval of major alternatives to monitoring under §63.8(f), as defined in §63.90, and as required in this subpart.

(4) Approval of major alternatives to recordkeeping and reporting under §63.10(f), as defined in §63.90, and as required in this subpart.

[68 FR 37359, June 23, 2003]

§ 63.1520 [Reserved]

Table 1 to Subpart RRR of Part 63—Emission Standards for New and Existing Affected Sources

Table 1 to Subpart RRR--Emission Standards for New and Existing Affected Sources

Affected source/ Emission unit	Pollutant	Limit	Units
All new and existing affected sources and emission units that are controlled with a PM add-on control device and that choose to monitor with a COM; and all new and existing aluminum scrap shredders that choose to monitor with a COM or to monitor visible emissions	Opacity	10	percent
New and existing aluminum scrap shredder	PM	0.01	gr/dscf
New and existing thermal chip dryer	THC D/F[a]	0.80 2.50	lb/ton of feed µg TEQ/Mg of feed
New and existing scrap dryer/delacquering kiln/decoating kiln	PM HCl THC D/F[a]	0.08 0.80 0.06 0.25	lb/ton of feed lb/ton of feed lb/ton of feed µg TEQ/Mg of feed
Or			
Alternative limits if afterburner has a design residence time of at least 1 second and operates at a temperature of at least 1400 °F	PM HCl THC D/F[a]	0.30 1.50 0.20 5.0	lb/ton of feed lb/ton of feed lb/ton of feed µg TEQ/Mg of feed
New and existing sweat furnace	D/F[a]	0.80	ng TEQ/dscm @ 11% O_2[b]
New and existing dross-only furnace	PM	0.30	lb/ton of feed

View or download PDF

New and existing in-line fluxer[e]	HCl PM	0.04 0.01	lb/ton of feed lb/ton of feed
New and existing in-line fluxer with no reactive fluxing		No limit	Work practice: no reactive fluxing
New and existing rotary dross cooler	PM	0.04	gr/dscf
New and existing clean furnace (Group 2)		No limit	Work practices: clean charge only and no reactive fluxing
New and existing group 1 melting/holding furnace (processing only clean charge)[f]	PM HCl	0.80 0.40 or 10	lb/ton of feed lb/ton of feed percent of the HCl upstream of an add-on control device
New and existing group 1 furnace[e]	PM HCl	0.40 0.40 or 10	lb/ton of feed lb/ton of feed percent of the HCl upstream of an add-on control device
	D/F[a]	15.0	µg TEQ/Mg of feed
New and existing group 1 furnace[e] with clean charge only	PM HCl	0.40 0.40 Or 10	lb/ton of feed lb/ton of feed percent of the HCl upstream of an add-on control device
	D/F[a]	No Limit	Clean charge only

View or download PDF

New and existing secondary aluminum processing unit[a,d] (consists of all existing group 1 furnaces and existing in-line flux boxes at the facility, or all simultaneously constructed new group 1 furnaces and new in-line fluxers)	PM[e]	$L_{t_{PM}} = \frac{\sum_{i=1}^{n} (L_{i_{PM}} \times T_i)}{\sum_{i=1}^{n} (T_i)}$
	HCl[f]	$L_{t_{HCl}} = \frac{\sum_{i=1}^{n} (L_{i_{HCl}} \times T_i)}{\sum_{i=1}^{n} (T_i)}$
	D/F[g]	$L_{t_{D/F}} = \frac{\sum_{i=1}^{n} (L_{i_{D/F}} \times T_i)}{\sum_{i=1}^{n} (T_i)}$

[a] D/F limit applies to a unit at a major or area source.

[b] Sweat furnaces equipped with afterburners meeting the specifications of §63.1505(f)(1) are not required to conduct a performance test.

[c] These limits are also used to calculate the limits applicable to secondary aluminum processing units.

[d] Equation definitions: L_{iPM} = the PM emission limit for individual emission unit i in the secondary aluminum processing unit [kg/Mg (lb/ton) of feed]; T_i = the feed rate for individual emission unit i in the secondary aluminum processing unit; L_{tPM} = the overall PM emission limit for the secondary aluminum processing unit [kg/Mg (lb/ton) of feed]; L_{iHCl} = the HCl emission limit for individual emission unit i in the secondary aluminum processing unit [kg/Mg (lb/ton) of feed]; L_{tHCl} = the overall HCl emission limit for the secondary aluminum processing unit [kg/Mg (lb/ton) of feed]; $L_{iD/F}$ = the D/F emission limit for individual emission unit i [μg TEQ/Mg (gr TEQ/ton) of feed]; $L_{tD/F}$ = the overall D/F emission limit for the secondary aluminum processing unit [μg TEQ/Mg (gr TEQ/ton) of feed]; n = the number of units in the secondary aluminum processing unit.

[e] In-line fluxers using no reactive flux materials cannot be included in this calculation since they are not subject to the PM limit.

[f] In-line fluxers using no reactive flux materials cannot be included in this calculation since they are not subject to the HCl limit.

[g] Clean charge furnaces cannot be included in this calculation since they are not subject to the D/F limit.

View or download PDF

Table 2 to Subpart RRR of Part 63—Summary of Operating Requirements for New and Existing Affected Sources and Emission Units

Affected source/emission unit	Monitor type/operation/process	Operating requirements
All affected sources and emission units with an add-on air pollution control device	Emission capture and collection system	Design and install in accordance with Industrial Ventilation: A Handbook of Recommended Practice; operate in accordance with OM&M plan.[b]
All affected sources and emission units subject to production-based (lb/ton of feed) emission limits[a]	Charge/feed weight or Production weight	Operate a device that records the weight of each charge; Operate in accordance with OM&M plan.[b]
Group 1 furnace, group 2 furnace, in-line fluxer and scrap dryer/delacquering kiln/decoating kiln	Labeling	Identification, operating parameter ranges and operating requirements posted at affected sources and emission units; control device temperature and residence time requirements posted at scrap dryer/delacquering kiln/decoating kiln.
Aluminum scrap shredder with fabric filter	Bag leak detector or	Initiate corrective action within 1-hr of alarm and complete in accordance with OM&M plan[b]; operate such that alarm does not sound more than 5% of operating time in 6-month period.
	COM or	Initiate corrective action within 1-hr of a 6-minute average opacity reading of 5% or more and complete in accordance with OM&M plan.[b]
	VE	Initiate corrective action within 1-hr of any observed VE and complete in accordance with the OM&M plan.[b]
Thermal chip dryer with afterburner	Afterburner operating temperature	Maintain average temperature for each 3-hr period at or above average operating temperature during the performance test.
	Afterburner operation	Operate in accordance with OM&M plan.[b]
	Feed material	Operate using only unpainted aluminum chips.
Scrap dryer/delacquering kiln/decoating kiln with afterburner and lime-	Afterburner operating temperature	Maintain average temperature for each 3-hr period at or above average operating temperature during the performance test.

injected fabric filter		
	Afterburner operation	Operate in accordance with OM&M plan.[b]
	Bag leak detector or	Initiate corrective action within 1-hr of alarm and complete in accordance with the OM&M plan;[b]operate such that alarm does not sound more than 5% of operating time in 6-month period.
	COM	Initiate corrective action within 1-hr of a 6-minute average opacity reading of 5% or more and complete in accordance with the OM&M plan.[b]
	Fabric filter inlet temperature	Maintain average fabric filter inlet temperature for each 3-hr period at or below average temperature during the performance test +14 °C (+25 °F).
	Lime injection rate	Maintain free-flowing lime in the feed hopper or silo at all times for continuous injection systems; maintain feeder setting at level established during the performance test for continuous injection systems.
Sweat furnace with afterburner	Afterburner operating temperature	If a performance test was conducted, maintain average temperature for each 3-hr period at or above average operating temperature during the performance test; if a performance test was not conducted, and afterburner meets specifications of §63.1505(f)(1), maintain average temperature for each 3-hr period at or above 1600 °F.
	Afterburner operation	Operate in accordance with OM&M plan.[b]
Dross-only furnace with fabric filter	Bag leak detector or	Initiate corrective action within 1-hr of alarm and complete in accordance with the OM&M plan;[b]operate such that alarm does not sound more than 5% of operating time in 6-month period.
	COM	Initiate corrective action within 1-hr of a 6-minute average opacity reading of 5% or more and complete in accordance with the OM&M plan.[b]
	Feed/charge material	Operate using only dross as the feed

		material.
Rotary dross cooler with fabric filter	Bag leak detector or	Initiate corrective action within 1-hr of alarm and complete in accordance with the OM&M plan;[b]operate such that alarm does not sound more than 5% of operating time in 6-month period.
	COM	Initiate corrective action within 1-hr of a 6-minute average opacity reading of 5% or more and complete in accordance with the OM&M plan.[b]
In-line fluxer with lime-injected fabric filter (including those that are part of a secondary aluminum processing unit)	Bag leak detector or	Initiate corrective action within 1-hr of alarm and complete in accordance with the OM&M plan;[b]operate such that alarm does not sound more than 5% of operating time in 6-month period.
	COM	Initiate corrective action within 1-hr of a 6-minute average opacity reading of 5% or more and complete in accordance with the OM&M plan.[b]
	Lime injection rate	Maintain free-flowing lime in the feed hopper or silo at all times for continuous injection systems; maintain feeder setting at level established during performance test for continuous injection systems.
	Reactive flux injection rate	Maintain reactive flux injection rate at or below rate used during the performance test for each operating cycle or time period used in the performance test.
In-line fluxer (using no reactive flux material)	Flux materials	Use no reactive flux.
Group 1 furnace with lime-injected fabric filter (including those that are part of a secondary of aluminum processing unit).	Bag leak detector or	Initiate corrective action within 1-hr of alarm; operate such that alarm does not sound more than 5% of operating time in 6-month period; complete corrective action in accordance with the OM&M plan.[b]
	COM	Initiate corrective action within 1-hr of a 6-minute average opacity reading of 5% or more; complete corrective action in accordance with the OM&M plan.[b]

	Fabric filter inlet temperature	Maintain average fabric filter inlet temperature for each 3-hour period at or below average temperature during the performance test +14 °C (+25 °F).
	Reactive flux injection rate	Maintain reactive flux injection rate (kg/Mg) (lb/ton) at or below rate used during the performance test for each furnace cycle.
	Lime injection rate	Maintain free-flowing lime in the feed hopper or silo at all times for continuous injection systems; maintain feeder setting at level established at performance test for continuous injection systems.
	Maintain molten aluminum level	Operate sidewell furnaces such that the level of molten metal is above the top of the passage between sidewell and hearth during reactive flux injection, unless the hearth is also controlled.
	Fluxing in sidewell furnace hearth	Add reactive flux only to the sidewell of the furnace unless the hearth is also controlled.
Group 1 furnace without add-on controls (including those that are part of a secondary aluminum processing unit)	Reactive flux injection rate	Maintain reactive flux injection rate (kg/Mg) (lb/ton) at or below rate used during the performance test for each operating cycle or time period used in the performance test.
	Site-specific monitoring plan[c]	Operate furnace within the range of charge materials, contaminant levels, and parameter values established in the site-specific monitoring plan.
	Feed material (melting/holding furnace)	Use only clean charge.
Clean (group 2) furnace	Charge and flux materials	Use only clean charge. Use no reactive flux.

[a]Thermal chip dryers, scrap dryers/delacquering kilns/decoating kilns, dross-only furnaces, in-line fluxers and group 1 furnaces including melting/holding furnaces.

[b]OM&M plan—Operation, maintenance, and monitoring plan.

[c]Site-specific monitoring plan. Owner/operators of group 1 furnaces without control devices must include a section in their OM&M plan that documents work practice and pollution prevention measures, including procedures for scrap inspection, by which compliance is achieved with emission limits and process or feed parameter-based operating requirements. This plan and the testing to demonstrate adequacy of the monitoring plan must be developed in coordination with and approved by the permitting authority.

[65 FR 15710, Mar. 23, 2000, as amended at 67 FR 79818, Dec. 30, 2002; 69 FR 53984, Sept. 3, 2004]

Table 3 to Subpart RRR of Part 63—Summary of Monitoring Requirements for New and Existing Affected Sources and Emission Units

Affected source/Emission unit	Monitor type/Operation/Process	Monitoring requirements
All affected sources and emission units with an add-on air pollution control device	Emission capture and collection system	Annual inspection of all emission capture, collection, and transport systems to ensure that systems continue to operate in accordance with ACGIH standards.
All affected sources and emission units subject to production-based (lb/ton of feed/charge) emission limits[a]	Feed/charge weight	Record weight of each feed/charge, weight measurement device or other procedure accuracy of ±1%[b]; calibrate according to manufacturers specifications, or at least once every 6 months.
Group 1 furnace, group 2 furnace, in-line fluxer, and scrap dryer/delacquering kiln/decoating kiln	Labeling	Check monthly to confirm that labels are intact and legible.
Aluminum scrap shredder with fabric filter	Bag leak detector or	Install and operate in accordance with "Fabric Filter Bag Leak Detection Guidance"[c]; record voltage output from bag leak detector.
	COM or	Design and install in accordance with PS–1; collect data in accordance with subpart A of 40 CFR part 63; determine and record 6-minute block averages.
	VE	Conduct and record results of 30-minute daily test in accordance with Method 9.
Thermal chip dryer with	Afterburner operating	Continuous measurement device to meet

afterburner	temperature	specifications in §63.1510(g)(1); record average temperature for each 15-minute block; determine and record 3-hr block averages.
	Afterburner operation	Annual inspection of afterburner internal parts; complete repairs in accordance with the OM&M plan.
	Feed/charge material	Record identity of each feed/charge; certify feed/charge materials every 6 months.
Scrap dryer/delacquering kiln/decoating kiln with afterburner and lime-injected fabric filter	Afterburner operating temperature.	Continuous measurement device to meet specifications in §63.1510(g)(1); record temperature for each 15-minute block; determine and record 3-hr block averages.
	Afterburner operation	Annual inspection of afterburner internal parts; complete repairs in accordance with the OM&M plan.
	Bag leak detector or	Install and operate in accordance with "Fabric Filter Bag Leak Detection Guidance[c]; record voltage output from bag leak detector.
	COM	Design and Install in accordance with PS–1; collect data in accordance with subpart A of 40 CFR part 63; determine and record 6-minute block averages.
	Lime injection rate	For continuous injection systems, inspect each feed hooper or silo every 8 hours to verify that lime is free flowing; record results of each inspection. If blockage occurs, inspect every 4 hours for 3 days; return to 8-hour inspections if corrective action results in no further blockage during 3-day period, record feeder setting daily.
	Fabric filter inlet temperature.	Continous measurement device to meet specifications in §63.1510(h)(2); record temperatures in 15-minute block averages; determine and record 3-hr block averages.

Sweat furnace with afterburner	Afterburner operating temperature	Continuous measurement device to meet specifications in §63.1510(g)(1); record temperatures in 15-minute block averages; determine and record 3-hr block averages.
	Afterburner operation	Annual inspection of afterburner internal parts; complete repairs in accordance with the OM&M plan.
Dross-only furnace with fabric filter	Bag leak detector or	Install and operate in accordance with "Fabric Filter Bag Leak Detection Guidance"[c]; record output voltage from bag leak detector.
	COM	Design and install in accordance with PS–1; collect data in accordance with subpart A of 40 CFR part 63; determine and record 6-minute block averages.
	Feed/charge material	Record identity of each feed/charge; certify charge materials every 6 months.
Rotary dross cooler with fabric filter	Bag leak detector or	Install and operate in accordance with "Fabric Filter Bag Leak Detection Guidance"[c]; record output voltage from bag leak detector.
	COM	Design and install in accordance with PS–1; collect data in accordance with subpart A of 40 CFR part 63; determine and record 6-minute block averages.
In-line fluxer with lime-injected fabric filter	Bag leak detector or	Install and operate in accordance with "Fabric Filter Bag Leak Detection Guidance"[c]; record output voltage from bag leak detector.
	COM	Design and install in accordance with PS–1; collect data in accordance with subpart A of 40 CFR part 63; determine and record 6-minute block averages
	Reactive flux injection rate	Weight measurement device accuracy of ±1%[b]; calibrate according to manufacturer's specifications or at least once every 6 months; record time, weight and type of reactive flux added or injected

		for each 15-minute block period while reactive fluxing occurs; calculate and record total reactive flux injection rate for each operating cycle or time period used in performance test; or Alternative flux injection rate determination procedure per §63.1510(j)(5).
	Lime injection rate	For continuous injection systems, record feeder setting daily and inspect each feed hopper or silo every 8 hrs to verify that lime is free-flowing; record results of each inspection. If blockage occurs, inspect every 4 hrs for 3 days; return to 8-hour inspections if corrective action results in no further blockage during 3-day period.[d]
In-line fluxer using no reactive flux	Flux materials	Record flux materials; certify every 6 months for no reactive flux.
Group 1 furnace with lime-injected fabric filter	Bag leak detector or	Install and operate in accordance with "Fabric Filter Bag Leak Detection Guidance"[c]; record output voltage from bag leak detector.
	COM	Design and install in accordance with PS–1; collect data in accordance with subpart A of 40 part CFR 63; determine and record 6-minute block averages.
	Lime injection rate	For continuous injection systems, record feeder setting daily and inspect each feed hopper or silo every 8 hours to verify that lime is free-flowing; record results of each inspection. If blockage occurs, inspect every 4 hours for 3 days; return to 8-hour inspections if corrective action results in no further blockage during 3-day period.[d]
	Reactive flux injection rate	Weight measurement device accuracy of ±1%[b]; calibrate every 3 months; record weight and type of reactive flux added or injected for each 15-minute block period while reactive fluxing occurs; calculate

		and record total reactive flux injection rate for each operating cycle or time period used in performance test; or Alternative flux injection rate determination procedure per §63.1510(j)(5).
	Fabric filter inlet temperature	Continuous measurement device to meet specifications in §63.1510(h)(2); record temperatures in 15-minute block averages; determine and record 3-hour block averages.
	Maintain molten aluminum level in sidewell furnace	Maintain aluminum level operating log; certify every 6 months.
Group 1 furnace without add-on controls	Fluxing in sidewell furnace hearth	Maintain flux addition operating log; certify every 6 months.
	Reactive flux injection rate	Weight measurement device accuracy of +1%[b]; calibrate according to manufacturers specifications or at least once every six months; record weight and type of reactive flux added or injected for each 15-minute block period while reactive fluxing occurs; calculate and record total reactive flux injection rate for each operating cycle or time period used in performance test.
	OM&M plan (approved by permitting agency)	Demonstration of site-specific monitoring procedures to provide data and show correlation of emissions across the range of charge and flux materials and furnace operating parameters.
	Feed material (melting/holding furnace)	Record type of permissible feed/charge material; certify charge materials every 6 months.
Clean (group 2) furnace	Charge and flux materials	Record charge and flux materials; certify every 6 months for clean charge and no reactive flux.

[a]Thermal chip dryers, scrap dryers/delacquering kilns/decoating kilns, dross-only furnaces, in-line fluxers and group 1 furnaces or melting/holding furnaces.

[b]Permitting agency may approve measurement devices of alternative accuracy, for example in cases where flux rates are very low and costs of meters of specified accuracy are prohibitive; or where feed/charge weighing devices of specified accuracy are not practicable due to equipment layout or charging practices.

[c]Non-triboelectric bag leak detectors must be installed and operated in accordance with manufacturers' specifications.

[d]Permitting agency may approve other alternatives including load cells for lime hopper weight, sensors for carrier gas pressure, or HCl monitoring devices at fabric filter outlet.

[65 FR 15710, Mar. 23, 2000, as amended at 69 FR 53985, Sept. 3, 2004]

Appendix A to Subpart RRR of Part 63—General Provisions Applicability to Subpart RRR

Citation	Requirement	Applies to RRR	Comment
§63.1(a)(1)–(4)	General Applicability	Yes.	
§63.1(a)(5)		No	[Reserved].
§63.1(a)(6)–(8)		Yes.	
§63.1(a)(9)		No	[Reserved].
§63.1(a) (10)–(14)		Yes.	
§63.1(b)	Initial Applicability Determination	Yes	EPA retains approval authority.
§63.1(c)(1)	Applicability After Standard Established	Yes.	
§63.1(c)(2)		Yes	§63.1500(e) exempts area sources subject to this subpart from the obligation to obtain Title V operating permits.
§63.1(c)(3)		No	[Reserved].
§63.1(c)(4)–(5)		Yes.	
§63.1(d)		No	[Reserved].
§63.1(e)	Applicability of Permit	Yes.	

	Program		
§63.2	Definitions	Yes	Additional definitions in §63.1503.
§63.3	Units and Abbreviations	Yes	
§63.4(a)(1)–(3)	Prohibited Activities	Yes.	
§63.4(a)(4)		No	[Reserved]
§63.4(a)(5)		Yes.	
§63.4(b)–(c)	Circumvention/ Severability	Yes.	
§63.5(a)	Construction and Reconstruction—Applicability	Yes.	
§63.5(b)(1)	Existing, New, Reconstructed Sources—Requirements	Yes.	
§63.5(b)(2)		No	[Reserved].
§63.5(b)(3)–(6)		Yes.	
§63.5(c)		No	[Reserved].
§63.5(d)	Application for Approval of Construction/ Reconstruction	Yes.	
§63.5(e)	Approval of Construction/ Reconstruction	Yes.	
§63.5(f)	Approval of Construction/Reconstruction Based on State Review	Yes.	
§63.6(a)	Compliance with Standards and Maintenance—Applicability	Yes.	
§63.6(b)(1)–(5)	New and Reconstructed Sources—Dates	Yes.	
§63.6(b)(6)		No	[Reserved].
§63.6(b)(7)		Yes.	
§63.6(c)(1)	Existing Sources Dates	Yes	§63.1501 specifies dates.
§63.6(c)(2)		Yes.	
§63.6(c)(3)–(4)		No	[Reserved].
§63.6(c)(5)		Yes.	

§63.6(d)		No	[Reserved].
§63.6(e)(1)–(2)	Operation & Maintenance Requirements	Yes	§63.1510 requires plan.
§63.6(e)(3)	Startup, Shutdown, and Malfunction Plan	Yes.	
§63.6(f)	Compliance with Emission Standards	Yes.	
§63.6(g)	Alternative Standard	No	
§63.6(h)	Compliance with Opacity/VE Standards	Yes.	
§63.6(i)(1)–(14)	Extension of Compliance	Yes.	
§63.6(i)(15)		No	[Reserved].
§63.6(i)(16)		Yes.	
§63.6(j)	Exemption from Compliance	Yes.	
§63.7(a)–(h)	Performance Test Requirements-Applicability and Dates	Yes	Except §63.1511 establishes dates for initial performance tests.
§63.7(b)	Notification	Yes.	
§63.7(c)	Quality Assurance/Test Plan	Yes.	
§63.7(d)	Testing Facilities	Yes.	
§63.7(e)	Conduct of Tests	Yes.	
§63.7(f)	Alternative Test Method	Yes.	
§63.7(g)	Data Analysis	Yes.	
§63.7(h)	Waiver of Tests	Yes.	
§63.8(a)(1)	Monitoring Requirements—Applicability	Yes.	
§63.8(a)(2)		Yes.	
§63.8(a)(3)		No	[Reserved]
§63.8(a)(4)		Yes	
§63.8(b)	Conduct of Monitoring	Yes.	
§63.8(c)(1)–(3)	CMS Operation and Maintenance	Yes.	

§63.8(c)(4)–(8)		Yes.	
§63.8(d)	Quality Control	Yes.	
§63.8(e)	CMS Performance Evaluation	Yes.	
§63.8(f)(1)–(5)	Alternative Monitoring Method	No	§63.1510(w) includes provisions for monitoring alternatives.
§63.8(f)(6)	Alternative to RATA Test	Yes.	
§63.8(g)(1)	Data Reduction	Yes.	
§63.8(g)(2)		No	§63.1512 requires five 6-minute averages for an aluminum scrap shredder.
§63.8(g)(3)–(5)		Yes.	
§63.9(a)	Notification Requirements—Applicability	Yes.	
§63.9(b)	Initial Notifications	Yes.	
§63.9(c)	Request for Compliance Extension	Yes.	
§63.9(d)	New Source Notification for Special Compliance Requirements	Yes.	
63.9(e)	Notification of Performance Test	Yes.	
§63.9(f)	Notification of VE/Opacity Test	Yes.	
§63.9(g)	Additional CMS Notifications	Yes.	
§63.9(h)(1)–(3)	Notification of Compliance Status	Yes	Except §63.1515 establishes dates for notification of compliance status reports.
§63.9(h)(4)		No	[Reserved].
§63.9(h)(5)–(6)		Yes.	
§63.9(i)	Adjustment of Deadlines	Yes.	
§63.9(j)	Change in Previous Information	Yes.	

§63.10(a)	Recordkeeping/Reporting—Applicability	Yes.	
§63.10(b)	General Requirements	Yes	§63.1517 includes additional requirements.
§63.10(c)(1)	Additional CMS Recordkeeping	Yes.	
§63.10(c)(2)–(4)		No	[Reserved].
§63.10(c)(5)		Yes.	
§63.10(c)(6)		Yes.	
§63.10(c)(7)–(8)		Yes.	
§63.10(c)(9)		No	[Reserved].
§63.10(c)(10)–(13)		Yes.	
§63.10(c)(14)		Yes.	
§63.10(d)(1)	General Reporting Requirements	Yes.	
§63.10(d)(2)	Performance Test Results	Yes.	
§63.10(d)(3)	Opacity or VE Observations	Yes.	
§63.10(d)(4)–(5)	Progress Reports/Startup, Shutdown, and Malfunction Reports	Yes.	
§63.10(e)(1)–(2)	Additional CMS Reports	Yes.	
§63.10(e)(3)	Excess Emissions/CMS Performance Reports	Yes	Reporting deadline given in §63.1516.
§63.10(e)(4)	COMS Data Reports	Yes.	
§63.10(f)	Recordkeeping/Reporting Waiver	Yes.	
§63.11(a)–(b)	Control Device Requirements	No	Flares not applicable.
§63.12(a)–(c)	State Authority and Delegations	Yes.	EPA retains authority for applicability determinations.
§63.13	Addresses	Yes.	

§63.14	Incorporation by Reference	Yes	Chapters 3 and 5 of ACGIH Industrial Ventilation Manual for capture/collection systems; and Interim Procedures for Estimating Risk Associated with Exposure to Mixtures of Chlorinated Dibenzofurans (CDDs and CDFs) and 1989 Update (incorporated by reference in §63.1502).
§63.15	Availability of Information/Confidentiality	Yes.	

[65 FR 15710, Mar. 23, 2000, as amended at 67 FR 59793, Sept. 24, 2002; 67 FR 79818, Dec. 30, 2002; 69 FR 53986, Sept. 3, 2004; 70 FR 75346, Dec. 19, 2005]

Indiana Department of Environmental Management
Office of Air Quality

Addendum to the Technical Support Document (ATSD) for a Part 70 Significant Permit Modification

Source Description and Location

Source Name:	**Jupiter Aluminum Corporation, Inc**
Source Location:	**1745-165th Street Hammond Indiana 46320**
County:	**Lake**
SIC Code:	**3353**
Operation Permit No.:	**T 089-15690-00201**
Operation Permit Issuance Date:	**September 28, 2010**
Significant Permit Modification No.:	**089-31369-00201**
Permit Reviewer:	**Josiah Balogun**

Public Notice Information

On February 18, 2012, the Office of Air Quality (OAQ) had a notice published in The Post Tribune in Merrillville, Indiana, and The Times in Munster, Indiana stating that Jupiter Aluminum Corporation, Inc had applied for a Significant Modification to their Part 70 Operating Title V Permit issued on September 28, 2010 relating to updates in their permit. The notice also stated that OAQ proposed to issue a permit for this operation and provided information on how the public could review the proposed permit and other documentation. Finally, the notice informed interested parties that there was a period of thirty (30) days to provide comments on whether or not this permit should be issued as proposed.

Comments Received

On February 16, 2012, IDEM, OAQ received comments from Kris Massey of Hammond Department of Environmental Management (HDEM). The comments are summarized in the subsequent pages, with IDEM's corresponding responses.

No changes have been made to the TSD because the OAQ prefers that the Technical Support Document reflects the permit that was on public notice. Changes that occur after the public notice are documented in this Addendum to the Technical Support Document. This accomplishes the desired result, ensuring that these types of concerns are documented and part of the record regarding this permit decision.

The summary of the comments and IDEM, OAQ responses, including changes to the permit (language deleted is shown in ~~strikeout~~ and language added is shown in **bold**) are as follows:

Comment 1: **Condition** D.2.4(f) should say furnace #2, #6, **or** #9 ...VOC stack testing at one of the furnace**s** ... Stack testing shall be conducted at the baghouse**(s)** exhaust...

Response 1: The typo in Condition D.2.4(f) has been corrected in the permit accordingly.

D.2.4 Testing Requirements [326 IAC 2-7-6(1)] [326 IAC 2-1.1-11] [326 IAC 2-2] [326 IAC 2-1.1-5]

.....

(f) Within ninety (90) days of configuring furnace #2, #6 and #9 to combust waste oil, the Permittee shall perform PM, PM10, PM2.5 and VOC stack testing at one of the furnace**s** firing waste oil. Stack testing shall be conducted at the baghouse exhaust of the furnace being tested utilizing methods as approved by the commissioner. This test shall be repeated at least once every five (5) years from the date of this valid compliance demonstration. Testing shall be conducted in accordance with the provisions of 326 IAC 3-6 (Source Sampling Procedures). Section C - Performance Testing contains the Permittee's obligations with regard to the performance testing required by this condition.

Other Changes

Upon further review IDEM, OAQ has made the following changes to the Title V permit T089-15690-00201. (deleted language appears as ~~strikout~~ and the new language **bolded**):

Change 1: The typo in Condition D.2.4(b) has been corrected and the standard language that refers to the publication of the PM2.5 testing in Condition D.2.4(e) has been deleted from the permit since the standard has been published and companies are already testing PM2.5.

D.2.4 Testing Requirements [326 IAC 2-7-6(1)] [326 IAC 2-1.1-11] [326 IAC 2-2] [326 IAC 2-1.1-5]

.....

(b) Within ninety (90) days of start-up, in order to demonstrate compliance status with the particulate matter emissions, the Permittee shall perform PM and PM_{10} stack testing at the baghouse exhaust of Furnace~~s~~ #9 and the baghouse exhaust of the Rotary Dross Cooler utilizing methods as approved by the Commissioner. This test shall be repeated at least once every five (5) years from the date of this valid compliance demonstration. Testing shall be conducted in accordance with the provisions of 326 IAC 3-6 (Source Sampling Procedures). Section C - Performance Testing contains the Permittee's obligations with regard to the performance testing required by this condition. PM_{10} includes filterable and condensable PM10.

.....

(e) **Within ninety (90) days of start-up,** ~~In~~ **in** order to demonstrate compliance status with Condition D.0.2, the Permittee shall perform PM2.5 testing on the baghouse exhaust of the Rotary Dross Cooler, and Furnace #2, #6 and #9, ~~within 180 days of publication of the new or revised condensable PM2.5 test method(s) referenced in the U. S. EPA's Final Rule for Implementation of the New Source Review (NSR) Program for Particulate Matter Less Than 2.5 Micrometers (PM2.5), signed on May 8th, 2008.~~ This testing shall be conducted at least once every five (5) years utilizing methods as approved by the Commissioner. Testing shall be conducted in accordance with the provisions of 326 IAC 3-6 (Source Sampling Procedures). Section C - Performance Testing contains the Permittee's obligations with regard to the performance testing required by this condition. ~~PM2.5 includes filterable and condensable PM2.5.~~

.....

Indiana Department of Environmental Management
Office of Air Quality

Technical Support Document (TSD) for a Part 70 Minor Permit Modification

Source Description and Location

Source Name:	**Jupiter Aluminum Corporation**
Source Location:	**1745-165th Street Hammond Indiana 46320**
County:	**Lake**
SIC Code:	**3353**
Operation Permit No.:	**T 089-15690-00201**
Operation Permit Issuance Date:	**September 28, 2010**
Minor Permit Modification No.:	**089-31369-00201**
Permit Reviewer:	**Josiah Balogun**

Existing Approvals

The source was issued Part 70 Operating Permit No. 089-15690-00201 on September 28, 2010. The source has since received the following approvals:

(a) Administrative Amendment No. 089-30996-00201, issued on December 28, 2011.

County Attainment Status

The source is located in Lake County.

Pollutant	Designation
SO_2	Better than national standards.
CO	Attainment effective February 18, 2000, for the part of the city of East Chicago bounded by Columbus Drive on the north; the Indiana Harbor Canal on the west; 148th Street, if extended, on the south; and Euclid Avenue on the east. Unclassifiable or attainment effective November 15, 1990, for the remainder of East Chicago and Lake County.
O_3	Attainment effective May 11, 2010, for the 8-hour ozone standard.[1]
PM_{10}	Attainment effective March 11, 2003, for the cities of East Chicago, Hammond, Whiting, and Gary. Unclassifiable effective November 15, 1990, for the remainder of Lake County.
NO_2	Cannot be classified or better than national standards.
Pb	Not designated.

[1]The U. S. EPA has acknowledged in both the proposed and final rulemaking for this redesignation that the anti-backsliding provisions for the 1-hour ozone standard no longer apply as a result of the redesignation under the 8-hour ozone standard. Therefore, permits in Lake County are no longer subject to review pursuant to Emission Offset, 326 IAC 2-3. Basic nonattainment designation effective federally April 5, 2005, for PM2.5.

(a) Ozone Standards
Volatile organic compounds (VOC) and Nitrogen Oxides (NOx) are regulated under the Clean Air Act (CAA) for the purposes of attaining and maintaining the National Ambient Air Quality Standards (NAAQS) for ozone. Therefore, VOC and NOx emissions are considered when evaluating the rule applicability relating to ozone. Lake County has been designated as attainment or unclassifiable for ozone. Therefore, VOC and NOx

emissions were reviewed pursuant to the requirements for Prevention of Significant Deterioration (PSD), 326 IAC 2-2.

(b) $PM_{2.5}$
U.S. EPA, in the Federal Register Notice 70 FR 943 dated January 5, 2005, has designated Lake County as nonattainment for $PM_{2.5}$. On March 7, 2005 the Indiana Attorney General's Office, on behalf of IDEM, filed a lawsuit with the Court of Appeals for the District of Columbia Circuit challenging U.S. EPA's designation of nonattainment areas without sufficient data. However, in order to ensure that sources are not potentially liable for a violation of the Clean Air Act, the OAQ is following the U.S. EPA's New Source Review Rule for $PM_{2.5}$ promulgated on May 8, 2008. These rules became effective on July 15, 2008. Therefore, direct $PM_{2.5}$ and SO_2 emissions were reviewed pursuant to the requirements of Nonattainment New Source Review, 326 IAC 2-1.1-5. See the State Rule Applicability – Entire Source section.

(c) Other Criteria Pollutants
Lake County has been classified as attainment or unclassifiable in Indiana for all criteria pollutants. Therefore, these emissions were reviewed pursuant to the requirements for Prevention of Significant Deterioration (PSD), 326 IAC 2-2.

Fugitive Emissions

Since this source is classified as a secondary metal production plant, it is considered one of the twenty-eight (28) listed source categories, as specified in 326 IAC 2-2, 326 IAC 2-3, or 326 IAC 2-7. Therefore, fugitive emissions are counted toward the determination of PSD, Emission Offset, and Part 70 Permit applicability.

Source Status

The table below summarizes the potential to emit of the entire source, prior to the proposed modification, after consideration of all enforceable limits established in the effective permits:

Pollutant	**Emissions** (ton/yr)
PM	< 100
PM_{10}	< 100
$PM_{2.5}$	< 100
SO_2	<100
VOC	< 100
CO	< 100
NO_X	< 100
GHGs as CO_2e	---
HAPs	
Single HAPs	> 10
Total HAPs	> 25

(a) This existing source is not a major stationary source, under PSD (326 IAC 2-2), because no regulated pollutant, is emitted at a rate of one hundred (100) tons per year or more, and it is one of the twenty-eight (28) listed source categories, as specified in 326 IAC 2-2-1(ff)(1).

(b) This existing source is not a major stationary source, under nonattainment new source review rules (326 IAC 2-1.1-5) since direct $PM_{2.5}$ and/or SO_2 is emitted at a rate less than 100 tons per year.

(c) These emissions are based upon Title V operating permit No. 089-15690-00201, issued on September, 28, 2010.

(d) This existing source is a major source of HAPs, as defined in 40 CFR 63.2, because HAP emissions are greater than ten (10) tons per year for a single HAP and greater than twenty-five (25) tons per year for a combination of HAPs. Therefore, this source is a major source under Section 112 of the Clean Air Act (CAA).

Description of Proposed Modification

The Office of Air Quality (OAQ) has reviewed a modification application, submitted by Jupiter Aluminum Corporation, Inc on January 17, 2010, relating to furnaces #2, #6 and #9. These furnaces are permitted to combust waste oil, which is a back-up to the natural gas supply, however the source are presently not configured to consume waste oil. The source is requesting IDEM to modify the permit testing conditions to require testing for the waste oil within 90 days upon the configuration of these sources to fire waste oil.

Enforcement Issues

There are no pending enforcement actions related to this modification.

Emission Calculations

See Appendix A of this Technical Support Document for detailed emission calculations.

Permit Level Determination – Part 70

There is no increase in the potential to emit of any regulated pollutants as the source is not adding any new emission unit.

Pursuant to 326 IAC 2-7-12(b)(1), this modification is considered a minor Permit Modification because modifying the existing part 70 Operating Permit modification do not requires a case-by-case determination of emission limits.

Permit Level Determination – PSD

This modification does not cause any emission increases. Therefore, the requirements of 326 IAC 2-2 (PSD) are not applicable.

Federal Rule Applicability Determination

(a) There are no New Source Performance Standards (NSPS)(326 IAC 12 and 40 CFR Part 60) applicable to this proposed modification.

(b) There are no National Emission Standards for Hazardous Air Pollutants (NESHAPs) (326 IAC 14, 326 IAC 20 and 40 CFR Part 63) applicable to this proposed modification.

State Rule Applicability Determination

326 IAC 2-1.1-5 (Nonattainment New Source Review)
Nonattainment New Source Review applicability is discussed under the Permit Level Determination – PSD and Emission Offset section.

326 IAC 2-2 (PSD)
PSD applicability is discussed under the Permit Level Determination – PSD section.

Compliance Determination and Monitoring Requirements

Permits issued under 326 IAC 2-7 are required to ensure that sources can demonstrate compliance with all applicable state and federal rules on a continuous basis. All state and federal rules contain compliance provisions; however, these provisions do not always fulfill the requirement for a continuous demonstration. When this occurs, IDEM, OAQ, in conjunction with the source, must develop specific conditions to satisfy 326 IAC 2-7-5. As a result, Compliance Determination Requirements are included in the permit. The Compliance Determination Requirements in Section D of the permit are those conditions that are found directly within state and federal rules and the violation of which serves as grounds for enforcement action.

If the Compliance Determination Requirements are not sufficient to demonstrate continuous compliance, they will be supplemented with Compliance Monitoring Requirements, also in Section D of the permit. Unlike Compliance Determination Requirements, failure to meet Compliance Monitoring conditions would serve as a trigger for corrective actions and not grounds for enforcement action. However, a violation in relation to a compliance monitoring condition will arise through a source's failure to take the appropriate corrective actions within a specific time period.

There are no Compliance Monitoring and Determination Requirements applicable to this modification at this time.

Proposed Changes

The changes listed below have been made to Part 70 Operating Permit No. T089-15690-00201. Deleted language appears as ~~strikethroughs~~ and new language appears in **bold**:

Change 1: The Testing Requirements is being revised to allow the source to test for waste oil whenever the source is combusting waste oil.

D.2.4 Testing Requirements [326 IAC 2-7-6(1)] [326 IAC 2-1.1-11] [326 IAC 2-2] [326 IAC 2-1.1-5]

.....

(f) Within ninety (90) days of configuring furnace #2, #6 and #9 to combust waste oil, the Permittee shall perform PM, PM10, PM2.5 and VOC stack testing at one of the furnace firing waste oil. Stack testing shall be conducted at the baghouse exhaust of the furnace being tested utilizing methods as approved by the commissioner. This test shall be repeated at least once every five (5) years from the date of this valid compliance demonstration. Testing shall be conducted in accordance with the provisions of 326 IAC 3-6 (Source Sampling Procedures). Section C - Performance Testing contains the Permittee's obligations with regard to the performance testing required by this condition.

Other Changes

Upon further review IDEM, OAQ has made the following changes to the Title V permit T089-15690-00201. (deleted language appears as ~~strikout~~ and the new language **bolded**):

Change 1: Lake County is attainment for Ozone, therefore the nonattainment status has been deleted and the Emission Offset rule has been deleted from the permit.

A.1 General Information [326 IAC 2-7-4(c)][326 IAC 2-7-5(15)][326 IAC 2-7-1(22)]

The Permittee owns and operates a stationary secondary aluminum processing operation.

Source Address:	1745 165th Street, Hammond, Indiana 46320
General Source Phone Number:	219-933-2752
SIC Code:	3353
County Location:	Lake
Source Location Status:	~~Nonattainment for 8-hour ozone standard~~ Nonattainment for PM2.5 standard Attainment for all other criteria pollutants
Source Status:	Part 70 Operating Permit Program Minor Source, under PSD Rules Minor Source, under Nonattainment NSR for PM2.5 ~~Major Source, under Emission Offset Rules~~ Major Source, Section 112 of the Clean Air Act 1 of 28 Source Categories

Conclusion and Recommendation

The proposed modification shall be subject to the conditions of the attached proposed Part 70 Minor Permit Modification No. 089-31369-00201. The staff recommends to the Commissioner that this Part 70 Significant Permit Modification be approved.

IDEM Contact

(a) Questions regarding this proposed permit can be directed to Josiah Balogun at the Indiana Department Environmental Management, Office of Air Quality, Permits Branch, 100 North Senate Avenue, MC 61-53 IGCN 1003, Indianapolis, Indiana 46204-2251 or by telephone at (317) 234-5257 or toll free at 1-800-451-6027 extension 4-5257.

(b) A copy of the findings is available on the Internet at: http://www.in.gov/ai/appfiles/idem-caats/

(c) For additional information about air permits and how the public and interested parties can participate, refer to the IDEM's Guide for Citizen Participation and Permit Guide on the Internet at: www.idem.in.gov

ENGINEERS

1720 Walton Road Blue Bell, PA 19422 610•828•3078 Fax 610•828•7842

July 17, 2007

Mr. Mark Volkmann
Environmental Health & Safety Coordinator
Jupiter Aluminum Corp.
1745-165th Street
Hammond, IN 46320

Subject: Fugitive Particulate Matter Control Plan
IES Project No. EHS07691.02

Dear Mark:

Please find attached three copies of the Fugitive Particulate Matter Control Plan for the Jupiter Aluminum Corp. facility located in Hammond, Indiana. One copy is for your records and the other two copies are for submission to The City of Hammond Department of Environmental Management (HDEM) and The Indiana Department of Environmental Management (IDEM) once requested. Also included for your records is a full size facility layout.

Should you have any questions please feel free to contact me or Matt Miller at 610-828-3078.

Very truly yours,

Marjorie J. Fitzpatrick, QEP
Principal Project Manager

Attachment
cc: B. Miller, IES (w/o enclosures)
M. Miller, IES

FUGITIVE PARTICULATE MATTER CONTROL PLAN

JUPITER ALUMINUM
1745 – 165TH STREET
HAMMOND, IN 46320

ORIGINAL DATE OF PLAN: JULY 17, 2007

JULY 2007

TABLE OF CONTENTS

1.0	FACILITY DESCRIPTION	1
	1.1 Process Description	1
2.0	LOCATION AND CONTACT INFORMATION	3
3.0	IDENTIFICATION OF OPERATIONS	3
4.0	SITE PLAN	3
5.0	DESCRIPTION OF FACILITIES	3
	5.1 Roads and Parking Lots	3
	5.2 Storage Piles	5
	5.3 Description of Processing Facilities	5
	5.4 Description of Material Transfer Operations	6
	5.5 Other Fugitive Particulate Matter Sources	7
6.0	DESCRIPTION OF CONTROL MEASURES	7
7.0	LIST OF CONDITIONS THAT WILL PREVENT CONTROL MEASURES	8
8.0	SCHEDULE FOR ACHIEVING COMPLIANCE	9
9.0	RECORDKEEPING AND REPORTING	9

ATTACHMENTS

ATTACHMENT 1 Site Plan
ATTACHMENT 2 Recordkeeping Forms

1.0 FACILITY DESCRIPTION

Jupiter Aluminum Corporation (Jupiter) operates a secondary aluminum recycling facility in Hammond, Indiana. The facility operates a number of fugitive emission sources, including process fugitive sources, parking lots, material transfer points, and dust handling equipment.

Based on its preliminary emission estimates, Jupiter has determined that fugitive emissions from its operations exceed 5 tons per year. Emission sources that have the potential to emit more than 5 tons per year of fugitive particulate matter are subject to the requirements under 326 IAC Article 6.8, Rule 10 pertaining to fugitive particulate matter in Lake County. One of the requirements of Rule 10 is to prepare, submit, and implement a control plan for fugitive particulate matter.

This Plan was prepared to satisfy the requirements of 326 IAC 6.8-10.

1.1 Process Description

Figure 1 provides a process flow diagram for the operations at Jupiter.

Scrap aluminum is brought on site as either loose materials, bails, or in boxes and is stored indoors until needed. Aluminum scrap is charged to one of five furnaces. Furnaces 2 and 6 are the main reverberatory scrap melting furnaces. Raw materials are charged to these furnaces at a charge well. Furnace 7 is used for dross only, and Furnace 8 is currently out of service. There are plans for a proposed new furnace (Furnace 9), which will be similar to Furnaces 2 and 6.

Molten aluminum from Furnaces 2 and 6 (and future Furnace 9) is next processed in a holding furnace, which is designed to produce a homogeneous mix of aluminum. The molten aluminum is then processed in a degasser, which uses an inert gas.

All of the molten metal is then taken to a continuous caster and hot mill. The hot mill takes the ½-inch slab down to approximately ⅛-inch coils. These coils are then processed at the cold mill with an oil lubricant before being processed in one of five annealing furnaces (one additional furnace is proposed). Each annealed coil is then processed by a tension leveler and sent to the shipping department.

Dross from the furnaces is skimmed off to a pan and cooled indoors.

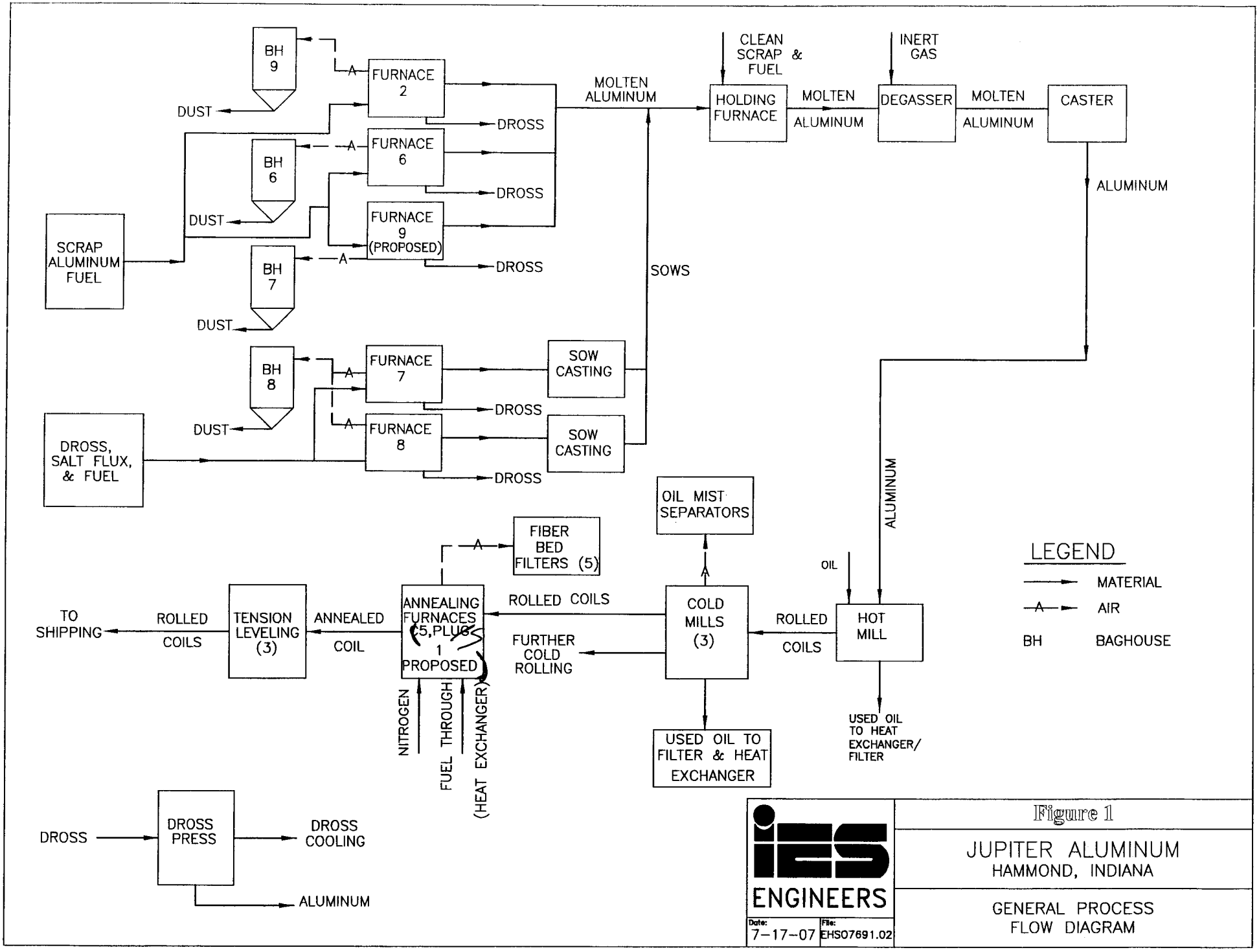
BH 9
DUST
FURNACE 2
DROSS
BH 6
DUST
FURNACE 6
DROSS
SCRAP ALUMINUM FUEL
FURNACE 9 (PROPOSED)
DROSS
BH 7
DUST
MOLTEN ALUMINUM
SOWS
CLEAN SCRAP & FUEL
HOLDING FURNACE
MOLTEN ALUMINUM
INERT GAS
DEGASSER
MOLTEN ALUMINUM
CASTER
ALUMINUM
BH 8
DUST
FURNACE 7
DROSS
SOW CASTING
DROSS, SALT FLUX, & FUEL
FURNACE 8
DROSS
SOW CASTING
ALUMINUM
OIL MIST SEPARATORS
FIBER BED FILTERS (5)
OIL
LEGEND
MATERIAL
AIR
BH BAGHOUSE
TO SHIPPING
ROLLED COILS
TENSION LEVELING (3)
ANNEALED COIL
ANNEALING FURNACES (5, PLUS 1 PROPOSED)
ROLLED COILS
FURTHER COLD ROLLING
COLD MILLS (3)
ROLLED COILS
HOT MILL
NITROGEN
FUEL THROUGH
(HEAT EXCHANGER)
USED OIL TO FILTER & HEAT EXCHANGER
USED OIL TO HEAT EXCHANGER/ FILTER
DROSS
DROSS PRESS
DROSS COOLING
ALUMINUM
ENGINEERS
Date: 7-17-07
File: EHS07691.02
Figure 1
JUPITER ALUMINUM
HAMMOND, INDIANA
GENERAL PROCESS FLOW DIAGRAM

2.0 LOCATION AND CONTACT INFORMATION

This plan addresses fugitive particulate matter sources located at:

Jupiter Aluminum Corp.
1745 – 165th Street
Hammond, IN 46320

The site contact is:

Mark Volkmann
Environmental Health & Safety Coordinator
Phone: (219) 933-2752
Cell: (219) 746-0832
Fax: (219) 933-2720

Jupiter is responsible for the implementation of this Plan.

3.0 IDENTIFICATION OF OPERATIONS

The following fugitive particulate matter operations exist at this facility:

- Paved roads and parking lots
- Raw material transfer operations
- Indoor storage of materials
- Dust handling equipment
- Dross handling operations
- Process fugitive emissions from indoor operations of the melting furnaces

4.0 SITE PLAN

Attachment 1 contains a site plan showing the location of the fugitive dust sources.

5.0 DESCRIPTION OF FACILITIES

This section provides descriptions of the fugitive particulate emission sources and processing facilities located at Jupiter. A general process description and process flow diagram are provided in Section 1. Attachment 1 shows the location of the fugitive particulate matter sources.

5.1 Roads and Parking Lots

All roads that vehicle traffic travels on within the facility's property lines are paved as is the parking lot. Tables 1 and 2 below summarize information relative to PM_{10} emissions from the roads and parking lots.

Table 1
Summary of Paved Road Segments
Jupiter Aluminum, Hammond, Indiana

Road Segment	Type of Vehicle Traffic	Average Vehicle Traffic	Average Vehicle Weight	Silt Loading (g/m^2)	Length	Width
Paved area to Receiving area	Semi Trucks and Trailers	≈ 10,300 trips per year	≈ 60,000 lbs	9.7	≈100 ft	≈300 ft
Outside Path from Receiving to Building No. 3	Fork Trucks and Payloaders	≈ 165,800 trips per year	≈ 10,000 lbs	9.7	≈100 ft	≈25 ft
Road from Dross Storage Building to Storage Building (Building No. 2)	Fork Trucks	≈ 98,350 trips per year	≈ 10,000 lbs	9.7	≈150 ft	≈50 ft
Shipping area to access road	Semi Trucks and Trailers	≈ 9,850 Trips per year	≈ 60,000 lbs	9.7	≈100 ft	≈100 ft
Total other facility roads	Fork Trucks	≈ 98,300 trips per year	≈ 10,000 lbs	9.7	≈1,650 ft	≈15 ft

Table 2
Summary of Parking Lots
Jupiter Aluminum, Hammond, Indiana

Parking Lots	Type of Vehicle Traffic	Average Vehicle Traffic	Average Vehicle Weight	Silt Loading (g/m^2)	Length	Width
Main parking area	Passenger Vehicles	300 trips/day	3,300 lbs	9.7	385 ft	191 ft
Maintenance Building lot	Fork Trucks	50 trips/day	10,000 lbs	9.7	100 ft	75 ft

Jupiter has not measured silt loading on the roads and parking lots at its facility. The values presented on the tables above are based on data for iron and steel plants published by the U.S. Environmental Protection Agency (AP-42, Compilation of Air Pollutant Emission Factors for Stationary Sources, Section 13.2.1, Paved Roads, November 2006, Table 13.2.1-4. Also, in this same AP-42 section, the average number of days with more than 0.01 inches of precipitation is approximately 130 (see Figure 12.2.1-2). Precipitation above this amount on a daily basis helps reduce fugitive particulate matter emissions.

5.2 Storage piles

Material storage piles consist of scrap aluminum, which can be loose or in bails or boxes. The scrap aluminum can vary in size from smaller scraps to larger sheets. The scrap metal is stored indoors. The moisture content of the scrap metal is negligible. The silt content of the scrap metal is unknown but is expected to be low. The facility product throughput is approximately 165,000 tons per year.

Material is brought into the facility inside dump trailers and van trailers. The typical truck used has a gross vehicle weight of 80,000 pounds loaded and 40,000 pounds empty. Material is transferred to furnaces via fork trucks and payloaders. There are total of five payloaders each with a 5 cubic yard bucket. Two of the payloaders are active with furnace operations, one is used for general purpose tasks and two are on stand-by. There are approximately 30 diesel fork trucks.

5.3 Description of Processing Facilities

A general description and process flow diagram are presented in Section 1.

Jupiter operates various process equipment at its facility in Hammond, Indiana. Table 3 lists the pieces of equipment and their corresponding capacities.

Table 3
Summary of Equipment and Rated Capacities
Jupiter Aluminum, Hammond, Indiana

Equipment	Limited Production Rate
Reverberatory Furnace No. 2	18 tons per hour and 55,000 tons per year
Reverberatory Furnace No. 6	18 tons per hour and 55,000 tons per year
Reverberatory Furnace No. 7	1.17 tons per hour and 10,000 tons per year
Reverberatory Furnace No. 9	Proposed 18 tons per hour and 55,000 tons per year
Rotary Furnace No. 8	2.99 tons per hour and 5,000 tons per year
Holding Furnace	165,000 tons per year
Caster	165,000 tons per year
Degasser	165,000 tons per year
Hot Mill	34.2 tons per hour and 150,000 tons per year
Cold Mill No. 2	22 tons per hour and 80,000 tons per year
Cold Mill No. 3	22 tons per hour and 55,000 tons per year
Cold Mill No. 4	22 tons per hour and 55,000 tons per year
Annealing Furnace No. 1	4.86 tons per hour and 36,000 tons per year
Annealing Furnace No. 2	4.86 tons per hour and 36,000 tons per year
Annealing Furnace No. 3	4.86 tons per hour and 36,000 tons per year
Annealing Furnace No. 4	4.86 tons per hour and 36,000 tons per year
Annealing Furnace No. 5	4.86 tons per hour and 36,000 tons per year
Annealing Furnace No. 6	Proposed 9.73 tons per hour and 72,000 tons per year

Tension Leveler (three)	22 tons per hour and 60,000 tons per year (each)
Dross Cooling	10,587 tons per year
Cleaver Brooks Boiler	6 MMBtu/hr

Table 4 presents a summary of the air pollution control equipment at the Jupiter facility used for dust control.

Table 4
Summary of Particulate Matter Air Pollution Control Equipment
Jupiter Aluminum, Hammond, Indiana

Control Equipment ID	Type of Control	Process Equipment Served	Estimated Efficiency (%)
BH9	Baghouse	Furnace 2	≈ 99
BH6	Baghouse	Furnace 6	≈ 99
BH8	Baghouse	Furnaces 7 and 8	≈ 99
BH7	Baghouse	Furnace 9	≈ 99
FB1	Fiber bed filter (opacity reduction)	Annealing Furnace 1	≈ 99
FB2	Fiber bed filter (opacity reduction)	Annealing Furnace 2	≈ 99
FB3	Fiber bed filter (opacity reduction)	Annealing Furnace 3	≈ 99
FB4	Fiber bed filter (opacity reduction)	Annealing Furnace 4	≈ 99
FB5	Fiber bed filter (opacity reduction)	Annealing Furnace 5	≈ 99
FB6 (proposed)	Fiber bed filter (opacity reduction)	Annealing Furnace 6 (proposed)	≈ 99

Oil mist separators are also used to reduce oil mist emissions from the exhaust of the cold mills.

5.4 Description of Material Transfer Operations

Most of the scrap aluminum material transfers and storage occurs indoors. Material is delivered loose in dump trailers or as bails/boxes in van trailers to the indoor receiving dock (Building No. 4). Loose material is dumped and bails/boxes are off loaded with fork trucks. The average gross weight of delivery vehicles is approximately 60,000 pounds (40,000 empty and 80,000 loaded). Material is then transferred to the furnaces (Building No. 3) via payloader or fork truck. When transferring the material, fork trucks and payloaders must travel between Building No. 4 and Building No. 3 by going outdoors for approximately 100 feet. On occasion, some bails/boxes may be transferred to a storage building (Building No. 2) across street approximately 150 feet from the main facility. These are the only times material is handled outdoors.

The Baghouses are located outside of the dross storage area adjacent to Building No. 3. The baghouse hoppers are unloaded by dumping the baghouse dust into covered portable hoppers. Each hopper is approximately 2 cubic yards. The hoppers are transported to an indoor roll off container. During this transfer, the fork trucks must travel between the dross storage building and Building No. 2, which are approximately 150 feet apart.

5.5 Other Fugitive Particulate Matter Sources

Other fugitive particulate matter emission sources at the facility are related to process operations and include fugitive emissions from the operations of the aluminum melt furnaces (charging, tapping, and melting operations) and dross removal and handling activities. The holding furnace and degasser have negligible fugitive particulate matter emissions. Some oils are emitted as particulate matter from the rolling mills and annealing furnaces; fugitive emissions from these operations are believed to be negligible.

Melt Furnace Operations –

The largest and most commonly used aluminum melt furnaces are Furnaces 2 and 6. For these two furnaces, scrap metal is charged to a charge well, which is hooded and exhausted to baghouses. Melting operations also exhaust to the baghouses as does tapping. Proposed Furnace 9 will operate similarly to Furnaces 2 and 6. The estimated capture efficiency of the hoods is greater than 98 percent.

Furnace 7 does not have a charging well, but is equipped with a hood over the furnace door, which exhausts to a baghouse. Furnace 8 is also equipped with a hood over the furnace door, which exhausts to a baghouse. The estimated capture efficiency of these hoods is approximately 98 percent.

Dross Removal and Handling Operations –

Dross/slag is scraped from the charging wells of the melt furnaces once per shift. This is accomplished by attaching a rake to a fork truck and scraping the dross into a pan. The dross is then transferred to the dross cooling area, via fork truck, where it is pressed and cooled. Dross scraping for Furnaces 2 and 6, as well as proposed Furnace 9, is done under the charging well hood and is exhausted to baghouses. Fugitive emissions from other dross handling activities are nominal. Dross handling is performed indoors.

6.0 DESCRIPTION OF CONTROL MEASURES

Material Handling –

Material handling activities, including storage piles, are located and conducted indoors. This limits the amount of material exposed to wind and decreases the amount of fugitive particulate matter released into the atmosphere. The procedure for handling materials indoors is already in place at Jupiter.

Material Delivery and Vehicle Traffic –

Jupiter Aluminum currently limits material delivery vehicle traffic to the indoor receiving dock. Once on the facility property, trucks travel approximately 100 feet to the receiving dock. Since such a short distance is traveled and the truck speed is limited, it reduces the amount of fugitive particulate matter that can be generated.

The parking area is for Jupiter employees and visitors. Only passenger vehicles can travel into the parking area and speed is limited.

All roads that handle vehicle traffic on the property are paved with asphalt. Vehicle traffic is limited to the parking lot, receiving doc, and shipping dock. Smaller roads on the property are limited to fork truck traffic.

The procedures for minimizing fugitive particulate matter emissions from traffic have already been implemented by Jupiter.

Process Fugitive Emission Sources –

Baghouses are currently used to reduce fugitive particulate matter emissions from process operations, where necessary. The baghouses collect fugitive particulate matter that is generated during the charging, tapping, and melting and the removal of dross. The control equipment is already in place at Jupiter.

Dust Handling Equipment –

The baghouse hoppers are dumped into covered portable hoppers. Each hopper is approximately 2 cubic yards. The hoppers are transported to an indoor roll off container. The dust handling procedures are already in place at Jupiter.

7.0 LIST OF CONDITIONS THAT WILL PREVENT CONTROL MEASURES

Below is a list of conditions that may prevent the control measures and practices from being applied at Jupiter and alternative measures that will achieve compliance with the emission limits:

Material Handling –

Passive controls are used to control fugitive particulate matter emissions from material handling operations, including storage piles. Jupiter does not foresee a circumstance when the material will be stored or handled outdoors.

Material Delivery and Vehicle Traffic –

Without redesigning the layout and material flow through the facility, Jupiter does not foresee circumstances that will require incoming and outgoing material to be transported on unpaved surfaces. Similarly, Jupiter intends to keep the employee and visitor parking lot paved.

Process Fugitive Emission Sources –

There is the potential for a baghouse to fail at Jupiter. If this does occur, Jupiter will safely bring the operation to a stopping point and operate the melt furnace in a manner that minimizes emissions. Where possible, Jupiter will use the other existing baghouses at the facility to minimize emissions. To help minimize baghouse failures, Jupiter conducts regular preventive maintenance of the units and maintains an inventory of spare parts.

Dust Handling Equipment –

Jupiter does not foresee a situation where dust would not be handled in the prescribed manner (i.e., unloading to a covered container).

8.0 SCHEDULE FOR ACHIEVING COMPLIANCE

Jupiter complies with the applicable provisions of this Plan.

9.0 RECORDKEEPING AND REPORTING

Jupiter maintains the following documents to show compliance with the control measures and practices addressed in this Plan:

- A site plan showing the location, identification, length, and width of onsite roadways.
- A log recording incidents when control measures were not used and a statement of explanation. A copy of the form is provided in Attachment 2.
- A quarterly report to the Indiana Department of Environmental Management and Hammond Department of Environmental Management. A copy of an example report is provided in Attachment 2. The report will be submitted within 30 days from the end of each quarter. For the purposes of this report, the quarters end on March 31, June 30, September 30, and December 31.

Records related to this Plan will be maintained for at least 3 years and will be made available for inspection or copying to the Indiana Department of Environmental Management or Hammond Department of Environmental Management during working hours.

ATTACHMENT 1

SITE PLAN

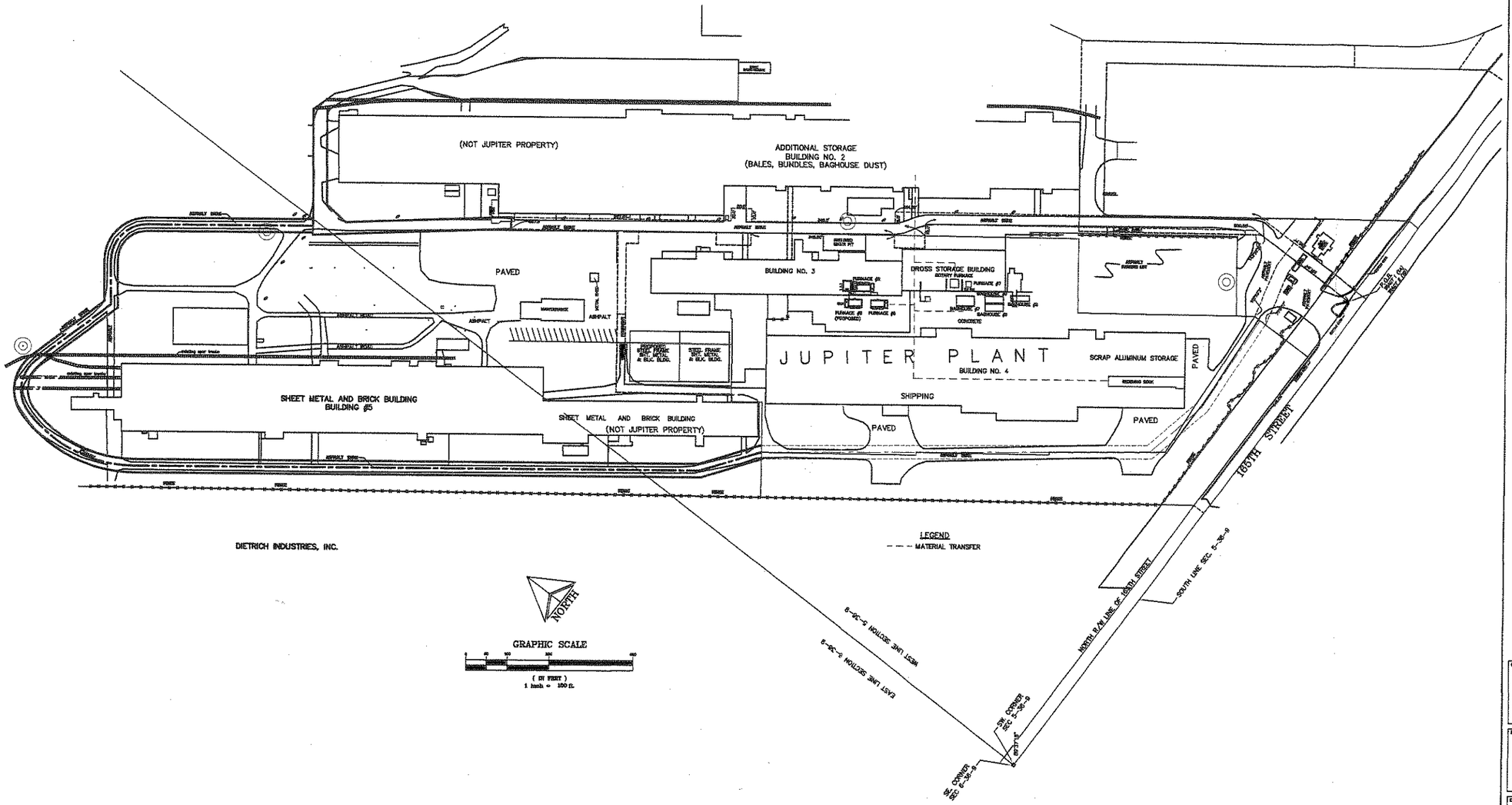

PRELIMINARY
NOT FOR CONSTRUCTION

ENGINEERS
ENGINEERING FOR INDUSTRY

1700 WILSON ROAD
PHONE: (610) 926-3076

BLUE BELL, PA 19422
FAX: (610) 825-7942

REV.	DATE	DESCRIPTION	BY	APP
—		—		

NOTE:
THE CONTRACTOR SHALL FIELD VERIFY ALL DIMENSIONS AND EXISTING CONDITIONS PRIOR TO PROCEEDING WITH ANY WORK. WHERE DISCREPANCIES OCCUR BETWEEN THESE DOCUMENTS AND EXISTING CONDITIONS, THE DISCREPANCY SHALL BE REPORTED TO THE OWNER AND/OR ENGINEER FOR EXPEDITING AND RESOLUTION.

CLIENT
JUPITER ALUMINUM
HAMMOND, IN

PROJECT TITLE
FUGITIVE PARTICULATE EMISSION PLAN

DRAWING TITLE
FACILITY PLAN

LAST UPDATE: 7-17-07	ENGINEER: MM	ESI CONTRACT No.: EHS07691.02
DATE: 7-12-07	DESIGNER: DS	CADD FILE No.: 6912C100
SCALE: 1"=100'-0"	DRAWN: DS	REF FILE(S): —

REVISED DRAWING

DRAWING NUMBER:
C100

REVISION LEVEL:
—

ATTACHMENT 2

RECORDKEEPING FORMS

JUPITER ALUMINUM, HAMMOND, INDIANA
FUGITIVE PARTICULATE MATTER
LOG OF INCIDENTS WHEN CONTROL MEASURES WHERE NOT USED

Date	Incident	Explanation

MAINTAIN RECORDS FOR 3 YEARS

QUARTERLY REPORT

LIST OF FUGITIVE PARTICULATE MATTER CONTROL MEASURES THAT WERE NOT IMPLEMENTED

Facility: Jupiter Aluminum, Hammond, Indiana
For Quarter Ending: ☐ March 31 ☐ June 30 ☐ September 30 ☐ December 31
For Year: _____

Date	Control Measure	Reason	Corrective Action

MAINTAIN RECORDS FOR 3 YEARS. SUBMIT TO IDEM AND HDEM WITHIN 30 DAYS FOLLOWING END OF EACH QUARTER.

INDIANA DEPARTMENT OF ENVIRONMENTAL MANAGEMENT

We Protect Hoosiers and Our Environment.

Mitchell E. Daniels Jr.
Governor

Thomas W. Easterly
Commissioner

100 North Senate Avenue
Indianapolis, Indiana 46204
(317) 232-8603
Toll Free (800) 451-6027
www.idem.IN.gov

SENT VIA U.S. MAIL: CONFIRMED DELIVERY AND SIGNATURE REQUESTED

TO: Mark Volkmann
Jupiter Aluminum Corporation
1745 165th St
Hammond, IN 46320

DATE: April 12, 2012

FROM: Matt Stuckey, Branch Chief
Permits Branch
Office of Air Quality

SUBJECT: Final Decision
Title V
089-31369-00201

Enclosed is the final decision and supporting materials for the air permit application referenced above. Please note that this packet contains the original, signed, permit documents.

The final decision is being sent to you because our records indicate that you are the contact person for this application. However, if you are not the appropriate person within your company to receive this document, please forward it to the correct person.

A copy of the final decision and supporting materials has also been sent via standard mail to:
OAQ Permits Branch Interested Parties List

If you have technical questions regarding the enclosed documents, please contact the Office of Air Quality, Permits Branch at (317) 233-0178, or toll-free at 1-800-451-6027 (ext. 3-0178), and ask to speak to the permit reviewer who prepared the permit. If you think you have received this document in error, please contact Joanne Smiddie-Brush of my staff at 1-800-451-6027 (ext 3-0185), or via e-mail at jbrush@idem.IN.gov.

Final Applicant Cover letter.dot 11/30/07

INDIANA DEPARTMENT OF ENVIRONMENTAL MANAGEMENT
We Protect Hoosiers and Our Environment.

Mitchell E. Daniels Jr.
Governor

Thomas W. Easterly
Commissioner

100 North Senate Avenue
Indianapolis, Indiana 46204
(317) 232-8603
Toll Free (800) 451-6027
www.idem.IN.gov

April 12, 2012

TO: Hammond Public Library

From: Matthew Stuckey, Branch Chief
Permits Branch
Office of Air Quality

Subject: **Important Information for Display Regarding a Final Determination**

Applicant Name: Jupiter Aluminum Corporation
Permit Number: 089-31369-00201

You previously received information to make available to the public during the public comment period of a draft permit. Enclosed is a copy of the final decision and supporting materials for the same project. Please place the enclosed information along with the information you previously received. To ensure that your patrons have ample opportunity to review the enclosed permit, **we ask that you retain this document for at least 60 days.**

The applicant is responsible for placing a copy of the application in your library. If the permit application is not on file, or if you have any questions concerning this public review process, please contact Joanne Smiddie-Brush, OAQ Permits Administration Section at 1-800-451-6027, extension 3-0185.

Enclosures
Final Library.dot 11/30/07

INDIANA DEPARTMENT OF ENVIRONMENTAL MANAGEMENT
We Protect Hoosiers and Our Environment.

Mitchell E. Daniels Jr.
Governor

Thomas W. Easterly
Commissioner

100 North Senate Avenue
Indianapolis, Indiana 46204
(317) 232-8603
Toll Free (800) 451-6027
www.idem.IN.gov

TO: Interested Parties / Applicant

DATE: April 12, 2012

RE: Jupiter Aluminum Corporation / 089-31369-00201

FROM: Matthew Stuckey, Branch Chief
Permits Branch
Office of Air Quality

In order to conserve paper and reduce postage costs, IDEM's Office of Air Quality is now sending many permit decisions on CDs in Adobe PDF format. The enclosed CD contains information regarding the company named above.

This permit is also available on the IDEM website at:
http://www.in.gov/ai/appfiles/idem-caats/

If you would like to request a paper copy of the permit document, please contact IDEM's central file room at:

Indiana Government Center North, Room 1201
100 North Senate Avenue, MC 50-07
Indianapolis, IN 46204
Phone: 1-800-451-6027 (ext. 4-0965)
Fax (317) 232-8659

Please Note: *If you feel you have received this information in error, or would like to be removed from the Air Permits mailing list, please contact Patricia Pear with the Air Permits Administration Section at 1-800-451-6027, ext. 3-6875 or via e-mail at PPEAR@IDEM.IN.GOV.*

Enclosures
CD Memo.dot 11/14/08

Mail Code 61-53

IDEM Staff	CDENNY 4/12/2012 Jupiter Aluminum Corporation 089-31369-00021 (final)			AFFIX STAMP HERE IF USED AS CERTIFICATE OF MAILING
Name and address of Sender	▶	Indiana Department of Environmental Management Office of Air Quality – Permits Branch 100 N. Senate Indianapolis, IN 46204	Type of Mail: **CERTIFICATE OF MAILING ONLY**	

Line	Article Number	Name, Address, Street and Post Office Address	Postage	Handing Charges	Act. Value (If Registered)	Insured Value	Due Send if COD	R.R. Fee	S.D. Fee	S.H. Fee	Rest. Del. Fee Remarks
1		Mark Volkmann Jupiter Aluminum Corporation 1745 165th St Hammond IN 46320 (Source CAATS)									
2		Bill Altgibers Plant Mgr Jupiter Aluminum Corporation 1745 165th St Hammond IN 46320 *(RO CAATS)*									
3		East Chicago City Council 4525 Indianapolis Blvd East Chicago IN 46312 *(Local Official)*									
4		Gary - Hobart Water Corp 650 Madison St, P.O. Box M486 Gary IN 46401-0486 *(Affected Party)*									
5		Lake County Health Department-Gary 1145 W. 5th Ave Gary IN 46402-1795 *(Health Department)*									
6		WJOB / WZVN Radio 6405 Olcott Ave Hammond IN 46320 *(Affected Party)*									
7		Hammond City Council and Mayors Office 5925 Calumet Avenue Hammond IN 46320 *(Local Official)*									
8		Hammond Public Library 564 State St Hammond IN 46320-1532 *(Library)*									
9		Laurence A. McHugh Barnes & Thornburg 100 North Michigan South Bend IN 46601-1632 *(Affected Party)*									
10		Shawn Sobocinski 3229 E. Atlanta Court Portage IN 46368 *(Affected Party)*									
11		Ms. Carolyn Marsh Lake Michigan Calumet Advisory Council 1804 Oliver St Whiting IN 46394-1725 *(Affected Party)*									
12		Mark Coleman 107 Diana Road Portage IN 46368 *(Affected Party)*									
13		Mr. Chris Hernandez Pipefitters Association, Local Union 597 8762 Louisiana St., Suite G Merrillville IN 46410 (Affected Party)									
14		Craig Hogarth 7901 West Morris Street Indianapolis IN 46231 *(Affected Party)*									
15		Lake County Commissioners 2293 N. Main St, Building A 3rd Floor Crown Point IN 46307 *(Local Official)*									

Total number of pieces Listed by Sender	Total number of Pieces Received at Post Office	Postmaster, Per (Name of Receiving employee)	The full declaration of value is required on all domestic and international registered mail. The maximum indemnity payable for the reconstruction of nonnegotiable documents under Express Mail document reconstructing insurance is $50,000 per piece subject to a limit of $50, 000 per occurrence. The maximum indemnity payable on Express mil merchandise insurance is $500. The maximum indemnity payable is $25,000 for registered mail, sent with optional postal insurance. See ***Domestic Mail Manual*** **R900, S913**, and **S921** for limitations of coverage on inured and COD mail. See ***International Mail Manual*** for limitations o coverage on international mail. Special handling charges apply only to Standard Mail (A) and Standard Mail (B) parcels.

FACSIMILIE OF PS Form 3877

Mail Code 61-53

IDEM Staff	CDENNY 4/12/2012 Jupiter Aluminum Corporation 089-31369-00021 (final)			AFFIX STAMP HERE IF USED AS CERTIFICATE OF MAILING
Name and address of Sender	▶	Indiana Department of Environmental Management Office of Air Quality – Permits Branch 100 N. Senate Indianapolis, IN 46204	Type of Mail: **CERTIFICATE OF MAILING ONLY**	

Line	Article Number	Name, Address, Street and Post Office Address	Postage	Handing Charges	Act. Value (If Registered)	Insured Value	Due Send if COD	R.R. Fee	S.D. Fee	S.H. Fee	Rest. Del. Fee Remarks
1		Anthony 2006 E. 140th Street East Chicago IN 46312 (Affected Party)									
2		Barbara G. Perez 506 Lilac Street East Chicago IN 46312 *(Affected Party)*									
3		Mr. Robert Garcia 3733 Parrish Avenue East Chicago IN 46312 *(Affected Party)*									
4		Ms. Karen Kroczek 8212 Madison Ave Munster IN 46321-1627 *(Affected Party)*									
5		Joseph Hero 11723 S Oakridge Drive St. John IN 46373 *(Affected Party)*									
6		Gary City Council 401 Broadway # 209 Gary IN 46402 *(Local Official)*									
7		Ron Novak Hammond Dept. of Environmental Management 5925 Calumnet Ave. Hammond IN 46320 *(Local Official)*									
8		Mr. Larry Davis 268 South, 600 West Hebron IN 46341 *(Affected Party)*									
9		Gitte Laasby Post Tribune 1433 E. 83rd Ave Merrillville IN 46410 *(Affected Party)*									
10		Susan Severtson City of Gary Law Dept. 401 Broadway 4th Floor Gary IN 46402 *(Local Official)*									
11		Ms. Marjorie J Fitzpatrick IES Engineers 1720 Walton Rd Blue Bell PA 19422 *(Consultant)*									
12											
13											
14											
15											

Total number of pieces Listed by Sender	Total number of Pieces Received at Post Office	Postmaster, Per (Name of Receiving employee)	The full declaration of value is required on all domestic and international registered mail. The maximum indemnity payable for the reconstruction of nonnegotiable documents under Express Mail document reconstructing insurance is $50,000 per piece subject to a limit of $50, 000 per occurrence. The maximum indemnity payable on Express mil merchandise insurance is $500. The maximum indemnity payable is $25,000 for registered mail, sent with optional postal insurance. See ***Domestic Mail Manual*** **R900, S913**, and **S921** for limitations of coverage on inured and COD mail. See ***International Mail Manual*** for limitations o coverage on international mail. Special handling charges apply only to Standard Mail (A) and Standard Mail (B) parcels.

FACSIMILIE OF PS Form 3877