INDIANA DEPARTMENT OF ENVIRONMENTAL MANAGEMENT
We Protect Hoosiers and Our Environment.

Michael R. Pence
Governor

Thomas W. Easterly
Commissioner

100 North Senate Avenue
Indianapolis, Indiana 46204
(317) 232-8603
Toll Free (800) 451-6027
www.idem.IN.gov

TO: Interested Parties / Applicant

DATE: March 27, 2013

RE: Eli Lilly and Company, Lilly Technology Center / 097 - 32466 - 00072

FROM: Matthew Stuckey, Branch Chief
Permits Branch
Office of Air Quality

Notice of Decision: Approval – Effective Immediately

Please be advised that on behalf of the Commissioner of the Department of Environmental Management, I have issued a decision regarding the enclosed matter. Pursuant to IC 13-17-3-4 and 326 IAC 2, this permit modification is effective immediately, unless a petition for stay of effectiveness is filed and granted, and may be revoked or modified in accordance with the provisions of IC 13-15-7-1.

If you wish to challenge this decision, IC 4-21.5-3-7 and IC 13-15-7-3 require that you file a petition for administrative review. This petition may include a request for stay of effectiveness and must be submitted to the Office Environmental Adjudication, 100 North Senate Avenue, Government Center North, Suite N 501E, Indianapolis, IN 46204, **within eighteen (18) days of the mailing of this notice**. The filing of a petition for administrative review is complete on the earliest of the following dates that apply to the filing:

(1) the date the document is delivered to the Office of Environmental Adjudication (OEA);
(2) the date of the postmark on the envelope containing the document, if the document is mailed to OEA by U.S. mail; or
(3) The date on which the document is deposited with a private carrier, as shown by receipt issued by the carrier, if the document is sent to the OEA by private carrier.

The petition must include facts demonstrating that you are either the applicant, a person aggrieved or adversely affected by the decision or otherwise entitled to review by law. Please identify the permit, decision, or other order for which you seek review by permit number, name of the applicant, location, date of this notice and all of the following:

(1) the name and address of the person making the request;
(2) the interest of the person making the request;
(3) identification of any persons represented by the person making the request;
(4) the reasons, with particularity, for the request;
(5) the issues, with particularity, proposed for considerations at any hearing; and
(6) identification of the terms and conditions which, in the judgment of the person making the request, would be appropriate in the case in question to satisfy the requirements of the law governing documents of the type issued by the Commissioner.

Recycled Paper An Equal Opportunity Employer *Please Recycle*

Pursuant to 326 IAC 2-7-18(d), any person may petition the U.S. EPA to object to the issuance of a Title V operating permit or modification within sixty (60) days of the end of the forty-five (45) day EPA review period. Such an objection must be based only on issues that were raised with reasonable specificity during the public comment period, unless the petitioner demonstrates that it was impractible to raise such issues, or if the grounds for such objection arose after the comment period.

To petition the U.S. EPA to object to the issuance of a Title V operating permit, contact:

U.S. Environmental Protection Agency
401 M Street
Washington, D.C. 20406

If you have technical questions regarding the enclosed documents, please contact the Office of Air Quality, Permits Branch at (317) 233-0178. Callers from within Indiana may call toll-free at 1-800-451-6027, ext. 3-0178.

Enclosures
FNTV-PMOD.doc 3/27/08

INDIANA DEPARTMENT OF ENVIRONMENTAL MANAGEMENT

We Protect Hoosiers and Our Environment.

Michael R. Pence
Governor

Thomas W. Easterly
Commissioner

100 North Senate Avenue
Indianapolis, Indiana 46204
(317) 232-8603
Toll Free (800) 451-6027
www.idem.IN.gov

Ms. Catherine Ehlhardt
Consultant, Health, Safety and Environmental
Eli Lilly and Company
Lilly Technology Center
Indianapolis, IN 46285

March 27, 2013

Re: 097-32466-00072
Significant Permit Modification to
Part 70 Renewal No.: T 097-30149-00072

Dear Ms. Ehlhardt:

Eli Lilly and Company was issued a Part 70 Operating Permit Renewal on June 13, 2011 for a stationary pharmaceutical manufacturing and research and development facility. An application requesting changes to this permit was received on July 31, 2012 and supplemented on December 14, 2012. Also, an application was received on October 30, 2012. Since the two applications were for the same source and could be done through one permit, the two applications were combined on December 18, 2012. Pursuant to the provisions of 326 IAC 2-7-12 a significant permit modification to this permit is hereby approved as described in the attached Technical Support Document.

The modification consists of adding a spark ignition, natural gas fired emergency generator rated at approximately 383 horsepower at building 359 and the addition of a compression ignition, diesel fired reciprocating engine, name plate rated at 324 horsepower emergency generator at B314. Also, the modification consists of the following:

1. Adding the requirements of 326 IAC 8-5-3 to Building 130 complex
2. Revise Conditions D.4.1 and D.4.2
3. Revise Condition D.4.4 (b)
4. Update the CFR reference date in Attachments A through F of the permit

All other conditions of the permit shall remain unchanged and in effect. For your convenience, the entire Part 70 Operating Permit as modified will be provided at issuance.

This decision is subject to the Indiana Administrative Orders and Procedures Act – IC 4-21.5-3-5. If you have any questions on this matter, please contact Ghassan Shalabi, OAQ, 100 North Senate Avenue, MC 61-53, Room 1003, Indianapolis, Indiana, 46204-2251, or call at (800) 451-6027, and ask for Ghassan Shalabi or extension (4-5378), or dial (317) 233-5378.

Sincerely,

Tripurari Sinha

Tripurari P. Sinha, Ph. D., Section Chief
Permits Branch
Office of Air Quality

Attachments:
Updated Permit
Technical Support Document
PTE Calculations

GS

cc: File – Marion County
Marion County Health Department
U.S. EPA, Region V

W. Darin Moody
Eli Lilly and Company
Lilly Corporate Centre
Indianapolis, IN 46285

INDIANA DEPARTMENT OF ENVIRONMENTAL MANAGEMENT
We Protect Hoosiers and Our Environment.

Michael R. Pence
Governor

Thomas W. Easterly
Commissioner

100 North Senate Avenue
Indianapolis, Indiana 46204
(317) 232-8603
Toll Free (800) 451-6027
www.idem.IN.gov

Part 70 Operating Permit Renewal
OFFICE OF AIR QUALITY

Eli Lilly and Company, Lilly Technology Center
1555 South Harding Street
Indianapolis, Indiana 46168

(herein known as the Permittee) is hereby authorized to construct and operate subject to the conditions contained herein, the source described in Section A (Source Summary) of this permit.

The Permittee must comply with all conditions of this permit. Noncompliance with any provisions of this permit is grounds for enforcement action; permit termination, revocation and reissuance, or modification; or denial of a permit renewal application. Noncompliance with any provision of this permit, except any provision specifically designated as not federally enforceable, constitutes a violation of the Clean Air Act. It shall not be a defense for the Permittee in an enforcement action that it would have been necessary to halt or reduce the permitted activity in order to maintain compliance with the conditions of this permit. An emergency does constitute an affirmative defense in an enforcement action provided the Permittee complies with the applicable requirements set forth in Section B, Emergency Provisions.

This permit is issued in accordance with 326 IAC 2 and 40 CFR Part 70 Appendix A and contains the conditions and provisions specified in 326 IAC 2-7 as required by 42 U.S.C. 7401, et. seq. (Clean Air Act as amended by the 1990 Clean Air Act Amendments), 40 CFR Part 70.6, IC 13-15 and IC 13-17.

Operation Permit No.: T097-30149-00072	
Issued by: Tripurari P. Sinha, Ph. D., Section Chief Permits Branch Office of Air Quality	Issuance Date: June 13, 2011 Expiration Date: June 13, 2016

First Significant Permit Modification No.: T097-32466-00072	
Issued by: Tripurari Sinha Tripurari P. Sinha, Ph. D., Section Chief Permits Branch Office of Air Quality	Issuance Date: March 27, 2013 Expiration Date: June 13, 2016

TABLE OF CONTENTS

A. SOURCE SUMMARY

A.1 General Information [326 IAC 2-7-4(c)][326 IAC 2-7-5(15)][326 IAC 2-7-1(22)]
A.2 Emission Units and Pollution Control Equipment Summary [326 IAC 2-7-4(c)(3)] [326 IAC 2-7-5(15)]
A.3 Specifically Regulated Insignificant Activities [326 IAC 2-7-1(21)][326 IAC 2-7-4(c)] [326 IAC 2-7-5(15)]
A.4 Insignificant Activities [326 IAC 2-7-1(21)][326 IAC 2-7-4(c)]
A.5 Part 70 Permit Applicability [326 IAC 2-7-2]

B. GENERAL CONDITIONS

B.1 Definitions [326 IAC 2-7-1]
B.2 Permit Term [326 IAC 2-7-5(2)][326 IAC 2-1.1-9.5][326 IAC 2-7-4(a)(1)(D)] [IC 13-15-3-6(a)]
B.3 Term of Conditions [326 IAC 2-1.1-9.5]
B.4 Enforceability [326 IAC 2-7-7] [IC 13-17-12]
B.5 Severability [326 IAC 2-7-5(5)]
B.6 Property Rights or Exclusive Privilege [326 IAC 2-7-5(6)(D)]
B.7 Duty to Provide Information [326 IAC 2-7-5(6)(E)]
B.8 Certification [326 IAC 2-7-4(f)][326 IAC 2-7-6(1)][326 IAC 2-7-5(3)(C)]
B.9 Annual Compliance Certification [326 IAC 2-7-6(5)]
B.10 Preventive Maintenance Plan [326 IAC 2-7-5(1),(3) and (13)][326 IAC 2-7-6(1) and (6)] [326 IAC 1-6-3]
B.11 Emergency Provisions [326 IAC 2-7-16]
B.12 Permit Shield [326 IAC 2-7-15][326 IAC 2-7-20][326 IAC 2-7-12]
B.13 Prior Permits Superseded [326 IAC 2-1.1-9.5][326 IAC 2-7-10.5]
B.14 Termination of Right to Operate [326 IAC 2-7-10][326 IAC 2-7-4(a)]
B.15 Permit Modification, Reopening, Revocation and Reissuance, or Termination [326 IAC 2-7-5(6)(C)][326 IAC 2-7-8(a)][326 IAC 2-7-9]
B.16 Permit Renewal [326 IAC 2-7-3][326 IAC 2-7-4][326 IAC 2-7-8(e)]
B.17 Permit Amendment or Modification [326 IAC 2-7-11][326 IAC 2-7-12] [40 CFR 72]
B.18 Permit Revision Under Economic Incentives and Other Programs [326 IAC 2-7-5(8)] [326 IAC 2-7-12(b)(2)]
B.19 Operational Flexibility [326 IAC 2-7-20][326 IAC 2-7-10.5]
B.20 Source Modification Requirement [326 IAC 2-7-10.5]
B.21 Inspection and Entry [326 IAC 2-7-6][IC 13-14-2-2][IC 13-30-3-1][IC 13-17-3-2]
B.22 Transfer of Ownership or Operational Control [326 IAC 2-7-11]
B.23 Annual Fee Payment [326 IAC 2-7-19] [326 IAC 2-7-5(7)][326 IAC 2-1.1-7]
B.24 Credible Evidence [326 IAC 2-7-5(3)][326 IAC 2-7-6][62 FR 8314] [326 IAC 1-1-6]

C. SOURCE OPERATION CONDITIONS

Emission Limitations and Standards [326 IAC 2-7-5(1)]

C.1 Particulate Emission Limitations For Processes with Process Weight Rates Less Than One Hundred (100) Pounds per Hour [326 IAC 6-3-2]
C.2 Opacity [326 IAC 5-1]
C.3 Open Burning [326 IAC 4-1] [IC 13-17-9]
C.4 Incineration [326 IAC 4-2] [326 IAC 9-1-2]

C.5 Fugitive Dust Emissions [326 IAC 6-4]
C.6 Asbestos Abatement Projects [326 IAC 14-10] [326 IAC 18] [40 CFR 61, Subpart M]

Testing Requirements [326 IAC 2-7-6(1)]
C.7 Performance Testing [326 IAC 3-6]

Compliance Requirements [326 IAC 2-1.1-11]
C.8 Compliance Requirements [326 IAC 2-1.1-11]

Compliance Monitoring Requirements [326 IAC 2-7-5(1)][326 IAC 2-7-6(1)]
C.9 Compliance Monitoring [326 IAC 2-7-5(3)][326 IAC 2-7-6(1)]
C.10 Monitoring Methods [326 IAC 3][40 CFR 60][40 CFR 63]
C.11 Instrument Specifications [326 IAC 2-1.1-11] [326 IAC 2-7-5(3)] [326 IAC 2-7-6(1)]

Corrective Actions and Response Steps [326 IAC 2-7-5][326 IAC 2-7-6]
C.12 Emergency Reduction Plans [326 IAC 1-5-2] [326 IAC 1-5-3]
C.13 Risk Management Plan [326 IAC 2-7-5(12)] [40 CFR 68]
C.14 Response to Abnormal or Out-of-Range Compliance Monitoring Measurements [326 IAC 2-7-5] [326 IAC 2-7-6]
C.15 Actions Related to Noncompliance Demonstrated by a Stack Test [326 IAC 2-7-5] [326 IAC 2-7-6]

Record Keeping and Reporting Requirements [326 IAC 2-7-5(3)] [326 IAC 2-7-19]
C.16 Emission Statement [326 IAC 2-7-5(3)(C)(iii)][326 IAC 2-7-5(7)][326 IAC 2-7-19(c)] [326 IAC 2-6]
C.17 General Record Keeping Requirements [326 IAC 2-7-5(3)] [326 IAC 2-7-6] [326 IAC 2-2] [326 IAC 2-3]
C.18 General Reporting Requirements [326 IAC 2-7-5(3)(C)] [326 IAC 2-1.1-11] [326 IAC 2-2]

Stratospheric Ozone Protection
C.19 Compliance with 40 CFR 82 and 326 IAC 22-1

D.1. EMISSIONS UNIT OPERATION CONDITIONS
Emission Limitations and Standards [326 IAC 2-7-5(1)]

D.1.1 Synthesized Pharmaceutical Manufacturing Operations [326 IAC 8-1-5][326 IAC 8-5-3]
D.1.2 Advance Approval of Modification [326 IAC 2-7-5(15)]
Compliance Determination Requirements

D.1.3 Volatile Organic Compounds (VOC)

Compliance Monitoring Requirements [326 IAC 2-7-5(1)][326 IAC 2-7-6(1)]

D.1.4 Synthesized Pharmaceutical Manufacturing Operations [326 IAC 8-5-3]
D.1.5 Instrument Specifications [326 IAC 2-1.1-11][326 IAC 2-7-5(3)][326 IAC 2-7-6(1)]

Record Keeping and Reporting Requirements [326 IAC 2-7-5(3)] [326 IAC 2-7-19]

D.1.6 Record Keeping Requirements
D.1.7 Reporting Requirements

D.2. EMISSIONS UNIT OPERATION CONDITIONS

Emission Limitations and Standards [326 IAC 2-7-5(1)]

D.2.1 Volatile Organic Compounds (VOC) [326 IAC 8-1-6]
D.2.2 LDAR [326 IAC 8-1-6][CP-960073-01]
D.2.3 Synthesized Pharmaceutical Manufacturing Operations [326 IAC 8-5-3]
D.2.4 Preventive Maintenance Plan [326 IAC 2-7-5(13)]

Compliance Determination Requirements

D.2.5 Volatile Organic Compounds (VOC)

D.3. EMISSIONS UNIT OPERATION CONDITIONS

Emission Limitations and Standards [326 IAC 2-7-5(1)]

D.3.1 Advance Approval of Modification [326 IAC 2-7-5(15)]
D.3.2 Synthesized Pharmaceutical Manufacturing Operations [326 IAC 8-5-3]

D.4. EMISSIONS UNIT OPERATION CONDITIONS

Emission Limitations and Standards [326 IAC 2-7-5(1)]

D.4.1 Prevention of Significant Deterioration (PSD) Minor Limit [326 IAC 2-2][40 CFR 52.21]
D.4.2 Leak Detection and Repair [326 IAC 2-2][40 CFR 52.21][40 CFR 63 Subpart GGG]
D.4.3 Particulate Emission Limitation for Manufacturing Processes [326 IAC 6-3-2]
D.4.4 Synthesized Pharmaceutical Manufacturing Operations [326 IAC 8-5-3]
D.4.5 Advance Approval of Modification [326 IAC 2-7-5(15)]
D.4.6 Preventive Maintenance Plan [326 IAC 2-7-5(13)]

Compliance Determination Requirements

D.4.7 Volatile Organic Compounds (VOC)

Compliance Monitoring Requirements [326 IAC 2-7-5(1)][326 IAC 2-7-6(1)]

D.4.8 Synthesized Pharmaceutical Manufacturing Operations [326 IAC 8-5-3]
D.4.9 Instrument Specifications [326 IAC 2-1.1-11][326 IAC 2-7-5(3)][326 IAC 2-7-6(1)]

Record Keeping and Reporting Requirements [326 IAC 2-7-5(3)] [326 IAC 2-7-19]

D.4.10 Record Keeping Requirements
D.4.11 Reporting Requirements

D.5. EMISSIONS UNIT OPERATION CONDITIONS

Emission Limitations and Standards [326 IAC 2-7-5(1)]

D.5.1 Particulate Emission Limitation for Manufacturing Processes [326 IAC 6-3-2]
D.5.2 Synthesized Pharmaceutical Manufacturing Operations [326 IAC 8-5-3]
D.5.3 Advance Approval of Modification [326 IAC 2-7-5(15)]

D.6. EMISSIONS UNIT OPERATION CONDITIONS
Emission Limitations and Standards [326 IAC 2-7-5(1)]

D.6.1 Architectural and Industrial Maintenance (AIM) [326 IAC 8-14]
D.6.2 Work Practices [326 IAC 8-14-3]

Record Keeping and Reporting Requirements [326 IAC 2-7-5(3)] [326 IAC 2-7-19]
D.6.3 Record Keeping Requirements

D.7. EMISSIONS UNIT OPERATION CONDITIONS
Emission Limitations and Standards [326 IAC 2-7-5(1)]

D.7.1 Volatile Organic Compounds (VOC) [326 IAC 8-3-2]
D.7.2 Volatile Organic Compounds (VOC) (Cold Cleaner Degreaser Operation and Control) [326 IAC 8-5-3]
D.7.3 Advance Approval of Modification [326 IAC 2-7-5(15)]

E.1. EMISSIONS UNIT OPERATION CONDITIONS
National Emission Standard for Hazardous Air Pollutants [40 CFR 63]
E.1.1 General Provisions Relating to National Emissions Standard for Hazardous Air Pollutants under 40 CFR 63 [326 IAC 20-1][40 CFR Part 63,Subpart A]
E.1.2 Provisions Relating to National Emissions Standard for Hazardous Air Pollutants for Stationary Reciprocating Internal Combustion Engines [326 IAC 20-82-1][40 CFR Part 63, Subpart ZZZZ]
E.1.3 Advance Approval of Modification [326 IAC 2-7-5(15)]

E.2. EMISSIONS UNIT OPERATION CONDITIONS
New Source Performance Standards [40 CFR Part 60]

E.2.1 General Provisions Relating to NSPS IIII [326 IAC 12] [40 CFR Part 60, Subpart A]

E.2.2 Standards of Performance for Stationary Compression Ignition Internal Combustion Engines [326 IAC 12] [40 CFR Part 60, Subpart IIII]

E.2.3 Advance Approval of Modification [326 IAC 2-7-5(15)]

E.3. EMISSIONS UNIT OPERATION CONDITIONS
National Emission Standard for Hazardous Air Pollutants [40 CFR 63]

E.3.1 General Provisions Relating to HAPs [326 IAC 20-1-1][40 CFR 63, Subpart A]
E.3.2 National Emissions Standard for Hazardous Air Pollutants for Pharmaceutical Production [326 IAC 20-57][40 CFR Part 63, Subpart GGG]
E.3.3 National Emissions Standard for Hazardous Air Pollutants for Pharmaceutical Production - Leak Detection and Repair [326 IAC 20-57][40 CFR Part 63, Subpart GGG]

E.4. EMISSIONS UNIT OPERATION CONDITIONS
National Emission Standard for Hazardous Air Pollutants [40 CFR 61]
E.4.1 National Emissions Standard for Equipment Leaks (Fugitive Emisson Sources) [326 IAC 14-8][40 CFR Part 61, Subpart V]

E.5. EMISSIONS UNIT OPERATION CONDITIONS

National Emission Standard for Hazardous Air Pollutants [40 CFR 63]

E.5.1 General Provisions Relating to HAPs [326 IAC 20-1-1][40 CFR 63, Subpart A]

E.5.2 National Emissions Standard for Hazardous Air Pollutants: Site Remediation [326 IAC 20-87][40 CFR Part 63, Subpart GGGGG]

E.6. EMISSIONS UNIT OPERATION CONDITIONS

National Emission Standard for Hazardous Air Pollutants [40 CFR 63]

E.6.1 General Provisions Relating to HAPs [326 IAC 14-1-1][40 CFR 61, Subpart A]

E.6.2 National Emissions Standard for Benzene Waste Operations [40 CFR Part 61, Subpart FF]

E.7. EMISSIONS UNIT OPERATION CONDITIONS

New Source Performance Standards (NSPS) Requirements [326 IAC 12-1]

E.6.1 General Provisions Relating to NSPS [326 IAC 12-1][40 CFR 60, Subpart A]

E.6.2 Standards of Performance for Stationary Spark Ignition Internal Combustion Engines [40 CFR Part 60, Subpart JJJJ] [326 IAC 12]

Certification
Emergency Occurrence Report
Part 70 Quarterly Report
Quarterly Deviation and Compliance Monitoring Report

Attachment A: 40 CFR Part 63, Subpart ZZZZ
Attachment B: 40 CFR Part 60, Subpart IIII
Attachment C: 40 CFR Part 63, Subpart GGG
Attachment D: 40 CFR Part 61, Subpart V
Attachment E: 40 CFR Part 63, Subpart GGGGG
Attachment F: 40 CFR Part 61, Subpart FF
Attachment G: 40 CFR Part 60, Subpart JJJJ

SECTION A SOURCE SUMMARY

This permit is based on information requested by the Indiana Department of Environmental Management (IDEM), Office of Air Quality (OAQ). The information describing the source contained in conditions A.1 through A.3 is descriptive information and does not constitute enforceable conditions. However, the Permittee should be aware that a physical change or a change in the method of operation that may render this descriptive information obsolete or inaccurate may trigger requirements for the Permittee to obtain additional permits or seek modification of this permit pursuant to 326 IAC 2, or change other applicable requirements presented in the permit application.

A.1 General Information [326 IAC 2-7-4(c)][326 IAC 2-7-5(14)][326 IAC 2-7-1(22)]

The Permittee owns and operates a stationary pharmaceutical manufacturing and research and development facility.

Source Address:	1555 South Harding Street, Indianapolis, Indiana 46168
General Source Phone Number:	(317) 2762000 (source number) (317)-277-6282 (Manager of Environmental)
SIC Code:	2833, 2834
County Location:	Marion
Source Location Status:	Nonattainment for PM2.5 standard Attainment for all other criteria pollutants
Source Status:	Part 70 Operating Permit Program Major Source, under PSD Rules Minor Source under Nonattainment NSR Major Source, Section 112 of the Clean Air Act 1 of 28 Source Categories

A.2 Emission Units and Pollution Control Equipment Summary [326 IAC 2-7-4(c)(3)] [326 IAC 2-7-5(14)]

This stationary source consists of the following emission units and pollution control devices:

(a) A chemical development pilot plant facility and laboratories (identified as Building 110) used to develop new chemical processes and to produce new pharmaceutical compounds for subsequent use in toxicology studies and clinical trial research, with Modules A, B, C, D, E, 30 gallon A, 30 gallon B, Solids Containment and C-wing, and with process condensers.

(b) Manufacture of bulk pharmaceutical products (Building 358) by:

(1) protein isolation with a carbon adsorber for VOC and HAP control with laboratory support;
(2) chemical synthesis,

units subject to BACT [326 IAC 8-1-6].

(c) Manufacture of bulk pharmaceutical products (Building 358) by:

(1) protein isolation with laboratory support;
(2) chemical synthesis, or non-synthesized chemical processes;

units not subject to BACT [326 IAC 8-1-6].

(d) The BHI area consists of five buildings (building 132, 133, 134, 142 and 138) where manufacturing of bulk pharmaceutical products through chemical synthesis takes place using condensers and a scrubber as VOC control.

(e) Building 130 Complex (buildings 130, 135 and 136) consisting of laboratories and manufacturing of bulk pharmaceutical products through chemical synthesis.

(f) Building 333 area consisting of laboratories and fermentation of bulk pharmaceutical products.

(g) Emergency Generators and fire pumps including, but not limited to, those below:

Bldg.	Name & if Fire Pump	Manufacturer/ Model	Nominal Capacity	Units	Fuel	CI or SI	Date/Year Installed or Mfd.	NSPS New; Meet 60.4204	RICE MACT
B 134	B 134	Cummins 100DGDBL36 421A	166	HP	No.2 oil	CI	1991	No; N/A	Existing
B152	B 152	Cummins 800DFJB	1200	HP	No.2 oil	CI	Before 2002	No; N/A	Existing
B 185	B185 Fire Pump #1	Caterpillar 3406B DI	375	HP	No.2 oil	CI	1990	No; N/A	Existing
B 185	B185 Fire Pump #2	Caterpillar 3406B DI	375	HP	No.2 oil	CI	1990	No; N/A	Existing
B 314	B314	Cummins 200DFAA	380	HP	No.2 oil	CI	1997	No; N/A	Existing
B 314	B314 Unit 2	Cummins 200DSGAE	324	HP	No.2 oil	CI	2013	Yes; Yes	New
B 360	B 360	Cummins 60CSFAD	145	HP	No.2 oil	CI	2011	Yes; Yes	New
B 180	B 180	Cummins DGDB-4476255	155	HP	No.2 oil	CI	2007 (manufactured 2000)	No; N/A	Existing
B 359	B 359 Fire House	GM Gaseous Engine 3 L 4 cylinder	20	KW	Natural Gas	SI	2006	No; N/A	Existing
B 359	B 359 Fire House	TBD	0.25 (383)	MW (HP)	Natural Gas	SI	2013	Yes Yes	New
B141	B141 A	Cummins DFHD	1350	HP	No. 2 oil	CI	1999	No; N/A	Existing
B141	B141 B	Cummins DFJD	1350	HP	No. 2 oil	CI	2001	No; N/A	Existing

B141	B141 C	Cummins DQKC	2700	HP	No. 2 oil	CI	2006	No; N/A	New
B141	B141 D	Cummins SAK60-G6 NR2	2922	HP	No. 2 oil	CI	2010	Yes; Yes	New

A.3 Specifically Regulated Insignificant Activities [326 IAC 2-7-1(21)] [326 IAC 2-7-4(c)] [326 IAC 2-7-5(14)]

This stationary source also includes the following insignificant activities which are specifically regulated, as defined in 326 IAC 2-7-1(21):

(a) Degreasing operations that do not exceed 145 gallons per 12 months, except if subject to 326 IAC 20-6. [326 IAC 8-3]; and

(b) Activities with emissions equal to or less than insignificant thresholds: Cold cleaner degreasers that use more than 145 gallons per year, but have emissions less than 15 pounds per day of VOC. [326 IAC 8-3-2].

A.4 Insignificant Activities [326 IAC 2-7-1(21)] [326 IAC 2-7-4(c)] [326 IAC 2-7-5(14)]

This stationary source also includes the following insignificant activities as defined in 326 IAC 2-7-1(21):

(a) Equipment powered by internal combustion engines of capacity equal to or less than 500,000 Btu/hour, except where total capacity of equipment operated by one stationary source exceeds 2,000,000 Btu/hour.

(b) A petroleum fuel, other than gasoline, dispensing facility, having a storage tank cpacity less than or equal to ten thousand five hundred (10,500) gallons and dispensing three thousand five (3500) hundred gallons per day or less.

(c) The following VOC and HAP storage containers:
  (1) Storage tanks with capacity less than or equal to 1,000 gallons and annual through puts less than 12,000 gallons.
  (2) Vessels storing lubricating oils, hydraulic oils, machining oils, and machining fluids.

(d) Equipment used exclusively for filling drums, pails, or other packaging containers with lubricating oils.

(e) Application of oils, greases, lubricants or other nonvolatile materials applied as temporary protective coatings.

(f) Machining where an aqueous cutting coolant continuously floods the machining interface.

(g) Cleaners and solvents characterized as follows:
  (1) having a vapor pressure equal to or less than 2 kPa; 15mm Hg; or 0.3 psi measured at 38 degrees C (100°F) or;
  (2) having a vapor pressure equal to or less than 0.7 kPa; 5mm Hg; or 0.1 psi measured at 20 degrees C (68oF);
  the use of which for all cleaners and solvents combined does not exceed 145 gallons per 12 months.

(h) Equipment related manufacturing activities not resulting in the emissions of HAPs, including brazing equipment, cutting torches, soldering equipment, and welding equipment.

(i) Structural steel fabrication activities including cutting two hundred thousand (200,00) linear feet or less of one (1) inch plate or equivalent, and using eighty (80) tons or less of welding consumables.

(j) Closed loop heating and cooling systems.

(k) Activities associated with the treatment of wastewater streams with an oil and grease content less than or equal to 1% by volume.

(l) Any operation using aqueous solutions containing less than 1% by weight of VOCs excluding HAPs.

(m) Use of water-based adhesives that are less than or equal to five percent (5%) by volume of VOCs excluding HAPs.

(n) Noncontact cooling tower systems with the following: forced and induced draft cooling tower system not regulated under a NESHAP.

(o) Replacement or repair of electrostatic precipitators, bags in baghouses and filters in other air filtration equipment.

(p) Heat exchanger cleaning and repair.

(q) Process vessel degassing and cleaning to prepare for internal repairs.

(r) Stockpiled soils from soil remediation activities that are covered and waiting transport for disposal.

(s) Paved and unpaved roads and parking lots with public access. [326 IAC 6-4]

(t) Asbestos abatement projects regulated by 326 IAC 14-10.

(u) Purging of gas lines and vessels that is related to routine maintenance and repair of buildings, structures, or vehicles at the source where air emissions from those activities would not be associated with any production process.

(v) Equipment used to collect any material that might be released during a malfunction, process upset, or spill cleanup, including catch tanks, temporary liquid separators, tanks and fluid handling equipment.

(w) Blowdown for any of the following: sight glass; boiler; compressors; pumps; and cooling tower.

(x) On-site fire and emergency response training approved by the department.

(y) Emergency generators as follows: Diesel generators not exceeding 1600 horsepower and Natural gas turbines or reciprocating engines not exceeding sixteen thousand (16000) horsepower.

(z) Stationary fire pumps.

(aa) Purge double block and bleed valves.

(bb) Filter or coalescer media changeout.

(cc) Laboratories as defined in 326 IAC 2-7-1(21)(D).

(dd) Research and development activities as defined in 326 IAC 2-7-1(21)(E).

(ee) Any unit emitting greater than 1 pound per day but less than 5 pounds per day or 1 ton per year of a single HAP:
(1) Loading and unloading of raw materials and wastes into tank trucks and/or rail cars. There are at least two of these installations.
(2) Equipment cleaning.

(ff) Any unit emitting greater than 1 pound per day but less than 12.5 pounds per day or 2.5 tons per year of any combination of HAPs.
(1) Optimization and testing of developmental fermentation processes in fermenters less than or equal to 6,000 liter nominal volume. This description applies to a minimum of ten fermenters.
(2) Manufacturing in fermenters of less than or equal to 47,000 liter nominal volume. This applies to at least four fermenters.
(3) Filtration of fermentation broths in lots less than 2,000 liters nominal volume. This description applies to a minimum of three installations.
(4) Processing in development area portable tanks, less than 500 liters nominal volume. This description applies to a minimum of two tanks.
(5) Hydrogenation equipment less than 50 gallons nominal volume located in developmental area. This description applies to a minimum of two installations.

(gg) Activities with emissions equal to or less than insignificant thresholds:
(1) Optimization, testing, and manufacturing with fermentors. Emissions less than 5 pounds per hour and 25 pounds per day particulate matter and 3 pounds per hour and 15 pounds per day of VOC.
(2) Testing of cartridge filters used as part of fermentation and sterile area operations. Emissions are less than 3 pounds per hour and 15 pounds per day of VOC.
(3) Equipment cleaning. Emissions are less than 3 pounds per hour and 15 pounds per day of VOC.
(4) Pilot plant equipment used in optimization of the purification of potential manufacturing fermentation processes. Emissions are less than 3 pounds per hour and 15 pounds per day of VOC.
(5) Printing operations for product identification. Emissions are less than 3 pounds per hour and 15 pounds per day of VOC.
(6) Fluid bed dryers in dry products manufacturing. Emissions are less than 5 pounds per hour and 25 pounds per day particulate matter.
(7) Process equipment or storage tanks which contain a VOC with a vapor pressure less than 0.1 mm Hg.
(8) Storage tanks for emergency generators, < 75 m3 in volume, which contain No. 2 diesel fuel.
(9) Injector pen assembly using polymerizing glues with emissions less than

1 lb/day of HAP and less than 3 lbs/hour or 15 lbs/day of VOC.

A.5 Part 70 Permit Applicability [326 IAC 2-7-2]

This stationary source is required to have a Part 70 permit by 326 IAC 2-7-2 (Applicability) because:

(a) It is a major source, as defined in 326 IAC 2-7-1(22);

(b) It is a source in a source category designated by the United States Environmental Protection Agency (U.S. EPA) under 40 CFR 70.3 (Part 70 - Applicability).

SECTION B GENERAL CONDITIONS

B.1 Definitions [326 IAC 2-7-1]

Terms in this permit shall have the definition assigned to such terms in the referenced regulation. In the absence of definitions in the referenced regulation, the applicable definitions found in the statutes or regulations (IC 13-11, 326 IAC 1-2 and 326 IAC 2-7) shall prevail.

B.2 Permit Term [326 IAC 2-7-5(2)][326 IAC 2-1.1-9.5][326 IAC 2-7-4(a)(1)(D)][IC 13-15-3-6(a)]

(a) This permit, T097-30149-00072, is issued for a fixed term of five (5) years from the issuance date of this permit, as determined in accordance with IC 4-21.5-3-5(f) and IC 13-15-5-3. Subsequent revisions, modifications, or amendments of this permit do not affect the expiration date of this permit or of permits issued pursuant to Title IV of the Clean Air Act and 326 IAC 21 (Acid Deposition Control).

(b) If IDEM, OAQ, upon receiving a timely and complete renewal permit application, fails to issue or deny the permit renewal prior to the expiration date of this permit, this existing permit shall not expire and all terms and conditions shall continue in effect, including any permit shield provided in 326 IAC 2-7-15, until the renewal permit has been issued or denied.

B.3 Term of Conditions [326 IAC 2-1.1-9.5]

Notwithstanding the permit term of a permit to construct, a permit to operate, or a permit modification, any condition established in a permit issued pursuant to a permitting program approved in the state implementation plan shall remain in effect until:

(a) the condition is modified in a subsequent permit action pursuant to Title I of the Clean Air Act; or

(b) the emission unit to which the condition pertains permanently ceases operation.

B.4 Enforceability [326 IAC 2-7-7] [IC 13-17-12]

Unless otherwise stated, all terms and conditions in this permit, including any provisions designed to limit the source's potential to emit, are enforceable by IDEM, the United States Environmental Protection Agency (U.S. EPA) and by citizens in accordance with the Clean Air Act.

B.5 Severability [326 IAC 2-7-5(5)]

The provisions of this permit are severable; a determination that any portion of this permit is invalid shall not affect the validity of the remainder of the permit.

B.6 Property Rights or Exclusive Privilege [326 IAC 2-7-5(6)(D)]

This permit does not convey any property rights of any sort or any exclusive privilege.

B.7 Duty to Provide Information [326 IAC 2-7-5(6)(E)]

(a) The Permittee shall furnish to IDEM, OAQ, within a reasonable time, any information that IDEM, OAQ may request in writing to determine whether cause exists for modifying, revoking and reissuing, or terminating this permit, or to determine compliance with this permit. Upon request, the Permittee shall also furnish to IDEM, OAQ copies of records required to be kept by this permit.

(b) For information furnished by the Permittee to IDEM, OAQ, the Permittee may include a claim of confidentiality in accordance with 326 IAC 17.1. When furnishing copies of

requested records directly to U. S. EPA, the Permittee may assert a claim of confidentiality in accordance with 40 CFR 2, Subpart B.

B.8 Certification [326 IAC 2-7-4(f)][326 IAC 2-7-6(1)][326 IAC 2-7-5(3)(C)]

(a) A certification required by this permit meets the requirements of 326 IAC 2-7-6(1) if:

(1) it contains a certification by a "responsible official" as defined by 326 IAC 2-7-1(35), and

(2) the certification states that, based on information and belief formed after reasonable inquiry, the statements and information in the document are true, accurate, and complete.

(b) The Permittee may use the attached Certification Form, or its equivalent with each submittal requiring certification. One (1) certification may cover multiple forms in one (1) submittal.

(c) A "responsible official" is defined at 326 IAC 2-7-1(35).

B.9 Annual Compliance Certification [326 IAC 2-7-6(5)]

(a) The Permittee shall annually submit a compliance certification report which addresses the status of the source's compliance with the terms and conditions contained in this permit, including emission limitations, standards, or work practices. All certifications shall cover the time period from January 1 to December 31 of the previous year, and shall be submitted no later than April 15 of each year to:

Indiana Department of Environmental Management
Compliance and Enforcement Branch, Office of Air Quality
100 North Senate Avenue
MC 61-53 IGCN 1003
Indianapolis, Indiana 46204-2251

and

United States Environmental Protection Agency, Region V
Air and Radiation Division, Air Enforcement Branch - Indiana (AE-17J)
77 West Jackson Boulevard
Chicago, Illinois 60604-3590

(b) The annual compliance certification report required by this permit shall be considered timely if the date postmarked on the envelope or certified mail receipt, or affixed by the shipper on the private shipping receipt, is on or before the date it is due. If the document is submitted by any other means, it shall be considered timely if received by IDEM, OAQ on or before the date it is due.

(c) The annual compliance certification report shall include the following:

(1) The appropriate identification of each term or condition of this permit that is the basis of the certification;

(2) The compliance status;

(3) Whether compliance was continuous or intermittent;

(4) The methods used for determining the compliance status of the source, currently and over the reporting period consistent with 326 IAC 2-7-5(3); and

(5) Such other facts, as specified in Sections D of this permit, as IDEM, OAQ may require to determine the compliance status of the source.

The submittal by the Permittee does require a certification that meets the requirements of 326 IAC 2-7-6(1) by a "responsible official" as defined by 326 IAC 2-7-1(35).

B.10 Preventive Maintenance Plan [326 IAC 2-7-5(12)][326 IAC 1-6-3]

(a) A Preventive Maintenance Plan meets the requirements of 326 IAC 1-6-3 if it includes, at a minimum:

(1) Identification of the individual(s) responsible for inspecting, maintaining, and repairing emission control devices;

(2) A description of the items or conditions that will be inspected and the inspection schedule for said items or conditions; and

(3) Identification and quantification of the replacement parts that will be maintained in inventory for quick replacement.

The Permittee shall implement the PMPs, including any required record keeping, as necessary to ensure that failure to implement a PMP does not cause or contribute to an exceedance of any limitation on emissions or potential to emit.

(b) If required by specific condition(s) in Section D of this permit where no PMP was previously required, the Permittee shall prepare and maintain Preventive Maintenance Plans (PMPs) no later than ninety (90) days after issuance of this permit or ninety (90) days after initial start-up, whichever is later, including the following information on each facility:

(1) Identification of the individual(s) responsible for inspecting, maintaining, and repairing emission control devices;

(2) A description of the items or conditions that will be inspected and the inspection schedule for said items or conditions; and

(3) Identification and quantification of the replacement parts that will be maintained in inventory for quick replacement.

If, due to circumstances beyond the Permittee’s control, the PMPs cannot be prepared and maintained within the above time frame, the Permittee may extend the date an additional ninety (90) days provided the Permittee notifies:

Indiana Department of Environmental Management
Compliance and Enforcement Branch, Office of Air Quality
100 North Senate Avenue

MC 61-53 IGCN 1003
Indianapolis, Indiana 46204-2251

The PMP extension notification does not require a certification that meets the requirements of 326 IAC 2-7-6(1) by a "responsible official" as defined by 326 IAC 2-7-1(35).

The Permittee shall implement the PMPs, including any required record keeping, as necessary to ensure that failure to implement a PMP does not cause or contribute to an exceedance of any limitation on emissions or potential to emit.

(c) A copy of the PMPs shall be submitted to IDEM, OAQ upon request and within a reasonable time, and shall be subject to review and approval by IDEM, OAQ. IDEM, OAQ may require the Permittee to revise its PMPs whenever lack of proper maintenance causes or is the primary contributor to an exceedance of any limitation on emissions. The PMPs and their submittal do not require a certification that meets the requirements of 326 IAC 2-7-6(1) by a "responsible official" as defined by 326 IAC 2-7-1(35).

(d) To the extent the Permittee is required by 40 CFR Part 60/63 to have an Operation Maintenance, and Monitoring (OMM) Plan for a unit, such Plan is deemed to satisfy the PMP requirements of 326 IAC 1-6-3 for that unit.

B.11 Emergency Provisions [326 IAC 2-7-16]

(a) An emergency, as defined in 326 IAC 2-7-1(12), is not an affirmative defense for an action brought for noncompliance with a federal or state health-based emission limitation.

(b) An emergency, as defined in 326 IAC 2-7-1(12), constitutes an affirmative defense to an action brought for noncompliance with a technology-based emission limitation if the affirmative defense of an emergency is demonstrated through properly signed, contemporaneous operating logs or other relevant evidence that describe the following:

(1) An emergency occurred and the Permittee can, to the extent possible, identify the causes of the emergency;

(2) The permitted facility was at the time being properly operated;

(3) During the period of an emergency, the Permittee took all reasonable steps to minimize levels of emissions that exceeded the emission standards or other requirements in this permit;

(4) For each emergency lasting one (1) hour or more, the Permittee notified IDEM, OAQ, within four (4) daytime business hours after the beginning of the emergency, or after the emergency was discovered or reasonably should have been discovered;

Telephone Number: 1-800-451-6027 (ask for Office of Air Quality, Compliance and Enforcement Branch), or
Telephone Number: 317-233-0178 (ask for Office of Air Quality, Compliance and Enforcement Branch)
Facsimile Number: 317-233-6865

(5) For each emergency lasting one (1) hour or more, the Permittee submitted the attached Emergency Occurrence Report Form or its equivalent, either by mail or facsimile to:

Indiana Department of Environmental Management
Compliance and Enforcement Branch, Office of Air Quality
100 North Senate Avenue
MC 61-53 IGCN 1003
Indianapolis, Indiana 46204-2251

within two (2) working days of the time when emission limitations were exceeded due to the emergency.

The notice fulfills the requirement of 326 IAC 2-7-5(3)(C)(ii) and must contain the following:

(A) A description of the emergency;

(B) Any steps taken to mitigate the emissions; and

(C) Corrective actions taken.

The notification which shall be submitted by the Permittee does not require a certification that meets the requirements of 326 IAC 2-7-6(1) by a "responsible official" as defined by 326 IAC 2-7-1(35).

(6) The Permittee immediately took all reasonable steps to correct the emergency.

(c) In any enforcement proceeding, the Permittee seeking to establish the occurrence of an emergency has the burden of proof.

(d) This emergency provision supersedes 326 IAC 1-6 (Malfunctions). This permit condition is in addition to any emergency or upset provision contained in any applicable requirement.

(e) The Permittee seeking to establish the occurrence of an emergency shall make records available upon request to ensure that failure to implement a PMP did not cause or contribute to an exceedance of any limitations on emissions. However, IDEM, OAQ may require that the Preventive Maintenance Plans required under 326 IAC 2-7-4(c)(8) be revised in response to an emergency.

(f) Failure to notify IDEM, OAQ by telephone or facsimile of an emergency lasting more than one (1) hour in accordance with (b)(4) and (5) of this condition shall constitute a violation of 326 IAC 2-7 and any other applicable rules.

(g) If the emergency situation causes a deviation from a technology-based limit, the Permittee may continue to operate the affected emitting facilities during the emergency provided the Permittee immediately takes all reasonable steps to correct the emergency and minimize emissions.

B.12 Permit Shield [326 IAC 2-7-15][326 IAC 2-7-20][326 IAC 2-7-12]

(a) Pursuant to 326 IAC 2-7-15, the Permittee has been granted a permit shield. The permit shield provides that compliance with the conditions of this permit shall be deemed compliance with any applicable requirements as of the date of permit issuance, provided that either the applicable requirements are included and specifically identified in this permit or the permit contains an explicit determination or concise summary of a determination that other specifically identified requirements are not applicable. The Indiana statutes from IC 13 and rules from 326 IAC, referenced in conditions in this permit, are those applicable at the time the permit was issued. The issuance or possession of this permit shall not alone constitute a defense against an alleged violation of any law, regulation or standard, except for the requirement to obtain a Part 70 permit under 326 IAC 2-7 or for applicable requirements for which a permit shield has been granted.

This permit shield does not extend to applicable requirements which are promulgated after the date of issuance of this permit unless this permit has been modified to reflect such new requirements.

(b) In addition to the nonapplicability determinations set forth in Sections D of this permit, the IDEM, OAQ have made the following determinations regarding this source:

(1) **40 CFR 63, Subpart I and 326 IAC 20-12 -- National Emission Standards for Organic Hazardous Air Pollutants for Certain Processes Subject to the Negotiated Regulation for Equipment Leaks** This source is not subject to 40 CFR 63, Subpart I and 326 IAC 20-12, which applies to pharmaceutical production processes using carbon tetrachloride or methylene chloride. The source does not have any pharmaceutical production processes using carbon tetrachloride or methylene chloride.

(2) **40 CFR 63, Subpart T-- National Emission Standards for Halogenated Solvent Cleaning** This source is not subject to 40 CFR 63, Subpart T (National Emission Standards for Halogenated Solvent Cleaning) because the source does not use a solvent containing methylene chloride, perchloroethylene, trichloroethylene, 1, 1, 1-trichloroethylene, carbon tetrachloride, or chloroform or any combination of these halogenated HAP solvents, in a total concentration greater than five percent (5%) by weight as a cleaning and/or drying agent in an individual batch vapor, in-line vapor, in line cold and batch cold solvent cleaning machine.

(3) **40 CFR 60, Subpart K – Storage Vessels for Petroleum Liquids**: This source is not subject to 40 CFR Part 60, Subpart K and 326 IAC 12 because none of the storage tanks at the source constructed between June 11, 1973 and May 19, 1978 store petroleum liquids, as defined in 40 CFR 60.111.

(4) **40 CFR 60, Subpart Ka – Storage Vessels for Petroleum Liquids**: This source is not subject to 40 CFR Part 60, Subpart K and 326 IAC 12 because none of the storage tanks at the source constructed between May 19, 1978 and July 23, 1984 store petroleum liquids, as defined in 40 CFR 60.111.

(5) **40 CFR 60, Subpart Kb – Storage Vessels for Volatile Organic Liquids:** This source is not subject to 40 CFR Part 60, Subpart Kb and 326 IAC 12 because

none of the storage tanks at the source constructed after July 23, 1984 with capacity greater than or equal to 75 m3 but less than 151 m3 stores a volatile organic liquid with a maximum true vapor pressure greater than or equal to 15.0 kPa. No storage tank at the source of equal to or greater than 151 m3 capacity constructed after July 23, 1984 stores a volatile organic liquid with a maximum true vapor pressure greater than or equal to 3.5 kPa.

(6) **40 CFR 60, Subparts VV, VVa, III, NNN and RRR – Synthetic organic chemical manufacturing:** This source is not subject to 40 CFR Part 60, Subparts VV, III, NNN, and RRR and 326 IAC 12 because the source is not engaged in the manufacture of synthetic organic chemicals as defined by those standards. The source does not produce, as an intermediate, final product, co-product, or byproduct, a chemical listed in 40 CFR 60.489 [Subpart VV and Subpart VVa], 40 CFR 60.617 [Subpart III], 40 CFR 60.667 [Subpart NNN], or 40 CFR 60.707 [Subpart RRR]

(7) **40 CFR 60, Appendix B, Performance Specification 16 - Predictive Emission Monitoring System:** This rule does not apply because the source does not operate any predictive emission monitoring systems (PEMS).

(8) **40 CFR 63, Sections 63.50 through 63.56 – Section 112(j)**: This source is not subject to 40 CFR Part 63, Sections 63.50 through 63.56 because there are no affected sources within a source category or subcategory for which USEPA has failed to promulgate emission standards by the section 112(j) deadlines.

(9) **40 CFR 63, Subparts F and G – Synthetic Organic Chemical Manufacturing:** This source is not subject to 40 CFR Part 63, Subparts F and G (326 IAC 20-11) because the source does not manufacture compounds listed in table 1 of Subpart F or use as a reactant compounds listed in table 2 of Subpart F. [40 CFR 63.100(b)]

(10) **40 CFR 63, Subpart O – Ethylene Oxide Sterilizers:** This source is not subject to 40 CFR Part 63, Subpart O and 326 IAC 20-5 because the source does not utilize ethylene oxide in sterilization operations. [40 CFR 63.360]

(11) **40 CFR 63, Subpart Q – Industrial Process Cooling Towers:** This source is not subject to 40 CFR Part 63, Subpart Q and 326 IAC 20-4 because the source does not utilize chromium based water treatment compounds in its cooling towers. [40 CFR 63.400]

(12) **40 CFR 63, Subpart YY – Generic MACT categories:** This source is not subject to 40 CFR Part 63, Subpart YY and 326 IAC 20-44 because the source is not one of the source categories described in 40 CFR 63.1103. [40 CFR 63.1100]

(13) **40 CFR 63, Subpart MMM – Pesticide Active Ingredient Production:** This source is not subject to 40 CFR Part 63, Subpart MMM and 326 IAC 20-45 because the source does not contain any pesticide active ingredient process units or associated equipment as described in 40 CFR 63.1360. [40 CFR 63.1360]

(14) **40 CFR 63, Subpart EEEE – Organic Liquid Distribution**: All potentially affected areas of the site are research facilities, are subject to Pharma MACT already, or are used for fuel storage and therefore 40 CFR Part 63, Subpart EEEE and 326 IAC 20-83 does not apply.

(15) **40 CFR 63, Subpart FFFF – Miscellaneous Organic Chemical Production and Processes:** This source is not subject to 40 CFR Part 63, Subpart FFFF or 326 IAC 200-44 because all the affected facilities at the source that would otherwise be subject to Subpart FFFF are subject to 40 CFR 63, Subpart GGG.

(16) **40 CFR 63, Subpart PPPP—Surface Coating of Plastic Parts and Products:** This source is not subject to 40 CFR Part 63, Subpart PPPP and 326 IAC 20-81 because the plastic parts coating operations do not use 378 liters (100 gallons) per year of coatings that contain hazardous air pollutants.

(17) **326 IAC 6-5 – Fugitive Particulate Matter Emission Limitations:** This source does not have potential fugitive dust emissions greater than 25 tons per year,and is therefore, not subject to the requirements of this rule.

(18) **326 IAC 8-4 – Petroleum Sources:** This source does not operate any facilities subject to the requirements of 326 IAC 8-4. 326 IAC 8-4-6 is not applicable to this source because the source does not accept deliveries of gasoline by transports, as defined by 326 IAC 1-2-84.

(19) **326 IAC 8-6 – Organic Solvent Emissions Limitations**: The provisions of 326 IAC 8-6 are not applicable to this source because the source is subject to other rules in 326 IAC 8.

(20) **326 IAC 8-15: Standards for Consumer and Commercial Products:** All consumer and commercial products manufactured at the source are either exempt product types (prescription drug products) or not of a type listed in the regulation. Therefore, the source is not subject to the requirements of this rule.

(21) **326 IAC 10 – Nitrogen Oxide Rules: This source** does not contain any emission units identified in 326 IAC 10-4. Therefore, the source is not subject to the NOx emission control requirements of that rule.

(22) **326 IAC 11 – Emission Limitations for Specific Types of Operations:** This source does not contain any emission units described in 326 IAC 11. Therefore, the source is not subject to the requirements of those rules.

(23) **326 IAC 15 – Lead Rules:** This source does not contain any emission units described in 326 IAC 15. Therefore, the source is not subject to the requirements of those rules.

(24) **326 IAC 21 – Acid Deposition:** This source does not contain any emission unitsdescribed in 326 IAC 21. Therefore, the source is not subject to therequirements of those rules.

(c) If, after issuance of this permit, it is determined that the permit is in nonconformance with an applicable requirement that applied to the source on the date of permit issuance, IDEM, OAQ, shall immediately take steps to reopen and revise this permit and issue a compliance order to the Permittee to ensure expeditious compliance with the applicable requirement until the permit is reissued. The permit shield shall continue in effect so long as the Permittee is in compliance with the compliance order.

(d) No permit shield shall apply to any permit term or condition that is determined after issuance of this permit to have been based on erroneous information supplied in the

permit application. Erroneous information means information that the Permittee knew to be false, or in the exercise of reasonable care should have been known to be false, at the time the information was submitted.

(e) Nothing in 326 IAC 2-7-15 or in this permit shall alter or affect the following:

(1) The provisions of Section 303 of the Clean Air Act (emergency orders), including the authority of the U.S. EPA under Section 303 of the Clean Air Act;

(2) The liability of the Permittee for any violation of applicable requirements prior to or at the time of this permit's issuance;

(3) The applicable requirements of the acid rain program, consistent with Section 408(a) of the Clean Air Act; and

(4) The ability of U.S. EPA to obtain information from the Permittee under Section 114 of the Clean Air Act.

(f) This permit shield is not applicable to any change made under 326 IAC 2-7-20(b)(2) (Sections 502(b)(10) of the Clean Air Act changes) and 326 IAC 2-7-20(c)(2) (trading based on State Implementation Plan (SIP) provisions).

(g) This permit shield is not applicable to modifications eligible for group processing until after IDEM, OAQ, has issued the modifications. [326 IAC 2-7-12(c)(7)]

(h) This permit shield is not applicable to minor Part 70 permit modifications until after IDEM, OAQ, has issued the modification. [326 IAC 2-7-12(b)(8)]

B.13 Prior Permits Superseded [326 IAC 2-1.1-9.5][326 IAC 2-7-10.5]

(a) All terms and conditions of permits established prior to T097-30149-00072 and issued pursuant to permitting programs approved into the state implementation plan have been either:

(1) incorporated as originally stated,

(2) revised under 326 IAC 2-7-10.5, or

(3) deleted under 326 IAC 2-7-10.5.

(b) Provided that all terms and conditions are accurately reflected in this permit, all previous registrations and permits are superseded by this Part 70 operating permit, except for permits issued pursuant to Title IV of the Clean Air Act and 326 IAC 21 (Acid Deposition Control).

B.14 Termination of Right to Operate [326 IAC 2-7-10][326 IAC 2-7-4(a)]

The Permittee's right to operate this source terminates with the expiration of this permit unless a timely and complete renewal application is submitted at least nine (9) months prior to the date of expiration of the source’s existing permit, consistent with 326 IAC 2-7-3 and 326 IAC 2-7-4(a).

B.15 Permit Modification, Reopening, Revocation and Reissuance, or Termination [326 IAC 2-7-5(6)(C)][326 IAC 2-7-8(a)][326 IAC 2-7-9]

(a) This permit may be modified, reopened, revoked and reissued, or terminated for cause. The filing of a request by the Permittee for a Part 70 Operating Permit modification, revocation and reissuance, or termination, or of a notification of planned changes or anticipated noncompliance does not stay any condition of this permit. [326 IAC 2-7-5(6)(C)] The notification by the Permittee does require a certification that meets the requirements of 326 IAC 2-7-6(1) by a "responsible official" as defined by 326 IAC 2-7-1(35).

(b) This permit shall be reopened and revised under any of the circumstances listed in IC 13-15-7-2 or if IDEM, OAQ determines any of the following:

(1) That this permit contains a material mistake.

(2) That inaccurate statements were made in establishing the emissions standards or other terms or conditions.

(3) That this permit must be revised or revoked to assure compliance with an applicable requirement. [326 IAC 2-7-9(a)(3)]

(c) Proceedings by IDEM, OAQ to reopen and revise this permit shall follow the same procedures as apply to initial permit issuance and shall affect only those parts of this permit for which cause to reopen exists. Such reopening and revision shall be made as expeditiously as practicable. [326 IAC 2-7-9(b)]

(d) The reopening and revision of this permit, under 326 IAC 2-7-9(a), shall not be initiated before notice of such intent is provided to the Permittee by IDEM, OAQ at least thirty (30) days in advance of the date this permit is to be reopened, except that IDEM, OAQ may provide a shorter time period in the case of an emergency. [326 IAC 2-7-9(c)]

B.16 Permit Renewal [326 IAC 2-7-3][326 IAC 2-7-4][326 IAC 2-7-8(e)]

(a) The application for renewal shall be submitted using the application form or forms prescribed by IDEM, OAQ and shall include the information specified in 326 IAC 2-7-4. Such information shall be included in the application for each emission unit at this source, except those emission units included on the trivial or insignificant activities list contained in 326 IAC 2-7-1(21) and 326 IAC 2-7-1(40). The renewal application does require a certification that meets the requirements of 326 IAC 2-7-6(1) by a "responsible official" as defined by 326 IAC 2-7-1(35).

Request for renewal shall be submitted to:

Indiana Department of Environmental Management
Permit Administration and Support Section, Office of Air Quality
100 North Senate Avenue
MC 61-53 IGCN 1003
Indianapolis, Indiana 46204-2251

(b) A timely renewal application is one that is:

(1) Submitted at least nine (9) months prior to the date of the expiration of this permit; and

(2) If the date postmarked on the envelope or certified mail receipt, or affixed by the shipper on the private shipping receipt, is on or before the date it is due. If the document is submitted by any other means, it shall be considered timely if received by IDEM, OAQ on or before the date it is due.

(c) If the Permittee submits a timely and complete application for renewal of this permit, the source's failure to have a permit is not a violation of 326 IAC 2-7 until IDEM, OAQ takes final action on the renewal application, except that this protection shall cease to apply if, subsequent to the completeness determination, the Permittee fails to submit by the deadline specified, pursuant to 326 IAC 2-7-4(a)(2)(D), in writing by IDEM, OAQ any additional information identified as being needed to process the application.

B.17 Permit Amendment or Modification [326 IAC 2-7-11][326 IAC 2-7-12] [40 CFR 72]

(a) Permit amendments and modifications are governed by the requirements of 326 IAC 2-7-11 or 326 IAC 2-7-12 whenever the Permittee seeks to amend or modify this permit.

(b) Any application requesting an amendment or modification of this permit shall be submitted to:

Indiana Department of Environmental Management
Permit Administration and Support Section, Office of Air Quality
100 North Senate Avenue
MC 61-53 IGCN 1003
Indianapolis, Indiana 46204-2251

Any such application does require a certification that meets the requirements of 326 IAC 2-7-6(1) by a "responsible official" as defined by 326 IAC 2-7-1(35).

(c) The Permittee may implement administrative amendment changes addressed in the request for an administrative amendment immediately upon submittal of the request. [326 IAC 2-7-11(c)(3)]

B.18 Permit Revision Under Economic Incentives and Other Programs [326 IAC 2-7-5(8)] [326 IAC 2-7-12(b)(2)]

(a) No Part 70 permit revision or notice shall be required under any approved economic incentives, marketable Part 70 permits, emissions trading, and other similar programs or processes for changes that are provided for in a Part 70 permit.

(b) Notwithstanding 326 IAC 2-7-12(b)(1) and 326 IAC 2-7-12(c)(1), minor Part 70 permit modification procedures may be used for Part 70 modifications involving the use of economic incentives, marketable Part 70 permits, emissions trading, and other similar approaches to the extent that such minor Part 70 permit modification procedures are explicitly provided for in the applicable State Implementation Plan (SIP) or in applicable requirements promulgated or approved by the U.S. EPA.

B.19 Operational Flexibility [326 IAC 2-7-20][326 IAC 2-7-10.5]

(a) The Permittee may make any change or changes at the source that are described in 326 IAC 2-7-20(b) or (c) without a prior permit revision, if each of the following conditions is met:

(1) The changes are not modifications under any provision of Title I of the Clean Air Act;

(2) Any preconstruction approval required by 326 IAC 2-7-10.5 has been obtained;

(3) The changes do not result in emissions which exceed the limitations provided in this permit (whether expressed herein as a rate of emissions or in terms of total emissions);

(4) The Permittee notifies the:

Indiana Department of Environmental Management
Permit Administration and Support Section, Office of Air Quality
100 North Senate Avenue
MC 61-53 IGCN 1003
Indianapolis, Indiana 46204-2251

and

United States Environmental Protection Agency, Region V
Air and Radiation Division, Regulation Development Branch - Indiana (AR-18J)
77 West Jackson Boulevard
Chicago, Illinois 60604-3590

in advance of the change by written notification at least ten (10) days in advance of the proposed change. The Permittee shall attach every such notice to the Permittee's copy of this permit; and

(5) The Permittee maintains records on-site, on a rolling five (5) year basis, which document all such changes and emission trades that are subject to 326 IAC 2-7-20(b) or (c). The Permittee shall make such records available, upon reasonable request, for public review.

Such records shall consist of all information required to be submitted to IDEM, OAQ in the notices specified in 326 IAC 2-7-20(b)(1) and (c)(1).

(b) The Permittee may make Section 502(b)(10) of the Clean Air Act changes (this term is defined at 326 IAC 2-7-1(36)) without a permit revision, subject to the constraint of 326 IAC 2-7-20(a). For each such Section 502(b)(10) of the Clean Air Act change, the required written notification shall include the following:

(1) A brief description of the change within the source;

(2) The date on which the change will occur;

(3) Any change in emissions; and

(4) Any permit term or condition that is no longer applicable as a result of the change.

The notification which shall be submitted is not considered an application form, report or compliance certification. Therefore, the notification by the Permittee does not require a certification that meets the requirements of 326 IAC 2-7-6(1) by a "responsible official" as defined by 326 IAC 2-7-1(35).

(c) Emission Trades [326 IAC 2-7-20(c)]
The Permittee may trade emissions increases and decreases at the source, where the applicable SIP provides for such emission trades without requiring a permit revision, subject to the constraints of Section (a) of this condition and those in 326 IAC 2-7-20(c).

(d) Alternative Operating Scenarios [326 IAC 2-7-20(d)]
The Permittee may make changes at the source within the range of alternative operating scenarios that are described in the terms and conditions of this permit in accordance with 326 IAC 2-7-5(9). No prior notification of IDEM, OAQ, or U.S. EPA is required.

(e) Backup fuel switches specifically addressed in, and limited under, Section D of this permit shall not be considered alternative operating scenarios. Therefore, the notification requirements of part (a) of this condition do not apply.

(f) This condition does not apply to emission trades of SO_2 or NO_X under 326 IAC 21 or 326 IAC 10-4.

B.20 Source Modification Requirement [326 IAC 2-7-10.5]

A modification, construction, or reconstruction is governed by the requirements of 326 IAC 2.

B.21 Inspection and Entry [326 IAC 2-7-6][IC 13-14-2-2][IC 13-30-3-1][IC 13-17-3-2]

Upon presentation of proper identification cards, credentials, and other documents as may be required by law, and subject to the Permittee's right under all applicable laws and regulations to assert that the information collected by the agency is confidential and entitled to be treated as such, the Permittee shall allow IDEM, OAQ, U.S. EPA, or an authorized representative to perform the following:

(a) Enter upon the Permittee's premises where a Part 70 source is located, or emissions related activity is conducted, or where records must be kept under the conditions of this permit;

(b) As authorized by the Clean Air Act, IC 13-14-2-2, IC 13-17-3-2, and IC 13-30-3-1, have access to and copy any records that must be kept under the conditions of this permit;

(c) As authorized by the Clean Air Act, IC 13-14-2-2, IC 13-17-3-2, and IC 13-30-3-1, inspect any facilities, equipment (including monitoring and air pollution control equipment), practices, or operations regulated or required under this permit;

(d) As authorized by the Clean Air Act, IC 13-14-2-2, IC 13-17-3-2, and IC 13-30-3-1, sample or monitor substances or parameters for the purpose of assuring compliance with this permit or applicable requirements; and

(e) As authorized by the Clean Air Act, IC 13-14-2-2, IC 13-17-3-2, and IC 13-30-3-1, utilize any photographic, recording, testing, monitoring, or other equipment for the purpose of assuring compliance with this permit or applicable requirements.

B.22 Transfer of Ownership or Operational Control [326 IAC 2-7-11]

(a) The Permittee must comply with the requirements of 326 IAC 2-7-11 whenever the Permittee seeks to change the ownership or operational control of the source and no other change in the permit is necessary.

(b) Any application requesting a change in the ownership or operational control of the source shall contain a written agreement containing a specific date for transfer of permit responsibility, coverage and liability between the current and new Permittee. The application shall be submitted to:

Indiana Department of Environmental Management
Permit Administration and Support Section, Office of Air Quality
100 North Senate Avenue
MC 61-53 IGCN 1003
Indianapolis, Indiana 46204-2251

Any such application does require a certification that meets the requirements of 326 IAC 2-7-6(1) by a "responsible official" as defined by 326 IAC 2-7-1(35).

(c) The Permittee may implement administrative amendment changes addressed in the request for an administrative amendment immediately upon submittal of the request. [326 IAC 2-7-11(c)(3)]

B.23 Annual Fee Payment [326 IAC 2-7-19] [326 IAC 2-7-5(7)][326 IAC 2-1.1-7]

(a) The Permittee shall pay annual fees to IDEM, OAQ within thirty (30) calendar days of receipt of a billing. Pursuant to 326 IAC 2-7-19(b), if the Permittee does not receive a bill from IDEM, OAQ the applicable fee is due April 1 of each year.

(b) Except as provided in 326 IAC 2-7-19(e), failure to pay may result in administrative enforcement action or revocation of this permit.

(c) The Permittee may call the following telephone numbers: 1-800-451-6027 or 317-233-4230 (ask for OAQ, Billing, Licensing, and Training Section), to determine the appropriate permit fee.

B.24 Credible Evidence [326 IAC 2-7-5(3)][326 IAC 2-7-6][62 FR 8314] [326 IAC 1-1-6]

For the purpose of submitting compliance certifications or establishing whether or not the Permittee has violated or is in violation of any condition of this permit, nothing in this permit shall preclude the use, including the exclusive use, of any credible evidence or information relevant to whether the Permittee would have been in compliance with the condition of this permit if the appropriate performance or compliance test or procedure had been performed.

SECTION C SOURCE OPERATION CONDITIONS

Entire Source

Emission Limitations and Standards [326 IAC 2-7-5(1)]

C.1 Particulate Emission Limitations For Processes with Process Weight Rates Less Than One Hundred (100) Pounds per Hour [326 IAC 6-3-2]

Pursuant to 326 IAC 6-3-2(e)(2), particulate emissions from any process not exempt under 326 IAC 6-3-1(b) or (c) which has a maximum process weight rate less than 100 pounds per hour and the methods in 326 IAC 6-3-2(b) through (d) do not apply shall not exceed 0.551 pounds per hour.

C.2 Opacity [326 IAC 5-1]

Pursuant to 326 IAC 5-1-2 (Opacity Limitations), except as provided in 326 IAC 5-1-1 (Applicability) and 326 IAC 5-1-3 (Temporary Alternative Opacity Limitations), opacity shall meet the following, unless otherwise stated in this permit:

(a) Opacity shall not exceed an average of thirty percent (30%) in any one (1) six (6) minute averaging period as determined in 326 IAC 5-1-4.

(b) Opacity shall not exceed sixty percent (60%) for more than a cumulative total of fifteen (15) minutes (sixty (60) readings as measured according to 40 CFR 60, Appendix A, Method 9 or fifteen (15) one (1) minute nonoverlapping integrated averages for a continuous opacity monitor) in a six (6) hour period.

C.3 Open Burning [326 IAC 4-1] [IC 13-17-9]

The Permittee shall not open burn any material except as provided in 326 IAC 4-1-3, 326 IAC 4-1-4 or 326 IAC 4-1-6. The previous sentence notwithstanding, the Permittee may open burn in accordance with an open burning approval issued by the Commissioner under 326 IAC 4-1-4.1.

C.4 Incineration [326 IAC 4-2] [326 IAC 9-1-2]

The Permittee shall not operate an incinerator except as provided in 326 IAC 4-2 or in this permit. The Permittee shall not operate a refuse incinerator or refuse burning equipment except as provided in 326 IAC 9-1-2 or in this permit.

C.5 Fugitive Dust Emissions [326 IAC 6-4]

The Permittee shall not allow fugitive dust to escape beyond the property line or boundaries of the property, right-of-way, or easement on which the source is located, in a manner that would violate 326 IAC 6-4 (Fugitive Dust Emissions). 326 IAC 6-4-2(4) is not federally enforceable.

C.6 Asbestos Abatement Projects [326 IAC 14-10] [326 IAC 18] [40 CFR 61, Subpart M]

The Permittee shall comply with the applicable requirements of 326 IAC 14-10, 326 IAC 18, and 40 CFR 61.140.The requirement in 326 IAC 14-10(a) that the owner or operator shall use an Indiana Accredited Asbestos Inspector and all the requirements in 326 IAC 18 related to licensing requirements for asbestos inspectors are not federally enforceable.

Testing Requirements [326 IAC 2-7-6(1)]

C.7 Performance Testing [326 IAC 3-6]

(a) For performance testing required by this permit, a test protocol, except as provided elsewhere in this permit, shall be submitted to:

Indiana Department of Environmental Management
Compliance and Enforcement Branch, Office of Air Quality
100 North Senate Avenue
MC 61-53 IGCN 1003
Indianapolis, Indiana 46204-2251

no later than thirty-five (35) days prior to the intended test date. The protocol submitted by the Permittee does not require a certification that meets the requirements of 326 IAC 2-7-6(1) by a "responsible official" as defined by 326 IAC 2-7-1(35).

(b) The Permittee shall notify IDEM, OAQ of the actual test date at least fourteen (14) days prior to the actual test date. The notification submitted by the Permittee does not require a certification that meets the requirements of 326 IAC 2-7-6(1) by a "responsible official" as defined by 326 IAC 2-7-1(35).

(c) Pursuant to 326 IAC 3-6-4(b), all test reports must be received by IDEM, OAQ not later than forty-five (45) days after the completion of the testing. An extension may be granted by IDEM, OAQ if the Permittee submits to IDEM, OAQ a reasonable written explanation not later than five (5) days prior to the end of the initial forty-five (45) day period.

Compliance Requirements [326 IAC 2-1.1-11]

C.8 Compliance Requirements [326 IAC 2-1.1-11]

The commissioner may require stack testing, monitoring, or reporting at any time to assure compliance with all applicable requirements by issuing an order under 326 IAC 2-1.1-11. Any monitoring or testing shall be performed in accordance with 326 IAC 3 or other methods approved by the commissioner or the U. S. EPA.

Compliance Monitoring Requirements [326 IAC 2-7-5(1)][326 IAC 2-7-6(1)]

C.9 Compliance Monitoring [326 IAC 2-7-5(3)][326 IAC 2-7-6(1)]

Unless otherwise specified in this permit, for all monitoring requirements not already legally required, the Permittee shall be allowed up to ninety (90) days from the date of permit issuance or of initial start-up, whichever is later, to begin such monitoring. If due to circumstances beyond the Permittee's control, any monitoring equipment required by this permit cannot be installed and operated no later than ninety (90) days after permit issuance or the date of initial startup, whichever is later, the Permittee may extend the compliance schedule related to the equipment for an additional ninety (90) days provided the Permittee notifies:

Indiana Department of Environmental Management
Compliance and Enforcement Branch, Office of Air Quality
100 North Senate Avenue
MC 61-53 IGCN 1003
Indianapolis, Indiana 46204-2251

in writing, prior to the end of the initial ninety (90) day compliance schedule, with full justification of the reasons for the inability to meet this date.

The notification which shall be submitted by the Permittee does require a certification that meets the requirements of 326 IAC 2-7-6(1) by a "responsible official" as defined by 326 IAC 2-7-1(35).

Unless otherwise specified in the approval for the new emission unit(s), compliance monitoring for new emission units or emission units added through a source modification shall be implemented when operation begins.

C.10 Monitoring Methods [326 IAC 3] [40 CFR 60] [40 CFR 63]

Any monitoring or testing required by Section D or Section E of this permit shall be performed according to the provisions of 326 IAC 3, 40 CFR 60, Appendix A, 40 CFR 60 Appendix B, 40 CFR 63, or other approved methods as specified in this permit. Nothing in this permit nor in 326 IAC 3-5 supercedes the applicable monitoring provisions in 40 CFR Part 60 or 40 CFR Part 63.

C.11 Instrument Specifications [326 IAC 2-1.1-11] [326 IAC 2-7-5(3)] [326 IAC 2-7-6(1)]

(a) When specifically required by any condition of this permit, an analog instrument used to measure a parameter related to the operation of an air pollution control device shall have a scale such that the expected maximum reading for the normal range shall be no less than twenty percent (20%) of full scale unless otherwise specified in a specific in a D section condition.

(b) The Permittee may request that the IDEM, OAQ approve the use of an instrument that does not meet the above specifications provided the Permittee can demonstrate that an alternative instrument specification will adequately ensure compliance with permit conditions requiring the measurement of the parameters.

Corrective Actions and Response Steps [326 IAC 2-7-5][326 IAC 2-7-6]

C.12 Emergency Reduction Plans [326 IAC 1-5-2] [326 IAC 1-5-3]

Pursuant to 326 IAC 1-5-2 (Emergency Reduction Plans; Submission):

(a) The Permittee shall maintain the most recently submitted written emergency reduction plans (ERPs) consistent with safe operating procedures.

(b) Upon direct notification by IDEM, OAQ that a specific air pollution episode level is in effect, the Permittee shall immediately put into effect the actions stipulated in the approved ERP for the appropriate episode level. [326 IAC 1-5-3]

C.13 Risk Management Plan [326 IAC 2-7-5(11)] [40 CFR 68]

If a regulated substance, as defined in 40 CFR 68, is present at a source in more than a threshold quantity, the Permittee must comply with the applicable requirements of 40 CFR 68.

C.14 Response to Abnormal or Out-of-Range Compliance Monitoring Measurements [326 IAC 2-7-5] [326 IAC 2-7-6]

(a) Upon detecting a measurement required by a compliance monitoring condition of this permit that is outside the normal or usual range of values for the monitoring parameter, the Permittee shall restore operation of the emissions unit (including any control device and associated capture system) to its normal or usual manner of operation as

expeditiously as practicable in accordance with good air pollution control practices for minimizing emissions.

(b) The response shall include minimizing the period of any startup, shutdown or malfunction and taking any necessary corrective actions to restore normal operation and prevent the likely recurrence of the cause of abnormal or out-of-range monitoring values (other than those caused by excused startup or shutdown conditions). Corrective actions may include, but are not limited to, the following:

(1) initial inspection and evaluation;

(2) recording that operations returned to normal without operator action (such as through response by a computerized distribution control system); or

(3) any necessary follow-up actions to return operation to within the indicator range, designated condition, or below the applicable emission limitation or standard, as applicable.

(c) A determination of whether the Permittee has used acceptable procedures in response to a measurement indicating abnormal or out-of-range monitoring values will be based on information available, which may include, but is not limited to, the following:

(1) monitoring results;

(2) review of operation and maintenance procedures and records; and/or

(3) inspection of the control device, associated capture system, and the process.

(d) Failure to take reasonable response steps shall be considered a deviation from the permit.

C.15 Actions Related to Noncompliance Demonstrated by a Stack Test [326 IAC 2-7-5][326 IAC 2-7-6]

(a) When the results of a stack test performed in conformance with Section C - Performance Testing, of this permit exceed the level specified in any condition of this permit, the Permittee shall submit a description of its response actions to IDEM, OAQ, no later than seventy-five (75) days after the date of the test.

(b) A retest to demonstrate compliance shall be performed no later than one hundred eighty (180) days after the date of the test. Should the Permittee demonstrate to IDEM, OAQ that retesting in one hundred eighty (180) days is not practicable, IDEM, OAQ may extend the retesting deadline

(c) IDEM, OAQ reserves the authority to take any actions allowed under law in response to noncompliant stack tests.

The response action documents submitted pursuant to this condition do require a certification that meets the requirements of 326 IAC 2-7-6(1) by a "responsible official" as defined by 326 IAC 2-7-1(35).

Record Keeping and Reporting Requirements [326 IAC 2-7-5(3)] [326 IAC 2-7-19]

C.16 Emission Statement [326 IAC 2-7-5(3)(C)(iii)][326 IAC 2-7-5(7)][326 IAC 2-7-19(c)][326 IAC 2-6]

Pursuant to 326 IAC 2-6-3(b)(2), starting in 2005 and every three (3) years thereafter, the Permittee shall submit by July 1 an emission statement covering the previous calendar year. The emission statement shall contain, at a minimum, the information specified in 326 IAC 2-6-4(c) and shall meet the following requirements:

(1) Indicate estimated actual emissions of all pollutants listed in 326 IAC 2-6-4(a);

(2) Indicate estimated actual emissions of regulated pollutants as defined by 326 IAC 2-7-1(32) ("Regulated pollutant, which is used only for purposes of Section 19 of this rule") from the source, for purpose of fee assessment.

The statement must be submitted to:

Indiana Department of Environmental Management
Technical Support and Modeling Section, Office of Air Quality
100 North Senate Avenue
MC 61-50 IGCN 1003
Indianapolis, Indiana 46204-2251

The emission statement does require a certification that meets the requirements of 326 IAC 2-7-6(1) by a "responsible official" as defined by 326 IAC 2-7-1(35).

C.17 General Record Keeping Requirements [326 IAC 2-7-5(3)] [326 IAC 2-7-6] [326 IAC 2-2] [326 IAC 2-3]

(a) Records of all required monitoring data, reports and support information required by this permit shall be retained for a period of at least five (5) years from the date of monitoring sample, measurement, report, or application. Support information includes the following:

(AA) All calibration and maintenance records.

(BB) All original strip chart recordings for continuous monitoring instrumentation.

(CC) Copies of all reports required by the Part 70 permit.

Records of required monitoring information include the following:

(AA) The date, place, as defined in this permit, and time of sampling or measurements.

(BB) The dates analyses were performed.

(CC) The company or entity that performed the analyses.

(DD) The analytical techniques or methods used.

(EE) The results of such analyses.

(FF) The operating conditions as existing at the time of sampling or measurement.

These records shall be physically present or electronically accessible at the source location for a minimum of three (3) years. The records may be stored elsewhere for the remaining two (2) years as long as they are available upon request. If the Commissioner makes a request for records to the Permittee, the Permittee shall furnish the records to the Commissioner within a reasonable time.

(b) Unless otherwise specified in this permit, for all record keeping requirements not already legally required, the Permittee shall be allowed up to ninety (90) days from the date of permit issuance or the date of initial start-up, whichever is later, to begin such record keeping.

(c) If there is a reasonable possibility (as defined in 326 IAC 2-2-8 (b)(6)(A), 326 IAC 2-2-8 (b)(6)(B), 326 IAC 2-3-2 (l)(6)(A), and/or 326 IAC 2-3-2 (l)(6)(B)) that a "project" (as defined in 326 IAC 2-2-1(oo) and/or 326 IAC 2-3-1(jj)) at an existing emissions unit, other than projects at a source with a Plantwide Applicability Limitation (PAL), which is not part of a "major modification" (as defined in 326 IAC 2-2-1(dd) and/or 326 IAC 2-3-1(y)) may result in significant emissions increase and the Permittee elects to utilize the "projected actual emissions" (as defined in 326 IAC 2-2-1(pp) and/or 326 IAC 2-3-1(kk)), the Permittee shall comply with the following:

(1) Before beginning actual construction of the "project" (as defined in 326 IAC 2-2-1(oo) and/or 326 IAC 2-3-1(jj)) at an existing emissions unit, document and maintain the following records:

(A) A description of the project.

(B) Identification of any emissions unit whose emissions of a regulated new source review pollutant could be affected by the project.

(C) A description of the applicability test used to determine that the project is not a major modification for any regulated NSR pollutant, including:

(i) Baseline actual emissions;

(ii) Projected actual emissions;

(iii) Amount of emissions excluded under section 326 IAC 2-2-1(pp)(2)(A)(iii) and/or 326 IAC 2-3-1 (kk)(2)(A)(iii); and

(iv) An explanation for why the amount was excluded, and any netting calculations, if applicable.

(d) If there is a reasonable possibility (as defined in 326 IAC 2-2-8 (b)(6)(A) and/or 326 IAC 2-3-2 (l)(6)(A)) that a "project" (as defined in 326 IAC 2-2-1(oo) and/or 326 IAC 2-3-1(jj)) at an existing emissions unit, other than projects at a source with a Plantwide Applicability Limitation (PAL), which is not part of a "major modification" (as defined in 326 IAC 2-2-1(dd) and/or 326 IAC 2-3-1(y)) may result in significant emissions increase

and the Permittee elects to utilize the "projected actual emissions" (as defined in 326 IAC 2-2-1(pp) and/or 326 IAC 2-3-1(kk)), the Permittee shall comply with following:

(1) Monitor the emissions of any regulated NSR pollutant that could increase as a result of the project and that is emitted by any existing emissions unit identified in (1)(B) above; and

(2) Calculate and maintain a record of the annual emissions, in tons per year on a calendar year basis, for a period of five (5) years following resumption of regular operations after the change, or for a period of ten (10) years following resumption of regular operations after the change if the project increases the design capacity of or the potential to emit that regulated NSR pollutant at the emissions unit.

C.18 General Reporting Requirements [326 IAC 2-7-5(3)(C)] [326 IAC 2-1.1-11] [326 IAC 2-2]

(a) The Permittee shall submit the attached Quarterly Deviation and Compliance Monitoring Report or its equivalent. Proper notice submittal under Section B –Emergency Provisions satisfies the reporting requirements of this paragraph. Any deviation from permit requirements, the date(s) of each deviation, the cause of the deviation, and the response steps taken must be reported except that a deviation required to be reported pursuant to an applicable requirement that exists independent of this permit, shall be reported according to the schedule stated in the applicable requirement and does not need to be included in this report. This report shall be submitted not later than thirty (30) days after the end of the reporting period. The Quarterly Deviation and Compliance Monitoring Report shall include a certification that meets the requirements of 326 IAC 2-7-6(1) by a "responsible official" as defined by 326 IAC 2-7-1(35). A deviation is an exceedance of a permit limitation or a failure to comply with a requirement of the permit.

(b) The address for report submittal is:

Indiana Department of Environmental Management
Compliance and Enforcement Branch, Office of Air Quality
100 North Senate Avenue
MC 61-53 IGCN 1003
Indianapolis, Indiana 46204-2251

(c) Unless otherwise specified in this permit, any notice, report, or other submission required by this permit shall be considered timely if the date postmarked on the envelope or certified mail receipt, or affixed by the shipper on the private shipping receipt, is on or before the date it is due. If the document is submitted by any other means, it shall be considered timely if received by IDEM, OAQ on or before the date it is due.

(d) Unless otherwise specified in this permit, all reports required in Section D and Section E of this permit shall be submitted within thirty (30) days of the end of the reporting period. Unless otherwise specified in this permit, all reports shall include a certification that meets the requirements of 326 IAC 2-7-6(1) by a "responsible official" as defined by 326 IAC 2-7-1(35).

(e) Reporting periods are based on calendar years, unless otherwise specified in this permit. For the purpose of this permit "calendar year" means the twelve (12) month period from January 1 to December 31 inclusive.

(f) If the Permittee is required to comply with the recordkeeping provisions of (d) in Section C - 17 General Record Keeping Requirements for any "project" (as defined in 326 IAC 2-2-1 (oo) and/or 326 IAC 2-3-1 (jj)) at an existing emissions unit, and the project meets the following criteria, then the Permittee shall submit a report to IDEM, OAQ:

(1) The annual emissions, in tons per year, from the project identified in (c)(1) in Section C- 17 General Record Keeping Requirements exceed the baseline actual emissions, as documented and maintained under Section C-17 General Record Keeping Requirements (c)(1)(C)(i), by a significant amount, as defined in 326 IAC 2-2-1 (ww) and/or 326 IAC 2-3-1 (pp), for that regulated NSR pollutant, and

(2) The emissions differ from the preconstruction projection as documented and maintained under Section C - 17 General Record Keeping Requirements (c)(1)(C)(ii).

(g) The report required under (f) for a project at an existing emissions unit shall be submitted no later than sixty (60) days after the end of the year and contain the following:

(1) The name, address, and telephone number of the major stationary source.

(2) The annual emissions calculated in accordance with (d)(1) and (2) in Section C - 17 General Record Keeping Requirements.

(3) The emissions calculated under the actual-to-projected actual test stated in 326 IAC 2-2-2(d)(3) and/or 326 IAC 2-3-2(c)(3).

(4) Any other information that the Permittee wishes to include in this report such as an explanation as to why the emissions differ from the preconstruction projection.

Reports required in this part shall be submitted to:

Indiana Department of Environmental Management
Compliance and Enforcement Branch, Office of Air Quality
100 North Senate Avenue
MC 61-53 IGCN 1003
Indianapolis, Indiana 46204-2251

(h) The Permittee shall make the information required to be documented and maintained in accordance with (c) in Section C-17 General Record Keeping Requirements available for review upon a request for inspection by IDEM, OAQ. The general public may request this information from the IDEM, OAQ under 326 IAC 17.1.

Stratospheric Ozone Protection

C.19 Compliance with 40 CFR 82 and 326 IAC 22-1

Pursuant to 40 CFR 82 (Protection of Stratospheric Ozone), Subpart F, except as provided for motor vehicle air conditioners in Subpart B, the Permittee shall comply with applicable standards for recycling and emissions reduction.

SECTION D.1 EMISSIONS UNIT OPERATION CONDITIONS

Emissions Unit Description:

(a) A chemical development pilot plant facility and laboratories (identified as Building 110) used to develop new chemical processes and to produce new pharmaceutical compounds for subsequent use in toxicology studies and clinical trial research, with Modules A, B, C, D, E, 30 gallon A, 30 gallon B, Solids Containment and C-wing, and with process condensers.

(The information describing the process contained in this emissions unit description box is descriptive information and does not constitute enforceable conditions.)

Emission Limitations and Standards [326 IAC 2-7-5(1)]

D.1.1 Synthesized Pharmaceutical Manufacturing Operations 326 IAC 8-1-5] [326 IAC 8-5-3]

Pursuant to 326 IAC 8-1-5, CP097-3341 (the RACT plan issued on July 27, 1994), A097-5322, A097-12128, 326 IAC 8-5-3, and 40 CFR 52.770(c)(157), the Permittee shall comply with the followings:

(a) The volatile organic compound (VOC) emissions from the pilot plant in Building 110 shall be limited to less than 10 tons per twelve (12) consecutive month period rolled on a monthly basis.

(b) The primary reactor condensers shall operate during reactor venting, material transfer, distillation, and storage of filtrates in reactors, which are transferred from the filters. The primary reactor condensers working fluid inlet temperature shall be -10 degrees C or colder for mixtures that will not freeze at -10 degrees C (includes most non-aqueous streams).

(c) The emission units which have the potential to emit VOC greater than 15 pounds per day shall comply with the requirements of 326 IAC 8-5-3(b)(3) through (6).

(1) Pursuant to 326 IAC 8-5-3(b)(3), the Permittee shall provide a vapor balance system or equivalent control that is at least 90% effective in reducing emissions from truck or railcar deliveries to storage tanks, which have the potential to emit VOC greater than 15 pounds per day and which have capacities greater than seven thousand five hundred (7,500) liters (two thousand (2,000) gallons) that store VOC with vapor pressures greater than twenty-eight (28) kiloPascals (four and one-tenth (4.1) pounds per square inch) at 20 degrees C.

(2) Pursuant to 326 IAC 8-5-3(b)(3), the Permittee shall install a pressure / vacuum conservation vents set at plus or minus two-tenths (±0.2) kiloPascals on all storage tanks which have the potential to emit VOC greater than 15 pounds per day and that store VOC with vapor pressures greater than ten (10) kiloPascals (one and five-tenths (1.5) pounds per square inch) at 20 degrees C, unless a more effective control system is used.

(3) Pursuant to 326 IAC 8-5-3(b)(4), the Permittee shall enclose all centrifuges, rotary vacuum filters, and other filters which have the potential to emit VOC greater than 15 pounds per day and which have an exposed liquid surface, where the liquid contains VOC and exerts a total VOC vapor pressure of three and five-tenths (3.5)

kiloPascals (five-tenths (0.5) pounds per square inch) or more at 20 degrees C.

(4) Pursuant to 326 IAC 8-5-3(b)(5), the Permittee shall install covers on all in process tanks which have the potential to emit VOC greater than 15 pounds per day and which contain a volatile organic compound at any time. These covers must remain closed, unless production, sampling, maintenance, or inspection procedures require operator access.

(5) Pursuant to 326 IAC 8-5-3(b)(6), the Permittee shall, for the emission units which have the potential to emit VOC greater than 15 pounds per day, repair all leaks from which a liquid, containing VOC, can be observed running or dripping. The repair shall be completed the first time the equipment is off line for a period of time long enough to complete the repair.

D.1.2 Advance Approval of Modifications [326 IAC 2-7-5(15)]

The Permittee may modify any existing emission unit, replace any existing emission unit, or add a new process vessel, filter, centrifuge, dryer or any other pharmaceutical processing equipment to the operations described in this section without a source modification approval required by 326 IAC 2-7-10.5 or a permit revision required by 326 IAC 2-7-12 provided the following requirements are satisfied:

(a) All the applicable requirements for the modified, replaced or newly constructed emission unit are described or referenced in this section of the permit or in Sections B or C of this permit.

(b) The modification, replacement or construction of the emission unit does not require new or additional applicable requirements to be added to this section of the permit.

(c) The modification, replacement or construction of the emission unit does not require revision of applicable requirements in this section of the permit.

(d) The modification, replacement or construction of the emission unit does not meet the definition of a major modification as defined in 326 IAC 2-2 or 326 IAC 2-3.

Compliance Determination

D.1.3 Volatile Organic Compounds (VOC)

To determine compliance with D.1.1 (a), emissions shall be calculated by mass balance, by appropriate unit operation emissions estimation procedures (e.g., Appendix B of “Control of Volatile Organic emissions from Manufacture of Synthesized Pharmaceutical Products,” EPA-450/2-78-029), or by other generally accepted methods (e.g., AP-42 emission factors), as approved by the Commissioner.

Compliance Monitoring Requirements [326 IAC 2-7-5(1)] [326 IAC 2-7-6(1)]

D.1.4 Synthesized Pharmaceutical Manufacturing Operations [326 IAC 8-5-3]

The Permittee shall measure the primary reactor condenser working fluid temperature at least once per day when an emitting unit subject to D.1.1 (b) is in operation with VOC

D.1.5 Instrument Specifications [326 IAC 2-1.1-11] [326 IAC 2-7-5(3)] [326 IAC 2-7-6(1)]

(a) The instrument employed for the measurement of temperature shall have a scale such that the expected normal reading shall be no less than twenty percent (20%) of full scale

and be accurate within plus or minus two percent (±2%) of full scale reading.

(b) The Permittee may request that IDEM, OAQ, approve the use of an instrument that does not meet the above specifications provided the Permittee can demonstrate that an alternative instrument specification will adequately ensure compliance with permit conditions requiring the measurement.

Record Keeping and Reporting Requirements [326 IAC 2-7-5(3)] [326 IAC 2-7-19]

D.1.5 Record Keeping Requirements

(a) To document the compliance status with Condition D.1.1, the Permittee shall maintain a log of information necessary to document compliance.

(b) The Permittee shall maintain a record of the temperature measurements taken pursuant to Condition D.1.4.

D.1.6 Reporting Requirements

(a) The Permittee shall submit an annual summary of volatile organic compounds (VOC) emissions to document the compliance status with Condition D.1.1 of this permit, using the reporting form located at the end of this permit, or its equivalent. This annual report submitted by the Permittee does require a certification by a “responsible official” as defined by 326 IAC 2-7-1(35). Section C - General Reporting Requirements contains the Permittee's obligations with regard to the reporting required by this condition.

(b) The report required in (a) of this condition shall be submitted within sixty (60) days after the end of the reporting period and shall be submitted to the following address:

Indiana Department of Environmental Management
Compliance and Enforcement Branch, Office of Air Quality
100 North Senate Avenue
MC 61-53 IGCN 1003
Indianapolis, Indiana 46204-2251

SECTION D.2 EMISSIONS UNIT OPERATION CONDITIONS

Emissions Unit Description:

(b) Manufacture of bulk pharmaceutical products (Building 358) by:

(1) protein isolation with a carbon adsorber for VOC and HAP control with laboratory support;
(2) chemical synthesis,

units subject to BACT [326 IAC 8-1-6].

(The information describing the process contained in this emissions unit description box is descriptive information and does not constitute enforceable conditions.)

Emission Limitations and Standards [326 IAC 2-7-5(1)]

D.2.1 Volatile Organic Compounds (VOC) [326 IAC 8-1-6]

Pursuant to 326 IAC 8-1-6 and CP-960073-01 issued on September 25, 1996, the Permittee shall employ Best Available Control Technology (BACT):

(a) BACT for all point sources of VOC in Building 358 (shown in the table below) shall be a reduction of emissions by 95%, or to a level of 0.20 pounds per hour, whichever is less stringent, by applying air pollution control equipment.

(b) BACT for fugitive emissions shall be a Leak Detection and Repair program as described in Condition D.2.2.

(c) This requirement applies to the following equipment:

B358 equipment subject to BACT (CP 960073-01)					
Bldg.	**Stack/Vent ID**	**Emission Unit ID**	**Equipment Description**	**Maximum Capacity**	**UOM**
358	COL-2121	COL-2121	100 cm column	500 L	Liters
358	TK-4101	TK-4101	TANK	10000 L	Liters
358	TK-4111	TK-4111	TANK	10000 L	Liters
358	TK-4121	TK-4121	TANK	5000 L	Liters
358	TK-4131	TK-4131	TANK	5000 L	Liters
358	TK-4141	TK-4141	TANK	2500 L	Liters
358	TK-4151	TK-4151	TANK	2500 L	Liters
358	TK-4201	TK-4201	TANK	10000 L	Liters
358	TK-4211	TK-4211	TANK	10000 L	Liters
358	TK-4221	TK-4221	TANK	5000 L	Liters
358	TK-4231	TK-4231	TANK	5000 L	Liters
358	TK-4241	TK-4241	TANK	2500 L	Liters
358	TK-4251	TK-4251	TANK	2500 L	Liters
358	TK-1962	TK-1962	Haz. Waste tank	200 G	Gallons
358	TK-1963	TK-1963	Haz. Waste tank	200 G	Gallons
358	TK-1964	TK-1964	Haz. Waste tank	200 G	Gallons

B358 equipment subject to BACT (CP 960073-01)					
Bldg.	**Stack/Vent ID**	**Emission Unit ID**	**Equipment Description**	**Maximum Capacity**	**UOM**
358	TK-1965	TK-1965	Haz. Waste tank	200 G	Gallons

D.2.2 LDAR [326 IAC 8-1-6] [CP-960073-01]

(a) The Permittee shall implement LDAR requirement at Section E.3.3 of this permit for process components in VOC service. In VOC service means that a piece of equipment either contains or contacts a fluid (liquid or gas) that is at least 5 percent by weight a volatile organic compound (VOC). Process components are those components from the arrival of raw materials at the source to the Pharmaceutical MACT point of determination (POD).

(b) BACT for fugitive emissions from waste components in VOC service shall be the Leak Detection and Repair requirements of 40 CFR 61, Subpart V, as referenced in Section E.4.1 of this permit. In VOC service means that a piece of equipment either contains or contacts a fluid (liquid or gas) that is at least 5 percent by weight a volatile organic compound (VOC). Waste components are those components after the Pharmaceutical Production MACT point of determination (POD).

D.2.3 Synthesized Pharmaceutical Manufacturing Operations [326 IAC 8-5-3]

The bulk manufacture of pharmaceutical products by chemical synthesis takes place in a portion of Building 358. However, there are no facilities in this area with the potential to emit greater than 15 pounds per day of VOC, therefore, the requirements of 326 IAC 8-5-3 were not included in this permit.

D.2.4 Preventive Maintenance Plan [326 IAC 2-7-5(12)]

A Preventive Maintenance Plan (PMP) is required for this unit and its control device. Section B - Preventive Maintenance Plan contains the Permittee's obligations with regard to the preventive maintenance plan required by this condition.

Compliance Determination Requirements

D.2.5 Volatile Organic Compounds

To determine the compliance status with Condition D.2.1(a), the Permittee shall monitor emissions as outlined in 40 CFR 63, Subpart GGG, Sections 63.1258(b) and 63.1252 (for closed vent systems that contain bypass lines) of this permit.

Record Keeping Requirements

D.2.6 Record Keeping Requirements

To document the compliance status with Condition D.2.1(a), during periods when the source is not in operation using hazardous air pollutants, such that 40 CFR Part 63, Subpart GGG requirements do not apply, the Permittee shall maintain a log of information necessary to document compliance.

SECTION D.3 EMISSIONS UNIT OPERATION CONDITIONS

Emissions Unit Description:

(c) Manufacture of bulk pharmaceutical products (Building 358) by:

(1) protein isolation with laboratory support;
(2) chemical synthesis, or non-synthesized chemical processes;

units not subject to BACT [326 IAC 8-1-6].

(The information describing the process contained in this emissions unit description box is descriptive information and does not constitute enforceable conditions.)

Emission Limitations and Standards [326 IAC 2-7-5(1)]

D.3.1 Advance Approval of Modifications [326 IAC 2-7-5(15)]

The Permittee may modify any existing emission unit, replace any existing emission unit, or add a new process vessel, filter, centrifuge, dryer or any other pharmaceutical processing equipment to the operations described in this section without a source modification approval required by 326 IAC 2-7-10.5 or a permit revision required by 326 IAC 2-7-12 provided the following requirements are satisfied:

(a) All the applicable requirements for the modified, replaced or newly constructed emission unit are described or referenced in this section of the permit or in Sections B, C and E.3 of this permit.

(b) The modification, replacement or construction of the emission unit does not require new or additional applicable requirements to be added to this section of the permit.

(c) The modification, replacement or construction of the emission unit does not require revision of applicable requirements in this section of the permit.

(d) The modification, replacement or construction of the emission unit does not meet the definition of a major modification as defined in 326 IAC 2-2-1 or 326 IAC 2-3-1.

D.3.2 Synthesized Pharmaceutical Manufacturing Operations [326 IAC 8-5-3]

The bulk manufacture of pharmaceutical products by chemical synthesis takes place in a portion of Building 358. However, there are no facilities in this area with the potential to emit greater than 15 pounds per day of VOC; therefore, the requirements of 326 IAC 8-5-3 do not apply.

SECTION D.4 EMISSIONS UNIT OPERATION CONDITIONS

Emissions Unit Description:

(d) The BHI area consists of five buildings (building 132, 133, 134, 138 and 142) where manufacturing of bulk pharmaceutical products through chemical synthesis takes place using condensers and a scrubber as VOC control.

(The information describing the process contained in this emissions unit description box is descriptive information and does not constitute enforceable conditions.)

Emission Limitations and Standards [326 IAC 2-7-5(1)]

D.4.1 Prevention of Significant Deterioration Minor Limit [326 IAC 2-2][40 CFR 52.21]

Pursuant to Permit Number CP 910072-01 issued on October 2, 1991 and Amendment A072-0001 issued on June 3, 1997, VOC emissions from Buildings 132, 133 and 138 are limited to less than 40 tons per 12 consecutive month period with compliance determined at the end of each month such that 326 IAC 2-2 is not applicable.

D.4.2 Leak Detection and Repair [326 IAC 2-2] [40 CFR 52.21] [40 CFR 63 Subpart GGG]

Pursuant to CP-910072-01 and Amendment A072-0001, the Permittee shall implement leak detection and repair (LDAR) for pumps, valves, and connectors in VOC service in buildings 132, 133, and 138. The LDAR requirements are described in Conditions E.3.3. In VOC service means that a piece of equipment either contains or contacts a fluid (liquid or gas) that is at least ten (10) percent by weight a volatile organic compound (VOC).

(a) On or before December 31, 2011, the Permittee shall complete all required monitoring for the current monitoring period, and shall close the current monitoring periods for valves and connectors on December 31, 2011.

(b) The Permittee shall begin new monitoring periods for valves and for connectors on January 1, 2012.

(c) The Permittee may revise the “process or group of processes” used for leak rate calculations on January 1, 2012.

D.4.3 Particulate Emission Limitation for Manufacturing Processes [326 IAC 6-3-2]

Pursuant to 326 IAC 6-3-2 (Particulate Emissions Limitations for Manufacturing Processes), the allowable particulate emission rate from the urea prills unloading operation shall meet the particulate emission rate established by the equation below. The urea prills unloading operation shall not exceed 47.2 pounds per hour when operating at a process weight rate of 66 tons per hour. A particulate scrubber is an intergral part of the urea prill unloading process and will operate at all times this process is in operation.

The pounds per hour limitation was calculated with the following equation:

Interpolation of the data for the process weight rate up to 60,000 pounds per hour shall be accomplished by use of the equation:

$E = 4.10\ P^{0.67}$ where E= rate of emission in pounds per hour; and
P = process weight rate in tons per hour”

Or

Interpolation and extrapolation of the data for the process weight rate in excess of 60,000 pounds per hour shall be accomplished by use of the equation:

$E = 55.0\ P^{0.11} - 40$ where E = rate of emission in pounds per hour; and P = process weight rate in tons per hour

D.4.4 Synthesized Pharmaceutical Manufacturing Operations [326 IAC 8-5-3]

(a) Volatile organic compound emissions from all reactors, distillation operations, crystallizers, centrifuges, and vacuum dryers, which have the potential to emit VOC greater than 15 pounds per day, shall be controlled by surface condensers or equivalent controls.

(1) If surface condensers are used, the condenser outlet gas temperature must not exceed minus twenty five degrees Celsius (-25 ^{o}C) when condensing VOC of vapor pressure greater than forty (40) kilo Pascals (5.8 pounds per square inch);

(2) If surface condensers are used, the condenser outlet gas temperature must not exceed minus fifteen degrees Celsius (-15 ^{o}C) when condensing VOC of vapor pressure greater than twenty (20) kilo Pascals (2.9 pounds per square inch);

(3) If surface condensers are used, the condenser outlet gas temperature must not exceed zero degrees Celsius (0 ^{o}C) when condensing VOC of vapor pressure greater than ten (10) kilo Pascals (1.5 pounds per square inch);

(4) If surface condensers are used, the condenser outlet gas temperature must not exceed ten degrees Celsius (10 ^{o}C) when condensing VOC of vapor pressure greater than seven (7) kilo Pascals (1 pound per square inch);

(5) If surface condensers are used, the condenser outlet gas temperature must not exceed twenty five degrees Celsius (25 ^{o}C) when condensing VOC of vapor pressure greater than three and a half (3.5) kilo Pascals (0.5 pound per square inch);

(6) The vapor pressures listed in (1) through (5) above shall be measured at twenty degrees Celsius (20 ^{o}C).

(7) If equivalent controls are used, the Volatile Organic Compound emissions must be reduced by at least as much as they would be by using a surface condenser which meets the requirements of (1) through (5) above.

(b) Pursuant to 326 IAC 8-5-3(b)(2), VOC emissions from all air dryers and production equipment exhaust systems which have the potential to emit VOC greater than 15 pounds per day shall be reduced:

(1) by at least ninety percent (90%) if emissions are one hundred fifty (150) kilograms per day (three hundred thirty (330) pounds per day) or more of VOC; or

(2) to fifteen (15) kilograms per day (thirty three (33) pounds per day) or less if emissions are less than one hundred fifty (150) kilograms per day (three hundred thirty (330) pounds per day) of VOC.

(c) Pursuant to 326 IAC 8-5-3(b)(3)(A), the Permittee shall provide a vapor balance system or equivalent control that is at least 90% effective in reducing emissions from truck or railcar deliveries to storage tanks, which have the potential to emit VOC greater than 15 pounds per day and which have capacities greater than seven thousand five hundred (7,500) liters (two thousand (2,000) gallons) that store VOC with vapor pressures greater than twenty-eight (28) kiloPascals (four and one-tenth (4.1) pounds per square inch) at 20 degrees C.

(d) Pursuant to 326 IAC 8-5-3(b)(3)(B), the Permittee shall install a pressure / vacuum conservation vents set at plus or minus two-tenths (±0.2) kiloPascals on all storage tanks which have the potential to emit VOC greater than 15 pounds per day and that store VOC with vapor pressures greater than ten (10) kiloPascals (one and five-tenths (1.5) pounds per square inch) at 20 degrees C, unless a more effective control system is used.

(e) Pursuant to 326 IAC 8-5-3(b)(4), the Permittee shall enclose all centrifuges, rotary vacuum filters, and other filters which have the potential to emit VOC greater than 15 pounds per day and which have an exposed liquid surface, where the liquid contains VOC and exerts a total VOC vapor pressure of three and five-tenths (3.5) kiloPascals (five-tenths (0.5) pounds per square inch) or more at 20 degrees C.

(f) Pursuant to 326 IAC 8-5-3(b)(5), the Permittee shall install covers on all inprocess tanks which have the potential to emit VOC greater than 15 pounds per day and which contain a volatile organic compound at any time. These covers must remain closed, unless production, sampling, maintenance, or inspection procedures require operator access.

(g) Pursuant to 326 IAC 8-5-3(b)(6), the Permittee shall, for the emission units which have the potential to emit VOC greater than 15 pounds per day, repair all leaks from which a liquid, containing VOC, can be observed running or dripping. The repair shall be completed the first time the equipment is off line for a period of time long enough to complete the repair.

D.4.5 Advance Approval of Modifications [326 IAC 2-7-5(15)]

The Permittee may modify any existing emission unit, replace any existing emission unit, or add a new process vessel, filter, centrifuge, dryer or any other pharmaceutical processing equipment to the operations described in this section without a source modification approval required by 326 IAC 2-7-10.5 or a permit revision required by 326 IAC 2-7-12 provided the following requirements are satisfied:

(a) All the applicable requirements for the modified, replaced or newly constructed emission unit are described or referenced in this section of the permit or in Sections B, C and E.3 of this permit.

(b) The modification, replacement or construction of the emission unit does not require new or additional applicable requirements to be added to this section of the permit.

(c) The modification, replacement or construction of the emission unit does not require revision of applicable requirements in this section of the permit.

(d) The modification, replacement or construction of the emission unit does not meet the definition of a major modification as defined in 326 IAC 2-2 or 326 IAC 2-3.

D.4.6 Preventive Maintenance Plan [326 IAC 2-7-5(12)]

A Preventive Maintenance Plan (PMP) is required for emission units and control devices subject to Condition D.4.4 - Synthesized Pharmaceutical Manufacturing Operations [326 IAC 8-5-3]. Section B - Preventive Maintenance Plan contains the Permittee's obligations with regard to the preventive maintenance plan required by this condition.

Compliance Determination

D.4.7 Volatile Organic Compounds (VOC)

Source emissions shall be calculated by mass balance, by appropriate unit operation emissions estimation procedures (e.g., Appendix B of “Control of Volatile Organic emissions from Manufacture of Synthesized Pharmaceutical Products,” EPA-450/2-78-029), or by other generally accepted methods (e.g., AP-42 emission factors), as approved by the Commissioner to determine compliance with D.4.3.

Compliance Monitoring Requirements [326 IAC 2-7-5(1)] [326 IAC 2-7-6(1)]

D.4.8 Synthesized Pharmaceutical Manufacturing Operations [326 IAC 8-5-3]

(a) For emitting units, subject to Condition D.4.4, controlled by a surface condenser, the Permittee shall record the condenser outlet gas temperature at least once per batch when the emitting unit is in operation.

(b) For emitting units, subject to Condition D.4.4, controlled by a scrubber, the Permittee shall record the recirculation flow rate at least once per batch when the emitting unit is in operation.

D.4.9 Instrument Specifications [326 IAC 2-1.1-11] [326 IAC 2-7-5(3)] [326 IAC 2-7-6(1)]

(a) The instrument employed for the measurement of temperature as required by Conditions D.4.4 and D.4.8 shall have a scale such that the expected normal reading shall be no less than five percent (5%) of full scale and be accurate within plus or minus 2.5°C.

(b) The instrument employed for the measurement of flowrate as required by Condition D.4.8 shall be accurate within plus or minus ten percent (10%) of design flow rate.

(c) The Permittee may request that IDEM, OAQ approve the use of an instrument that does not meet the above specifications provided the Permittee can demonstrate that an alternative instrument specification will adequately ensure compliance with permit conditions requiring the measurement.

Record Keeping and Reporting Requirements [326 IAC 2-7-5(3)] [326 IAC 2-7-19]

D.4.10 Record Keeping Requirements

(a) To document the compliance status with Condition D.4.2, the Permittee shall keep records as described in Section E.3.3 (citing to 40 CFR 63.1255 of this permit) for pumps, valves and connectors in VOC service.

(b) To document the compliance status with Condition D.4.1, the Permittee shall keep a record of the weight of VOCs emitted each month. Records necessary to demonstrate compliance shall be available within 30 days of the end of each month.

(c) To document the compliance status with Conditions D.4.4 and D.4.8, the Permittee is required to:

(1) Keep an on-site log of emitting units subject to Condition D.4.4, the condensing VOC vapor pressure, the respective control device, and the applicable limitation.

(2) Keep records of once per batch temperature as per Condition D.4.8 for surface condensers subject to Condition D.4.4.

(3) Keep records of once per batch liquid flow rates as per Condition D.4.8 for scrubbers subject to Condition D.4.4.

(d) Section C - General Record Keeping Requirements contains the Permittee's obligations with regard to the record keeping required by this condition.

D.4.11 Reporting Requirements

(a) A quarterly summary of the information to document the compliance status with Condition D.4.1 shall be submitted according to Section C - General Reporting Requirements.

(b) To document the compliance status with Condition D.4.2, the Permittee shall submit reports as described in 40 CFR 63, Subpart GGG for fugitive emission components in VOC service. If, per Section D.4.2, the Permittee revises the “process or group of processes,” as of January 1, 2012, an explanation shall be included with the next report submitted under this section.

SECTION D.5 EMISSIONS UNIT OPERATION CONDITIONS

Emissions Unit Description:

(e) Building 130 Complex (buildings 130, 135 and 136) consisting of laboratories and manufacturing of bulk pharmaceutical products through chemical synthesis.

(The information describing the process contained in this emissions unit description box is descriptive information and does not constitute enforceable conditions.)

Emission Limitations and Standards [326 IAC 2-7-5(1)]

D.5.1 Particulate Emission Limitations for Manufacturing Processes [326 IAC 6-3-2]

Pursuant to 326 IAC 6-3-2 (Particulate Emission Limitations for Manufacturing Processes), the allowable particulate emission rate from the urea prills unloading operation located in Building 130 shall meet the particulate emission rate established by the equation below. The urea prills unloading operation shall not exceed 27.0 pounds per hour when operating at a process weight rate of 16.7 tons per hour. A scrubber is integral to the urea prill unloading process and will operate at all times this facility is in operation. The pounds per hour limitation was calculated with the following equation:

Interpolation of the data for the process weight rate up to 60,000 pounds per hour shall be accomplished by use of the equation:

$E = 4.10\ P^{0.67}$ where E = rate of emission in pounds per hour; and
P = process weight rate in tons per hour

D.5.2 Synthesized Pharmaceutical Manufacturing Operations [326 IAC 8-5-3]

(a) Volatile organic compound emissions from all reactors, distillation operations, filters, crystallizers, centrifuges, and vacuum dryers, which have the potential to emit VOC greater than 15 pounds per day, shall be controlled by surface condensers or equivalent controls.

(1) If surface condensers are used, the condenser outlet gas temperature must not exceed minus twenty five degrees Celsius (-25 ^{o}C) when condensing VOC of vapor pressure greater than forty (40) kilo Pascals (5.8 pounds per square inch);

(2) If surface condensers are used, the condenser outlet gas temperature must not exceed minus fifteen degrees Celsius (-15 ^{o}C) when condensing VOC of vapor pressure greater than twenty (20) kilo Pascals (2.9 pounds per square inch);

(3) If surface condensers are used, the condenser outlet gas temperature must not exceed zero degrees Celsius (0 ^{o}C) when condensing VOC of vapor pressure greater than ten (10) kilo Pascals (1.5 pounds per square inch);

(4) If surface condensers are used, the condenser outlet gas temperature must not exceed ten degrees Celsius (10 ^{o}C) when condensing VOC of vapor pressure greater than seven (7) kilo Pascals (1 pound per square inch);

(5) If surface condensers are used, the condenser outlet gas temperature must not exceed twenty five degrees Celsius (25 ^{o}C) when condensing VOC of vapor

pressure greater than three and a half (3.5) kilo Pascals (0.5 pound per square inch);

(6) The vapor pressures listed in (1) through (5) above shall be measured at twenty degrees Celsius (20 ^{o}C).

(7) If equivalent controls are used, the Volatile Organic Compound emissions must be reduced by at least as much as they would be by using a surface condenser which meets the requirements of (1) through (5) above.

(b) Pursuant to 326 IAC 8-5-3(b)(2), VOC emissions from all air dryers and production equipment exhaust systems which have the potential to emit VOC greater than 15 pounds per day shall be reduced:

(1) by at least ninety percent (90%) if emissions are one hundred fifty (150) kilograms per day (three hundred thirty (330) pounds per day) or more of VOC; or

(2) to fifteen (15) kilograms per day (thirty three (33) pounds per day) or less if emissions are less than one hundred fifty (150) kilograms per day (three hundred thirty (330) pounds per day) of VOC.

(c) Pursuant to 326 IAC 8-5-3(b)(3)(A), the Permittee shall provide a vapor balance system or equivalent control that is at least 90% effective in reducing emissions from truck or railcar deliveries to storage tanks, which have the potential to emit VOC greater than 15 pounds per day and which have capacities greater than seven thousand five hundred (7,500) liters (two thousand (2,000) gallons) that store VOC with vapor pressures greater than twenty-eight (28) kiloPascals (four and one-tenth (4.1) pounds per square inch) at 20 degrees C.

(d) Pursuant to 326 IAC 8-5-3(b)(3)(B), the Permittee shall install a pressure / vacuum conservation vents set at plus or minus two-tenths (±0.2) kiloPascals on all storage tanks which have the potential to emit VOC greater than 15 pounds per day and that store VOC with vapor pressures greater than ten (10) kiloPascals (one and five-tenths (1.5) pounds per square inch) at 20 degrees C, unless a more effective control system is used.

(e) Pursuant to 326 IAC 8-5-3(b)(4), the Permittee shall enclose all centrifuges, rotary vacuum filters, and other filters which have the potential to emit VOC greater than 15 pounds per day and which have an exposed liquid surface, where the liquid contains VOC and exerts a total VOC vapor pressure of three and five-tenths (3.5) kiloPascals (five-tenths (0.5) pounds per square inch) or more at 20 degrees C.

(f) Pursuant to 326 IAC 8-5-3(b)(5), the Permittee shall install covers on all inprocess tanks which have the potential to emit VOC greater than 15 pounds per day and which contain a volatile organic compound at any time. These covers must remain closed, unless production, sampling, maintenance, or inspection procedures require operator access.

(g) Pursuant to 326 IAC 8-5-3(b)(6), the Permittee shall, for the emission units which have the potential to emit VOC greater than 15 pounds per day, repair all leaks from which a liquid, containing VOC, can be observed running or dripping. The repair shall be completed the first time the equipment is off line for a period of time long enough to complete the repair.

D.5.3 Advance Approval of Modifications [326 IAC 2-7-5(15)]

The Permittee may modify any existing emission unit, replace any existing emission unit, or add a new process vessel, filter, centrifuge, dryer or any other pharmaceutical processing equipment to

the operations described in this section without a source modification approval required by 326 IAC 2-7-10.5 or a permit revision required by 326 IAC 2-7-12 provided the following requirements are satisfied:

(a) All the applicable requirements for the modified, replaced or newly constructed emission unit are described or referenced in this section of the permit or in Sections B, C and E.3 of this permit.

(b) The modification, replacement or construction of the emission unit does not require new or additional applicable requirements to be added to this section of the permit.

(c) The modification, replacement or construction of the emission unit does not require revision of applicable requirements in this section of the permit.

(d) The modification, replacement or construction of the emission unit does not meet the definition of a major modification as defined in 326 IAC 2-2-1 or 326 IAC 2-3-1.

D.5.4 Preventive Maintenance Plan [326 IAC 2-7-5(12)]

A Preventive Maintenance Plan (PMP) is required for emission units and control devices subject to Condition D.5.2 - Synthesized Pharmaceutical Manufacturing Operations [326 IAC 8-5-3]. Section B - Preventive Maintenance Plan contains the Permittee's obligations with regard to the preventive maintenance plan required by this condition.

Compliance Monitoring Requirements [326 IAC 2-7-5(1)] [326 IAC 2-7-6(1)]

D.5.5 Synthesized Pharmaceutical Manufacturing Operations [326 IAC 8-5-3]

(a) For emitting units, subject to Condition D.5.2, controlled by a surface condenser, the Permittee shall record the condenser outlet gas temperature at least once per batch when the emitting unit is in operation.

(b) For emitting units, subject to Condition D.5.2, controlled by a scrubber, the Permittee shall record the recirculation flow rate at least once per batch when the emitting unit is in operation.

D.5.6 Instrument Specifications [326 IAC 2-1.1-11] [326 IAC 2-7-5(3)] [326 IAC 2-7-6(1)]

(a) The instrument employed for the measurement of temperature as required by Conditions D.5.2 and D.5.5 shall have a scale such that the expected normal reading shall be no less than five percent (5%) of full scale and be accurate within plus or minus 2.5°C.

(b) The instrument employed for the measurement of flowrate as required by Condition D.5.5 shall be accurate within plus or minus ten percent (10%) of design flow rate.

(c) The Permittee may request that IDEM, OAQ approve the use of an instrument that does not meet the above specifications provided the Permittee can demonstrate that an alternative instrument specification will adequately ensure compliance with permit conditions requiring the measurement.

Record Keeping and Reporting Requirements [326 IAC 2-7-5(3)] [326 IAC 2-7-19]

D.5.7 Record Keeping Requirements

(a) To document the compliance status with Conditions D.5.2 and D.5.5, the Permittee is required to:

(1) Keep an on-site log of emitting units subject to Condition D.5.2 the condensing VOC vapor pressure, the respective control device, and the applicable limitation.

(2) Keep records of once per batch temperature as per Condition D.5.5 for surface condensers subject to Condition D.5.2.

(3) Keep records of once per batch liquid flow rates as per Condition D.5.5 for scrubbers subject to Condition D.5.2.

(b) Section C - General Record Keeping Requirements contains the Permittee's obligations with regard to the record keeping required by this condition.

SECTION D.6 EMISSIONS UNIT OPERATION CONDITIONS

Emissions Unit Description:

Entire Source

(The information describing the process contained in this emissions unit description box is descriptive information and does not constitute enforceable conditions.)

Emission Limitations and Standards [326 IAC 2-7-5(1)]

D.6.1 Architectural and Industrial Maintenance (AIM) [326 IAC 8-14]

Pursuant to 326 IAC 8-14, on and after October 1, 2011, the Permittee shall comply with the applicable standards for Architectural and Industrial Maintenance (AIM) Coatings. 326 IAC 8-14 is not Federally enforceable.

D.6.2 Work Practices [326 IAC 8-14-3]

The Permittee shall comply with the following work practices:

(1) All AIM coatings containers used to apply the contents therein to a surface directly from the container by:
(A) pouring;
(B) siphoning;
(C) brushing;
(D) rolling;
(E) padding;
(F) ragging; or
(G) other means;
shall be closed when not in use.

(2) Containers of any VOC-containing materials used for thinning and cleanup shall be closed when not in use.

Record Keeping and Reporting Requirements [326 IAC 2-7-5(3)] [326 IAC 2-7-19]

D.6.3 Record Keeping Requirements

(a) To document the compliance status with Condition D.6.1, any person subject to this rule who applies traffic marking material shall maintain the following records:

(1) Types and amounts of traffic marking materials purchased annually.

(2) The VOC content or emission rate of each type of traffic marking material applied in any of the following:

(A) Grams per liter.
(B) Pounds per gallon.
(C) Kilograms per stripe-kilometer.
(D) Pounds per stripe-mile.

(3) Monthly quantities of each type of traffic marking material applied.

(b) Section C - General Record Keeping Requirements contains the Permittee's obligations with regard to the record keeping required by this condition.

SECTION D.7 EMISSIONS UNIT OPERATION CONDITIONS

Emissions Unit Description:

(a) Degreasing operations that do not exceed 145 gallons per 12 months, except if subject to 326 IAC 20-6. [326 IAC 8-3]

(b) Activities with emissions equal to or less than insignificant thresholds: Cold cleaner degreasers that use more than 145 gallons per year, but have emissions less than 15 pounds per day of VOC. [326 IAC 8-3-2]

(The information describing the process contained in this emissions unit description box is descriptive information and does not constitute enforceable conditions.)

Emission Limitations and Standards [326 IAC 2-7-5(1)]

D.7.1 Volatile Organic Compounds (VOC) [326 IAC 8-3-2]

Pursuant to 326 IAC 8-3-2 (Cold Cleaner Operations), for cold cleaning operations constructed after January 1, 1980, the Permittee shall:

(a) Equip the cleaner with a cover;

(b) Equip the cleaner with a facility for draining cleaned parts;

(c) Close the degreaser cover whenever parts are not being handled in the cleaner;

(d) Drain cleaned parts for at least fifteen (15) seconds or until dripping ceases;

(e) Provide a permanent, conspicuous label summarizing the operation requirements;

(f) Store waste solvent only in covered containers and not dispose of waste solvent or transfer it to another party, in such a manner that greater than twenty percent (20%) of the waste solvent (by weight) can evaporate into the atmosphere.

D.7.2 Volatile Organic Compounds (VOC) (Cold Cleaner Degreaser Operation and Control) [326 IAC 8-3-5]

(a) Pursuant to 326 IAC 8-3-5(a) (Cold Cleaner Degreaser Operation and Control), the owner or operator of cold cleaner degreasers without remote solvent reservoirs existing as of January 1, 1980, located in Clark, Elkhart, Floyd, Lake, Marion, Porter or St. Joseph counties, or constructed after July 1, 1990, located in any county, shall ensure that the following requirements are met:

(1) Equip the degreaser with a cover. The cover must be designed so that it can be easily operated with one (1) hand if:

(A) The solvent volatility is greater than two (2) kiloPascals (fifteen (15) millimeters of mercury or three-tenths (0.3) pounds per square inch)

measured at thirty-eight degrees Celsius (38° C) (one hundred degrees Fahrenheit (100° F));

(B) The solvent is agitated; or

(C) The solvent is heated.

(2) Equip the degreaser with a facility for draining cleaned articles. If the solvent volatility is greater than four and three-tenths (4.3) kiloPascals (thirty-two (32) millimeters of mercury or six-tenths (0.6) pounds per square inch) measured at thirty-eight degrees Celsius (38°C) (one hundred degrees Fahrenheit (100° F)), then the drainage facility must be internal such that articles are enclosed under the cover while draining. The drainage facility may be external for applications where an internal type cannot fit into the cleaning system.

(3) Provide a permanent, conspicuous label which lists the operating requirements outlined in subsection (b).

(4) The solvent spray, if used, must be a solid, fluid stream and shall be applied at a pressure which does not cause excessive splashing.

(5) Equip the degreaser with one (1) of the following control devices if the solvent volatility is greater than four and three-tenths (4.3) kiloPascals (thirty-two (32) millimeters of mercury or six-tenths (0.6) pounds per square inch) measured at thirty-eight degrees Celsius (38°C) (one hundred degrees Fahrenheit (100°F)), or if the solvent is heated to a temperature greater than forty-eight and nine-tenths degrees Celsius (48.9°C) (one hundred twenty degrees Fahrenheit (120°F)):

(A) A freeboard that attains a freeboard ratio of seventy-five hundredths (0.75) or greater.

(B) A water cover when solvent is used is insoluble in, and heavier than water.

(C) Other systems of demonstrated equivalent control such as a refrigerated chiller or carbon adsorption. Such systems shall be submitted to the U.S. EPA as a SIP revision.

(b) Pursuant to 326 IAC 8-3-5(b) (Cold Cleaner Degreaser Operation and Control), the owner or operator of a cold cleaning facility shall ensure that the following operating requirements are met:

(1) Close the cover whenever articles are not being handled in the degreaser.

(2) Drain cleaned articles for at least fifteen (15) seconds or until dripping ceases.

(3) Store waste solvent only in covered containers and prohibit the disposal or transfer of waste solvent in any manner in which greater than twenty percent (20%) of the waste solvent by weight could evaporate.

D.7.3 Advance Approval of Modifications [326 IAC 2-7-5(15)]

The Permittee may modify any existing degreasing operation, replace any existing degreasing operation, or add a new degreasing operation without a source modification approval required by 326 IAC 2-7-10.5 or a permit revision required by 326 IAC 2-7-12 or 326 IAC 2-7-11 provided the following requirements are satisfied:

(a) All the applicable requirements for the modified, replaced or newly constructed emission unit are described or referenced in this section of the permit or in Sections B and C of this permit.

(b) The modification, replacement or construction of the emission unit does not require new or additional applicable requirements to be added to this section of the permit.

(c) The modification, replacement or construction of the emission unit does not require revision of applicable requirements in this section of the permit.

(d) The modification does not modify the degreasing operations to greater than 145 gallons per 12 months, except if subject to 326 IAC 20-6.

(e) Any new degreasing operation does not exceed 145 gallons per 12 months, except if subject to 326 IAC 20-6.

SECTION E.1 EMISSIONS UNIT OPERATION CONDITIONS

Emissions Unit Description:

(g) Emergency Generators and fire pumps including those below:

Bldg.	Name & if Fire Pump	Manufacturer/ Model	Nominal Capacity	Units	Fuel	CI or SI	Date/Year Installed or Mfd.	NSPS New; Meet 60.4204	RICE MACT
B 134	B 134	Cummins 100DGDBL36421A	166	HP	No.2 oil	CI	1991	No; N/A	Existing
B152	B 152	Cummins 800DFJB	1200	HP	No.2 oil	CI	Before 2002	No; N/A	Existing
B 185	B185 Fire Pump #1	Caterpillar 3406B DI	375	HP	No.2 oil	CI	1990	No; N/A	Existing
B 185	B185 Fire Pump #2	Caterpillar 3406B DI	375	HP	No.2 oil	CI	1990	No; N/A	Existing
B 314	B314	Cummins 200DFAA	380	HP	No.2 oil	CI	1997	No; N/A	Existing
B 360	B 360	Cummins 60CSFAD	145	HP	No.2 oil	CI	2011	Yes; Yes	New
B 180	B 180	Cummins DGDB-4476255	155	HP	No.2 oil	CI	2007 (manufactured 2000)	No; N/A	Existing
B 359	B 359 Fire House	GM Gaseous Engine 3 L 4 cylinder	20	KW	Natural Gas	SI	20006	No; N/A	Existing
B141	B141 A	Cummins DFHD	1350	HP	No. 2 oil	CI	1999	No; N/A	Existing
B141	B141 B	Cummins DFJD	1350	HP	No. 2 oil	CI	2001	No; N/A	Existing
B141	B141 C	Cummins DQKC	2700	HP	No. 2 oil	CI	2006	No; N/A	New
B141	B141 D	Cummins SAK60-G6 NR2	2922	HP	No. 2 oil	CI	2010	Yes; Yes	New
B 314	B314 Unit 2	Cummins 200 DSGAE	324	HP	No. 2 oil	CI	2013	Yes; No	New
B 359	B 359 Fire House	TBD	0.25 (383)	MW (HP)	Natural Gas	SI	2013	Yes Yes	New

This is an affected source under 40 CFR 63, Subpart ZZZZ.

(The information describing the process contained in this emissions unit description box is descriptive information and does not constitute enforceable conditions.)

National Emission Standards For Hazardous Air Pollutants [40 CFR 63]

E.1.1 General Provisions Relating to National Emission Standards for Hazardous Air Pollutants under 40 CFR Part 63 [326 IAC 20-1] [40 CFR Part 63, Subpart A]

Pursuant to 40 CFR 63.6665, the Permittee shall comply with the provisions of 40 CFR Part 63, Subpart A – General Provisions, which are incorporated by reference as 326 IAC 20-1-1 in accordance with the schedule in 40 CFR 63 Subpart ZZZZ.

E.1.2 Provisions Relating to National Emissions Standards for Hazardous Air Pollutants for Stationary Reciprocating Internal Combustion Engines [326 IAC 20-82-1] [40 CFR Part 63, Subpart ZZZZ]

Pursuant to CFR Part 63, Subpart ZZZZ, the Permittee shall comply with the provisions of 40 CFR Part 63.6590, for the affected source, as specified as follows:

(a) Emergency Compression Ignition engines with a site rating of > 500 brake horsepower (HP) constructed or reconstructed before December 19, 2002 ("existing") shall meet the following requirements:

40 CFR 63.6600(c)
40 CFR 63.6605
40 CFR 63.6640(e)
40 CFR 63.6640(f)(2)
40 CFR 63.6645(a)(5)
40 CFR 63.6650(f)
40 CFR 63.6655(e)

(b) Emergency Engines with a site rating of less than or equal to 500 brake HP, constructed or reconstructed before June 12, 2006 ("existing"), shall meet the following requirements on and after May 3, 2013:

40 CFR 63.6602
40 CFR 63.6605
40 CFR 63.6625(e)
40 CFR 63.6625(f)
40 CFR 63.6625(j)
40 CFR 63.6640(a)
40 CFR 63.6640(b)
40 CFR 63.6640(e)
40 CFR 63.6640(f)(1)
40 CFR 63.6645(a)(5)
40 CFR 63.6650(f)
40 CFR 63.6655(d) and (e)
40 CFR 63.6655(f)
40 CFR 63.6660
40 CFR 63.6665

(c) Emergency Stationary Reciprocating Internal Combustion engines with a site rating of less than or equal to 500 brake HP, constructed or reconstructed on or after June 12, 2006 ("new"), shall meet the following requirements:

40 CFR 63.6590(c)(6)

(d) Emergency Stationary Reciprocating Internal Combustion engines with a site rating of > 500 brake horsepower (HP) constructed or reconstructed on or after December 19, 2002 ("new") shall meet the following requirements:

40 CFR 63.6600(c)
40 CFR 63.6605
40 CFR 63.6640(e)
40 CFR 63.6640(f)
40 CFR 63.6645(c)
40 CFR 63.6645(f)
40 CFR 63.6650(f)

E.1.3 Advance Approval of Modifications [326 IAC 2-7-5(15)]

The Permittee may modify any existing emission unit, replace any existing emission unit, or add an emergency engine or fire pump without a source modification approval required by 326 IAC 2-7-10.5 or a permit revision required by 326 IAC 2-7-12 provided the following requirements are satisfied:

(a) All the applicable requirements for the modified, replaced or newly constructed emission unit are described or referenced in this section of the permit or in Sections B and C of this permit.

(b) The modification, replacement or construction of the emission unit does not require new or additional applicable requirements to be added to this section of the permit.

(c) The modification, replacement or construction of the emission unit does not require revision of applicable requirements in this section of the permit.

(d) The modification, replacement or construction of the emission unit does not meet the definition of a major modification as defined in 326 IAC 2-2-1 or 326 IAC 2-3-1.

SECTION E.2 EMISSIONS UNIT OPERATION CONDITIONS

Emissions Unit Description:

(g) Emergency Generators and fire pumps including those below:

Bldg.	Name & if Fire Pump	Manufacturer/ Model	Nominal Capacity	Units	Fuel	CI or SI	Date/Year Installed or Mfd.	NSPS New; Meet 60.4204	RICE MACT
B 360	B 360	Cummins 60CSFAD	145	HP	No.2 oil	CI	2011	Yes; Yes	New
B141	B141 D	Cummins SAK60-G6 NR2	2922	HP	No. 2 oil	CI	2010	Yes; Yes	New
B314	B314 Unit 2	Cummins 200DSGAE	324	HP	No. 2 oil	CI	2013	Yes; No	New

This is an affected source under 40 CFR 60, Subpart IIII.

(The information describing the process contained in this emissions unit description box is descriptive information and does not constitute enforceable conditions.)

New Source Performance Standards [40 CFR Part 60]

E.2.1 General Provisions Relating to NSPS IIII [326 IAC 12][40 CFR Part 60, Subpart A]

The provisions of 40 CFR Part 60, Subpart A – General Provisions, which are incorporated by reference in 326 IAC 12-1, apply to the emergency Generators and fire pumps described in this section and all emergency Stationary Compression Ignition Internal Combustion Engines (CI ICE) manufactured after April 1, 2006, except fire pump engines, and to fire pump engines manufactured after July 1, 2006, and to all CI ICE reconstructed or modified after July 11, 2005, except when otherwise specified in 40 CFR Part 60, Subpart IIII.

E.2.2 Standards of Performance for Stationary Compression Ingnition Internal Combustion Engines [326 IAC 12][40 CFR Part 60, Subpart IIII]

The Permittee who owns and operates stationary compression ignition (CI) internal combustion engines (ICE) constructed, manufactured, reconstructed, or modified after the relevant dates in 40 CFR Part 60, Subpart IIII, shall comply with the following provisions of 40 CFR Part 60, Subpart IIII, included in this permit. The source is subject to the following portions of Subpart IIII:

(1) 40 CFR 60.4201;
(2) 40 CFR 60.4202;
(3) 40 CFR 60.4204; (if the engine is operated for any purposes other than emergencies, maintenance checks or readiness testing);
(4) 40 CFR 60.4205
(5) 40 CFR 60.4206;
(6) 40 CFR 60.4207(b);
(7) 40 CFR 60.4208;
(8) 40 CFR 60.4209(a);

(9) 40 CFR 60.4211(a);
(10) 40 CFR 60.4211(b);
(11) 40 CFR 60.4211(c);
(12) 40 CFR 60.4211(e);
(13) 40 CFR 60.4214(b);

E.2.3 Advance Approval of Modifications [326 IAC 2-7-5(15)]

The Permittee may modify any existing emission unit, replace any existing emission unit, or add an emergency engine or fire pump without a source modification approval required by 326 IAC 2-7-10.5 or a permit revision required by 326 IAC 2-7-12 provided the following requirements are satisfied:

(a) All the applicable requirements for the modified, replaced or newly constructed emission unit are described or referenced in this section of the permit or in Sections B and C of this permit.

(b) The modification, replacement or construction of the emission unit does not require new or additional applicable requirements to be added to this section of the permit.

(c) The modification, replacement or construction of the emission unit does not require revision of applicable requirements in this section of the permit.

(d) The modification, replacement or construction of the emission unit does not meet the definition of a major modification as defined in 326 IAC 2-2-1 or 326 IAC 2-3-1.

SECTION E.3 EMISSIONS UNIT OPERATION CONDITIONS

Emissions Unit Description:

(b) Manufacture of bulk pharmaceutical products (Building 358) by:

(1) protein isolation with a carbon adsorber for VOC and HAP control with laboratory support;
(2) chemical synthesis,

units subject to BACT [326 IAC 8-1-6].

(c) Manufacture of bulk pharmaceutical products (Building 358) by:

(1) protein isolation with laboratory support;
(2) chemical synthesis, or non-synthesized chemical processes;

units not subject to BACT [326 IAC 8-1-6].

(d) The BHI area consists of five buildings (building 132, 133, 134, 138 and 142) where manufacturing of bulk pharmaceutical products through chemical synthesis takes place using condensers and a scrubber as VOC control.

(e) Building 130 Complex (buildings 130, 135 and 136) consisting of laboratories and manufacturing of bulk pharmaceutical products through chemical synthesis.

(The information describing the process contained in this emissions unit description box is descriptive information and does not constitute enforceable conditions.)

National Emission Standards For Hazardous Air Pollutants [40 CFR 63]

E.3.1 General Provisions Relating to HAPs [326 IAC 20-1-1][40 CFR 63, Subpart A]

The provisions of 40 CFR Part 63, Subpart A - General Provisions, which are incorporated as 326 IAC 20-1-1, apply to the processes described in this section except when otherwise specified in Table 1 of 40 CFR 63, Subpart GGG when manufacturing pharmaceutical product and processing, using or producing HAP.

E.3.2 National Emission Standards for Hazardous Air Pollutants for Pharmaceuticals Production--General [40 CFR 63, Subpart GGG] [326 IAC 20-57]

Pursuant to 40 CFR 63, Subpart GGG, the Permittee shall comply with the provisions of the National Emission Standards for Hazardous Air Pollutants for Pharmaceuticals Production which are incorporated by reference as 326 IAC 20-57 as specified as follows:

40 CFR 63.1250
40 CFR 63.1251
40 CFR 63.1252
40 CFR 63.1253
40 CFR 63.1254
40 CFR 63.1256
40 CFR 63.1257
40 CFR 63.1258
40 CFR 63.1259

40 CFR 63.1260

E.3.3 National Emission Standards for Hazardous Air Pollutants for Pharmaceuticals Production—Leak Detection and Repair [40 CFR 63, Subpart GGG] [326 IAC 20-57]

Pursuant to 40 CFR 63, Subpart GGG, the Permittee shall comply with the provisions of the National Emission Standards for Hazardous Air Pollutants for Pharmaceuticals Production regarding Leak Detection and Repair which are incorporated by reference as 326 IAC 20-57 as specified as follows:

40 CFR 63.1255

SECTION E.4 EMISSIONS UNIT OPERATION CONDITIONS

Emissions Unit Description:

(b) Manufacture of bulk pharmaceutical products (Building 358) by:

(1) protein isolation with a carbon adsorber for VOC and HAP control with laboratory support;
(2) chemical synthesis,

units subject to BACT [326 IAC 8-1-6].

(The information describing the process contained in this emissions unit description box is descriptive information and does not constitute enforceable conditions.)

National Emission Standards For Hazardous Air Pollutants [40 CFR 61]

E.4.1 National Emission Standards for Equipment Leaks (Fugitive Emission Sources) [40 CFR 61, Subpart V] [326 IAC 14-8]

Where required by specific conditions in Section D of this permit, pursuant to 40 CFR 61, Subpart V, the Permittee shall comply with the provisions of the National Emission Standards for Equipment Leaks (Fugitive Emission Sources) which are incorporated by reference as 326 IAC 14-8 as specified as follows:

40 CFR 61.242-2
40 CFR 61.242-3
40 CFR 61.242-4
40 CFR 61.242-5
40 CFR 61.242-6
40 CFR 61.242-7
40 CFR 61.242-8
40 CFR 61.242-10
40 CFR 61.243-1
40 CFR 61.243-2

SECTION E.5 EMISSIONS UNIT OPERATION CONDITIONS

Emissions Unit Description:

Entire Source

(The information describing the process contained in this emissions unit description box is descriptive information and does not constitute enforceable conditions.)

National Emission Standards For Hazardous Air Pollutants [40 CFR 63]

E.5.1 General Provisions Relating to HAPs [326 IAC 20-1-1][40 CFR 63, Subpart A]

The provisions of 40 CFR Part 63, Subpart A - General Provisions, which are incorporated as 326 IAC 20-1-1, apply to the processes described in this section except when otherwise specified in 40 CFR 63, Subpart GGGGG for Site Remediation.

E.5.2 National Emission Standards for Hazardous Air Pollutants: Site Remediation [40 CFR 63, Subpart GGGGG] [326 IAC 20-87]

Pursuant to 40 CFR 63, Subpart GGGGG, the Permittee shall comply with the provisions of the National Emission Standards for Hazardous Air Pollutants for Site Remediation which are incorporated by reference as 326 IAC 20-87 as specified as follows:

40 CFR 63.7881(c)

SECTION E.6 EMISSIONS UNIT OPERATION CONDITIONS

Emissions Unit Description:

Entire Facility (as defined in 40 CFR 61.341)

(The information describing the process contained in this emissions unit description box is descriptive information and does not constitute enforceable conditions.)

National Emission Standards For Hazardous Air Pollutants [40 CFR 61]

E.6.1 General Provisions Relating to HAPs [326 IAC 14-1-1][40 CFR 61, Subpart A]

The provisions of 40 CFR Part 61, Subpart A - General Provisions, which are incorporated as 326 IAC 14-1-1, apply to the processes described in this section except when otherwise specified in 40 CFR 61, Subpart FF.

E.6.2 National Emission Standards for Benzene Waste Operations [40 CFR 61, Subpart FF]

Pursuant to 40 CFR 61, Subpart FF, the Permittee shall comply with the provisions of the National Emission Standards for Benzene Waste Operations as specified as follows:

40 CFR 61.340(a)
40 CFR 61.341
40 CFR 61.342(a)
40 CFR 61.355
40 CFR 61.356
40 CFR 61.357 (a) & (b)

SECTION E.7 EMISSIONS UNIT OPERATION CONDITIONS

Emissions Unit Description: Emergency Generator

One (1) 0.25MW natural gas-fired emergency generator, identified as B359, permitted in 2013, with heat input capacity of 3.51 million British thermal units per hour, using Catalytic Oxidizer as control, and exhausting to stack B359 Emergency Generator.

This is an affected source under 40 CFR 60, Subpart JJJJ.

(The information describing the process contained in this facility description box is descriptive information and does not constitute enforceable conditions.)

New Source Performance Standards (NSPS) Requirements [326 IAC 12-1]

E.7.1 General Provisions Relating to New Source Performance Standards [326 IAC 12-1] [40 CFR Part 60, Subpart A]

(a) Pursuant to 40 CFR 60.1, the Permittee shall comply with the provisions of 40 CFR Part 60 Subpart A – General Provisions, which are incorporated by reference as 326 IAC 12-1 for emergency generator B359 except as otherwise specified in 40 CFR Part 60, Subpart JJJJ.

(b) Pursuant to 40 CFR 60.19, the Permittee shall submit all required notifications and reports to:

Indiana Department of Environmental Management
Compliance and Enforcement Branch, Office of Air Quality
100 North Senate Avenue
MC 61-53 IGCN 1003
Indianapolis, Indiana 46204-2251

E.7.2 Standards of Performance for Stationary Spark Ignition Internal Combustion Engines [40 CFR Part 60, Subpart JJJJ] [326 IAC 12]

Pursuant to 40 CFR Part 60, Subpart JJJJ, the Permittee shall comply with the provisions of Standards of Performance for Stationary Spark Ignition Internal Combustion Engines, which are incorporated by reference as 326 IAC 12, for emergency generator B359 as follows: The full text of Subpart JJJJ may be found in Attachment G to this permit.

(1) 40 CFR 60.4230(a)(4)(iii)
(2) 40 CFR 60.4233(e)
(3) 40 CFR 60.4234
(4) 40 CFR 60.4236(a)
(5) 40 CFR 60.4236(c)
(6) 40 CFR 60.4237
(7) 40 CFR 60.4243(b)
(8) 40 CFR 60.4243(d) and (e)
(9) 40 CFR 60.4243(f)
(10) 40 CFR 60.4243(g)
(11) 40 CFR 60.4245(a) and (b)
(12) 40 CFR 60.4246
(13) 40 CFR 60.4244 when 60.4243(f) applies

INDIANA DEPARTMENT OF ENVIRONMENTAL MANAGEMENT
OFFICE OF AIR QUALITY
COMPLIANCE AND ENFORCEMENT BRANCH
PART 70 OPERATING PERMIT
CERTIFICATION

Source Name: Eli Lilly and Company, Lilly Technology Center
Source Address: 1555 South Harding Street, Indianapolis, Indiana 46168
Part 70 Permit No.: T097-30149-00072

This certification shall be included when submitting monitoring, testing reports/results or other documents as required by this permit.

Please check what document is being certified:

☐ Annual Compliance Certification Letter

☐ Test Result (specify)

☐ Report (specify)

☐ Notification (specify)

☐ Affidavit (specify)

☐ Other (specify)

I certify that, based on information and belief formed after reasonable inquiry, the statements and information in the document are true, accurate, and complete.
Signature:
Printed Name:
Title/Position:
Phone:
Date:

INDIANA DEPARTMENT OF ENVIRONMENTAL MANAGEMENT
OFFICE OF AIR QUALITY
COMPLIANCE AND ENFORCEMENT BRANCH
100 North Senate Avenue
MC 61-53 IGCN 1003
Indianapolis, Indiana 46204-2251
Phone: (317) 233-0178
Fax: (317) 233-6865

PART 70 OPERATING PERMIT
EMERGENCY OCCURRENCE REPORT

Source Name: Eli Lilly and Company, Lilly Technology Center
Source Address: 1555 South Harding Street, Indianapolis, Indiana 46168
Part 70 Permit No.: T097-30149-00072

This form consists of 2 pages **Page 1 of 2**

☐ This is an emergency as defined in 326 IAC 2-7-1(12) • The Permittee must notify the Office of Air Quality (OAQ), within four (**4**) business hours (1-800-451-6027 or 317-233-0178, ask for Compliance Section); and • The Permittee must submit notice in writing or by facsimile within two (**2**) working days (Facsimile Number: 317-233-6865), and follow the other requirements of 326 IAC 2-7-16.

If any of the following are not applicable, mark N/A

Facility/Equipment/Operation:
Control Equipment:
Permit Condition or Operation Limitation in Permit:
Description of the Emergency:
Describe the cause of the Emergency:

If any of the following are not applicable, mark N/A **Page 2 of 2**

Date/Time Emergency started:
Date/Time Emergency was corrected:
Was the facility being properly operated at the time of the emergency? Y N
Type of Pollutants Emitted: TSP, PM-10, SO_2, VOC, NO_X, CO, Pb, other:
Estimated amount of pollutant(s) emitted during emergency:
Describe the steps taken to mitigate the problem:
Describe the corrective actions/response steps taken:
Describe the measures taken to minimize emissions:
If applicable, describe the reasons why continued operation of the facilities are necessary to prevent imminent injury to persons, severe damage to equipment, substantial loss of capital investment, or loss of product or raw materials of substantial economic value:

Form Completed by:_____

Title / Position: _____

Date:_____

Phone: _____

INDIANA DEPARTMENT OF ENVIRONMENTAL MANAGEMENT
OFFICE OF AIR QUALITY
COMPLIANCE AND ENFORCEMENT BRANCH

Part 70 Quarterly Report

Source Name: Eli Lilly and Company, Lilly Technology Center
Source Address: 1555 South Harding Street, Indianapolis, Indiana 46168
Part 70 Permit No.: T097-30149-00072
Facility: Building 110
Parameter: VOC emissions
Limit: less than 10 tons of VOC per twelve (12) consecutive month period rolled on a monthly basis.

QUARTER : YEAR:

MONTH	Tons of VOC emitted this Month	Tons of VOC emitted in last twelve months

☐ No deviation occurred in this quarter.

☐ Deviation/s occurred in this quarter.
Deviation has been reported on:

Submitted by: _____
Title / Position: _____
Signature: _____
Date: _____
Phone: _____

INDIANA DEPARTMENT OF ENVIRONMENTAL MANAGEMENT
OFFICE OF AIR QUALITY
COMPLIANCE AND ENFORCEMENT BRANCH

Part 70 Quarterly Report

Source Name: Eli Lilly and Company, Lilly Technology Center
Source Address: 1555 South Harding Street, Indianapolis, Indiana 46168
Part 70 Permit No.: T097-30149-00072
Facility: BHI Complex - Building 132
Parameter: VOC
Limit: Less than 40 tons per twelve (12) consecutive month period with compliance determined at the end of each month.

QUARTER : YEAR:

Month	Column 1	Column 2	Column 1 + Column 2
	This Month	Previous 11 Months	12 Month Total
Month 1			
Month 2			
Month 3			

☐ No deviation occurred in this quarter.

☐ Deviation/s occurred in this quarter.
Deviation has been reported on:

Submitted by: _____
Title / Position: _____
Signature: _____
Date: _____
Phone: _____

INDIANA DEPARTMENT OF ENVIRONMENTAL MANAGEMENT
OFFICE OF AIR QUALITY
COMPLIANCE AND ENFORCEMENT BRANCH
PART 70 OPERATING PERMIT
QUARTERLY DEVIATION AND COMPLIANCE MONITORING REPORT

Source Name: Eli Lilly and Company, Lilly Technology Center
Source Address: 1555 South Harding Street, Indianapolis, Indiana 46168
Part 70 Permit No.: T097-30149-00072

Months: _____ to _____ Year: _____

Page 1 of 2

This report shall be submitted quarterly based on a calendar year. Proper notice submittal under Section B –Emergency Provisions satisfies the reporting requirements of paragraph (a) of Section C-General Reporting. Any deviation from the requirements of this permit, the date(s) of each deviation, the probable cause of the deviation, and the response steps taken must be reported. A deviation required to be reported pursuant to an applicable requirement that exists independent of the permit, shall be reported according to the schedule stated in the applicable requirement and does not need to be included in this report. Additional pages may be attached if necessary. If no deviations occurred, please specify in the box marked "No deviations occurred this reporting period".	
☐ NO DEVIATIONS OCCURRED THIS REPORTING PERIOD.	
☐ THE FOLLOWING DEVIATIONS OCCURRED THIS REPORTING PERIOD	
Permit Requirement (specify permit condition #)	
Date of Deviation:	**Duration of Deviation:**
Number of Deviations:	
Probable Cause of Deviation:	
Response Steps Taken:	
Permit Requirement (specify permit condition #)	
Date of Deviation:	**Duration of Deviation:**
Number of Deviations:	
Probable Cause of Deviation:	
Response Steps Taken:	

Permit Requirement (specify permit condition #)	
Date of Deviation:	**Duration of Deviation:**
Number of Deviations:	
Probable Cause of Deviation:	
Response Steps Taken:	
Permit Requirement (specify permit condition #)	
Date of Deviation:	**Duration of Deviation:**
Number of Deviations:	
Probable Cause of Deviation:	
Response Steps Taken:	
Permit Requirement (specify permit condition #)	
Date of Deviation:	**Duration of Deviation:**
Number of Deviations:	
Probable Cause of Deviation:	
Response Steps Taken:	

Form Completed by:_____

Title / Position: _____

Date:_____

Phone: _____

Attachment A
to a Part 70 Operating Permit

40 CFR 63, Subpart ZZZZ—National Emission Standards for Hazardous Air Pollutants for Stationary Reciprocating Internal Combustion Engines:

Source Background and Description

Source Name:	Eli Lilly and Company, Lilly Technology Center
Source Location:	1555 South Harding Street, Indianapolis, IN 46168
County:	Marion
SIC Code:	2833, 2834
Permit Renewal No.:	T097-30149-00072
Permit Reviewer:	Josiah Balogun

The following is believed to be the correct text of the sections cited. However, in the event there is any discrepancy between this material and that of these regulatory sections as they appear in the Code of Federal Regulations, July 1, 2011 edition (the CFR), as adopted by reference by IDEM at 326 IAC 1-1-3, the language of the CFR shall govern.

Section E.1 of the Permit identifies the applicable section of this rule

Subpart ZZZZ—National Emissions Standards for Hazardous Air Pollutants for Stationary Reciprocating Internal Combustion Engines

Source: 69 FR 33506, June 15, 2004, unless otherwise noted.

What This Subpart Covers

§ 63.6580 What is the purpose of subpart ZZZZ?

Subpart ZZZZ establishes national emission limitations and operating limitations for hazardous air pollutants (HAP) emitted from stationary reciprocating internal combustion engines (RICE) located at major and area sources of HAP emissions. This subpart also establishes requirements to demonstrate initial and continuous compliance with the emission limitations and operating limitations.

[73 FR 3603, Jan. 18, 2008]

§ 63.6585 Am I subject to this subpart?

You are subject to this subpart if you own or operate a stationary RICE at a major or area source of HAP emissions, except if the stationary RICE is being tested at a stationary RICE test cell/stand.

(a) A stationary RICE is any internal combustion engine which uses reciprocating motion to convert heat energy into mechanical work and which is not mobile. Stationary RICE differ from mobile RICE in that a stationary RICE is not a non-road engine as defined at 40 CFR 1068.30, and is not used to propel a motor vehicle or a vehicle used solely for competition.

(b) A major source of HAP emissions is a plant site that emits or has the potential to emit any single HAP at a rate of 10 tons (9.07 megagrams) or more per year or any combination of HAP at a rate of 25 tons (22.68 megagrams) or more per year, except that for oil and gas production facilities, a major source of HAP emissions is determined for each surface site.

(c) An area source of HAP emissions is a source that is not a major source.

(d) If you are an owner or operator of an area source subject to this subpart, your status as an entity subject to a standard or other requirements under this subpart does not subject you to the obligation to obtain a permit under 40 CFR part 70 or 71, provided you are not required to obtain a permit under 40 CFR 70.3(a) or 40 CFR 71.3(a) for a reason other than your status as an area source under this subpart. Notwithstanding the previous sentence, you must continue to comply with the provisions of this subpart as applicable.

(e) If you are an owner or operator of a stationary RICE used for national security purposes, you may be eligible to request an exemption from the requirements of this subpart as described in 40 CFR part 1068, subpart C.

[69 FR 33506, June 15, 2004, as amended at 73 FR 3603, Jan. 18, 2008]

§ 63.6590 What parts of my plant does this subpart cover?

This subpart applies to each affected source.

(a) *Affected source.* An affected source is any existing, new, or reconstructed stationary RICE located at a major or area source of HAP emissions, excluding stationary RICE being tested at a stationary RICE test cell/stand.

(1) *Existing stationary RICE.*

(i) For stationary RICE with a site rating of more than 500 brake horsepower (HP) located at a major source of HAP emissions, a stationary RICE is existing if you commenced construction or reconstruction of the stationary RICE before December 19, 2002.

(ii) For stationary RICE with a site rating of less than or equal to 500 brake HP located at a major source of HAP emissions, a stationary RICE is existing if you commenced construction or reconstruction of the stationary RICE before June 12, 2006.

(iii) For stationary RICE located at an area source of HAP emissions, a stationary RICE is existing if you commenced construction or reconstruction of the stationary RICE before June 12, 2006.

(iv) A change in ownership of an existing stationary RICE does not make that stationary RICE a new or reconstructed stationary RICE.

(2) *New stationary RICE.* (i) A stationary RICE with a site rating of more than 500 brake HP located at a major source of HAP emissions is new if you commenced construction of the stationary RICE on or after December 19, 2002.

(ii) A stationary RICE with a site rating of equal to or less than 500 brake HP located at a major source of HAP emissions is new if you commenced construction of the stationary RICE on or after June 12, 2006.

(iii) A stationary RICE located at an area source of HAP emissions is new if you commenced construction of the stationary RICE on or after June 12, 2006.

(3) *Reconstructed stationary RICE.* (i) A stationary RICE with a site rating of more than 500 brake HP located at a major source of HAP emissions is reconstructed if you meet the definition of reconstruction in §63.2 and reconstruction is commenced on or after December 19, 2002.

(ii) A stationary RICE with a site rating of equal to or less than 500 brake HP located at a major source of HAP emissions is reconstructed if you meet the definition of reconstruction in §63.2 and reconstruction is commenced on or after June 12, 2006.

(iii) A stationary RICE located at an area source of HAP emissions is reconstructed if you meet the definition of reconstruction in §63.2 and reconstruction is commenced on or after June 12, 2006.

(b) *Stationary RICE subject to limited requirements.* (1) An affected source which meets either of the criteria in paragraph (b)(1)(i) through (ii) of this section does not have to meet the requirements of this subpart and of subpart A of this part except for the initial notification requirements of §63.6645(h).

(i) The stationary RICE is a new or reconstructed emergency stationary RICE with a site rating of more than 500 brake HP located at a major source of HAP emissions; or

(ii) The stationary RICE is a new or reconstructed limited use stationary RICE with a site rating of more than 500 brake HP located at a major source of HAP emissions.

(2) A new or reconstructed stationary RICE with a site rating of more than 500 brake HP located at a major source of HAP emissions which combusts landfill or digester gas equivalent to 10 percent or more of the gross heat input on an annual basis must meet the initial notification requirements of §63.6645(h) and the requirements of §§63.6625(c), 63.6650(g), and 63.6655(c). These stationary RICE do not have to meet the emission limitations and operating limitations of this subpart.

(3) A stationary RICE which is an existing spark ignition 4 stroke rich burn (4SRB) stationary RICE located at an area source, an existing spark ignition 4SRB stationary RICE with a site rating of less than or equal to 500 brake HP located at a major source, an existing spark ignition 2 stroke lean burn (2SLB) stationary RICE, an existing spark ignition 4 stroke lean burn (4SLB) stationary RICE, an existing compression ignition (CI) stationary RICE, an existing emergency stationary RICE, an existing limited use stationary RICE, or an existing stationary RICE that combusts landfill gas or digester gas equivalent to 10 percent or more of the gross heat input on an annual basis, does not have to meet the requirements of this subpart and of subpart A of this part. No initial notification is necessary.

(c) *Stationary RICE subject to Regulations under 40 CFR Part 60.* An affected source that is a new or reconstructed stationary RICE located at an area source, or is a new or reconstructed stationary RICE located at a major source of HAP emissions and is a spark ignition 2 stroke lean burn (2SLB) stationary RICE with a site rating of less than 500 brake HP, a spark ignition 4 stroke lean burn (4SLB) stationary RICE with a site rating of less than 250 brake HP, or a 4 stroke rich burn (4SRB) stationary RICE with a site rating of less than or equal to 500 brake HP, a stationary RICE with a site rating of less than or equal to 500 brake HP which combusts landfill or digester gas equivalent to 10 percent or more of the gross heat input on an annual basis, an emergency or limited use stationary RICE with a site rating of less than or equal to 500 brake HP, or a compression ignition (CI) stationary RICE with a site rating of less than or equal to 500 brake HP, must meet the requirements of this part by meeting the requirements of 40 CFR part 60 subpart IIII, for compression ignition engines or 40 CFR part 60 subpart JJJJ, for spark ignition engines. No further requirements apply for such engines under this part.

[69 FR 33506, June 15, 2004, as amended at 73 FR 3604, Jan. 18, 2008]

§ 63.6595 When do I have to comply with this subpart?

(a) *Affected Sources.* (1) If you have an existing stationary RICE with a site rating of more than 500 brake HP located at a major source of HAP emissions, you must comply with the applicable emission limitations and operating limitations no later than June 15, 2007.

(2) If you start up your new or reconstructed stationary RICE with a site rating of more than 500 brake HP located at a major source of HAP emissions before August 16, 2004, you must comply with the applicable emission limitations and operating limitations in this subpart no later than August 16, 2004.

(3) If you start up your new or reconstructed stationary RICE with a site rating of more than 500 brake HP located at a major source of HAP emissions after August 16, 2004, you must comply with the applicable emission limitations and operating limitations in this subpart upon startup of your affected source.

(4) If you start up your new or reconstructed stationary RICE with a site rating of less than or equal to 500 brake HP located at a major source of HAP emissions before January 18, 2008, you must comply with the applicable emission limitations and operating limitations in this subpart no later than January 18, 2008.

(5) If you start up your new or reconstructed stationary RICE with a site rating of less than or equal to 500 brake HP located at a major source of HAP emissions after January 18, 2008, you must comply with the applicable emission limitations and operating limitations in this subpart upon startup of your affected source.

(6) If you start up your new or reconstructed stationary RICE located at an area source of HAP emissions before January 18, 2008, you must comply with the applicable emission limitations and operating limitations in this subpart no later than January 18, 2008.

(7) If you start up your new or reconstructed stationary RICE located at an area source of HAP emissions after January 18, 2008, you must comply with the applicable emission limitations and operating limitations in this subpart upon startup of your affected source.

(b) *Area sources that become major sources.* If you have an area source that increases its emissions or its potential to emit such that it becomes a major source of HAP, the compliance dates in paragraphs (b)(1) and (2) of this section apply to you.

(1) Any stationary RICE for which construction or reconstruction is commenced after the date when your area source becomes a major source of HAP must be in compliance with this subpart upon startup of your affected source.

(2) Any stationary RICE for which construction or reconstruction is commenced before your area source becomes a major source of HAP must be in compliance with the provisions of this subpart that are applicable to RICE located at major sources within 3 years after your area source becomes a major source of HAP.

(c) If you own or operate an affected source, you must meet the applicable notification requirements in §63.6645 and in 40 CFR part 63, subpart A.

[69 FR 33506, June 15, 2004, as amended at 73 FR 3604, Jan. 18, 2008]

Emission and Operating Limitations

§ 63.6600 What emission limitations and operating limitations must I meet if I own or operate a stationary RICE with a site rating of more than 500 brake HP located at a major source of HAP emissions?

(a) If you own or operate an existing, new, or reconstructed spark ignition 4SRB stationary RICE with a site rating of more than 500 brake HP located at a major source of HAP emissions, you must comply with the emission limitations in Table 1a to this subpart and the operating limitations in Table 1b to this subpart which apply to you.

(b) If you own or operate a new or reconstructed 2SLB stationary RICE with a site rating of more than 500 brake HP located at major source of HAP emissions, a new or reconstructed 4SLB stationary RICE with a site rating of more than 500 brake HP located at major source of HAP emissions, or a new or reconstructed CI stationary RICE with a site rating of more than 500 brake HP located at a major source of HAP emissions, you must comply with the emission limitations in Table 2a to this subpart and the operating limitations in Table 2b to this subpart which apply to you.

(c) If you own or operate any of the following RICE with a site rating of more than 500 brake HP located at a major source of HAP emissions, you do not need to comply with the emission limitations in Tables 1a and 2a to this subpart or operating limitations in Tables 1b and 2b to this subpart: an existing 2SLB stationary RICE, an existing 4SLB

stationary RICE, or an existing CI stationary RICE; a stationary RICE that combusts landfill gas or digester gas equivalent to 10 percent or more of the gross heat input on an annual basis; an emergency stationary RICE; or a limited use stationary RICE.

[73 FR 3605, Jan. 18, 2008]

§ 63.6601 What emission limitations must I meet if I own or operate a 4SLB stationary RICE with a site rating of greater than or equal to 250 brake HP and less than 500 brake HP located at a major source of HAP emissions?

If you own or operate a new or reconstructed 4SLB stationary RICE with a site rating of greater than or equal to 250 and less than or equal to 500 brake HP located at major source of HAP emissions manufactured on or after January 1, 2008, you must comply with the emission limitations in Table 2a to this subpart and the operating limitations in Table 2b to this subpart which apply to you.

[73 FR 3605, Jan. 18, 2008]

General Compliance Requirements

§ 63.6605 What are my general requirements for complying with this subpart?

(a) You must be in compliance with the emission limitations and operating limitations in this subpart that apply to you at all times, except during periods of startup, shutdown, and malfunction.

(b) If you must comply with emission limitations and operating limitations, you must operate and maintain your stationary RICE, including air pollution control and monitoring equipment, in a manner consistent with good air pollution control practices for minimizing emissions at all times, including during startup, shutdown, and malfunction.

Testing and Initial Compliance Requirements

§ 63.6610 By what date must I conduct the initial performance tests or other initial compliance demonstrations if I own or operate a stationary RICE with a site rating of more than 500 brake HP located at a major source of HAP emissions?

If you own or operate a stationary RICE with a site rating of more than 500 brake HP located at a major source of HAP emissions you are subject to the requirements of this section.

(a) You must conduct the initial performance test or other initial compliance demonstrations in Table 4 to this subpart that apply to you within 180 days after the compliance date that is specified for your stationary RICE in §63.6595 and according to the provisions in §63.7(a)(2).

(b) If you commenced construction or reconstruction between December 19, 2002 and June 15, 2004 and own or operate stationary RICE with a site rating of more than 500 brake HP located at a major source of HAP emissions, you must demonstrate initial compliance with either the proposed emission limitations or the promulgated emission limitations no later than February 10, 2005 or no later than 180 days after startup of the source, whichever is later, according to §63.7(a)(2)(ix).

(c) If you commenced construction or reconstruction between December 19, 2002 and June 15, 2004 and own or operate stationary RICE with a site rating of more than 500 brake HP located at a major source of HAP emissions, and you chose to comply with the proposed emission limitations when demonstrating initial compliance, you must conduct a second performance test to demonstrate compliance with the promulgated emission limitations by December 13, 2007 or after startup of the source, whichever is later, according to §63.7(a)(2)(ix).

(d) An owner or operator is not required to conduct an initial performance test on units for which a performance test has been previously conducted, but the test must meet all of the conditions described in paragraphs (d)(1) through (5) of this section.

(1) The test must have been conducted using the same methods specified in this subpart, and these methods must have been followed correctly.

(2) The test must not be older than 2 years.

(3) The test must be reviewed and accepted by the Administrator.

(4) Either no process or equipment changes must have been made since the test was performed, or the owner or operator must be able to demonstrate that the results of the performance test, with or without adjustments, reliably demonstrate compliance despite process or equipment changes.

(5) The test must be conducted at any load condition within plus or minus 10 percent of 100 percent load.

[69 FR 33506, June 15, 2004, as amended at 73 FR 3605, Jan. 18, 2008]

§ 63.6611 By what date must I conduct the initial performance tests or other initial compliance demonstrations if I own or operate a 4SLB SI stationary RICE with a site rating of greater than or equal to 250 and less than or equal to 500 brake HP located at a major source of HAP emissions?

If you own or operate a new or reconstructed 4SLB stationary RICE with a site rating of greater than or equal to 250 and less than or equal to 500 brake HP located at a major source of HAP emissions, you must conduct an initial performance test within 240 days after the compliance date that is specified for your stationary RICE in §63.6595 and according to the provisions specified in Table 4 to this subpart, as appropriate.

[73 FR 3605, Jan. 18, 2008]

§ 63.6615 When must I conduct subsequent performance tests?

If you must comply with the emission limitations and operating limitations, you must conduct subsequent performance tests as specified in Table 3 of this subpart.

§ 63.6620 What performance tests and other procedures must I use?

(a) You must conduct each performance test in Tables 3 and 4 of this subpart that applies to you.

(b) Each performance test must be conducted according to the requirements in §63.7(e)(1) and under the specific conditions that this subpart specifies in Table 4. The test must be conducted at any load condition within plus or minus 10 percent of 100 percent load.

(c) You may not conduct performance tests during periods of startup, shutdown, or malfunction, as specified in §63.7(e)(1).

(d) You must conduct three separate test runs for each performance test required in this section, as specified in §63.7(e)(3). Each test run must last at least 1 hour.

(e)(1) You must use Equation 1 of this section to determine compliance with the percent reduction requirement:

$$\frac{C_i - C_o}{C_i} \times 100 = R \qquad \text{(Eq. 1)}$$

Where:

C_i= concentration of CO or formaldehyde at the control device inlet,

C_o= concentration of CO or formaldehyde at the control device outlet, and

R = percent reduction of CO or formaldehyde emissions.

(2) You must normalize the carbon monoxide (CO) or formaldehyde concentrations at the inlet and outlet of the control device to a dry basis and to 15 percent oxygen, or an equivalent percent carbon dioxide (CO_2). If pollutant concentrations are to be corrected to 15 percent oxygen and CO_2concentration is measured in lieu of oxygen concentration measurement, a CO_2correction factor is needed. Calculate the CO_2correction factor as described in paragraphs (e)(2)(i) through (iii) of this section.

(i) Calculate the fuel-specific $F_o$value for the fuel burned during the test using values obtained from Method 19, section 5.2, and the following equation:

$$F_o = \frac{0.209\, F_d}{F_c} \qquad \text{(Eq. 2)}$$

Where:

F_o= Fuel factor based on the ratio of oxygen volume to the ultimate CO_2volume produced by the fuel at zero percent excess air.

0.209 = Fraction of air that is oxygen, percent/100.

F_d= Ratio of the volume of dry effluent gas to the gross calorific value of the fuel from Method 19, dsm^3 /J (dscf/10^6 Btu).

F_c= Ratio of the volume of CO_2produced to the gross calorific value of the fuel from Method 19, dsm^3 /J (dscf/10^6 Btu).

(ii) Calculate the CO_2correction factor for correcting measurement data to 15 percent oxygen, as follows:

$$X_{co_2} = \frac{5.9}{F_o} \qquad \text{(Eq. 3)}$$

Where:

X_{co2}= CO_2correction factor, percent.

5.9 = 20.9 percent O_2−15 percent O_2, the defined O_2correction value, percent.

(iii) Calculate the $NO_X$and SO_2gas concentrations adjusted to 15 percent O_2using CO_2as follows:

$$C_{adj} = C_d \frac{X_{co_2}}{\%CO_2} \qquad \text{(Eq. 4)}$$

Where:

$\%CO_2$= Measured CO_2concentration measured, dry basis, percent.

(f) If you comply with the emission limitation to reduce CO and you are not using an oxidation catalyst, if you comply with the emission limitation to reduce formaldehyde and you are not using NSCR, or if you comply with the emission limitation to limit the concentration of formaldehyde in the stationary RICE exhaust and you are not using an oxidation catalyst or NSCR, you must petition the Administrator for operating limitations to be established during the initial performance test and continuously monitored thereafter; or for approval of no operating limitations. You must not conduct the initial performance test until after the petition has been approved by the Administrator.

(g) If you petition the Administrator for approval of operating limitations, your petition must include the information described in paragraphs (g)(1) through (5) of this section.

(1) Identification of the specific parameters you propose to use as operating limitations;

(2) A discussion of the relationship between these parameters and HAP emissions, identifying how HAP emissions change with changes in these parameters, and how limitations on these parameters will serve to limit HAP emissions;

(3) A discussion of how you will establish the upper and/or lower values for these parameters which will establish the limits on these parameters in the operating limitations;

(4) A discussion identifying the methods you will use to measure and the instruments you will use to monitor these parameters, as well as the relative accuracy and precision of these methods and instruments; and

(5) A discussion identifying the frequency and methods for recalibrating the instruments you will use for monitoring these parameters.

(h) If you petition the Administrator for approval of no operating limitations, your petition must include the information described in paragraphs (h)(1) through (7) of this section.

(1) Identification of the parameters associated with operation of the stationary RICE and any emission control device which could change intentionally (*e.g.,* operator adjustment, automatic controller adjustment, etc.) or unintentionally (*e.g.,* wear and tear, error, etc.) on a routine basis or over time;

(2) A discussion of the relationship, if any, between changes in the parameters and changes in HAP emissions;

(3) For the parameters which could change in such a way as to increase HAP emissions, a discussion of whether establishing limitations on the parameters would serve to limit HAP emissions;

(4) For the parameters which could change in such a way as to increase HAP emissions, a discussion of how you could establish upper and/or lower values for the parameters which would establish limits on the parameters in operating limitations;

(5) For the parameters, a discussion identifying the methods you could use to measure them and the instruments you could use to monitor them, as well as the relative accuracy and precision of the methods and instruments;

(6) For the parameters, a discussion identifying the frequency and methods for recalibrating the instruments you could use to monitor them; and

(7) A discussion of why, from your point of view, it is infeasible or unreasonable to adopt the parameters as operating limitations.

(i) The engine percent load during a performance test must be determined by documenting the calculations, assumptions, and measurement devices used to measure or estimate the percent load in a specific application. A written report of the average percent load determination must be included in the notification of compliance status. The following information must be included in the written report: the engine model number, the engine manufacturer, the year of purchase, the manufacturer's site-rated brake horsepower, the ambient temperature, pressure, and humidity during the performance test, and all assumptions that were made to estimate or calculate percent load during the performance test must be clearly explained. If measurement devices such as flow meters, kilowatt meters, beta analyzers, stain gauges, etc. are used, the model number of the measurement device, and an estimate of its accurate in percentage of true value must be provided.

§ 63.6625 What are my monitoring, installation, operation, and maintenance requirements?

(a) If you elect to install a CEMS as specified in Table 5 of this subpart, you must install, operate, and maintain a CEMS to monitor CO and either oxygen or CO_2at both the inlet and the outlet of the control device according to the requirements in paragraphs (a)(1) through (4) of this section.

(1) Each CEMS must be installed, operated, and maintained according to the applicable performance specifications of 40 CFR part 60, appendix B.

(2) You must conduct an initial performance evaluation and an annual relative accuracy test audit (RATA) of each CEMS according to the requirements in §63.8 and according to the applicable performance specifications of 40 CFR part 60, appendix B as well as daily and periodic data quality checks in accordance with 40 CFR part 60, appendix F, procedure 1.

(3) As specified in §63.8(c)(4)(ii), each CEMS must complete a minimum of one cycle of operation (sampling, analyzing, and data recording) for each successive 15-minute period. You must have at least two data points, with each representing a different 15-minute period, to have a valid hour of data.

(4) The CEMS data must be reduced as specified in §63.8(g)(2) and recorded in parts per million or parts per billion (as appropriate for the applicable limitation) at 15 percent oxygen or the equivalent CO_2concentration.

(b) If you are required to install a continuous parameter monitoring system (CPMS) as specified in Table 5 of this subpart, you must install, operate, and maintain each CPMS according to the requirements in §63.8.

(c) If you are operating a new or reconstructed stationary RICE which fires landfill gas or digester gas equivalent to 10 percent or more of the gross heat input on an annual basis, you must monitor and record your fuel usage daily with separate fuel meters to measure the volumetric flow rate of each fuel. In addition, you must operate your stationary RICE in a manner which reasonably minimizes HAP emissions.

(d) If you are operating a new or reconstructed emergency 4SLB stationary RICE with a site rating of greater than or equal to 250 and less than or equal to 500 brake HP located at a major source of HAP emissions, you must install a non-resettable hour meter prior to the startup of the engine.

[69 FR 33506, June 15, 2004, as amended at 73 FR 3606, Jan. 18, 2008]

§ 63.6630 How do I demonstrate initial compliance with the emission limitations and operating limitations?

(a) You must demonstrate initial compliance with each emission and operating limitation that applies to you according to Table 5 of this subpart.

(b) During the initial performance test, you must establish each operating limitation in Tables 1b and 2b of this subpart that applies to you.

(c) You must submit the Notification of Compliance Status containing the results of the initial compliance demonstration according to the requirements in §63.6645.

Continuous Compliance Requirements

§ 63.6635 How do I monitor and collect data to demonstrate continuous compliance?

(a) If you must comply with emission and operating limitations, you must monitor and collect data according to this section.

(b) Except for monitor malfunctions, associated repairs, and required quality assurance or control activities (including, as applicable, calibration checks and required zero and span adjustments), you must monitor continuously at all times that the stationary RICE is operating.

(c) You may not use data recorded during monitoring malfunctions, associated repairs, and required quality assurance or control activities in data averages and calculations used to report emission or operating levels. You must, however, use all the valid data collected during all other periods.

§ 63.6640 How do I demonstrate continuous compliance with the emission limitations and operating limitations?

(a) You must demonstrate continuous compliance with each emission limitation and operating limitation in Tables 1a and 1b and Tables 2a and 2b of this subpart that apply to you according to methods specified in Table 6 of this subpart.

(b) You must report each instance in which you did not meet each emission limitation or operating limitation in Tables 1a and 1b and Tables 2a and 2b of this subpart that apply to you. These instances are deviations from the emission and operating limitations in this subpart. These deviations must be reported according to the requirements in §63.6650. If you change your catalyst, you must reestablish the values of the operating parameters measured during the initial performance test. When you reestablish the values of your operating parameters, you must also conduct a performance test to demonstrate that you are meeting the required emission limitation applicable to your stationary RICE.

(c) [Reserved]

(d) Consistent with §§63.6(e) and 63.7(e)(1), deviations from the emission or operating limitations that occur during a period of startup, shutdown, or malfunction are not violations if you demonstrate to the Administrator's satisfaction that you were operating in accordance with §63.6(e)(1). For new, reconstructed, and rebuilt stationary RICE, deviations from the emission or operating limitations that occur during the first 200 hours of operation from engine startup (engine burn-in period) are not violations.

Rebuilt stationary RICE means a stationary RICE that has been rebuilt as that term is defined in 40 CFR §94.11(a).

(e) You must also report each instance in which you did not meet the requirements in Table 8 to this subpart that apply to you. If you own or operate any stationary RICE with a site rating of less than or equal to 500 brake HP located at a major source of HAP emissions (except new or reconstructed 4SLB engines greater than or equal to 250 and less than or equal to 500 brake HP), a stationary RICE located at an area source of HAP emissions, or any of the following RICE with a site rating of more than 500 brake HP located at a major source of HAP emissions, you do not

need to comply with the requirements in Table 8 to this subpart: An existing 2SLB stationary RICE, an existing 4SLB stationary RICE, an existing CI stationary RICE, an existing emergency stationary RICE, an existing limited use emergency stationary RICE, or an existing stationary RICE which fires landfill gas or digester gas equivalent to 10 percent or more of the gross heat input on an annual basis. If you own or operate any of the following RICE with a site rating of more than 500 brake HP located at a major source of HAP emissions, you do not need to comply with the requirements in Table 8 to this subpart, except for the initial notification requirements: a new or reconstructed stationary RICE that combusts landfill gas or digester gas equivalent to 10 percent or more of the gross heat input on an annual basis, a new or reconstructed emergency stationary RICE, or a new or reconstructed limited use stationary RICE.

[69 FR 33506, June 15, 2004, as amended at 71 FR 20467, Apr. 20, 2006; 73 FR 3606, Jan. 18, 2008]

Notifications, Reports, and Records

§ 63.6645 What notifications must I submit and when?

(a) If you own or operate a stationary RICE with a site rating of more than 500 brake HP located at a major source of HAP emissions or a new or reconstructed 4SLB stationary RICE with a site rating of greater than or equal to 250 HP located at a major source of HAP emissions, you must submit all of the notifications in §§63.7(b) and (c), 63.8(e), (f)(4) and (f)(6), 63.9(b) through (e), and (g) and (h) that apply to you by the dates specified.

(b) As specified in §63.9(b)(2), if you start up your stationary RICE with a site rating of more than 500 brake HP located at a major source of HAP emissions before the effective date of this subpart, you must submit an Initial Notification not later than December 13, 2004.

(c) If you start up your new or reconstructed stationary RICE with a site rating of more than 500 brake HP located at a major source of HAP emissions on or after August 16, 2004, you must submit an Initial Notification not later than 120 days after you become subject to this subpart.

(d) As specified in §63.9(b)(2), if you start up your stationary RICE with a site rating of equal to or less than 500 brake HP located at a major source of HAP emissions before the effective date of this subpart and you are required to submit an initial notification, you must submit an Initial Notification not later than July 16, 2008.

(e) If you start up your new or reconstructed stationary RICE with a site rating of equal to or less than 500 brake HP located at a major source of HAP emissions on or after March 18, 2008 and you are required to submit an initial notification, you must submit an Initial Notification not later than 120 days after you become subject to this subpart.

(f) If you are required to submit an Initial Notification but are otherwise not affected by the requirements of this subpart, in accordance with §63.6590(b), your notification should include the information in §63.9(b)(2)(i) through (v), and a statement that your stationary RICE has no additional requirements and explain the basis of the exclusion (for example, that it operates exclusively as an emergency stationary RICE if it has a site rating of more than 500 brake HP located at a major source of HAP emissions).

(g) If you are required to conduct a performance test, you must submit a Notification of Intent to conduct a performance test at least 60 days before the performance test is scheduled to begin as required in §63.7(b)(1).

(h) If you are required to conduct a performance test or other initial compliance demonstration as specified in Tables 4 and 5 to this subpart, you must submit a Notification of Compliance Status according to §63.9(h)(2)(ii).

(1) For each initial compliance demonstration required in Table 5 to this subpart that does not include a performance test, you must submit the Notification of Compliance Status before the close of business on the 30th day following the completion of the initial compliance demonstration.

(2) For each initial compliance demonstration required in Table 5 to this subpart that includes a performance test conducted according to the requirements in Table 3 to this subpart, you must submit the Notification of Compliance Status, including the performance test results, before the close of business on the 60th day following the completion of the performance test according to §63.10(d)(2).

[73 FR 3606, Jan. 18, 2008]

§ 63.6650 What reports must I submit and when?

(a) You must submit each report in Table 7 of this subpart that applies to you.

(b) Unless the Administrator has approved a different schedule for submission of reports under §63.10(a), you must submit each report by the date in Table 7 of this subpart and according to the requirements in paragraphs (b)(1) through (5) of this section.

(1) The first Compliance report must cover the period beginning on the compliance date that is specified for your affected source in §63.6595 and ending on June 30 or December 31, whichever date is the first date following the end of the first calendar half after the compliance date that is specified for your source in §63.6595.

(2) The first Compliance report must be postmarked or delivered no later than July 31 or January 31, whichever date follows the end of the first calendar half after the compliance date that is specified for your affected source in §63.6595.

(3) Each subsequent Compliance report must cover the semiannual reporting period from January 1 through June 30 or the semiannual reporting period from July 1 through December 31.

(4) Each subsequent Compliance report must be postmarked or delivered no later than July 31 or January 31, whichever date is the first date following the end of the semiannual reporting period.

(5) For each stationary RICE that is subject to permitting regulations pursuant to 40 CFR part 70 or 71, and if the permitting authority has established dates for submitting semiannual reports pursuant to 40 CFR 70.6 (a)(3)(iii)(A) or 40 CFR 71.6 (a)(3)(iii)(A), you may submit the first and subsequent Compliance reports according to the dates the permitting authority has established instead of according to the dates in paragraphs (b)(1) through (4) of this section.

(c) The Compliance report must contain the information in paragraphs (c)(1) through (6) of this section.

(1) Company name and address.

(2) Statement by a responsible official, with that official's name, title, and signature, certifying the accuracy of the content of the report.

(3) Date of report and beginning and ending dates of the reporting period.

(4) If you had a startup, shutdown, or malfunction during the reporting period, the compliance report must include the information in §63.10(d)(5)(i).

(5) If there are no deviations from any emission or operating limitations that apply to you, a statement that there were no deviations from the emission or operating limitations during the reporting period.

(6) If there were no periods during which the continuous monitoring system (CMS), including CEMS and CPMS, was out-of-control, as specified in §63.8(c)(7), a statement that there were no periods during which the CMS was out-of-control during the reporting period.

(d) For each deviation from an emission or operating limitation that occurs for a stationary RICE where you are not using a CMS to comply with the emission or operating limitations in this subpart, the Compliance report must contain the information in paragraphs (c)(1) through (4) of this section and the information in paragraphs (d)(1) and (2) of this section.

(1) The total operating time of the stationary RICE at which the deviation occurred during the reporting period.

(2) Information on the number, duration, and cause of deviations (including unknown cause, if applicable), as applicable, and the corrective action taken.

(e) For each deviation from an emission or operating limitation occurring for a stationary RICE where you are using a CMS to comply with the emission and operating limitations in this subpart, you must include information in paragraphs (c)(1) through (4) and (e)(1) through (12) of this section.

(1) The date and time that each malfunction started and stopped.

(2) The date, time, and duration that each CMS was inoperative, except for zero (low-level) and high-level checks.

(3) The date, time, and duration that each CMS was out-of-control, including the information in §63.8(c)(8).

(4) The date and time that each deviation started and stopped, and whether each deviation occurred during a period of malfunction or during another period.

(5) A summary of the total duration of the deviation during the reporting period, and the total duration as a percent of the total source operating time during that reporting period.

(6) A breakdown of the total duration of the deviations during the reporting period into those that are due to control equipment problems, process problems, other known causes, and other unknown causes.

(7) A summary of the total duration of CMS downtime during the reporting period, and the total duration of CMS downtime as a percent of the total operating time of the stationary RICE at which the CMS downtime occurred during that reporting period.

(8) An identification of each parameter and pollutant (CO or formaldehyde) that was monitored at the stationary RICE.

(9) A brief description of the stationary RICE.

(10) A brief description of the CMS.

(11) The date of the latest CMS certification or audit.

(12) A description of any changes in CMS, processes, or controls since the last reporting period.

(f) Each affected source that has obtained a title V operating permit pursuant to 40 CFR part 70 or 71 must report all deviations as defined in this subpart in the semiannual monitoring report required by 40 CFR 70.6 (a)(3)(iii)(A) or 40 CFR 71.6(a)(3)(iii)(A). If an affected source submits a Compliance report pursuant to Table 7 of this subpart along with, or as part of, the semiannual monitoring report required by 40 CFR 70.6(a)(3)(iii)(A) or 40 CFR 71.6(a)(3)(iii)(A), and the Compliance report includes all required information concerning deviations from any emission or operating limitation in this subpart, submission of the Compliance report shall be deemed to satisfy any obligation to report the same deviations in the semiannual monitoring report. However, submission of a Compliance report shall not otherwise affect any obligation the affected source may have to report deviations from permit requirements to the permit authority.

(g) If you are operating as a new or reconstructed stationary RICE which fires landfill gas or digester gas equivalent to 10 percent or more of the gross heat input on an annual basis, you must submit an annual report according to Table 7 of this subpart by the date specified unless the Administrator has approved a different schedule, according to the information described in paragraphs (b)(1) through (b)(5) of this section. You must report the data specified in (g)(1) through (g)(3) of this section.

(1) Fuel flow rate of each fuel and the heating values that were used in your calculations. You must also demonstrate that the percentage of heat input provided by landfill gas or digester gas is equivalent to 10 percent or more of the total fuel consumption on an annual basis.

(2) The operating limits provided in your federally enforceable permit, and any deviations from these limits.

(3) Any problems or errors suspected with the meters.

§ 63.6655 What records must I keep?

(a) If you must comply with the emission and operating limitations, you must keep the records described in paragraphs (a)(1) through (a)(3), (b)(1) through (b)(3) and (c) of this section.

(1) A copy of each notification and report that you submitted to comply with this subpart, including all documentation supporting any Initial Notification or Notification of Compliance Status that you submitted, according to the requirement in §63.10(b)(2)(xiv).

(2) The records in §63.6(e)(3)(iii) through (v) related to startup, shutdown, and malfunction.

(3) Records of performance tests and performance evaluations as required in §63.10(b)(2)(viii).

(b) For each CEMS or CPMS, you must keep the records listed in paragraphs (b)(1) through (3) of this section.

(1) Records described in §63.10(b)(2)(vi) through (xi).

(2) Previous (*i.e.,* superseded) versions of the performance evaluation plan as required in §63.8(d)(3).

(3) Requests for alternatives to the relative accuracy test for CEMS or CPMS as required in §63.8(f)(6)(i), if applicable.

(c) If you are operating a new or reconstructed stationary RICE which fires landfill gas or digester gas equivalent to 10 percent or more of the gross heat input on an annual basis, you must keep the records of your daily fuel usage monitors.

(d) You must keep the records required in Table 6 of this subpart to show continuous compliance with each emission or operating limitation that applies to you.

§ 63.6660 In what form and how long must I keep my records?

(a) Your records must be in a form suitable and readily available for expeditious review according to §63.10(b)(1).

(b) As specified in §63.10(b)(1), you must keep each record for 5 years following the date of each occurrence, measurement, maintenance, corrective action, report, or record.

(c) You must keep each record readily accessible in hard copy or electronic form on-site for at least 2 years after the date of each occurrence, measurement, maintenance, corrective action, report, or record, according to §63.10(b)(1). You can keep the records off-site for the remaining 3 years.

Other Requirements and Information

§ 63.6665 What parts of the General Provisions apply to me?

Table 8 to this subpart shows which parts of the General Provisions in §§63.1 through 63.15 apply to you. If you own or operate any stationary RICE with a site rating of less than or equal to 500 brake HP located at a major source of HAP emissions (except new or reconstructed 4SLB engines greater than or equal to 250 and less than or equal to 500 brake HP), a stationary RICE located at an area source of HAP emissions, or any of the following RICE with a site rating of more than 500 brake HP located at a major source of HAP emissions, you do not need to comply with any of the requirements of the General Provisions: An existing 2SLB RICE, an existing 4SLB stationary RICE, an

existing CI stationary RICE, an existing stationary RICE that combusts landfill gas or digester gas equivalent to 10 percent or more of the gross heat input on an annual basis, an existing emergency stationary RICE, or an existing limited use stationary RICE. If you own or operate any of the following RICE with a site rating of more than 500 brake HP located at a major source of HAP emissions, you do not need to comply with the requirements in the General Provisions except for the initial notification requirements: A new stationary RICE that combusts landfill gas or digester gas equivalent to 10 percent or more of the gross heat input on an annual basis, a new emergency stationary RICE, or a new limited use stationary RICE.

[73 FR 3606, Jan. 18, 2008]

§ 63.6670 Who implements and enforces this subpart?

(a) This subpart is implemented and enforced by the U.S. EPA, or a delegated authority such as your State, local, or tribal agency. If the U.S. EPA Administrator has delegated authority to your State, local, or tribal agency, then that agency (as well as the U.S. EPA) has the authority to implement and enforce this subpart. You should contact your U.S. EPA Regional Office to find out whether this subpart is delegated to your State, local, or tribal agency.

(b) In delegating implementation and enforcement authority of this subpart to a State, local, or tribal agency under 40 CFR part 63, subpart E, the authorities contained in paragraph (c) of this section are retained by the Administrator of the U.S. EPA and are not transferred to the State, local, or tribal agency.

(c) The authorities that will not be delegated to State, local, or tribal agencies are:

(1) Approval of alternatives to the non-opacity emission limitations and operating limitations in §63.6600 under §63.6(g).

(2) Approval of major alternatives to test methods under §63.7(e)(2)(ii) and (f) and as defined in §63.90.

(3) Approval of major alternatives to monitoring under §63.8(f) and as defined in §63.90.

(4) Approval of major alternatives to recordkeeping and reporting under §63.10(f) and as defined in §63.90.

(5) Approval of a performance test which was conducted prior to the effective date of the rule, as specified in §63.6610(b).

§ 63.6675 What definitions apply to this subpart?

Terms used in this subpart are defined in the Clean Air Act (CAA); in 40 CFR 63.2, the General Provisions of this part; and in this section as follows:

Area source means any stationary source of HAP that is not a major source as defined in part 63.

Associated equipment as used in this subpart and as referred to in section 112(n)(4) of the CAA, means equipment associated with an oil or natural gas exploration or production well, and includes all equipment from the well bore to the point of custody transfer, except glycol dehydration units, storage vessels with potential for flash emissions, combustion turbines, and stationary RICE.

CAA means the Clean Air Act (42 U.S.C. 7401 *et seq.,* as amended by Public Law 101–549, 104 Stat. 2399).

Compression ignition means relating to a type of stationary internal combustion engine that is not a spark ignition engine.

Custody transfer means the transfer of hydrocarbon liquids or natural gas: After processing and/or treatment in the producing operations, or from storage vessels or automatic transfer facilities or other such equipment, including

product loading racks, to pipelines or any other forms of transportation. For the purposes of this subpart, the point at which such liquids or natural gas enters a natural gas processing plant is a point of custody transfer.

Deviation means any instance in which an affected source subject to this subpart, or an owner or operator of such a source:

(1) Fails to meet any requirement or obligation established by this subpart, including but not limited to any emission limitation or operating limitation;

(2) Fails to meet any term or condition that is adopted to implement an applicable requirement in this subpart and that is included in the operating permit for any affected source required to obtain such a permit; or

(3) Fails to meet any emission limitation or operating limitation in this subpart during malfunction, regardless or whether or not such failure is permitted by this subpart.

(4) Fails to satisfy the general duty to minimize emissions established by §63.6(e)(1)(i).

Diesel engine means any stationary RICE in which a high boiling point liquid fuel injected into the combustion chamber ignites when the air charge has been compressed to a temperature sufficiently high for auto-ignition. This process is also known as compression ignition.

Diesel fuel means any liquid obtained from the distillation of petroleum with a boiling point of approximately 150 to 360 degrees Celsius. One commonly used form is fuel oil number 2.

Digester gas means any gaseous by-product of wastewater treatment typically formed through the anaerobic decomposition of organic waste materials and composed principally of methane and CO_2.

Dual-fuel engine means any stationary RICE in which a liquid fuel (typically diesel fuel) is used for compression ignition and gaseous fuel (typically natural gas) is used as the primary fuel.

Emergency stationary RICE means any stationary RICE whose operation is limited to emergency situations and required testing and maintenance. Examples include stationary RICE used to produce power for critical networks or equipment (including power supplied to portions of a facility) when electric power from the local utility (or the normal power source, if the facility runs on its own power production) is interrupted, or stationary RICE used to pump water in the case of fire or flood, etc. Stationary RICE used for peak shaving are not considered emergency stationary RICE. Stationary ICE used to supply power to an electric grid or that supply power as part of a financial arrangement with another entity are not considered to be emergency engines. Emergency stationary RICE with a site-rating of more than 500 brake HP located at a major source of HAP emissions that were installed prior to June 12, 2006, may be operated for the purpose of maintenance checks and readiness testing, provided that the tests are recommended by the manufacturer, the vendor, or the insurance company associated with the engine. Required testing of such units should be minimized, but there is no time limit on the use of emergency stationary RICE in emergency situations and for routine testing and maintenance. Emergency stationary RICE with a site-rating of more than 500 brake HP located at a major source of HAP emissions that were installed prior to June 12, 2006, may also operate an additional 50 hours per year in non-emergency situations. Emergency stationary RICE with a site-rating of more than 500 brake HP located at a major source of HAP emissions that were installed on or after June 12, 2006, must comply with requirements specified in 40 CFR 60.4243(d).

Four-stroke engine means any type of engine which completes the power cycle in two crankshaft revolutions, with intake and compression strokes in the first revolution and power and exhaust strokes in the second revolution.

Gaseous fuel means a material used for combustion which is in the gaseous state at standard atmospheric temperature and pressure conditions.

Gasoline means any fuel sold in any State for use in motor vehicles and motor vehicle engines, or nonroad or stationary engines, and commonly or commercially known or sold as gasoline.

Glycol dehydration unit means a device in which a liquid glycol (including, but not limited to, ethylene glycol, diethylene glycol, or triethylene glycol) absorbent directly contacts a natural gas stream and absorbs water in a contact tower or absorption column (absorber). The glycol contacts and absorbs water vapor and other gas stream constituents from the natural gas and becomes “rich” glycol. This glycol is then regenerated in the glycol dehydration unit reboiler. The “lean” glycol is then recycled.

Hazardous air pollutants (HAP) means any air pollutants listed in or pursuant to section 112(b) of the CAA.

ISO standard day conditions means 288 degrees Kelvin (15 degrees Celsius), 60 percent relative humidity and 101.3 kilopascals pressure.

Landfill gas means a gaseous by-product of the land application of municipal refuse typically formed through the anaerobic decomposition of waste materials and composed principally of methane and CO_2.

Lean burn engine means any two-stroke or four-stroke spark ignited engine that does not meet the definition of a rich burn engine.

Limited use stationary RICE means any stationary RICE that operates less than 100 hours per year.

Liquefied petroleum gas means any liquefied hydrocarbon gas obtained as a by-product in petroleum refining of natural gas production.

Liquid fuel means any fuel in liquid form at standard temperature and pressure, including but not limited to diesel, residual/crude oil, kerosene/naphtha (jet fuel), and gasoline.

Major Source, as used in this subpart, shall have the same meaning as in §63.2, except that:

(1) Emissions from any oil or gas exploration or production well (with its associated equipment (as defined in this section)) and emissions from any pipeline compressor station or pump station shall not be aggregated with emissions from other similar units, to determine whether such emission points or stations are major sources, even when emission points are in a contiguous area or under common control;

(2) For oil and gas production facilities, emissions from processes, operations, or equipment that are not part of the same oil and gas production facility, as defined in §63.1271 of subpart HHH of this part, shall not be aggregated;

(3) For production field facilities, only HAP emissions from glycol dehydration units, storage vessel with the potential for flash emissions, combustion turbines and reciprocating internal combustion engines shall be aggregated for a major source determination; and

(4) Emissions from processes, operations, and equipment that are not part of the same natural gas transmission and storage facility, as defined in §63.1271 of subpart HHH of this part, shall not be aggregated.

Malfunction means any sudden, infrequent, and not reasonably preventable failure of air pollution control equipment, process equipment, or a process to operate in a normal or usual manner which causes, or has the potential to cause, the emission limitations in an applicable standard to be exceeded. Failures that are caused in part by poor maintenance or careless operation are not malfunctions.

Natural gas means a naturally occurring mixture of hydrocarbon and non-hydrocarbon gases found in geologic formations beneath the Earth's surface, of which the principal constituent is methane. Natural gas may be field or pipeline quality.

Non-selective catalytic reduction (NSCR) means an add-on catalytic nitrogen oxides (NO_X) control device for rich burn engines that, in a two-step reaction, promotes the conversion of excess oxygen, NO_X, CO, and volatile organic compounds (VOC) into CO_2, nitrogen, and water.

Oil and gas production facility as used in this subpart means any grouping of equipment where hydrocarbon liquids are processed, upgraded (*i.e.,* remove impurities or other constituents to meet contract specifications), or stored prior to the point of custody transfer; or where natural gas is processed, upgraded, or stored prior to entering the natural gas transmission and storage source category. For purposes of a major source determination, facility (including a building, structure, or installation) means oil and natural gas production and processing equipment that is located within the boundaries of an individual surface site as defined in this section. Equipment that is part of a facility will typically be located within close proximity to other equipment located at the same facility. Pieces of production equipment or groupings of equipment located on different oil and gas leases, mineral fee tracts, lease tracts, subsurface or surface unit areas, surface fee tracts, surface lease tracts, or separate surface sites, whether or not connected by a road, waterway, power line or pipeline, shall not be considered part of the same facility. Examples of facilities in the oil and natural gas production source category include, but are not limited to, well sites, satellite tank batteries, central tank batteries, a compressor station that transports natural gas to a natural gas processing plant, and natural gas processing plants.

Oxidation catalyst means an add-on catalytic control device that controls CO and VOC by oxidation.

Peaking unit or engine means any standby engine intended for use during periods of high demand that are not emergencies.

Percent load means the fractional power of an engine compared to its maximum manufacturer's design capacity at engine site conditions. Percent load may range between 0 percent to above 100 percent.

Potential to emit means the maximum capacity of a stationary source to emit a pollutant under its physical and operational design. Any physical or operational limitation on the capacity of the stationary source to emit a pollutant, including air pollution control equipment and restrictions on hours of operation or on the type or amount of material combusted, stored, or processed, shall be treated as part of its design if the limitation or the effect it would have on emissions is federally enforceable. For oil and natural gas production facilities subject to subpart HH of this part, the potential to emit provisions in §63.760(a) may be used. For natural gas transmission and storage facilities subject to subpart HHH of this part, the maximum annual facility gas throughput for storage facilities may be determined according to §63.1270(a)(1) and the maximum annual throughput for transmission facilities may be determined according to §63.1270(a)(2).

Production field facility means those oil and gas production facilities located prior to the point of custody transfer.

Production well means any hole drilled in the earth from which crude oil, condensate, or field natural gas is extracted.

Propane means a colorless gas derived from petroleum and natural gas, with the molecular structure C_3H_8.

Responsible official means responsible official as defined in 40 CFR 70.2.

Rich burn engine means any four-stroke spark ignited engine where the manufacturer's recommended operating air/fuel ratio divided by the stoichiometric air/fuel ratio at full load conditions is less than or equal to 1.1. Engines originally manufactured as rich burn engines, but modified prior to December 19, 2002 with passive emission control technology for NO_X(such as pre-combustion chambers) will be considered lean burn engines. Also, existing engines where there are no manufacturer's recommendations regarding air/fuel ratio will be considered a rich burn engine if the excess oxygen content of the exhaust at full load conditions is less than or equal to 2 percent.

Site-rated HP means the maximum manufacturer's design capacity at engine site conditions.

Spark ignition means relating to either: A gasoline-fueled engine; or any other type of engine a spark plug (or other sparking device) and with operating characteristics significantly similar to the theoretical Otto combustion cycle. Spark ignition engines usually use a throttle to regulate intake air flow to control power during normal operation. Dual-fuel engines in which a liquid fuel (typically diesel fuel) is used for CI and gaseous fuel (typically natural gas) is used as the primary fuel at an annual average ratio of less than 2 parts diesel fuel to 100 parts total fuel on an energy equivalent basis are spark ignition engines.

Stationary reciprocating internal combustion engine (RICE) means any reciprocating internal combustion engine which uses reciprocating motion to convert heat energy into mechanical work and which is not mobile. Stationary

RICE differ from mobile RICE in that a stationary RICE is not a non-road engine as defined at 40 CFR 1068.30, and is not used to propel a motor vehicle or a vehicle used solely for competition.

Stationary RICE test cell/stand means an engine test cell/stand, as defined in subpart PPPPP of this part, that tests stationary RICE.

Stoichiometric means the theoretical air-to-fuel ratio required for complete combustion.

Storage vessel with the potential for flash emissions means any storage vessel that contains a hydrocarbon liquid with a stock tank gas-to-oil ratio equal to or greater than 0.31 cubic meters per liter and an American Petroleum Institute gravity equal to or greater than 40 degrees and an actual annual average hydrocarbon liquid throughput equal to or greater than 79,500 liters per day. Flash emissions occur when dissolved hydrocarbons in the fluid evolve from solution when the fluid pressure is reduced.

Subpart means 40 CFR part 63, subpart ZZZZ.

Surface site means any combination of one or more graded pad sites, gravel pad sites, foundations, platforms, or the immediate physical location upon which equipment is physically affixed.

Two-stroke engine means a type of engine which completes the power cycle in single crankshaft revolution by combining the intake and compression operations into one stroke and the power and exhaust operations into a second stroke. This system requires auxiliary scavenging and inherently runs lean of stoichiometric.

[69 FR 33506, June 15, 2004, as amended at 71 FR 20467, Apr. 20, 2006; 73 FR 3607, Jan. 18, 2008]

Table1ato Subpart ZZZZ of Part 63—Emission Limitations for Existing, New, and Reconstructed Spark Ignition, 4SRB Stationary RICE >500 HP Located at a Major Source of HAP Emissions

[As stated in §63.6600, you must comply with the following emission limitations for existing, new and reconstructed 4SRB stationary RICE >500 HP located at a major source of HAP emissions at 100 percent load plus or minus 10 percent]

For each...	You must meet the following emission limitations...
1. 4SRB stationary RICE	a. reduce formaldehyde emissions by 76 percent or more. If you commenced construction or reconstruction between December 19, 2002 and June 15, 2004, you may reduce formaldehyde emissions by 75 percent or more until June 15, 2007;
	or
	b. limit the concentration of formaldehyde in the stationary RICE exhaust 350 ppbvd or less at 15 percent O_2.

[73 FR 3607, Jan. 18, 2008]

Table1bto Subpart ZZZZ of Part 63—Operating Limitations for Existing, New, and Reconstructed Spark Ignition, 4SRB Stationary RICE >500 HP Located at a Major Source of HAP Emissions

[As stated in §§63.6600, 63.6630 and 63.6640, you must comply with the following operating emission limitations for existing, new and reconstructed 4SRB stationary RICE >500 HP located at a major source of HAP emissions]

For each...	You must meet the following operating limitation...
1. 4SRB stationary RICE complying with the requirement to reduce formaldehyde emissions by 76 percent or more (or by 75 percent or more, if applicable) and using NSCR; or	a. maintain your catalyst so that the pressure drop across the catalyst does not change by more than 2 inches of water at 100 percent load plus or minus 10 percent from the pressure drop across the catalyst measured during the initial performance test; and
4SRB stationary RICE complying with the requirement to limit the concentration of formaldehyde in the stationary RICE exhaust to 350 ppbvd or less at 15 percent $O_2$and using NSCR.	b. maintain the temperature of your stationary RICE exhaust so that the catalyst inlet temperature is greater than or equal to 750 °F and less than or equal to 1250 °F.
2. 4SRB stationary RICE complying with the requirement to reduce formaldehyde emissions by 76 percent or more (or by 75 percent or more, if applicable) and not using NSCR; or	Comply with any operating limitations approved by the Administrator.
4SRB stationary RICE complying with the requirement to limit the concentration of formaldehyde in the stationary RICE exhaust to 350 ppbvd or less at 15 percent $O_2$and not using NSCR.	

[73 FR 3607, Jan. 18, 2008]

Table2ato Subpart ZZZZ of Part 63—Emission Limitations for New and Reconstructed 2SLB and Compression Ignition Stationary RICE >500 HP and 4SLB Stationary RICE ≥250 HP Located at a Major Source of HAP Emissions

[As stated in §§63.6600 and 63.6601, you must comply with the following emission limitations for new and reconstructed lean burn and new and reconstructed compression ignition stationary RICE at 100 percent load plus or minus 10 percent]

For each...	You must meet the following emission limitation...
1. 2SLB stationary RICE	a. reduce CO emissions by 58 percent or more;

	or
	b. limit concentration of formaldehyde in the stationary RICE exhaust to 12 ppmvd or less at 15 percent O_2. If you commenced construction or reconstruction between December 19, 2002 and June 15, 2004, you may limit concentration of formaldehyde to 17 ppmvd or less at 15 percent O_2until June 15, 2007.
2. 4SLB stationary RICE	a. reduce CO emissions by 93 percent or more;
	or
	b. limit concentration of formaldehyde in the stationary RICE exhaust to 14 ppmvd or less at 15 percent O_2.
3. CI stationary RICE	a. reduce CO emissions by 70 percent or more;
	or
	b. limit concentration of formaldehyde in the stationary RICE exhaust to 580 ppbvd or less at 15 percent O_2.

[73 FR 3608, Jan. 18, 2008]

Table2bto Subpart ZZZZ of Part 63—Operating Limitations for New and Reconstructed 2SLB and Compression Ignition Stationary RICE >500 HP and 4SLB Burn Stationary RICE ≥250 HP Located at a Major Source of HAP Emissions

[As stated in §§63.6600, 63.6601, 63.6630, and 63.6640, you must comply with the following operating limitations for new and reconstructed lean burn and new and reconstructed compression ignition stationary]

For each...	You must meet the following operating limitation...
1. 2SLB and 4SLB stationary RICE and CI stationary RICE complying with the requirement to reduce CO emissions and using an oxidation catalyst; or 2SLB and 4SLB stationary RICE and CI stationary RICE complying with the requirement to limit the concentration of formaldehyde in the stationary RICE exhaust and using an oxidation catalyst	a. maintain your catalyst so that the pressure drop across the catalyst does not change by more than 2 inches of water at 100 percent load plus or minus 10 percent from the pressure drop across the catalyst that was measured during the initial performance test; and b. maintain the temperature of your stationary RICE exhaust so that the catalyst inlet temperature is greater than or equal to 450 °F and less than or equal to 1350 °F.

2. 2SLB and 4SLB stationary RICE and CI stationary RICE complying with the requirement to reduce CO emissions and not using an oxidation catalyst; or 2SLB and 4SLB stationary RICE and CI stationary RICE complying with the requirement to limit the concentration of formaldehyde in the stationary RICE exhaust and not using an oxidation catalyst	Comply with any operating limitations approved by the Administrator.

[73 FR 3608, Jan. 18, 2008]

Table 3 to Subpart ZZZZ of Part 63—Subsequent Performance Tests

[As stated in §§63.6615 and 63.6620, you must comply with the following subsequent performance test requirements]

For each . . .	Complying with the requirement to . . .	You must . . .
1. 2SLB and 4SLB stationary RICE and CI stationary RICE	Reduce CO emissions and not using a CEMS	Conduct subsequent performance tests semiannually.[1]
2. 4SRB stationary RICE with a brake horsepower ≥5,000	Reduce formaldehyde emissions	Conduct subsequent performance tests semiannually.[1]
3. Stationary RICE (all stationary RICE subcategories and all brake horsepower ratings)	Limit the concentration of formaldehyde in the stationary RICE exhaust	Conduct subsequent performance tests semiannually.[1]

[1]After you have demonstrated compliance for two consecutive tests, you may reduce the frequency of subsequent performance tests to annually. If the results of any subsequent annual performance test indicate the stationary RICE is not in compliance with the CO or formaldehyde emission limitation, or you deviate from any of your operating limitations, you must resume semiannual performance tests.

Table 4 to Subpart ZZZZ of Part 63—Requirements for Performance Tests

[As stated in §§63.6610, 63.6611, 63.6620, and 63.6640, you must comply with the following requirements for performance tests for stationary RICE]

For each . . .	Complying with the requirement to . . .	You must . . .	Using . . .	According to the following requirements . . .
1. 2SLB, 4SLB, and CI	a. Reduce CO emissions	i. Measure the O_2at the inlet and outlet of the	(1) Portable CO and O_2analyzer	(a) Using ASTM D6522–00 (2005)[a](incorporated by reference, see §63.14).

stationary RICE		control device; and		Measurements to determine O2 must be made at the same time as the measurements for CO concentration.
		ii. Measure the CO at the inlet and the outlet of the control device	(1) Portable CO and O_2analyzer	(a) Using ASTM D6522–00 (2005)[a](incorporated by reference, see §63.14) or Method 10 of 40 CFR, appendix A. The CO concentration must be at 15 percent O2, dry basis.
2. 4SRB stationary RICE	a. Reduce formaldehyde emissions	i. Select the sampling port location and the number of traverse points; and	(1) Method 1 or 1A of 40 CFR part 60, appendix A §63.7(d)(1)(i)	(a) Sampling sites must be located at the inlet and outlet of the control device.
		ii. Measure O2 at the inlet and outlet of the control device; and	(1) Method 3 or 3A or 3B of 40 CFR part 60, appendix A, or ASTM Method D6522–00 (2005).	(a) Measurements to determine O2 concentration must be made at the same time as the measurements for formaldehyde concentration.
		iii. Measure moisture content at the inlet and outlet of the control device; and	(1) Method 4 of 40 CFR part 60, appendix A, or Test Method 320 of 40 CFR part 63, appendix A, or ASTM D 6348–03	(a) Measurements to determine moisture content must be made at the same time and location as the measurements for formaldehyde concentration.
		iv. Measure formaldehyde at the inlet and the outlet of the control device	(1) Method 320 or 323 of 40 CFR part 63, appendix A; or ASTM D6348–03[b], provided in ASTM D6348–03 Annex A5 (Analyte Spiking Technique), the percent R must be greater than or equal	(a) Formaldehyde concentration must be at 15 percent O2, dry basis. Results of this test consist of the average of the three 1-hour or longer runs.

			to 70 and less than or equal to 130	
3. Stationary RICE	a. Limit the concentration of formaldehyde in the stationary RICE exhaust	i. Select the sampling port location and the number of traverse points; and	(1) Method 1 or 1A of 40 CFR part 60, appendix A §63.7(d)(1)(i)	(a) If using a control device, the sampling site must be located at the outlet of the control device.
		ii. Determine the O2 concentration of the stationary RICE exhaust at the sampling port location; and	(1) Method 3 or 3A or 3B of 40 CFR part 60, appendix A, or ASTM Method D6522–00 (2005)	(a) Measurements to determine O2 concentration must be made at the same time and location as the measurements for formaldehyde concentration.
		iii. Measure moisture content of the stationary RICE exhaust at the sampling port location; and	(1) Method 4 of 40 CFR part 60, appendix A, or Test Method 320 of 40 CFR part 63, appendix A, or ASTM D 6348–03	(a) Measurements to determine moisture content must be made at the same time and location as the measurements for formaldehyde concentration.
		iv. Measure formaldehyde at the exhaust of the stationary RICE	(1) Method 320 or 323 of 40 CFR part 63, appendix A; or ASTM D6348–03[b], provided in ASTM D6348–03 Annex A5 (Analyte Spiking Technique), the percent R must be greater than or equal to 70 and less than or equal to 130	(a) Formaldehyde concentration must be at 15 percent O2, dry basis. Results of this test consist of the average of the three 1-hour or longer runs.

[a]You may also use Methods 3A and 10 as options to ASTM–D6522–00 (2005). You may obtain a copy of ASTM–D6522–00 (2005) from at least one of the following addresses: American Society for Testing and Materials, 100 Barr Harbor Drive, West Conshohocken, PA 19428–2959, or University Microfilms International, 300 North Zeeb Road, Ann Arbor, MI 48106.

[b]You may obtain a copy of ASTM–D6348–03 from at least one of the following addresses: American Society for Testing and Materials, 100 Barr Harbor Drive, West Conshohocken, PA 19428–2959, or University Microfilms International, 300 North Zeeb Road, Ann Arbor, MI 48106.

[73 FR 3609, Jan. 18, 2008]

Table 5 to Subpart ZZZZ of Part 63—Initial Compliance With Emission Limitations and Operating Limitations

[As stated in §§63.6625 and 63.6630, you must initially comply with the emission and operating limitations as required by the following]

For each . . .	Complying with the requirement to . . .	You have demonstrated initial compliance if . . .
1. 2SLB and 4SLB stationary RICE and CI stationary RICE	a. Reduce CO emissions and using oxidation catalyst, and using a CPMS	i. the average reduction of emissions of CO determined from the initial performance test achieves the required CO percent reduction; and
		ii. You have installed a CPMS to continuously monitor catalyst inlet temperature according to the requirements in §63.6625(b); and
		iii. You have recorded the catalyst pressure drop and catalyst inlet temperature during the initial performance test.
2. 2SLB and 4SLB stationary RICE and CI stationary RICE	a. Reduce CO emissions and not using oxidation catalyst	i. The average reduction of emissions of CO determined from the initial performance test achieves the required CO percent reduction; and
		ii. You have installed a CPMS to continuously monitor operating parameters approved by the Administrator (if any) according to the requirements in §63.6625(b); and
		iii. You have recorded the approved operating parameters (if any) during the initial performance test.
3. 2SLB and 4SLB stationary RICE and CI stationary RICE	a. Reduce CO emissions, and using a CEMS	i. You have installed a CEMS to continuously monitor CO and either O_2or CO_2at both the inlet and outlet of the oxidation catalyst according to the requirements in §63.6625(a); and
		ii. You have conducted a performance evaluation of your CEMS using PS 3 and 4A of 40 CFR part 60, appendix B; and
		iii. The average reduction of CO calculated using §63.6620 equals or exceeds the required percent reduction. The initial test comprises the first 4-hour period after successful validation of the CEMS.

		Compliance is based on the average percent reduction achieved during the 4-hour period.
4. 4SRB stationary RICE	a. Reduce formaldehyde emissions and using NSCR	i. The average reduction of emissions of formaldehyde determined from the initial performance test is equal to or greater than the required formaldehyde percent reduction; and
		ii. You have installed a CPMS to continuously monitor catalyst inlet temperature according to the requirements in §63.6625(b); and
		iii. You have recorded the catalyst pressure drop and catalyst inlet temperature during the initial performance test.
5. 4SRB stationary RICE	a. Reduce formaldehyde emissions and not using NSCR	i. The average reduction of emissions of formaldehyde determined from the initial performance test is equal to or greater than the required formaldehyde percent reduction; and
		ii. You have installed a CPMS to continuously monitor operating parameters approved by the Administrator (if any) according to the requirements in §63.6625(b); and
		iii. You have recorded the approved operating parameters (if any) during the initial performance test.
6. Stationary RICE	a. Limit the concentration of formaldehyde in the stationary RICE exhaust and using oxidation catalyst or NSCR	i. The average formaldehyde concentration, corrected to 15 percent O_2, dry basis, from the three test runs is less than or equal to the formaldehyde emission limitation; and
		ii. You have installed a CPMS to continuously monitor catalyst inlet temperature according to the requirements in §63.6625(b); and
		iii. You have recorded the catalyst pressure drop and catalyst inlet temperature during the initial performance test.
7. Stationary RICE	a. Limit the concentration of formaldehyde in the stationary RICE exhaust and not using oxidation catalyst or NSCR	i. The average formaldehyde concentration, corrected to 15 percent O_2, dry basis, from the three test runs is less than or equal to the formaldehyde emission limitation; and
		ii. You have installed a CPMS to continuously

		monitor operating parameters approved by the Administrator (if any) according to the requirements in §63.6625(b); and
		iii. You have recorded the approved operating parameters (if any) during the initial performance test.

Table 6 to Subpart ZZZZ of Part 63—Continuous Compliance With Emission Limitations and Operating Limitations

[As stated in §63.6640, you must continuously comply with the emissions and operating limitations as required by the following]

For each . . .	Complying with the requirement to . . .	You must demonstrate continuous compliance by . . .
1. 2SLB and 4SLB stationary RICE and CI stationary RICE	a. Reduce CO emissions and using an oxidation catalyst, and using a CPMS	i. Conducting semiannual performance tests for CO to demonstrate that the required CO percent reduction is achieved[1]; and
		ii. Collecting the catalyst inlet temperature data according to §63.6625(b); and
		iii. Reducing these data to 4-hour rolling averages; and
		iv. Maintaining the 4-hour rolling averages within the operating limitations for the catalyst inlet temperature; and
		v. Measuring the pressure drop across the catalyst once per month and demonstrating that the pressure drop across the catalyst is within the operating limitation established during the performance test.
2. 2SLB and 4SLB stationary RICE and CI stationary RICE	a. Reduce CO emissions and not using an oxidation catalyst, and using a CPMS	i. Conducting semiannual performance tests for CO to demonstrate that the required CO percent reduction is achieved[1]; and
		ii. Collecting the approved operating parameter (if any) data according to §63.6625(b); and
		iii. Reducing these data to 4-hour rolling averages; and

		iv. Maintaining the 4-hour rolling averages within the operating limitations for the operating parameters established during the performance test.
3. 2SLB and 4SLB stationary RICE and CI stationary RICE	a. Reduce CO emissions and using a CEMS	i. Collecting the monitoring data according to §63.6625(a), reducing the measurements to 1-hour averages, calculating the percent reduction of CO emissions according to §63.6620; and
		ii. Demonstrating that the catalyst achieves the required percent reduction of CO emissions over the 4-hour averaging period; and
		iii. Conducting an annual RATA of your CEMS using PS 3 and 4A of 40 CFR part 60, appendix B, as well as daily and periodic data quality checks in accordance with 40 CFR part 60, appendix F, procedure 1.
4. 4SRB stationary RICE	a. Reduce formaldehyde emissions and using NSCR	i. Collecting the catalyst inlet temperature data according to §63.6625(b); and
		ii. Reducing these data to 4-hour rolling averages; and
		iii. Maintaining the 4-hour rolling averages within the operating limitations for the catalyst inlet temperature; and
		iv. Measuring the pressure drop across the catalyst once per month and demonstrating that the pressure drop across the catalyst is within the operating limitation established during the performance test.
5. 4SRB stationary RICE	a. Reduce formaldehyde emissions and not using NSCR	i. Collecting the approved operating parameter (if any) data according to §63.6625(b); and
		ii. reducing these data to 4-hour rolling averages;
		iii. Maintaining the 4-hour rolling averages within the operating limitations for the operating parameters established during the performance test.

6. 4SRB stationary RICE with a brake horsepower ≥5,000	Reduce formaldehyde emissions	Conducting semiannual performance tests for formaldehyde to demonstrate that the required formaldehyde percent reduction is achieved[1].
7. Stationary RICE	Limit the concentration of formaldehyde in the stationary RICE exhaust and using oxidation catalyst or NSCR	i. Conducting semiannual performance tests for formaldehyde to demonstrate that your emissions remain at or below the formaldehyde concentration limit[1]; and
		ii. Collecting the catalyst inlet temperature data according to §63.6625(b); and
		iii. Reducing these data to 4-hour rolling averages; and
		iv. Maintaining the 4-hour rolling averages within the operating limitations for the catalyst inlet temperature; and
		v. Measuring the pressure drop across the catalyst once per month and demonstrating that the pressure drop across the catalyst is within the operating limitation established during the performance test.
8. Stationary RICE	Limit the concentration of formaldehyde in the stationary RICE exhaust and not using oxidation catalyst or NSCR	i. Conducting semiannual performance tests for formaldehyde to demonstrate that your emissions remain at or below the formaldehyde concentration limit[1]; and
		ii. Collecting the approved operating parameter (if any) data according to §63.6625(b); and
		ii. Reducing these data to 4-hour rolling averages; and
		iii. Maintaining the 4-hour rolling averages within the operating limitations for the operating parameters established during the performance test.

[1]After you have demonstrated compliance for two consecutive tests, you may reduce the frequency of subsequent performance tests to annually. If the results of any subsequent annual performance test indicate the stationary RICE is not in compliance with the CO or formaldehyde emission limitation, or you deviate from any of your operating limitations, you must resume semiannual performance tests.

Table 7 to Subpart ZZZZ of Part 63—Requirements for Reports

[As stated in §63.6650, you must comply with the following requirements for reports]

You must submit a(n)	The report must contain . . .	You must submit the report . . .
1. Compliance report	a. If there are no deviations from any emission limitations or operating limitations that apply to you, a statement that there were no deviations from the emission limitations or operating limitations during the reporting period. If there were no periods during which the CMS, including CEMS and CPMS, was out-of-control, as specified in §63.8(c)(7), a statement that there were not periods during which the CMS was out-of-control during the reporting period; or	i. Semiannually according to the requirements in §63.6650(b).
	b. If you had a deviation from any emission limitation or operating limitation during the reporting period, the information in §63.6650(d). If there were periods during which the CMS, including CEMS and CPMS, was out-of-control, as specified in §63.8(c)(7), the information in §63.6650(e); or	i. Semiannually according to the requirements in §63.6650(b).
	c. If you had a startup, shutdown or malfunction during the reporting period, the information in §63.10(d)(5)(i)	i. Semiannually according to the requirements in §63.6650(b).
2. An immediate startup, shutdown, and malfunction report if actions addressing the startup, shutdown, or malfunction were inconsistent with your startup, shutdown, or malfunction plan during the reporting period	a. Actions taken for the event; and	i. By fax or telephone within 2 working days after starting actions inconsistent with the plan.
	b. The information in §63.10(d)(5)(ii).	i. By letter within 7 working days after the end of the event unless you have made alternative arrangements with the permitting authorities.

		(§63.10(d)(5)(ii))
3. Report	a. The fuel flow rate of each fuel and the heating values that were used in your calculations, and you must demonstrate that the percentage of heat input provided by landfill gas or digester gas, is equivalent to 10 percent or more of the gross heat input on an annual basis; and	i. Annually, according to the requirements in §63.6650.
	b. The operating limits provided in your federally enforceable permit, and any deviations from these limits; and	i. See item 3.a.i.
	c. Any problems or errors suspected with the meters	i. See item 3.a.i.

Table 8 to Subpart ZZZZ of Part 63—Applicability of General Provisions to Subpart ZZZZ

[As stated in §63.6665, you must comply with the following applicable general provisions]

General provisions citation	Subject of citation	Applies to subpart	Explanation
§63.1	General applicability of the General Provisions	Yes	
§63.2	Definitions	Yes	Additional terms defined in §63.6675.
§63.3	Units and abbreviations	Yes	
§63.4	Prohibited activities and circumvention	Yes	
§63.5	Construction and reconstruction	Yes	
§63.6(a)	Applicability	Yes	
§63.6(b)(1)–(4)	Compliance dates for new and reconstructed sources	Yes	
§63.6(b)(5)	Notification	Yes	
§63.6(b)(6)	[Reserved]		

§63.6(b)(7)	Compliance dates for new and reconstructed area sources that become major sources	Yes	
§63.6(c)(1)–(2)	Compliance dates for existing sources	Yes	
§63.6(c)(3)–(4)	[Reserved]		
§36.6(c)(5)	Compliance dates for existing area sources that become major sources	Yes	
§63.6(d)	[Reserved]		
§63.6(e)(1)	Operation and maintenance	Yes	
§63.6(e)(2)	[Reserved]		
§63.6(e)(3)	Startup, shutdown, and malfunction plan	Yes	
§63.6(f)(1)	Applicability of standards except during startup shutdown malfunction (SSM)	Yes	
§63.6(f)(2)	Methods for determining compliance	Yes	
§63.6(f)(3)	Finding of compliance	Yes	
§63.6(g)(1)–(3)	Use of alternate standard	Yes	
§63.6(h)	Opacity and visible emission standards	No	Subpart ZZZZ does not contain opacity or visible emission standards.
§63.6(i)	Compliance extension procedures and criteria	Yes	
§63.6(j)	Presidential compliance exemption	Yes	
§63.7(a)(1)–(2)	Performance test dates	Yes	Subpart ZZZZ contains performance test dates at §§63.6610 and 63.6611.
§63.7(a)(3)	CAA section 114 authority	Yes	
§63.7(b)(1)	Notification of performance test	Yes	

§63.7(b)(2)	Notification of rescheduling	Yes	
§63.7(c)	Quality assurance/test plan	Yes	
§63.7(d)	Testing facilities	Yes	
§63.7(e)(1)	Conditions for conducting performance tests	Yes	
§63.7(e)(2)	Conduct of performance tests and reduction of data	Yes	Subpart ZZZZ specifies test methods at §63.6620.
§63.7(e)(3)	Test run duration	Yes	
§63.7(e)(4)	Administrator may require other testing under section 114 of the CAA	Yes	
§63.7(f)	Alternative test method provisions	Yes	
§63.7(g)	Performance test data analysis, recordkeeping, and reporting	Yes	
§63.7(h)	Waiver of tests	Yes	
§63.8(a)(1)	Applicability of monitoring requirements	Yes	Subpart ZZZZ contains specific requirements for monitoring at §63.6625.
§63.8(a)(2)	Performance specifications	Yes	
§63.8(a)(3)	[Reserved]		
§63.8(a)(4)	Monitoring for control devices	No	
§63.8(b)(1)	Monitoring	Yes	
§63.8(b)(2)–(3)	Multiple effluents and multiple monitoring systems	Yes	
§63.8(c)(1)	Monitoring system operation and maintenance	Yes	
§63.8(c)(1)(i)	Routine and predictable SSM	Yes	
§63.8(c)(1)(ii)	SSM not in Startup Shutdown Malfunction Plan	Yes	
§63.8(c)(1)(iii)	Compliance with operation and maintenance requirements	Yes	
§63.8(c)(2)–(3)	Monitoring system installation	Yes	

§63.8(c)(4)	Continuous monitoring system (CMS) requirements	Yes	Except that subpart ZZZZ does not require Continuous Opacity Monitoring System (COMS).
§63.8(c)(5)	COMS minimum procedures	No	Subpart ZZZZ does not require COMS.
§63.8(c)(6)–(8)	CMS requirements	Yes	Except that subpart ZZZZ does not require COMS.
§63.8(d)	CMS quality control	Yes	
§63.8(e)	CMS performance evaluation	Yes	Except for §63.8(e)(5)(ii), which applies to COMS.
§63.8(f)(1)–(5)	Alternative monitoring method	Yes	
§63.8(f)(6)	Alternative to relative accuracy test	Yes	
§63.8(g)	Data reduction	Yes	Except that provisions for COMS are not applicable. Averaging periods for demonstrating compliance are specified at §§63.6635 and 63.6640.
§63.9(a)	Applicability and State delegation of notification requirements	Yes	
§63.9(b)(1)–(5)	Initial notifications	Yes	Except that §63.9(b)(3) is reserved.
§63.9(c)	Request for compliance extension	Yes	
§63.9(d)	Notification of special compliance requirements for new sources	Yes	
§63.9(e)	Notification of performance test	Yes	
§63.9(f)	Notification of visible emission (VE)/opacity test	No	Subpart ZZZZ does not contain opacity or VE standards.
§63.9(g)(1)	Notification of performance evaluation	Yes	
§63.9(g)(2)	Notification of use of COMS data	No	Subpart ZZZZ does not contain opacity or VE standards.

§63.9(g)(3)	Notification that criterion for alternative to RATA is exceeded	Yes	If alternative is in use.
§63.9(h)(1)–(6)	Notification of compliance status	Yes	Except that notifications for sources using a CEMS are due 30 days after completion of performance evaluations. §63.9(h)(4) is reserved.
§63.9(i)	Adjustment of submittal deadlines	Yes	
§63.9(j)	Change in previous information	Yes	
§63.10(a)	Administrative provisions for record keeping/reporting	Yes	
§63.10(b)(1)	Record retention	Yes	
§63.10(b)(2)(i)–(v)	Records related to SSM	Yes	
§63.10(b)(2)(vi)–(xi)	Records	Yes	
§63.10(b)(2)(xii)	Record when under waiver	Yes	
§63.10(b)(2)(xiii)	Records when using alternative to RATA	Yes	For CO standard if using RATA alternative.
§63.10(b)(2)(xiv)	Records of supporting documentation	Yes	
§63.10(b)(3)	Records of applicability determination	Yes	
§63.10(c)	Additional records for sources using CEMS	Yes	Except that §63.10(c)(2)–(4) and (9) are reserved.
§63.10(d)(1)	General reporting requirements	Yes	
§63.10(d)(2)	Report of performance test results	Yes	
§63.10(d)(3)	Reporting opacity or VE observations	No	Subpart ZZZZ does not contain opacity or VE standards.
§63.10(d)(4)	Progress reports	Yes	
§63.10(d)(5)	Startup, shutdown, and malfunction reports	Yes	

§63.10(e)(1) and (2)(i)	Additional CMS reports	Yes	
§63.10(e)(2)(ii)	COMS-related report	No	Subpart ZZZZ does not require COMS.
§63.10(e)(3)	Excess emission and parameter exceedances reports	Yes	Except that §63.10(e)(3)(i)(C) is reserved.
§63.10(e)(4)	Reporting COMS data	No	Subpart ZZZZ does not require COMS.
§63.10(f)	Waiver for recordkeeping/reporting	Yes	
§63.11	Flares	No	
§63.12	State authority and delegations	Yes	
§63.13	Addresses	Yes	
§63.14	Incorporation by reference	Yes	
§63.15	Availability of information	Yes	

[73 FR 3610, Jan. 18, 2008]

Attachment B
to a Part 70 Operating Permit

40 CFR 60, Subpart IIII — Standards of Performance for Stationary Compression Ignition Internal Combustion Engines

Source Background and Description

Source Name:	Eli Lilly and Company, Lilly Technology Center
Source Location:	1555 South Harding Street, Indianapolis, IN 46168
County:	Marion
SIC Code:	2833, 2834
Permit Renewal No.:	T097-30149-00072
Permit Reviewer:	Josiah Balogun

The following is believed to be the correct text of the sections cited. However, in the event there is any discrepancy between this material and that of these regulatory sections as they appear in the Code of Federal Regulations, July 1, 2011 edition (the CFR), as adopted by reference by IDEM at 326 IAC 1-1-3, the language of the CFR shall govern.

Section E.2 of the permit identifies the applicable sections of this rule

Subpart IIII—Standards of Performance for Stationary Compression Ignition Internal Combustion Engines

Source: 71 FR 39172, July 11, 2006, unless otherwise noted.

What This Subpart Covers

§ 60.4200 Am I subject to this subpart?

(a) The provisions of this subpart are applicable to manufacturers, owners, and operators of stationary compression ignition (CI) internal combustion engines (ICE) as specified in paragraphs (a)(1) through (3) of this section. For the purposes of this subpart, the date that construction commences is the date the engine is ordered by the owner or operator.

(1) Manufacturers of stationary CI ICE with a displacement of less than 30 liters per cylinder where the model year is:

(i) 2007 or later, for engines that are not fire pump engines,

(ii) The model year listed in table 3 to this subpart or later model year, for fire pump engines.

(2) Owners and operators of stationary CI ICE that commence construction after July 11, 2005 where the stationary CI ICE are:

(i) Manufactured after April 1, 2006 and are not fire pump engines, or

(ii) Manufactured as a certified National Fire Protection Association (NFPA) fire pump engine after July 1, 2006.

(3) Owners and operators of stationary CI ICE that modify or reconstruct their stationary CI ICE after July 11, 2005.

(b) The provisions of this subpart are not applicable to stationary CI ICE being tested at a stationary CI ICE test cell/stand.

(c) If you are an owner or operator of an area source subject to this subpart, you are exempt from the obligation to obtain a permit under 40 CFR part 70 or 40 CFR part 71, provided you are not required to obtain a permit under 40 CFR 70.3(a) or 40 CFR 71.3(a) for a reason other than your status as an area source under this subpart. Notwithstanding the previous sentence, you must continue to comply with the provisions of this subpart applicable to area sources.

(d) Stationary CI ICE may be eligible for exemption from the requirements of this subpart as described in 40 CFR part 1068, subpart C (or the exemptions described in 40 CFR part 89, subpart J and 40 CFR part 94, subpart J, for engines that would need to be certified to standards in those parts), except that owners and operators, as well as manufacturers, may be eligible to request an exemption for national security.

Emission Standards for Manufacturers

§ 60.4201 What emission standards must I meet for non-emergency engines if I am a stationary CI internal combustion engine manufacturer?

(a) Stationary CI internal combustion engine manufacturers must certify their 2007 model year and later non-emergency stationary CI ICE with a maximum engine power less than or equal to 2,237 kilowatt (KW) (3,000 horsepower (HP)) and a displacement of less than 10 liters per cylinder to the certification emission standards for new nonroad CI engines in 40 CFR 89.112, 40 CFR 89.113, 40 CFR 1039.101, 40 CFR 1039.102, 40 CFR 1039.104, 40 CFR 1039.105, 40 CFR 1039.107, and 40 CFR 1039.115, as applicable, for all pollutants, for the same model year and maximum engine power.

(b) Stationary CI internal combustion engine manufacturers must certify their 2007 through 2010 model year non-emergency stationary CI ICE with a maximum engine power greater than 2,237 KW (3,000 HP) and a displacement of less than 10 liters per cylinder to the emission standards in table 1 to this subpart, for all pollutants, for the same maximum engine power.

(c) Stationary CI internal combustion engine manufacturers must certify their 2011 model year and later non-emergency stationary CI ICE with a maximum engine power greater than 2,237 KW (3,000 HP) and a displacement of less than 10 liters per cylinder to the certification emission standards for new nonroad CI engines in 40 CFR 1039.101, 40 CFR 1039.102, 40 CFR 1039.104, 40 CFR 1039.105, 40 CFR 1039.107, and 40 CFR 1039.115, as applicable, for all pollutants, for the same maximum engine power.

(d) Stationary CI internal combustion engine manufacturers must certify their 2007 model year and later non-emergency stationary CI ICE with a displacement of greater than or equal to 10 liters per cylinder and less than 30 liters per cylinder to the certification emission standards for new marine CI engines in 40 CFR 94.8, as applicable, for all pollutants, for the same displacement and maximum engine power.

§ 60.4202 What emission standards must I meet for emergency engines if I am a stationary CI internal combustion engine manufacturer?

(a) Stationary CI internal combustion engine manufacturers must certify their 2007 model year and later emergency stationary CI ICE with a maximum engine power less than or equal to 2,237 KW (3,000 HP) and a displacement of less than 10 liters per cylinder that are not fire pump engines to the emission standards specified in paragraphs (a)(1) through (2) of this section.

(1) For engines with a maximum engine power less than 37 KW (50 HP):

(i) The certification emission standards for new nonroad CI engines for the same model year and maximum engine power in 40 CFR 89.112 and 40 CFR 89.113 for all pollutants for model year 2007 engines, and

(ii) The certification emission standards for new nonroad CI engines in 40 CFR 1039.104, 40 CFR 1039.105, 40 CFR 1039.107, 40 CFR 1039.115, and table 2 to this subpart, for 2008 model year and later engines.

(2) For engines with a maximum engine power greater than or equal to 37 KW (50 HP), the certification emission standards for new nonroad CI engines for the same model year and maximum engine power in 40 CFR 89.112 and 40 CFR 89.113 for all pollutants beginning in model year 2007.

(b) Stationary CI internal combustion engine manufacturers must certify their 2007 model year and later emergency stationary CI ICE with a maximum engine power greater than 2,237 KW (3,000 HP) and a displacement of less than 10 liters per cylinder that are not fire pump engines to the emission standards specified in paragraphs (b)(1) through (2) of this section.

(1) For 2007 through 2010 model years, the emission standards in table 1 to this subpart, for all pollutants, for the same maximum engine power.

(2) For 2011 model year and later, the certification emission standards for new nonroad CI engines for engines of the same model year and maximum engine power in 40 CFR 89.112 and 40 CFR 89.113 for all pollutants.

(c) Stationary CI internal combustion engine manufacturers must certify their 2007 model year and later emergency stationary CI ICE with a displacement of greater than or equal to 10 liters per cylinder and less than 30 liters per cylinder that are not fire pump engines to the certification emission standards for new marine CI engines in 40 CFR 94.8, as applicable, for all pollutants, for the same displacement and maximum engine power.

(d) Beginning with the model years in table 3 to this subpart, stationary CI internal combustion engine manufacturers must certify their fire pump stationary CI ICE to the emission standards in table 4 to this subpart, for all pollutants, for the same model year and NFPA nameplate power.

§ 60.4203 How long must my engines meet the emission standards if I am a stationary CI internal combustion engine manufacturer?

Engines manufactured by stationary CI internal combustion engine manufacturers must meet the emission standards as required in §§60.4201 and 60.4202 during the useful life of the engines.

Emission Standards for Owners and Operators

§ 60.4204 What emission standards must I meet for non-emergency engines if I am an owner or operator of a stationary CI internal combustion engine?

(a) Owners and operators of pre-2007 model year non-emergency stationary CI ICE with a displacement of less than 10 liters per cylinder must comply with the emission standards in table 1 to this subpart. Owners and operators of pre-2007 model year non-emergency stationary CI ICE with a displacement of greater than or equal to 10 liters per cylinder and less than 30 liters per cylinder must comply with the emission standards in 40 CFR 94.8(a)(1).

(b) Owners and operators of 2007 model year and later non-emergency stationary CI ICE with a displacement of less than 30 liters per cylinder must comply with the emission standards for new CI engines in §60.4201 for their 2007 model year and later stationary CI ICE, as applicable.

(c) Owners and operators of non-emergency stationary CI ICE with a displacement of greater than or equal to 30 liters per cylinder must meet the requirements in paragraphs (c)(1) and (2) of this section.

(1) Reduce nitrogen oxides (NO_X) emissions by 90 percent or more, or limit the emissions of NO_Xin the stationary CI internal combustion engine exhaust to 1.6 grams per KW-hour (g/KW-hr) (1.2 grams per HP-hour (g/HP-hr)).

(2) Reduce particulate matter (PM) emissions by 60 percent or more, or limit the emissions of PM in the stationary CI internal combustion engine exhaust to 0.15 g/KW-hr (0.11 g/HP-hr).

§ 60.4205 What emission standards must I meet for emergency engines if I am an owner or operator of a stationary CI internal combustion engine?

(a) Owners and operators of pre-2007 model year emergency stationary CI ICE with a displacement of less than 10 liters per cylinder that are not fire pump engines must comply with the emission standards in table 1 to this subpart. Owners and operators of pre-2007 model year non-emergency stationary CI ICE with a displacement of greater than or equal to 10 liters per cylinder and less than 30 liters per cylinder that are not fire pump engines must comply with the emission standards in 40 CFR 94.8(a)(1).

(b) Owners and operators of 2007 model year and later emergency stationary CI ICE with a displacement of less than 30 liters per cylinder that are not fire pump engines must comply with the emission standards for new nonroad CI engines in §60.4202, for all pollutants, for the same model year and maximum engine power for their 2007 model year and later emergency stationary CI ICE.

(c) Owners and operators of fire pump engines with a displacement of less than 30 liters per cylinder must comply with the emission standards in table 4 to this subpart, for all pollutants.

(d) Owners and operators of emergency stationary CI ICE with a displacement of greater than or equal to 30 liters per cylinder must meet the requirements in paragraphs (d)(1) and (2) of this section.

(1) Reduce NO_Xemissions by 90 percent or more, or limit the emissions of NO_Xin the stationary CI internal combustion engine exhaust to 1.6 grams per KW-hour (1.2 grams per HP-hour).

(2) Reduce PM emissions by 60 percent or more, or limit the emissions of PM in the stationary CI internal combustion engine exhaust to 0.15 g/KW-hr (0.11 g/HP-hr).

§ 60.4206 How long must I meet the emission standards if I am an owner or operator of a stationary CI internal combustion engine?

Owners and operators of stationary CI ICE must operate and maintain stationary CI ICE that achieve the emission standards as required in §§60.4204 and 60.4205 according to the manufacturer's written instructions or procedures developed by the owner or operator that are approved by the engine manufacturer, over the entire life of the engine.

Fuel Requirements for Owners and Operators

§ 60.4207 What fuel requirements must I meet if I am an owner or operator of a stationary CI internal combustion engine subject to this subpart?

(a) Beginning October 1, 2007, owners and operators of stationary CI ICE subject to this subpart that use diesel fuel must use diesel fuel that meets the requirements of 40 CFR 80.510(a).

(b) Beginning October 1, 2010, owners and operators of stationary CI ICE subject to this subpart with a displacement of less than 30 liters per cylinder that use diesel fuel must use diesel fuel that meets the requirements of 40 CFR 80.510(b) for nonroad diesel fuel.

(c) Owners and operators of pre-2011 model year stationary CI ICE subject to this subpart may petition the Administrator for approval to use remaining non-compliant fuel that does not meet the fuel requirements of paragraphs (a) and (b) of this section beyond the dates required for the purpose of using up existing fuel inventories. If approved, the petition will be valid for a period of up to 6 months. If additional time is needed, the owner or operator is required to submit a new petition to the Administrator.

(d) Owners and operators of pre-2011 model year stationary CI ICE subject to this subpart that are located in areas of Alaska not accessible by the Federal Aid Highway System may petition the Administrator for approval to use any fuels mixed with used lubricating oil that do not meet the fuel requirements of paragraphs (a) and (b) of this section. Owners and operators must demonstrate in their petition to the Administrator that there is no other place to use the lubricating oil. If approved, the petition will be valid for a period of up to 6 months. If additional time is needed, the owner or operator is required to submit a new petition to the Administrator.

(e) Stationary CI ICE that have a national security exemption under §60.4200(d) are also exempt from the fuel requirements in this section.

Other Requirements for Owners and Operators

§ 60.4208 What is the deadline for importing or installing stationary CI ICE produced in the previous model year?

(a) After December 31, 2008, owners and operators may not install stationary CI ICE (excluding fire pump engines) that do not meet the applicable requirements for 2007 model year engines.

(b) After December 31, 2009, owners and operators may not install stationary CI ICE with a maximum engine power of less than 19 KW (25 HP) (excluding fire pump engines) that do not meet the applicable requirements for 2008 model year engines.

(c) After December 31, 2014, owners and operators may not install non-emergency stationary CI ICE with a maximum engine power of greater than or equal to 19 KW (25 HP) and less than 56 KW (75 HP) that do not meet the applicable requirements for 2013 model year non-emergency engines.

(d) After December 31, 2013, owners and operators may not install non-emergency stationary CI ICE with a maximum engine power of greater than or equal to 56 KW (75 HP) and less than 130 KW (175 HP) that do not meet the applicable requirements for 2012 model year non-emergency engines.

(e) After December 31, 2012, owners and operators may not install non-emergency stationary CI ICE with a maximum engine power of greater than or equal to 130 KW (175 HP), including those above 560 KW (750 HP), that do not meet the applicable requirements for 2011 model year non-emergency engines.

(f) After December 31, 2016, owners and operators may not install non-emergency stationary CI ICE with a maximum engine power of greater than or equal to 560 KW (750 HP) that do not meet the applicable requirements for 2015 model year non-emergency engines.

(g) In addition to the requirements specified in §§60.4201, 60.4202, 60.4204, and 60.4205, it is prohibited to import stationary CI ICE with a displacement of less than 30 liters per cylinder that do not meet the applicable requirements specified in paragraphs (a) through (f) of this section after the dates specified in paragraphs (a) through (f) of this section.

(h) The requirements of this section do not apply to owners or operators of stationary CI ICE that have been modified, reconstructed, and do not apply to engines that were removed from one existing location and reinstalled at a new location.

§ 60.4209 What are the monitoring requirements if I am an owner or operator of a stationary CI internal combustion engine?

If you are an owner or operator, you must meet the monitoring requirements of this section. In addition, you must also meet the monitoring requirements specified in §60.4211.

(a) If you are an owner or operator of an emergency stationary CI internal combustion engine, you must install a non-resettable hour meter prior to startup of the engine.

(b) If you are an owner or operator of a stationary CI internal combustion engine equipped with a diesel particulate filter to comply with the emission standards in §60.4204, the diesel particulate filter must be installed with a backpressure monitor that notifies the owner or operator when the high backpressure limit of the engine is approached.

Compliance Requirements

§ 60.4210 What are my compliance requirements if I am a stationary CI internal combustion engine manufacturer?

(a) Stationary CI internal combustion engine manufacturers must certify their stationary CI ICE with a displacement of less than 10 liters per cylinder to the emission standards specified in §60.4201(a) through (c) and §60.4202(a), (b) and (d) using the certification procedures required in 40 CFR part 89, subpart B, or 40 CFR part 1039, subpart C, as applicable, and must test their engines as specified in those parts. For the purposes of this subpart, engines certified to the standards in table 1 to this subpart shall be subject to the same requirements as engines certified to the standards in 40 CFR part 89. For the purposes of this subpart, engines certified to the standards in table 4 to this subpart shall be subject to the same requirements as engines certified to the standards in 40 CFR part 89, except that engines with NFPA nameplate power of less than 37 KW (50 HP) certified to model year 2011 or later standards shall be subject to the same requirements as engines certified to the standards in 40 CFR part 1039.

(b) Stationary CI internal combustion engine manufacturers must certify their stationary CI ICE with a displacement of greater than or equal to 10 liters per cylinder and less than 30 liters per cylinder to the emission standards specified in §60.4201(d) and §60.4202(c) using the certification procedures required in 40 CFR part 94 subpart C, and must test their engines as specified in 40 CFR part 94.

(c) Stationary CI internal combustion engine manufacturers must meet the requirements of 40 CFR 1039.120, 40 CFR 1039.125, 40 CFR 1039.130, 40 CFR 1039.135, and 40 CFR part 1068 for engines that are certified to the emission standards in 40 CFR part 1039. Stationary CI internal combustion engine manufacturers must meet the corresponding provisions of 40 CFR part 89 or 40 CFR part 94 for engines that would be covered by that part if they were nonroad (including marine) engines. Labels on such engines must refer to stationary engines, rather than or in addition to nonroad or marine engines, as appropriate. Stationary CI internal combustion engine manufacturers must label their engines according to paragraphs (c)(1) through (3) of this section.

(1) Stationary CI internal combustion engines manufactured from January 1, 2006 to March 31, 2006 (January 1, 2006 to June 30, 2006 for fire pump engines), other than those that are part of certified engine families under the nonroad CI engine regulations, must be labeled according to 40 CFR 1039.20.

(2) Stationary CI internal combustion engines manufactured from April 1, 2006 to December 31, 2006 (or, for fire pump engines, July 1, 2006 to December 31 of the year preceding the year listed in table 3 to this subpart) must be labeled according to paragraphs (c)(2)(i) through (iii) of this section:

(i) Stationary CI internal combustion engines that are part of certified engine families under the nonroad regulations must meet the labeling requirements for nonroad CI engines, but do not have to meet the labeling requirements in 40 CFR 1039.20.

(ii) Stationary CI internal combustion engines that meet Tier 1 requirements (or requirements for fire pumps) under this subpart, but do not meet the requirements applicable to nonroad CI engines must be labeled according to 40 CFR 1039.20. The engine manufacturer may add language to the label clarifying that the engine meets Tier 1 requirements (or requirements for fire pumps) of this subpart.

(iii) Stationary CI internal combustion engines manufactured after April 1, 2006 that do not meet Tier 1 requirements of this subpart, or fire pumps engines manufactured after July 1, 2006 that do not meet the requirements for fire pumps under this subpart, may not be used in the U.S. If any such engines are manufactured in the U.S. after April 1, 2006 (July 1, 2006 for fire pump engines), they must be exported or must be brought into compliance with the appropriate standards prior to initial operation. The export provisions of 40 CFR 1068.230 would apply to engines for export and the manufacturers must label such engines according to 40 CFR 1068.230.

(3) Stationary CI internal combustion engines manufactured after January 1, 2007 (for fire pump engines, after January 1 of the year listed in table 3 to this subpart, as applicable) must be labeled according to paragraphs (c)(3)(i) through (iii) of this section.

(i) Stationary CI internal combustion engines that meet the requirements of this subpart and the corresponding requirements for nonroad (including marine) engines of the same model year and HP must be labeled according to the provisions in part 89, 94 or 1039, as appropriate.

(ii) Stationary CI internal combustion engines that meet the requirements of this subpart, but are not certified to the standards applicable to nonroad (including marine) engines of the same model year and HP must be labeled according to the provisions in part 89, 94 or 1039, as appropriate, but the words “stationary” must be included instead of “nonroad” or “marine” on the label. In addition, such engines must be labeled according to 40 CFR 1039.20.

(iii) Stationary CI internal combustion engines that do not meet the requirements of this subpart must be labeled according to 40 CFR 1068.230 and must be exported under the provisions of 40 CFR 1068.230.

(d) An engine manufacturer certifying an engine family or families to standards under this subpart that are identical to standards applicable under parts 89, 94, or 1039 for that model year may certify any such family that contains both nonroad (including marine) and stationary engines as a single engine family and/or may include any such family containing stationary engines in the averaging, banking and trading provisions applicable for such engines under those parts.

(e) Manufacturers of engine families discussed in paragraph (d) of this section may meet the labeling requirements referred to in paragraph (c) of this section for stationary CI ICE by either adding a separate label containing the information required in paragraph (c) of this section or by adding the words “and stationary” after the word “nonroad” or “marine,” as appropriate, to the label.

(f) Starting with the model years shown in table 5 to this subpart, stationary CI internal combustion engine manufacturers must add a permanent label stating that the engine is for stationary emergency use only to each new emergency stationary CI internal combustion engine greater than or equal to 19 KW (25 HP) that meets all the emission standards for emergency engines in §60.4202 but does not meet all the emission standards for non-emergency engines in §60.4201. The label must be added according to the labeling requirements specified in 40 CFR 1039.135(b). Engine manufacturers must specify in the owner's manual that operation of emergency engines is limited to emergency operations and required maintenance and testing.

(g) Manufacturers of fire pump engines may use the test cycle in table 6 to this subpart for testing fire pump engines and may test at the NFPA certified nameplate HP, provided that the engine is labeled as “Fire Pump Applications Only”.

(h) Engine manufacturers, including importers, may introduce into commerce uncertified engines or engines certified to earlier standards that were manufactured before the new or changed standards took effect until inventories are depleted, as long as such engines are part of normal inventory. For example, if the engine manufacturers' normal industry practice is to keep on hand a one-month supply of engines based on its projected sales, and a new tier of standards starts to apply for the 2009 model year, the engine manufacturer may manufacture engines based on the normal inventory requirements late in the 2008 model year, and sell those engines for installation. The engine manufacturer may not circumvent the provisions of §§60.4201 or 60.4202 by stockpiling engines that are built before new or changed standards take effect. Stockpiling of such engines beyond normal industry practice is a violation of this subpart.

(i) The replacement engine provisions of 40 CFR 89.1003(b)(7), 40 CFR 94.1103(b)(3), 40 CFR 94.1103(b)(4) and 40 CFR 1068.240 are applicable to stationary CI engines replacing existing equipment that is less than 15 years old.

§ 60.4211 What are my compliance requirements if I am an owner or operator of a stationary CI internal combustion engine?

(a) If you are an owner or operator and must comply with the emission standards specified in this subpart, you must operate and maintain the stationary CI internal combustion engine and control device according to the manufacturer's

written instructions or procedures developed by the owner or operator that are approved by the engine manufacturer. In addition, owners and operators may only change those settings that are permitted by the manufacturer. You must also meet the requirements of 40 CFR parts 89, 94 and/or 1068, as they apply to you.

(b) If you are an owner or operator of a pre-2007 model year stationary CI internal combustion engine and must comply with the emission standards specified in §§60.4204(a) or 60.4205(a), or if you are an owner or operator of a CI fire pump engine that is manufactured prior to the model years in table 3 to this subpart and must comply with the emission standards specified in §60.4205(c), you must demonstrate compliance according to one of the methods specified in paragraphs (b)(1) through (5) of this section.

(1) Purchasing an engine certified according to 40 CFR part 89 or 40 CFR part 94, as applicable, for the same model year and maximum engine power. The engine must be installed and configured according to the manufacturer's specifications.

(2) Keeping records of performance test results for each pollutant for a test conducted on a similar engine. The test must have been conducted using the same methods specified in this subpart and these methods must have been followed correctly.

(3) Keeping records of engine manufacturer data indicating compliance with the standards.

(4) Keeping records of control device vendor data indicating compliance with the standards.

(5) Conducting an initial performance test to demonstrate compliance with the emission standards according to the requirements specified in §60.4212, as applicable.

(c) If you are an owner or operator of a 2007 model year and later stationary CI internal combustion engine and must comply with the emission standards specified in §60.4204(b) or §60.4205(b), or if you are an owner or operator of a CI fire pump engine that is manufactured during or after the model year that applies to your fire pump engine power rating in table 3 to this subpart and must comply with the emission standards specified in §60.4205(c), you must comply by purchasing an engine certified to the emission standards in §60.4204(b), or §60.4205(b) or (c), as applicable, for the same model year and maximum (or in the case of fire pumps, NFPA nameplate) engine power. The engine must be installed and configured according to the manufacturer's specifications.

(d) If you are an owner or operator and must comply with the emission standards specified in §60.4204(c) or §60.4205(d), you must demonstrate compliance according to the requirements specified in paragraphs (d)(1) through (3) of this section.

(1) Conducting an initial performance test to demonstrate initial compliance with the emission standards as specified in §60.4213.

(2) Establishing operating parameters to be monitored continuously to ensure the stationary internal combustion engine continues to meet the emission standards. The owner or operator must petition the Administrator for approval of operating parameters to be monitored continuously. The petition must include the information described in paragraphs (d)(2)(i) through (v) of this section.

(i) Identification of the specific parameters you propose to monitor continuously;

(ii) A discussion of the relationship between these parameters and $NO_X$and PM emissions, identifying how the emissions of these pollutants change with changes in these parameters, and how limitations on these parameters will serve to limit $NO_X$and PM emissions;

(iii) A discussion of how you will establish the upper and/or lower values for these parameters which will establish the limits on these parameters in the operating limitations;

(iv) A discussion identifying the methods and the instruments you will use to monitor these parameters, as well as the relative accuracy and precision of these methods and instruments; and

(v) A discussion identifying the frequency and methods for recalibrating the instruments you will use for monitoring these parameters.

(3) For non-emergency engines with a displacement of greater than or equal to 30 liters per cylinder, conducting annual performance tests to demonstrate continuous compliance with the emission standards as specified in §60.4213.

(e) Emergency stationary ICE may be operated for the purpose of maintenance checks and readiness testing, provided that the tests are recommended by Federal, State, or local government, the manufacturer, the vendor, or the insurance company associated with the engine. Maintenance checks and readiness testing of such units is limited to 100 hours per year. There is no time limit on the use of emergency stationary ICE in emergency situations. Anyone may petition the Administrator for approval of additional hours to be used for maintenance checks and readiness testing, but a petition is not required if the owner or operator maintains records indicating that Federal, State, or local standards require maintenance and testing of emergency ICE beyond 100 hours per year. For owners and operators of emergency engines meeting standards under §60.4205 but not §60.4204, any operation other than emergency operation, and maintenance and testing as permitted in this section, is prohibited.

Testing Requirements for Owners and Operators

§ 60.4212 What test methods and other procedures must I use if I am an owner or operator of a stationary CI internal combustion engine with a displacement of less than 30 liters per cylinder?

Owners and operators of stationary CI ICE with a displacement of less than 30 liters per cylinder who conduct performance tests pursuant to this subpart must do so according to paragraphs (a) through (d) of this section.

(a) The performance test must be conducted according to the in-use testing procedures in 40 CFR part 1039, subpart F.

(b) Exhaust emissions from stationary CI ICE that are complying with the emission standards for new CI engines in 40 CFR part 1039 must not exceed the not-to-exceed (NTE) standards for the same model year and maximum engine power as required in 40 CFR 1039.101(e) and 40 CFR 1039.102(g)(1), except as specified in 40 CFR 1039.104(d). This requirement starts when NTE requirements take effect for nonroad diesel engines under 40 CFR part 1039.

(c) Exhaust emissions from stationary CI ICE that are complying with the emission standards for new CI engines in 40 CFR 89.112 or 40 CFR 94.8, as applicable, must not exceed the NTE numerical requirements, rounded to the same number of decimal places as the applicable standard in 40 CFR 89.112 or 40 CFR 94.8, as applicable, determined from the following equation:

$$\text{NTE requirement for each pollutant} = (1.25) \times (\text{STD}) \qquad \text{(Eq. 1)}$$

Where:

STD = The standard specified for that pollutant in 40 CFR 89.112 or 40 CFR 94.8, as applicable.

Alternatively, stationary CI ICE that are complying with the emission standards for new CI engines in 40 CFR 89.112 or 40 CFR 94.8 may follow the testing procedures specified in §60.4213 of this subpart, as appropriate.

(d) Exhaust emissions from stationary CI ICE that are complying with the emission standards for pre-2007 model year engines in §60.4204(a), §60.4205(a), or §60.4205(c) must not exceed the NTE numerical requirements, rounded to the same number of decimal places as the applicable standard in §60.4204(a), §60.4205(a), or §60.4205(c), determined from the equation in paragraph (c) of this section.

Where:

STD = The standard specified for that pollutant in §60.4204(a), §60.4205(a), or §60.4205(c).

Alternatively, stationary CI ICE that are complying with the emission standards for pre-2007 model year engines in §60.4204(a), §60.4205(a), or §60.4205(c) may follow the testing procedures specified in §60.4213, as appropriate.

§ 60.4213 What test methods and other procedures must I use if I am an owner or operator of a stationary CI internal combustion engine with a displacement of greater than or equal to 30 liters per cylinder?

Owners and operators of stationary CI ICE with a displacement of greater than or equal to 30 liters per cylinder must conduct performance tests according to paragraphs (a) through (d) of this section.

(a) Each performance test must be conducted according to the requirements in §60.8 and under the specific conditions that this subpart specifies in table 7. The test must be conducted within 10 percent of 100 percent peak (or the highest achievable) load.

(b) You may not conduct performance tests during periods of startup, shutdown, or malfunction, as specified in §60.8(c).

(c) You must conduct three separate test runs for each performance test required in this section, as specified in §60.8(f). Each test run must last at least 1 hour.

(d) To determine compliance with the percent reduction requirement, you must follow the requirements as specified in paragraphs (d)(1) through (3) of this section.

(1) You must use Equation 2 of this section to determine compliance with the percent reduction requirement:

$$\frac{C_i - C_o}{C_i} \times 100 = R \qquad \text{(Eq. 2)}$$

Where:

C_i= concentration of NO_Xor PM at the control device inlet,

C_o= concentration of NO_Xor PM at the control device outlet, and

R = percent reduction of NO_Xor PM emissions.

(2) You must normalize the NO_Xor PM concentrations at the inlet and outlet of the control device to a dry basis and to 15 percent oxygen (O_2) using Equation 3 of this section, or an equivalent percent carbon dioxide (CO_2) using the procedures described in paragraph (d)(3) of this section.

$$C_{adj} = C_d \frac{5.9}{20.9 - \% O_2} \qquad \text{(Eq. 3)}$$

Where:

C_{adj}= Calculated NO_Xor PM concentration adjusted to 15 percent O_2.

C_d= Measured concentration of NO_Xor PM, uncorrected.

5.9 = 20.9 percent O_2−15 percent O_2, the defined O_2correction value, percent.

%O_2= Measured O_2concentration, dry basis, percent.

(3) If pollutant concentrations are to be corrected to 15 percent $O_2$and CO_2concentration is measured in lieu of O_2concentration measurement, a CO_2correction factor is needed. Calculate the CO_2correction factor as described in paragraphs (d)(3)(i) through (iii) of this section.

(i) Calculate the fuel-specific $F_o$value for the fuel burned during the test using values obtained from Method 19, Section 5.2, and the following equation:

$$F_o = \frac{0.209 F_d}{F_c} \qquad \text{(Eq. 4)}$$

Where:

F_o= Fuel factor based on the ratio of O_2volume to the ultimate CO_2volume produced by the fuel at zero percent excess air.

0.209 = Fraction of air that is O_2, percent/100.

F_d= Ratio of the volume of dry effluent gas to the gross calorific value of the fuel from Method 19, dsm^3 /J (dscf/10^6 Btu).

F_c= Ratio of the volume of CO_2produced to the gross calorific value of the fuel from Method 19, dsm^3 /J (dscf/10^6 Btu).

(ii) Calculate the CO_2correction factor for correcting measurement data to 15 percent O_2, as follows:

$$X_{CO_2} = \frac{5.9}{F_o} \qquad \text{(Eq. 5)}$$

Where:

X_{CO2}= CO_2correction factor, percent.

5.9 = 20.9 percent O_2−15 percent O_2, the defined O_2correction value, percent.

(iii) Calculate the $NO_X$and PM gas concentrations adjusted to 15 percent O_2using CO_2as follows:

$$C_{adj} = C_d \frac{X_{CO_2}}{\%CO_2} \qquad \text{(Eq. 6)}$$

Where:

C_{adj}= Calculated NO_Xor PM concentration adjusted to 15 percent O_2.

C_d= Measured concentration of NO_Xor PM, uncorrected.

%CO_2= Measured CO_2concentration, dry basis, percent.

(e) To determine compliance with the NO_Xmass per unit output emission limitation, convert the concentration of NO_Xin the engine exhaust using Equation 7 of this section:

$$ER = \frac{C_d \times 1.912 \times 10^{-3} \times Q \times T}{\text{KW-hour}} \qquad \text{(Eq. 7)}$$

Where:

ER = Emission rate in grams per KW-hour.

C_d= Measured NO_Xconcentration in ppm.

1.912×10^{-3}= Conversion constant for ppm $NO_X$to grams per standard cubic meter at 25 degrees Celsius.

Q = Stack gas volumetric flow rate, in standard cubic meter per hour.

T = Time of test run, in hours.

KW-hour = Brake work of the engine, in KW-hour.

(f) To determine compliance with the PM mass per unit output emission limitation, convert the concentration of PM in the engine exhaust using Equation 8 of this section:

$$ER = \frac{C_{adj} \times Q \times T}{\text{KW-hour}} \qquad \text{(Eq. 8)}$$

Where:

ER = Emission rate in grams per KW-hour.

C_{adj}= Calculated PM concentration in grams per standard cubic meter.

Q = Stack gas volumetric flow rate, in standard cubic meter per hour.

T = Time of test run, in hours.

KW-hour = Energy output of the engine, in KW.

Notification, Reports, and Records for Owners and Operators

§ 60.4214 What are my notification, reporting, and recordkeeping requirements if I am an owner or operator of a stationary CI internal combustion engine?

(a) Owners and operators of non-emergency stationary CI ICE that are greater than 2,237 KW (3,000 HP), or have a displacement of greater than or equal to 10 liters per cylinder, or are pre-2007 model year engines that are greater than 130 KW (175 HP) and not certified, must meet the requirements of paragraphs (a)(1) and (2) of this section.

(1) Submit an initial notification as required in §60.7(a)(1). The notification must include the information in paragraphs (a)(1)(i) through (v) of this section.

(i) Name and address of the owner or operator;

(ii) The address of the affected source;

(iii) Engine information including make, model, engine family, serial number, model year, maximum engine power, and engine displacement;

(iv) Emission control equipment; and

(v) Fuel used.

(2) Keep records of the information in paragraphs (a)(2)(i) through (iv) of this section.

(i) All notifications submitted to comply with this subpart and all documentation supporting any notification.

(ii) Maintenance conducted on the engine.

(iii) If the stationary CI internal combustion is a certified engine, documentation from the manufacturer that the engine is certified to meet the emission standards.

(iv) If the stationary CI internal combustion is not a certified engine, documentation that the engine meets the emission standards.

(b) If the stationary CI internal combustion engine is an emergency stationary internal combustion engine, the owner or operator is not required to submit an initial notification. Starting with the model years in table 5 to this subpart, if the emergency engine does not meet the standards applicable to non-emergency engines in the applicable model year, the owner or operator must keep records of the operation of the engine in emergency and non-emergency service that are recorded through the non-resettable hour meter. The owner must record the time of operation of the engine and the reason the engine was in operation during that time.

(c) If the stationary CI internal combustion engine is equipped with a diesel particulate filter, the owner or operator must keep records of any corrective action taken after the backpressure monitor has notified the owner or operator that the high backpressure limit of the engine is approached.

Special Requirements

§ 60.4215 What requirements must I meet for engines used in Guam, American Samoa, or the Commonwealth of the Northern Mariana Islands?

(a) Stationary CI ICE that are used in Guam, American Samoa, or the Commonwealth of the Northern Mariana Islands are required to meet the applicable emission standards in §60.4205. Non-emergency stationary CI ICE with a displacement of greater than or equal to 30 liters per cylinder, must meet the applicable emission standards in §60.4204(c).

(b) Stationary CI ICE that are used in Guam, American Samoa, or the Commonwealth of the Northern Mariana Islands are not required to meet the fuel requirements in §60.4207.

§ 60.4216 What requirements must I meet for engines used in Alaska?

(a) Prior to December 1, 2010, owners and operators of stationary CI engines located in areas of Alaska not accessible by the Federal Aid Highway System should refer to 40 CFR part 69 to determine the diesel fuel requirements applicable to such engines.

(b) The Governor of Alaska may submit for EPA approval, by no later than January 11, 2008, an alternative plan for implementing the requirements of 40 CFR part 60, subpart IIII, for public-sector electrical utilities located in rural areas of Alaska not accessible by the Federal Aid Highway System. This alternative plan must be based on the requirements of section 111 of the Clean Air Act including any increased risks to human health and the environment and must also be based on the unique circumstances related to remote power generation, climatic conditions, and serious economic impacts resulting from implementation of 40 CFR part 60, subpart IIII. If EPA approves by rulemaking process an alternative plan, the provisions as approved by EPA under that plan shall apply to the diesel engines used in new stationary internal combustion engines subject to this paragraph.

§ 60.4217 What emission standards must I meet if I am an owner or operator of a stationary internal combustion engine using special fuels?

(a) Owners and operators of stationary CI ICE that do not use diesel fuel, or who have been given authority by the Administrator under §60.4207(d) of this subpart to use fuels that do not meet the fuel requirements of paragraphs (a) and (b) of §60.4207, may petition the Administrator for approval of alternative emission standards, if they can demonstrate that they use a fuel that is not the fuel on which the manufacturer of the engine certified the engine and that the engine cannot meet the applicable standards required in §60.4202 or §60.4203 using such fuels.

(b) [Reserved]

General Provisions

§ 60.4218 What parts of the General Provisions apply to me?

Table 8 to this subpart shows which parts of the General Provisions in §§60.1 through 60.19 apply to you.

Definitions

§ 60.4219 What definitions apply to this subpart?

As used in this subpart, all terms not defined herein shall have the meaning given them in the CAA and in subpart A of this part.

Combustion turbine means all equipment, including but not limited to the turbine, the fuel, air, lubrication and exhaust gas systems, control systems (except emissions control equipment), and any ancillary components and sub-components comprising any simple cycle combustion turbine, any regenerative/recuperative cycle combustion turbine, the combustion turbine portion of any cogeneration cycle combustion system, or the combustion turbine portion of any combined cycle steam/electric generating system.

Compression ignition means relating to a type of stationary internal combustion engine that is not a spark ignition engine.

Diesel fuel means any liquid obtained from the distillation of petroleum with a boiling point of approximately 150 to 360 degrees Celsius. One commonly used form is number 2 distillate oil.

Diesel particulate filter means an emission control technology that reduces PM emissions by trapping the particles in a flow filter substrate and periodically removes the collected particles by either physical action or by oxidizing (burning off) the particles in a process called regeneration.

Emergency stationary internal combustion engine means any stationary internal combustion engine whose operation is limited to emergency situations and required testing and maintenance. Examples include stationary ICE used to produce power for critical networks or equipment (including power supplied to portions of a facility) when electric power from the local utility (or the normal power source, if the facility runs on its own power production) is interrupted, or stationary ICE used to pump water in the case of fire or flood, etc. Stationary CI ICE used to supply power to an

electric grid or that supply power as part of a financial arrangement with another entity are not considered to be emergency engines.

Engine manufacturer means the manufacturer of the engine. See the definition of “manufacturer” in this section.

Fire pump engine means an emergency stationary internal combustion engine certified to NFPA requirements that is used to provide power to pump water for fire suppression or protection.

Manufacturer has the meaning given in section 216(1) of the Act. In general, this term includes any person who manufactures a stationary engine for sale in the United States or otherwise introduces a new stationary engine into commerce in the United States. This includes importers who import stationary engines for sale or resale.

Maximum engine power means maximum engine power as defined in 40 CFR 1039.801.

Model year means either:

(1) The calendar year in which the engine was originally produced, or

(2) The annual new model production period of the engine manufacturer if it is different than the calendar year. This must include January 1 of the calendar year for which the model year is named. It may not begin before January 2 of the previous calendar year and it must end by December 31 of the named calendar year. For an engine that is converted to a stationary engine after being placed into service as a nonroad or other non-stationary engine, model year means the calendar year or new model production period in which the engine was originally produced.

Other internal combustion engine means any internal combustion engine, except combustion turbines, which is not a reciprocating internal combustion engine or rotary internal combustion engine.

Reciprocating internal combustion engine means any internal combustion engine which uses reciprocating motion to convert heat energy into mechanical work.

Rotary internal combustion engine means any internal combustion engine which uses rotary motion to convert heat energy into mechanical work.

Spark ignition means relating to a gasoline, natural gas, or liquefied petroleum gas fueled engine or any other type of engine with a spark plug (or other sparking device) and with operating characteristics significantly similar to the theoretical Otto combustion cycle. Spark ignition engines usually use a throttle to regulate intake air flow to control power during normal operation. Dual-fuel engines in which a liquid fuel (typically diesel fuel) is used for CI and gaseous fuel (typically natural gas) is used as the primary fuel at an annual average ratio of less than 2 parts diesel fuel to 100 parts total fuel on an energy equivalent basis are spark ignition engines.

Stationary internal combustion engine means any internal combustion engine, except combustion turbines, that converts heat energy into mechanical work and is not mobile. Stationary ICE differ from mobile ICE in that a stationary internal combustion engine is not a nonroad engine as defined at 40 CFR 1068.30 (excluding paragraph (2)(ii) of that definition), and is not used to propel a motor vehicle or a vehicle used solely for competition. Stationary ICE include reciprocating ICE, rotary ICE, and other ICE, except combustion turbines.

Subpart means 40 CFR part 60, subpart IIII.

Useful life means the period during which the engine is designed to properly function in terms of reliability and fuel consumption, without being remanufactured, specified as a number of hours of operation or calendar years, whichever comes first. The values for useful life for stationary CI ICE with a displacement of less than 10 liters per cylinder are given in 40 CFR 1039.101(g). The values for useful life for stationary CI ICE with a displacement of greater than or equal to 10 liters per cylinder and less than 30 liters per cylinder are given in 40 CFR 94.9(a).

Table 1 to Subpart IIII of Part 60—Emission Standards for Stationary Pre-2007 Model Year Engines With a Displacement of <10 Liters per Cylinder

and 2007–2010 Model Year Engines >2,237 KW (3,000 HP) and With a Displacement of <10 Liters per Cylinder

[As stated in §§60.4201(b), 60.4202(b), 60.4204(a), and 60.4205(a), you must comply with the following emission standards]

Maximum engine power	Emission standards for stationary pre-2007 model year engines with a displacement of <10 liters per cylinder and 2007–2010 model year engines >2,237 KW (3,000 HP) and with a displacement of <10 liters per cylinder in g/KW-hr (g/HP-hr)				
	NMHC + NO_X	HC	NO_X	CO	PM
KW<8 (HP<11)	10.5 (7.8)			8.0 (6.0)	1.0 (0.75)
8≤KW<19 (11≤HP<25)	9.5 (7.1)			6.6 (4.9)	0.80 (0.60)
19≤KW<37 (25≤HP<50)	9.5 (7.1)			5.5 (4.1)	0.80 (0.60)
37≤KW<56 (50≤HP<75)			9.2 (6.9)		
56≤KW<75 (75≤HP<100)			9.2 (6.9)		
75≤KW<130 (100≤HP<175)			9.2 (6.9)		
130≤KW<225 (175≤HP<300)		1.3 (1.0)	9.2 (6.9)	11.4 (8.5)	0.54 (0.40)
225≤KW<450 (300≤HP<600)		1.3 (1.0)	9.2 (6.9)	11.4 (8.5)	0.54 (0.40)
450≤KW≤560 (600≤HP≤750)		1.3 (1.0)	9.2 (6.9)	11.4 (8.5)	0.54 (0.40)
KW>560 (HP>750)		1.3 (1.0)	9.2 (6.9)	11.4 (8.5)	0.54 (0.40)

Table 2 to Subpart IIII of Part 60—Emission Standards for 2008 Model Year and Later Emergency Stationary CI ICE <37 KW (50 HP) With a Displacement of <10 Liters per Cylinder

[As stated in §60.4202(a)(1), you must comply with the following emission standards]

Engine power	Emission standards for 2008 model year and later emergency stationary CI ICE <37 KW (50 HP) with a displacement of <10 liters per cylinder in g/KW-hr (g/HP-hr)

	Model year(s)	NO_X+ NMHC	CO	PM
KW<8 (HP<11)	2008+	7.5 (5.6)	8.0 (6.0)	0.40 (0.30)
8≤KW<19 (11≤HP<25)	2008+	7.5 (5.6)	6.6 (4.9)	0.40 (0.30)
19≤KW<37 (25≤HP<50)	2008+	7.5 (5.6)	5.5 (4.1)	0.30 (0.22)

Table 3 to Subpart IIII of Part 60—Certification Requirements for Stationary Fire Pump Engines

[As stated in §60.4202(d), you must certify new stationary fire pump engines beginning with the following model years:]

Engine power	Starting model year engine manufacturers must certify new stationary fire pump engines according to §60.4202(d)
KW<75 (HP<100)	2011
75≤KW<130 (100≤HP<175)	2010
130≤KW≤560 (175≤HP≤750)	2009
KW>560 (HP>750)	2008

Table 4 to Subpart IIII of Part 60—Emission Standards for Stationary Fire Pump Engines

[As stated in §§60.4202(d) and 60.4205(c), you must comply with the following emission standards for stationary fire pump engines]

Maximum engine power	Model year(s)	NMHC + NO_X	CO	PM
KW<8 (HP<11)	2010 and earlier	10.5 (7.8)	8.0 (6.0)	1.0 (0.75)
	2011+	7.5 (5.6)		0.40 (0.30)
8≤KW<19 (11≤HP<25)	2010 and earlier	9.5 (7.1)	6.6 (4.9)	0.80 (0.60)
	2011+	7.5 (5.6)		0.40 (0.30)
19≤KW<37 (25≤HP<50)	2010 and earlier	9.5 (7.1)	5.5 (4.1)	0.80 (0.60)
	2011+	7.5 (5.6)		0.30 (0.22)
37≤KW<56 (50≤HP<75)	2010 and earlier	10.5 (7.8)	5.0 (3.7)	0.80 (0.60)

	2011+[1]	4.7 (3.5)		0.40 (0.30)
56≤KW<75 (75≤HP<100)	2010 and earlier	10.5 (7.8)	5.0 (3.7)	0.80 (0.60)
	2011+[1]	4.7 (3.5)		0.40 (0.30)
75≤KW<130 (100≤HP<175)	2009 and earlier	10.5 (7.8)	5.0 (3.7)	0.80 (0.60)
	2010+[2]	4.0 (3.0)		0.30 (0.22)
130≤KW<225 (175≤HP<300)	2008 and earlier	10.5 (7.8)	3.5 (2.6)	0.54 (0.40)
	2009+[3]	4.0 (3.0)		0.20 (0.15)
225≤KW<450 (300≤HP<600)	2008 and earlier	10.5 (7.8)	3.5 (2.6)	0.54 (0.40)
	2009+[3]	4.0 (3.0)		0.20 (0.15)
450≤KW≤560 (600≤HP≤750)	2008 and earlier	10.5 (7.8)	3.5 (2.6)	0.54 (0.40)
	2009+	4.0 (3.0)		0.20 (0.15)
KW>560 (HP>750)	2007 and earlier	10.5 (7.8)	3.5 (2.6)	0.54 (0.40)
	2008+	6.4 (4.8)		0.20 (0.15)

[1]For model years 2011–2013, manufacturers, owners and operators of fire pump stationary CI ICE in this engine power category with a rated speed of greater than 2,650 revolutions per minute (rpm) may comply with the emission limitations for 2010 model year engines.

[2]For model years 2010–2012, manufacturers, owners and operators of fire pump stationary CI ICE in this engine power category with a rated speed of greater than 2,650 rpm may comply with the emission limitations for 2009 model year engines.

[3]In model years 2009–2011, manufacturers of fire pump stationary CI ICE in this engine power category with a rated speed of greater than 2,650 rpm may comply with the emission limitations for 2008 model year engines.

Table 5 to Subpart IIII of Part 60—Labeling and Recordkeeping Requirements for New Stationary Emergency Engines

[You must comply with the labeling requirements in §60.4210(f) and the recordkeeping requirements in §60.4214(b) for new emergency stationary CI ICE beginning in the following model years:]

Engine power	Starting model year
19≤KW<56 (25≤HP<75)	2013
56≤KW<130 (75≤HP<175)	2012
KW≥130 (HP≥175)	2011

Table 6 to Subpart IIII of Part 60—Optional 3-Mode Test Cycle for Stationary Fire Pump Engines

[As stated in §60.4210(g), manufacturers of fire pump engines may use the following test cycle for testing fire pump engines:]

Mode No.	Engine speed[1]	Torque (percent)[2]	Weighting factors
1	Rated	100	0.30
2	Rated	75	0.50
3	Rated	50	0.20

[1]Engine speed: ±2 percent of point.

[2]Torque: NFPA certified nameplate HP for 100 percent point. All points should be ±2 percent of engine percent load value.

Table 7 to Subpart IIII of Part 60—Requirements for Performance Tests for Stationary CI ICE With a Displacement of ≥30 Liters per Cylinder

[As stated in §60.4213, you must comply with the following requirements for performance tests for stationary CI ICE with a displacement of ≥30 liters per cylinder:]

For each	Complying with the requirement to	You must	Using	According to the following requirements
1. Stationary CI internal combustion engine with a displacement of ≥30 liters per cylinder	a. Reduce NO_Xemissions by 90 percent or more	i. Select the sampling port location and the number of traverse points;	(1) Method 1 or 1A of 40 CFR part 60, appendix A	(a) Sampling sites must be located at the inlet and outlet of the control device.
		ii. Measure O_2at the inlet and outlet of the control device;	(2) Method 3, 3A, or 3B of 40 CFR part 60, appendix A	(b) Measurements to determine O_2concentration must be made at the same time as the measurements for NO_Xconcentration.
		iii. If necessary, measure moisture content at the inlet and outlet of the control device; and,	(3) Method 4 of 40 CFR part 60, appendix A, Method 320 of 40 CFR part 63, appendix A, or	(c) Measurements to determine moisture content must be made at the same time as the measurements for NO_Xconcentration.

			ASTM D 6348–03 (incorporated by reference, see §60.17)	
		iv. Measure NO_Xat the inlet and outlet of the control device	(4) Method 7E of 40 CFR part 60, appendix A, Method 320 of 40 CFR part 63, appendix A, or ASTM D 6348–03 (incorporated by reference, see §60.17)	(d) NO_Xconcentration must be at 15 percent O_2, dry basis. Results of this test consist of the average of the three 1-hour or longer runs.
	b. Limit the concentration of NO_Xin the stationary CI internal combustion engine exhaust.	i. Select the sampling port location and the number of traverse points;	(1) Method 1 or 1A of 40 CFR part 60, appendix A	(a) If using a control device, the sampling site must be located at the outlet of the control device.
		ii. Determine the O_2concentration of the stationary internal combustion engine exhaust at the sampling port location; and,	(2) Method 3, 3A, or 3B of 40 CFR part 60, appendix A	(b) Measurements to determine O_2concentration must be made at the same time as the measurement for NO_Xconcentration.
		iii. If necessary, measure moisture content of the stationary internal combustion engine exhaust at the sampling port location; and,	(3) Method 4 of 40 CFR part 60, appendix A, Method 320 of 40 CFR part 63, appendix A, or ASTM D 6348–03 (incorporated by reference, see §60.17)	(c) Measurements to determine moisture content must be made at the same time as the measurement for NO_Xconcentration.
		iv. Measure NO_Xat the exhaust of the stationary internal combustion engine	(4) Method 7E of 40 CFR part 60, appendix A, Method 320 of 40 CFR part 63,	(d) NO_Xconcentration must be at 15 percent O_2, dry basis. Results of this test consist of the average of the

			appendix A, or ASTM D 6348–03 (incorporated by reference, see §60.17)	three 1-hour or longer runs.
	c. Reduce PM emissions by 60 percent or more	i. Select the sampling port location and the number of traverse points;	(1) Method 1 or 1A of 40 CFR part 60, appendix A	(a) Sampling sites must be located at the inlet and outlet of the control device.
		ii. Measure O_2at the inlet and outlet of the control device;	(2) Method 3, 3A, or 3B of 40 CFR part 60, appendix A	(b) Measurements to determine O_2concentration must be made at the same time as the measurements for PM concentration.
		iii. If necessary, measure moisture content at the inlet and outlet of the control device; and	(3) Method 4 of 40 CFR part 60, appendix A	(c) Measurements to determine and moisture content must be made at the same time as the measurements for PM concentration.
		iv. Measure PM at the inlet and outlet of the control device	(4) Method 5 of 40 CFR part 60, appendix A	(d) PM concentration must be at 15 percent O_2, dry basis. Results of this test consist of the average of the three 1-hour or longer runs.
	d. Limit the concentration of PM in the stationary CI internal combustion engine exhaust	i. Select the sampling port location and the number of traverse points;	(1) Method 1 or 1A of 40 CFR part 60, appendix A	(a) If using a control device, the sampling site must be located at the outlet of the control device.
		ii. Determine the O_2concentration of the stationary internal combustion engine exhaust at	(2) Method 3, 3A, or 3B of 40 CFR part 60, appendix A	(b) Measurements to determine O_2concentration must be made at the same time as the

		the sampling port location; and		measurements for PM concentration.
		iii. If necessary, measure moisture content of the stationary internal combustion engine exhaust at the sampling port location; and	(3) Method 4 of 40 CFR part 60, appendix A	(c) Measurements to determine moisture content must be made at the same time as the measurements for PM concentration.
		iv. Measure PM at the exhaust of the stationary internal combustion engine	(4) Method 5 of 40 CFR part 60, appendix A	(d) PM concentration must be at 15 percent O_2, dry basis. Results of this test consist of the average of the three 1-hour or longer runs.

Table 8 to Subpart IIII of Part 60—Applicability of General Provisions to Subpart IIII

[As stated in §60.4218, you must comply with the following applicable General Provisions:]

General Provisions citation	Subject of citation	Applies to subpart	Explanation
§60.1	General applicability of the General Provisions	Yes	
§60.2	Definitions	Yes	Additional terms defined in §60.4219.
§60.3	Units and abbreviations	Yes	
§60.4	Address	Yes	
§60.5	Determination of construction or modification	Yes	
§60.6	Review of plans	Yes	
§60.7	Notification and Recordkeeping	Yes	Except that §60.7 only applies as specified in §60.4214(a).
§60.8	Performance tests	Yes	Except that §60.8 only applies to stationary CI ICE with a displacement of (≥30 liters per

			cylinder and engines that are not certified.
§60.9	Availability of information	Yes	
§60.10	State Authority	Yes	
§60.11	Compliance with standards and maintenance requirements	No	Requirements are specified in subpart IIII.
§60.12	Circumvention	Yes	
§60.13	Monitoring requirements	Yes	Except that §60.13 only applies to stationary CI ICE with a displacement of (≥30 liters per cylinder.
§60.14	Modification	Yes	
§60.15	Reconstruction	Yes	
§60.16	Priority list	Yes	
§60.17	Incorporations by reference	Yes	
§60.18	General control device requirements	No	
§60.19	General notification and reporting requirements	Yes	

Browse Previous | ***Browse Next***

Attachment C – Applicable Portions of the National Emission Standards for Pharmaceuticals Production [40 CFR Part 63, Subpart GGG] [326 IAC 20]

Source Background and Description

Source Name:	Eli Lilly and Company, Lilly Technology Center
Source Location:	1555 South Harding Street, Indianapolis, IN 46168
County:	Marion
SIC Code:	2833, 2834
Permit Renewal No.:	T097-30149-00072
Permit Reviewer:	Josiah Balogun

The following is believed to be the correct text of the sections cited. However, in the event there is any discrepancy between this material and that of these regulatory sections as they appear in the Code of Federal Regulations, July 1, 2011 edition (the CFR), as adopted by reference by IDEM at 326 IAC 1-1-3, the language of the CFR shall govern.

Section E.3 of the permit identifies the applicable sections of this rule

Subpart GGG—National Emission Standards for Pharmaceuticals Production

Source: 63 FR 50326, Sept. 21, 1998, unless otherwise noted.

§ 63.1250 Applicability.

(a) *Definition of affected source.* (1) The affected source subject to this subpart consists of the pharmaceutical manufacturing operations as defined in §63.1251. Except as specified in paragraph (d) of this section, the provisions of this subpart apply to pharmaceutical manufacturing operations that meet the criteria specified in paragraphs (a)(1)(i) through (iii) of this section:

(i) Manufacture a pharmaceutical product as defined in §63.1251;

(ii) Are located at a plant site that is a major source as defined in section 112(a) of the Act; and

(iii) Process, use, or produce HAP.

(2) Determination of the applicability of this subpart shall be reported as part of an operating permit application or as otherwise specified by the permitting authority.

(b) *New source applicability.* A new affected source subject to this subpart and to which the requirements for new sources apply is: An affected source for which construction or reconstruction commenced after April 2, 1997, and the standard was applicable at the time of construction or reconstruction; or a pharmaceutical manufacturing process unit (PMPU) dedicated to manufacturing a single product that has the potential to emit 10 tons per year of any one HAP or 25 tons per year of combined HAP for which construction commenced after April 2, 1997 or reconstruction commenced after October 21, 1999.

(c) *General provisions.* Table 1 of this subpart specifies and clarifies the provisions of subpart A of this part that apply to an owner or operator of an affected source subject to this subpart. The provisions of subpart A specified in Table 1 are the only provisions of subpart A that apply to an affected source subject to this subpart.

(d) *Processes exempted from the affected source.* The provisions of this subpart do not apply to research and development facilities.

(e) *Storage tank ownership determination.* The owner or operator shall follow the procedures specified in paragraphs (e)(1) through (5) of this section to determine to which PMPU a storage tank shall belong. If an owner or operator produces only pharmaceutical products, the procedures specified in paragraphs (e)(1) through (5) of this section are required only to determine applicability and demonstrate compliance with the pollution-prevention alternative specified in §63.1252(e), or to determine new source applicability for a PMPU dedicated to manufacturing a single product as specified in paragraph (b) of this section.

(1) If a storage tank is dedicated to a single PMPU, the storage tank shall belong to that PMPU.

(2) If a storage tank is shared among process units (including at least one PMPU), then the storage tank shall belong to the process unit located on the same plant site as the storage tank that has the greatest annual volume input into or output from the storage tank (i.e., said PMPU or process unit has the predominant use of the storage tank).

(3) If predominant use cannot be determined for a storage tank that is shared among process units (including at least one PMPU), then the owner or operator shall assign the storage tank to any one of the PMPU's that shares it and is also subject to this subpart.

(4) If the predominant use of a storage tank varies from year to year, then predominant use shall be determined based on the utilization that occurred during the year preceding September 21, 1998 for existing affected sources. For new affected sources, predominant use will be based on the first year after initial startup. The determination of predominant use shall be reported in the Notification of Compliance Status required by §63.1260(f). If the predominant use changes, the redetermination of predominant use shall be reported in the next Periodic report.

(5) If the storage tank begins receiving material from (or sending material to) another PMPU, or ceases to receive material from (or send material to) a PMPU, or if the applicability of this subpart to a storage tank has been determined according to the provisions of paragraphs (e)(1) through (4) of this section and there is a significant change in the use of the storage tank that could reasonably change the predominant use, the owner or operator shall reevaluate the applicability of this subpart to the storage tank and report such changes to EPA in the next Periodic report.

(f) *Compliance dates.* The compliance dates for affected sources are as follows:

(1) An owner or operator of an existing affected source must comply with the provisions of this subpart no later than October 21, 2002.

(2) An owner or operator of a new or reconstructed affected source must comply with the provisions of this subpart on August 29, 2000 or upon startup, whichever is later.

(3) Notwithstanding the requirements of paragraph (f)(2) of this section, a new source which commences construction or reconstruction after April 2, 1997 and before September 21, 1998 shall not be required to comply with this subpart until September 21, 2001 if:

(i) The requirements of this subpart are more stringent than the requirements of this subpart in effect before August 29, 2000 and contained in the 40 CFR, part (63.1200–end), edition revised as of July 1, 2000; and

(ii) The owner or operator complies with the requirements published on April 2, 1997 (62 FR 15754) during the period until September 21, 2001.

(4) Notwithstanding the requirements of paragraph (f)(2) of this section, a new source which commences construction or reconstruction after September 21, 1998 and before April 10, 2000 shall not be required to comply with this subpart until October 21, 2002 if:

(i) The requirements of this subpart are more stringent than the requirements of this subpart in effect before August 29, 2000; and

(ii) The owner or operator complies with the requirements of this subpart in effect before August 29, 2000 during the period between startup and October 21, 2002.

(5) Notwithstanding the requirements of paragraph (f)(2) of this section, a new source which commences construction or reconstruction after April 10, 2000 and before August 29, 2000 shall not be required to comply with this subpart until August 29, 2001 if:

(i) The requirements of this subpart are more stringent than the requirements published on April 10, 2000 (65 FR 19152); and

(ii) The owner or operator complies with the requirements of this subpart in effect before August 29, 2000 during the period between startup and August 29, 2001.

(6) Pursuant to section 112(i)(3)(B) of the Act, an owner or operator may request an extension allowing the existing source up to 1 additional year to comply with section 112(d) standards.

(i) For purposes of this subpart, a request for an extension shall be submitted no later than 120 days prior to the compliance dates specified in paragraphs (f) (1) through (5) of this section, except as provided in paragraph (f)(6)(ii) of this section. The dates specified in §63.6(i) for submittal of requests for extensions shall not apply to sources subject to this subpart.

(ii) An owner or operator may submit a compliance extension request after the date specified in paragraph (f)(6)(i) of this section provided the need for the compliance extension arose after that date and before the otherwise applicable compliance date, and the need arose due to circumstances beyond reasonable control of the owner or operator. This request shall include the data described in §63.6(i)(6)(i) (A), (B), (C), and (D).

(g) *Applicability of this subpart except during periods of startup, shutdown, and malfunction.* (1) Each provision set forth in this subpart shall apply at all times except that emission limitations shall not apply during periods of: startup; shutdown; and malfunction, if the startup, shutdown, and malfunction precludes the ability of a particular emission point of an affected source to comply with one or more specific emission limitations to which it is subject and the owner or operator follows the provisions for periods of startup, shutdown, and malfunction, as specified in §§63.1259(a)(3) and 63.1260(i). Startup, shutdown, and malfunction are defined in §63.1251.

(2) The provisions set forth in §63.1255 of this subpart shall apply at all times except during periods of nonoperation of the PMPU (or specific portion thereof) in which the lines are drained and depressurized resulting in the cessation of the emissions to which §63.1255 of this subpart applies.

(3) The owner or operator shall not shut down items of equipment that are required or utilized for compliance with the emissions limitations of this subpart during times when emissions (or, where applicable, wastewater streams or residuals) are being routed to such items of equipment, if the shutdown would contravene emissions limitations of this subpart applicable to such items of equipment. This paragraph does not apply if the item of equipment is malfunctioning, or if the owner or operator must shut down the equipment to avoid damage due to a malfunction of the PMPU or portion thereof.

(4) During startups, shutdowns, and malfunctions when the emissions limitations of this subpart do not apply pursuant to paragraphs (g)(1) through (3) of this section, the owner or operator shall implement, to the extent reasonably available, measures to prevent or minimize excess emissions to the extent practical. For purposes of this paragraph, “excess emissions” means emissions in excess of those that would have occurred if there were no startup, shutdown, or malfunction and the owner or operator complied with the relevant provisions of this subpart. The measures to be taken shall be identified in the applicable startup, shutdown, and malfunction plan, and may include, but are not limited to, air pollution control technologies, work practices, pollution prevention, monitoring, and/or changes in the manner of operation of the source. Back-up control devices are not required, but may be used if available.

(h) *Consistency with other regulations* —(1) *Compliance with other MACT standards.* (i) After the compliance dates specified in this section, an affected source subject to the provisions of this subpart that is also subject to the provisions of any other subpart of this part 63 may elect to comply with either the provisions of this subpart or the provisions of another applicable subpart governing the maintenance of records and reporting to EPA. The affected source shall identify in the Notification of Compliance Status report required by §63.1260(f) under which authority such records will be maintained.

(ii) After the compliance dates specified in paragraph (f) of this section, at an offsite reloading or cleaning facility subject to §63.1253(f), compliance with the emission standards and associated initial compliance, monitoring, recordkeeping, and reporting provisions of any other subpart of this part 63 constitutes compliance with the provisions of §63.1253(f)(7) (ii) or (iii). The owner or operator of the affected storage tank shall identify in the Notification of Compliance Status report required by §63.1260(f) the subpart of this part 63 with which the owner or operator of the offsite reloading or cleaning facility complies.

(2) *Consistency with 40 CFR parts 264 and 265, subparts AA, BB, and/or CC.* (i) After the compliance dates specified in this section, if any control device subject to this subpart is also subject to monitoring, recordkeeping, and reporting requirements in 40 CFR part 264, subpart AA, BB, or CC, or is subject to monitoring and recordkeeping requirements in 40 CFR part 265, subpart AA, BB, or CC, and the owner or operator complies with the periodic reporting requirements under 40 CFR part 264, subpart AA, BB, or CC that would apply to the device if the facility had final-permitted status, the owner or operator may elect to comply either with the monitoring, recordkeeping, and reporting requirements of this subpart, or with the monitoring, recordkeeping, and reporting requirements in 40 CFR parts 264 and/or 265, as described in this paragraph, which shall constitute compliance with the monitoring, recordkeeping, and reporting requirements of this subpart. If the owner or operator elects to comply with the monitoring, recordkeeping, and reporting requirements in 40 CFR parts 264 and/or 265, the owner or operator shall report all information required by §63.1260(g) and (i). The owner or operator shall identify in the Notification of Compliance Status, required by §63.1260(f), the monitoring, recordkeeping, and reporting authority under which the owner or operator will comply.

(ii) After the compliance dates specified in this section, if any equipment at an affected source that is subject to §63.1255, is also subject to 40 CFR part 264, subpart BB, or to 40 CFR part 265, subpart BB, then compliance with the recordkeeping and reporting requirements of 40 CFR parts 264 and/or 265 may be used to comply with the recordkeeping and reporting requirements of §63.1255, to the extent that the requirements of 40 CFR parts 264 and/or 265 duplicate the requirements of §63.1255. The owner or operator shall identify in the Notification of Compliance Status, required by §63.1260(f), if the owner or operator will comply with the recordkeeping and reporting authority under 40 CFR parts 264 and/or 265.

(3) *Compliance with 40 CFR 60.112(b).* After the compliance dates specified in this section, a storage tank controlled with a floating roof and in compliance with the provisions of 40 CFR 60.112b, subpart Kb, constitutes compliance with the provisions of this subpart GGG. A storage tank with a fixed roof, closed vent system, and control device in compliance with the provisions of 40 CFR 60.112b, subpart Kb must comply with the monitoring, recordkeeping, and reporting provisions of this subpart GGG. The owner or operator shall identify in the Notification of Compliance Status report required by §63.1260(f) which tanks are in compliance with subpart Kb.

(4) *Compliance with subpart I of this part.* After the compliance dates specified in this section, an affected source with equipment subject to subpart I of this part may elect to comply with either the provisions of §63.1255 or the provisions of subpart H of this part for all such equipment. The owner or operator shall identify in the Notification of Compliance Status report required by §63.1260(f) the provisions with which the owner elects to comply.

(5) *Compliance with other regulations for wastewater.* After the compliance dates specified in this section, the owner or operator of an affected wastewater stream that is also subject to provisions in 40 CFR parts 260 through 272 may elect to determine whether this subpart or 40 CFR parts 260 through 272 contain the more stringent control requirements (e.g., design, operation, and inspection requirements for waste management units; numerical treatment standards; etc.) and the more stringent testing, monitoring, recordkeeping, and reporting. Compliance with provisions of 40 CFR parts 260 through 272 that are determined to be more stringent than the requirements of this subpart constitutes compliance with this subpart. For example, provisions of 40 CFR parts 260 through 272 for treatment units that meet the conditions specified in §63.1256(g)(13) constitute compliance with this subpart. In the Notification of Compliance Status report required by §63.1260(f), the owner or operator shall identify the more stringent provisions of 40 CFR parts 260 through 272 with which the owner or operator will comply. The owner or operator shall also identify in the Notification of Compliance Status report required by §63.1260(f) the information and procedures used to make any stringency determinations. If the owner or operator does not elect to determine the more stringent requirements, the owner or operator must comply with both the provisions of 40 CFR parts 260 through 272 and the provisions of this subpart.

(6) *Compliance with subpart PPP of this part.* After the compliance dates specified in this section, an affected source with equipment in a pharmaceutical manufacturing process unit that is also part of an affected source under subpart PPP of this part may elect to demonstrate compliance with §63.1254 by controlling all process vents in accordance with §63.1425 (b), (c)(1), (c)(3), (d), and/or (f). Alternatively, the owner or operator may elect to determine which process vents must be controlled to comply with the percent reduction requirements of §63.1254 and control only

those vents in accordance with §63.1425 (b), (c)(1), (c)(3), (d), and/or (f). For any pharmaceutical manufacturing process unit controlled in accordance with the requirements of §63.1425, the owner or operator must also comply with all other requirements in subpart PPP of this part. In the Notification of Compliance Status report required by §63.1260(f), the owner or operator shall identify which pharmaceutical manufacturing process units are meeting the control requirements for process vents and all other requirements of subpart PPP of this part, and the owner or operator shall describe the calculations and other information used to identify which process vents must be controlled to comply with the percent reduction requirements of §63.1254, if applicable.

(i) For the purposes of establishing whether a person is in violation of this subpart, nothing in this subpart shall preclude the use of any credible evidence or information relevant to whether a source would have been in compliance with applicable requirements.

[63 FR 50326, Sept. 21, 1998, as amended at 65 FR 52596, Aug. 29, 2000; 66 FR 40131, Aug. 2, 2001]

§ 63.1251 Definitions.

Terms used in this subpart are defined in the Act, in subpart A of this part, or in this section. If the same term is defined in subpart A of this part and in this section, it shall have the meaning given in this section for the purposes of this subpart.

Active ingredient means any material that is intended to furnish pharmacological activity or other direct effect in the diagnosis, cure, mitigation, treatment, or prevention of disease, or to affect the structure or any function of the body of man or other animals. This term does not include food, food additives (except vitamins and other materials described by SIC code 2833 or 2834), color additives, cosmetics, in-vitro diagnostic substances, x-ray film, test indicator devices, and medical devices such as implants, artificial joints, surgical bandages, and stitching material.

Actual HAP emissions means the HAP emitted to the atmosphere from either uncontrolled or controlled emission points.

Air pollution control device or Control device means equipment installed on a process vent, storage tank, wastewater treatment exhaust stack, or combination thereof that reduces the mass of HAP emitted to the air. The equipment may consist of an individual device or a series of devices. Examples include, but are not limited to, incinerators, carbon adsorption units, condensers, flares, boilers, process heaters, and gas absorbers. Process condensers are not considered air pollution control devices or control devices.

Annual average concentration, as used in the wastewater provisions in §63.1256, means the total mass of partially soluble and/or soluble HAP compounds in a wastewater stream during the calendar year divided by the total mass of the wastewater stream discharged during the same calendar year, as determined according to the procedures specified in §63.1257(e)(1) (i) and (ii).

Automated monitoring and recording system means any means of measuring values of monitored parameters and creating a hard copy or computer record of the measured values that does not require manual reading of monitoring instruments and manual transcription of data values. Automated monitoring and recording systems include, but are not limited to, computerized systems and strip charts.

Batch emission episode means a discrete venting episode that may be associated with a single unit operation. A unit operation may have more than one batch emission episode. For example, a displacement of vapor resulting from the charging of a vessel with HAP will result in a discrete emission episode that will last through the duration of the charge and will have an average flowrate equal to the rate of the charge. If the vessel is then heated, there will also be another discrete emission episode resulting from the expulsion of expanded vapor. Both emission episodes may occur in the same vessel or unit operation. There are possibly other emission episodes that may occur from the vessel or other process equipment, depending on process operations.

Batch operation or Batch process means a noncontinuous operation involving intermittent or discontinuous feed into equipment, and, in general, involves the emptying of the equipment after the batch operation ceases and prior to beginning a new operation. Addition of raw material and withdrawal of product do not occur simultaneously in a batch operation.

Bench-scale batch process means a batch process (other than a research and development facility) that is capable of being located on a laboratory bench top. This bench-scale equipment will typically include reagent feed vessels, a small reactor and associated product separator, recovery and holding equipment. These processes are only capable of producing small quantities of product.

Block means a time period that comprises a single batch.

Boiler means any enclosed combustion device that extracts useful energy in the form of steam and is not an incinerator. Boiler also means any industrial furnace as defined in 40 CFR 260.10.

Centralized combustion control device (CCCD) means enclosed combustion devices that are used to control process vent emissions from non-dedicated PMPU's at a facility. Centralized combustion control devices may also be used to control emissions from source types including, but not limited to, storage tanks, waste management units, and equipment leaks.

Cleaning operation means routine rinsing, washing, or boil-off of equipment in batch operations between batches.

Closed biological treatment process means a tank or surface impoundment where biological treatment occurs and air emissions from the treatment process are routed to either a control device by means of a closed-vent system or by means of hard-piping. The tank or surface impoundment has a fixed roof, as defined in this section, or a floating flexible membrane cover that meets the requirements specified in §63.1256(c).

Closed-loop system means an enclosed system that returns process fluid to the process and is not vented to the atmosphere except through a closed-vent system.

Closed-purge system means a system or combination of system and portable containers, to capture purged liquids. Containers must be covered or closed when not being filled or emptied.

Closed-vent system means a system that is not open to the atmosphere and is composed of piping, ductwork, connections, and, if necessary, flow inducing devices that transport gas or vapor from an emission point to a control device.

Combustion device means an individual unit of equipment, such as a flare, incinerator, process heater, or boiler, used for the combustion of HAP vapors.

Combustion device burner means a device designed to mix and ignite fuel and air to provide a flame to heat and oxidize waste organic vapors in a combustion device.

Connector means flanged, screwed, or other joined fittings used to connect two pipe lines or a pipe line and a piece of equipment. A common connector is a flange. Joined fittings welded completely around the circumference of the interface are not considered connectors for the purpose of this regulation. For the purpose of reporting and recordkeeping, connector means joined fittings that are not inaccessible, ceramic, or ceramic-lined as described in §63.1255(b)(1)(vii) and §63.1255(f)(3).

Construction means the onsite fabrication, erection, or installation of an affected source or a PMPU. Addition of new equipment to a PMPU subject to existing source standards does not constitute construction, but it may constitute reconstruction of the affected source or PMPU if it satisfies the definition of reconstruction in this section.

Consumption means the quantity of all HAP raw materials entering a process in excess of the theoretical amount used as reactant, assuming 100 percent stoichiometric conversion. The raw materials include reactants, solvents, and any other additives. If a HAP is generated in the process as well as added as a raw material, consumption includes the quantity generated in the process.

Container, as used in the wastewater provisions, means any portable waste management unit that has a capacity greater than or equal to 0.1 m^3 in which a material is stored, transported, treated, or otherwise handled. Examples of containers are drums, barrels, tank trucks, barges, dumpsters, tank cars, dump trucks, and ships.

Continuous process means a process where the inputs and outputs flow continuously throughout the duration of the process. Continuous processes are typically steady state.

Continuous recorder means a data recording device that either records an instantaneous data value at least once every 15 minutes or records 15-minute or more frequent block average values.

Continuous seal means a seal that forms a continuous closure that completely covers the space between the wall of the storage tank and the edge of the floating roof. A continuous seal may be a vapor-mounted, liquid-mounted, or metallic shoe seal.

Control device, for purposes of this §63.1255, means any equipment used for recovering or oxidizing organic hazardous air pollutant vapors. Such equipment includes, but is not limited to, absorbers, carbon adsorbers, condensers, flares, boilers, and process heaters.

Controlled HAP emissions means the quantity of HAP discharged to the atmosphere from an air pollution control device.

Cover, as used in the wastewater provisions, means a device or system which is placed on or over a waste management unit containing wastewater or residuals so that the entire surface area is enclosed to minimize air emissions. A cover may have openings necessary for operation, inspection, and maintenance of the waste management unit such as access hatches, sampling ports, and gauge wells provided that each opening is closed when not in use. Examples of covers include a fixed roof installed on a wastewater tank, a lid installed on a container, and an air-supported enclosure installed over a waste management unit.

Dedicated PMPU means a PMPU that is composed of equipment that is used to manufacture the same product for a continuous period of 6 months or greater. The PMPU includes any shared storage tank(s) that are determined to belong to the PMPU according to the procedures in §63.1250(e).

Dense gas system means a conveyance system operated to limit oxygen levels below 12 percent.

Double block and bleed system means two block valves connected in series with a bleed valve or line that can vent the line between the two block valves.

Duct work means a conveyance system such as those commonly used for heating and ventilation systems. It is often made of sheet metal and often has sections connected by screws or crimping. Hard-piping is not ductwork.

Enhanced biological treatment system or enhanced biological treatment process means an aerated, thoroughly mixed treatment unit(s) that contains biomass suspended in water followed by a clarifier that removes biomass from the treated water and recycles recovered biomass to the aeration unit. The mixed liquor volatile suspended solids (biomass) is greater than 1 kilogram per cubic meter throughout each aeration unit. The biomass is suspended and aerated in the water of the aeration unit(s) by either submerged air flow or mechanical agitation. A thoroughly mixed treatment unit is a unit that is designed and operated to approach or achieve uniform biomass distribution and organic compound concentration throughout the aeration unit by quickly dispersing the recycled biomass and the wastewater entering the unit.

Equipment, for purposes of §63.1255, means each pump, compressor, agitator, pressure relief device, sampling connection system, open-ended valve or line, valve, connector, and instrumentation system in organic hazardous air pollutant service; and any control devices or closed-vent systems required by this subpart.

Excipient means any substance other than the active drug or product which has been appropriately evaluated for safety and is included in a drug delivery system to either aid the processing of the drug delivery system during its manufacture; protect, support, or enhance stability, bioavailablity, or patient acceptability; assist in product identification; or enhance any other attribute of the overall safety and effectiveness of the drug delivery system during storage or use.

External floating roof means a pontoon-type or double-deck type cover that rests on the liquid surface in a storage tank or waste management unit with no fixed roof.

Fill or filling means the introduction of material into a storage tank or the introduction of a wastewater stream or residual into a waste management unit, but not necessarily to complete capacity.

First attempt at repair means to take action for the purpose of stopping or reducing leakage of organic material to the atmosphere.

Fixed roof means a cover that is mounted on a waste management unit or storage tank in a stationary manner and that does not move with fluctuations in liquid level.

Floating roof means a cover consisting of a double deck, pontoon single deck, internal floating cover or covered floating roof, which rests upon and is supported by the liquid being contained, and is equipped with a closure seal or seals to close the space between the roof edge and waste management unit or storage tank wall.

Flow indicator means a device which indicates whether gas flow is, or whether the valve position would allow gas flow to be, present in a line.

Formulation means the process of mixing, blending, or diluting one or more active or inert ingredients with one or more active or inert ingredients, without an intended chemical reaction, to obtain a pharmaceutical dosage form. Formulation operations include mixing, compounding, blending, and tablet coating.

Group of processes means all of the equipment associated with processes in a building, processing area, or facility-wide. For a dedicated process, a group of processes may consist of a single process.

Halogen atoms mean atoms of chlorine or fluorine.

Halogenated compounds means organic HAP compounds that contain halogen atoms.

Halogenated vent stream or Halogenated stream means a process, storage tank, or waste management unit vent determined to have a concentration of halogenated compounds of greater than 20 ppmv, as determined through process knowledge, test results using Method 18 of 40 CFR part 60, appendix A, or test results using any other test method that has been validated according to the procedures in Method 301 of appendix A of this part.

Hard-piping means piping or tubing that is manufactured and properly installed using good engineering judgment and standards, such as ANSI B31–3.

Hydrogen halides and halogens means hydrogen chloride (HCl), chlorine (Cl^2), and hydrogen fluoride (HF).

In gas/vapor service means that a piece of equipment in organic hazardous air pollutant service contains a gas or vapor at operating conditions.

In heavy liquid service means that a piece of equipment in organic hazardous air pollutant service is not in gas/vapor service or in light liquid service.

In light liquid service means that a piece of equipment in organic hazardous air pollutant service contains a liquid that meets the following conditions:

(1) The vapor pressure of one or more of the organic compounds is greater than 0.3 kilopascals at 20 °C;

(2) The total concentration of the pure organic compounds constituents having a vapor pressure greater than 0.3 kilopascals at 20 °C is equal to or greater than 20 percent by weight of the total process stream; and

(3) The fluid is a liquid at operating conditions. (Note: Vapor pressures may be determined by the methods described in 40 CFR 60.485(e)(1).)

In liquid service means that a piece of equipment in organic hazardous air pollutant service is not in gas/vapor service.

In organic hazardous air pollutant or in organic HAP service means that a piece of equipment either contains or contacts a fluid (liquid or gas) that is at least 5 percent by weight of total organic HAP's as determined according to the provisions of §63.180(d). The provisions of §63.180(d) also specify how to determine that a piece of equipment is not in organic HAP service.

In vacuum service means that equipment is operating at an internal pressure which is at least 5 kilopascals below ambient pressure.

In-situ sampling systems means nonextractive samplers or in-line samplers.

Individual drain system means the stationary system used to convey wastewater streams or residuals to a waste management unit. The term includes hard piping; all process drains and junction boxes; and associated sewer lines, other junction boxes, manholes, sumps, and lift stations conveying wastewater streams or residuals. A segregated stormwater sewer system, which is a drain and collection system designed and operated for the sole purpose of collecting rainfall-runoff at a facility, and which is segregated from all other individual drain systems, is excluded from this definition.

Initial startup means the first time a new or reconstructed source begins production. Initial startup does not include operation solely for testing equipment. Initial startup does not include subsequent start ups (as defined in this section) of processes following malfunctions or process shutdowns.

Internal floating roof means a cover that rests or floats on the liquid surface (but not necessarily in complete contact with it) inside a storage tank or waste management unit that has a permanently affixed roof.

Instrumentation system means a group of equipment components used to condition and convey a sample of the process fluid to analyzers and instruments for the purpose of determining process operating conditions (e.g., composition, pressure, flow, etc.). Valves and connectors are the predominant type of equipment used in instrumentation systems; however, other types of equipment may also be included in these systems. Only valves nominally 0.5 inches and smaller, and connectors nominally 0.75 inches and smaller in diameter are considered instrumentation systems for the purposes of this subpart. Valves greater than nominally 0.5 inches and connectors greater than nominally 0.75 inches associated with instrumentation systems are not considered part of instrumentation systems and must be monitored individually.

Isolated intermediate means a product of a process. An isolated intermediate is usually a product of a chemical synthesis, fermentation, or biological extraction process; several different isolated intermediates may be produced in the manufacture of a finished dosage form of a drug. Precursors, active ingredients, or finished dosage forms are considered isolated intermediates. An isolated intermediate is stored before subsequent processing. Storage occurs at any time the intermediate is placed in equipment used solely for storage, such as drums, totes, day tanks, and storage tanks. The storage of an isolated intermediate marks the end of a process.

Junction box means a manhole or access point to a wastewater sewer system line or a lift station.

Large control device means a control device that controls total HAP emissions of greater than or equal to 10 tons/yr, before control.

Liquid-mounted seal means a foam- or liquid-filled seal mounted in contact with the liquid between the wall of the storage tank or waste management unit and the floating roof. The seal is mounted continuously around the tank or unit.

Liquids dripping means any visible leakage from the seal including dripping, spraying, misting, clouding, and ice formation. Indications of liquid dripping include puddling or new stains that are indicative of an existing evaporated drip.

Maintenance wastewater means wastewater generated by the draining of process fluid from components in the pharmaceutical manufacturing process unit into an individual drain system in preparation for or during maintenance activities. Maintenance wastewater can be generated during planned and unplanned shutdowns and during periods not associated with a shutdown. Examples of activities that can generate maintenance wastewater include descaling of heat exchanger tubing bundles, cleaning of distillation column traps, draining of pumps into an individual drain

system, and draining of portions of the pharmaceutical manufacturing process unit for repair. Wastewater from cleaning operations is not considered maintenance wastewater.

Malfunction means any sudden, infrequent, and not reasonably preventable failure of air pollution control equipment, emissions monitoring equipment, process equipment, or a process to operate in a normal or usual manner which causes, or has the potential to cause, the emission limitations in an applicable standard to be exceeded. Failures that are caused all or in part by poor maintenance or careless operation are not malfunctions.

Maximum true vapor pressure means the equilibrium partial pressure exerted by the total organic HAP in the stored or transferred liquid at the temperature equal to the highest calendar-month average of the liquid storage or transferred temperature for liquids stored or transferred above or below the ambient temperature or at the local maximum monthly average temperature as reported by the National Weather Service for liquids stored or transferred at the ambient temperature, as determined:

(1) In accordance with methods described in Chapter 19.2 of the American Petroleum Institute's Manual of Petroleum Measurement Standards, Evaporative Loss From Floating-Roof Tanks (incorporated by reference as specified in §63.14); or

(2) As obtained from standard reference texts; or

(3) As determined by the American Society for Testing and Materials Method D2879–97, Test Method for Vapor Pressure-Temperature Relationship and Initial Decomposition Temperature of Liquids by Isoteniscope (incorporated by reference as specified in §63.14); or

(4) Any other method approved by the Administrator.

Metallic shoe seal or mechanical shoe seal means metal sheets that are held vertically against the wall of the storage tank by springs, weighted levers, or other mechanisms and connected to the floating roof by braces or other means. A flexible coated fabric (envelope) spans the annular space between the metal sheet and the floating roof.

Nondedicated formulation operations means equipment used to formulate numerous products.

Nondedicated recovery device(s) means a recovery device that receives material from more than one PMPU.

Nonrepairable means that it is technically infeasible to repair a piece of equipment from which a leak has been detected without a process shutdown.

Open biological treatment process means a biological treatment process that is not a closed biological treatment process as defined in this section.

Open-ended valve or line means any valve, except pressure relief valves, having one side of the valve seat in contact with process fluid and one side open to atmosphere, either directly or through open piping.

Operating scenario for the purposes of reporting and recordkeeping, means any specific operation of a PMPU and includes for each process:

(1) A description of the process and the type of process equipment used;

(2) An identification of related process vents and their associated emissions episodes and durations, wastewater PODs, and storage tanks;

(3) The applicable control requirements of this subpart, including the level of required control, and for vents, the level of control for each vent;

(4) The control or treatment devices used, as applicable, including a description of operating and/or testing conditions for any associated control device;

(5) The process vents, wastewater PODs, and storage tanks (including those from other processes) that are simultaneously routed to the control or treatment device(s);

(6) The applicable monitoring requirements of this subpart and any parametric level that assures compliance for all emissions routed to the control or treatment device;

(7) Calculations and engineering analyses required to demonstrate compliance; and

(8) For reporting purposes, a change to any of these elements not previously reported, except for paragraph (5) of this definition, shall constitute a new operating scenario.

Partially soluble HAP means a HAP listed in Table 2 of this subpart.

Pharmaceutical manufacturing operations means the facilitywide collection of PMPU and any other equipment such as heat exchanger systems, wastewater and waste management units, or cooling towers that are not associated with an individual PMPU, but that are located at a facility for the purpose of manufacturing pharmaceutical products and are under common control.

Pharmaceutical manufacturing process unit (PMPU) means the process, as defined in this subpart, and any associated storage tanks, equipment identified in §63.1252(f), and components such as pumps, compressors, agitators, pressure relief devices, sampling connection systems, open-ended valves or lines, valves, connectors, and instrumentation systems that are used in the manufacturing of a pharmaceutical product.

Pharmaceutical product means any of the following materials, excluding any material that is a nonreactive solvent, excipient, binder, or filler, or any material that is produced in a chemical manufacturing process unit that is subject to the requirements of subparts F and G of this part 63:

(1) Any material described by the standard industrial classification (SIC) code 2833 or 2834; or

(2) Any material whose manufacturing process is described by North American Industrial Classification System (NAICS) code 325411 or 325412; or

(3) A finished dosage form of a drug, for example, a tablet, capsule, solution, etc.; or

(4) Any active ingredient or precursor that is produced at a facility whose primary manufacturing operations are described by SIC code 2833 or 2834; or

(5) At a facility whose primary operations are not described by SIC code 2833 or 2834, any material whose primary use is as an active ingredient or precursor.

Plant site means all contiguous or adjoining property that is under common control, including properties that are separated only by a road or other public right-of-way. Common control includes properties that are owned, leased, or operated by the same entity, parent entity, subsidiary, or any combination thereof.

Point of determination (POD) means the point where a wastewater stream exits the process, storage tank, or last recovery device. If soluble and/or partially soluble HAP compounds are not recovered from water before discharge, the discharge point from the process equipment or storage tank is a POD. If water streams are routed to a recovery device, the discharge from the recovery device is a POD. There can be more than 1 POD per process or PMPU.

Precursor means a material that is manufactured to undergo further chemical change or processing to ultimately manufacture an active ingredient or finished dosage form of a drug. This term does not include commodity chemicals produced by the synthetic organic chemical manufacturing industry.

Pressure release means the emission of materials resulting from the system pressure being greater than the set pressure of the pressure relief device. This release can be one release or a series of releases over a short time period due to a malfunction in the process.

Pressure relief device or valve means a safety device used to prevent operating pressures from exceeding the maximum allowable working pressure of the process equipment. A common pressure relief device is a spring-loaded pressure relief valve. Devices that are actuated either by a pressure of less than or equal to 2.5 psig or by a vacuum are not pressure relief devices.

Primary use means 50 percent or more of a material is used for a particular purpose.

Process means all equipment which collectively function to produce a pharmaceutical product or isolated intermediate (which is also a pharmaceutical product). A process may consist of one or more unit operations. For the purposes of this subpart, process includes any, all, or a combination of reaction, recovery, separation, purification, or other activity, operation, manufacture, or treatment which are used to produce a pharmaceutical product or isolated intermediate. Cleaning operations conducted are considered part of the process. Nondedicated solvent recovery operations located within a contiguous area within the affected source are considered single processes. A storage tank that is used to accumulate used solvent from multiple batches of a single process for purposes of solvent recovery does not represent the end of the process. Nondedicated formulation operations occurring within a contiguous area are considered a single process that is used to formulate numerous materials and/or products. Quality assurance and quality control laboratories are not considered part of any process. Ancillary activities are not considered a process or part of any process. Ancillary activities include boilers and incinerators (not used to comply with the provisions of §63.1253, §63.1254, or §63.1256(h)), chillers and refrigeration systems, and other equipment and activities that are not directly involved (i.e., they operate within a closed system and materials are not combined with process fluids) in the processing of raw materials or the manufacturing of a pharmaceutical product.

Process condenser means a condenser whose primary purpose is to recover material as an integral part of a process. The condenser must support a vapor-to-liquid phase change for periods of source equipment operation that are at or above the boiling or bubble point of substance(s) at the liquid surface. Examples of process condensers include distillation condensers, reflux condensers, and condensers used in stripping or flashing operations. In a series of condensers, all condensers up to and including the first condenser with an exit gas temperature below the boiling or bubble point of the substance(s) at the liquid surface are considered to be process condensers. All condensers in line prior to a vacuum source are included in this definition.

Process shutdown means a work practice or operational procedure that stops production from a process or part of a process during which it is technically feasible to clear process material from a process or part of a process consistent with safety constraints and during which repairs can be effected. An unscheduled work practice or operational procedure that stops production from a process or part of a process for less than 24 hours is not a process shutdown. An unscheduled work practice or operational procedure that would stop production from a process or part of a process for a shorter period of time than would be required to clear the process or part of the process of materials and start up the process, and would result in greater emissions than delay of repair of leaking components until the next scheduled process shutdown, is not a process shutdown. The use of spare equipment and technically feasible bypassing of equipment without stopping production are not process shutdowns.

Process tank means a tank that is used to collect material discharged from a feedstock storage tank or unit operation and to transfer this material to another unit operation within the process or to a product storage tank. Surge control vessels and bottoms receivers that fit these conditions are considered process tanks. Product storage tanks are considered process tanks and are part of the PMPU that produce the stored material. For the purposes of this subpart, vents from process tanks are considered process vents.

Process vent means a vent from a unit operation or vents from multiple unit operations within a process that are manifolded together into a common header, through which a HAP-containing gas stream is, or has the potential to be, released to the atmosphere. Examples of process vents include, but are not limited to, vents on condensers used for product recovery, bottom receivers, surge control vessels, reactors, filters, centrifuges, and process tanks. Emission streams that are undiluted and uncontrolled containing less than 50 ppmv HAP, as determined through process knowledge that no HAP are present in the emission stream or using an engineering assessment as discussed in §63.1257(d)(2)(ii), test data using Methods 18 of 40 CFR part 60, appendix A, or any other test method that has been validated according to the procedures in Method 301 of appendix A of this part, are not considered process vents. Process vents do not include vents on storage tanks regulated under §63.1253, vents on wastewater emission sources regulated under §63.1256, or pieces of equipment regulated under §63.1255.

Production-indexed HAP consumption factor is the result of dividing the annual consumption of total HAP by the annual production rate, per process.

Production-indexed volatile organic compound (VOC) consumption factor is the result of dividing the annual consumption of total VOC by the annual production rate, per process.

Publicly owned treatment works (POTW) means any devices and systems used in the storage, treatment, recycling, and reclamation of municipal sewage or industrial wastes of a liquid nature as defined in section 212(2)(A) of the Clean Water Act, as amended [33 U.S.C. §1292(2)(A)]. A POTW includes the treatment works, intercepting sewers, outfall sewers, sewage collection systems, pumping, power, and other equipment. The POTW is defined at 40 CFR 403.3(o).

Reactor means a device or vessel in which one or more chemicals or reactants, other than air, are combined or decomposed in such a way that their molecular structures are altered and one or more new organic compounds are formed.

Reconstruction, as used in §63.1250(b), shall have the meaning given in §63.2, except that "affected or previously unaffected stationary source" shall mean either "affected facility" or "PMPU." As used in §63.1254(a)(3)(ii)(A)(*3*), reconstruction shall have the meaning given in §63.2, except that "source" shall mean "control device."

Recovery device, as used in the wastewater provisions, means an individual unit of equipment used for the purpose of recovering chemicals for fuel value (i.e., net positive heating value), use, reuse, or for sale for fuel value, use or reuse. Examples of equipment that may be recovery devices include organic removal devices such as decanters, strippers, or thin-film evaporation units. To be a recovery device, a decanter and any other equipment based on the operating principle of gravity separation must receive only two-phase liquid streams.

Repaired means that equipment:

(1) Is adjusted, or otherwise altered, to eliminate a leak as defined in the applicable paragraphs of §63.1255, and;

(2) Is, unless otherwise specified in applicable provisions of §63.1255, monitored as specified in §63.180(b) and (c) as appropriate, to verify that emissions from the equipment are below the applicable leak definition.

Research and development facility means any stationary source whose primary purpose is to conduct research and development into new processes and products, where such source is operated under the close supervision of technically trained personnel, and is not engaged in the manufacture of products for commercial sale in commerce, except in a de minimis manner.

Residual means any HAP-containing liquid or solid material that is removed from a wastewater stream by a waste management unit or treatment process that does not destroy organics (nondestructive unit). Examples of residuals from nondestructive waste management units are: the organic layer and bottom residue removed by a decanter or organic-water separator and the overheads from a steam stripper or air stripper. Examples of materials which are not residuals are: silt; mud; leaves; bottoms from a steam stripper or air stripper; and sludges, ash, or other materials removed from wastewater being treated by destructive devices such as biological treatment units and incinerators.

Safety device means a closure device such as a pressure relief valve, frangible disc, fusible plug, or any other type of device which functions exclusively to prevent physical damage or permanent deformation to a unit or its air emission control equipment by venting gases or vapors directly to the atmosphere during unsafe conditions resulting from an unplanned, accidental, or emergency event. For the purposes of this subpart, a safety device is not used for routine venting of gases or vapors from the vapor headspace underneath a cover such as during filling of the unit or to adjust the pressure in this vapor headspace in response to normal daily diurnal ambient temperature fluctuations. A safety device is designed to remain in a closed position during normal operations and open only when the internal pressure, or another relevant parameter, exceeds the device threshold setting applicable to the air emission control equipment as determined by the owner or operator based on manufacturer recommendations, applicable regulations, fire protection and prevention codes, standard engineering codes and practices, or other requirements for the safe handling of flammable, combustible, explosive, reactive, or hazardous materials.

Sampling connection system means an assembly of equipment within a process unit used during periods of representative operation to take samples of the process fluid. Equipment used to take nonroutine grab samples is not considered a sampling connection system.

Sensor means a device that measures a physical quantity or the change in a physical quantity, such as temperature, pressure, flow rate, pH, or liquid level.

Set pressure means the pressure at which a properly operating pressure relief device begins to open to relieve atypical process system operating pressure.

Sewer line means a lateral, trunk line, branch line, or other conduit including, but not limited to, grates, trenches, etc., used to convey wastewater streams or residuals to a downstream waste management unit.

Shutdown means the cessation of operation of a continuous process for any purpose. Shutdown also means the cessation of a batch process or any related individual piece of equipment required or used to comply with this subpart as a result of a malfunction or for replacement of equipment, repair, or any other purpose not excluded from this definition. Shutdown also applies to emptying and degassing storage vessels. Shutdown does not apply to cessation of a batch process at the end of a campaign, for routine maintenance, for rinsing or washing of equipment between batches, or other routine operations.

Single-seal system means a floating roof having one continuous seal that completely covers the space between the wall of the storage tank and the edge of the floating roof. This seal may be a vapor-mounted, liquid-mounted, or metallic shoe seal.

Small control device means a control device that controls total HAP emissions of less than 10 tons/yr, before control.

Soluble HAP means a HAP listed in Table 3 of this subpart.

Standard batch means a batch process operated within a range of operating conditions that are documented in an operating scenario. Emissions from a standard batch are based on the operating conditions that result in highest emissions. The standard batch defines the uncontrolled and controlled emissions for each emission episode defined under the operating scenario.

Startup means the setting in operation of a continuous process unit for any purpose; the first time a new or reconstructed batch process unit begins production; for new equipment added, including equipment used to comply with this subpart, the first time the equipment is put into operation; or, for the introduction of a new product/process, the first time the product or process is run in equipment. For batch process units, startup does not apply to the first time the equipment is put into operation at the start of a campaign to produce a product that has been produced in the past, after a shutdown for maintenance, or when the equipment is put into operation as part of a batch within a campaign. As used in §63.1255, startup means the setting in operation of a piece of equipment or a control device that is subject to this subpart.

Storage tank means a tank or other vessel that is used to store organic liquids that contain one or more HAP as raw material feedstocks. Storage tank also means a tank or other vessel in a tank farm that receives and accumulates used solvent from multiple batches of a process or processes for purposes of solvent recovery. The following are not considered storage tanks for the purposes of this subpart:

(1) Vessels permanently attached to motor vehicles such as trucks, railcars, barges, or ships;

(2) Pressure vessels designed to operate in excess of 204.9 kilopascals and without emissions to the atmosphere;

(3) Vessels storing organic liquids that contain HAP only as impurities;

(4) Wastewater storage tanks; and

(5) Process tanks (including product tanks and isolated intermediate tanks).

Supplemental gases are any gaseous streams that are not defined as process vents, or closed-vent systems from wastewater management and treatment units, storage tanks, or equipment components and that contain less than 50 ppmv TOC, as determined through process knowledge, that are introduced into vent streams or manifolds. Air required to operate combustion device burner(s) is not considered supplemental gas.

Surface impoundment means a waste management unit which is a natural topographic depression, manmade excavation, or diked area formed primarily of earthen materials (although it may be lined with manmade materials), which is designed to hold an accumulation of liquid wastes or waste containing free liquids. A surface impoundment is used for the purpose of treating, storing, or disposing of wastewater or residuals, and is not an injection well. Examples of surface impoundments are equalization, settling, and aeration pits, ponds, and lagoons.

System flowrate means the flowrate of gas entering the control device.

Total organic compounds (TOC) means those compounds measured according to the procedures of Method 18 or Method 25A, 40 CFR part 60, appendix A.

Treatment process means a specific technique that removes or destroys the organics in a wastewater or residual stream such as a steam stripping unit, thin-film evaporation unit, waste incinerator, biological treatment unit, or any other process applied to wastewater streams or residuals to comply with §63.1256. Most treatment processes are conducted in tanks. Treatment processes are a subset of waste management units.

Uncontrolled HAP emissions means a gas stream containing HAP which has exited the process (or process condenser, if any), but which has not yet been introduced into an air pollution control device to reduce the mass of HAP in the stream. If the process vent is not routed to an air pollution control device, uncontrolled emissions are those HAP emissions released to the atmosphere.

Unit operation means those processing steps that occur within distinct equipment that are used, among other things, to prepare reactants, facilitate reactions, separate and purify products, and recycle materials. Equipment used for these purposes includes but is not limited to reactors, distillation columns, extraction columns, absorbers, decanters, dryers, condensers, and filtration equipment.

Vapor-mounted seal means a continuous seal that completely covers the annular space between the wall of the storage tank or waste management unit and the edge of the floating roof and is mounted such that there is a vapor space between the stored liquid and the bottom of the seal.

Volatile organic compounds (VOC) means those materials defined in 40 CFR 51.100.

Waste management unit means the equipment, structure(s),and or devices used to convey, store, treat, or dispose of wastewater streams or residuals. Examples of waste management units include wastewater tanks, air flotation units, surface impoundments, containers, oil-water or organic-water separators, individual drain systems, biological wastewater treatment units, waste incinerators, and organic removal devices such as steam and air stripper units, and thin film evaporation units. If such equipment is used for recovery then it is part of a pharmaceutical process and is not a waste management unit.

Wastewater means any portion of an individual wastewater stream or any aggregation of wastewater streams.

Wastewater stream means water that is discarded from a PMPU through a single POD, that contains an annual average concentration of partially soluble and/or soluble HAP compounds of at least 5 parts per million by weight and a load of at least 0.05 kg/yr. The following are not considered wastewater streams for the purposes of this subpart:

(1) Stormwater from segregated sewers;

(2) Water from fire-fighting and deluge systems, including testing of such systems;

(3) Spills;

(4) Water from safety showers;

(5) Samples of a size not greater than reasonably necessary for the method of analysis that is used;

(6) Equipment leaks;

(7) Wastewater drips from procedures such as disconnecting hoses after clearing lines; and

(8) Noncontact cooling water.

Wastewater tank means a stationary waste management unit that is designed to contain an accumulation of wastewater or residuals and is constructed primarily of nonearthen materials (e.g., wood, concrete, steel, plastic) which provide structural support. Wastewater tanks used for flow equalization are included in this definition.

Water seal controls means a seal pot, p-leg trap, or other type of trap filled with water (e.g., flooded sewers that maintain water levels adequate to prevent air flow through the system) that creates a water barrier between the sewer line and the atmosphere. The water level of the seal must be maintained in the vertical leg of a drain in order to be considered a water seal.

[63 FR 50326, Sept. 21, 1998, as amended at 65 FR 52598, Aug. 29, 2000; 71 FR 20459, Apr. 20, 2006]

§ 63.1252 Standards: General.

Each owner or operator of any affected source subject to the provisions of this subpart shall control HAP emissions to the level specified in this section on and after the compliance dates specified in §63.1250(f). Initial compliance with the emission limits is demonstrated in accordance with the provisions of §63.1257, and continuous compliance is demonstrated in accordance with the provisions of §63.1258.

(a) *Opening of a safety device.* Opening of a safety device, as defined in §63.1251, is allowed at any time conditions require it to do so to avoid unsafe conditions.

(b) *Closed-vent systems.* The owner or operator of a closed-vent system that contains bypass lines that could divert a vent stream away from a control device used to comply with the requirements in §§63.1253, 63.1254, and 63.1256 shall comply with the requirements of Table 4 to this subpart and paragraph (b)(1) or (2) of this section. Equipment such as low leg drains, high point bleeds, analyzer vents, open-ended valves or lines, rupture disks and pressure relief valves needed for safety purposes are not subject to this paragraph.

(1) Install, calibrate, maintain, and operate a flow indicator that determines whether vent stream flow is present at least once every 15 minutes. Records shall be maintained as specified in §63.1259(i)(6)(i). The flow indicator shall be installed at the entrance to any bypass line that could divert the vent stream away from the control device to the atmosphere; or

(2) Secure the bypass line valve in the closed position with a car seal or lock and key type configuration. A visual inspection of the seal or closure mechanism shall be performed at least once every month to ensure that the valve is maintained in the closed position and the vent stream is not diverted through the bypass line. Records shall be maintained as specified in §63.1259(i)(6)(ii).

(c) *Heat exchange systems.* Except as provided in paragraph (c)(2) of this section, owners and operators of affected sources shall comply with the requirements in paragraph (c)(1) of this section for heat exchange systems that cool process equipment or materials used in pharmaceutical manufacturing operations.

(1) The heat exchange system shall be treated according to the provisions of §63.104, except that the monitoring frequency shall be no less than quarterly.

(2) For identifying leaking equipment, the owner or operator of heat exchange systems on equipment which meet current good manufacturing practice (CGMP) requirements of 21 CFR part 211 may elect to use the physical integrity of the reactor as the surrogate indicator of heat exchange system leaks around the reactor.

(d) *Emissions averaging provisions.* Except as specified in paragraphs (d)(1) through (5) of this section, owners or operators of storage tanks or processes subject to the provisions of §§63.1253 and 63.1254 may choose to comply by using emissions averaging requirements specified in §63.1257(g) or (h) for any storage tank or process.

(1) A State may prohibit averaging of HAP emissions and require the owner or operator of an existing source to comply with the provisions in §§63.1253 and 63.1254.

(2) Only emission sources subject to the requirements of §63.1253(b)(1) or (c)(1)(i) or §63.1254(a)(1)(i) may be included in any averaging group.

(3) Processes which have been permanently shutdown or storage tanks permanently taken out of HAP service may not be included in any averaging group.

(4) Processes and storage tanks already controlled on or before November 15, 1990 may not be included in an emissions averaging group, except where the level of control is increased after November 15, 1990. In these cases, the uncontrolled emissions shall be the controlled emissions as calculated on November 15, 1990 for the purpose of determining the uncontrolled emissions as specified in §63.1257(g) and (h).

(5) Emission points controlled to comply with a State or Federal rule other than this subpart may not be credited in an emission averaging group, unless the level of control has been increased after November 15, 1990 above what is required by the other State or Federal rule. Only the control above what is required by the other State or Federal rule will be credited. However, if an emission point has been used to generate emissions averaging credit in an approved emissions average, and the point is subsequently made subject to a State or Federal rule other than this subpart, the point can continue to generate emissions averaging credit for the purpose of complying with the previously approved average.

(6) Not more than 20 processes subject to §63.1254(a)(1)(i), and 20 storage tanks subject to §63.1253(b)(1) or (c)(1)(i) at an affected source may be included in an emissions averaging group.

(7) Compliance with the emission standards in §63.1253 shall be satisfied when the annual percent reduction efficiency is greater than or equal to 90 percent for those tanks meeting the criteria of §63.1253(a)(1) and 95 percent for those tanks meeting the criteria of §63.1253(a)(2), as demonstrated using the test methods and compliance procedures specified in §63.1257(g).

(8) Compliance with the emission standards in §63.1254(a)(1)(i) shall be satisfied when the annual percent reduction efficiency is greater than or equal to 93 percent, as demonstrated using the test methods and compliance procedures specified in §63.1257(h).

(e) *Pollution prevention alternative.* Except as provided in paragraph (e)(1) of this section, an owner or operator may choose to meet the pollution prevention alternative requirement specified in either paragraph (e)(2) or (3) of this section for any PMPU or for any situation described in paragraph (e)(4) of this section, in lieu of the requirements specified in §§63.1253, 63.1254, 63.1255, and 63.1256. Compliance with paragraphs (e)(2) and (3) of this section shall be demonstrated through the procedures in §63.1257(f). Any PMPU for which the owner or operator seeks to comply by using the pollution prevention alternative shall begin with the same starting material(s) and end with the same product(s). The owner or operator may not comply with the pollution prevention alternative by eliminating any steps of a process by transferring the step offsite (to another manufacturing location).

(1) The HAP that are generated in the PMPU that are not part of the production-indexed consumption factor must be controlled according to the requirements of §§63.1253, 63.1254, 63.1255, and 63.1256. The hydrogen halides that are generated as a result of combustion control of emissions must be controlled according to the requirements of paragraph (g)(1) of this section.

(2) The production-indexed HAP consumption factor (kg HAP consumed/kg produced) shall be reduced by at least 75 percent from a 3 year average baseline established no earlier than the 1987 calendar year, or for the time period from startup of the process until the present in which the PMPU was operational and data are available, whichever is the lesser time period. If a time period less than 3 years is used to set the baseline, the data must represent at least 1 year's worth of data. For any reduction in the HAP factor achieved by reducing a HAP that is also a VOC, an equivalent reduction in the VOC factor is also required. For any reduction in the HAP factor that is achieved by reducing a HAP that is not a VOC, the VOC factor may not be increased.

(3) Both requirements specified in paragraphs (e)(3)(i) and (ii) of this section are met.

(i) The production-indexed HAP consumption factor (kg HAP consumed/kg produced) shall be reduced by at least 50 percent from a 3-year average baseline established no earlier than the 1987 calendar year, or for the time period from startup of the process until the present in which the PMPU was operational and data are available, whichever is less. If a time period less than 3 years is used to set the baseline, the data must represent at least 1 year's worth of data. For any reduction in the HAP factor achieved by reducing a HAP that is also a VOC, an equivalent reduction in the VOC factor is also required. For any reduction in the HAP factor that is achieved by reducing a HAP that is not a VOC, the VOC factor may not be increased.

(ii) The total PMPU HAP emissions shall be reduced by an amount, in kg/yr, that, when divided by the annual production rate, in kg/yr, and added to the reduction of the production-indexed HAP consumption factor, in kg/kg, yields a value of at least 75 percent of the average baseline HAP production-indexed consumption factor established according to paragraph (e)(3)(i) of this section according to the equation provided in §63.1257(f)(2)(ii)(A). The total PMPU VOC emissions shall be reduced by an amount calculated according to the equation provided in §63.1257(f)(2)(ii)(B). The annual reduction in HAP and VOC air emissions must be due to the use of the following control devices:

(A) Combustion control devices such as incinerators, flares or process heaters.

(B) Control devices such as condensers and carbon adsorbers whose recovered product is destroyed or shipped offsite for destruction.

(C) Any control device that does not ultimately allow for recycling of material back to the PMPU.

(D) Any control device for which the owner or operator can demonstrate that the use of the device in controlling HAP emissions will have no effect on the production-indexed consumption factor for the PMPU.

(4) The owner or operator may comply with the requirements in either paragraph (e)(2) or (3) of this section for a series of processes, including situations where multiple processes are merged, subject to the following conditions:

(i) The baseline period shall be a single year beginning no earlier than the 1992 calendar year.

(ii) The term “PMPU” shall have the meaning provided in §63.1251 except that the baseline and modified PMPU may include multiple processes (i.e., precursors, active ingredients, and final dosage form) if the owner or operator demonstrates to the satisfaction of the Administrator that the multiple processes were merged after the baseline period into an existing process or processes.

(iii) Nondedicated formulation and solvent recovery processes may not be merged with any other processes.

(f) *Control requirements for certain liquid streams in open systems within a PMPU.* (1) The owner or operator shall comply with the provisions of Table 5 of this subpart, for each item of equipment meeting all the criteria specified in paragraphs (f)(2) through (4) and either paragraph (f)(5)(i) or (ii) of this section.

(2) The item of equipment is of a type identified in Table 5 of this subpart;

(3) The item of equipment is part of a PMPU, as defined in §63.1251;

(4) The item of equipment is controlled less stringently than in Table 5 of this subpart and the item of equipment is not otherwise exempt from controls by the provisions of this subpart or subpart A of this part; and

(5) The item of equipment:

(i) Is a drain, drain hub, manhole, lift station, trench, pipe, or oil/water separator that conveys water with an annual average concentration greater than or equal to 1,300 parts per million by weight (ppmw) of partially soluble HAP compounds; or an annual average concentration greater than or equal to 5,200 ppmw of partially soluble and/or soluble HAP compounds. The annual average concentration shall be determined according to the procedures in §63.1257(e)(1)(ii).

(ii) Is a tank that receives one or more streams that contain water with an annual average concentration greater than or equal to 1,300 ppmw of partially soluble HAP compounds, or greater than or equal to 5,200 ppmw of total partially soluble and/or soluble HAP compounds. The owner or operator of the source shall determine the average concentration of the stream at the inlet to the tank and according to the procedures in §63.1257(e)(1)(ii).

(g) *Control requirements for halogenated vent streams that are controlled by combustion devices.* If a combustion device is used to comply with the provisions of §§63.1253 (storage tanks), 63.1254 (process vents), 63.1256(h) (wastewater vent streams) for a halogenated vent stream, then the vent stream shall be ducted to a halogen reduction device such as, but not limited to, a scrubber, before it is discharged to the atmosphere. The halogen reduction device must reduce emissions by the amounts specified in either paragraph (g)(1) or (2) of this section.

(1) A halogen reduction device after the combustion control device must reduce overall emissions of hydrogen halides and halogens, as defined in §63.1251, by 95 percent or to a concentration less than or equal to 20 ppmv.

(2) A halogen reduction device located before the combustion control device must reduce the halogen atom content of the vent stream to a concentration less than or equal to 20 ppmv.

(h) *Planned routine maintenance for centralized combustion control devices.* The owner or operator may operate non-dedicated PMPU's during periods of planned routine maintenance for CCCD in accordance with the provisions specified in paragraphs (h)(1) through (6) of this section.

(1) For equipment leaks and wastewater emissions that normally are controlled by the CCCD, if any, the owner or operator must continue to comply with the requirements in §§63.1255(b)(4)(ii) and 63.1256(h), respectively, using other control devices during the planned routine maintenance period for the CCCD.

(2) During the planned routine maintenance period, the owner or operator must route emissions from process vents with organic HAP emissions greater than 15 pounds per day (lb/day) through a closed-vent system to a condenser that meets the conditions specified in paragraphs (h)(2)(i) through (iii) of this section.

(i) The outlet gas temperature must be less than −50 °C (−58 °F) when the emission stream contains organic HAP with a partial pressure greater than 20 kPa (2.9 psia).

(ii) The outlet gas temperature must be less than −5 °C (23 °F) when the emission stream contains organic HAP with a partial pressure less than or equal to 20 kPa (2.9 psia).

(iii) The HAP partial pressures in paragraphs (h)(2)(i) and (ii) of this section must be determined at 25 °C.

(3) The owner or operator must route HCl emissions from process vents with HCl emissions greater than 15 lb/day through a closed-vent system to a caustic scrubber, and the pH of the scrubber effluent must be maintained at or above 9.

(4) For the purposes of the emission calculations required in paragraphs (h)(2) and (3) of this section, the term “process vent” shall mean each vent from a unit operation. The emission calculation shall not be performed on the aggregated emission stream from multiple unit operations that are manifolded together into a common header. Once an affected process vent has been controlled in accordance with this section, it is no longer subject to the requirements of this section or §63.1254 during the routine maintenance period.

(5) The total period of planned routine maintenance, during which non-dedicated PMPU's that are normally controlled by the CCCD continue to operate, and process vent emissions are controlled as specified in paragraphs (h)(2) and (3) of this section, must not exceed 240 hours in any 365-day period.

(6) While being controlled as specified in paragraphs (h)(2) and (3) of this section, the process vents may not be used in emissions averaging.

[63 FR 50326, Sept. 21, 1998, as amended at 65 FR 52600, Aug. 29, 2000; 66 FR 40131, Aug. 2, 2001]

§ 63.1253 Standards: Storage tanks.

(a) Except as provided in paragraphs (d), (e), and (f) of this section, the owner or operator of a storage tank meeting the criteria of paragraph (a)(1) of this section is subject to the requirements of paragraph (b) of this section. Except as provided in paragraphs (d), (e), and (f) of this section, the owner or operator of a storage tank meeting the criteria of paragraph (a)(2) of this section is subject to the requirements of paragraph (c) of this section. Compliance with the provisions of paragraphs (b) and (c) of this section is demonstrated using the initial compliance procedures in §63.1257(c) and the monitoring requirements in §63.1258.

(1) A storage tank with a design capacity greater than or equal to 38 m^3 but less than 75 m^3 storing a liquid for which the maximum true vapor pressure of total HAP is greater than or equal to 13.1 kPa.

(2) A storage tank with a design capacity greater than or equal to 75 m^3 storing a liquid for which the maximum true vapor pressure of total HAP is greater than or equal to 13.1 kPa.

(b) The owner or operator of a storage tank shall equip the affected storage tank with either a fixed roof with internal floating roof, an external floating roof, an external floating roof converted to an internal floating roof, or a closed-vent system meeting the conditions of §63.1252(b) with a control device that meets any of the following conditions:

(1) Reduces inlet emissions of total HAP by 90 percent by weight or greater;

(2) Reduces emissions to outlet concentrations less than or equal to 20 ppmv as TOC and less than or equal to 20 ppmv as hydrogen halides and halogens;

(3) Is an enclosed combustion device that provides a minimum residence time of 0.5 seconds at a minimum temperature of 760 °C;

(4) Is a flare that meets the requirements of §63.11(b); or

(5) Is a control device specified in §63.1257(a)(4).

(c) The owner or operator of a storage tank shall equip the affected storage tank with either a fixed roof with internal floating roof, an external floating roof, an external floating roof converted to an internal floating roof, or a closed-vent system meeting the conditions of §63.1252(b) with a control device that meets any of the following conditions:

(1) Reduces inlet emissions of total HAP as specified in paragraph (c)(1) (i) or (ii) of this section:

(i) By 95 percent by weight or greater; or (ii) If the owner or operator can demonstrate that a control device installed on a storage tank on or before April 2, 1997 is designed to reduce inlet emissions of total HAP by greater than or equal to 90 percent by weight but less than 95 percent by weight, then the control device is required to be operated to reduce inlet emissions of total HAP by 90 percent or greater.

(2) Reduces emissions to outlet concentrations less than or equal to 20 ppmv as TOC and less than or equal to 20 ppmv as hydrogen halides and halogens;

(3) Is an enclosed combustion device that provides a minimum residence time of 0.5 seconds at a minimum temperature of 760 °C;

(4) Is a flare that meets the requirements of §63.11(b); or

(5) Is a control device specified in §63.1257(a)(4).

(d) As an alternative standard, the owner or operator of an existing or new affected source may comply with the storage tank standards by routing storage tank vents to a combustion control device achieving an outlet TOC concentration, as calibrated on methane or the predominant HAP, of 20 ppmv or less, and an outlet concentration of hydrogen halides and halogens of 20 ppmv or less. If the owner or operator is routing emissions to a noncombustion control device, it must achieve an outlet TOC concentration, as calibrated on methane or the predominant HAP, of 50 ppmv or less, and an outlet concentration of hydrogen halides and halogens of 50 ppmv or less. Compliance with the

outlet concentrations shall be determined by the initial compliance procedures of §63.1257(c)(4) and the continuous emission monitoring requirements of §63.1258(b)(5).

(e) *Planned routine maintenance.* The specifications and requirements in paragraphs (b) through (d) of this section for control devices do not apply during periods of planned routine maintenance. Periods of planned routine maintenance of the control devices (including CCCD subject to §63.1252(h)), during which the control device does not meet the specifications of paragraphs (b) through (d) of this section, as applicable, shall not exceed 240 hours in any 365-day period. The owner or operator may submit an application to the Administrator requesting an extension of this time limit to a total of 360 hours in any 365-day period. The application must explain why the extension is needed, it must specify that no material will be added to the storage tank between the time the 240-hour limit is exceeded and the control device is again operational, and it must be submitted at least 60 days before the 240-hour limit will be exceeded.

(f) *Vapor balancing alternative.* As an alternative to the requirements in paragraphs (b) and (c) of this section, the owner or operator of an existing or new affected source may implement vapor balancing in accordance with paragraphs (f)(1) through (7) of this section.

(1) The vapor balancing system must be designed and operated to route organic HAP vapors displaced from loading of the storage tank to the railcar or tank truck from which the storage tank is filled.

(2) Tank trucks and railcars must have a current certification in accordance with the U.S. Department of Transportation (DOT) pressure test requirements of 49 CFR part 180 for tank trucks and 49 CFR 173.31 for railcars.

(3) Hazardous air pollutants must only be unloaded from tank trucks or railcars when vapor collection systems are connected to the storage tank's vapor collection system.

(4) No pressure relief device on the storage tank, or on the railcar, or tank truck shall open during loading or as a result of diurnal temperature changes (breathing losses).

(5) Pressure relief devices on affected storage tanks must be set to no less than 2.5 psig at all times to prevent breathing losses. The owner or operator shall record the setting as specified in §63.1259(b)(12) and comply with the requirements for each pressure relief valve in paragraphs (f)(5)(i) through (iii) of this section:

(i) The pressure relief valve shall be monitored quarterly using the method described in §63.180(b).

(ii) An instrument reading of 500 ppmv or greater defines a leak.

(iii) When a leak is detected, it shall be repaired as soon as practicable, but no later than 5 days after it is detected, and the owner or operator shall comply with the recordkeeping requirements of §63.1255(g)(4)(i) through (iv).

(6) Railcars or tank trucks that deliver HAP to an affected storage tank must be reloaded or cleaned at a facility that utilizes one of the control techniques in paragraph (f)(6)(i) through (ii) of this section:

(i) The railcar or tank truck must be connected to a closed-vent system with a control device that reduces inlet emissions of HAP by 90 percent by weight or greater; or

(ii) A vapor balancing system designed and operated to collect organic HAP vapor displaced from the tank truck or railcar during reloading must be used to route the collected HAP vapor to the storage tank from which the liquid being transferred originated.

(7) The owner or operator of the facility where the railcar or tank truck is reloaded or cleaned must comply with the requirements in paragraph (f)(7)(i) through (iii) of this section:

(i) Submit to the owner or operator of the affected storage tank and to the Administrator a written certification that the reloading or cleaning facility will meet the requirements of this section. The certifying entity may revoke the written certification by sending a written statement to the owner or operator of the affected storage tank giving at least 90

days notice that the certifying entity is rescinding acceptance of responsibility for compliance with the requirements of this paragraph (b)(7).

(ii) If complying with paragraph (f)(6)(i) of this section, demonstrate initial compliance in accordance with §63.1257(c), demonstrate continuous compliance in accordance with §63.1258, keep records as specified in §63.1259, and prepare reports as specified in §63.1260.

(iii) If complying with paragraph (f)(6)(ii) of this section, keep records of:

(A) The equipment to be used and the procedures to be followed when reloading the railcar or tank truck and displacing vapors to the storage tank from which the liquid originates, and

(B) Each time the vapor balancing system is used to comply with paragraph (f)(6)(ii) of this section.

[63 FR 50326, Sept. 21, 1998, as amended at 65 FR 52601, Aug. 29, 2000; 66 FR 40132, Aug. 2, 2001; 70 FR 25669, May 13, 2005]

§ 63.1254 Standards: Process vents.

(a) *Existing sources.* For each process, the owner or operator of an existing affected source must comply with the requirements in paragraphs (a)(1) and (3) of this section or paragraphs (a)(2) and (3) of this section. Initial compliance with the required emission limits or reductions in paragraphs (a)(1) through (3) of this section is demonstrated in accordance with the initial compliance procedures described in §63.1257(d), and continuous compliance is demonstrated in accordance with the monitoring requirements described in §63.1258.

(1) *Process-based emission reduction requirement.* (i) Uncontrolled HAP emissions from the sum of all process vents within a process that are not subject to the requirements of paragraph (a)(3) of this section shall be reduced by 93 percent or greater by weight, or as specified in paragraph (a)(1)(ii) of this section. Notification of changes in the compliance method shall be reported according to the procedures in §63.1260(h).

(ii) Any one or more vents within a process may be controlled in accordance with any of the procedures in paragraphs (a)(1)(ii)(A) through (D) of this section. All other vents within the process must be controlled as specified in paragraph (a)(1)(i) of this section.

(A) To outlet concentrations less than or equal to 20 ppmv as TOC and less than or equal to 20 ppmv as hydrogen halides and halogens;

(B) By a flare that meets the requirements of §63.11(b);

(C) By a control device specified in §63.1257(a)(4); or

(D) In accordance with the alternative standard specified in paragraph (c) of this section.

(2) *Process-based annual mass limit.* (i) Actual HAP emissions from the sum of all process vents within a process must not exceed 900 kilograms (kg) in any 365-day period.

(ii) Actual HAP emissions from the sum of all process vents within processes complying with paragraph (a)(2)(i) of this section are limited to a maximum of 1,800 kg in any 365-day period.

(iii) Emissions from vents that are subject to the requirements of paragraph (a)(3) of this section and emissions from vents that are controlled in accordance with the procedures in paragraph (c) of this section may be excluded from the sums calculated in paragraphs (a)(2)(i) and (ii) of this section.

(iv) The owner or operator may switch from compliance with paragraph (a)(2) of this section to compliance with paragraph (a)(1) of this section only after at least 1 year of operation in compliance with paragraph (a)(2) of this

section. Notification of such a change in the compliance method shall be reported according to the procedures in §63.1260(h).

(3) *Individual vent emission reduction requirements.* (i) Except as provided in paragraph (a)(3)(ii) of this section, uncontrolled HAP emissions from a process vent must be reduced by 98 percent or in accordance with any of the procedures in paragraphs (a)(1)(ii)(A) through (D) of this section if the uncontrolled HAP emissions from the vent exceed 25 tons per year, and the flow-weighted average flowrate (FRa) calculated using Equation 1 of this subpart is less than or equal to the flowrate index (FRI) calculated using Equation 2 of this subpart.

$$FR_a = \frac{\sum_{i=1}^{N}(D_i)(FR_i)}{\sum_{i=1}^{N}(D_i)} \qquad (Eq.\ 1)$$

$$FRI = 0.02 * (\mathrm{HL}) - 1{,}000 \qquad (Eq.\ 2)$$

Where:

FR_a= flow-weighted average flowrate for the vent, scfm

D_i= duration of each emission event, min

FR_i= flowrate of each emission event, scfm

n = number of emission events

FRI = flowrate index, scfm

HL = annual uncontrolled HAP emissions, lb/yr, as defined in §63.1251

(ii) *Grandfathering provisions.* As an alternative to the requirements in paragraph (a)(3)(i) of this section, the owner or operator may comply with the provisions in paragraph (a)(3)(ii)(A), (B), or (C) of this section, if applicable.

(A) *Control device operation.* If the owner or operator can demonstrate that a process vent is controlled by a control device meeting the criteria specified in paragraph (a)(3)(ii)(A)(*1*) of this section, then the control device is required to be operated according to paragraphs (a)(3)(ii)(A)(*2*), (*3*), and (*4*) of this section:

(*1*) The control device was installed on any process vent that met the conditions of paragraph (a)(3)(i) of this section on or before April 2, 1997, and was operated to reduce uncontrolled emissions of total HAP by greater than or equal to 93 percent by weight, but less than 98 percent by weight;

(*2*) The device must be operated to reduce inlet emissions of total HAP by 93 percent or by the percent reduction specified for that control device in any preconstruction permit issued pursuant to regulations approved or promulgated through rulemaking under title I (including parts C or D) of the Clean Air Act, whichever is greater;

(*3*) The device must be replaced or upgraded to achieve at least 98 percent reduction of HAP or meet any of the conditions specified in paragraphs (a)(1)(ii)(A) through (D) of this section upon reconstruction or replacement.

(*4*) The device must be replaced or upgraded to achieve at least 98 percent reduction of HAP or meet any of the conditions specified in paragraphs (a)(1)(ii)(A) through (D) of this section by April 2, 2007, or 15 years after issuance of the preconstruction permit, whichever is later.

(B) *Process operations.* If a process meets all of the conditions specified in paragraphs (a)(3)(ii)(B)(*1*) through (*3*) of this section, the required level of control for the process is the level that was achieved on or before April 2, 1997. This level of control is demonstrated using the same procedures that are used to demonstrate compliance with paragraph (a)(1) of this section.

(*1*) At least one vent in the process met the conditions of paragraph (a)(3)(i) of this section on or before April 2, 1997; and

(*2*) The overall control for the process on or before April 2, 1997 was greater than or equal to 93 percent by weight, but less than 98 percent by weight; and

(*3*) The production-indexed HAP consumption factor for the 12-month period in which the process was operated prior to the compliance date is less than one-half of the 3-year average baseline value established no earlier than the 1987 through 1989 calendar years.

(C) *Hydrogenation vents.* Processes meeting the conditions of paragraphs (a)(3)(ii)(C)(*1*) through (*3*) of this section are required to be operated to maintain the level of control achieved on or before April 2, 1997. For all other processes meeting the conditions of paragraph (a)(3)(ii)(C)(*3*) of this section, uncontrolled HAP emissions from the sum of all process vents within the process must be reduced by 95 percent or greater by weight.

(*1*) Processes containing a process vent that met the conditions of paragraph (a)(3)(i) of this section on or before April 2, 1997; and

(*2*) Processes that are controlled to greater than or equal to 93 percent by weight, but less than 98 percent by weight; and

(*3*) Processes with a hydrogenation vent that, in conjunction with all other process vents from the process that do not meet the conditions of paragraph (a)(3)(i) of this section, cannot meet the requirements of paragraph (a)(1) or (2) of this section.

(4) *Planned routine maintenance.* For each PMPU that is controlled with a CCCD, the owner or operator must comply with the provisions specified in either paragraph (a)(4)(i), (ii), or (iii) of this section during periods of planned routine maintenance of the CCCD. The owner or operator is not required to comply with the same provision for all of the PMPU's controlled by the CCCD.

(i) Shutdown the affected process.

(ii) Comply with the requirements of paragraphs (a)(1) through (3) of this section by using other means.

(iii) For a non-dedicated PMPU, implement the procedures described in paragraphs (a)(4)(iii)(A) through (C) of this section for those process vents that are normally controlled by the CCCD. This option is not available for process vents from dedicated PMPU's.

(A) If the owner or operator uses a CCCD to comply with the 93 percent reduction requirement in paragraph (a)(1)(i) or (ii) of this section, the outlet concentration limit in paragraph (a)(1)(ii)(A) of this section, the alternative standard as specified in paragraphs (a)(1)(ii)(D) and (c) of this section, or the annual mass limit in paragraph (a)(2) of this section, implement the provisions in §63.1252(h) during planned routine maintenance of the CCCD.

(B) If the owner or operator reduces HAP emissions from process vents by using a CCCD that is also a control device specified in §63.1257(a)(4), implement the provisions in §63.1252(h) during planned routine maintenance of the CCCD.

(C) If the owner or operator uses a CCCD to reduce emissions from a process vent subject to paragraph (a)(3) of this section, implement the planned routine maintenance provisions in §63.1252(h) for that vent only if the reason the planned routine maintenance is needed, and the reason it cannot be performed at a time when the vent subject to paragraph (a)(3) of this section is not operating, has been described in the Notification of Compliance Status Report or a periodic report submitted before the planned routine maintenance event.

(b) *New sources.* (1) Except as provided in paragraph (b)(2) of this section, uncontrolled HAP emissions from the sum of all process vents within a process at a new affected source shall be reduced by 98 percent or greater by weight or controlled in accordance with any of requirements of paragraphs (a)(1)(ii)(A) through (D) of this section. Initial compliance with the required emission limit or reduction is demonstrated in accordance with the initial compliance procedures in §63.1257(d), and continuous compliance is demonstrated in accordance with the monitoring requirements described in §63.1258.

(2) *Annual mass limit.* The actual HAP emissions from the sum of all process vents for which the owner or operator is not complying with paragraph (b)(1) of this section are limited to 900 kg in any 365-day period.

(c) *Alternative standard.* As an alternative standard, the owner or operator of an existing or new affected source may comply with the process vent standards by routing vents from a process to a combustion control device achieving an outlet TOC concentration, as calibrated on methane or the predominant HAP, of 20 ppmv or less, and an outlet concentration of hydrogen halides and halogens of 20 ppmv or less. If the owner or operator is routing emissions to a noncombustion control device, it must achieve an outlet TOC concentration, as calibrated on methane or the predominant HAP, of 50 ppmv or less, and an outlet concentration of hydrogen halides and halogens of 50 ppmv or less. Any process vents within a process that are not routed to this control device must be controlled in accordance with the provisions of paragraph (a) or (b) of this section, as applicable. Initial compliance with the outlet concentrations is demonstrated in accordance with the initial compliance procedures described in §63.1257(d)(1)(iv), and continuous compliance is demonstrated in accordance with the emission monitoring requirements described in §63.1258(b)(5).

[65 FR 52601, Aug. 29, 2000, as amended at 66 FR 40132, Aug. 2, 2001]

§ 63.1255 Standards: Equipment leaks.

(a) *General equipment leak requirements.* (1) The provisions of this section apply to pumps, compressors, agitators, pressure relief devices, sampling connection systems, open-ended valves or lines, valves, connectors, instrumentation systems, control devices, and closed-vent systems required by this section that are intended to operate in organic hazardous air pollutant service 300 hours or more during the calendar year within a source subject to the provisions of this subpart.

(2) *Consistency with other regulations.* After the compliance date for a process, equipment subject to both this section and either of the following will be required to comply only with the provisions of this subpart:

(i) 40 CFR part 60.

(ii) 40 CFR part 61.

(3) [Reserved]

(4) The provisions in §63.1(a)(3) of subpart A of this part do not alter the provisions in paragraph (a)(2) of this section.

(5) Lines and equipment not containing process fluids are not subject to the provisions of this section. Utilities, and other nonprocess lines, such as heating and cooling systems which do not combine their materials with those in the processes they serve, are not considered to be part of a process.

(6) The provisions of this section do not apply to bench-scale processes, regardless of whether the processes are located at the same plant site as a process subject to the provisions of this subpart.

(7) Equipment to which this section applies shall be identified such that it can be distinguished readily from equipment that is not subject to this section. Identification of the equipment does not require physical tagging of the equipment. For example, the equipment may be identified on a plant site plan, in log entries, or by designation of process boundaries by some form of weatherproof identification. If changes are made to the affected source subject to the leak detection requirements, equipment identification for each type of component shall be updated, if needed, within 90 calendar days or by the next Periodic Report following the end of the monitoring period for that component, whichever is later.

(8) Equipment that is in vacuum service is excluded from the requirements of this section.

(9) Equipment that is in organic HAP service, but is in such service less than 300 hours per calendar year, is excluded from the requirements of this section if it is identified as required in paragraph (g)(9) of this section.

(10) When each leak is detected by visual, audible, or olfactory means, or by monitoring as described in §63.180(b) or (c), the following requirements apply:

(i) A weatherproof and readily visible identification, marked with the equipment identification number, shall be attached to the leaking equipment.

(ii) The identification on a valve in light liquid or gas/vapor service may be removed after it has been monitored as specified in paragraph (e)(7)(iii) of this section, and no leak has been detected during the follow-up monitoring.

(iii) The identification on equipment, except on a valve in light liquid or gas/vapor service, may be removed after it has been repaired.

(11) Except as provided in paragraph (a)(11)(i) of this section, all terms in this subpart that define a period of time for completion of required tasks (e.g., weekly, monthly, quarterly, annual) refer to the standard calendar periods unless specified otherwise in the section or paragraph that imposes the requirement.

(i) If the initial compliance date does not coincide with the beginning of the standard calendar period, an owner or operator may elect to utilize a period beginning on the compliance date, or may elect to comply in accordance with the provisions of paragraph (a)(11)(ii) or (iii) of this section.

(ii) Time periods specified in this subpart for completion of required tasks may be changed by mutual agreement between the owner or operator and the Administrator, as specified in subpart A of this part. For each time period that is changed by agreement, the revised period shall remain in effect until it is changed. A new request is not necessary for each recurring period.

(iii) Except as provided in paragraph (a)(11)(i) or (ii) of this section, where the period specified for compliance is a standard calendar period, if the initial compliance date does not coincide with the beginning of the calendar period, compliance shall be required according to the schedule specified in paragraph (a)(11)(iii)(A) or (B) of this section, as appropriate.

(A) Compliance shall be required before the end of the standard calendar period within which the initial compliance date occurs if there remain at least 3 days for tasks that must be performed weekly, at least 2 weeks for tasks that must be performed monthly, at least 1 month for tasks that must be performed each quarter, or at least 3 months for tasks that must be performed annually; or

(B) In all other cases, compliance shall be required before the end of the first full standard calendar period after the period within which the initial compliance date occurs.

(iv) In all instances where a provision of this subpart requires completion of a task during each of multiple successive periods, an owner or operator may perform the required task at any time during each period, provided the task is conducted at a reasonable interval after completion of the task during the previous period.

(12) In all cases where the provisions of this subpart require an owner or operator to repair leaks by a specified time after the leak is detected, it is a violation of this section to fail to take action to repair the leaks within the specified time. If action is taken to repair the leaks within the specified time, failure of that action to successfully repair the leak is not a violation of this section. However, if the repairs are unsuccessful, a leak is detected and the owner or operator shall take further action as required by applicable provisions of this section.

(b) *References.* (1) The owner or operator of a source subject to this section shall comply with the provisions of subpart H of this part, as specified in paragraphs (b)(2) through (4) of this section. The term “process unit” as used in subpart H of this part shall be considered to be defined the same as “group of processes” for sources subject to this

subpart GGG. The term “fuel gas system,” as used in subpart H of this part, shall not apply for the purposes of this subpart GGG.

(2) Sections 63.160, 63.161, 63.162, 63.163, 63.167, 63.168, 63.170, 63.173, 63.175, 63.176, 63.181, and 63.182 shall not apply for the purposes of this subpart GGG. The owner or operator shall comply with the provisions specified in paragraphs (b)(2)(i) through (viii) of this section.

(i) Sections 63.160 and 63.162 shall not apply; instead, the owner or operator shall comply with paragraph (a) of this section;

(ii) Section 63.161 shall not apply; instead, the owner or operator shall comply with §63.1251;

(iii) Sections 63.163 and 63.173 shall not apply; instead, the owner or operator shall comply with paragraph (c) of this section;

(iv) Section 63.167 shall not apply; instead, the owner or operator shall comply with paragraph (d) of this section;

(v) Section 63.168 shall not apply; instead, the owner or operator shall comply with paragraph (e) of this section;

(vi) Section 63.170 shall not apply; instead, the owner or operator shall comply with §63.1254;

(vii) Section 63.181 shall not apply; instead, the owner or operator shall comply with paragraph (g) of this section; and

(viii) Section 63.182 shall not apply; instead, the owner or operator shall comply with paragraph (h) of this section.

(3) The owner or operator shall comply with §§63.164, 63.165, 63.166, 63.169, 63.177, and 63.179 in their entirety, except that when these sections reference other sections of subpart H of this part, the references shall mean the sections specified in paragraphs (b)(2) and (4) of this section. Section 63.164 applies to compressors. Section 63.165 applies to pressure relief devices in gas/vapor service. Section 63.166 applies to sampling connection systems. Section 63.169 applies to pumps, valves, connectors, and agitators in heavy liquid service; instrumentation systems; and pressure relief devices in liquid service. Section 63.177 applies to general alternative means of emission limitation. Section 63.179 applies to alternative means of emission limitation for enclosed-vented process units.

(4) The owner or operator shall comply with §§63.171, 63.172, 63.174, 63.178, and 63.180, except as specified in paragraphs (b)(4)(i) through (vi) of this section.

(i) Section 63.171 shall apply, except §63.171(a) shall not apply. Instead, delay of repair of equipment for which leaks have been detected is allowed if one of the conditions in paragraphs (b)(4)(i)(A) through (B) exists:

(A) The repair is technically infeasible without a process shutdown. Repair of this equipment shall occur by the end of the next scheduled process shutdown.

(B) The owner or operator determines that repair personnel would be exposed to an immediate danger if attempting to repair without a process shutdown. Repair of this equipment shall occur by the end of the next scheduled process shutdown.

(ii) Section 63.172 shall apply for closed-vent systems used to comply with this section, and for control devices used to comply with this section only, except:

(A) Section 63.172(k) and (l) shall not apply. The owner or operator shall instead comply with paragraph (f) of this section.

(B) Owners or operators may, instead of complying with the provisions of §63.172(f), design a closed-vent system to operate at a pressure below atmospheric pressure. The system shall be equipped with at least one pressure gage or other pressure measurement device that can be read from a readily accessible location to verify that negative pressure is being maintained in the closed-vent system when the associated control device is operating.

(C) The requirements apply at all times, except as specified in §63.1250(g). The owner or operator may not comply with the planned routine maintenance provisions in §63.1252(h).

(iii) Section 63.174 shall apply except:

(A) Section 63.174(f), (g), and (h) shall not apply. Instead of §63.174(f), (g), and (h), the owner or operator shall comply with paragraph (f) of this section. Section 63.174(b)(3) shall not apply. Instead of §63.174(b)(3), the owner or operator shall comply with paragraphs (b)(4)(iii)(B) through (F) of this section.

(B) If the percent leaking connectors in a group of processes was greater than or equal to 0.5 percent during the initial monitoring period, monitoring shall be performed once per year until the percent leaking connectors is less than 0.5 percent.

(C) If the percent leaking connectors in the group of processes was less than 0.5 percent, but equal to or greater than 0.25 percent, during the initial or last required monitoring period, the owner or operator may elect to monitor once every 4 years. An owner or operator may comply with the requirements of this paragraph by monitoring at least 40 percent of the connectors in the first 2 years and the remainder of the connectors within the next 2 years. The percent leaking connectors will be calculated for the total of all required monitoring performed during the 4-year period.

(D) Except as provided in paragraph (b)(4)(iii)(B) of this section, if leaking connectors comprise at least 0.5 percent but less than 1.0 percent of the connectors during the last monitoring period, the owner or operator shall monitor at least once every 2 years for the next monitoring period. At the end of that 2-year monitoring period, if the percent leaking connectors is greater than or equal to 0.5 percent, the owner or operator shall monitor once per year until the percent leaking connectors is less than 0.5 percent. If, at the end of a monitoring period, the percent leaking connectors is less than 0.5 percent, the owner or operator shall monitor in accordance with paragraph (b)(4)(iii)(C) or (F) of this section, as appropriate.

(E) If an owner or operator determines that 1 percent or greater of the connectors in a group of processes are leaking, the owner or operator shall monitor the connectors once per year. The owner or operator may elect to use the provisions of paragraph (b)(4)(iii)(C), (D), or (F) of this section, as appropriate, after a monitoring period in which less than 1 percent of the connectors are determined to be leaking.

(F) The owner or operator may elect to perform monitoring once every 8 years if the percent leaking connectors in the group of processes was less than 0.25 percent during the initial or last required monitoring period. An owner or operator shall monitor at least 50 percent of the connectors in the first 4 years and the remainder of the connectors within the next 4 years. If the percent leaking connectors in the first 4 years is equal to or greater than 0.35 percent, the monitoring program shall revert at that time to the appropriate monitoring frequency specified in paragraph (b)(4)(iii)(C), (D), or (E) of this section.

(iv) Section 63.178 shall apply except:

(A) Section 63.178(b), requirements for pressure testing, may be applied to all processes (not just batch processes) and to supply lines between storage and processing areas.

(B) For pumps, the phrase “at the frequencies specified in Table 1 of this subpart” in §63.178(c)(3)(iii) shall mean “quarterly” for the purposes of this subpart.

(v) Section 63.180 shall apply except §63.180(b)(4)(ii)(A) through (C) shall not apply. Instead, calibration gases shall be a mixture of methane and air at a concentration of approximately, but less than, 10,000 parts per million methane for agitators; 2,000 parts per million for pumps; and 500 parts per million for all other equipment, except as provided in §63.180(b)(4)(iii).

(vi) When §§63.171, 63.172, 63.174, 63.178, and 63.180 reference other sections in subpart H of this part, the references shall mean those sections specified in paragraphs (b)(2) and (b)(4)(i) through (v) of this section, as applicable.

(c) *Standards for pumps in light liquid service and agitators in gas/vapor service and in light liquid service.* (1) The provisions of this section apply to each pump that is in light organic HAP liquid service, and to each agitator in organic HAP gas/vapor service or in light organic HAP liquid service.

(2)(i) *Monitoring.* Each pump and agitator subject to this section shall be monitored quarterly to detect leaks by the method specified in §63.180(b) except as provided in §§63.177, 63.178, paragraph (f) of this section, and paragraphs (c)(5) through (9) of this section.

(ii) *Leak definition.* The instrument reading, as determined by the method as specified in §63.180(b), that defines a leak is:

(A) For agitators, an instrument reading of 10,000 parts per million or greater.

(B) For pumps, an instrument reading of 2,000 parts per million or greater.

(iii) *Visual Inspections.* Each pump and agitator shall be checked by visual inspection each calendar week for indications of liquids dripping from the pump or agitator seal. If there are indications of liquids dripping from the pump or agitator seal at the time of the weekly inspection, the owner or operator shall follow the procedure specified in either paragraph (c)(2)(iii)(A) or (B) of this section prior to the next weekly inspection.

(A) The owner or operator shall monitor the pump or agitator by the method specified in §63.180(b). If the instrument reading indicates a leak as specified in paragraph (c)(2)(ii) of this section, a leak is detected.

(B) The owner or operator shall eliminate the visual indications of liquids dripping.

(3) *Repair provisions.* (i) When a leak is detected pursuant to paragraph (c)(2)(i), (c)(2)(iii)(A), (c)(5)(iv)(A), or (c)(5)(vi)(B) of this section, it shall be repaired as soon as practicable, but not later than 15 calendar days after it is detected, except as provided in paragraph (b)(4)(i) of this section.

(ii) A first attempt at repair shall be made no later than 5 calendar days after the leak is detected. First attempts at repair include, but are not limited to, the following practices where practicable:

(A) Tightening of packing gland nuts.

(B) Ensuring that the seal flush is operating at design pressure and temperature.

(4) *Calculation of percent leakers.* (i) The owner or operator shall decide no later than the end of the first monitoring period what groups of processes will be developed. Once the owner or operator has decided, all subsequent percent calculations shall be made on the same basis.

(ii) If, calculated on a 1-year rolling average, the greater of either 10 percent or three of the pumps in a group of processes leak, the owner or operator shall monitor each pump once per month, until the calculated 1-year rolling average value drops below 10 percent or three pumps, as applicable.

(iii) The number of pumps in a group of processes shall be the sum of all the pumps in organic HAP service, except that pumps found leaking in a continuous process within 1 quarter after startup of the pump shall not count in the percent leaking pumps calculation for that one monitoring period only.

(iv) Percent leaking pumps shall be determined by the following Equation 3:

$\%P_L = [(P_L — P_S)/(P_T — P_S)] \times 100$ (Eq. 3)

Where:

$\%P_L$ = percent leaking pumps

P_L= number of pumps found leaking as determined through periodic monitoring as required in paragraphs (c)(2)(i) and (ii) of this section.

P_T= total pumps in organic HAP service, including those meeting the criteria in paragraphs (c)(5) and (6) of this section.

P_S= number of pumps in a continuous process leaking within 1 quarter of startup during the current monitoring period.

(5) *Exemptions.* Each pump or agitator equipped with a dual mechanical seal system that includes a barrier fluid system is exempt from the requirements of paragraphs (c)(1) through (c)(4)(iii) of this section, provided the following requirements are met:

(i) Each dual mechanical seal system is:

(A) Operated with the barrier fluid at a pressure that is at all times greater than the pump/agitator stuffing box pressure; or

(B) Equipped with a barrier fluid degassing reservoir that is connected by a closed-vent system to a control device that complies with the requirements of paragraph (b)(4)(ii) of this section; or

(C) Equipped with a closed-loop system that purges the barrier fluid into a process stream.

(ii) The barrier fluid is not in light liquid service.

(iii) Each barrier fluid system is equipped with a sensor that will detect failure of the seal system, the barrier fluid system, or both.

(iv) Each pump/agitator is checked by visual inspection each calendar week for indications of liquids dripping from the pump/agitator seal. If there are indications of liquids dripping from the pump or agitator seal at the time of the weekly inspection, the owner or operator shall follow the procedures specified in either paragraph (c)(5)(iv)(A) or (B) of this section prior to the next required inspection.

(A) The owner or operator shall monitor the pump or agitator using the method specified in §63.180(b) to determine if there is a leak of organic HAP in the barrier fluid. If the instrument reading indicates a leak, as specified in paragraph (c)(2)(ii) of this section, a leak is detected.

(B) The owner or operator shall eliminate the visual indications of liquids dripping.

(v) Each sensor as described in paragraph (c)(5)(iii) of this section is observed daily or is equipped with an alarm unless the pump is located within the boundary of an unmanned plant site.

(vi)(A) The owner or operator determines, based on design considerations and operating experience, criteria applicable to the presence and frequency of drips and to the sensor that indicate failure of the seal system, the barrier fluid system, or both.

(B) If indications of liquids dripping from the pump/agitator seal exceed the criteria established in paragraph (c)(5)(vi)(A) of this section, or if, based on the criteria established in paragraph (c)(5)(vi)(A) of this section, the sensor indicates failure of the seal system, the barrier fluid system, or both, a leak is detected.

(vii) When a leak is detected pursuant to paragraph (c)(5)(iv)(A) or (B) of this section, the leak must be repaired as specified in paragraph (c)(3) of this section.

(6) Any pump/agitator that is designed with no externally actuated shaft penetrating the pump/agitator housing is exempt from the requirements of paragraphs (c)(1) through (3) of this section.

(7) Any pump/agitator equipped with a closed-vent system capable of capturing and transporting any leakage from the seal or seals back to the process or to a control device that complies with the requirements of paragraph (b)(4)(ii) of this section is exempt from the requirements of paragraphs (c)(2) through (5) of this section.

(8) Any pump/agitator that is located within the boundary of an unmanned plant site is exempt from the weekly visual inspection requirement of paragraphs (c)(2)(iii) and (c)(5)(iv) of this section, and the daily requirements of paragraph (c)(5)(v) of this section, provided that each pump/agitator is visually inspected as often as practicable and at least monthly.

(9) If more than 90 percent of the pumps in a group of processes meet the criteria in either paragraph (c)(5) or (6) of this section, the group of processes is exempt from the requirements of paragraph (c)(4) of this section.

(d) *Standards: Open-ended valves or lines.* (1)(i) Each open-ended valve or line shall be equipped with a cap, blind flange, plug, or a second valve, except as provided in §63.177 and paragraphs (d)(4) through (6) of this section.

(ii) The cap, blind flange, plug, or second valve shall seal the open end at all times except during operations requiring process fluid flow through the open-ended valve or line, or during maintenance or repair. The cap, blind flange, plug, or second valve shall be in place within 1 hour of cessation of operations requiring process fluid flow through the open-ended valve or line, or within 1 hour of cessation of maintenance or repair. The owner or operator is not required to keep a record documenting compliance with the 1-hour requirement.

(2) Each open-ended valve or line equipped with a second valve shall be operated in a manner such that the valve on the process fluid end is closed before the second valve is closed.

(3) When a double block and bleed system is being used, the bleed valve or line may remain open during operations that require venting the line between the block valves but shall comply with paragraph (d)(1) of this section at all other times.

(4) Open-ended valves or lines in an emergency shutdown system which are designed to open automatically in the event of a process upset are exempt from the requirements of paragraphs (d)(1) through (d)(3) of this section.

(5) Open-ended valves or lines containing materials which would autocatalytically polymerize are exempt from the requirements of paragraphs (d)(1) through (d)(3) of this section.

(6) Open-ended valves or lines containing materials which could cause an explosion, serious overpressure, or other safety hazard if capped or equipped with a double block and bleed system as specified in paragraphs (d)(1) through (d)(3) of this section are exempt from the requirements of paragraphs (d)(1) through (d)(3) of this section.

(e) *Standards: Valves in gas/vapor service and in light liquid service.* (1) The provisions of this section apply to valves that are either in gas organic HAP service or in light liquid organic HAP service.

(2) For existing and new affected sources, all valves subject to this section shall be monitored, except as provided in paragraph (f) of this section and in §63.177, by no later than 1 year after the compliance date.

(3) *Monitoring.* The owner or operator of a source subject to this section shall monitor all valves, except as provided in paragraph (f) of this section and in §63.177, at the intervals specified in paragraph (e)(4) of this section and shall comply with all other provisions of this section, except as provided in paragraph (b)(4)(i) of this section, §§63.178 and 63.179.

(i) The valves shall be monitored to detect leaks by the method specified in §63.180(b).

(ii) An instrument reading of 500 parts per million or greater defines a leak.

(4) *Subsequent monitoring frequencies.* After conducting the initial survey required in paragraph (e)(2) of this section, the owner or operator shall monitor valves for leaks at the intervals specified below:

(i) For a group of processes with 2 percent or greater leaking valves, calculated according to paragraph (e)(6) of this section, the owner or operator shall monitor each valve once per month, except as specified in paragraph (e)(9) of this section.

(ii) For a group of processes with less than 2 percent leaking valves, the owner or operator shall monitor each valve once each quarter, except as provided in paragraphs (e)(4)(iii) through (e)(4)(v) of this section.

(iii) For a group of processes with less than 1 percent leaking valves, the owner or operator may elect to monitor each valve once every 2 quarters.

(iv) For a group of processes with less than 0.5 percent leaking valves, the owner or operator may elect to monitor each valve once every 4 quarters.

(v) For a group of processes with less than 0.25 percent leaking valves, the owner or operator may elect to monitor each valve once every 2 years.

(5) *Calculation of percent leakers.* For a group of processes to which this subpart applies, an owner or operator may choose to subdivide the valves in the applicable group of processes and apply the provisions of paragraph (e)(4) of this section to each subgroup. If the owner or operator elects to subdivide the valves in the applicable group of processes, then the provisions of paragraphs (e)(5)(i) through (e)(5)(viii) of this section apply.

(i) The overall performance of total valves in the applicable group of processes must be less than 2 percent leaking valves, as detected according to paragraphs (e)(3) (i) and (ii) of this section and as calculated according to paragraphs (e)(6) (ii) and (iii) of this section.

(ii) The initial assignment or subsequent reassignment of valves to subgroups shall be governed by the provisions of paragraphs (e)(5)(ii) (A) through (C) of this section.

(A) The owner or operator shall determine which valves are assigned to each subgroup. Valves with less than 1 year of monitoring data or valves not monitored within the last 12 months must be placed initially into the most frequently monitored subgroup until at least 1 year of monitoring data has been obtained.

(B) Any valve or group of valves can be reassigned from a less frequently monitored subgroup to a more frequently monitored subgroup provided that the valves to be reassigned were monitored during the most recent monitoring period for the less frequently monitored subgroup. The monitoring results must be included with the less frequently monitored subgroup's monitoring event and associated next percent leaking valves calculation for that group.

(C) Any valve or group of valves can be reassigned from a more frequently monitored subgroup to a less frequently monitored subgroup provided that the valves to be reassigned have not leaked for the period of the less frequently monitored subgroup (e.g., for the last 12 months, if the valve or group of valves is to be reassigned to a subgroup being monitored annually). Nonrepairable valves may not be reassigned to a less frequently monitored subgroup.

(iii) The owner or operator shall determine every 6 months if the overall performance of total valves in the applicable group of processes is less than 2 percent leaking valves and so indicate the performance in the next periodic report. If the overall performance of total valves in the applicable group of processes is 2 percent leaking valves or greater, the owner or operator shall revert to the program required in paragraphs (e)(2) through (e)(4) of this section. The overall performance of total valves in the applicable group of processes shall be calculated as a weighted average of the percent leaking valves of each subgroup according to the following Equation 4:

$$\%V_{LO} = \frac{\sum_{i=1}^{n}\left(\%V_{Li} \times V_i\right)}{\sum_{i=1}^{n} V_i} \qquad (Eq.\ 4)$$

where:

$\%V_{LO}$= overall performance of total valves in the applicable process or group of processes

$\%V_{Li}$= percent leaking valves in subgroup i, most recent value calculated according to the procedures in paragraphs (e)(6)(ii) and (iii) of this section

V_i= number of valves in subgroup i

(iv) *Records.* In addition to records required by paragraph (g) of this section, the owner or operator shall maintain records specified in paragraphs (e)(5)(iv)(A) through (D) of this section.

(A) Which valves are assigned to each subgroup,

(B) Monitoring results and calculations made for each subgroup for each monitoring period,

(C) Which valves are reassigned and when they were reassigned, and

(D) The results of the semiannual overall performance calculation required in paragraph (e)(5)(iii) of this section.

(v) The owner or operator shall notify the Administrator no later than 30 days prior to the beginning of the next monitoring period of the decision to subgroup valves. The notification shall identify the participating processes and the valves assigned to each subgroup.

(vi) *Semiannual reports.* In addition to the information required by paragraph (h)(3) of this section, the owner or operator shall submit in the periodic reports the information specified in paragraphs (e)(5)(vi)(A) and (B) of this section.

(A) Valve reassignments occurring during the reporting period, and

(B) Results of the semiannual overall performance calculation required by paragraph (e)(5)(iii) of this section.

(vii) To determine the monitoring frequency for each subgroup, the calculation procedures of paragraph (e)(6)(iii) of this section shall be used.

(viii) Except for the overall performance calculations required by paragraphs (e)(5)(i) and (e)(5)(iii) of this section, each subgroup shall be treated as if it were a process for the purposes of applying the provisions of this section.

(6)(i) The owner or operator shall decide no later than the implementation date of this subpart or upon revision of an operating permit how to group the processes. Once the owner or operator has decided, all subsequent percentage calculations shall be made on the same basis.

(ii) Percent leaking valves for each group of processes or subgroup shall be determined by the following Equation 5:

$\%V_L = [V_L/V_T] \times 100$ (Eq. 5)

Where:

$\%V_L$= percent leaking valves as determined through periodic monitoring required in paragraphs (e)(2) through (4) of this section.

V_T= total valves monitored, in a monitoring period excluding valves monitored as required by (e)(7)(iii) of this section

(iii) When determining monitoring frequency for each group of processes or subgroup subject to monthly, quarterly, or semiannual monitoring frequencies, the percent leaking valves shall be the arithmetic average of the percent leaking

valves from the last two monitoring periods. When determining monitoring frequency for each group of processes or subgroup subject to annual or biennial (once every 2 years) monitoring frequencies, the percent leaking valves shall be the arithmetic average of the percent leaking valves from the last three monitoring periods.

(iv)(A) Nonrepairable valves shall be included in the calculation of percent leaking valves the first time the valve is identified as leaking and nonrepairable and as required to comply with paragraph (e)(6)(iv)(B) of this section. Otherwise, a number of nonrepairable valves (identified and included in the percent leaking calculation in a previous period) up to a maximum of 1 percent of the total number of valves in organic HAP service at a process may be excluded from calculation of percent leaking valves for subsequent monitoring periods.

(B) If the number of nonrepairable valves exceeds 1 percent of the total number of valves in organic HAP service at a process, the number of nonrepairable valves exceeding 1 percent of the total number of valves in organic HAP service shall be included in the calculation of percent leaking valves.

(7) *Repair provisions.* (i) When a leak is detected, it shall be repaired as soon as practicable, but no later than 15 calendar days after the leak is detected, except as provided in paragraph (b)(4)(i)) of this section.

(ii) A first attempt at repair shall be made no later than 5 calendar days after each leak is detected.

(iii) When a leak is repaired, the valve shall be monitored at least once within the first 3 months after its repair. Days that the valve is not in organic HAP service shall not be considered part of this 3 month period. The monitoring required by this paragraph is in addition to the monitoring required to satisfy the definitions of “repaired” and “first attempt at repair.”

(A) The monitoring shall be conducted as specified in §63.180(b) and (c) as appropriate to determine whether the valve has resumed leaking.

(B) Periodic monitoring required by paragraphs (e)(2) through (4) of this section may be used to satisfy the requirements of paragraph (e)(7)(iii) of this section, if the timing of the monitoring period coincides with the time specified in paragraph (e)(7)(iii) of this section. Alternatively, other monitoring may be performed to satisfy the requirements of paragraph (e)(7)(iii) of this section, regardless of whether the timing of the monitoring period for periodic monitoring coincides with the time specified in paragraph (e)(7)(iii) of this section.

(C) If a leak is detected by monitoring that is conducted pursuant to paragraph (e)(7)(iii) of this section, the owner or operator shall follow the provisions of paragraphs (e)(7)(iii)(C)(*1*) and (*2*) of this section to determine whether that valve must be counted as a leaking valve for purposes of paragraph (e)(6) of this section.

(*1*) If the owner or operator elects to use periodic monitoring required by paragraphs (e)(2) through (4) of this section to satisfy the requirements of paragraph (e)(7)(iii) of this section, then the valve shall be counted as a leaking valve.

(*2*) If the owner or operator elects to use other monitoring prior to the periodic monitoring required by paragraphs (e)(2) through (4) of this section to satisfy the requirements of paragraph (e)(7)(iii) of this section, then the valve shall be counted as a leaking valve unless it is repaired and shown by periodic monitoring not to be leaking.

(8) First attempts at repair include, but are not limited to, the following practices where practicable:

(i) Tightening of bonnet bolts,

(ii) Replacement of bonnet bolts,

(iii) Tightening of packing gland nuts, and

(iv) Injection of lubricant into lubricated packing.

(9) Any equipment located at a plant site with fewer than 250 valves in organic HAP service in the affected source is exempt from the requirements for monthly monitoring specified in paragraph (e)(4)(i) of this section. Instead, the

owner or operator shall monitor each valve in organic HAP service for leaks once each quarter, or comply with paragraph (e)(4)(iii), (iv), or (v) of this section, except as provided in paragraph (f) of this section.

(f) *Unsafe to monitor/inspect, difficult to monitor/inspect, and inaccessible equipment.* (1) Equipment that is designated as unsafe to monitor, unsafe to inspect, difficult to monitor, difficult to inspect, or inaccessible is exempt from the monitoring requirements as specified in paragraphs (f)(1)(i) through (iv) of this section provided the owner or operator meets the requirements specified in paragraph (f)(2), (3), or (4) of this section, as applicable. All equipment must be assigned to a group of processes. Ceramic or ceramic-lined connectors are subject to the same requirements as inaccessible connectors.

(i) For pumps and agitators, paragraphs (c)(2), (3), and (4) of this section do not apply.

(ii) For valves, paragraphs (e)(2) through (7) of this section do not apply.

(iii) For connectors, §63.174(b) through (e) and paragraphs (b)(4)(iii)(B) through (F) of this section do not apply.

(iv) For closed-vent systems, §63.172(f)(1) and (2) and §63.172(g) do not apply.

(2) *Equipment that is unsafe to monitor or unsafe to inspect.* (i) Valves, connectors, agitators, and pumps may be designated as unsafe to monitor if the owner or operator determines that monitoring personnel would be exposed to an immediate danger as a consequence of complying with the monitoring requirements referred to in paragraphs (f)(1)(i) through (iii) of this section.

(ii) Any part of a closed-vent system may be designated as unsafe to inspect if the owner or operator determines that monitoring personnel would be exposed to an immediate danger as a consequence of complying with the monitoring requirements referred to in paragraph (f)(1)(iv) of this section.

(iii) The owner or operator of equipment that is designated as unsafe to monitor must have a written plan that requires monitoring of the equipment as frequently as practicable during safe to monitor times, but not more frequently than the periodic monitoring schedule otherwise applicable to the group of processes in which the equipment is located.

(iv) For any parts of a closed-vent system designated as unsafe to inspect, the owner or operator must have a written plan that requires inspection of the closed-vent systems as frequently as practicable during safe to inspect times, but not more frequently than annually.

(3) *Equipment that is difficult to monitor or difficult to inspect.* (i) A valve, agitator, or pump may be designated as difficult to monitor if the owner or operator determines that the valve, agitator, or pump cannot be monitored without elevating the monitoring personnel more than 2 meters above a support surface, or it is not accessible in a safe manner when it is in organic HAP service.

(ii) Any part of a closed-vent system may be designated as difficult to inspect if the owner or operator determines that the equipment cannot be inspected without elevating the monitoring personnel more than 2 meters above a support surface, or it is not accessible in a safe manner when it is in organic HAP service.

(iii) At an existing source, any valve, agitator or pump within a group of processes that meets the criteria of paragraph (f)(3)(i) of this section may be designated as difficult to monitor, and any parts of a closed-vent system that meet the requirements of paragraph (f)(3)(ii) of this section may be designated as difficult to inspect. At a new affected source, an owner or operator may designate no more than 3 percent of valves as difficult to monitor.

(iv) The owner or operator of valves, agitators, or pumps designated as difficult to monitor must have a written plan that requires monitoring of the equipment at least once per calendar year or on the periodic monitoring schedule otherwise applicable to the group of processes in which the equipment is located, whichever is less frequent. For any part of a closed-vent system designated as difficult to inspect, the owner or operator must have a written plan that requires inspection of the closed-vent system at least once every 5 years.

(4) *Inaccessible, ceramic, or ceramic-lined connectors.* (i) A connector may be designated as inaccessible if it is:

(A) Buried;

(B) Insulated in a manner that prevents access to the connector by a monitor probe;

(C) Obstructed by equipment or piping that prevents access to the connector by a monitor probe;

(D) Unable to be reached from a wheeled scissor-lift or hydraulic-type scaffold which would allow access to equipment up to 7.6 meters (25 feet) above the ground; or

(E) Not able to be accessed at any time in a safe manner to perform monitoring. Unsafe access includes, but is not limited to, the use of a wheeled scissor-lift on unstable or uneven terrain, the use of a motorized man-lift basket in areas where an ignition potential exists, or access would require near proximity to hazards such as electrical lines, or would risk damage to equipment.

(ii) A connector may be designated as inaccessible if it would require elevating the monitoring personnel more than 2 meters above a permanent support surface or would require the erection of scaffold.

(iii) At an existing source, any connector that meets the criteria of paragraph (f)(4)(i) or (ii) of this section may be designated as inaccessible. At a new affected source, an owner or operator may designate no more than 3 percent of connectors as inaccessible.

(iv) If any inaccessible, ceramic, or ceramic-lined connector is observed by visual, audible, olfactory, or other means to be leaking, the leak shall be repaired as soon as practicable, but no later than 15 calendar days after the leak is detected, except as provided in paragraph (b)(4)(i) of this section.

(v) Any connector that is inaccessible or that is ceramic or ceramic-lined is exempt from the recordkeeping and reporting requirements of paragraphs (g) and (h) of this section.

(g) *Recordkeeping requirements.* (1) An owner or operator of more than one group of processes subject to the provisions of this section may comply with the recordkeeping requirements for the groups of processes in one recordkeeping system if the system identifies with each record the program being implemented (e.g., quarterly monitoring) for each type of equipment. All records and information required by this section shall be maintained in a manner that can be readily accessed at the plant site. This could include physically locating the records at the plant site or accessing the records from a central location by computer at the plant site.

(2) *General recordkeeping.* Except as provided in paragraph (g)(5)(i) of this section and in paragraph (a)(9) of this section, the following information pertaining to all equipment subject to the requirements in this section shall be recorded:

(i)(A) A list of identification numbers for equipment (except connectors that are subject to paragraph (f)(4) of this section) subject to the requirements of this section. Except for equipment subject to the recordkeeping requirements in paragraphs (g)(2)(ii) through (viii) of this section, equipment need not be individually identified if, for a particular type of equipment, all items of that equipment in a designated area or length of pipe subject to the provisions of this section are identified as a group, and the number of subject items of equipment is indicated. The list for each type of equipment shall be completed no later than the completion of the initial survey required for that component. The list of identification numbers shall be updated, if needed, to incorporate equipment changes identified during the course of each monitoring period within 90 calendar days, or by the next Periodic Report, following the end of the monitoring period for the type of equipment component monitored, whichever is later.

(B) A schedule for monitoring connectors subject to the provisions of §63.174(a) and valves subject to the provisions of paragraph (e)(4) of this section.

(C) Physical tagging of the equipment to indicate that it is in organic HAP service is not required. Equipment subject to the provisions of this section may be identified on a plant site plan, in log entries, or by other appropriate methods.

(ii)(A) A list of identification numbers for equipment that the owner or operator elects to equip with a closed-vent system and control device, under the provisions of paragraph (c)(7) of this section, §63.164(h), or §63.165(c).

(B) A list of identification numbers for compressors that the owner or operator elects to designate as operating with an instrument reading of less than 500 parts per million above background, under the provisions of §63.164(i).

(iii)(A) A list of identification numbers for pressure relief devices subject to the provisions in §63.165(a).

(B) A list of identification numbers for pressure relief devices equipped with rupture disks, under the provisions of §63.165(d).

(iv) Identification of instrumentation systems subject to the provisions of this section. Individual components in an instrumentation system need not be identified.

(v) The following information shall be recorded for each dual mechanical seal system:

(A) Design criteria required by paragraph (c)(5)(vi)(A) of this section and §63.164(e)(2), and an explanation of the design criteria; and

(B) Any changes to these criteria and the reasons for the changes.

(vi) A list of equipment designated as unsafe to monitor/inspect or difficult to monitor/inspect under paragraph (f) of this section and a copy of the plan for monitoring or inspecting this equipment.

(vii) A list of connectors removed from and added to the process, as described in §63.174(i)(1), and documentation of the integrity of the weld for any removed connectors, as required in §63.174(j). This is not required unless the net credits for removed connectors is expected to be used.

(viii) For equipment that the owner or operator elects to monitor as provided under §63.178(c), a list of equipment added to batch product processes since the last monitoring period required in §63.178(c)(3)(ii) and (iii). This list must be completed for each type of equipment within 90 calendar days, or by the next Periodic Report, following the end of the monitoring period for the type of equipment monitored, whichever is later. Also, if the owner or operator elects to adjust monitoring frequency by the time in use, as provided in §63.178(c)(3)(iii), records demonstrating the proportion of the time during the calendar year the equipment is in use in a manner subject to the provisions of this section are required. Examples of suitable documentation are records of time in use for individual pieces of equipment or average time in use for the process unit.

(3) *Records of visual inspections.* For visual inspections of equipment subject to the provisions of paragraphs (c)(2)(iii) and (c)(5)(iv) of this section, the owner or operator shall document that the inspection was conducted and the date of the inspection. The owner or operator shall maintain records as specified in paragraph (g)(4) of this section for leaking equipment identified in this inspection, except as provided in paragraph (g)(5) of this section. These records shall be retained for 2 years.

(4) *Monitoring records.* When each leak is detected as specified in paragraph (c) of this section and §63.164, paragraph (e) of this section and §63.169, and §§63.172 and 63.174, the following information shall be recorded and kept for 5 years (at least 2 years onsite, with the remaining 3 years either onsite or offsite):

(i) The instrument and the equipment identification number and the operator name, initials, or identification number.

(ii) The date the leak was detected and the date of the first attempt to repair the leak.

(iii) The date of successful repair of the leak.

(iv) The maximum instrument reading measured by Method 21 of 40 CFR part 60, appendix A, after the leak is successfully repaired or determined to be nonrepairable.

(v) “Repair delayed” and the reason for the delay if a leak is not repaired within 15 calendar days after discovery of the leak.

(A) The owner or operator may develop a written procedure that identifies the conditions that justify a delay of repair. The written procedures shall be included either as part of the startup/shutdown/malfunction plan, required by §63.1259(a)(3), or in a separate document that is maintained at the plant site. Reasons for delay of repair may be documented by citing the relevant sections of the written procedure.

(B) If delay of repair was caused by depletion of stocked parts, there must be documentation that the spare parts were sufficiently stocked onsite before depletion and the reason for depletion.

(vi) If repairs were delayed, dates of process shutdowns that occur while the equipment is unrepaired.

(vii)(A) If the alternative in §63.174(c)(1)(ii) is not in use for the monitoring period, identification, either by list, location (area or grouping), or tagging of connectors disturbed since the last monitoring period required in §63.174(b), as described in §63.174(c)(1).

(B) The date and results of follow-up monitoring as required in §63.174(c)(1)(i) and (c)(2)(ii). If identification of disturbed connectors is made by location, then all connectors within the designated location shall be monitored.

(viii) The date and results of the monitoring required in §63.178(c)(3)(i) for equipment added to a batch process since the last monitoring period required in §63.178(c)(3)(ii) and (iii). If no leaking equipment is found in this monitoring, the owner or operator shall record that the inspection was performed. Records of the actual monitoring results are not required.

(ix) Copies of the periodic reports as specified in paragraph (h)(3) of this section, if records are not maintained on a computerized data base capable of generating summary reports from the records.

(5) *Records of pressure tests.* The owner or operator who elects to pressure test a process equipment train or supply lines between storage and processing areas to demonstrate compliance with this section is exempt from the requirements of paragraphs (g)(2), (3), (4), and (6) of this section. Instead, the owner or operator shall maintain records of the following information:

(i) The identification of each product, or product code, produced during the calendar year. It is not necessary to identify individual items of equipment in the process equipment train.

(ii) Physical tagging of the equipment to identify that it is in organic HAP service and subject to the provisions of this section is not required. Equipment in a process subject to the provisions of this section may be identified on a plant site plan, in log entries, or by other appropriate methods.

(iii) The dates of each pressure test required in §63.178(b), the test pressure, and the pressure drop observed during the test.

(iv) Records of any visible, audible, or olfactory evidence of fluid loss.

(v) When a process equipment train does not pass two consecutive pressure tests, the following information shall be recorded in a log and kept for 2 years:

(A) The date of each pressure test and the date of each leak repair attempt.

(B) Repair methods applied in each attempt to repair the leak.

(C) The reason for the delay of repair.

(D) The expected date for delivery of the replacement equipment and the actual date of delivery of the replacement equipment.

(E) The date of successful repair.

(6) *Records of compressor and relief device compliance tests.* The dates and results of each compliance test required for compressors subject to the provisions in §63.164(i) and the dates and results of the monitoring following a pressure release for each pressure relief device subject to the provisions in §§63.165(a) and (b). The results shall include:

(i) The background level measured during each compliance test.

(ii) The maximum instrument reading measured at each piece of equipment during each compliance test.

(7) *Records for closed-vent systems.* The owner or operator shall maintain records of the information specified in paragraphs (g)(7)(i) through (iii) of this section for closed-vent systems and control devices subject to the provisions of paragraph (b)(4)(ii) of this section. The records specified in paragraph (g)(7)(i) of this section shall be retained for the life of the equipment. The records specified in paragraphs (g)(7)(ii) and (g)(7)(iii) of this section shall be retained for 2 years.

(i) The design specifications and performance demonstrations specified in paragraphs (g)(7)(i)(A) through (g)(7)(i)(D) of this section.

(A) Detailed schematics, design specifications of the control device, and piping and instrumentation diagrams.

(B) The dates and descriptions of any changes in the design specifications.

(C) The flare design (i.e., steam assisted, air assisted, or nonassisted) and the results of the compliance demonstration required by §63.11(b).

(D) A description of the parameter or parameters monitored, as required in paragraph (b)(4)(ii) of this section, to ensure that control devices are operated and maintained in conformance with their design and an explanation of why that parameter (or parameters) was selected for the monitoring.

(ii) Records of operation of closed-vent systems and control devices.

(A) Dates and durations when the closed-vent systems and control devices required in paragraph (c) of this section and §§63.164 through 63.166 are not operated as designed as indicated by the monitored parameters, including periods when a flare pilot light system does not have a flame.

(B) Dates and durations during which the monitoring system or monitoring device is inoperative.

(C) Dates and durations of startups and shutdowns of control devices required in paragraph (c)(7) of this section and §§63.164 through 63.166.

(iii) Records of inspections of closed-vent systems subject to the provisions of §63.172.

(A) For each inspection conducted in accordance with the provisions of §63.172(f)(1) or (f)(2) during which no leaks were detected, a record that the inspection was performed, the date of the inspection, and a statement that no leaks were detected.

(B) For each inspection conducted in accordance with the provisions of §63.172(f)(1) or (f)(2) during which leaks were detected, the information specified in paragraph (g)(4) of this section shall be recorded.

(8) *Records for components in heavy liquid service.* Information, data, and analysis used to determine that a piece of equipment or process is in heavy liquid service shall be recorded. Such a determination shall include an analysis or demonstration that the process fluids do not meet the criteria of “in light liquid or gas service.” Examples of information that could document this include, but are not limited to, records of chemicals purchased for the process, analyses of process stream composition, engineering calculations, or process knowledge.

(9) *Records of exempt components.* Identification, either by list, location (area or group) of equipment in organic HAP service less than 300 hours per year subject to the provisions of this section.

(10) *Records of alternative means of compliance determination.* Owners and operators choosing to comply with the requirements of §63.179 shall maintain the following records:

(i) Identification of the process(es) and the organic HAP they handle.

(ii) A schematic of the process, enclosure, and closed-vent system.

(iii) A description of the system used to create a negative pressure in the enclosure to ensure that all emissions are routed to the control device.

(h) *Reporting requirements.* (1) Each owner or operator of a source subject to this section shall submit the reports listed in paragraphs (h)(1)(i) through (ii) of this section.

(i) A Notification of Compliance Status Report described in paragraph (h)(2) of this section,

(ii) Periodic reports described in paragraph (h)(3) of this section.

(2) *Notification of compliance status report.* Each owner or operator of a source subject to this section shall submit the information specified in paragraphs (h)(2)(i) through (iii) of this section in the Notification of Compliance Status Report described in §63.1260(f).

(i) The notification shall provide the information listed in paragraphs (h)(2)(i)(A) through (C) of this section for each process subject to the requirements of paragraphs (b) through (g) of this section.

(A) Process group identification.

(B) Number of each equipment type (e.g., valves, pumps) in organic HAP service, excluding equipment in vacuum service.

(C) Method of compliance with the standard (for example, “monthly leak detection and repair” or “equipped with dual mechanical seals”).

(ii) The notification shall provide the information listed in paragraphs (h)(2)(ii)(A) and (B) of this section for each process subject to the requirements of paragraph (b)(4)(iv) of this section and §63.178(b).

(A) Products or product codes subject to the provisions of this section, and

(B) Planned schedule for pressure testing when equipment is configured for production of products subject to the provisions of this section.

(iii) The notification shall provide the information listed in paragraphs (h)(2)(iii)(A) and (B) of this section for each process subject to the requirements in §63.179.

(A) Process identification.

(B) A description of the system used to create a negative pressure in the enclosure and the control device used to comply with the requirements of paragraph (b)(4)(ii) of this section.

(iv) Section 63.9(j) shall not apply to the Notification of Compliance Status report described in this paragraph (h)(2).

(3) *Periodic reports.* The owner or operator of a source subject to this section shall submit Periodic Reports.

(i) A report containing the information in paragraphs (h)(3)(ii), (iii), and (iv) of this section shall be submitted semiannually. The first report shall be submitted no later than 240 days after the Notification of Compliance Status Report is due and shall cover the 6-month period beginning on the date the Notification of Compliance Status Report is due. Each subsequent report shall cover the 6-month period following the preceding period.

(ii) For equipment complying with the provisions of paragraphs (b) through (g) of this section, except paragraph (b)(4)(iv) of this section and §63.179, the summary information listed in paragraphs (h)(3)(ii)(A) through (L) of this section for each monitoring period during the 6-month period.

(A) The number of valves for which leaks were detected as described in paragraph (e)(3) of this section, the percent leakers, and the total number of valves monitored;

(B) The number of valves for which leaks were not repaired as required in paragraph (e)(7) of this section, identifying the number of those that are determined nonrepairable;

(C) Separately, the number of pumps and agitators for which leaks were detected as described in paragraph (c)(2) of this section, the total number of pumps and agitators monitored, and, for pumps, the percent leakers;

(D) Separately, the number of pumps and agitators for which leaks were not repaired as required in paragraph (c)(3) of this section;

(E) The number of compressors for which leaks were detected as described in §63.164(f);

(F) The number of compressors for which leaks were not repaired as required in §63.164(g);

(G) The number of connectors for which leaks were detected as described in §63.174(a), the percent of connectors leaking, and the total number of connectors monitored;

(H) The number of connectors for which leaks were not repaired as required in §63.174(d), identifying the number of those that are determined nonrepairable;

(I) The facts that explain any delay of repairs and, where appropriate, why a process shutdown was technically infeasible.

(J) The results of all monitoring to show compliance with §§63.164(i), 63.165(a), and 63.172(f) conducted within the semiannual reporting period.

(K) If applicable, the initiation of a monthly monitoring program under either paragraph (c)(4)(ii) or paragraph (e)(4)(i) of this section.

(L) If applicable, notification of a change in connector monitoring alternatives as described in §63.174(c)(1).

(iii) For owners or operators electing to meet the requirements of §63.178(b), the report shall include the information listed in paragraphs (h)(3)(iii)(A) through (E) of this paragraph for each process.

(A) Product process equipment train identification;

(B) The number of pressure tests conducted;

(C) The number of pressure tests where the equipment train failed either the retest or two consecutive pressure tests;

(D) The facts that explain any delay of repairs; and

(E) The results of all monitoring to determine compliance with §63.172(f) of subpart H.

(iv) Any revisions to items reported in earlier Notification of Compliance Status report, if the method of compliance has changed since the last report.

[63 FR 50326, Sept. 21, 1998, as amended at 65 FR 52603, Aug. 29, 2000; 66 FR 40132, Aug. 2, 2001]

§ 63.1256 Standards: Wastewater.

(a) *General.* Each owner or operator of any affected source (existing or new) shall comply with the general wastewater requirements in paragraphs (a)(1) through (3) of this section and the maintenance wastewater provisions in paragraph (a)(4) of this section. An owner or operator may transfer wastewater to a treatment operation not owned by the owner or operator in accordance with paragraph (a)(5) of this section.

(1) *Identify wastewater that requires control.* For each POD, the owner or operator shall comply with the requirements in either paragraph (a)(1)(i) or (ii) of this section to determine whether a wastewater stream is an affected wastewater stream that requires control for soluble and/or partially soluble HAP compounds or to designate the wastewater stream as an affected wastewater stream, respectively. The owner or operator may use a combination of the approaches in paragraphs (a)(1)(i) and (ii) of this section for different affected wastewater generated at the source.

(i) *Determine characteristics of a wastewater stream.* At new and existing sources, a wastewater stream is an affected wastewater stream if the annual average concentration and annual load exceed any of the criteria specified in paragraph (a)(1)(i)(A) through (C) of this section. At new sources, a wastewater stream is subject to additional control requirements if the annual average concentration and annual load exceed the criteria specified in paragraphs (a)(1)(i)(D) of this section. The owner or operator shall comply with the provisions of §63.1257(e)(1) to determine the annual average concentrations and annual load of partially soluble and soluble HAP compounds.

(A) The wastewater stream contains partially soluble HAP compounds at an annual average concentration greater than 1,300 ppmw, and the total soluble and partially soluble HAP load in all wastewater from the PMPU exceeds 0.25 Mg/yr.

(B) The wastewater stream contains partially soluble and/or soluble HAP compounds at an annual average concentration greater than 5,200 ppmw, and the total soluble and partially soluble HAP load in all wastewater from the PMPU exceeds 0.25 Mg/yr.

(C) The wastewater stream contains partially soluble and/or soluble HAP at an annual average concentration of greater than 10,000 ppmw, and the total partially soluble and/or soluble HAP load in all wastewater from the affected source is greater than 1 Mg/yr.

(D) The wastewater stream contains soluble HAP compounds at an annual average concentration greater than 110,000 ppmw, and the total soluble and partially soluble HAP load in all wastewater from the PMPU exceeds 1 Mg/yr.

(ii) *Designate wastewater as affected wastewater.* For existing sources, the owner or operator may elect to designate wastewater streams as meeting the criteria of either paragraphs (a)(1)(i)(A),(B), or (C) of this section. For new sources, the owner or operator may elect to designate wastewater streams meeting the criterion in paragraph (a)(1)(i)(D) or for wastewater known to contain no soluble HAP, as meeting the criterion in paragraph (a)(1)(i)(A) of this section. For designated wastewater the procedures specified in paragraphs (a)(1)(ii)(A) and (B) of this section shall be followed, except as specified in paragraphs (g)(8)(i), (g)(9)(i), and (g)(10) of this section. The owner or operator is not required to determine the annual average concentration or load for each designated wastewater stream for the purposes of this section.

(A) From the POD for the wastewater stream that is designated as an affected wastewater stream to the location where the owner or operator elects to designate such wastewater stream as an affected wastewater stream, the owner or operator shall comply with all applicable emission suppression requirements specified in paragraphs (b) through (f) of this section.

(B) From the location where the owner or operator designates a wastewater stream as an affected wastewater stream, such wastewater stream shall be managed in accordance with all applicable emission suppression

requirements specified in paragraphs (b) through (f) of this section and with the treatment requirements in paragraph (g) of this section.

(iii) *Scrubber effluent.* Effluent from a water scrubber that has been used to control Table 2 HAP-containing vent streams that are controlled in order to meet the process vent requirements in §63.1254 of this subpart is considered an affected wastewater stream.

(2) *Requirements for affected wastewater.* (i) An owner or operator of a facility shall comply with the applicable requirements for wastewater tanks, surface impoundments, containers, individual drain systems, and oil/water separators as specified in paragraphs (b) through (f) of this section, except as provided in paragraph (g)(3) of this section.

(ii) Comply with the applicable requirements for control of soluble and partially soluble compounds as specified in paragraph (g) of this section. Alternatively, the owner or operator may elect to comply with the treatment provisions specified in paragraph (a)(5) of this section.

(iii) Comply with the applicable monitoring and inspection requirements specified in §63.1258.

(iv) Comply with the applicable recordkeeping and reporting requirements specified in §§63.1259 and 63.1260.

(3) *Requirements for multiphase discharges.* The owner or operator shall not discharge a separate phase that can be isolated through gravity separation from the aqueous phase to a waste management or treatment unit, unless the stream is discharged to a treatment unit in compliance with paragraph (g)(13) of this section.

(4) *Maintenance wastewater requirements.* Each owner or operator of a source subject to this subpart shall comply with the requirements of paragraphs (a)(4)(i) through (iv) of this section for maintenance wastewater containing partially soluble or soluble HAP listed in Tables 2 and 3 of this subpart. Maintenance wastewater is exempt from all other provisions of this subpart.

(i) The owner or operator shall prepare a description of maintenance procedures for management of wastewater generated from the emptying and purging of equipment in the process during temporary shutdowns for inspections, maintenance, and repair (i.e., a maintenance turnaround) and during periods which are not shutdowns (i.e., routine maintenance). The descriptions shall:

(A) Specify the process equipment or maintenance tasks that are anticipated to create wastewater during maintenance activities; and

(B) Specify the procedures that will be followed to properly manage the wastewater and minimize organic HAP emissions to the atmosphere; and

(C) Specify the procedures to be followed when clearing materials from process equipment.

(ii) The owner or operator shall modify and update the information required by paragraph (a)(4)(i) of this section as needed following each maintenance procedure based on the actions taken and the wastewater generated in the preceding maintenance procedure.

(iii) The owner or operator shall incorporate the procedures described in paragraphs (a)(4)(i) and (ii) of this section as part of the startup, shutdown, and malfunction plan required under §63.6(e)(3).

(iv) The owner or operator shall maintain a record of the information required by paragraphs (a)(4)(i) and (ii) of this section as part of the startup, shutdown, and malfunction plan required under §63.6(e)(3).

(5) *Offsite treatment or onsite treatment not owned or operated by the source.* The owner or operator may elect to transfer affected wastewater streams or a residual removed from such affected wastewater to an onsite treatment operation not owned or operated by the owner or operator of the source generating the wastewater or residual, or to an offsite treatment operation.

(i) The owner or operator transferring the wastewater or residual shall:

(A) Comply with the provisions specified in paragraphs (b) through (f) of this section for each waste management unit that receives or manages affected wastewater or a residual removed from affected wastewater prior to shipment or transport.

(B) Include a notice with each shipment or transport of affected wastewater or residual removed from affected wastewater. The notice shall state that the affected wastewater or residual contains organic HAP that are to be treated in accordance with the provisions of this subpart. When the transport is continuous or ongoing (for example, discharge to a publicly-owned treatment works), the notice shall be submitted to the treatment operator initially and whenever there is a change in the required treatment. The owner or operator shall keep a record of the notice in accordance with §63.1259(g).

(ii) The owner or operator may not transfer the affected wastewater or residual unless the transferee has submitted to the EPA a written certification that the transferee will manage and treat any affected wastewater or residual removed from affected wastewater received from a source subject to the requirements of this subpart in accordance with the requirements of either:

(A) Paragraphs (b) through (i) of this section; or

(B) Subpart D of this part if alternative emission limitations have been granted the transferor in accordance with those provisions; or

(C) Section 63.6(g); or

(D) If the affected wastewater streams or residuals removed from affected wastewater streams received by the transferee contain less than 50 ppmw of partially soluble HAP, then the transferee must, at a minimum, manage and treat the affected wastewater streams and residuals in accordance with one of the following:

(*1*) Comply with paragraph (g)(10) of this section and cover the waste management units up to the activated sludge unit; or

(*2*) Comply with paragraphs (g)(11)(i), (ii), and (h) of this section and cover the waste management units up to the activated sludge unit; or

(*3*) Comply with paragraph (g)(10) of this section provided that the owner or operator of the affected source demonstrates that less than 5 percent of the total soluble HAP is emitted from waste management units up to the activated sludge unit; or

(*4*) Comply with paragraphs (g)(11)(i), (ii), and (h) of this section provided that the owner or operator of the affected source demonstrates that less than 5 percent of the total soluble HAP is emitted from waste management units up to the activated sludge unit.

(iii) The certifying entity may revoke the written certification by sending a written statement to the EPA and the owner or operator giving at least 90 days notice that the certifying entity is rescinding acceptance of responsibility for compliance with the regulatory provisions listed in this paragraph. Upon expiration of the notice period, the owner or operator may not transfer the wastewater stream or residual to the treatment operation.

(iv) By providing this written certification to the EPA, the certifying entity accepts responsibility for compliance with the regulatory provisions listed in paragraph (a)(5)(ii) of this section with respect to any shipment of wastewater or residual covered by the written certification. Failure to abide by any of those provisions with respect to such shipments may result in enforcement action by the EPA against the certifying entity in accordance with the enforcement provisions applicable to violations of these provisions by owners or operators of sources.

(v) Written certifications and revocation statements, to the EPA from the transferees of wastewater or residuals shall be signed by the responsible official of the certifying entity, provide the name and address of the certifying entity, and

be sent to the appropriate EPA Regional Office at the addresses listed in §63.13. Such written certifications are not transferable by the treater.

(b) *Wastewater tanks.* For each wastewater tank that receives, manages, or treats affected wastewater or a residual removed from affected wastewater, the owner or operator shall comply with the requirements of either paragraph (b)(1) or (2) of this section as specified in Table 6 of this subpart.

(1) The owner or operator shall operate and maintain a fixed roof except when the contents of the wastewater tank are heated, treated by means of an exothermic reaction, or sparged, during which time the owner or operator shall comply with the requirements specified in paragraph (b)(2) of this section. For the purposes of this paragraph, the requirements of paragraph (b)(2) of this section are satisfied by operating and maintaining a fixed roof if the owner or operator demonstrates that the total soluble and partially soluble HAP emissions from the wastewater tank are no more than 5 percent higher than the emissions would be if the contents of the wastewater tank were not heated, treated by an exothermic reaction, or sparged.

(2) The owner or operator shall comply with the requirements in paragraphs (b)(3) through (9) of this section and shall operate and maintain one of the emission control techniques listed in paragraphs (b)(2)(i) through (iii) of this section.

(i) A fixed roof and a closed-vent system that routes the organic HAP vapors vented from the wastewater tank to a control device; or

(ii) A fixed roof and an internal floating roof that meets the requirements specified in §63.119(b), with the differences noted in §63.1257(c)(3)(i) through (iii) for the purposes of this subpart; or

(iii) An external floating roof that meets the requirements specified in §§63.119(c), 63.120(b)(5), and 63.120(b)(6), with the differences noted in §63.1257(c)(3)(i) through (v) for the purposes of this subpart.

(3) If the owner or operator elects to comply with the requirements of paragraph (b)(2)(i) of this section, the fixed roof shall meet the requirements of paragraph (b)(3)(i) of this section, the control device shall meet the requirements of paragraph (b)(3)(ii) of this section, and the closed-vent system shall meet the requirements of paragraph (b)(3)(iii) of this section.

(i) The fixed roof shall meet the following requirements:

(A) Except as provided in paragraph (b)(3)(iv) of this section, the fixed roof and all openings (e.g., access hatches, sampling ports, and gauge wells) shall be maintained in accordance with the requirements specified in §63.1258(h).

(B) Each opening shall be maintained in a closed position (e.g., covered by a lid) at all times that the wastewater tank contains affected wastewater or residual removed from affected wastewater except when it is necessary to use the opening for wastewater sampling, removal, or for equipment inspection, maintenance, or repair.

(ii) The control device shall be designed, operated, and inspected in accordance with the requirements of paragraph (h) of this section.

(iii) Except as provided in paragraph (b)(3)(iv) of this section, the closed-vent system shall be inspected in accordance with the requirements of §63.1258(h).

(iv) For any fixed roof tank and closed-vent system that is operated and maintained under negative pressure, the owner or operator is not required to comply with the requirements specified in §63.1258(h).

(4) If the owner or operator elects to comply with the requirements of paragraph (b)(2)(ii) of this section, the floating roof shall be inspected according to the procedures specified in §63.120(a)(2) and (3), with the differences noted in §63.1257(c)(3)(iv) for the purposes of this subpart.

(5) Except as provided in paragraph (b)(6) of this section, if the owner or operator elects to comply with the requirements of paragraph (b)(2)(iii) of this section, seal gaps shall be measured according to the procedures

specified in §63.120(b)(2)(i) through (b)(4) and the wastewater tank shall be inspected to determine compliance with §63.120(b)(5) and (6) according to the schedule specified in §63.120(b)(1)(i) through (iii).

(6) If the owner or operator determines that it is unsafe to perform the seal gap measurements specified in §63.120(b)(2)(i) through (b)(4) or to inspect the wastewater tank to determine compliance with §63.120(b)(5) and (6) because the floating roof appears to be structurally unsound and poses an imminent or potential danger to inspecting personnel, the owner or operator shall comply with the requirements in either paragraph (b)(6)(i) or (ii) of this section.

(i) The owner or operator shall measure the seal gaps or inspect the wastewater tank within 30 calendar days of the determination that the floating roof is unsafe.

(ii) The owner or operator shall empty and remove the wastewater tank from service within 45 calendar days of determining that the roof is unsafe. If the wastewater tank cannot be emptied within 45 calendar days, the owner or operator may utilize up to two extensions of up to 30 additional calendar days each. Documentation of a decision to utilize an extension shall include an explanation of why it was unsafe to perform the inspection or seal gap measurement, shall document that alternate storage capacity is unavailable, and shall specify a schedule of actions that will ensure that the wastewater tank will be emptied as soon as possible.

(7) Except as provided in paragraph (b)(6) of this section, each wastewater tank shall be inspected initially, and semiannually thereafter, for improper work practices in accordance with §63.1258(g). For wastewater tanks, improper work practice includes, but is not limited to, leaving open any access door or other opening when such door or opening is not in use.

(8) Except as provided in paragraph (b)(6) of this section, each wastewater tank shall be inspected for control equipment failures as defined in paragraph (b)(8)(i) of this section according to the schedule in paragraphs (b)(8)(ii) and (iii) of this section in accordance with §63.1258(g).

(i) Control equipment failures for wastewater tanks include, but are not limited to, the conditions specified in paragraphs (b)(8)(i)(A) through (I) of this section.

(A) The floating roof is not resting on either the surface of the liquid or on the leg supports.

(B) There is stored liquid on the floating roof.

(C) A rim seal is detached from the floating roof.

(D) There are holes, tears, cracks or gaps in the rim seal or seal fabric of the floating roof.

(E) There are visible gaps between the seal of an internal floating roof and the wall of the wastewater tank.

(F) There are gaps between the metallic shoe seal or the liquid mounted primary seal of an external floating roof and the wall of the wastewater tank that exceed 212 square centimeters per meter of tank diameter or the width of any portion of any gap between the primary seal and the tank wall exceeds 3.81 centimeters.

(G) There are gaps between the secondary seal of an external floating roof and the wall of the wastewater tank that exceed 21.2 square centimeters per meter of tank diameter or the width of any portion of any gap between the secondary seal and the tank wall exceeds 1.27 centimeters.

(H) Where a metallic shoe seal is used on an external floating roof, one end of the metallic shoe does not extend into the stored liquid or one end of the metallic shoe does not extend a minimum vertical distance of 61 centimeters above the surface of the stored liquid.

(I) A gasket, joint, lid, cover, or door has a crack or gap, or is broken.

(ii) The owner or operator shall inspect for the control equipment failures in paragraphs (b)(8)(i)(A) through (H) according to the schedule specified in paragraphs (b)(4) and (5) of this section.

(iii) The owner or operator shall inspect for the control equipment failures in paragraph (b)(8)(i)(I) of this section initially, and semiannually thereafter.

(9) Except as provided in paragraph (i) of this section, when an improper work practice or a control equipment failure is identified, first efforts at repair shall be made no later than 5 calendar days after identification and repair shall be completed within 45 calendar days after identification. If a failure that is detected during inspections required by this section cannot be repaired within 45 calendar days and if the tank cannot be emptied within 45 calendar days, the owner or operator may utilize up to two extensions of up to 30 additional calendar days each. Documentation of a decision to utilize an extension shall include a description of the failure, shall document that alternate storage capacity is unavailable, and shall specify a schedule of actions that will ensure that the control equipment will be repaired or the tank will be emptied as soon as practical.

(10) The emission limits specified in §63.1256 (b)(2) and (h) for control devices used to control emissions from wastewater tanks do not apply during periods of planned routine maintenance of the control device(s) of no more than 240 hours in any 365-day period. The owner or operator may submit an application to the Administrator requesting an extension of this time limit to a total of 360 hours in any 365-day period. The application must explain why the extension is needed, it must specify that no affected wastewater will be added to the tank between the time the 240-hour limit is exceeded and the control device is again operational, and it must be submitted at least 60 days before the 240-hour limit will be exceeded. Wastewater tanks shall not be sparged with air or other gases without an operational control device.

(c) *Surface impoundments.* For each surface impoundment that receives, manages, or treats affected wastewater or a residual removed from affected wastewater, the owner or operator shall comply with the requirements of paragraphs (c)(1), (2), and (3) of this section.

(1) The owner or operator shall operate and maintain on each surface impoundment either a cover (e.g., air-supported structure or rigid cover) and a closed-vent system that routes the organic hazardous air pollutants vapors vented from the surface impoundment to a control device in accordance with paragraphs (c)(1)(i), (iii), (iv), and (v) of this section, or a floating flexible membrane cover as specified in paragraph (c)(1)(ii) of this section.

(i) The cover and all openings shall meet the following requirements:

(A) Except as provided in paragraph (c)(1)(v) of this section, the cover and all openings (e.g., access hatches, sampling ports, and gauge wells) shall be maintained in accordance with the requirements specified in §63.1258(h).

(B) Each opening shall be maintained in a closed position (e.g., covered by a lid) at all times that affected wastewater or residual removed from affected wastewater is in the surface impoundment except when it is necessary to use the opening for sampling, removal, or for equipment inspection, maintenance, or repair.

(C) The cover shall be used at all times that affected wastewater or residual removed from affected wastewater is in the surface impoundment except during removal of treatment residuals in accordance with 40 CFR 268.4 or closure of the surface impoundment in accordance with 40 CFR 264.228.

(ii) Floating flexible membrane covers shall meet the requirements specified in paragraphs (c)(1)(ii)(A) through (F) of this section.

(A) The floating flexible cover shall be designed to float on the liquid surface during normal operations, and to form a continuous barrier over the entire surface area of the liquid.

(B) The cover shall be fabricated from a synthetic membrane material that is either:

(*1*) High density polyethylene (HDPE) with a thickness no less than 2.5 millimeters (100 mils); or

(*2*) A material or a composite of different materials determined to have both organic permeability properties that are equivalent to those of the material listed in paragraph (c)(1)(ii)(B)(*1*) of this section, and chemical and physical properties that maintain the material integrity for the intended service life of the material.

(C) The cover shall be installed in a manner such that there are no visible cracks, holes, gaps, or other open spaces between cover section seams or between the interface of the cover edge and its foundation mountings.

(D) Except as provided for in paragraph (c)(1)(ii)(E) of this section, each opening in the floating membrane cover shall be equipped with a closure device designed to operate such that when the closure device is secured in the closed position there are no visible cracks, holes, gaps, or other open spaces in the closure device or between the perimeter of the cover opening and the closure device.

(E) The floating membrane cover may be equipped with one or more emergency cover drains for removal of stormwater. Each emergency cover drain shall be equipped with a slotted membrane fabric cover that covers at least 90 percent of the area of the opening or a flexible fabric sleeve seal.

(F) The closure devices shall be made of suitable materials that will minimize exposure of organic HAP to the atmosphere, to the extent practical, and will maintain the integrity of the equipment throughout its intended service life. Factors to be considered in designing the closure devices shall include: the effects of any contact with the liquid and its vapor managed in the surface impoundment; the effects of outdoor exposure to wind, moisture, and sunlight; and the operating practices used for the surface impoundment on which the floating membrane cover is installed.

(G) Whenever affected wastewater or residual from affected wastewater is in the surface impoundment, the floating membrane cover shall float on the liquid and each closure device shall be secured in the closed position. Opening of closure devices or removal of the cover is allowed to provide access to the surface impoundment for performing routine inspection, maintenance, or other activities needed for normal operations and/or to remove accumulated sludge or other residues from the bottom of surface impoundment. Openings shall be maintained in accordance with §63.1258(h).

(iii) The control device shall be designed, operated, and inspected in accordance with paragraph (h) of this section.

(iv) Except as provided in paragraph (c)(1)(v) of this section, the closed-vent system shall be inspected in accordance with §63.1258(h).

(v) For any cover and closed-vent system that is operated and maintained under negative pressure, the owner or operator is not required to comply with the requirements specified in §63.1258(h).

(2) Each surface impoundment shall be inspected initially, and semiannually thereafter, for improper work practices and control equipment failures in accordance with §63.1258(g).

(i) For surface impoundments, improper work practice includes, but is not limited to, leaving open any access hatch or other opening when such hatch or opening is not in use.

(ii) For surface impoundments, control equipment failure includes, but is not limited to, any time a joint, lid, cover, or door has a crack or gap, or is broken.

(3) Except as provided in paragraph (i) of this section, when an improper work practice or a control equipment failure is identified, first efforts at repair shall be made no later than 5 calendar days after identification and repair shall be completed within 45 calendar days after identification.

(d) *Containers.* For each container that receives, manages, or treats affected wastewater or a residual removed from affected wastewater, the owner or operator shall comply with the requirements of paragraphs (d)(1) through (5) of this section.

(1) The owner or operator shall operate and maintain a cover on each container used to handle, transfer, or store affected wastewater or a residual removed from affected wastewater in accordance with the following requirements:

(i) Except as provided in paragraph (d)(3)(iv) of this section, if the capacity of the container is greater than 0.42 m^3 , the cover and all openings (e.g., bungs, hatches, sampling points, and pressure relief valves) shall be controlled in accordance with the requirements of either paragraph (d)(1)(i)(A) or (d)(1)(i)(B) of this section.

(A) The requirements specified in §63.1258(h); or

(B) The requirements of subpart PP of this part for containers using level 2 controls that meet the definitions in §63.923(b)(1) or (2).

(ii) If the capacity of the container is less than or equal to 0.42 m^3 , the owner or operator shall comply with either paragraph (d)(1)(ii)(A) or (B) of this section.

(A) The container must meet existing Department of Transportation specifications and testing requirements under 49 CFR part 178; or

(B) Except as provided in paragraph (d)(3)(iv) of this section, the cover and all openings shall be maintained without leaks as specified in §63.1258(h).

(iii) The cover and all openings shall be maintained in a closed position (e.g., covered by a lid) at all times that affected wastewater or a residual removed from affected wastewater is in the container except when it is necessary to use the opening for filling, removal, inspection, sampling, or pressure relief events related to safety considerations.

(2) *Filling of large containers.* Pumping affected wastewater or a residual removed from affected wastewater into a container with a capacity greater than or equal to 0.42 m^3 shall be conducted in accordance with the conditions in paragraphs (d)(2)(i) and (ii) of this section.

(i) Comply with any one of the procedures specified in paragraph (d)(2)(i)(A), (B), or (C) of this section.

(A) Use a submerged fill pipe. The submerged fill pipe outlet shall extend to no more than 6 inches or within two fill pipe diameters of the bottom of the container while the container is being filled.

(B) Locate the container within an enclosure with a closed-vent system that routes the organic HAP vapors vented from the container to a control device.

(C) Use a closed-vent system to vent the displaced organic vapors vented from the container to a control device or back to the equipment from which the wastewater is transferred.

(ii) The cover shall remain in place and all openings shall be maintained in a closed position except for those openings required for the submerged fill pipe and for venting of the container to prevent physical damage or permanent deformation of the container or cover.

(3) During treatment of affected wastewater or a residual removed from affected wastewater, including aeration, thermal or other treatment, in a container, whenever it is necessary for the container to be open, the container shall be located within an enclosure with a closed-vent system that routes the organic HAP vapors vented from the container to a control device.

(i) Except as provided in paragraph (d)(3)(iv) of this section, the enclosure and all openings (e.g., doors, hatches) shall be maintained in accordance with the requirements specified in §63.1258(h).

(ii) The control device shall be designed, operated, and inspected in accordance with paragraph (h) of this section.

(iii) Except as provided in paragraph (d)(3)(iv) of this section, the closed-vent system shall be inspected in accordance with §63.1258(h).

(iv) For any enclosure and closed-vent system that is operated and maintained under negative pressure, the owner or operator is not required to comply with the requirements specified in §63.1258(h).

(4) Each container shall be inspected initially, and semiannually thereafter, for improper work practices and control equipment failures in accordance with §63.1258(g).

(i) For containers, improper work practice includes, but is not limited to, leaving open any access hatch or other opening when such hatch or opening is not in use.

(ii) For containers, control equipment failure includes, but is not limited to, any time a cover or door has a gap or crack, or is broken.

(5) Except as provided in paragraph (i) of this section, when an improper work practice or a control equipment failure is identified, first efforts at repair shall be made no later than 5 calendar days after identification and repair shall be completed within 15 calendar days after identification.

(e) *Individual drain systems.* For each individual drain system that receives or manages affected wastewater or a residual removed from affected wastewater, the owner or operator shall comply with the requirements of paragraphs (e) (1), (2), and (3) or with paragraphs (e) (4), (5), and (6) of this section.

(1) If the owner or operator elects to comply with this paragraph, the owner or operator shall operate and maintain on each opening in the individual drain system a cover and if vented, route the vapors to a process or through a closed-vent system to a control device. The owner or operator shall comply with the requirements of paragraphs (e)(1) (i) through (v) of this section.

(i) The cover and all openings shall meet the following requirements:

(A) Except as provided in paragraph (e)(1)(iv) of this section, the cover and all openings (e.g., access hatches, sampling ports) shall be maintained in accordance with the requirements specified in §63.1258(h).

(B) The cover and all openings shall be maintained in a closed position at all times that affected wastewater or a residual removed from affected wastewater is in the drain system except when it is necessary to use the opening for sampling or removal, or for equipment inspection, maintenance, or repair.

(ii) The control device shall be designed, operated, and inspected in accordance with paragraph (h) of this section.

(iii) Except as provided in paragraph (e)(1)(iv) of this section, the closed-vent system shall be inspected in accordance with §63.1258(h).

(iv) For any cover and closed-vent system that is operated and maintained under negative pressure, the owner or operator is not required to comply with the requirements specified in §63.1258(h).

(v) The individual drain system shall be designed and operated to segregate the vapors within the system from other drain systems and the atmosphere.

(2) Each individual drain system shall be inspected initially, and semiannually thereafter, for improper work practices and control equipment failures, in accordance with §63.1258(g).

(i) For individual drain systems, improper work practice includes, but is not limited to, leaving open any access hatch or other opening when such hatch or opening is not in use for sampling or removal, or for equipment inspection, maintenance, or repair.

(ii) For individual drain systems, control equipment failure includes, but is not limited to, any time a joint, lid, cover, or door has a gap or crack, or is broken.

(3) Except as provided in paragraph (i) of this section, when an improper work practice or a control equipment failure is identified, first efforts at repair shall be made no later than 5 calendar days after identification and repair shall be completed within 15 calendar days after identification.

(4) If the owner or operator elects to comply with this paragraph, the owner or operator shall comply with the requirements in paragraphs (e)(4) (i) through (iii) of this section:

(i) Each drain shall be equipped with water seal controls or a tightly fitting cap or plug. The owner or operator shall comply with paragraphs (e)(4)(i)(A) and (B) of this section.

(A) For each drain equipped with a water seal, the owner or operator shall ensure that the water seal is maintained. For example, a flow-monitoring device indicating positive flow from a main to a branch water line supplying a trap or water being continuously dripped into the trap by a hose could be used to verify flow of water to the trap. Visual observation is also an acceptable alternative.

(B) If a water seal is used on a drain receiving affected wastewater, the owner or operator shall either extend the pipe discharging the wastewater below the liquid surface in the water seal of the receiving drain, or install a flexible shield (or other enclosure which restricts wind motion across the open area between the pipe and the drain) that encloses the space between the pipe discharging the wastewater to the drain receiving the wastewater. (Water seals which are used on hubs receiving wastewater that is not subject to the provisions of this subpart for the purpose of eliminating cross ventilation to drains carrying affected wastewater are not required to have a flexible shield or extended subsurface discharging pipe.)

(ii) Each junction box shall be equipped with a tightly fitting solid cover (i.e., no visible gaps, cracks, or holes) which shall be kept in place at all times except during inspection and maintenance. If the junction box is vented, the owner or operator shall comply with the requirements in paragraph (e)(4)(ii) (A) or (B) of this section.

(A) The junction box shall be vented to a process or through a closed-vent system to a control device. The closed-vent system shall be inspected in accordance with the requirements of §63.1258(h) and the control device shall be designed, operated, and inspected in accordance with the requirements of paragraph (h) of this section.

(B) If the junction box is filled and emptied by gravity flow (i.e., there is no pump) or is operated with no more than slight fluctuations in the liquid level, the owner or operator may vent the junction box to the atmosphere provided that the junction box complies with the requirements in paragraphs (e)(4)(ii)(B) (*1*) and (*2*) of this section.

(*1*) The vent pipe shall be at least 90 centimeters in length and no greater than 10.2 centimeters in nominal inside diameter.

(*2*) Water seals shall be installed and maintained at the wastewater entrance(s) to or exit from the junction box restricting ventilation in the individual drain system and between components in the individual drain system. The owner or operator shall demonstrate (e.g., by visual inspection or smoke test) upon request by the Administrator that the junction box water seal is properly designed and restricts ventilation.

(iii) The owner or operator shall operate and maintain sewer lines as specified in paragraphs (e)(4)(iii)(A) and (B) of this section.

(A) Except as specified in paragraph (e)(4)(iii)(B) of this section, each sewer line shall not be open to the atmosphere and shall be covered or enclosed in a manner so as to have no visible gaps or cracks in joints, seals, or other emission interfaces.

Note: This provision applies to sewers located inside and outside of buildings.

(B) A sewer line connected to drains that are in compliance with paragraph (e)(4)(i) of this section may be vented to the atmosphere, provided that the sewer line entrance to the first downstream junction box is water sealed and the sewer line vent pipe is designed as specified in paragraph (e)(4)(ii)(B)(*1*) of this section.

(5) Equipment used to comply with paragraphs (e)(4) (i), (ii), or (iii) of this section shall be inspected as follows:

(i) Each drain using a tightly fitting cap or plug shall be visually inspected initially, and semiannually thereafter, to ensure caps or plugs are in place and that there are no gaps, cracks, or other holes in the cap or plug.

(ii) Each junction box shall be visually inspected initially, and semiannually thereafter, to ensure that there are no gaps, cracks, or other holes in the cover.

(iii) The unburied portion of each sewer line shall be visually inspected initially, and semiannually thereafter, for indication of cracks or gaps that could result in air emissions.

(6) Except as provided in paragraph (i) of this section, when a gap, hole, or crack is identified in a joint or cover, first efforts at repair shall be made no later than 5 calendar days after identification, and repair shall be completed within 15 calendar days after identification.

(f) *Oil-water separators.* For each oil-water separator that receives, manages, or treats affected wastewater or a residual removed from affected wastewater, the owner or operator shall comply with the requirements of paragraphs (f)(1) through (6) of this section.

(1) The owner or operator shall maintain one of the following:

(i) A fixed roof and a closed-vent system that routes the organic HAP vapors vented from the oil-water separator to a control device. The fixed roof, closed-vent system, and control device shall meet the requirements specified in paragraph (f)(2) of this section;

(ii) A floating roof that meets the requirements in 40 CFR 60.693–2(a)(1)(i), (a)(1)(ii), (a)(2), (a)(3), and (a)(4). For portions of the oil-water separator where it is infeasible to construct and operate a floating roof, such as over the weir mechanism, the owner or operator shall operate and maintain a fixed roof, closed-vent system, and control device that meet the requirements specified in paragraph (f)(2) of this section.

(2) A fixed roof shall meet the requirements of paragraph (f)(2)(i) of this section, a control device shall meet the requirements of paragraph (f)(2)(ii) of this section, and a closed-vent system shall meet the requirements of (f)(2)(iii) of this section.

(i) The fixed roof shall meet the following requirements:

(A) Except as provided in (f)(2)(iv) of this section, the fixed roof and all openings (e.g., access hatches, sampling ports, and gauge wells) shall be maintained in accordance with the requirements specified in §63.1258(h).

(B) Each opening shall be maintained in a closed, sealed position (e.g., covered by a lid that is gasketed and latched) at all times that the oil-water separator contains affected wastewater or a residual removed from affected wastewater except when it is necessary to use the opening for sampling or removal, or for equipment inspection, maintenance, or repair.

(ii) The control device shall be designed, operated, and inspected in accordance with the requirements of paragraph (h) of this section.

(iii) Except as provided in paragraph (f)(2)(iv) of this section, the closed-vent system shall be inspected in accordance with the requirements of §63.1258(h).

(iv) For any fixed-roof and closed-vent system that is operated and maintained under negative pressure, the owner or operator is not required to comply with the requirements of §63.1258(h).

(3) If the owner or operator elects to comply with the requirements of paragraph (f)(1)(ii) of this section, seal gaps shall be measured according to the procedures specified in 40 CFR part 60, subpart QQQ §60.696(d)(1) and the schedule specified in paragraphs (f)(3)(i) and (ii) of this section.

(i) Measurement of primary seal gaps shall be performed within 60 calendar days after installation of the floating roof and introduction of affected wastewater or a residual removed from affected wastewater and once every 5 years thereafter.

(ii) Measurement of secondary seal gaps shall be performed within 60 calendar days after installation of the floating roof and introduction of affected wastewater or a residual removed from affected wastewater and once every year thereafter.

(4) Each oil-water separator shall be inspected initially, and semiannually thereafter, for improper work practices in accordance with §63.1258(g). For oil-water separators, improper work practice includes, but is not limited to, leaving open or ungasketed any access door or other opening when such door or opening is not in use.

(5) Each oil-water separator shall be inspected for control equipment failures as defined in paragraph (f)(5)(i) of this section according to the schedule specified in paragraphs (f)(5)(ii) and (iii) of this section.

(i) For oil-water separators, control equipment failure includes, but is not limited to, the conditions specified in paragraphs (f)(5)(i)(A) through (G) of this section.

(A) The floating roof is not resting on either the surface of the liquid or on the leg supports.

(B) There is stored liquid on the floating roof.

(C) A rim seal is detached from the floating roof.

(D) There are holes, tears, or other open spaces in the rim seal or seal fabric of the floating roof.

(E) There are gaps between the primary seal and the separator wall that exceed 67 square centimeters per meter of separator wall perimeter or the width of any portion of any gap between the primary seal and the separator wall exceeds 3.8 centimeters.

(F) There are gaps between the secondary seal and the separator wall that exceed 6.7 square centimeters per meter of separator wall perimeter or the width of any portion of any gap between the secondary seal and the separator wall exceeds 1.3 centimeters.

(G) A gasket, joint, lid, cover, or door has a gap or crack, or is broken.

(ii) The owner or operator shall inspect for the control equipment failures in paragraphs (f)(5)(i)(A) through (F) according to the schedule specified in paragraph (f)(3) of this section.

(iii) The owner or operator shall inspect for control equipment failures in paragraph (f)(5)(i)(G) of this section initially, and semiannually thereafter.

(6) Except as provided in paragraph (i) of this section, when an improper work practice or a control equipment failure is identified, first efforts at repair shall be made no later than 5 calendar days after identification and repair shall be completed within 45 calendar days after identification.

(g) *Performance standards for treatment processes managing wastewater and/or residuals removed from wastewater.* This section specifies the performance standards for treating affected wastewater. The owner or operator shall comply with the requirements as specified in paragraphs (g)(1) through (6) of this section. Where multiple compliance options are provided, the options may be used in combination for different wastewater and/or for different compounds (e.g., soluble versus partially soluble compounds) in the same wastewater, except where otherwise provided in this section. Once affected wastewater or a residual removed from affected wastewater has been treated in accordance with this subpart, it is no longer subject to the requirements of this subpart.

(1) *Existing source.* For a wastewater stream at an existing source that exceeds or is designated to exceed the concentration and load criteria in paragraph (a)(1)(i)(A) of this section, the owner or operator shall comply with a control option in paragraph (g)(8) of this section. For a wastewater stream at an existing source that exceeds the concentration and load criteria in either paragraph (a)(1)(i)(B) or (C) of this section, the owner or operator shall comply with a control option in paragraph (g)(8) of this section and a control option in paragraph (g)(9) of this section. As an alternative to the control options in paragraphs (g)(8) and (g)(9) of this section, the owner or operator may comply with a control option in either paragraph (g)(10), (11) or (13) of this section, as applicable.

(2) *New source.* For a wastewater stream at a new source that exceeds or is designated to exceed the concentration and load criteria in paragraph (a)(1)(i)(A) of this section, the owner or operator shall comply with a control option in paragraph (g)(8) of this section. For wastewater at a new source that exceeds the concentration and load criteria in

either paragraph (a)(1)(i)(B) or (C) of this section, but does not exceed the criteria in paragraph (a)(1)(i)(D) of this section, the owner or operator shall comply with a control option in paragraph (g)(8) of this section and a control option in paragraph (g)(9) of this section. As an alternative to the control options in paragraphs (g)(8) and/or (9) of this section, the owner or operator may comply with a control option in either paragraph (g)(10), (11), or (13) of this section, as applicable. For a wastewater stream at a new source that exceeds or is designated to exceed the concentration and load criteria in paragraph (a)(1)(i)(D) of this section, the owner or operator shall comply with a control option in paragraph (g)(12) or (13) of this section.

(3) *Biological treatment processes.* Biological treatment processes in compliance with this section may be either open or closed biological treatment processes as defined in §63.1251. An open biological treatment process in compliance with this section need not be covered and vented to a control device. An open or a closed biological treatment process in compliance with this section and using §63.1257(e)(2)(iii)(E) or (F) to demonstrate compliance is not subject to the requirements of paragraphs (b) and (c) of this section. A closed biological treatment process in compliance with this section and using §63.1257(e)(2)(iii)(G) to demonstrate compliance shall comply with the requirements of paragraphs (b) and (c) of this section. Waste management units upstream of an open or closed biological treatment process shall meet the requirements of paragraphs (b) through (f) of this section, as applicable.

(4) *Performance tests and design evaluations.* If the Resource Conservation and Recovery Act (RCRA) option [paragraph (g)(13) of this section] or the enhanced biological treatment process for soluble HAP compounds option [paragraph (g)(10) of this section] is selected to comply with this section, neither a design evaluation nor a performance test is required. For any other nonbiological treatment process, and for closed biological treatment processes as defined in §63.1251, the owner or operator shall conduct either a design evaluation as specified in §63.1257(e)(2)(ii) or performance test as specified in §63.1257(e)(2)(iii). For each open biological treatment process as defined in §63.1251, the owner or operator shall conduct a performance test as specified in §63.1257(e)(2)(iii)(E) or (F).

(5) *Control device requirements.* When gases are vented from the treatment process, the owner or operator shall comply with the applicable control device requirements specified in paragraph (h) of this section and §63.1257(e)(3), and the applicable leak inspection provisions specified in §63.1258(h). This requirement is in addition to the requirements for treatment systems specified in paragraphs (g)(8) through (14) of this section. This requirement does not apply to any open biological treatment process that meets the mass removal requirements.

(6) *Residuals: general.* When residuals result from treating affected wastewater, the owner or operator shall comply with the requirements for residuals specified in paragraph (g)(14) of this section.

(7) *Treatment using a series of treatment processes.* In all cases where the wastewater provisions in this subpart allow or require the use of a treatment process or control device to comply with emissions limitations, the owner or operator may use multiple treatment processes or control devices, respectively. For combinations of treatment processes where the wastewater stream is conveyed by hard-piping, the owner or operator shall comply with either the requirements of paragraph (g)(7)(i) or (ii) of this section. For combinations of treatment processes where the wastewater stream is not conveyed by hard-piping, the owner or operator shall comply with the requirements of paragraph (g)(7)(ii) of this section. For combinations of control devices, the owner or operator shall comply with the requirements of paragraph (g)(7)(i) of this section.

(i) *Compliance across the combination of all treatment units or control devices in series.* (A) For combinations of treatment processes, the wastewater stream shall be conveyed by hard-piping between the treatment processes. For combinations of control devices, the vented gas stream shall be conveyed by hard-piping between the control devices.

(B) For combinations of treatment processes, each treatment process shall meet the applicable requirements of paragraphs (b) through (f) of this section, except as provided in paragraph (g)(3) of this section.

(C) The owner or operator shall identify, and keep a record of, the combination of treatment processes or of control devices, including identification of the first and last treatment process or control device. The owner or operator shall include this information as part of the treatment process description reported in the Notification of Compliance Status.

(D) The performance test or design evaluation shall determine compliance across the combination of treatment processes or control devices. If a performance test is conducted, the “inlet” shall be the point at which the wastewater stream or residual enters the first treatment process, or the vented gas stream enters the first control device. The

"outlet" shall be the point at which the treated wastewater stream exits the last treatment process, or the vented gas stream exits the last control device.

(ii) *Compliance across individual units.* (A) For combinations of treatment processes, each treatment process shall meet the applicable requirements of paragraphs (b) through (f) of this section except as provided in paragraph (g)(3) of this section.

(B) The owner or operator shall identify, and keep a record of, the combination of treatment processes, including identification of the first and last treatment process. The owner or operator shall include this information as part of the treatment process description reported in the Notification of Compliance Status report.

(C) The owner or operator shall determine the mass removed or destroyed by each treatment process. The performance test or design evaluation shall determine compliance for the combination of treatment processes by adding together the mass removed or destroyed by each treatment process and determine the overall control efficiency of the treatment system.

(8) *Control options: Wastewater containing partially soluble HAP compounds.* The owner or operator shall comply with either paragraph (g)(8)(i) or (ii) of this section for the control of partially soluble HAP compounds at new or existing sources.

(i) *50 ppmw concentration option.* The owner or operator shall comply with paragraphs (g)(8)(i)(A) and (B) of this section.

(A) Reduce, by removal or destruction, the concentration of total partially soluble HAP compounds to a level less than 50 ppmw as determined by the procedures specified in §63.1257(e)(2)(iii)(B).

(B) This option shall not be used when the treatment process is a biological treatment process. This option shall not be used when the wastewater is designated as an affected wastewater as specified in paragraph (a)(1)(ii) of this section. Dilution shall not be used to achieve compliance with this option.

(ii) *Percent mass removal/destruction option.* The owner or operator shall reduce, by removal or destruction, the mass of total partially soluble HAP compounds by 99 percent or more. The removal destruction efficiency shall be determined by the procedures specified in §63.1257(e)(2)(ii) or (iii)(C) for noncombustion, nonbiological treatment processes; §63.1257(e)(2)(ii) or (iii)(D) for combustion processes; §63.1257(e)(2)(iii)(F) for open biological treatment processes; and §63.1257(e)(2)(ii) or (iii)(G) for closed biological treatment processes.

(9) *Control options: Wastewater containing soluble HAP compounds.* The owner or operator shall comply with either paragraph (g)(9)(i) or (ii) of this section for the control of soluble HAP compounds at new or existing sources.

(i) *520 ppmw concentration option.* The owner or operator shall comply with paragraphs (g)(9)(i)(A) and (B) of this section.

(A) Reduce, by removal or destruction, the concentration of total soluble HAP compounds to a level less than 520 ppmw as determined in the procedures specified in §63.1257(e)(2)(iii)(B).

(B) This option shall not be used when the treatment process is a biological treatment process. This option shall not be used when the wastewater is designated as an affected wastewater as specified in paragraph (a)(1)(ii) of this section. Dilution shall not be used to achieve compliance with this option.

(ii) *Percent mass removal/destruction option.* The owner or operator shall reduce the mass of total soluble HAP by 90 percent or more, either by removal or destruction. The removal/destruction efficiency shall be determined by the procedures in §63.1257(e)(2)(ii) or (e)(2)(iii)(C) for noncombustion, nonbiological treatment processes; §63.1257(e)(2)(ii) or (e)(2)(iii)(D) for combustion processes; §63.1257(e)(2)(iii)(F) for open biological treatment processes; and §63.1257(e)(2)(ii) or (e)(2)(iii)(G) for closed, biological treatment processes.

(10) *Control option: Enhanced biotreatment for wastewater containing soluble HAP.* The owner or operator may elect to treat affected wastewater streams containing soluble HAP in an enhanced biological treatment system, as defined

in §63.1251, provided the wastewater stream contains less than 50 ppmw partially soluble HAP, or the owner or operator complies with the requirements of paragraph (g)(8) of this section before treating the affected wastewater stream in the enhanced biological treatment system. This option shall not be used when the wastewater is designated as an affected wastewater as specified in paragraph (a)(1)(ii) of this section. These treatment processes are exempt from the design evaluation or performance tests requirements specified in paragraph (g)(4) of this section.

(11) *95-percent mass reduction option, for biological treatment processes.* The owner or operator of a new or existing source using biological treatment for any affected wastewater shall reduce the mass of total soluble and partially soluble HAP sent to that biological treatment unit by at least 95 percent. All wastewater as defined in §63.1251 entering such a biological treatment unit from PMPU's subject to this subpart shall be included in the demonstration of the 95-percent mass removal. The owner or operator shall comply with paragraphs (g)(11)(i) through (iv) of this section.

(i) Except as provided in paragraph (g)(11)(iv) of this section, the owner or operator shall ensure that all wastewater from PMPU's subject to this subpart entering a biological treatment unit are treated to destroy at least 95-percent total mass of all soluble and partially soluble HAP compounds.

(ii) For open biological treatment processes, compliance shall be determined using the procedures specified in §63.1257(e)(2)(iii)(E). For closed aerobic biological treatment processes, compliance shall be determined using the procedures specified in §63.1257(e)(2)(ii), (iii)(E), or (iii)(G). For closed anaerobic biological treatment processes, compliance shall be determined using the procedures specified in §63.1257(e)(2)(ii) or (iii)(G).

(iii) For each treatment process or waste management unit that receives, manages, or treats wastewater subject to this paragraph, from the POD to the biological treatment unit, the owner or operator shall comply with paragraphs (b) through (f) of this section for control of air emissions. When complying with this paragraph, the term affected wastewater in paragraphs (b) through (f) of this section shall mean all wastewater from PMPU's, not just affected wastewater.

(iv) If wastewater is in compliance with the requirements in paragraph (g)(8), (9), or (12) of this section before entering the biological treatment unit, the hazardous air pollutants mass of that wastewater is not required to be included in the total mass flow rate entering the biological treatment unit for the purpose of demonstrating compliance.

(12) *Percent mass removal/destruction option for soluble HAP compounds at new sources.* The owner or operator of a new source shall reduce, by removal or destruction, the mass flow rate of total soluble HAP from affected wastewater by 99 percent or more. The removal/destruction efficiency shall be determined by the procedures in §63.1257(e)(2)(ii) or (iii)(C) for noncombustion, nonbiological treatment processes; §63.1257(e)(2)(ii) and (iii)(D) for combustion processes; §63.1257(e)(2)(iii)(F) for open biological treatment processes; and §63.1257(e)(2)(ii) or (iii)(G) for closed biological treatment processes.

(13) *Treatment in a RCRA unit option.* The owner or operator shall treat the affected wastewater or residual in a unit identified in, and complying with, paragraph (g)(13)(i), (ii), or (iii) of this section. These units are exempt from the design evaluation or performance tests requirements specified in paragraph (g)(4) of this section and §63.1257(e)(2), and from the monitoring requirements specified in paragraph (a)(2)(iii) of this section, as well as recordkeeping and reporting requirements associated with monitoring and performance tests.

(i) The wastewater or residual is discharged to a hazardous waste incinerator for which the owner or operator has been issued a final permit under 40 CFR part 270 and complies with the requirements of 40 CFR part 264, subpart O, or has certified compliance with the interim status requirements of 40 CFR part 265, subpart O;

(ii) The wastewater or residual is discharged to a process heater or boiler burning hazardous waste for which the owner or operator:

(A) Has been issued a final permit under 40 CFR part 270 and complies with the requirements of 40 CFR part 266, subpart H; or

(B) Has certified compliance with the interim status requirements of 40 CFR part 266, subpart H.

(iii) The wastewater or residual is discharged to an underground injection well for which the owner or operator has been issued a final permit under 40 CFR part 270 or 40 CFR part 144 and complies with the requirements of 40 CFR part 122. The owner or operator shall comply with all applicable requirements of this subpart prior to the point where the wastewater enters the underground portion of the injection well.

(14) *Residuals.* For each residual removed from affected wastewater, the owner or operator shall control for air emissions by complying with paragraphs (b) through (f) of this section and by complying with one of the provisions in paragraphs (g)(14)(i) through (iv) of this section.

(i) Recycle the residual to a production process or sell the residual for the purpose of recycling. Once a residual is returned to a production process, the residual is no longer subject to this section.

(ii) Return the residual to the treatment process.

(iii) Treat the residual to destroy the total combined mass flow rate of soluble and/or partially soluble HAP compounds by 99 percent or more, as determined by the procedures specified in §63.1257(e)(2)(iii)(C) or (D).

(iv) Comply with the requirements for RCRA treatment options specified in paragraph (g)(13) of this section.

(h) *Control devices.* For each control device or combination of control devices used to comply with the provisions in paragraphs (b) through (f) and (g)(5) of this section, the owner or operator shall operate and maintain the control device or combination of control devices in accordance with the requirements of paragraphs (h)(1) through (5) of this section.

(1) Whenever organic HAP emissions are vented to a control device which is used to comply with the provisions of this subpart, such control device shall be operating.

(2) The control device shall be designed and operated in accordance with paragraph (h)(2) (i), (ii), (iii), (iv), or (v) of this section, as demonstrated by the provisions in §63.1257(e)(3).

(i) An enclosed combustion device (including but not limited to a vapor incinerator, boiler, or process heater) shall meet the conditions in paragraph (h)(2)(i) (A), (B), or (C) of this section, alone or in combination with other control devices. If a boiler or process heater is used as the control device, then the vent stream shall be introduced into the flame zone of the boiler or process heater.

(A) Reduce the organic HAP emissions vented to the control device by 95 percent by weight or greater;

(B) Achieve an outlet TOC concentration of 20 ppmv on a dry basis corrected to 3 percent oxygen. The owner or operator shall use either Method 18 of 40 CFR part 60, appendix A, or any other method or data that has been validated according to the applicable procedures in Method 301 of appendix A of this part; or

(C) Provide a minimum residence time of 0.5 seconds at a minimum temperature of 760 °C.

(ii) A vapor recovery system (including but not limited to a carbon adsorption system or condenser), alone or in combination with other control devices, shall reduce the organic HAP emissions vented to the control device by 95 percent by weight or greater or achieve an outlet TOC concentration of 20 ppmv. The 20 ppmv performance standard is not applicable to compliance with the provisions of paragraphs (c) or (d) of this section.

(iii) A flare shall comply with the requirements of §63.11(b).

(iv) A scrubber, alone or in combination with other control devices, shall reduce the organic HAP emissions in such a manner that 95 weight-percent is either removed, or destroyed by chemical reaction with the scrubbing liquid, or achieve an outlet TOC concentration of 20 ppmv. The 20 ppmv performance standard is not applicable to compliance with the provisions of paragraphs (c) or (d) of this section.

(v) Any other control device used shall, alone or in combination with other control devices, reduce the organic HAP emissions vented to the control device by 95 percent by weight or greater or achieve an outlet TOC concentration of 20 ppmv. The 20 ppmv performance standard is not applicable to compliance with the provisions of paragraphs (c) or (d) of this section.

(3) If the control device is a combustion device, the owner or operator shall comply with the requirements in §63.1252(g) to control halogenated vent streams.

(4) Except as provided in paragraph (i) of this section, if gaps, cracks, tears, or holes are observed in ductwork, piping, or connections to covers and control devices during an inspection, a first effort to repair shall be made as soon as practical but no later than 5 calendar days after identification. Repair shall be completed no later than 15 calendar days after identification or discovery of the defect.

(5) The provisions in paragraphs (h)(1) through (4) of this section apply at all times, except as specified in §63.1250(g). The owner or operator may not comply with the planned routine maintenance provisions in §63.1252(h) for vent streams from waste management units.

(i) *Delay of repair.* Delay of repair of equipment for which a control equipment failure or a gap, crack, tear, or hole has been identified, is allowed if the repair is technically infeasible without a shutdown, as defined in §63.1251, or if the owner or operator determines that emissions of purged material from immediate repair would be greater than the emissions likely to result from delay of repair. Repair of this equipment shall occur by the end of the next shutdown.

(1) Delay of repair of equipment for which a control equipment failure or a gap, crack, tear, or hole has been identified, is allowed if the equipment is emptied or is no longer used to treat or manage affected wastewater or residuals removed from affected wastewater.

(2) Delay of repair of equipment for which a control equipment failure or a gap, crack, tear, or hole has been identified is also allowed if additional time is necessary due to the unavailability of parts beyond the control of the owner or operator. Repair shall be completed as soon as practical. The owner or operator who uses this provision shall comply with the requirements of §63.1259(h) to document the reasons that the delay of repair was necessary.

[63 FR 50326, Sept. 21, 1998, as amended at 65 FR 52607, Aug. 29, 2000; 66 FR 40133, Aug. 2, 2001; 70 FR 25670, May 13, 2005; 71 FR 20459, Apr. 20, 2006]

§ 63.1257 Test methods and compliance procedures.

(a) *General.* Except as specified in paragraph (a)(5) of this section, the procedures specified in paragraphs (c), (d), (e), and (f) of this section are required to demonstrate initial compliance with §§63.1253, 63.1254, 63.1256, and 63.1252(e), respectively. The provisions in paragraphs (a) (2) through (3) apply to performance tests that are specified in paragraphs (c), (d), and (e) of this section. The provisions in paragraph (a)(5) of this section are used to demonstrate initial compliance with the alternative standards specified in §§63.1253(d) and 63.1254(c). The provisions in paragraph (a)(6) of this section are used to comply with the outlet concentration requirements specified in §§63.1253(c), 63.1254 (a)(2)(i) and (a)(3)(ii)(B), 63.1254(b)(i) and 63.1256(h)(2).

(1) *Design evaluation.* To demonstrate that a control device meets the required control efficiency, a design evaluation must address the composition and organic HAP concentration of the vent stream entering the control device. A design evaluation also must address other vent stream characteristics and control device operating parameters as specified in any one of paragraphs (a)(1) (i) through (vi) of this section, depending on the type of control device that is used. If the vent stream is not the only inlet to the control device, the efficiency demonstration also must consider all other vapors, gases, and liquids, other than fuels, received by the control device.

(i) For an enclosed combustion device used to comply with the provisions of 63.1253 (b)(2) or (c)(2), or 63.1256(h)(2)(i)(C) with a minimum residence time of 0.5 seconds and a minimum temperature of 760 °C, the design evaluation must document that these conditions exist.

(ii) For a combustion control device that does not satisfy the criteria in paragraph (a)(1)(i) of this section, the design evaluation must document control efficiency and address the following characteristics, depending on the type of control device:

(A) For a thermal vapor incinerator, the design evaluation must consider the autoignition temperature of the organic HAP, must consider the vent stream flow rate, and must establish the design minimum and average temperature in the combustion zone and the combustion zone residence time.

(B) For a catalytic vapor incinerator, the design evaluation shall consider the vent stream flow rate and shall establish the design minimum and average temperatures across the catalyst bed inlet and outlet.

(C) For a boiler or process heater, the design evaluation shall consider the vent stream flow rate; shall establish the design minimum and average flame zone temperatures and combustion zone residence time; and shall describe the method and location where the vent stream is introduced into the flame zone.

(iii) For a condenser, the design evaluation shall consider the vent stream flow rate, relative humidity, and temperature and shall establish the design outlet organic HAP compound concentration level, design average temperature of the condenser exhaust vent stream, and the design average temperatures of the coolant fluid at the condenser inlet and outlet. The temperature of the gas stream exiting the condenser must be measured and used to establish the outlet organic HAP concentration.

(iv) For a carbon adsorption system that regenerates the carbon bed directly onsite in the control device such as a fixed-bed adsorber, the design evaluation shall consider the vent stream flow rate, relative humidity, and temperature and shall establish the design exhaust vent stream organic compound concentration level, adsorption cycle time, number and capacity of carbon beds, type and working capacity of activated carbon used for carbon beds, design total regeneration stream mass or volumetric flow over the period of each complete carbon bed regeneration cycle, design carbon bed temperature after regeneration, design carbon bed regeneration time, and design service life of carbon. For vacuum desorption, the pressure drop shall be included.

(v) For a carbon adsorption system that does not regenerate the carbon bed directly onsite in the control device such as a carbon canister, the design evaluation shall consider the vent stream mass or volumetric flow rate, relative humidity, and temperature and shall establish the design exhaust vent stream organic compound concentration level, capacity of carbon bed, type and working capacity of activated carbon used for carbon bed, and design carbon replacement interval based on the total carbon working capacity of the control device and source operating schedule.

(vi) For a scrubber, the design evaluation shall consider the vent stream composition; constituent concentrations; liquid-to-vapor ratio; scrubbing liquid flow rate and concentration; temperature; and the reaction kinetics of the constituents with the scrubbing liquid. The design evaluation shall establish the design exhaust vent stream organic compound concentration level and will include the additional information in paragraphs (a)(1)(vi)(A) and (B) of this section for trays and a packed column scrubber.

(A) Type and total number of theoretical and actual trays;

(B) Type and total surface area of packing for entire column, and for individual packed sections if column contains more than one packed section.

(2) *Calculation of TOC or total organic HAP concentration.* The TOC concentration or total organic HAP concentration is the sum of the concentrations of the individual components. If compliance is being determined based on TOC, the owner or operator shall compute TOC for each run using Equation 6 of this subpart. If compliance with the wastewater provisions is being determined based on total organic HAP, the owner or operator shall compute total organic HAP using Equation 6 of this subpart, except that only the organic HAP compounds shall be summed; when determining compliance with paragraph (e)(3)(i) of this section, only the soluble and partially soluble HAP compounds shall be summed.

$$CG_T = \frac{1}{m}\sum_{j=1}^{m}\left(\sum_{i=1}^{n} CGS_{i,j}\right) \qquad (Eq.\ 6)$$

where:

CG_T=total concentration of TOC in vented gas stream, average of samples, dry basis, ppmv

$CGS_{i,j}$=concentration of sample components in vented gas stream for sample j, dry basis, ppmv

i=identifier for a compound

n=number of components in the sample

j=identifier for a sample

m=number of samples in the sample run

(3) *Outlet concentration correction for supplemental gases* —(i) *Combustion devices.* Except as provided in §63.1258(b)(5)(ii)(A), for a combustion device used to comply with an outlet concentration standard, the actual TOC, organic HAP, and hydrogen halide and halogen must be corrected to 3 percent oxygen if supplemental gases, as defined in §63.1251, are added to the vent stream or manifold. The integrated sampling and analysis procedures of Method 3B of 40 CFR part 60, appendix A, shall be used to determine the actual oxygen concentration ($\%O_{2d}$). The samples shall be taken during the same time that the TOC or total organic HAP or hydrogen halides and halogen samples are taken. The concentration corrected to 3 percent oxygen (C_d) shall be computed using Equation 7A of this subpart:

$$C_c = C_m \left(\frac{17.9}{20.9 - \%O_{2d}} \right) \qquad \text{(Eq. 7A)}$$

Where:

C_c= concentration of TOC or total organic HAP or hydrogen halide and halogen corrected to 3 percent oxygen, dry basis, ppmv

C_m= total concentration of TOC or total organic HAP or hydrogen halide and halogen in vented gas stream, average of samples, dry basis, ppmv

$\%O_{2d}$= concentration of oxygen measured in vented gas stream, dry basis, percent by volume

(ii) *Noncombustion devices.* Except as provided in §63.1258(b)(5)(ii)(B), if a control device other than a combustion device is used to comply with a TOC, organic HAP, or hydrogen halide outlet concentration standard, the owner or operator must correct the actual concentration for supplemental gases using Equation 7B of this subpart; process knowledge and representative operating data may be used to determine the fraction of the total flow due to supplemental gas.

$$C_a = C_m \left(\frac{V_s + V_a}{V_a} \right) \qquad \text{(Eq. 7B)}$$

Where:

C_a= corrected outlet TOC, organic HAP, and hydrogen halides and halogens concentration, dry basis, ppmv

C_m= actual TOC, organic HAP, and hydrogen halides and halogens concentration measured at control device outlet, dry basis, ppmv

V_a= total volumetric flow rate of all gas streams vented to the control device, except supplemental gases

V_s= total volumetric flow rate of supplemental gases

(4) *Exemptions from compliance demonstrations.* An owner or operator using any control device specified in paragraphs (a)(4)(i) through (iv) of this section is exempt from the initial compliance provisions in paragraphs (c), (d), and (e) of this section.

(i) A boiler or process heater with a design heat input capacity of 44 megawatts or greater.

(ii) A boiler or process heater into which the emission stream is introduced with the primary fuel.

(iii) A boiler or process heater burning hazardous waste for which the owner or operator:

(A) Has been issued a final permit under 40 CFR part 270 and complies with the requirements of 40 CFR part 266, subpart H, or

(B) Has certified compliance with the interim status requirements of 40 CFR part 266, subpart H.

(iv) A hazardous waste incinerator for which the owner or operator has been issued a final permit under 40 CFR part 270 and complies with the requirements of 40 CFR part 264, subpart O, or has certified compliance with the interim status requirements of 40 CFR part 265, subpart O.

(5) *Initial compliance with alternative standard.* Initial compliance with the alternative standards in §§63.1253(d) and 63.1254(c) for combustion devices is demonstrated when the outlet TOC concentration is 20 ppmv or less, and the outlet hydrogen halide and halogen concentration is 20 ppmv or less. Initial compliance with the alternative standards in §§63.1253(d) and 63.1254(c) for noncombustion devices is demonstrated when the outlet TOC concentration is 50 ppmv or less, and the outlet hydrogen halide and hydrogen concentration is 50 ppmv or less. To demonstrate initial compliance, the owner or operator shall be in compliance with the monitoring provisions in §63.1258(b)(5) on the initial compliance date. The owner or operator shall use Method 18 to determine the predominant organic HAP in the emission stream if the TOC monitor is calibrated on the predominant HAP.

(6) *Initial compliance with the 20 ppmv outlet limit.* Initial compliance with the 20 ppmv TOC and hydrogen halide and halogen concentration is demonstrated when the outlet TOC concentration is 20 ppmv or less, and the outlet hydrogen halide and halogen concentration is 20 ppmv or less. To demonstrate initial compliance, the operator shall use test methods described in paragraph (b) of this section. The owner or operator shall comply with the monitoring provisions in §63.1258(b)(1) through (4) on the initial compliance date.

(b) *Test methods.* When testing is conducted to measure emissions from an affected source, the test methods specified in paragraphs (b)(1) through (10) of this section shall be used.

(1) EPA Method 1 or 1A of appendix A of part 60 is used for sample and velocity traverses.

(2) EPA Method 2, 2A, 2C, or 2D of appendix A of part 60 is used for velocity and volumetric flow rates.

(3) EPA Method 3 of appendix A of part 60 is used for gas analysis.

(4) EPA Method 4 of appendix A of part 60 is used for stack gas moisture.

(5) [Reserved]

(6) The following methods are specified for concentration measurements:

(i) Method 18 may be used to determine HAP concentration in any control device efficiency determination.

(ii) Method 25 of appendix A of part 60 may be used to determine total gaseous nonmethane organic concentration for control efficiency determinations in combustion devices.

(iii) Method 26 or 26A of appendix A of part 60 shall be used to determine hydrogen chloride, hydrogen halide and halogen concentrations in control device efficiency determinations or in the 20 ppmv outlet hydrogen halide concentration standard.

(iv) Method 25A of appendix A of part 60 may be used to determine the HAP or TOC concentration for control device efficiency determinations under the conditions specified in Method 25 of appendix A for direct measurement of an effluent with a flame ionization detector, or in demonstrating compliance with the 20 ppmv TOC outlet standard. If Method 25A is used to determine the concentration of TOC for the 20 ppmv standard, the instrument shall be calibrated on methane or the predominant HAP. If calibrating on the predominant HAP, the use of Method 25A shall comply with paragraphs (b)(6)(iv)(A) through (C) of this section.

(A) The organic HAP used as the calibration gas for Method 25A, 40 CFR part 60, appendix A, shall be the single organic HAP representing the largest percent by volume.

(B) The use of Method 25A, 40 CFR part 60, appendix A, is acceptable if the response from the high level calibration gas is at least 20 times the standard deviation of the response from the zero calibration gas when the instrument is zeroed on the most sensitive scale.

(C) The span value of the analyzer must be less than 100 ppmv.

(7) *Testing conditions for continuous processes.* Testing of emissions on equipment operating as part of a continuous process will consist of three l-hour runs. Gas stream volumetric flow rates shall be measured every 15 minutes during each 1-hour run. The HAP concentration shall be determined from samples collected in an integrated sample over the duration of each l-hour test run, or from grab samples collected simultaneously with the flow rate measurements (every 15 minutes). If an integrated sample is collected for laboratory analysis, the sampling rate shall be adjusted proportionally to reflect variations in flow rate. For continuous gas streams, the emission rate used to determine compliance shall be the average emission rate of the three test runs.

(8) *Testing and compliance determination conditions for batch processes.* Testing of emissions on equipment where the flow of gaseous emissions is intermittent (batch operations) shall be conducted as specified in paragraphs (b)(8)(i) through (iii) of this section.

(i) Except as provided in paragraph (b)(9) of this section for condensers, testing shall be conducted at absolute worst-case conditions or hypothetical worst-case conditions. Gas stream volumetric flow rates shall be measured at 15-minute intervals. The HAP or TOC concentration shall be determined from samples collected in an integrated sample over the duration of the test, or from grab samples collected simultaneously with the flow rate measurements (every 15 minutes). If an integrated sample is collected for laboratory analysis, the sampling rate shall be adjusted proportionally to reflect variations in flow rate. The absolute worst-case or hypothetical worst-case conditions shall be characterized by the criteria presented in paragraphs (b)(8)(i)(A) and (B)of this section. In all cases, a site-specific plan shall be submitted to the Administrator for approval prior to testing in accordance with §63.7(c) and §63.1260(l). The test plan shall include the emission profile described in paragraph (b)(8)(ii) of this section.

(A) Absolute worst-case conditions are defined by the criteria presented in paragraph (b)(8)(i)(A)(*1*) or (*2*) of this section if the maximum load is the most challenging condition for the control device. Otherwise, absolute worst-case conditions are defined by the conditions in paragraph (b)(8)(i)(A)(*3*) of this section. The owner or operator must consider all relevant factors, including load and compound-specific characteristics in defining absolute worst-case conditions.

(*1*) The period in which the inlet to the control device will contain at least 50 percent of the maximum HAP load (in lb) capable of being vented to the control device over any 8 hour period. An emission profile as described in paragraph (b)(8)(ii)(A) of this section shall be used to identify the 8-hour period that includes the maximum projected HAP load.

(*2*) A 1-hour period of time in which the inlet to the control device will contain the highest HAP mass loading rate, in lb/hr, capable of being vented to the control device. An emission profile as described in paragraph (b)(8)(ii)(A) of this section shall be used to identify the 1-hour period of maximum HAP loading.

(*3*) The period of time when the HAP loading or stream composition (including non-HAP) is most challenging for the control device. These conditions include, but are not limited to the following:

(*i*) Periods when the stream contains the highest combined VOC and HAP load, in lb/hr, described by the emission profiles in paragraph (b)(8)(ii) of this section;

(*ii*) Periods when the streams contain HAP constituents that approach limits of solubility for scrubbing media;

(*iii*) Periods when the streams contain HAP constituents that approach limits of adsorptivity for carbon adsorption systems.

(B) Hypothetical worst-case conditions are simulated test conditions that, at a minimum, contain the highest hourly HAP load of emissions that would be predicted to be vented to the control device from the emissions profile described in paragraph (b)(8)(ii)(B) or (C) of this section.

(ii) *Emissions profile.* The owner or operator may choose to perform tests only during those periods of the worst-case conditions that the owner or operator selects to control as part of achieving the required emission reduction. The owner or operator must develop an emission profile for the vent to the control device that describes the characteristics of the vent stream at the inlet to the control device under worst case conditions. The emission profile shall be developed based on any one of the procedures described in (b)(8)(ii)(A) through (C) of this section, as required by paragraph (b)(8)(i).

(A) *Emission profile by process.* The emission profile must consider all emission episodes that could contribute to the vent stack for a period of time that is sufficient to include all processes venting to the stack and shall consider production scheduling. The profile shall describe the HAP load to the device that equals the highest sum of emissions from the episodes that can vent to the control device in any given hour. Emissions per episode shall be calculated using the procedures specified in paragraph (d)(2) of this section. Emissions per episode shall be divided by the duration of the episode only if the duration of the episode is longer than 1 hour.

(B) *Emission profile by equipment.* The emission profile must consist of emissions that meet or exceed the highest emissions, in lb/hr, that would be expected under actual processing conditions. The profile shall describe equipment configurations used to generate the emission events, volatility of materials processed in the equipment, and the rationale used to identify and characterize the emission events. The emissions may be based on using a compound more volatile than compounds actually used in the process(es), and the emissions may be generated from all equipment in the process(es) or only selected equipment.

(C) *Emission profile by capture and control device limitation.* The emission profile shall consider the capture and control system limitations and the highest emissions, in lb/hr, that can be routed to the control device, based on maximum flowrate and concentrations possible because of limitations on conveyance and control equipment (e.g., fans, LEL alarms and safety bypasses).

(iii) Three runs, at a minimum of 1 hour each and a maximum of 8 hours each, are required for performance testing. Each run must occur over the same worst-case conditions, as defined in paragraph (b)(8)(i) of this section.

(9) *Testing requirements for condensers.* For emission streams controlled using condensers, continuous direct measurement of condenser outlet gas temperature to be used in determining concentrations per the design evaluation described in §63.1257(a)(1)(iii) is required.

(10) *Wastewater testing.* Wastewater analysis shall be conducted in accordance with paragraph (b)(10)(i), (ii), (iii), (iv), or (v) of this section.

(i) *Method 305.* Use procedures specified in Method 305 of 40 CFR part 63, appendix A, and comply with requirements specified in paragraph (b)(10)(vi) of this section.

(ii) *EPA Method 624, 625, 1624, 1625, 1666, or 1671.* Use procedures specified in EPA Method 624, 625, 1624, 1625, 1666, or 1671 of 40 CFR part 136, appendix A, and comply with requirements in paragraph (b)(10)(vi) of this section.

(iii) *Method 8260 or 8270.* Use procedures specified in Method 8260 or 8270 in "Test Methods for Evaluating Solid Waste, Physical/Chemical Methods," EPA Publication No. SW–846, Third Edition, September 1986, as amended by Update I, November 15, 1992. As an alternative, an owner or operator may use any more recent, updated version of Method 8260 or 8270 approved by the EPA. For the purpose of using Method 8260 or 8270 to comply with this subpart, the owner or operator must maintain a formal quality assurance program consistent with either Section 8 of Method 8260 or Method 8270, and this program must include the following elements related to measuring the concentrations of volatile compounds:

(A) Documentation of site-specific procedures to minimize the loss of compounds due to volatilization, biodegradation, reaction, or sorption during the sample collection, storage, and preparation steps.

(B) Documentation of specific quality assurance procedures followed during sampling, sample preparation, sample introduction, and analysis.

(C) Measurement of the average accuracy and precision of the specific procedures, including field duplicates and field spiking of the material source before or during sampling with compounds having similar chemical characteristics to the target analytes.

(iv) *Other EPA methods.* Use procedures specified in the method, validate the method using the procedures in paragraph (b)(10)(iv)(A) or (B) of this section, and comply with the procedures in paragraph (b)(10)(vi) of this section.

(A) Validate the method according to section 5.1 or 5.3 of Method 301 of 40 CFR part 63, appendix A.

(B) Follow the procedure as specified in "Alternative Validation Procedure for EPA Waste Methods" 40 CFR part 63, appendix D.

(v) *Methods other than an EPA method.* Use procedures specified in the method, validate the method using the procedures in paragraph (b)(10)(iv)(A) of this section, and comply with the requirements in paragraph (b)(10)(vi) of this section.

(vi) *Sampling plan.* The owner or operator shall prepare a sampling plan. Wastewater samples shall be collected using sampling procedures which minimize loss of organic compounds during sample collection and analysis and maintain sample integrity. The sample plan shall include procedures for determining recovery efficiency of the relevant partially soluble and soluble HAP compounds. An example of an acceptable sampling plan would be one that incorporates similar sampling and sample handling requirements to those of Method 25D of 40 CFR part 60, appendix A. The sampling plan shall be maintained at the facility.

(c) *Initial compliance with storage tank provisions.* The owner or operator of an affected storage tank shall demonstrate initial compliance with §63.1253(b) or (c), as applicable, by fulfilling the requirements of paragraph (c)(1),or (c)(2), or (c)(3) of this section.

(1) *Performance test.* If this option is chosen to demonstrate initial compliance with the percent reduction requirement of §63.1253(b)(1) or (c)(1)(i), the efficiency of the control device shall be calculated using performance test data as specified in paragraphs (c)(1)(i) through (iii) of this section. To demonstrate initial compliance with the outlet concentration requirements in §63.1253(b)(2) and (c)(2), the owner or operator must conduct a performance test and fulfill the requirements of paragraph (a)(6) of this section.

(i) Equations 8 and 9 of this subpart shall be used to calculate the mass rate of total HAP reasonably expected maximum filling rate at the inlet and outlet of the control device for standard conditions of 20 °C: where:

$$E_i = K_2\left(\sum_{j=1}^{n} C_{ij}M_{ij}\right)Q_i \qquad (Eq.\ 8) \qquad E_o = K_2\left(\sum_{j=1}^{n} C_{oj}M_{oj}\right)Q_o \qquad (Eq.\ 9)$$

where:

C_{ij}, C_{oj}= concentration of sample component j of the gas stream at the inlet and outlet of the control device, respectively, dry basis, ppmv

E_i, E_o= mass rate of total HAP at the inlet and outlet of the control device, respectively, dry basis, kg/hr

M_{ij}, M_{oj}= molecular weight of sample component j of the gas stream at the inlet and outlet of the control device, respectively, gram/gram-mole

Q_i, Q_o= flow rate of gas stream at the inlet and outlet of the control device, respectively, dry standard cubic meter per minute

K_2= constant, 2.494×10^{-6}(parts per million)$^{-1}$(gram-mole per standard cubic meter) (kilogram/gram) (minute/hour), where standard temperature is 20 °C

n = number of sample components in the gas stream

(ii) The percent reduction in total HAP shall be calculated using Equation 10 of this subpart:

$$R = \frac{E_i - E_o}{E_i}(100) \qquad (Eq.\ 10)$$

where:

R = control efficiency of control device, percent

E_i= mass rate of total HAP at the inlet to the control device as calculated under paragraph (c)(1)(i) of this section, kilograms organic HAP per hour

E_o= mass rate of total HAP at the outlet of the control device, as calculated under paragraph (c)(1)(i) of this section, kilograms organic HAP per hour

(iii) A performance test is not required to be conducted if the control device used to comply with §63.1253 (storage tank provisions) is also used to comply with §63.1254 (process vent provisions), and compliance with §63.1254 has been demonstrated in accordance with paragraph (d) of this section.

(2) *Design evaluation.* If this option is chosen to demonstrate initial compliance with the percent reduction requirement of §63.1253(b) or (c), a design evaluation shall be prepared in accordance with the provisions in paragraph (a)(1) of this section. The design evaluation shall include documentation demonstrating that the control device being used achieves the required control efficiency during reasonably expected maximum filling rate.

(3) *Floating roof.* If the owner or operator of an affected source chooses to comply with the provisions of §63.1253(b) or (c) by installing a floating roof, the owner or operator shall comply with the procedures described in §§63.119(b), (c), (d), and 63.120(a), (b), and (c), with the differences noted in paragraphs (c)(3)(i) through (v) of this section for the purposes of this subpart.

(i) When the term “storage vessel” is used in §§63.119 and 63.120, the definition of “storage tank” in §63.1251 shall apply for the purposes of this subpart.

(ii) When December 31, 1992 is referred to in §63.119, April 2, 1997 shall apply instead for the purposes of this subpart.

(iii) When April 22, 1994 is referred to in §63.119, September 21, 1998 shall apply instead for the purposes of this subpart.

(iv) When the phrase “the compliance date specified in §63.100 of subpart F of this part” is referred to in §63.120, the phrase “the compliance date specified in §63.1250” shall apply for the purposes of this subpart.

(v) When the phrase “the maximum true vapor pressure of the total organic HAP's in the stored liquid falls below the values defining Group 1 storage vessels specified in table 5 or table 6 of this subpart” is referred to in §63.120(b)(1)(iv), the phrase “the maximum true vapor pressure of the total organic HAP in the stored liquid falls below 13.1 kPa” shall apply for the purposes of this subpart.

(4) *Initial compliance with alternative standard.* Initial compliance with §63.1253(d) is demonstrated by fulfilling the requirements of paragraph (a)(5) of this section.

(5) *Planned maintenance.* The owner or operator shall demonstrate compliance with the requirements of §63.1253(e) by including the periods of planned routine maintenance specified by date and time in each Periodic Report required by §63.1260.

(d) *Initial compliance with process vent provisions.* An owner or operator of an affected source complying with the process vent standards in §63.1254 shall demonstrate compliance using the procedures described in paragraphs (d)(1) through (4) of this section.

(1) Except as provided in paragraph (a)(4) of this section, initial compliance with the process vent standards in §63.1254 shall be demonstrated using the procedures specified in paragraphs (d)(1)(i) through (iv), as applicable.

(i) Initial compliance with §63.1254(a)(2)(i) is demonstrated when the actual emissions of HAP from the sum of all process vents within a process is less than or equal to 900 kg/yr. Initial compliance with §63.1254(a)(2)(ii) is demonstrated when the actual emissions of HAP from the sum of all process vents in compliance with §63.1254(a)(2)(i) is less than or equal to 1,800 kg/yr. Uncontrolled HAP emissions and controlled HAP emissions shall be determined using the procedures described in paragraphs (d)(2) and (3) of this section. Controlled emissions during periods of planned routine maintenance of a CCCD as specified in §63.1252(h), must be calculated assuming the HAP emissions are reduced by 93 percent.

(ii) Initial compliance with the percent reduction requirements in §63.1254(a)(1)(i), (a)(3), and (b) is demonstrated by:

(A) Determining controlled HAP emissions using the procedures described in paragraph (d)(3) of this section, and uncontrolled HAP emissions determined using the procedures described in paragraph (d)(2) of this section, and demonstrating that the reductions required by §63.1254(a)(1)(i), (a)(3), and (b) are met; or

(B) Controlling the process vents using a device meeting the criteria specified in paragraph (a)(4) of this section.

(iii) Initial compliance with the outlet concentration requirements in §63.1254(a)(1)(ii)(A), (a)(3), and (b)(1) is demonstrated when the outlet TOC concentration is 20 ppmv or less and the outlet hydrogen halide and halogen concentration is 20 ppmv or less. The owner or operator shall demonstrate compliance by fulfilling the requirements in paragraph (a)(6) of this section.

(iv) Initial compliance with §63.1254(c) is demonstrated by fulfilling the requirements of paragraph (a)(5) of this section.

(2) *Uncontrolled emissions.* An owner or operator of an affected source complying with the emission limitation required by §63.1254(a)(1), or emissions reductions specified in §63.1254(a)(2), (a)(3), or (b), for each process vent within a process, shall calculate uncontrolled emissions from all equipment in the process according to the procedures described in paragraph (d)(2)(i) or (ii) of this section, as appropriate.

(i) *Emission estimation procedures.* Owners or operators shall determine uncontrolled emissions of HAP using measurements and/or calculations for each batch emission episode within each unit operation according to the engineering evaluation methodology in paragraphs (d)(2)(i)(A) through (H) of this section. Except where variations are noted, individual HAP partial pressures in multicomponent systems shall be determined by the following methods: If the components are miscible in one another, use Raoult's law to calculate the partial pressures; if the solution is a dilute aqueous mixture, use Henry's law to calculate partial pressures; if Raoult's law or Henry's law are not appropriate or available, use experimentally obtained activity coefficients or models such as the group-contribution

models, to predict activity coefficients, or assume the components of the system behave independently and use the summation of all vapor pressures from the HAP as the total HAP partial pressure. Chemical property data can be obtained from standard reference texts.

(A) *Vapor displacement.* Emissions from vapor displacement due to transfer of material shall be calculated using Equation 11 of this subpart. The individual HAP partial pressures may be calculated using Raoult's law.

$$E = \frac{(V)}{(R)(T)} \times \sum_{i=1}^{n} (P_i)(MW_i) \qquad (Eq.\ 11)$$

where:

E = mass of HAP emitted

V = volume of gas displaced from the vessel

R = ideal gas law constant

T = temperature of the vessel vapor space; absolute

P_i= partial pressure of the individual HAP

MW_i= molecular weight of the individual HAP

n = number of HAP compounds in the emission stream i = identifier for a HAP compound

(B) *Purging.* Emissions from purging shall be calculated using Equation 12 of this subpart. The partial pressures of individual condensable compounds may be calculated using Raoult's law, the pressure of the vessel vapor space may be set equal to 760 mmHg, and the partial pressure of HAP shall be assumed to be 25 percent of the saturated value if the purge flow rate is greater than 100 standard cubic feet per minute (scfm).

$$E = \sum_{i=1}^{n} P_i MW_i \times \frac{(V)(t)}{(R)(T)} \times \frac{P_T}{P_T - \sum_{j=1}^{m} (P_j)} \qquad (Eq.\ 12)$$

Where:

E = mass of HAP emitted

V = purge flow rate at the temperature and pressure of the vessel vapor space

R = ideal gas law constant

T = temperature of the vessel vapor space; absolute

P_i= partial pressure of the individual HAP

P_j= partial pressure of individual condensable VOC compounds (including HAP)

P_T= pressure of the vessel vapor space

MW_i= molecular weight of the individual HAP

t = time of purge

n = number of HAP compounds in the emission stream

i = identifier for a HAP compound

j = identifier for a condensable compound

m = number of condensable compounds (including HAP) in the emission stream

(C) *Heating.* Emissions caused by the heating of a vessel to a temperature equal to or lower than 10 K below the boiling point shall be calculated using the procedures in either paragraph (d)(2)(i)(C)(*1*) or (*3*) of this section. Emissions caused by heating a vessel to a temperature that is higher than 10 K below the boiling point and less than the boiling point, must be calculated using the procedures in either paragraph (d)(2)(i)(C) (*2*) or (*3*) of this section. If the contents of a vessel are heated to the boiling point, emissions must be calculated using the procedures in paragraph (d)(2)(i)(C)(*4*) of this section.

(*1*) This paragraph describes procedures to calculate emissions if the final temperature to which the vessel contents are heated is 10 K below the boiling point of the HAP in the vessel, or lower. The owner or operator shall calculate the mass of HAP emitted per episode using either Equation 13 or 14 of this subpart. The moles of noncondensable gas displaced are calculated using Equation 15 of this subpart. The initial and final pressure of the noncondensable gas in the vessel shall be calculated using Equation 16 of this subpart. The average molecular weight of HAP in the displaced gas shall be calculated using Equation 17 of this subpart.

$$E = \frac{\sum_{i=1}^{n}\left(\left(P_i^*\right)\left(x_i\right)\left(MW_i\right)\right)}{760 - \sum_{j=1}^{m}\left(\left(P_j^*\right)\left(x_j\right)\right)} \times \Delta\eta \qquad \text{(Eq. 13)}$$

$$E = \frac{\frac{\sum_{i=1}^{n}(P_i)_{T1}}{Pa_1} + \frac{\sum_{i=1}^{n}(P_i)_{T2}}{Pa_2}}{2} \times \Delta\eta \times MW_{HAP} \qquad (Eq.14)$$

$$\Delta\eta = \frac{V}{R}\left[\left(\frac{Pa_1}{T_1}\right) - \left(\frac{Pa_2}{T_2}\right)\right] \qquad (Eq.15)$$

$$Pa_n = P_{atm} - \sum_{j=1}^{m}\left(P_j\right)_{Tn} \qquad (Eq.16)$$

$$MW_{HAP} = \sum_{i=1}^{n}\frac{\left(\left(P_i\right)_{T_1} + \left(P_i\right)_{T_2}\right)MW_i}{\sum_{i=1}^{n}\left(\left(P_i\right)_{T_1} + \left(P_i\right)_{T_2}\right)} \qquad (Eq.17)$$

Where:

E = mass of HAP vapor displaced from the vessel being heated

x_i= mole fraction of each HAP in the liquid phase

x_j= mole fraction of each condensable VOC (including HAP) in the liquid phase

P_i^* = vapor pressure of each HAP in the vessel headspace at any temperature between the initial and final heatup temperatures, mmHg.

P_j^* = vapor pressure of each condensable VOC (including HAP) in the vessel headspace at any temperature between the initial and final heatup temperatures, mmHg.

760 = atmospheric pressure, mmHg

MW_{HAP}= the average molecular weight of HAP present in the displaced gas

$\Delta\eta$ = number of moles of noncondensable gas displaced

V = volume of free space in the vessel

R = ideal gas law constant

T_1= initial temperature of vessel contents, absolute

T_2= final temperature of vessel contents, absolute

Pa_n= partial pressure of noncondensable gas in the vessel headspace at initial (n=1) and final (n=2) temperature

P_{atm}= atmospheric pressure (when $\Delta\eta$ is used in Equation 13 of this subpart, P_{atm}may be set equal to 760 mmHg for any vessel)

$(P_j)_{Tn}$= partial pressure of each condensable compound (including HAP) in the vessel headspace at the initial temperature (n=1) and final (n=2) temperature

m = number of condensable compounds (including HAP) in the displaced vapor

j = identifier for a condensable compound

$(P_i)_{Tn}$= partial pressure of each HAP in the vessel headspace at initial (T_1) and final (T_2) temperature

MW_i= molecular weight of the individual HAP

n = number of HAP compounds in the emission stream

i = identifier for a HAP compound

(*2*) If the vessel contents are heated to a temperature that is higher than 10 K below the boiling point and less than the boiling point, emissions must be calculated using the procedures in paragraph (d)(2)(i)(C)(*2*)(*i*), or (*ii*), or (*iii*) of this section.

(*i*) Use Equation 13 of this subpart. In Equation 13 of this subpart, the HAP vapor pressures must be determined at the temperature 10 K below the boiling point. In the calculation of $\Delta\eta$ for Equation 13 of this subpart, T_2must be the temperature 10 K below the boiling point, and Pa_2must be determined at the temperature 10 K below the boiling point.

(*ii*) Use Equation 14 of this subpart. In Equation 14 of this subpart, the HAP partial pressures must be deter mined at the temperature 10 K below the boiling point. In the calculation of $\Delta\eta$ for Equation 14 of this subpart, T_2must be the temperature 10 K below the boiling point, and Pa_2must be determined at the temperature 10 K below the boiling point. In the calculation of MW_{HAP}, the HAP partial pressures must be determined at the temperature 10 K below the boiling point.

(*iii*) Use Equation 14 of this subpart over specific temperature increments. If the initial temperature is lower than 10 K below the boiling point, emissions must be calculated as the sum over two increments; one increment is from the initial temperature to 10 K below the boiling point, and the second is from 10 K below the boiling point to the lower of either the final temperature or the temperature 5 K below the boiling point. If the initial temperature is higher than 10 K below the boiling point, emissions are calculated over one increment from the initial temperature to the lower of either the final temperature or the temperature 5 K below the boiling point.

(*3*)(*i*) Emissions caused by heating a vessel are calculated using Equation 18 of this subpart.

$$E = MW_{HAP} \times \left(N_{avg} \times \ln \left(\frac{P_T - \sum_{i=1}^{n} (P_{i,1})}{P_T - \sum_{i=1}^{n} (P_{i,2})} \right) - (n_{i,2} - n_{i,1}) \right) \qquad (Eq.18)$$

Where:

E = mass of HAP vapor displaced from the vessel being heated

N_{avg}= average gas space molar volume during the heating process

P_T= total pressure in the vessel

$P_{i,1}$= partial pressure of the individual HAP compounds at T_1

$P_{i,2}$= partial pressure of the individual HAP compounds at T_2

MW_{HAP}= average molecular weight of the HAP compounds

$n_{i,1}$= number of moles of condensable in the vessel headspace at T_1

$n_{i,2}$= number of moles of condensable in the vessel headspace at T_2

n = number of HAP compounds in the emission stream

(*ii*) The average gas space molar volume during the heating process is calculated using Equation 19 of this subpart.

$$N_{avg} = \frac{VP_T}{2R} \left(\frac{1}{T_1} + \frac{1}{T_2} \right) \qquad (Eq.19)$$

Where:

N_{avg}= average gas space molar volume during the heating process

V = volume of free space in vessel

P_T= total pressure in the vessel

R = ideal gas law constant

T_1= initial temperature of the vessel

T_2= final temperature of the vessel

(*iii*) The difference in the number of moles of condensable in the vessel headspace between the initial and final temperatures is calculated using Equation 20 of this subpart.

$$(n_{i,2} - n_{i,1}) = \frac{V}{(R)(T_2)} \sum_{i=1}^{n} P_{i,2} - \frac{V}{(R)(T_1)} \sum_{i=1}^{n} P_{i,1} \qquad (Eq.\ 20)$$

Where:

V = volume of free space in vessel

R = ideal gas law constant

T_1= initial temperature in the vessel

T_2= final temperature in the vessel

$P_{i,1}$= partial pressure of the individual HAP compounds at T_1

$P_{i,2}$= partial pressure of the individual HAP compounds at T_2

n = number of HAP compounds in the emission stream

(*4*) If the vessel contents are heated to the boiling point, emissions must be calculated using the procedure in paragraphs (d)(2)(i)(C)(*4*)(*i*) and (*ii*) of this section.

(*i*) Use either of the procedures in paragraph (d)(3)(i)(B)(*3*) of this section to calculate the emissions from heating to the boiling point (note that Pa_2=0 in the calculation of Δη); and

(*ii*) While boiling, the vessel must be operated with a properly operated process condenser. An initial demonstration that a process condenser is properly operated is required for some process condensers, as described in paragraph (d)(3)(iii) of this section.

(D) *Depressurization.* Emissions from depressurization shall be calculated using the procedures in either paragraphs (d)(2)(i)(D)(*1*) through (*4*), paragraphs (d)(2)(i)(D)(*5*) through (*9*), or paragraph (d)(2)(i)(D)(*10*) of this section.

(*1*) Equations 21 and 22 of this subpart are used to calculate the initial and final volumes of noncondensable gas present in the vessel, adjusted to atmospheric pressure. The HAP partial pressures may be calculated using Raoult's law.

$$V_{nc1} = \frac{VP_{nc_1}}{760} \qquad (Eq.\ 21) \quad V_{nc2} = \frac{VP_{nc_2}}{760} \qquad (Eq.\ 22)$$

Where:

V_{nc1}= initial volume of noncondensable gas in the vessel

V_{nc2}= final volume of noncondensable gas in the vessel

V = free volume in the vessel being depressurized

P_{nc1}= initial partial pressure of the noncondensable gas, as calculated using Equation 23 of this subpart, mmHg

P_{nc2}= final partial pressure of the noncondensable gas, as calculated using Equation 24 of this subpart, mmHg

760 = atmospheric pressure, mmHg

(*2*) The initial and final partial pressures of the noncondensable gas in the vessel are determined using Equations 23 and 24 of this subpart:

$$P_{nc1} = P_1 - \sum_{j=1}^{m} (P_j *)(x_j) \qquad (Eq.\ 23) \quad P_{nc2} = P_2 - \sum_{j=1}^{m} (P_j *)(x_j) \qquad (Eq.\ 24)$$

Where:

P_{nc1}= initial partial pressure of the noncondensable gas

P_{nc2}= final partial pressure of the noncondensable gas

P_1= initial vessel pressure

P_2= final vessel pressure

P_j* = vapor pressure of each condensable (including HAP) in the emission stream

x_j= mole fraction of each condensable (including HAP) in the liquid phase

m = number of condensable compounds (including HAP) in the emission stream

j = identifier for a condensable compound

(*3*) The average ratio of moles of noncondensable to moles of an individual HAP in the emission stream is calculated using Equation 25 of this subpart; this calculation must be repeated for each HAP in the emission stream:

$$n_{Ri} = \frac{\left(\frac{P_{nc1}}{(P_i *)(x_i)} + \frac{P_{nc2}}{(P_i *)(x_i)} \right)}{2} \qquad (\text{Eq. } 25)$$

Where:

n_{Ri}= average ratio of moles of noncondensable to moles of individual HAP

P_{nc1}= initial partial pressure of the noncondensable gas, as calculated using Equation 23 of this subpart

P_{nc2}= final partial pressure of the noncondensable gas, as calculated using Equation 24 of this subpart

P_i* = vapor pressure of each individual HAP

x_i= mole fraction of each individual HAP in the liquid phase.

n = number of HAP compounds

i = identifier for a HAP compound

(*4*) The mass of HAP emitted shall be calculated using Equation 26 of this subpart:

$$E = \left(V_{nc1} - V_{nc2}\right) \times \frac{P_{atm}}{RT} \times \sum_{i=1}^{n} \frac{MW_i}{n_{Ri}} \qquad \text{(Eq. 26)}$$

Where:

E = mass of HAP emitted

V_{nc1}= initial volume of noncondensable gas in the vessel, as calculated using Equation 21 of this subpart

V_{nc2}= final volume of noncondensable gas in the vessel, as calculated using Equation 22 of this subpart

n_{Ri}= average ratio of moles of noncondensable to moles of individual HAP, as calculated using Equation 25 of this subpart

P_{atm}= atmospheric pressure, standard

R = ideal gas law constant

T = temperature of the vessel, absolute

MW_i= molecular weight of each HAP

(*5*) The moles of HAP vapor initially in the vessel are calculated using the ideal gas law using Equation 27 of this subpart:

$$n_{HAP} = \frac{(Y_{HAP})(V)(P_1)}{RT} \qquad (Eq.\ 27)$$

Where:

Y_{HAP}= mole fraction of HAP (the sum of the individual HAP fractions, ΣY_i)

V = free volume in the vessel being depressurized

P_1= initial vessel pressure

R = ideal gas law constant

T = vessel temperature, absolute

(*6*) The initial and final moles of noncondensable gas present in the vessel are calculated using Equations 28 and 29 of this subpart:

$$n_1 = \frac{VP_{nc_1}}{RT} \qquad (Eq.\ 28) \quad n_2 = \frac{VP_{nc_2}}{RT} \qquad (Eq.\ 29)$$

Where:

n_1= initial number of moles of noncondensable gas in the vessel

n_2= final number of moles of noncondensable gas in the vessel

V = free volume in the vessel being depressurized

P_{nc1}= initial partial pressure of the noncondensable gas, as calculated using Equation 23 of this subpart

P_{nc2}= final partial pressure of the noncondensable gas, as calculated using Equation 24 of this subpart

R = ideal gas law constant

T = temperature, absolute

(*7*) The initial and final partial pressures of the noncondensable gas in the vessel are determined using Equations 23 and 24 of this subpart.

(*8*) The moles of HAP emitted during the depressurization are calculated by taking an approximation of the average ratio of moles of HAP to moles of noncondensable and multiplying by the total moles of noncondensables released during the depressurization, using Equation 30 of this subpart:

$$n_{HAP} = \frac{\left(\frac{n_{HAP,1}}{n_1} + \frac{n_{HAP,2}}{n_2}\right)}{2}\left[n_1 - n_2\right] \qquad (Eq.30)$$

where:

n_{HAP}= moles of HAP emitted

n_1= initial number of moles of noncondensable gas in the vessel, as calculated using Equation 28 of this subpart

n_2= final number of moles of noncondensable gas in the vessel, as calculated using Equation 29 of this subpart

(*9*) The mass of HAP emitted can be calculated using Equation 31 of this subpart:

$E=\eta_{HAP} * MW_{HAP}$ (Eq. 31)

where:

E = mass of HAP emitted

η_{HAP}= moles of HAP emitted, as calculated using Equation 30 of this subpart

MW_{HAP}= average molecular weight of the HAP as calculated using Equation 17 of this subpart

(*10*) Emissions from depressurization may be calculated using equation 32 of this subpart:

$$E = \frac{V}{(R)(T)} \times 1n \left(\frac{P_1 - \sum_{j=1}^{m}(P_j)}{P_2 - \sum_{j=1}^{m}(P_j)} \right) \times \sum_{i=1}^{n}(P_i)(\mathrm{MW_i}) \qquad (Eq.\ 32)$$

Where:

V = free volume in vessel being depressurized

R = ideal gas law constant

T = temperature of the vessel, absolute

P_1= initial pressure in the vessel

P_2= final pressure in the vessel

P_j= partial pressure of the individual condensable compounds (including HAP)

MW_i= molecular weight of the individual HAP compounds

n = number of HAP compounds in the emission stream

m = number of condensable compounds (including HAP) in the emission stream

i = identifier for a HAP compound

j = identifier for a condensable compound.

(E) *Vacuum systems.* Emissions from vacuum systems may be calculated using Equation 33 of this subpart if the air leakage rate is known or can be approximated. The individual HAP partial pressures may be calculated using Raoult's Law.

$$E = \frac{(La)(t)}{MW_{nc}} \left(\frac{\sum_{i=1}^{n} P_i MW_i}{P_{system} - \sum_{j=1}^{m} P_j} \right) \qquad (\mathrm{Eq.\ 33})$$

Where:

E = mass of HAP emitted

P_{system}= absolute pressure of receiving vessel or ejector outlet conditions, if there is no receiver

P_i= partial pressure of the HAP at the receiver temperature or the ejector outlet conditions

P_j= partial pressure of condensable (including HAP) at the receiver temperature or the ejector outlet conditions

La = total air leak rate in the system, mass/time

MW_{nc}= molecular weight of noncondensable gas

t = time of vacuum operation

MW_i= molecular weight of the individual HAP in the emission stream, with HAP partial pressures calculated at the temperature of the receiver or ejector outlet, as appropriate

(F) *Gas evolution.* Emissions from gas evolution shall be calculated using Equation 12 of this subpart with V calculated using Equation 34 of this subpart:

$$V = \frac{(W_g)(R)(T)}{(P_T)(MW_g)} \qquad (Eq.34)$$

Where:

V = volumetric flow rate of gas evolution

W_g= mass flow rate of gas evolution

R = ideal gas law constant

T = temperature at the exit, absolute

P_T= vessel pressure

MW_g= molecular weight of the evolved gas

(G) *Air drying.* Emissions from air drying shall be calculated using Equation 35 of this subpart:

$$E = B \times \left(\frac{PS_1}{100 - PS_1} - \frac{PS_2}{100 - PS_2} \right) \qquad (Eq.35)$$

Where:

E = mass of HAP emitted

B = mass of dry solids

PS_1= HAP in material entering dryer, weight percent

PS_2= HAP in material exiting dryer, weight percent

(H) *Empty vessel purging.* Emissions from empty vessel purging shall be calculated using Equation 36 of this subpart (Note: The term $e^{-Ft/v}$ can be assumed to be 0):

$$E = \left(\frac{V}{RT} \times \left(\sum_{i=1}^{n} (P_i)(MW_i) \right) \left(1 - e^{-Ft/v}\right) \right) \qquad (Eq.36)$$

Where:

V = volume of empty vessel

R = ideal gas law constant

T = temperature of the vessel vapor space; absolute

P_i= partial pressure of the individual HAP at the beginning of the purge

(MW_i) = molecular weight of the individual HAP

F = flowrate of the purge gas

t = duration of the purge

n = number of HAP compounds in the emission stream

i = identifier for a HAP compound

(ii) *Engineering assessments.* The owner or operator shall conduct an engineering assessment to calculate uncontrolled HAP emissions for each emission episode that is not due to vapor displacement, purging, heating, depressurization, vacuum operations, gas evolution, or air drying. For emission episodes caused by any of these types of activities, the owner or operator also may calculate uncontrolled HAP emissions based on an engineering assessment if the owner or operator can demonstrate to the Administrator that the methods in paragraph (d)(2)(i) of this section are not appropriate. Modified versions of the engineering evaluation methods in paragraphs (d)(2)(i)(A) through (H) may be used if the owner or operator demonstrates that they have been used to meet other regulatory obligations, and they do not affect applicability assessments or compliance determinations under this subpart GGG. One criterion the owner or operator could use to demonstrate that the methods in paragraph (d)(2)(i) of this section are not appropriate is if previous test data are available that show a greater than 20 percent discrepancy between the test value and the estimated value. An engineering assessment includes, but is not limited to, the following:

(A) Previous test results, provided the tests are representative of current operating practices at the process unit.

(B) Bench-scale or pilot-scale test data representative of the process under representative operating conditions.

(C) Maximum flow rate, HAP emission rate, concentration, or other relevant parameter specified or implied within a permit limit applicable to the process vent.

(D) Design analysis based on accepted chemical engineering principles, measurable process parameters, or physical or chemical laws or properties. Examples of analytical methods include, but are not limited to:

(*1*) Use of material balances based on process stoichiometry to estimate maximum organic HAP concentrations.

(*2*) Estimation of maximum flow rate based on physical equipment design such as pump or blower capacities.

(*3*) Estimation of HAP concentrations based on saturation conditions.

(E) All data, assumptions, and procedures used in the engineering assessment shall be documented in accordance with §63.1260(e). Data or other information supporting a finding that the emissions estimation equations are inappropriate shall be reported in the Precompliance report.

(3) *Controlled emissions.* An owner or operator shall determine controlled emissions using the procedures in either paragraph (d)(3)(i) or (ii) of this section.

(i) *Small control devices.* Except for condensers, controlled emissions for each process vent that is controlled using a small control device shall be determined by using the design evaluation described in paragraph (d)(3)(i)(A) of this section, or conducting a performance test in accordance with paragraph (d)(3)(ii) of this section. Whenever a small control device becomes a large control device, the owner or operator must comply with the provisions in paragraph (d)(3)(ii) of this section and submit the test report in the next Periodic report.

(A) *Design evaluation.* The design evaluation shall include documentation demonstrating that the control device being used achieves the required control efficiency under worst-case conditions, as determined from the emission profile described in §63.1257(b)(8)(ii). The control efficiency determined from this design evaluation shall be applied to uncontrolled emissions to estimate controlled emissions. The documentation must be conducted in accordance with the provisions in paragraph (a)(1) of this section. The design evaluation shall also include the value(s) and basis for the parameter(s) monitored under §63.1258.

(B) *Emission estimation equations.* An owner or operator using a condenser as a control device shall determine controlled emissions using exhaust gas temperature measurements and calculations for each batch emission episode within each unit operation according to the engineering methodology in paragraphs (d)(3)(i)(B)(*1*) through (*8*) of this section. Individual HAP partial pressures shall be calculated as specified in paragraph (d)(2)(i) of this section.

(*1*) Emissions from vapor displacement shall be calculated using Equation 11 of this subpart with T set equal to the temperature of the receiver and the HAP partial pressures determined at the temperature of the receiver.

(*2*) Emissions from purging shall be calculated using Equation 12 of this subpart with T set equal to the temperature of the receiver and the HAP partial pressures determined at the temperature of the receiver.

(*3*) Emissions from heating shall be calculated using either Equation 13 of this subpart or Equation 37 of this subpart. In Equation 13, the HAP vapor pressures shall be determined at the temperature of the receiver. In Equations 13 and 37 of this subpart, Δη is equal to the number of moles of noncondensable displaced from the vessel, as calculated using Equation 15 of this subpart. In Equations 13 and 37 of this subpart, the HAP average molecular weight shall be calculated using Equation 17 with the HAP partial pressures determined at the temperature of the receiver.

$$E = \Delta\eta \times \frac{\sum_{i=1}^{n} P_i}{P_T - \sum_{j=1}^{n} P_j} \times MW_{HAP} \quad (Eq.37)$$

Where:

E = mass of HAP emitted

Δη = moles of noncondensable gas displaced

P_T= pressure in the receiver

P_i= partial pressure of the individual HAP at the receiver temperature

P_j= partial pressure of the individual condensable (including HAP) at the receiver temperature

n = number of HAP compounds in the emission stream

i = identifier for a HAP compound

MW_{HAP}= the average molecular weight of HAP in vapor exiting the receiver, as calculated using Equation 17 of this subpart

m = number of condensable compounds (including HAP) in the emission stream

(*4*)(*i*) Emissions from depressurization shall be calculated using Equation 38 of this subpart.

$$E = \left(V_{nc1} - V_{nc2}\right) \times \frac{\sum_{i=1}^{n}\left(P_i\right)}{P_T - \sum_{j=1}^{m}\left(P_j\right)} \times \frac{P_T}{RT} \times MW_{HAP} \qquad (Eq.\ 38)$$

Where:

E = mass of HAP vapor emitted

V_{nc1}= initial volume of noncondensable in the vessel, corrected to the final pressure, as calculated using Equation 39 of this subpart

V_{nc2}= final volume of noncondensable in the vessel, as calculated using Equation 40 of this subpart

P_i= partial pressure of each individual HAP at the receiver temperature

P_j= partial pressure of each condensable (including HAP) at the receiver temperature

P_T= receiver pressure

T = temperature of the receiver

R = ideal gas law constant

MW_{HAP}= the average molecular weight of HAP calculated using Equation 17 of this subpart with partial pressures determined at the receiver temperature

i = identifier for a HAP compound

n = number of HAP compounds in the emission stream

m = number of condensable compounds (including HAP) in the emission stream

j = identifier for a condensable compound

(*ii*) The initial and final volumes of noncondensable gas present in the vessel, adjusted to the pressure of the receiver, are calculated using Equations 39 and 40 of this subpart.

$$V_{nc1} = \frac{VP_{nc_1}}{P_T} \qquad (Eq.\ 39) \quad V_{nc2} = \frac{VP_{nc_2}}{P_T} \qquad (Eq.\ 40)$$

Where:

V_{nc1}= initial volume of noncondensable gas in the vessel

V_{nc2}= final volume of noncondensable gas in the vessel

V = free volume in the vessel being depressurized

P_{nc1}= initial partial pressure of the noncondensable gas, as calculated using Equation 41 of this subpart

P_{nc2}= final partial pressure of the noncondensable gas, as calculated using Equation 42 of this subpart

P_T= pressure of the receiver

(*iii*) Initial and final partial pressures of the noncondensable gas in the vessel are determined using Equations 41 and 42 of this subpart.

$$P_{nc1} = P_1 - \sum_{j=1}^{m} P_j \qquad (Eq.\ 41) \qquad P_{nc2} = P_2 - \sum_{j=1}^{m} P_j \qquad (Eq.\ 42)$$

Where:

P_{nc1}= initial partial pressure of the noncondensable gas in the vessel

P_{nc2}= final partial pressure of the noncondensable gas in the vessel

P_1= initial vessel pressure

P_2= final vessel pressure

P_j= partial pressure of each condensable compound (including HAP) in the vessel

m = number of condensable compounds (including HAP) in the emission stream

j = identifier for a condensable compound

(*5*) Emissions from vacuum systems shall be calculated using Equation 33 of this subpart.

(*6*) Emissions from gas evolution shall be calculated using Equation 12 with V calculated using Equation 34 of this subpart, T set equal to the receiver temperature, and the HAP partial pressures determined at the receiver temperature. The term for time, t, in Equation 12 of this subpart is not needed for the purposes of this calculation.

(*7*) Emissions from air drying shall be calculated using Equation 11 of this subpart with V equal to the air flow rate and $P_i$determined at the receiver temperature.

(*8*) Emissions from empty vessel purging shall be calculated using equation 43 of this subpart:

$$E = \frac{V}{R}\left(\left(\sum_{i=1}^{n}\frac{(P_i)_{T_1}(MW_i)}{T_1}\right)\left(-e^{-Pt/V}\right) - \left(\sum_{i=1}^{n}\frac{(P_i)_{T_2}(MW_i)}{T_2}\right)\left(\ln\left(\frac{\sum_{i=1}^{n}(P_i)_{T_2}}{\sum_{i=1}^{n}(P_i)_{T_1}}\right)+1\right)\right) \qquad (Eq.\ 43)$$

Where:

V = volume of empty vessel

R = ideal gas law constant

T_1= temperature of the vessel vapor space at beginning of purge

T_2= temperature of the receiver, absolute

$(P_i)_{T1}$= partial pressure of the individual HAP at the beginning of the purge

$(P_i)_{T2}$= partial pressure of the individual HAP at the receiver temperature

MW_i= molecular weight of the individual HAP

F = flowrate of the purge gas

t = duration of the purge

n = number of HAP compounds in the emission stream

i = identifier for a HAP compound

(ii) *Large control devices.* Except for condensers, controlled emissions for each process vent that is controlled using a large control device shall be determined by applying the control efficiency of the large control device to the estimated uncontrolled emissions. The control efficiency shall be determined by conducting a performance test on the control device as described in paragraphs (d)(3)(ii)(A) through (C) of this section, or by using the results of a previous performance test as described in paragraph (d)(4) of this section. If the control device is intended to control only hydrogen halides and halogens, the owner or operator may assume the control efficiency of organic HAP is zero percent. If the control device is intended to control only organic HAP, the owner or operator may assume the control efficiency for hydrogen halides and halogen is zero percent. Owners and operators are not required to conduct performance tests for devices described in paragraphs (a)(4) and (d)(4) of this section that are large control devices, as defined in §63.1251.

(A) The performance test shall be conducted by performing emission testing on the inlet and outlet of the control device following the test methods and procedures of §63.1257(b). Concentrations shall be calculated from the data obtained through emission testing according to the procedures in paragraph (a)(2) of this section.

(B) Performance testing shall be conducted under absolute, or hypothetical worst-case conditions, as defined in paragraphs (b)(8)(i)(A) through (B) of this section.

(C) The owner or operator may elect to conduct more than one performance test on the control device for the purpose of establishing more than one operating condition at which the control device achieves the required control efficiency.

(iii) *Initial compliance demonstration for condensers* —(A) *Air pollution control devices.* During periods in which a condenser functions as an air pollution control device, controlled emissions shall be calculated using the emission estimation equations described in paragraph (d)(3)(i)(B) of this section.

(B) *Process condensers.* During periods when the condenser is operating as a process condenser, the owner or operator is required to demonstrate that the process condenser is properly operated if the process condenser meets either of the criteria described in paragraphs (d)(3)(iii)(B)(*1*) and (*2*) of this section. The owner or operator must either measure the condenser exhaust gas temperature and show it is less than the boiling or bubble point of the substance(s) in the vessel, or perform a material balance around the vessel and condenser to show that at least 99 percent of the material vaporized while boiling is condensed. The initial demonstration shall be conducted for all appropriate operating scenarios and documented in the Notification of Compliance Status report described in §63.1260(f).

(*1*) The process condenser is not followed by an air pollution control device; or

(*2*) The air pollution control device following the process condenser is not a condenser or is not meeting the alternative standard of §63.1254(c).

(4) An owner or operator is not required to conduct a performance test for the following:

(i) Any control device for which a previous performance test was conducted, provided the test was conducted using the same procedures specified in §63.1257(b) over conditions typical of the appropriate worst-case, as defined in §63.1257(b)(8)(i). The results of the previous performance test shall be used to demonstrate compliance.

(e) *Compliance with wastewater provisions* —(1) *Determining annual average concentration and annual load.* To determine the annual average concentration and annual load of partially soluble and/or soluble HAP compounds in a wastewater stream, as required by §63.1256(a)(1), an owner or operator shall comply with the provisions in paragraphs (e)(1)(i) through (iii) of this section. A wastewater stream is exempt from the requirements of §63.1256(a)(2) if the owner or operator determines the annual average concentration and annual load are below all of the applicability cutoffs specified in §63.1256(a)(1)(i)(A) through (D). For annual average concentration, only initial rinses are included. Concentration measurements based on Method 305 shall be adjusted by dividing each concentration by the compound-specific Fm factor listed in Table 8 of this subpart. Concentration measurements based on methods other than Method 305 may not be adjusted by the compound-specific Fm factor listed in Table 8 of this subpart.

(i) *Annual average concentration definition.* (A) When complying with §63.1256(a)(1)(i)(A), the annual average concentration means the total mass of partially soluble HAP compounds occurring in the wastewater stream during the calendar year divided by the total mass of the wastewater stream discharged during the same calendar year.

(B) When complying with §63.1256(a)(1)(i) (B) or (C), the annual average concentration means the total mass of partially soluble and/or soluble HAP compounds occurring in the wastewater stream during the calendar year divided by the total mass of the wastewater stream discharged during the same calendar year.

(C) When complying with §63.1256(a)(1)(i)(D), the annual average concentration means the total mass of soluble HAP compounds occurring in the wastewater stream during the calendar year divided by the total mass of the wastewater stream discharged during the same calendar year.

(ii) *Determination of annual average concentration.* An owner or operator shall determine annual average concentrations of partially soluble and/or soluble HAP compounds in accordance with the provisions specified in paragraph (e)(1)(ii)(A), (B), or (C) of this section. The owner or operator may determine annual average concentrations by process simulation. Data and other information supporting the simulation shall be reported in the Precompliance Report for approval by the Administrator. The annual average concentration shall be determined either at the POD or downstream of the POD with adjustment for concentration changes made according to paragraph (e)(1)(ii)(D) of this section.

(A) *Test methods.* The concentration of partially soluble HAP, soluble HAP, or total HAP shall be measured using any of the methods described in paragraphs (b)(10)(i) through (iv) of this section.

(B) *Knowledge of the wastewater stream.* The concentration of partially soluble HAP, soluble HAP, or total HAP shall be calculated based on knowledge of the wastewater stream according to the procedures in paragraphs (e)(1)(ii)(B)(*1*) and (*2*) of this section. The owner or operator shall document concentrations in the Notification of Compliance Status report described in §63.1260(f).

(*1*) *Mass balance.* The owner or operator shall calculate the concentrations of HAP compounds in wastewater considering the total quantity of HAP discharged to the water, the amount of water at the POD, and the amounts of water and solvent lost to other mechanisms such as reactions, air emissions, or uptake in product or other processing materials. The quantities of HAP and water shall be based on batch sheets, manufacturing tickets, or FDA bills of materials. In cases where a chemical reaction occurs that generates or consumes HAP, the amount of HAP remaining after a reaction shall be based on stoichometry assuming 100 percent theoretical consumption or yield, as applicable.

(*2*) *Published water solubility data.* For single components in water, owners and operators may use the water solubilities published in standard reference texts at the POD temperature to determine maximum HAP concentration.

(C) *Bench scale or pilot-scale test data.* The concentration of partially soluble HAP, soluble HAP, or total HAP shall be calculated based on bench scale or pilot-scale test data. The owner or operator shall provide sufficient information to demonstrate that the bench-scale or pilot-scale test concentration data are representative of actual HAP concentrations. The owner or operator shall also provide documentation describing the testing protocol, and the means by which sample variability and analytical variability were accounted for in the determination of HAP concentrations. Documentation of the pilot-scale or bench scale analysis shall be provided in the precompliance report.

(D) *Adjustment for concentrations determined downstream of the POD.* The owner or operator shall make corrections to the annual average concentration when the concentration is determined downstream of the POD at a location where: two or more wastewater streams have been mixed; one or more wastewater streams have been treated; or, losses to the atmosphere have occurred. The owner or operator shall make the adjustments either to the individual data points or to the final annual average concentration.

(iii) *Determination of annual load.* An owner or operator shall calculate the partially soluble and/or soluble HAP load in a wastewater stream based on the annual average concentration determined in paragraph (e)(1)(ii) (A), (B), or (C) of this section and the total volume of the wastewater stream, based on knowledge of the wastewater stream in accordance with paragraphs (e)(1)(ii)(B) of this section. The owner or operator shall maintain records of the total liters of wastewater discharged per year as specified in §63.1259(b).

(2) *Compliance with treatment unit control provisions* —(i) *Performance tests and design evaluations-general.* To comply with the control options in §63.1256(g) (10) or (13), neither a design evaluation nor a performance test is required. For any other nonbiological treatment process, the owner or operator shall conduct either a design evaluation as specified in paragraph (e)(2)(ii) of this section, or a performance test as specified in paragraph (e)(2)(iii) of this section to demonstrate that each nonbiological treatment process used to comply with §63.1256(g) (8), (9), and/or (12) achieves the conditions specified for compliance. The owner or operator shall demonstrate by the procedures in either paragraph (e)(2) (ii) or (iii) of this section that each closed biological treatment process used to comply with §63.1256 (g)(8)(ii), (g)(9)(ii), (g)(11), or (g)(12) achieves the conditions specified for compliance. If an open biological treatment unit is used to comply with §63.1256 (g)(8)(ii), (g)(9)(ii), (g)(11), or (g)(12), the owner or operator shall comply with the performance test requirements in paragraph (e)(2)(iii) of this section.

(ii) *Design evaluation.* A design evaluation and supporting documentation that addresses the operating characteristics of the treatment process and that is based on operation at a wastewater stream flow rate and a concentration under which it would be most difficult to demonstrate compliance. For closed biological treatment processes, the percent reduction from removal/destruction in the treatment unit and control device shall be determined by a mass balance over the unit. The mass flow rate of soluble and/or partially soluble HAP compounds exiting the treatment process shall be the sum of the mass flow rate of soluble and/or partially soluble HAP compounds in the wastewater stream exiting the biological treatment process and the mass flow rate of the vented gas stream exiting the control device. The mass flow rate entering the treatment process minus the mass flow rate exiting the process determines the actual mass removal. Compounds that meet the requirements specified in paragraph (e)(2)(iii)(A)(*4*) of this section are not required to be included in the design evaluation; the term “performance test” in paragraph (e)(2)(iii)(A)(*4*) of this section shall mean “design evaluation” for the purposes of this paragraph.

(iii) *Performance tests.* Performance tests shall be conducted using test methods and procedures that meet the applicable requirements specified in paragraphs (e)(2)(iii)(A) through (G) of this section.

(A) *General.* This paragraph specifies the general procedures for performance tests that are conducted to demonstrate compliance of a treatment process with the control requirements specified in §63.1256(g).

(*1*) *Representative process unit operating conditions.* Compliance shall be demonstrated for representative operating conditions. Operations during periods of malfunction and periods of nonoperation shall not constitute representative conditions. The owner or operator shall record the process information that is necessary to document operating conditions during the test.

(*2*) *Representative treatment process operating conditions.* Performance tests shall be conducted when the treatment process is operating at a representative inlet flow rate and concentration. If the treatment process will be operating at several different sets of representative operating conditions, the owner or operator shall comply with paragraphs (e)(2)(iii)(A)(*2*)(*i*) and (*ii*) of this section. The owner or operator shall record information that is necessary to document treatment process or control device operating conditions during the test.

(*i*) *Range of operating conditions.* If the treatment process will be operated at several different sets of representative operating conditions, performance testing over the entire range is not required. In such cases, the performance test results shall be supplemented with modeling and/or engineering assessments to demonstrate performance over the operating range.

(*ii*) *Consideration of residence time.* If concentration and/or flow rate to the treatment process are not relatively constant (i.e., comparison of inlet and outlet data will not be representative of performance), the owner or operator shall consider residence time, when determining concentration and flow rate.

(*3*) *Testing equipment.* All testing equipment shall be prepared and installed as specified in the applicable test methods, or as approved by the Administrator.

(*4*) *Compounds not required to be considered in performance tests.* Compounds that meet the requirements specified in (e)(2)(iii)(A)(*4*)(*i*), (*ii*), or (*iii*) of this section are not required to be included in the performance test. Concentration measurements based on Method 305 shall be adjusted by dividing each concentration by the compound-specific Fm factor listed in Table 8 of this subpart. Concentration measurements based on methods other than Method 305 shall not be adjusted by the compound-specific Fm factor listed in Table 8 of this subpart.

(*i*) Compounds not used or produced by the PMPU; or

(*ii*) Compounds with concentrations at the POD that are below 1 ppmw; or

(*iii*) Compounds with concentrations at the POD that are below the lower detection limit where the lower detection limit is greater than 1 ppmw. The method shall be an analytical method for wastewater which has the compound of interest as a target analyte.

(*5*) *Treatment using a series of treatment processes.* In all cases where the wastewater provisions in this subpart allow or require the use of a treatment process to comply with emissions limitations, the owner or operator may use multiple treatment processes. The owner or operator complying with the requirements of §63.1256(g)(7)(i), when wastewater is conveyed by hard-piping, shall comply with either paragraph (e)(2)(iii)(A)(*5*)(*i*) or (*ii*) of this section. The owner or operator complying with the requirements of §63.1256(g)(7)(ii) shall comply with the requirements of paragraph (e)(2)(iii)(A)(*5*)(*ii*) of this section.

(*i*) The owner or operator shall conduct the performance test across each series of treatment processes. For each series of treatment processes, inlet concentration and flow rate shall be measured either where the wastewater enters the first treatment process in a series of treatment processes, or prior to the first treatment process as specified in paragraph (e)(2)(iii)(A)(*6*) of this section. For each series of treatment processes, outlet concentration and flow rate shall be measured where the wastewater exits the last treatment process in the series of treatment processes, except when the last treatment process is an open or a closed aerobic biological treatment process demonstrating compliance by using the procedures in paragraphs (e)(2)(iii)(E) or (F) of this section. When the last treatment process is either an open or a closed aerobic biological treatment process demonstrating compliance by using the procedures in paragraphs (e)(2)(iii)(E) or (F) of this section, inlet and outlet concentrations and flow rates shall be measured at the inlet and outlet to the series of treatment processes prior to the biological treatment process and at the inlet to the biological treatment process, except as provided in paragraph (e)(2)(iii)(A)(6)(ii) of this section. The mass flow rate destroyed in the biological treatment process for which compliance is demonstrated using paragraph (e)(2)(iii)(E) or (F) of this section shall be added to the mass flow rate removed or destroyed in the series of treatment units before the biological treatment unit. This sum shall be used to calculate the overall control efficiency.

(*ii*) The owner or operator shall conduct the performance test across each treatment process in the series of treatment processes. The mass flow rate removed or destroyed by each treatment process shall be added together and the overall control efficiency calculated to determine whether compliance has been demonstrated using paragraphs (e)(2)(iii)(C), (D), (E), (F), or (G) of this section, as applicable. If a biological treatment process is one of the treatment processes in the series of treatment processes, the inlet to the biological treatment process shall be the point at which the wastewater enters the biological treatment process, or the inlet to the equalization tank if all the criteria of paragraph (e)(2)(iii)(A)(*6*)(*ii*) of this section are met.

(*6*) The owner or operator determining the inlet for purposes of demonstrating compliance with paragraph (e)(2)(iii)(E), or (F)of this section may elect to comply with paragraph (e)(2)(iii)(A)(*6*)(*i*) or (*ii*) of this section.

(*i*) When wastewater is conveyed exclusively by hard-piping from the point of determination to a treatment process that is either the only treatment process or the first in a series of treatment processes (i.e., no treatment processes or other waste management units are used upstream of this treatment process to store, handle, or convey the wastewater), the inlet to the treatment process shall be at any location from the point of determination to where the wastewater stream enters the treatment process. When samples are taken upstream of the treatment process and before wastewater streams have converged, the owner or operator shall ensure that the mass flow rate of all affected wastewater is accounted for when using §63.1256(g)(8)(ii), (g)(9)(ii) or (g)(12) of this subpart to comply and that the mass flow rate of all wastewater, not just affected wastewater, is accounted for when using §63.1256(g)(11) to comply, except as provided in paragraph (e)(2)(iii)(A)(*4*) of this section.

(*ii*) The owner or operator may consider the inlet to the equalization tank as the inlet to the biological treatment process if the wastewater is conveyed by hard-piping from either the last previous treatment process or the point of determination to the equalization tank; or the wastewater is conveyed from the equalization tank exclusively by hard-piping to the biological treatment process and no treatment processes or other waste management units are used to store, handle, or convey the wastewater between the equalization tank and the biological treatment process; or the equalization tank is equipped with a fixed roof and a closed-vent system that routes emissions to a control device that meets the requirements of §63.1256(b)(1)(i) through (iv) and §63.1256(b)(2)(i). The outlet from the series of treatment processes prior to the biological treatment process is the point at which the wastewater exits the last treatment process in the series prior to the equalization tank, if the equalization tank and biological treatment process are part of a series of treatment processes. The owner or operator shall ensure that the mass flow rate of all affected wastewater is accounted for when using §63.1256(g)(9)(ii) or (12) to comply and that the mass flow rate of all wastewater, not just affected wastewater is accounted for when using §63.1256(g)(11) to comply, except as provided in paragraph (e)(2)(iii)(A)(*4*) of this section.

(B) *Noncombustion treatment process—concentration limits.* This paragraph applies to performance tests that are conducted to demonstrate compliance of a noncombustion treatment process with the ppmw wastewater stream concentration limits at the outlet of the treatment process. This compliance option is specified in §63.1256(g)(8)(i) and (9)(i). Wastewater samples shall be collected using sampling procedures which minimize loss of organic compounds during sample collection and analysis and maintain sample integrity per paragraph (b)(10)(vi) of this section. Samples shall be collected and analyzed using the procedures specified in paragraphs (b)(10)(i) through (vi) of this section. Samples may be grab samples or composite samples. Samples shall be taken at approximately equally spaced time intervals over a 1-hour period. Each 1-hour period constitutes a run, and the performance test shall consist of a minimum of three runs. Concentration measurements based on methods other than Method 305 may be adjusted by multiplying each concentration by the compound-specific Fm factor listed in Table 8 of this subpart. (For affected wastewater streams that contains both partially soluble and soluble HAP compounds, compliance is demonstrated only if the sum of the concentrations of partially soluble HAP compounds is less than 50 ppmw, and the sum of the concentrations of soluble HAP compounds is less than 520 ppmw.)

(C) *Noncombustion, nonbiological treatment process: percent mass removal/destruction option.* This paragraph applies to performance tests that are conducted to demonstrate compliance of a noncombustion, nonbiological treatment process with the percent mass removal limits specified in §63.1256(g)(8)(ii) and (9)(ii) for partially soluble and soluble HAP compounds, respectively. The owner or operator shall comply with the requirements specified in paragraphs (e)(2)(iii)(C)(*1*) through (*5*) of this section.

(*1*) *Concentration.* The concentration of partially soluble and/or soluble HAP compounds entering and exiting the treatment process shall be determined as provided in this paragraph. Wastewater samples shall be collected using sampling procedures which minimize loss of organic compounds during sample collection and analysis and maintain sample integrity per paragraph (b)(10)(vi) of this section. The method shall be an analytical method for wastewater which has the compound of interest as a target analyte. Samples may be grab samples or composite samples. Samples shall be taken at approximately equally spaced time intervals over a 1-hour period. Each 1-hour period constitutes a run, and the performance test shall consist of a minimum of three runs. Concentration measurements based on Method 305 shall be adjusted by dividing each concentration by the compound-specific Fm factor listed in Table 8 of this subpart. Concentration measurements based on methods other than Method 305 shall not be adjusted by the compound-specific Fm factor listed in Table 8 of this subpart.

(*2*) *Flow rate.* The flow rate of the entering and exiting wastewater streams shall be determined using inlet and outlet flow meters, respectively. Where the outlet flow is not greater than the inlet flow, a single flow meter may be used, and may be used at either the inlet or outlet. Flow rate measurements shall be taken at the same time as the concentration measurements.

(*3*) *Calculation of mass flow rate—for noncombustion, nonbiological treatment processes.* The mass flow rates of partially soluble and/or soluble HAP compounds entering and exiting the treatment process are calculated using Equations 44 and 45 of this subpart.

$$QMW_a = \frac{\rho}{p * 10^6}\left(\sum_{k=1}^{p}\left(Q_{a,k} * C_{T,a,k}\right)\right) \qquad (Eq.\ 44)$$

$$QMW_b = \frac{\rho}{p * 10^6}\left(\sum_{k=1}^{p}\left(Q_{b,k} * C_{T,b,k}\right)\right) \qquad (Eq.\ 45)$$

Where:

QMW_a, QMW_b= mass flow rate of partially soluble or soluble HAP compounds, average of all runs, in wastewater entering (QMW_a) or exiting (QMW_b) the treatment process, kg/hr

ρ = density of the wastewater, kg/m^3

$Q_{a,k}$, $Qb_{b,k}$= volumetric flow rate of wastewater entering ($Q_{a,k}$) or exiting ($Q_{b,k}$) the treatment process during each run k, m^3 /hr

$C_{T,a,k}$, $C_{T,b,k}$= total concentration of partially soluble or soluble HAP compounds in wastewater entering ($C_{T,a,k}$) or exiting ($C_{T,b,k}$) the treatment process during each run k, ppmw

p = number of runs

k = identifier for a run

10^6 = conversion factor, mg/kg

(*4*) *Percent removal calculation for mass flow rate.* The percent mass removal across the treatment process shall be calculated as follows:

$$E = \frac{QMW_a - QMW_b}{QMW_a} \times 100 \qquad (Eq.\ 46)$$

Where:

E = removal or destruction efficiency of the treatment process, percent

QMW_a, QMW_b= mass flow rate of partially soluble or soluble HAP compounds in wastewater entering (QMW_a) and exiting (QMW_b) the treatment process, kg/hr (as calculated using Equations 44 and 45 of this subpart)

(*5*) *Compare mass removal efficiency to required efficiency.* Compare the mass removal efficiency (calculated in Equation 46 of this subpart) to the required efficiency as specified in §63.1256(g)(8)(ii) or (9)(ii). If complying with §63.1256(g)(8)(ii), compliance is demonstrated if the mass removal efficiency is 99 percent or greater. If complying with §63.1256(g)(9)(ii), compliance is demonstrated if the mass removal efficiency is 90 percent or greater.

(D) *Combustion treatment processes: percent mass removal/destruction option.* This paragraph applies to performance tests that are conducted to demonstrate compliance of a combustion treatment process with the percent mass destruction limits specified in §63.1256(g)(8)(ii) for partially soluble HAP compounds, and/or §63.1256(g)(9)(ii) for soluble HAP compounds. The owner or operator shall comply with the requirements specified in paragraphs (e)(2)(iii)(D)(*1*) through (*8*) of this section.

(*1*) *Concentration in wastewater stream entering the combustion treatment process.* The concentration of partially soluble and/or soluble HAP compounds entering the treatment process shall be determined as provided in this

paragraph. Wastewater samples shall be collected using sampling procedures which minimize loss of organic compounds during sample collection and analysis and maintain sample integrity per paragraph (b)(10)(vi) of this section. The method shall be an analytical method for wastewater which has the compound of interest as a target analyte. Samples may be grab samples or composite samples. Samples shall be taken at approximately equally spaced time intervals over a 1-hour period. Each 1-hour period constitutes a run, and the performance test shall consist of a minimum of three runs. Concentration measurements based on Method 305 of appendix A of this part shall be adjusted by dividing each concentration by the compound-specific Fm factor listed in Table 8 of this subpart. Concentration measurements based on methods other than Method 305 shall not be adjusted by the compound-specific Fm factor listed in Table 8 of this subpart.

(*2*) *Flow rate of wastewater entering the combustion treatment process.* The flow rate of the wastewater stream entering the combustion treatment process shall be determined using an inlet flow meter. Flow rate measurements shall be taken at the same time as the concentration measurements.

(*3*) *Calculation of mass flow rate in wastewater stream entering combustion treatment processes.* The mass flow rate of partially soluble and/or soluble HAP compounds entering the treatment process is calculated as follows:

$$QMW_a = \frac{\rho}{p * 10^6}\left(\sum_{k=1}^{p}\left(Q_{a,k} * C_{T,a,k}\right)\right) \qquad (Eq.\ 47)$$

Where:

QMW_a= mass flow rate of partially soluble or soluble HAP compounds entering the combustion unit, kg/hr

ρ = density of the wastewater stream, kg/m^3

$Q_{a,k}$= volumetric flow rate of wastewater entering the combustion unit during run k, m^3 /hr

$C_{T,a,k}$= total concentration of partially soluble or soluble HAP compounds in the wastewater stream entering the combustion unit during run k, ppmw

k = identifier for a run

p = number of runs

(*4*) *Concentration in vented gas stream exiting the combustion treatment process.* The concentration of partially soluble and/or soluble HAP compounds (or TOC) exiting the combustion treatment process in any vented gas stream shall be determined as provided in this paragraph. Samples may be grab samples or composite samples. Samples shall be taken at approximately equally spaced time intervals over a 1-hour period. Each 1-hour period constitutes a run, and the performance test shall consist of a minimum of three runs. Concentration measurements shall be determined using Method 18 of 40 CFR part 60, appendix A. Alternatively, any other test method validated according to the procedures in Method 301 of appendix A of this part may be used.

(*5*) *Volumetric flow rate of vented gas stream exiting the combustion treatment process.* The volumetric flow rate of the vented gas stream exiting the combustion treatment process shall be determined using Method 2, 2A, 2C, or 2D of 40 CFR part 60, appendix A, as appropriate. Volumetric flow rate measurements shall be taken at the same time as the concentration measurements.

(*6*) *Calculation of mass flow rate of vented gas stream exiting combustion treatment processes.* The mass flow rate of partially soluble and/or soluble HAP compounds in a vented gas stream exiting the combustion treatment process shall be calculated as follows:

$$QMG_b = K_2 * \left(\sum_{i=1}^{n}\left(CG_{b,i} * MW_i\right)\right) * QG_b \qquad (Eq.\ 48)$$

Where:

QMG_b= mass rate of TOC (minus methane and ethane) or total partially soluble and/or soluble HAP, in vented gas stream, exiting (QMG_b) the combustion device, dry basis, kg/hr

$CG_{b,i}$= concentration of TOC (minus methane and ethane) or total partially soluble and/or soluble HAP, in vented gas stream, exiting ($CG_{b,i}$) the combustion device, dry basis, ppmv

MW_i= molecular weight of a component, kilogram/kilogram-mole

QG_b= flow rate of gas stream exiting (QG_b) the combustion device, dry standard cubic meters per hour

K_2= constant, 41.57×10^{-9}(parts per million)$^{-1}$(gram-mole per standard cubic meter) (kilogram/gram), where standard temperature (gram-mole per standard cubic meter) is 20 °C

i = identifier for a compound

n = number of components in the sample

(*7*) *Destruction efficiency calculation.* The destruction efficiency of the combustion unit for partially soluble and/or soluble HAP compounds shall be calculated as follows:

$$E = \frac{QMW_a - QMG_b}{QMW_a} * 100 \qquad (Eq.\ 49)$$

Where:

E = destruction efficiency of partially soluble or soluble HAP compounds for the combustion unit, percent

QMW^{2a} = mass flow rate of partially soluble or soluble HAP compounds entering the combustion unit, kg/hr

QMG_b= mass flow rate of TOC (minus methane and ethane) or partially soluble and/or soluble HAP compounds in vented gas stream exiting the combustion treatment process, kg/hr

(*8*) *Compare mass destruction efficiency to required efficiency.* Compare the mass destruction efficiency (calculated in Equation 49 of this subpart) to the required efficiency as specified in §63.1256(g)(8)(ii) or (g)(9)(ii). If complying with §63.1256(g)(8)(ii), compliance is demonstrated if the mass destruction efficiency is 99 percent or greater. If complying with §63.1256(g)(9)(ii), compliance is demonstrated if the mass destruction efficiency is 90 percent or greater.

(E) *Open or closed aerobic biological treatment processes: 95-percent mass destruction option.* This paragraph applies to performance tests that are conducted for open or closed aerobic biological treatment processes to demonstrate compliance with the 95-percent mass destruction provisions in §63.1256(g)(11) for partially soluble and/or soluble HAP compounds.

(*1*) *Concentration in wastewater stream.* The concentration of partially soluble and/or soluble HAP as provided in this paragraph. Concentration measurements to determine E shall be taken as provided in paragraph (e)(2)(iii)(A)(*5*) of this section for a series of treatment processes. Wastewater samples shall be collected using sampling procedures which minimize loss of organic compounds during sample collection and analysis and maintain sample integrity per paragraph (b)(10)(vi) of this section. The method shall be an analytical method for wastewater which has the compound of interest as a target analyte. Samples may be grab samples or composite samples. Samples shall be taken at approximately equally spaced time intervals over a 1-hour period. Each 1-hour period constitutes a run, and the performance test shall consist of a minimum of three runs. Concentration measurements based on Method 305

shall be adjusted by dividing each concentration by the compound-specific Fm factor listed in Table 8 of this subpart. Concentration measurements based on methods other than Method 305 shall not be adjusted by the compound-specific Fm factor listed in Table 8 of this subpart.

(*2*) *Flow rate.* Flow rate measurements to determine E shall be taken as provided in paragraph (e)(2)(iii)(A)(*5*) of this section for a series of treatment processes. Flow rate shall be determined using inlet and outlet flow measurement devices. Where the outlet flow is not greater than the inlet flow, a single flow measurement device may be used, and may be used at either the inlet or outlet. Flow rate measurements shall be taken at the same time as the concentration measurements.

(*3*) *Destruction efficiency.* The owner or operator shall comply with the provisions in either paragraph (e)(2)(iii)(E)(*3*)(*i*) or (*ii*) of this section. Compliance is demonstrated if the destruction efficiency, E, is equal to or greater than 95 percent.

(*i*) If the performance test is performed across the open or closed biological treatment system only, compliance is demonstrated if E is equal to F_{bio}, where E is the destruction efficiency of partially soluble and/or soluble HAP compounds and $F_{bio}$is the site-specific fraction of partially soluble and/or soluble HAP compounds biodegraded. F_{bio}shall be determined as specified in paragraph (e)(2)(iii)(E)(*4*) of this section and appendix C of subpart G of this part.

(*ii*) If compliance is being demonstrated in accordance with paragraphs (e)(2)(iii)(A)(*5*)(*i*) or (*ii*) of this section, the removal efficiency shall be calculated using Equation 50 of this subpart. When complying with paragraph (e)(2)(iii)(A)(*5*)(*i*) of this section, the series of nonbiological treatment processes comprise one treatment process segment. When complying with paragraph (e)(2)(iii)(A)(*5*)(*ii*) of this section, each nonbiological treatment process is a treatment process segment.

$$E = \frac{\text{Nonbiotreatment HAP load removal} + \text{Biotreatment HAP load removal}}{\text{Total influent HAP load}} = \frac{\left(\sum_{i=1}^{n}\left(QMW_{a,i} - QMW_{b,i}\right)\right) + QMW_{bio} * F_{bio}}{QMW_{all}} \quad (Eq.\ 50)$$

Where:

$QMW_{a,i}$= the soluble and/or partially soluble HAP load entering a treatment process segment

$QMW_{b,i}$= the soluble and/or partially soluble HAP load exiting a treatment process segment

n = the number of treatment process segments

i = identifier for a treatment process element

QMW_{bio}= the inlet load of soluble and/or partially soluble HAP to the biological treatment process. The inlet is defined in accordance with paragraph (e)(2)(iii)(A)(*6*) of this section. If complying with paragraph (e)(2)(iii)(A)(*6*)(*ii*) of this section, $QMW_{bio}$is equal to $QMW_{b,n}$

F_{bio}= site-specific fraction of soluble and/or partially soluble HAP compounds biodegraded. F_{bio}shall be determined as specified in paragraph (e)(2)(iii)(E)(*4*) of this section and Appendix C of subpart G of this part.

QMW_{all}= the total soluble and/or partially soluble HAP load to be treated.

(*4*) *Site-specific fraction biodegraded* (F_{bio} *).* The procedures used to determine the compound-specific kinetic parameters for use in calculating F_{bio}differ for the compounds listed in Tables 2 and 3 of this subpart. An owner or operator shall calculate F_{bio}as specified in either paragraph (e)(2)(iii)(E)(*4*)(*i*) or (*ii*) of this section.

(*i*) For biological treatment processes that do not meet the definition for enhanced biological treatment in §63.1251, the owner or operator shall determine the $F_{bio}$for the compounds in Tables 2 and 3 of this subpart using any of the procedures in appendix C to part 63, except procedure 3 (inlet and outlet concentration measurements). (The symbol "F_{bio}" represents the site-specific fraction of an individual partially soluble or soluble HAP compound that is biodegraded.)

(*ii*) If the biological treatment process meets the definition of "enhanced biological treatment process" in §63.1251, the owner or operator shall determine $F_{bio}$for the compounds in Table 2 of this subpart using any of the procedures specified in appendix C to part 63. The owner or operator shall calculate $F_{bio}$for the compounds in Table 3 of this subpart using the defaults for first order biodegradation rate constants (K_1) in Table 9 of this subpart and follow the procedure explained in Form III of appendix C, 40 CFR part 63, or any of the procedures specified in appendix C of 40 CFR part 63.

(F) *Open or closed aerobic biological treatment processes: percent removal for partially soluble or soluble HAP compounds.* This paragraph applies to the use of performance tests that are conducted for open or closed aerobic biological treatment processes to demonstrate compliance with the percent removal provisions for either partially soluble HAP compounds in §63.1256(g)(8)(ii) or soluble HAP compounds in §63.1256(g)(9)(ii) or (g)(12). The owner or operator shall comply with the provisions in paragraph (e)(2)(iii)(E) of this section, except that compliance with §63.1256(g)(8)(ii) shall be demonstrated when E is equal to or greater than 99 percent, compliance with §63.1256(g)(9)(ii) shall be demonstrated when E is equal to or greater than 90 percent, and compliance with §63.1256(g)(12) shall be demonstrated when E is equal to or greater than 99 percent.

(G) *Closed biological treatment processes: percent mass removal option.* This paragraph applies to the use of performance tests that are conducted for closed biological treatment processes to demonstrate compliance with the percent removal provisions in §§63.1256(g)(8)(ii), (g)(9)(ii), (g)(11), or (g)(12). The owner or operator shall comply with the requirements specified in paragraphs (e)(2)(iii)(G) (*1*) through (*4*) of this section.

(*1*) Comply with the procedures specified in paragraphs (e)(2)(iii)(C) (*1*) through (*3*) of this section to determine characteristics of the wastewater entering the biological treatment unit, except that the term "partially soluble and/or soluble HAP" shall mean "soluble HAP" for the purposes of this section if the owner or operator is complying with §63.1256(g)(9)(ii) or (g)(12), and it shall mean "partially soluble HAP" if the owner or operator is complying with §63.1256(g)(8)(ii).

(*2*) Comply with the procedures specified in paragraphs (e)(2)(iii)(D) (*4*) through (*6*) of this section to determine the characteristics of gas vent streams exiting a control device, with the differences noted in paragraphs (e)(2)(iii)(G)(*3*) (*i*) and (*ii*) of this section.

(*i*) The term "partially soluble and/or soluble HAP" shall mean "soluble HAP" for the purposes of this section if the owner or operator is complying with §63.1256(g)(9)(ii) or (g)(12), and it shall mean "partially soluble HAP" if the owner or operator is complying with §63.1256(g)(8)(ii).

(*ii*) The term "combustion treatment process" shall mean "control device" for the purposes of this section.

(*3*) *Percent removal/destruction calculation.* The percent removal and destruction across the treatment unit and any control device(s) shall be calculated using Equation 51 of this subpart:

$$E = \frac{\left(QMW_a - \left(QMW_b + QMG_b\right)\right)}{QMW_a} \qquad (Eq.\ 51)$$

Where:

E = removal and destruction efficiency of the treatment unit and control device(s), percent

QMW_a, QMW_b= mass flow rate of partially soluble and/or soluble HAP compounds in wastewater entering (QMW_a) and exiting (QMW_b) the treatment process, kilograms per hour (as calculated using Equations 44 and 45)

QMG_b= mass flow rate of partially soluble and/or soluble HAP compounds in vented gas stream exiting the control device, kg/hr

(*4*) *Compare mass removal/destruction efficiency to required efficiency.* Compare the mass removal/destruction efficiency (calculated using Equation 51 of this subpart) to the required efficiency as specified in §63.1256(g)(8)(ii), (g)(9)(ii), (g)(11), or (g)(12). If complying with §63.1256(g)(8)(ii), compliance is demonstrated if the mass removal/destruction is 99 percent or greater. If complying with §63.1256(g)(9)(ii), compliance is demonstrated if the mass removal/destruction efficiency is 90 percent or greater. If complying with §63.1256(g)(11), compliance is demonstrated if the mass removal/destruction efficiency is 95 percent or greater. If complying with §63.1256(g)(12), compliance is demonstrated if the mass removal/destruction efficiency is 99 percent or greater.

(3) *Compliance with control device provisions.* Except as provided in paragraph (e)(3)(iv) of this section, an owner or operator shall demonstrate that each control device or combination of control devices achieves the appropriate conditions specified in §63.1256(h)(2) by using one or more of the methods specified in paragraphs (e)(3)(i), (ii), or (iii) of this section.

(i) *Performance test for control devices other than flares.* This paragraph applies to performance tests that are conducted to demonstrate compliance of a control device with the efficiency limits specified in §63.1256(h)(2). If complying with the 95-percent reduction efficiency requirement, comply with the requirements specified in paragraphs (e)(3)(i) (A) through (J) of this section. If complying with the 20 ppm by volume requirement, comply with the requirements specified in paragraphs (e)(3)(i) (A) through (G) and (e)(3)(i)(J) of this section.

(A) *General.* The owner or operator shall comply with the general performance test provisions in paragraphs (e)(2)(iii)(A) (*1*) through (*4*) of this section, except that the term “treatment unit” shall mean “control device” for the purposes of this section.

(B) *Sampling sites.* Sampling sites shall be selected using Method 1 or 1A of 40 CFR part 60, appendix A, as appropriate. For determination of compliance with the 95 percent reduction requirement, sampling sites shall be located at the inlet and the outlet of the control device. For determination of compliance with the 20 ppmv limit, the sampling site shall be located at the outlet of the control device.

(C) *Concentration in gas stream entering or exiting the control device.* The concentration of total organic HAP or TOC in a gas stream shall be determined as provided in this paragraph. Samples may be grab samples or composite samples (i.e., integrated samples). Samples shall be taken at approximately equally spaced time intervals over a 1-hour period. Each 1-hour period constitutes a run, and the performance test shall consist of a minimum of three runs. Concentration measurements shall be determined using Method 18 of 40 CFR part 60, appendix A. Alternatively, any other test method validated according to the procedures in Method 301 of appendix A of this part may be used.

(D) *Volumetric flow rate of gas stream entering or exiting the control device.* The volumetric flow rate of the gas stream shall be determined using Method 2, 2A, 2C, or 2D of 40 CFR part 60, appendix A, as appropriate. Volumetric flow rate measurements shall be taken at the same time as the concentration measurements.

(E) *Calculation of TOC concentration.* The owner or operator shall compute TOC in accordance with the procedures in paragraph (a)(2) of this section.

(F) *Calculation of total organic HAP concentration.* The owner or operator determining compliance based on total organic HAP concentration shall compute the total organic HAP concentration in accordance with the provisions in paragraph (a)(2) of this section.

(G) *Requirements for combustion control devices.* If the control device is a combustion device, the owner or operator shall correct TOC and organic HAP concentrations to 3 percent oxygen in accordance with the provisions in paragraph (a)(3) of this section, and demonstrate initial compliance with the requirements for halogenated streams in accordance with paragraph (a)(6) of this section.

(H) *Mass rate calculation.* The mass rate of either TOC (minus methane and ethane) or total organic HAP for each sample run shall be calculated using the following equations. Where the mass rate of TOC is being calculated, all organic compounds (minus methane and ethane) measured by methods specified in paragraph (e)(3)(i)(C) of this

section are summed using Equations 52 and 53 of this subpart. Where the mass rate of total organic HAP is being calculated, only soluble and partially soluble HAP compounds shall be summed using Equations 52 and 53.

$$QMG_a = K_2 * \left(\sum_{i=1}^{n} (CG_{a,i}) * (MW_i) \right) * QG_a \qquad (Eq.52)$$

$$QMG_b = K_2 * \left(\sum_{i=1}^{n} (CG_{b,i}) * (MW_i) \right) * QG_b \qquad (Eq.53)$$

Where:

$CG_{a,i}$, $CG_{b,i}$= concentration of TOC or total organic HAP, in vented gas stream, entering ($CG_{a,i}$) and exiting ($CG_{b,i}$) the control device, dry basis, ppmv

QMG_a, QMG_b= mass rate of TOC or total organic HAP, in vented gas stream, entering (QMG_a) and exiting (QMG_b) the control device, dry basis, kg/hr

M_{wi}= molecular weight of a component, kilogram/kilogram-mole

QG_a,QG_b= flow rate of gas stream entering (QG_a) and exiting (QG_b) the control device, dry standard cubic meters per hour

K_2=constant, 41.57×10^{-9}(parts per million)$^{-1}$(gram-mole per standard cubic meter) (kilogram/gram), where standard temperature (gram-mole per standard cubic meter) is 20 °C

i=identifier for a compound

n=number of components in the sample

(I) *Percent reduction calculation.* The percent reduction in TOC or total organic HAP for each sample run shall be calculated using Equation 54 of this subpart:

$$E = \frac{QMG_a - QMG_b}{QMG_a}(100\%) \qquad (Eq.54)$$

Where:

E=destruction efficiency of control device, percent

QMG_a,QMG_b=mass rate of TOC or total organic HAP, in vented gas stream entering and exiting (QMG_b) the control device, dry basis, kilograms per hour

(J) *Compare mass destruction efficiency to required efficiency.* If complying with the 95-percent reduction efficiency requirement, compliance is demonstrated if the mass destruction efficiency (calculated in Equation 51 of this subpart) is 95 percent or greater. If complying with the 20 ppmv limit, compliance is demonstrated if the outlet TOC concentration is 20 ppmv, or less.

(ii) *Design evaluation.* A design evaluation conducted in accordance with the provisions in paragraph (a)(1) of this section. Compounds that meet the requirements specified in paragraph (e)(2)(iii)(A)(4) of this section are not required to be included in the design evaluation.

(iii) *Compliance demonstration for flares.* When a flare is used to comply with §63.1256(h), the owner or operator shall comply with the flare provisions in §63.11(b). An owner or operator is not required to conduct a performance test to determine percent emission reduction or outlet organic HAP or TOC concentration when a flare is used.

(iv) *Exemptions from compliance demonstrations.* An owner or operator using any control device specified in paragraph (a)(4) of this section is exempt from the requirements in paragraphs (e)(3)(i) through (e)(3)(iii) of this section and from the requirements in §63.6(f).

(f) *Pollution prevention alternative standard.* The owner or operator shall demonstrate compliance with §63.1252(e)(2) using the procedures described in paragraph (f)(1) and (f)(3) of this section. The owner or operator shall demonstrate compliance with §63.1252(e)(3) using the procedures described in paragraphs (f)(2) and (f)(3) of this section.

(1) Compliance is demonstrated when the annual kg/kg factor, calculated according to the procedure in paragraphs (f)(1)(i) and (iii) of this section, is reduced by at least 75 percent as calculated according to the procedure in paragraph (f)(1)(i) and (ii) of this section.

(i) The production-indexed HAP consumption factors shall be calculated by dividing annual consumption of total HAP by the annual production rate, per process. The production-indexed total VOC consumption factor shall be calculated by dividing annual consumption of total VOC by the annual production rate, per process.

(ii) The baseline factor is calculated from yearly production and consumption data for the first 3-year period in which the PMPU was operational, beginning no earlier than the 1987 calendar year, or for a minimum period of 12 months from startup of the process until the present in which the PMPU was operational and data are available, beginning no earlier than the 1987 calendar year.

(iii) The annual factor is calculated on the following bases:

(A) For continuous processes, the annual factor shall be calculated every 30 days for the 12-month period preceding the 30th day (30-day rolling average).

(B) For batch processes, the annual factor shall be calculated either every 10 batches for the 12-month period preceding the 10th batch (10-batch rolling average) or a maximum of once per month, if the number of batches is greater than 10 batches per month. The annual factor shall be calculated every 5 batches if the number of batches is less than 10 for the 12-month period preceding the 10th batch and shall be calculated every year if the number of batches is less than 5 for the 12-month period preceding the 5th batch.

(2) Compliance is demonstrated when the requirements of paragraphs (f)(2)(i) through (iv) of this section are met.

(i) The annual kg/kg factor, calculated according to the procedure in paragraphs (f)(1)(i) and (f)(1)(iii) of this section, is reduced to a value equal to or less than 50 percent of the baseline factor calculated according to the procedure in paragraphs (f)(1)(i) and (ii) of this section.

(ii) The yearly reductions associated with add-on controls that meet the criteria of §§63.1252(h)(3)(ii)(A) through (D) must be equal to or greater than the amounts calculated in paragraphs (f)(2)(ii)(A) and (B) of this section:

(A) The mass of HAP calculated using Equation 55 of this subpart:

$$M = [kg/kg]_b (0.75 - P_R)(M_{prod}) \qquad \text{(Eq. 55)}$$

Where:

$[kg/kg]_b$= the baseline production-indexed HAP consumption factor, in kg/kg

M_{prod}= the annual production rate, in kg/yr

M = the annual reduction required by add-on controls, in kg/yr

P_R= the fractional reduction in the annual kg/kg factor achieved using pollution prevention where $P_R$is ≥0.5

(B) The mass of VOC calculated using Equation 56 of this subpart:

$VOC_{reduced} = (VF_{base} - VF_P - VF_{annual}) \times M_{prod}$ (Eq. 56)

Where:

$VOC_{reduced}$= required VOC emission reduction from add-on controls, kg/yr

VF_{base}= baseline VOC factor, kg VOC emitted/kg production

VF_p= reduction in VOC factor achieved by pollution prevention, kg VOC emitted/kg production

VF_{annual}= target annual VOC factor, kg VOC emitted/kg production

M_{prod}= production rate, kg/yr

(iii) Demonstration that the criteria in §63.1252(e)(3)(ii)(A) through (D) are met shall be accomplished through a description of the control device and of the material streams entering and exiting the control device.

(iv) The annual reduction achieved by the add-on control shall be quantified using the methods described in §63.1257(d).

(3) Each owner or operator of a PMPU complying with the P2 standard shall prepare a P2 demonstration summary that shall contain, at a minimum, the following information:

(i) Descriptions of the methodologies and forms used to measure and record daily consumption of HAP compounds reduced as part of the P2 standard.

(ii) Descriptions of the methodologies and forms used to measure and record daily production of products which are included in the P2 standard.

(iii) Supporting documentation for the descriptions provided in paragraphs (f)(3)(i) and (ii) including, but not limited to, operator log sheets and copies of daily, monthly, and annual inventories of materials and products.

(g) *Compliance with storage tank provisions by using emissions averaging.* An owner or operator with two or more affected storage tanks may demonstrate compliance with §63.1253, as applicable, by fulfilling the requirements of paragraphs (g)(1) through (4) of this section.

(1) The owner or operator shall develop and submit for approval an Implementation Plan containing all the information required in §63.1259(e) 6 months prior to the compliance date of the standard. The Administrator shall have 90 days to approve or disapprove the emissions averaging plan after which time the plan shall be considered approved.

(2) The annual mass rate of total organic HAP (E^{Ti}, E^{To}) shall be calculated for each storage tank included in the emissions average using the procedures specified in paragraph (c)(1), (2), or (3) of this section.

(3) Equations 57 and 58 of this subpart shall be used to calculate total HAP emissions for those tanks subject to §63.1253(b) or (c):

$$E_{Ti} = \sum_{j=1}^{n} E_{ij} \quad (Eq.\ 57) \qquad E_{To} = \sum_{j=1}^{n} E_{oj} \quad (Eq.\ 58)$$

Where:

E_{ij}= yearly mass rate of total HAP at the inlet of the control device for tank j

E_{oj}= yearly mass rate of total HAP at the outlet of the control device for tank j

ET_i= total yearly uncontrolled HAP emissions

E_{To}= total yearly actual HAP emissions

$_n$= number of tanks included in the emissions average

(4) The overall percent reduction efficiency shall be calculated as follows:

$$R = \frac{E_{Ti} - D\,E_{To}}{E_{Ti}} 100\% \qquad (Eq.\ 59)$$

Where:

R = overall percent reduction efficiency

D = discount factor = 1.1 for all controlled storage tanks

(h) *Compliance with process vent provisions by using emissions averaging.* An owner or operator with two or more affected processes complying with §63.1254 by using emissions averaging shall demonstrate compliance with paragraphs (h)(1), (2) and (3) of this section.

(1) The owner or operator shall develop and submit for approval an Implementation Plan at least 6 months prior to the compliance date of the standard containing all the information required in §63.1259(e). The Administrator shall have 90 days to approve or disapprove the emissions averaging plan. The plan shall be considered approved if the Administrator either approves the plan in writing, or fails to disapprove the plan in writing. The 90-day period shall begin when the Administrator receives the request. If the request is denied, the owner or operator must still be in compliance with the standard by the compliance date.

(2) Owners or operators shall calculate uncontrolled and controlled emissions of HAP by using the methods specified in paragraph (d)(2) and (3) of this section for each process included in the emissions average.

(3) Equations 60 and 61 of this subpart shall be used to calculate total HAP emissions:

$$E_{TU} = \sum_{i=1}^{n} E_{Ui} \qquad (Eq.\ 60)$$

$$E_{TC} = \sum_{i=1}^{n} E_{Ci} \qquad (Eq.\ 61)$$

Where:

E_{Ui}= yearly uncontrolled emissions from process i.

E_{Ci}= yearly actual emissions for process i.

E_{TU}= total yearly uncontrolled emissions.

E_{TC}= total yearly actual emissions.

n = number of processes included in the emissions average.

(4) The overall percent reduction efficiency shall be calculated using Equation 62 of this subpart:

$$R = \frac{E_{TU} - D\,E_{TC}}{E_{TU}}(100\%) \qquad (Eq.\ 62)$$

Where:

R = overall percent reduction efficiency

D = discount factor = 1.1 for all controlled emission points

[63 FR 50326, Sept. 21, 1998, as amended at 65 FR 52609, Aug. 29, 2000; 66 FR 40134, Aug. 2, 2001]

§ 63.1258 Monitoring Requirements.

(a) The owner or operator of any existing, new, or reconstructed affected source shall provide evidence of continued compliance with the standard as specified in this section. During the initial compliance demonstration, maximum or minimum operating parameter levels, as appropriate, shall be established for emission sources that will indicate the source is in compliance. Test data, calculations, or information from the evaluation of the control device design shall be used to establish the operating parameter level.

(b) *Monitoring for control devices* —(1) *Parameters to monitor.* Except as specified in paragraph (b)(1)(i) of this section, for each control device, the owner or operator shall install and operate monitoring devices and operate within the established parameter levels to ensure continued compliance with the standard. Monitoring parameters are specified for control scenarios in Table 4 of this subpart and in paragraphs (b)(1)(ii) through (xi) of this section.

(i) *Periodic verification.* For control devices that control vent streams totaling less than 1 ton/yr HAP emissions, before control, monitoring shall consist of a daily verification that the device is operating properly. If the control device is used to control batch process vents alone or in combination with other streams, the verification may be on a per batch basis. This verification shall include, but not be limited to, a daily or per batch demonstration that the unit is working as designed and may include the daily measurements of the parameters described in (b)(1)(ii) through (x) of this section. This demonstration shall be included in the Precompliance report, to be submitted 6 months prior to the compliance date of the standard.

(ii) *Scrubbers.* For affected sources using liquid scrubbers, the owner or operator shall establish a minimum scrubber liquid flow rate or pressure drop as a site-specific operating parameter which must be measured and recorded every 15 minutes during the period in which the scrubber is functioning in achieving the HAP removal required by this subpart. If the scrubber uses a caustic solution to remove acid emissions, the owner or operator shall establish a minimum pH of the effluent scrubber liquid as a site-specific operating parameter which must be monitored at least once a day. As an alternative to measuring pH, you may elect to continuously monitor the caustic strength of the scrubber effluent. The minimum scrubber flowrate or pressure drop shall be based on the conditions anticipated under worst-case conditions, as defined in §63.1257(b)(8)(i).

(A) The monitoring device used to determine the pressure drop shall be certified by the manufacturer to be accurate to within a gage pressure of ±10 percent of the maximum pressure drop measured.

(B) The monitoring device used for measurement of scrubber liquid flowrate shall be certified by the manufacturer to be accurate within ±10 percent of the design scrubber liquid flowrate.

(C) The monitoring device shall be calibrated annually.

(iii) *Condensers* . For each condenser, the owner or operator shall establish the maximum condenser outlet gas temperature or product side temperature as a site specific operating parameter which much be measured and recorded at least every 15 minutes during the period in which the condenser is functioning in achieving the HAP removal required by this subpart.

(A) The temperature monitoring device must be accurate to within ±2 percent of the temperature measured in degrees Celsius or ±2.5 °C, whichever is greater.

(B) The temperature monitoring device must be calibrated annually.

(iv) *Regenerative carbon adsorbers.* For each regenerative carbon adsorber, the owner or operator shall comply with the provisions in paragraphs (b)(1)(iv)(A) through (F) of this section.

(A) Establish the regeneration cycle characteristics specified in paragraphs (b)(1)(iv)(A)(*1*) through (*4*) of this section under worst-case conditions, as defined in §63.1257(b)(8)(i).

(*1*) Minimum regeneration frequency (i.e., operating time since last regeneration);

(*2*) Minimum temperature to which the bed is heated during regeneration;

(*3*) Maximum temperature to which the bed is cooled, measured within 15 minutes of completing the cooling phase; and

(*4*) Minimum regeneration stream flow.

(B) Monitor and record the regeneration cycle characteristics specified in paragraphs (b)(1)(iv)(B)(*1*) through (*4*) of this section for each regeneration cycle.

(*1*) Regeneration frequency (operating time since end of last regeneration);

(*2*) Temperature to which the bed is heated during regeneration;

(*3*) Temperature to which the bed is cooled, measured within 15 minutes of the completion of the cooling phase; and

(*4*) Regeneration stream flow.

(C) Use a temperature monitoring device that is accurate to within ±2 percent of the temperature measured in degrees Celsius or ±2.5 °C, whichever is greater.

(D) Use a regeneration stream flow monitoring device capable of recording the total regeneration stream flow to within ±10 percent of the established value (i.e., accurate to within ±10 percent of the reading).

(E) Calibrate the temperature and flow monitoring devices annually.

(F) Conduct an annual check for bed poisoning in accordance with manufacturer's specifications.

(v) *Nonregenerative carbon adsorbers.* For each nonregenerative carbon adsorber, the owner or operator shall establish and monitor the maximum time interval between replacement based on the conditions anticipated under worst-case, as defined in §63.1257(b)(8)(i).

(vi) *Flares.* For each flare, the presence of the pilot flame shall be monitored every 15 minutes during the period in which the flare is functioning in achieving the HAP removal required by this subpart.

(vii) *Thermal incinerators.* For each thermal incinerator, the owner or operator shall establish the minimum temperature of the gases exiting the combustion chamber as the site-specific operating parameter which must be measured and recorded at least once every 15 minutes during the period in which the combustion device is functioning in achieving the HAP removal required by this subpart.

(A) The temperature monitoring device must be accurate to within ±0.75 percent of the temperature measured in degrees Celsius or ±2.5 °C, whichever is greater.

(B) The monitoring device must be calibrated annually.

(viii) *Catalytic incinerators.* For each catalytic incinerator, the owner or operator shall monitor the temperature of the gas stream immediately before and after the catalyst bed. The owner or operator shall establish the minimum temperature of the gas stream immediately before the catalyst bed and the minimum temperature difference across the catalyst bed as the site-specific operating parameter which must be monitored and recorded at least once every 15 minutes during the period in which the catalytic incinerator is functioning in achieving the HAP removal required by this subpart.

(A) The temperature monitoring devices must be accurate to within ±0.75 percent of the temperature measured in degrees Celsius or ±2.5 °C, whichever is greater.

(B) The temperature monitoring devices must be calibrated annually.

(ix) *Process heaters and boilers.* (A) Except as specified in paragraph (b)(1)(ix)(B) of this section, for each boiler or process heater, the owner or operator shall establish the minimum temperature of the gases exiting the combustion chamber as the site-specific operating parameter which must be monitored and recorded at least once every 15 minutes during the period in which the boiler or process heater is functioning in achieving the HAP removal required by this subpart.

(*1*) The temperature monitoring device must be accurate to within ±0.75 percent of the temperature measured in degrees Celsius or ±2.5 °C, whichever is greater.

(*2*) The temperature monitoring device must be calibrated annually.

(B) The owner or operator is exempt from the monitoring requirements specified in paragraph (b)(1)(ix)(A) of this section if either:

(*1*) All vent streams are introduced with primary fuel; or

(*2*) The design heat input capacity of the boiler or process heater is 44 megawatts or greater.

(x) *Continuous emission monitor.* As an alternative to the parameters specified in paragraphs (b)(1)(ii) through (ix) of this section, an owner or operator may monitor and record the outlet HAP concentration or both the outlet TOC concentration and outlet hydrogen halide and halogen concentration every 15 minutes during the period in which the control device is functioning in achieving the HAP removal required by this subpart. The owner or operator need not monitor the hydrogen halide and halogen concentration if, based on process knowledge, the owner or operator determines that the emission stream does not contain hydrogen halides or halogens. The HAP or TOC monitor must meet the requirements of Performance Specification 8 or 9 of appendix B of part 60 and must be installed, calibrated, and maintained, according to §63.8. As part of the QA/QC Plan, calibration of the device must include, at a minimum, quarterly cylinder gas audits.

(xi) *CVS visual inspections.* The owner or operator shall perform monthly visual inspections of each closed vent system as specified in §63.1252(b).

(2) *Averaging periods.* Averaging periods for parametric monitoring levels shall be established according to paragraphs (b)(2)(i) through (iii) of this section.

(i) Except as provided in paragraph (b)(2)(iii) of this section, a daily (24-hour) or block average shall be calculated as the average of all values for a monitored parameter level set according to the procedures in (b)(3)(iii) of this section recorded during the operating day or block.

(ii) The operating day or block shall be defined in the Notification of Compliance Status report. The daily average may be from midnight to midnight or another continuous 24-hour period. The block average is limited to a period of time that is, at a maximum, equal to the time from the beginning to end of a batch process.

(iii) Monitoring values taken during periods in which the control devices are not functioning in controlling emissions, as indicated by periods of no flow, shall not be considered in the averages. Where flow to the device could be intermittent, the owner or operator shall install, calibrate and operate a flow indicator at the inlet or outlet of the control device to identify periods of no flow.

(3) *Procedures for setting parameter levels for control devices used to control emissions* —(i) *Small control devices.* Except as provided in paragraph (b)(1)(i) of this section, for devices controlling less than 10 tons per year of HAP for which a performance test is not required, the parametric levels shall be set based on the design evaluation required in §63.1257(d)(3)(i). If a performance test is conducted, the monitoring parameter level shall be established according to the procedures in (b)(3)(ii) of this section.

(ii) *Large control devices.* For devices controlling greater than 10 tons per year of HAP for which a performance test is required, the parameter level must be established as follows:

(A) If the operating parameter level to be established is a maximum, it must be based on the average of the values from each of the three test runs.

(B) If the operating parameter level to be established is a minimum, it must be based on the average of the values from each of the three test runs.

(C) The owner or operator may establish the parametric monitoring level(s) based on the performance test supplemented by engineering assessments and manufacturer's recommendations. Performance testing is not required to be conducted over the entire range of expected parameter values. The rationale for the specific level for each parameter, including any data and calculations used to develop the level(s) and a description of why the level indicates proper operation of the control device shall be provided in the Precompliance report. The procedures specified in this section have not been approved by the Administrator and determination of the parametric monitoring level using these procedures is subject to review and approval by the Administrator.

(iii) *Parameters for control devices controlling batch process vents.* For devices controlling batch process vents alone or in combination with other streams, the parameter level(s) shall be established in accordance with paragraph (b)(3)(iii)(A) or (B) of this section.

(A) If more than one batch emission episode has been selected to be controlled, a single level for the batch process(es) shall be determined from the initial compliance demonstration.

(B) Instead of establishing a single level for the batch process(es), as described in paragraph (b)(3)(iii)(A) of this section, an owner or operator may establish separate levels for each batch emission episode, selected to be controlled. If separate monitoring levels are established, the owner or operator must provide a record indicating at what point in the daily schedule or log of processes required to be recorded per the requirements of §63.1259(b)(9) the parameter being monitored changes levels and must record at least one reading of the new parameter level, even if the duration of monitoring for the new parameter is less than 15-minutes.

(4) *Request approval to monitor alternative parameters.* An owner or operator may request approval to monitor parameters other than those required by paragraphs (b)(1)(ii) through (ix) of this section. The request shall be submitted according to the procedures specified in §63.8(f) or included in the Precompliance report.

(5) *Monitoring for the alternative standards.* (i) For control devices that are used to comply with the provisions of §63.1253(d) or §63.1254(c), the owner or operator shall monitor and record the outlet TOC concentration and the outlet hydrogen halide and halogen concentration every 15 minutes during the period in which the device is

functioning in achieving the HAP removal required by this subpart using CEMS as specified in paragraphs (b)(5)(i)(A) through (D) of this section.

(A) A TOC monitor meeting the requirements of EPA Performance Specification 8, 9, or 15 of appendix B of 40 CFR part 60 shall be installed, calibrated, and maintained according to §63.8.

(B) Except as specified in paragraphs (b)(5)(i)(C) and (D) of this section, the owner or operator must monitor HCl using either a FTIR CEMS that meets Performance Specification 15 of appendix B of part 60 or any other CEMS capable of measuring HCl for which a performance specification has been promulgated in appendix B of part 60. To monitor HCl with a CEMS for which a performance specification has not been promulgated, the owner or operator must prepare a monitoring plan and submit it for approval in accordance with the procedures specified in §63.8.

(C) As an alternative to using a CEMS as specified in paragraph (b)(5)(i)(B) of this section to monitor halogenated vent streams that are controlled by a combustion device followed by a scrubber, the owner or operator may elect to monitor scrubber operating parameters as specified in paragraph (b)(1)(ii) of this section that demonstrate the HCl emissions are reduced by at least 95 percent by weight.

(D) The owner or operator need not monitor the hydrogen halide and halogen concentration if, based on process knowledge, the owner or operator determines that the emission stream does not contain hydrogen halides or halogens.

(ii) An owner or operator complying with the alternative standard using control devices in which supplemental gases are added to the vents or manifolds must either correct for supplemental gases as specified in §63.1257(a)(3) or comply with the requirements of paragraph (b)(5)(ii)(A) or (B) of this section. If the owner or operator corrects for supplemental gases as specified in §63.1257(a)(3)(ii) for noncombustion control devices, the flow rates must be evaluated as specified in paragraph (b)(5)(ii)(C) of this section.

(A) *Provisions for combustion devices.* As an alternative to correcting for supplemental gases as specified in §63.1257(a)(3), the owner or operator may monitor residence time and firebox temperature according to the requirements of paragraphs (b)(5)(ii)(A)(*1*) and (*2*) of this section. Monitoring of residence time may be accomplished by monitoring flowrate into the combustion chamber.

(*1*) If complying with the alternative standard instead of achieving a control efficiency of 95 percent or less, the owner or operator must maintain a minimum residence time of 0.5 seconds and a minimum combustion chamber temperature of 760 °C.

(*2*) If complying with the alternative standard instead of achieving a control efficiency of 98 percent, the owner or operator must maintain a minimum residence time of 0.75 seconds and a minimum combustion chamber temperature of 816 °C.

(B) *Provisions for dense gas systems.* As an alternative to correcting for supplemental gases as specified in §63.1257(a)(3), for noncombustion devices used to control emissions from dense gas systems, as defined in §63.1251, the owner or operator shall monitor flowrate as specified in paragraphs (b)(5)(ii)(B)(*1*) through (*4*) of this section.

(*1*) Use Equation 63 of this subpart to calculate the system flowrate setpoint at which the average concentration is 5,000 ppmv TOC:

$$F_s = \frac{721 \times E_{an}}{5,000} \qquad \text{(Eq. 63)}$$

Where:

F_s= system flowrate setpoint, scfm

E_{an}= annual emissions entering the control device, lbmols/yr

(*2*) Annual emissions used in Equation 63 of this subpart must be based on the actual mass of organic compounds entering the control device, as calculated from the most representative emissions inventory data submitted within the 5 years before the Notification of Compliance Status report is due. The owner or operator must recalculate the system flowrate setpoint once every 5 years using the annual emissions from the most representative emissions inventory data submitted during the 5-year period after the previous calculation. Results of the initial calculation must be included in the Notification of Compliance Status report, and recalculated values must be included in the next Periodic report after each recalculation. For all calculations after the initial calculation, to use emissions inventory data calculated using procedures other than those specified in §63.1257(d), the owner or operator must submit the emissions inventory data calculations and rationale for their use in the Notification of Process Change report or an application for a part 70 permit renewal or revision.

(*3*) In the Notification of Compliance Status report, the owner or operator may elect to establish both a maximum daily average operating flowrate limit above the flowrate setpoint and a reduced outlet concentration limit corresponding to this flowrate limit. The owner or operator may also establish reduced outlet concentration limits for any daily average flowrates between the flowrate setpoint and the flowrate limit. The correlation between these elevated flowrates and the corresponding outlet concentration limits must be established using Equation 64 of this subpart:

$$C_a = \frac{F_s}{F_a} \times 50 \qquad \text{(Eq. 64)}$$

Where:

C_a= adjusted outlet concentration limit, dry basis, ppmv

50 = outlet concentration limit associated with the flowrate setpoint, dry basis, ppmv

F_s= system flowrate setpoint, scfm

F_a= actual system flowrate limit, scfm

(*4*) The owner or operator must install and operate a monitoring system for measuring system flowrate. The flowrate into the control device must be monitored and recorded at least once every hour. The system flowrate must be calculated as the average of all values measured during each 24-hour operating day. The flowrate monitoring device must be accurate to within 5 percent of the system flowrate setpoint, and the flowrate monitoring device must be calibrated annually.

(C) *Flow rate evaluation for noncombustion devices.* To demonstrate continuous compliance with the requirement to correct for supplemental gases as specified in §63.1257(a)(3)(ii) for noncombustion devices, the owner or operator must evaluate the volumetric flow rate of supplemental gases, V_s, and the volumetric flow rate of all gases, V_a, each time a new operating scenario is implemented based on process knowledge and representative operating data. The procedures used to evaluate the flow rates, and the resulting correction factor used in Equation 7B of this subpart, must be included in the Notification of Compliance Status report and in the next Periodic report submitted after an operating scenario change.

(6) *Exceedances of operating parameters.* An exceedance of an operating parameter is defined as one of the following:

(i) If the parameter, averaged over the operating day or block, is below a minimum value established during the initial compliance demonstration.

(ii) If the parameter, averaged over the operating day or block, is above the maximum value established during the initial compliance demonstration.

(iii) Each loss of all pilot flames for flares.

(7) *Excursions.* Excursions are defined by either of the two cases listed in paragraphs (b)(7)(i) or (ii) of this section.

(i) When the period of control device operation is 4 hours or greater in an operating day and monitoring data are insufficient to constitute a valid hour of data, as defined in paragraph (b)(7)(iii) of this section, for at least 75 percent of the operating hours.

(ii) When the period of control device operation is less than 4 hours in an operating day and more than one of the hours during the period of operation does not constitute a valid hour of data due to insufficient monitoring data.

(iii) Monitoring data are insufficient to constitute a valid hour of data, as used in paragraphs (b)(7)(i) and (ii) of this section, if measured values are unavailable for any of the required 15-minute periods within the hour.

(8) *Violations.* Exceedances of parameters monitored according to the provisions of paragraphs (b)(1)(ii), (iv) through (ix), and (b)(5)(ii)(A) and (B) of this section, or excursions as defined by paragraphs (b)(7)(i) through (iii) of this section, constitute violations of the operating limit according to paragraphs (b)(8)(i), (ii), and (iv) of this section. Exceedances of the temperature limit monitored according to the provisions of paragraph (b)(1)(iii) of this section or exceedances of the outlet concentrations monitored according to the provisions of paragraph (b)(1)(x) of this section constitute violations of the emission limit according to paragraphs (b)(8)(i), (ii), and (iv) of this section. Exceedances of the outlet concentrations monitored according to the provisions of paragraph (b)(5) of this section constitute violations of the emission limit according to the provisions of paragraphs (b)(8)(iii) and (iv) of this section.

(i) Except as provided in paragraph (b)(8)(iv) of this section, for episodes occurring more than once per day, exceedances of established parameter limits or excursions will result in no more than one violation per operating day for each monitored item of equipment utilized in the process.

(ii) Except as provided in paragraph (b)(8)(iv) of this section, for control devices used for more than one process in the course of an operating day, exceedances or excursions will result in no more than one violation per operating day, per control device, for each process for which the control device is in service.

(iii) Except as provided in paragraph (b)(8)(iv) of this section, exceedances of the 20 or 50 ppmv TOC outlet emission limit, averaged over the operating day, will result in no more than one violation per day per control device. Except as provided in paragraph (b)(8)(iv) of this section, exceedances of the 20 or 50 ppmv hydrogen halide or halogen outlet emission limit, averaged over the operating day, will result in no more than one violation per day per control device.

(iv) Periods of time when monitoring measurements exceed the parameter values as well as periods of inadequate monitoring data do not constitute a violation if they occur during a start-up, shutdown, or malfunction, and the facility operates in accordance with §63.6(e)(1).

(c) *Monitoring for emission limits.* The owner or operator of any affected source complying with the provisions of §63.1254(a)(2) shall demonstrate continuous compliance with the 900 and 1,800 kg/yr emission limits by calculating daily 365-day rolling summations of emissions. During periods of planned routine maintenance when emissions are controlled as specified in §63.1252(h), the owner or operator must calculate controlled emissions assuming the HAP emissions are reduced by 93 percent. For any owner or operator opting to switch compliance strategy from the 93 percent control requirement to the annual mass emission limit method, as described in §63.1254(a)(1)(i), the rolling summations, beginning with the first day after the switch, must include emissions from the past 365 days.

(d) *Monitoring for equipment leaks.* The owner or operator of any affected source complying with the requirements of §63.1255 of this subpart shall meet the monitoring requirements described §63.1255 of this subpart.

(e) *Pollution prevention.* The owner or operator of any affected source that chooses to comply with the requirements of §§63.1252(e)(2) and (3) shall calculate a yearly rolling average of kg HAP consumption per kg production and kg VOC consumption per kg production every month or every 10 batches. Each rolling average kg/kg factor that exceeds the value established in §63.1257(f)(1)(ii) will be considered a violation of the emission limit.

(f) *Emissions averaging.* The owner or operator of any affected source that chooses to comply with the requirements of §63.1252(d) shall meet all monitoring requirements specified in paragraphs (b)(1) and (3) of this section, as applicable, for all processes and storage tanks included in the emissions average.

(g) *Inspection and monitoring of waste management units and treatment processes.* (1) For each wastewater tank, surface impoundment, container, individual drain system, and oil-water separator that receives, manages, or treats wastewater, a residual removed from wastewater, a recycled wastewater, or a recycled residual removed from wastewater, the owner or operator shall comply with the inspection requirements specified in Table 7 of this subpart.

(2) For each biological treatment unit used to comply with §63.1256(g), the owner or operator shall monitor TSS, BOD, and the biomass concentration at a frequency approved by the permitting authority and using methods approved by the permitting authority. The owner or operator may request approval to monitor other parameters. The request shall be submitted in the Precompliance report according to the procedures specified in §63.1260(e), and shall include a description of planned reporting and recordkeeping procedures. The owner or operator shall include as part of the submittal the basis for the selected monitoring frequencies and the methods that will be used. The Administrator will specify appropriate reporting and recordkeeping requirements as part of the review of the permit application or by other appropriate means.

(3) For nonbiological treatment units, the owner or operator shall request approval to monitor appropriate parameters that demonstrate proper operation of the selected treatment process. The request shall be submitted in the Precompliance report according to the procedures specified in §63.1260(e), and shall include a description of planned reporting and recordkeeping procedures. The Administrator will specify appropriate reporting and recordkeeping requirements as part of the review of the permit application or by other appropriate means.

(h) *Leak inspection provisions for vapor suppression equipment.* (1) Except as provided in paragraph (h)(9) and (10) of this section, for each vapor collection system, closed-vent system, fixed roof, cover, or enclosure required to comply with this section, the owner or operator shall comply with the requirements of paragraphs (h)(2) through (8) of this section.

(2) Except as provided in paragraphs (h)(6) and (7) of this section, each vapor collection system and closed-vent system shall be inspected according to the procedures and schedule specified in paragraphs (h)(2)(i) and (ii) of this section and each fixed roof, cover, and enclosure shall be inspected according to the procedures and schedule specified in paragraph (h)(2)(iii) of this section.

(i) If the vapor collection system or closed-vent system is constructed of hard-piping, the owner or operator shall:

(A) Conduct an initial inspection according to the procedures in paragraph (h)(3) of this section, and

(B) Conduct annual visual inspections for visible, audible, or olfactory indications of leaks.

(ii) If the vapor collection system or closed-vent system is constructed of ductwork, the owner or operator shall:

(A) Conduct an initial inspection according to the procedures in paragraph (h)(3) of this section, and

(B) Conduct annual inspections according to the procedures in paragraph (h)(3) of this section.

(C) Conduct annual visual inspections for visible, audible, or olfactory indications of leaks.

(iii) For each fixed roof, cover, and enclosure, the owner or operator shall:

(A) Conduct an initial inspection according to the procedures in paragraph (h)(3) of this section, and

(B) Conduct semiannual visual inspections for visible, audible, or olfactory indications of leaks.

(3) Each vapor collection system, closed-vent system, fixed roof, cover, and enclosure shall be inspected according to the procedures specified in paragraphs (h)(3)(i) through (v) of this section.

(i) Inspections shall be conducted in accordance with Method 21 of 40 CFR part 60, appendix A.

(ii) *Detection instrument performance criteria.* (A) Except as provided in paragraph (h)(3)(ii)(B) of this section, the detection instrument shall meet the performance criteria of Method 21 of 40 CFR part 60, appendix A, except the instrument response factor criteria in section 3.1.2(a) of Method 21 shall be for the average composition of the process fluid not each individual VOC in the stream. For process streams that contain nitrogen, air, or other inerts which are not organic HAP or VOC, the average stream response factor shall be calculated on an inert-free basis.

(B) If no instrument is available at the plant site that will meet the performance criteria specified in paragraph (h)(3)(ii)(A) of this section, the instrument readings may be adjusted by multiplying by the average response factor of the process fluid, calculated on an inert-free basis as described in paragraph (h)(3)(ii)(A) of this section.

(iii) The detection instrument shall be calibrated before use on each day of its use by the procedures specified in Method 21 of 40 CFR part 60, appendix A.

(iv) Calibration gases shall be as follows:

(A) Zero air (less than 10 parts per million hydrocarbon in air); and

(B) Mixtures of methane in air at a concentration less than 10,000 parts per million. A calibration gas other than methane in air may be used if the instrument does not respond to methane or if the instrument does not meet the performance criteria specified in paragraph (h)(2)(ii)(A) of this section. In such cases, the calibration gas may be a mixture of one or more of the compounds to be measured in air.

(v) An owner or operator may elect to adjust or not adjust instrument readings for background. If an owner or operator elects to not adjust readings for background, all such instrument readings shall be compared directly to the applicable leak definition to determine whether there is a leak. If an owner or operator elects to adjust instrument readings for background, the owner or operator shall measure background concentration using the procedures in §63.180(b) and (c). The owner or operator shall subtract background reading from the maximum concentration indicated by the instrument.

(vi) The background level shall be determined according to the procedures in Method 21 of 40 CFR part 60 appendix A.

(vii) The arithmetic difference between the maximum concentration indicated by the instrument and the background level shall be compared with 500 parts per million for determining compliance.

(4) Leaks, as indicated by an instrument reading greater than 500 parts per million above background or by visual inspections, shall be repaired as soon as practicable, except as provided in paragraph (h)(5) of this section.

(i) A first attempt at repair shall be made no later than 5 calendar days after the leak is detected.

(ii) Repair shall be completed no later than 15 calendar days after the leak is detected, except as provided in paragraph (h)(4)(iii) of this section.

(iii) For leaks found in vapor collection systems used for transfer operations, repairs shall be completed no later than 15 calendar days after the leak is detected or at the beginning of the next transfer loading operation, whichever is later.

(5) Delay of repair of a vapor collection system, closed-vent system, fixed roof, cover, or enclosure for which leaks have been detected is allowed if the repair is technically infeasible without a shutdown, as defined in §63.1251, or if the owner or operator determines that emissions resulting from immediate repair would be greater than the fugitive emissions likely to result from delay of repair. Repair of such equipment shall be complete by the end of the next shutdown.

(6) Any parts of the vapor collection system, closed-vent system, fixed roof, cover, or enclosure that are designated, as described in paragraph (h)(8) of this section, as unsafe to inspect are exempt from the inspection requirements of paragraphs (h)(2)(i), (ii), and (iii) of this section if:

(i) The owner or operator determines that the equipment is unsafe to inspect because inspecting personnel would be exposed to an imminent or potential danger as a consequence of complying with paragraphs (h)(2)(i), (ii), or (iii) of this section; and

(ii) The owner or operator has a written plan that requires inspection of the equipment as frequently as practicable during safe-to-inspect times.

(7) Any parts of the vapor collection system, closed-vent system, fixed roof, cover, or enclosure that are designated, as described in paragraph (h)(8) of this section, as difficult to inspect are exempt from the inspection requirements of paragraphs (h)(2)(i), (ii), and (iii)(A) of this section if:

(i) The owner or operator determines that the equipment cannot be inspected without elevating the inspecting personnel more than 2 meters above a support surface; and

(ii) The owner or operator has a written plan that requires inspection of the equipment at least once every 5 years.

(8) Records shall be maintained as specified in §63.1259(i) (4) through (9).

(9) If a closed-vent system subject to this section is also subject to the equipment leak provisions of §63.1255, the owner or operator shall comply with the provisions of §63.1255 and is exempt from the requirements of this section.

(10) Instead of complying with the provisions of paragraphs (h)(2) through (8) of this section, an owner or operator may design a closed-vent system to operate at a pressure below atmospheric pressure. The system shall be equipped with at least one pressure gauge or other pressure measurement device that can be read from a readily accessible location to verify that negative pressure is being maintained in the closed-vent system when the associated control device is operating.

(i) *Planned routine maintenance.* During periods of planned routine maintenance when organic HAP emissions are controlled as specified in §63.1252(h)(2), the owner or operator must monitor the condenser outlet gas temperature according to the procedures specified in paragraph (b)(1)(iii) of this section. During periods of planned routine maintenance when HCl emissions are controlled as specified in §63.1252(h)(3), the owner or operator must monitor the pH of the scrubber effluent once per day.

[63 FR 50326, Sept. 21, 1998, as amended at 65 FR 52612, Aug. 29, 2000; 66 FR 40134, Aug. 2, 2001; 70 FR 25670, May 13, 2005; 71 FR 20459, Apr. 20, 2006]

§ 63.1259 Recordkeeping requirements.

(a) *Requirements of subpart A of this part.* The owner or operator of an affected source shall comply with the recordkeeping requirements in subpart A of this part as specified in Table 1 of this subpart and in paragraphs (a)(1) through (5) of this section.

(1) *Data retention.* Each owner or operator of an affected source shall keep copies of all records and reports required by this subpart for at least 5 years, as specified in §63.10(b)(1).

(2) *Records of applicability determinations.* The owner or operator of a stationary source that is not subject to this subpart shall keep a record of the applicability determination, as specified in §63.10(b)(3).

(3) *Startup, shutdown, and malfunction plan.* The owner or operator of an affected source shall develop a written startup, shutdown, and malfunction plan as specified in §63.6(e)(3). This plan shall describe, in detail, procedures for operating and maintaining the affected source during periods of startup, shutdown, and malfunction and a program for corrective action for malfunctioning process, air pollution control, and monitoring equipment used to comply with this subpart. The owner or operator of an affected source shall keep the current and superseded versions of this plan onsite, as specified in §63.6(e)(3)(v). The owner or operator shall keep the startup, shutdown, and malfunction records specified in paragraphs (a)(3)(i) through (iii) of this section. Reports related to the plan shall be submitted as specified in §63.1260(i).

(i) The owner or operator shall record the occurrence and duration of each malfunction of the process operations or of air pollution control equipment used to comply with this subpart, as specified in §63.6(e)(3)(iii).

(ii) The owner or operator shall record the occurrence and duration of each malfunction of continuous monitoring systems used to comply with this subpart.

(iii) For each startup, shutdown, or malfunction, the owner or operator shall record all information necessary to demonstrate that the procedures specified in the affected source's startup, shutdown, and malfunction plan were followed, as specified in §63.6(e)(3)(iii); alternatively, the owner or operator shall record any actions taken that are not consistent with the plan, as specified in §63.6(e)(3)(iv).

(4) *Recordkeeping requirements for sources with continuous monitoring systems.* The owner or operator of an affected source who elects to install a continuous monitoring system shall maintain records specified in §63.10(c)(1) through (14).

(5) *Application for approval of construction or reconstruction.* For new affected sources, each owner or operator shall comply with the provisions in §63.5 regarding construction and reconstruction, excluding the provisions specified in §63.5(d)(1)(ii)(H), (d)(2), and (d)(3)(ii).

(b) *Records of equipment operation.* The owner or operator must keep the following records up-to-date and readily accessible:

(1) Each measurement of a control device operating parameter monitored in accordance with §63.1258 and each measurement of a treatment process parameter monitored in accordance with §63.1258(g)(2) and (3).

(2) For processes subject to §63.1252(e), records of consumption, production, and the rolling average values of the production-indexed HAP and VOC consumption factors.

(3) For each continuous monitoring system used to comply with this subpart, records documenting the completion of calibration checks and maintenance of continuous monitoring systems.

(4) For purposes of compliance with the annual mass limits of §63.1254(a)(2) and (b)(2), daily records of the rolling annual total emissions.

(5) Records of the following, as appropriate:

(i) For processes that are in compliance with the percent reduction requirements of §63.1254(a)(1) or (b)(1) and that contain vents controlled to less than the percent reduction requirement, the records specified in paragraphs (b)(5)(i)(A) through (C) of this section are required.

(A) Standard batch uncontrolled and controlled emissions for each process;

(B) Actual uncontrolled and controlled emissions for each nonstandard batch; and

(C) A record whether each batch operated was considered a standard batch.

(ii) For processes in compliance with the annual mass limits of §63.1254(a)(2) or (b)(2), the following records are required:

(A) The number of batches per year for each batch process;

(B) The operating hours per year for continuous processes;

(C) Standard batch uncontrolled and controlled emissions for each process;

(D) Actual controlled emissions for each batch operated during periods of planned routine maintenance of a CCCD, calculated according to §63.1258(c).

(E) Actual uncontrolled and controlled emissions for each nonstandard batch;

(F) A record whether each batch operated was considered a standard batch.

(6) Wastewater concentration per POD or process, except as provided in §63.1256(a)(1)(ii).

(7) Number of storage tank turnovers per year, if used in an emissions average.

(8) A schedule or log of each operating scenario updated daily or, at a minimum, each time a different operating scenario is put into operation.

(9) Description of worst-case operating conditions as required in §63.1257(b)(8).

(10) Periods of planned routine maintenance as described in §§63.1252(h) and 63.1257(c)(5).

(11) If the owner or operator elects to comply with §63.1253(b) or (c) by installing a floating roof, the owner or operator must keep records of each inspection and seal gap measurement in accordance with §63.123(c) through (e) as applicable.

(12) If the owner or operator elects to comply with the vapor balancing alternative in §63.1253(f), the owner or operator must keep records of the DOT certification required by §63.1253(f)(2) and the pressure relief vent setting and the leak detection records specified in §63.1253(f)(5).

(13) All maintenance performed on the air pollution control equipment.

(c) *Records of operating scenarios.* The owner or operator of an affected source shall keep records of each operating scenario which demonstrates compliance with this subpart.

(d) *Records of equipment leak detection and repair programs.* The owner or operator of any affected source implementing the leak detection and repair (LDAR) program specified in §63.1255 of this subpart, shall implement the recordkeeping requirements in §63.1255 of this subpart.

(e) *Records of emissions averaging.* The owner or operator of any affected source that chooses to comply with the requirements of §63.1252(d) shall maintain up-to-date records of the following information:

(1) An Implementation Plan which shall include in the plan, for all process vents and storage tanks included in each of the averages, the information listed in paragraphs (e)(1)(i) through (v) of this section.

(i) The identification of all process vents and storage tanks in each emissions average.

(ii) The uncontrolled and controlled emissions of HAP and the overall percent reduction efficiency as determined in §§63.1257(g)(1) through (4) or 63.1257(h)(1) through (3) as applicable.

(iii) The calculations used to obtain the uncontrolled and controlled HAP emissions and the overall percent reduction efficiency.

(iv) The estimated values for all parameters required to be monitored under §63.1258(f) for each process and storage tank included in an average.

(v) A statement that the compliance demonstration, monitoring, inspection, recordkeeping and reporting provisions in §§63.1257(g) and (h), 63.1258(f), and 63.1260(k) that are applicable to each emission point in the emissions average will be implemented beginning on the date of compliance.

(2) The Implementation Plan must demonstrate that the emissions from the processes and storage tanks proposed to be included in the average will not result in greater hazard or, at the option of the operating permit authority, greater risk to human health or the environment than if the storage tanks and process vents were controlled according to the provisions in §§63.1253 and 63.1254, respectively.

(i) This demonstration of hazard or risk equivalency shall be made to the satisfaction of the operating permit authority.

(A) The Administrator may require owners and operators to use specific methodologies and procedures for making a hazard or risk determination.

(B) The demonstration and approval of hazard or risk equivalency shall be made according to any guidance that the Administrator makes available for use or any other technically sound information or methods.

(ii) An emissions averaging plan that does not demonstrate hazard or risk equivalency to the satisfaction of the Administrator shall not be approved. The Administrator may require such adjustments to the emissions averaging plan as are necessary in order to ensure that the average will not result in greater hazard or risk to human health or the environment than would result if the emission points were controlled according to §§63.1253 and 63.1254.

(iii) A hazard or risk equivalency demonstration must:

(A) Be a quantitative, comparative chemical hazard or risk assessment;

(B) Account for differences between averaging and non-averaging options in chemical hazard or risk to human health or the environment; and

(C) Meet any requirements set by the Administrator for such demonstrations.

(3) Records as specified in paragraphs (a), (b) and (d) of this section.

(4) A rolling quarterly calculation of the annual percent reduction efficiency as specified in §63.1257(g) and (h).

(f) *Records of delay of repair.* Documentation of a decision to use a delay of repair due to unavailability of parts, as specified in §63.1256(i), shall include a description of the failure, the reason additional time was necessary (including a statement of why replacement parts were not kept onsite and when delivery from the manufacturer is scheduled), and the date when the repair was completed.

(g) *Record of wastewater stream or residual transfer.* The owner or operator transferring an affected wastewater stream or residual removed from an affected wastewater stream in accordance with §63.1256(a)(5) shall keep a record of the notice sent to the treatment operator stating that the wastewater stream or residual contains organic HAP which are required to be managed and treated in accordance with the provisions of this subpart.

(h) *Records of extensions.* The owner or operator shall keep documentation of a decision to use an extension, as specified in §63.1256(b)(6)(ii) or (b)(9), in a readily accessible location. The documentation shall include a description of the failure, documentation that alternate storage capacity is unavailable, and specification of a schedule of actions that will ensure that the control equipment will be repaired and the tank will be emptied as soon as practical.

(i) *Records of inspections.* The owner or operator shall keep records specified in paragraphs (i)(1) through (9) of this section.

(1) A record that each waste management unit inspection required by §63.1256(b) through (f) was performed.

(2) A record that each inspection for control devices required by §63.1256(h) was performed.

(3) A record of the results of each seal gap measurement required by §63.1256(b)(5) and (f)(3). The records shall include the date of measurement, the raw data obtained in the measurement, and the calculations described in §63.120(b)(2) through (4).

(4) Records identifying all parts of the vapor collection system, closed-vent system, fixed roof, cover, or enclosure that are designated as unsafe to inspect in accordance with §63.1258(h)(6), an explanation of why the equipment is unsafe to inspect, and the plan for inspecting the equipment.

(5) Records identifying all parts of the vapor collection system, closed-vent system, fixed roof, cover, or enclosure that are designated as difficult to inspect in accordance with §63.1258(h)(7), an explanation of why the equipment is difficult to inspect, and the plan for inspecting the equipment.

(6) For each vapor collection system or closed-vent system that contains bypass lines that could divert a vent stream away from the control device and to the atmosphere, the owner or operator shall keep a record of the information specified in either paragraph (i)(6)(i) or (ii) of this section.

(i) Hourly records of whether the flow indicator specified under §63.1252(b)(1) was operating and whether a diversion was detected at any time during the hour, as well as records of the times and durations of all periods when the vent stream is diverted from the control device or the flow indicator is not operating.

(ii) Where a seal mechanism is used to comply with §63.1252(b)(2), hourly records of flow are not required. In such cases, the owner or operator shall record that the monthly visual inspection of the seals or closure mechanisms has been done, and shall record the occurrence of all periods when the seal mechanism is broken, the bypass line valve position has changed, or the key for a lock-and-key type lock has been checked out, and records of any car-seal that has broken.

(7) For each inspection conducted in accordance with §63.1258(h)(2) and (3) during which a leak is detected, a record of the information specified in paragraphs (i)(7)(i) through (ix) of this section.

(i) Identification of the leaking equipment.

(ii) The instrument identification numbers and operator name or initials, if the leak was detected using the procedures described in §63.1258(h)(3); or a record that the leak was detected by sensory observations.

(iii) The date the leak was detected and the date of the first attempt to repair the leak.

(iv) Maximum instrument reading measured by the method specified in §63.1258(h)(4) after the leak is successfully repaired or determined to be nonrepairable.

(v) “Repair delayed” and the reason for the delay if a leak is not repaired within 15 calendar days after discovery of the leak.

(vi) The name, initials, or other form of identification of the owner or operator (or designee) whose decision it was that repair could not be effected without a shutdown.

(vii) The expected date of successful repair of the leak if a leak is not repaired within 15 calendar days.

(viii) Dates of shutdowns that occur while the equipment is unrepaired.

(ix) The date of successful repair of the leak.

(8) For each inspection conducted in accordance with §63.1258(h)(3) during which no leaks are detected, a record that the inspection was performed, the date of the inspection, and a statement that no leaks were detected.

(9) For each visual inspection conducted in accordance with §63.1258(h)(2)(i)(B) or (h)(2)(iii)(B) of this section during which no leaks are detected, a record that the inspection was performed, the date of the inspection, and a statement that no leaks were detected.

[63 FR 50326, Sept. 21, 1998, as amended at 65 FR 52613, Aug. 29, 2000; 66 FR 40135, Aug. 2, 2001; 70 FR 25670, May 13, 2005; 71 FR 20459, Apr. 20, 2006]

§ 63.1260 Reporting requirements.

(a) The owner or operator of an affected source shall comply with the reporting requirements of paragraphs (b) through (l) of this section. Applicable reporting requirements of §§63.9 and 63.10 are also summarized in Table 1 of this subpart.

(b) *Initial notification.* The owner or operator shall submit the applicable initial notification in accordance with §63.9(b) or (d).

(c) *Application for approval of construction or reconstruction.* An owner or operator who is subject to §63.5(b)(3) shall submit to the Administrator an application for approval of the construction of a new major affected source, the reconstruction of a major affected source, or the reconstruction of a major source such that the source becomes a major affected source subject to the standards. The application shall be prepared in accordance with §63.5(d).

(d) *Notification of CMS performance evaluation.* An owner or operator who is required by the Administrator to conduct a performance evaluation for a continuous monitoring system shall notify the Administrator of the date of the performance evaluation as specified in §63.8(e)(2).

(e) *Precompliance report.* The Precompliance report shall be submitted at least 6 months prior to the compliance date of the standard. For new sources, the Precompliance report shall be submitted to the Administrator with the application for approval of construction or reconstruction. The Administrator shall have 90 days to approve or disapprove the plan. The plan shall be considered approved if the Administrator either approves the plan in writing, or fails to disapprove the plan in writing. The 90 day period shall begin when the Administrator receives the request. If the request is denied, the owner or operator must still be in compliance with the standard by the compliance date. To change any of the information submitted in the report, the owner or operator shall notify the Administrator 90 days before the planned change is to be implemented; the change shall be considered approved if the Administrator either approves the change in writing, or fails to disapprove the change in writing. The Precompliance report shall include:

(1) Requests for approval to use alternative monitoring parameters or requests to set monitoring parameters according to §63.1258(b)(4).

(2) Descriptions of the daily or per batch demonstrations to verify that control devices subject to §63.1258(b)(1)(i) are operating as designed.

(3) A description of test conditions, and the corresponding monitoring parameter values for parameters that are set according to §63.1258(b)(3)(ii)(C).

(4) For owners and operators complying with the requirements of §63.1252(e), the P2 demonstration summary required in §63.1257(f).

(5) Data and rationale used to support an engineering assessment to calculate uncontrolled emissions from process vents as required in §63.1257(d)(2)(ii).

(6) Data and other information supporting the determination of annual average concentrations by process simulation as required in §63.1257(e)(1)(ii).

(7) Bench scale or pilot-scale test data and rationale used to determine annual average concentrations as required in §63.1257(e)(1)(ii)(C).

(f) *Notification of Compliance Status report.* The Notification of Compliance Status report required under §63.9 shall be submitted no later than 150 days after the compliance date and shall include:

(1) The results of any applicability determinations, emission calculations, or analyses used to identify and quantify HAP emissions from the affected source.

(2) The results of emissions profiles, performance tests, engineering analyses, design evaluations, or calculations used to demonstrate compliance. For performance tests, results should include descriptions of sampling and analysis procedures and quality assurance procedures.

(3) Descriptions of monitoring devices, monitoring frequencies, and the values of monitored parameters established during the initial compliance determinations, including data and calculations to support the levels established.

(4) Listing of all operating scenarios.

(5) Descriptions of worst-case operating and/or testing conditions for control devices.

(6) Identification of emission points subject to overlapping requirements described in §63.1250(h) and the authority under which the owner or operator will comply.

(7) Anticipated periods of planned routine maintenance of a CCCD subject to §63.1252(h) during the period between the compliance date and the end of the period covered by the first Periodic report, and if applicable, the rationale for why the planned routine maintenance must be performed while a process with a vent subject to §63.1254(a)(3) will be operating.

(g) *Periodic reports.* An owner or operator shall prepare Periodic reports in accordance with paragraphs (g)(1) and (2) of this section and submit them to the Administrator.

(1) *Submittal schedule.* Except as provided in paragraphs (g)(1)(i), (ii), and (iii) of this section, an owner or operator shall submit Periodic reports semiannually. The first report shall be submitted no later than 240 days after the Notification of Compliance Status is due and shall cover the 6-month period beginning on the date the Notification of Compliance Status is due. Each subsequent Periodic report shall cover the 6-month period following the preceding period.

(i) When the Administrator determines on a case-by-case basis that more frequent reporting is necessary to accurately assess the compliance status of the affected source; or

(ii) Quarterly reports shall be submitted when the source experiences an exceedance of a temperature limit monitored according to the provisions of §63.1258(b)(1)(iii) or an exceedance of the outlet concentration monitored according to the provisions of §63.1258(b)(1)(x) or (b)(5). Once an affected source reports quarterly, the affected source shall follow a quarterly reporting format until a request to reduce reporting frequency is approved. If an owner or operator submits a request to reduce the frequency of reporting, the provisions in §63.10(e)(3)(ii) and (iii) shall apply, except that the phrase “excess emissions and continuous monitoring system performance report and/or summary report” shall mean “Periodic report” for the purposes of this section.

(iii) When a new operating scenario has been operated since the last report, in which case quarterly reports shall be submitted.

(2) *Content of Periodic report.* The owner or operator shall include the information in paragraphs (g)(2)(i) through (vii) of this section, as applicable.

(i) Each Periodic report must include the information in §63.10(e)(3)(vi)(A) through (I) and (K) through (M). For each continuous monitoring system, the Periodic report must also include the information in §63.10(e)(3)(vi)(J).

(ii) If the total duration of excess emissions, parameter exceedances, or excursions for the reporting period is 1 percent or greater of the total operating time for the reporting period, or the total continuous monitoring system downtime for the reporting period is 5 percent or greater of the total operating time for the reporting period, the Periodic report must include the information in paragraphs (g)(2)(ii)(A) through (D) of this section.

(A) Monitoring data, including 15-minute monitoring values as well as daily average values of monitored parameters, for all operating days when the average values were outside the ranges established in the Notification of Compliance Status report or operating permit.

(B) Duration of excursions, as defined in §63.1258(b)(7).

(C) Operating logs and operating scenarios for all operating scenarios for all operating days when the values are outside the levels established in the Notification of Compliance Status report or operating permit.

(D) When a continuous monitoring system is used, the information required in §63.10(c)(5) through (13).

(iii) For each inspection conducted in accordance with §63.1258(h)(2) or (3) during which a leak is detected, the records specified in §63.1259(i)(7) must be included in the next Periodic report.

(iv) For each vapor collection system or closed vent system with a bypass line subject to §63.1252(b)(1), records required under §63.1259(i)(6)(i) of all periods when the vent stream is diverted from the control device through a bypass line. For each vapor collection system or closed vent system with a bypass line subject to §63.1252(b)(2), records required under §63.1259(i)(6)(ii) of all periods in which the seal mechanism is broken, the bypass valve position has changed, or the key to unlock the bypass line valve was checked out.

(v) The information in paragraphs (g)(2)(v)(A) through (D) of this section shall be stated in the Periodic report, when applicable.

(A) No excess emissions.

(B) No exceedances of a parameter.

(C) No excursions.

(D) No continuous monitoring system has been inoperative, out of control, repaired, or adjusted.

(vi) The information specified in paragraphs (g)(2)(vi)(A) through (C) for periods of planned routine maintenance.

(A) For each storage tank subject to control requirements, periods of planned routine maintenance during which the control device does not meet the specifications of §63.1253(b) through (d).

(B) For a CCCD subject to §63.1252(h), periods of planned routine maintenance during the current reporting period and anticipated periods of planned routine maintenance during the next reporting period.

(C) Rationale for why planned routine maintenance of a CCCD subject to §63.1252(h) must be performed while a process with a vent subject to §63.1254(a)(3) will be operating, if applicable. This requirement applies only if the rationale is not in, or differs from that in, the Notification of Compliance Status report.

(vii) Each new operating scenario which has been operated since the time period covered by the last Periodic report. For each new operating scenario, the owner or operator shall provide verification that the operating conditions for any associated control or treatment device have not been exceeded, and that any required calculations and engineering analyses have been performed. For the initial Periodic report, each operating scenario for each process operated since the due date of the Notification of Compliance Status Report shall be submitted.

(viii) If the owner or operator elects to comply with the provisions of §63.1253(b) or (c) by installing a floating roof, the owner or operator shall submit the information specified in §63.122(d) through (f) as applicable. References to §63.152 from §63.122 shall not apply for the purposes of this subpart.

(h) *Notification of process change.* (1) Except as specified in paragraph (h)(2) of this section, whenever a process change is made, or a change in any of the information submitted in the Notification of Compliance Status Report, the owner or operator shall submit the information specified in paragraphs (h)(1)(i) through (iv) of this section with the next Periodic report required under paragraph (g) of this section.

(i) A brief description of the process change.

(ii) A description of any modifications to standard procedures or quality assurance procedures.

(iii) Revisions to any of the information reported in the original Notification of Compliance Status Report under paragraph (f) of this section.

(iv) Information required by the Notification of Compliance Status Report under paragraph (f) of this section for changes involving the addition of processes or equipment.

(2) An owner or operator must submit a report 60 days before the scheduled implementation date of either of the following:

(i) Any change in the activity covered by the Precompliance report.

(ii) A change in the status of a control device from small to large.

(i) *Reports of startup, shutdown, and malfunction.* An owner or operator shall prepare startup, shutdown, and malfunction reports as specified in paragraphs (i)(1) and (2) of this section.

(1) If actions taken by an owner or operator during a startup, shutdown, or malfunction of an affected source (including actions to correct a malfunction) are consistent with the procedures specified in the source's startup, shutdown, and malfunction plan, the owner or operator shall state this fact in a startup, shutdown, or malfunction report. The report shall also include the information specified in §63.1259(a)(3)(i) and (ii) and shall contain the name, title, and signature of the owner or operator or other responsible official who is certifying its accuracy. For the purposes of this subpart, the startup, shutdown, and malfunction reports shall be submitted on the same schedule as the periodic reports required under paragraph (g) of this section instead of the schedule specified in §63.10(d)(5)(i). Reports are only required if a startup, shutdown, or malfunction occurred during the reporting period.

(2) Any time an owner or operator takes an action that is not consistent with the procedures specified in the affected source's startup, shutdown, and malfunction plan, the owner or operator shall submit immediate startup, shutdown, and malfunction reports as specified in §63.10(d)(5)(ii).

(j) *Reports of LDAR programs.* The owner or operator of any affected source implementing the LDAR program specified in §63.1255 of this subpart shall implement the reporting requirements in §63.1255 of this subpart. Copies of all reports shall be retained as records for a period of 5 years, in accordance with the requirements of §63.10(b)(1).

(k) *Reports of emissions averaging.* The owner or operator of any affected source that chooses to comply with the requirements of §63.1252(d) shall submit the implementation plan described in §63.1259(e) 6 months prior to the compliance date of the standard and the following information in the periodic reports:

(1) The records specified in §63.1259(e) for each process or storage tank included in the emissions average;

(2) All information as specified in paragraph (g) of this section for each process or storage tank included in the emissions average;

(3) Any changes of the processes or storage tanks included in the average.

(4) The calculation of the overall percent reduction efficiency for the reporting period.

(5) Changes to the Implementation Plan which affect the calculation methodology of uncontrolled or controlled emissions or the hazard or risk equivalency determination.

(6) Every second semiannual or fourth quarterly report, as appropriate, shall include the results according to §63.1259(e)(4) to demonstrate the emissions averaging provisions of §§63.1252(d), 63.1257(g) and (h), 63.1258(f), and 63.1259(f) are satisfied.

(l) *Notification of performance test and test plan.* The owner or operator of an affected source shall notify the Administrator of the planned date of a performance test at least 60 days before the test in accordance with §63.7(b). The owner or operator also must submit the test plan required by §63.7(c) and the emission profile required by 63.1257(b)(8)(ii) with the notification of the performance test.

(m) *Request for extension of compliance.* An owner or operator may submit to the Administrator a request for an extension of compliance in accordance with §63.1250(f)(4).

[63 FR 50326, Sept. 21, 1998, as amended at 65 FR 52614, Aug. 29, 2000; 66 FR 40135, Aug. 2, 2001]

§ 63.1261 Implementation and enforcement.

(a) This subpart can be implemented and enforced by the U.S. EPA, or a delegated authority such as the applicable State, local, or Tribal agency. If the U.S. EPA Administrator has delegated authority to a State, local, or Tribal agency, then that agency, in addition to the U.S. EPA, has the authority to implement and enforce this subpart. Contact the applicable U.S. EPA Regional Office to find out if implementation and enforcement of this subpart is delegated to a State, local, or Tribal agency.

(b) In delegating implementation and enforcement authority of this subpart to a State, local, or Tribal agency under subpart E of this part, the authorities contained in paragraph (c) of this section are retained by the Administrator of U.S. EPA and cannot be transferred to the State, local, or Tribal agency.

(c) The authorities that cannot be delegated to State, local, or Tribal agencies are as specified in paragraphs (c)(1) through (4) of this section.

(1) Approval of alternatives to the requirements in §§63.1250 and 63.1252 through 63.1256. Where these standards reference another subpart, the cited provisions will be delegated according to the delegation provisions of the referenced subpart.

(2) Approval of major alternatives to test methods under §63.7(e)(2)(ii) and (f), as defined in §63.90, and as required in this subpart.

(3) Approval of major alternatives to monitoring under §63.8(f), as defined in §63.90, and as required in this subpart.

(4) Approval of major alternatives to recordkeeping and reporting under §63.10(f), as defined in §63.90, and as required in this subpart.

[68 FR 37356, June 23, 2003]

Table 1 to Subpart GGG of Part 63—General Provisions Applicability to Subpart GGG

General provisions reference	Summary of requirements	Applies to subpart GGG	Comments
63.1(a)(1)	General applicability of the General Provisions	Yes	Additional terms defined in §63.1251; when overlap between subparts A and GGG of this part, subpart GGG takes precedence.
63.1(a)(2–7)		Yes	
63.1(a)(8)		No	Discusses state programs.

63.1(a)(9–14)		Yes	
63.1(b)(1)	Initial applicability determination	Yes	Subpart GGG clarifies the applicability in §63.1250.
63.1(b)(2)	Title V operating permit—see part 70	Yes	All major affected sources are required to obtain a title V permit.
63.1(b)(3)	Record of the applicability determination	Yes	All affected sources are subject to subpart GGG according to the applicability definition of subpart GGG.
63.1(c)(1)	Applicability after standards are set	Yes	Subpart GGG clarifies the applicability of each paragraph of subpart A to sources subject to subpart GGG.
63.1(c)(2)	Title V permit requirement	No	All major affected sources are required to obtain a title V permit. Area sources are not subject to subpart GGG.
63.1(c)(3)	Reserved		
63.1(c)(4)	Requirements for existing source that obtains an extension of compliance	Yes	
§63.1(c)(5)	Notification requirements for an area source that increases HAP emissions to major source levels	Yes	
63.1(d)	[Reserved]	NA	
63.1(e)	Applicability of permit program before a relevant standard has been set	Yes	
63.2	Definitions.	Yes	Additional terms defined in §63.1251; when overlap between subparts A and GGG of this part occurs, subpart GGG takes precedence.
63.3	Units and abbreviations.	Yes	Other units used in subpart GGG are defined in that subpart.
63.4	Prohibited activities.	Yes	
63.5(a)	Construction and reconstruction—applicability	Yes	Except replace the terms “source” and “stationary source” with

			“affected source”.
63.5(b)(1)	Upon construction, relevant standards for new sources	Yes	
63.5(b)(2)	[Reserved]	NA	
63.5(b)(3)	New construction/reconstruction	Yes	Except for changes and additions authorized under §52.2454 of this title. However, the requirement to submit the Precompliance report at least 90 days before the compliance date still applies.
63.5(b)(4)	Construction/reconstruction notification	Yes	
63.5(b)(5)	Construction/reconstruction compliance	Yes	
63.5(b)(6)	Equipment addition or process change	Yes	
63.5(c)	[Reserved]	NA	
63.5(d)	Application for approval of construction/reconstruction	Yes	Except for certain provisions identified in 63.1259(a)(5)
§63.5(e)	Construction/reconstruction approval	Yes	
63.5(f)	Construction/reconstruction approval based on prior State review.	Yes	Except replace “source” with “affected source”.
63.6(a)(1)	Compliance with standards and maintenance requirements	Yes	
63.6(a)(2)	Requirements for area source that increases emissions to become major	Yes	
63.6(b)(1–2)	Compliance dates for new and reconstructed sources	No	Subpart GGG specifies compliance dates.
63.6(b)(3–6)	Compliance dates for area sources that become major sources	Yes	
63.6 (b)(7)	Compliance dates for new sources resulting from new unaffected area sources becoming subject to standards	No	Subpart GGG specifies NS applicability and compliance dates

63.6(c)	Compliance dates for existing sources	Yes	Except replace “source” with “affected source”. Subpart GGG specifies compliance dates.
63.6(e)	Operation and maintenance requirements	Yes	Startup, Shutdown, Malfunction Plan requirements specifically include malfunction process, control and monitoring equipment.
63.6(f)–(g)	Compliance with nonopacity and alternative nonopacity emission standards	Yes	Except that subpart GGG specifies performance test conditions.
63.6(h)	Opacity and visible emission standards	No	Subpart GGG does not contain any opacity or visible emission standards.
§63.6(i)(1) through (7)	Requests for compliance extensions	No	§63.1250(f)(6) specifies provisions for compliance extensions.
§63.6(i)(8) through (14)	Approval of compliance extensions	Yes	Except references to §63.6(i)(4) through (6) mean §63.1250(f)(6).
63.6(j)	Exemption from compliance with emission standards	Yes	
63.7(a)(1)	Performance testing requirements	Yes	Subpart GGG also specifies required testing and compliance procedures.
63.7(a)(2)(i)–(ix)		Yes	Except substitute “150 days” instead of “180 days.”
63.7(a)(3)		Yes	
63.7(b)(1)	Notification of performance test	Yes	
63.7(b)(2)	Notification of delay in conducting a scheduled performance test	Yes	
63.7(c)	Quality assurance program	Yes	Except that the test plan must be submitted with the notification of the performance test.
63.7(d)	Performance testing facilities.	Yes	Except replace “source” with “affected source”.
63.7(e)	Conduct of performance tests.	Yes	Subpart GGG also contains test methods and procedures specific to pharmaceutical sources.

63.7(f)	Use of alternative test method	Yes	
63.7(g)	Data analysis, recordkeeping, and reporting	Yes	
63.7(h)	Waiver of performance tests	Yes	
63.8(a)	Monitoring requirements	Yes	See §63.1258.
63.8(b)(1)	Conduct of monitoring	Yes	
63.8(b)(2)	CMS and combined effluents	No	§63.1258 of subpart GGG provides specific CMS requirements.
63.8(b)(3)–(c)(4)	CMS requirements	Yes	§63.1259 also specifies recordkeeping for CMS.
63.8(c)(5)	COMS operation requirements	No	
63.8 (c)(6)–(8)	CMS calibration and malfunction provisions	No	Calibration procedures are provided in §63.1258.
63.8(d)	CMS quality control program	Yes	
63.8(e)(1)	Performance evaluations of CMS	Yes	
63.8(e)(2)	Notification of performance evaluation	Yes	
63.8(e)(3–4)	CMS requirements/alternatives	Yes	
§63.8(e)(5)(i)	Reporting performance evaluation results	Yes	See §63.1260(a).
63.1260 (a).			
63.8(e)(5)(ii)	Results of COMS performance evaluation	No	Subpart GGG does not contain any opacity or visible emission standards.
63.8(f)–(g)	Alternative monitoring method/reduction of monitoring data	Yes	
63.9(a)–(d)	Notification requirements—Applicability and general information	Yes	§63.1260 (b) also specifies initial notification requirement.
63.9(e)	Notification of performance test	Yes	§63.1260 (l) also specifies notification requirement for performance test.
63.9(f)	Notification of opacity and visible emissions observations	No	Subpart GGG does not contain any opacity or visible emission

			standards.
63.9(g)(1)	Additional notification requirements for sources with CMS	Yes	§63.1260 (d) also specifies notification requirement for performance evaluation.
63.9(g)(2)	Notification of compliance with opacity emission standard	No	Subpart GGG does not contain any opacity or visible emission standards.
63.9(g)(3)	Notification that criterion to continue use of alternative to relative accuracy testing has been exceeded	Yes	§63.1260 (d) also specifies notification requirement for performance evaluation.
63.9(h)	Notification of compliance status	Yes	Specified in §63.1260(f). Due 150 days after compliance date.
63.9(i)	Adjustment to time periods or postmark deadlines for submittal and review of required communications	Yes	
63.9(j)	Change in information provided	No	Subpart GGG specifies procedures for notification of changes.
63.10(a)	Recordkeeping requirements	Yes	
63.1259.			
63.10(b)(1)	Records retention	Yes	Also stated in §63.1259.
63.10(b)(2)	Information and documentation to support notifications	No	Subpart GGG specifies recordkeeping requirements.
63.10(b)(3)	Records retention for sources not subject to relevant standard	Yes	Also stated in §63.1259 (a)(2).
63.10(c)–(d)(2)	Other recordkeeping and reporting provisions	Yes	Also stated in §63.1259 (a)(4).
63.10(d)(3)	Reporting results of opacity or visible emissions observations	No	Subpart GGG does not include any opacity or visible emission standards.
63.10(d)(4-5)	Other recordkeeping and reporting provisions	Yes	
63.10(e)	Additional CMS reporting requirements	Yes	
63.10(f)	Waiver of recordkeeping or	Yes	

	reporting requirements.		
63.11	Control device and equipment leak work practice requirements	Yes	
63.13	Addresses of State air pollution control agencies	Yes	
63.14	Incorporations by reference	Yes	
63.15	Availability of information and confidentiality	Yes	

[63 FR 50326, Sept. 21, 1998, as amended at 65 FR 52614, Aug. 29, 2000; 66 FR 40136, Aug. 2, 2001; 73 FR 78213, Dec. 22, 2008]

Table 2 to Subpart GGG of Part 63—Partially Soluble HAP

1,1,1–Trichloroethane (methyl chloroform)	Chloroform
1,1,2,2-Tetrachloroethane	Chloromethane
1,1,2-Trichloroethane	Chloroprene
1,1-Dichloroethylene (vinylidene chloride)	Cumene
1,2-Dibromoethane	Dichloroethyl ether
1,2-Dichloroethane (ethylene dichloride)	Dinitrophenol
1,2-Dichloropropane	Epichlorohydrin
1,3-Dichloropropene	Ethyl acrylate
2,4,5-Trichlorophenol	Ethylbenzene
2-Butanone (mek)	Ethylene oxide
1,4-Dichlorobenzene	Hexachlorobenzene
2-Nitropropane	Hexachlorobutadiene
4–Methyl-2-pentanone (MIBK)	Hexachloroethane
Acetaldehyde	Methyl methacrylate
Acrolein	Methyl-t-butyl ether
Acrylonitrile	Methylene chloride
Allyl chloride	N,N-dimethylaniline
Benzene	Propionaldehyde
Benzyl chloride	Propylene oxide

Biphenyl	Styrene
Bromoform (tribromomethane)	Tetrachloroethene (perchloroethylene)
Bromomethane	Tetrachloromethane (carbon tetrachloride
Butadiene	Toluene
Carbon disulfide	Trichlorobenzene (1,2,4-)
Chlorobenzene	Trichloroethylene
Chloroethane (ethyl chloride)	Trimethylpentane
Vinyl acetate	Xylene (p)
Vinyl chloride	N-hexane
Xylene (m)	
Xylene (o)	

[66 FR 40136, Aug. 2, 2001]

Table 3 to Subpart GGG of Part 63—Soluble HAP

Compound
1,1-Dimethylhydrazine.
1,4-Dioxane.
Acetonitrile.
Acetophenone.
Diethyl sulfate.
Dimethyl sulfate.
Dinitrotoluene.
Ethylene glycol dimethyl ether.
Ethylene glycol monobutyl ether acetate.
Ethylene glycol monomethyl ether acetate.
Isophorone.
Methanol (methyl alcohol).
Nitrobenzene.
Toluidene.
Triethylamine.

[66 FR 40137, Aug. 2, 2001]

Table 4 to Subpart GGG of Part 63—Monitoring Requirements for Control Devices[a]

Control device	Monitoring equipment required	Parameters to be monitored	Frequency
All control devices	1. Flow indicator installed at all bypass lines to the atmosphere and equipped with continuous recorder *or*	1. Presence of flow diverted from the control device to the atmosphere *or*	Hourly records of whether the flow indicator was operating and whether a diversion was detected at any time during each hour.
	2. Valves sealed closed with car-seal or lock-and-key configuration	2. Monthly inspections of sealed valves	Monthly.
Scrubber	Liquid flow rate or pressure drop mounting device. Also a pH monitor if the scrubber is used to control acid emissions	1. Liquid flow rate into or out of the scrubber or the pressure drop across the scrubber	1. Every 15 minutes.
		2. pH of effluent scrubber liquid	2. Once a day.
Thermal incinerator	Temperature monitoring device installed in firebox or in ductwork immediately downstream of firebox[b]	Firebox temperature	Every 15 minutes.
Catalytic incinerator	Temperature monitoring device installed in gas stream immediately before and after catalyst bed	Temperature difference across catalyst bed	Every 15 minutes.
Flare	Heat sensing device installed at the pilot light	Presence of a flame at the pilot light	Every 15 minutes.
Boiler or process heater <44 mega watts and vent stream is not mixed with the primary fuel	Temperature monitoring device installed in firebox[b]	Combustion temperature	Every 15 minutes.
Condenser	Temperature monitoring	Condenser exit	Every 15 minutes.

	device installed at condenser exit	(product side) temperature	
Carbon adsorber (nonregenerative)	None	Operating time since last replacement	N/A.
Carbon adsorber (regenerative)	Stream flow monitoring device, *and*	1. Total regeneration stream mass or volumetric flow during carbon bed regeneration cycle(s)	1. For each regeneration cycle, record the total regeneration stream mass or volumetric flow.
	Carbon bed temperature monitoring device	2. Temperature of carbon bed after regeneration	2. For each regeneration cycle, record the maximum carbon bed-temperature.
		3. Temperature of carbon bed within 15 minutes of completing any cooling cycle(s)	3. Within 15 minutes of completing any cooling cycle, record the carbon bed temperature.
		4. Operating time since end of last regeneration	4. Operating time to be based on worst-case conditions.
		5. Check for bed poisoning	5. Yearly.

[a]As an alternative to the monitoring requirements specified in this table, the owner or operator may use a CEM meeting the requirements of Performance Specifications 8 or 9 of appendix B of part 60 to monitor TOC every 15 minutes.

[b]Monitor may be installed in the firebox or in the ductwork immediately downstream of the firebox before any substantial heat exchange is encountered.

Table 5 to Subpart GGG of Part 63—Control Requirements for Items of Equipment That Meet the Criteria of §63.1252(f)

Item of equipment	Control requirement[a]
Drain or drain hub	(a) Tightly fitting solid cover (TFSC); or
	(b) TFSC with a vent to either a process or to a control device meeting the requirements of §63.1256(h)(2); or
	(c) Water seal with submerged discharge or barrier to protect discharge from wind.

Manhole[b]	(a) TFSC; or
	(b) TSFC with a vent to either a process or to a control device meeting the requirements of §63.1256(h)(2); or
	(c) If the item is vented to the atmosphere, use a TFSC with a properly operating water seal at the entrance or exit to the item to restrict ventilation in the collection system. The vent pipe shall be at least 90 cm in length and not exceeding 10.2 cm in nominal inside diameter.
Lift station	(a) TFSC; or
	(b) TFSC with a vent to either a process or to a control device meeting the requirements of §63.1256(h)(2); or
	(c) If the lift station is vented to the atmosphere, use a TFSC with a properly operating water seal at the entrance or exit to the item to restrict ventilation in the collection system. The vent pipe shall be at least 90 cm in length and not exceeding 10.2 cm in nominal inside diameter. The lift station shall be level controlled to minimize changes in the liquid level.
Trench	(a) TFSC; or
	(b) TFSC with a vent to either a process or to a control device meeting the requirements of §63.1256(h)(2); or
	(c) If the item is vented to the atmosphere, use a TFSC with a properly operating water seal at the entrance or exit to the item to restrict ventilation in the collection system. The vent pipe shall be at least 90 cm in length and not exceeding 10.2 cm in nominal inside diameter.
Pipe	Each pipe shall have no visible gaps in joints, seals, or other emission interfaces.
Oil/Water separator	(a) Equip with a fixed roof and route vapors to a process or equip with a closed-vent system that routes vapors to a control device meeting the requirements of §63.1256(h)(2); or
	(b) Equip with a floating roof that meets the equipment specifications of §60.693(a)(1)(i), (a)(1)(ii), (a)(2), (a)(3), and (a)(4).
Tank	Maintain a fixed roof and consider vents as process vents.[c]

[a]Where a tightly fitting solid cover is required, it shall be maintained with no visible gaps or openings, except during periods of sampling, inspection, or maintenance.

[b]Manhole includes sumps and other points of access to a conveyance system.

[c]A fixed roof may have openings necessary for proper venting of the tank, such as pressure/vacuum vent, j-pipe vent.

[65 FR 52616, Aug. 29, 2000]

Table 6 to Subpart GGG of Part 63—Wastewater—Compliance Options for Wastewaster Tanks

Capacity, m^3	Maximum true vapor pressure, kPa	Control requirements
<75		§63.1256(b)(1).
>75 and <151	<13.1	§63.1256(b)(1).
	>13.1	§63.1256(b)(2).
>151	<5.2	§63.1256(b)(1).
	>5.2	§63.1256(b)(2).

Table 7 to Subpart GGG of Part 63—Wastewater—Inspection and Monitoring Requirements for Waste Management Units

To comply with	Inspection or monitoring requirement	Frequency of inspection or monitoring	Method
TANKS:			
63.1256(b)(3)(i)	Inspect fixed roof and all openings for leaks	Initially Semiannually	Visual.
63.1256(b)(4)	Inspect floating roof in accordance with §§63.120(a)(2) and (a)(3)	See §§63.120(a)(2) and (a)(3)	Visual.
63.1256(b)(5)	Measure floating roof seal gaps in accordance with §§63.120(b)(2)(i) through (b)(4)		See §63.120(b)(2)(i) through (b)(4).
	—Primary seal gaps	Initially Once every 5 years (annually if no secondary seal).	
	—Secondary seal gaps	Initially Semiannually	
63.1256(b)(7) 63.1256(b)(8)	Inspect wastewater tank for control equipment failures and improper work practices	Initially Semiannually	Visual.
SURFACE IMPOUNDMENTS:			
63.1256(c)(1)(i)	Inspect cover and all openings for leaks	Initially Semiannually	Visual.
63.1256(c)(2)	Inspect surface impoundment for control	Initially Semiannually	Visual.

	equipment failures and improper work practices		
CONTAINERS:			
63.1256(d)(1)(i) 63.1256(d)(1)(ii)	Inspect cover and all openings for leaks	Initially Semiannually	Visual.
63.1256(d)(3)(i)	Inspect enclosure and all openings for leaks	Initially Semiannually	Visual.
63.1256(d)(4)	Inspect container for control equipment failures and improper work practices	Initially Semiannually	Visual.
INDIVIDUAL DRAIN SYSTEMS[a]:			
63.1256(e)(1)(i)	Inspect cover and all openings to ensure there are no gaps, cracks, or holes	Initially Semiannually	Visual.
63.1256(e)(2)	Inspect individual drain system for control equipment failures and improper work practices	Initially Semiannually	Visual.
63.1256(e)(4)(i)	Verify that sufficient water is present to properly maintain integrity of water seals	Initially Semiannually	Visual.
63.1256(e)(4)(ii) 63.1256(e)(5)(i)	Inspect all drains using tightly-fitted caps or plugs to ensure caps and plugs are in place and properly installed	Initially Semiannually	Visual.
63.1256(e)(5)(ii)	Inspect all junction boxes to ensure covers are in place and have no visible gaps, cracks, or holes	Initially Semiannually	Visual or smoke test or other means as specified.
63.1256(e)(5)(iii)	Inspect unburied portion of all sewer lines for cracks and gaps	Initially Semiannually	Visual.
OIL-WATER SEPARATORS:			

63.1256(f)(2)(i)	Inspect fixed roof and all openings for leaks	Initially Semiannually	Visual.
63.1256(f)(3)	Measure floating roof seal gaps in accordance with 40 CFR 60.696(d)(1)	Initially[b]	See 40 CFR 60.696(d)(1).
	—Primary seal gaps	Once every 5 years.	
63.1256(f)(3)	—Secondary seal gaps	Initially[b]Annually.	
63.1256(f)(4)	Inspect oil-water separator for control equipment failures and improper work practices	Initially Semiannually	Visual.

[a]As specified in §63.1256(e), the owner or operator shall comply with either the requirements of §63.1256(e)(1) and (2) or §63.1256(e)(4) and (5).

[b]Within 60 days of installation as specified in §63.1256(f)(3).

Table 8 to Subpart GGG of Part 63—Fraction Measured (F_m) for HAP Compounds in Wastewater Streams

Chemical name	CAS No.[a]	F_m
Acetaldehyde	75070	1.00
Acetonitrile	75058	0.99
Acetophenone	98862	0.31
Acrolein	107028	1.00
Acrylonitrile	107131	1.00
Allyl chloride	107051	1.00
Benzene	71432	1.00
Benzyl chloride	100447	1.00
Biphenyl	92524	0.86
Bromoform	75252	1.00
Butadiene (1,3-)	106990	1.00
Carbon disulfide	75150	1.00
Carbon tetrachloride	56235	1.00
Chlorobenzene	108907	0.96
Chloroform	67663	1.00

Chloroprene (2-Chloro-1,3-butadiene)	126998	1.00
Cumene	98828	1.00
Dichlorobenzene (p-1,4-)	106467	1.00
Dichloroethane (1,2-) (Ethylene dichloride)	107062	1.00
Dichloroethylether (Bis(2-Chloroethyl ether))	111444	0.76
Dichloropropene (1,3-)	542756	1.00
Diethyl sulfate	64675	0.0025
Dimethyl sulfate	77781	0.086
Dimethylaniline (N,N-)	121697	0.00080
Dimethylhydrazine (1,1-)	57147	0.38
Dinitrophenol (2,4-)	51285	0.0077
Dinitrotoluene (2,4-)	121142	0.085
Dioxane (1,4-) (1,4-Diethyleneoxide)	123911	0.87
Epichlorohydrin(1-Chloro-2,3-epoxypropane)	106898	0.94
Ethyl acrylate	140885	1.00
Ethylbenzene	100414	1.00
Ethyl chloride (Chloroethane)	75003	1.00
Ethylene dibromide (Dibromomethane)	106934	1.00
Ethylene glycol dimethyl ether	110714	0.86
Ethylene glycol monobutyl ether acetate	112072	0.043
Ethylene glycol monomethyl ether acetate	110496	0.093
Ethylene oxide	75218	1.00
Ethylidene dichloride (1,1-Dichloroethane)	75343	1.00
Hexachlorobenzene	118741	0.97
Hexachlorobutadiene	87683	0.88
Hexachloroethane	67721	0.50
Hexane	110543	1.00
Isophorone	78591	0.47
Methanol	67561	0.85
Methyl bromide (Bromomethane)	74839	1.00

Methyl chloride (Chloromethane)	74873	1.00
Methyl ethyl ketone (2-Butanone)	78933	0.99
Methyl isobutyl ketone (Hexone)	108101	0.98
Methyl methacrylate	80626	1.00
Methyl tert-butyl ether	1634044	1.00
Methylene chloride (Dichloromethane)	75092	1.00
Naphthalene	91203	0.99
Nitrobenzene	98953	0.39
Nitropropane (2-)	79469	0.99
Phosgene	75445	1.00
Propionaldehyde	123386	1.00
Propylene dichloride (1,2-Dichloropropane)	78875	1.00
Propylene oxide	75569	1.00
Styrene	100425	1.00
Tetrachloroethane (1,1,2,2-)	79345	1.00
Tetrachloroethylene (Perchloroethylene)	127184	1.00
Toluene	108883	1.00
Toluidine (o-)	95534	0.15
Trichlorobenzene (1,2,4-)	120821	1.00
Trichloroethane (1,1,1-) (Methyl chloroform)	71556	1.00
Trichloroethane (1,1,2-) (Vinyl Trichloride)	79005	0.98
Trichloroethylene	79016	1.00
Trichlorophenol (2,4,5-)	95954	1.00
Triethylamine	121448	1.00
Trimethylpentane (2,2,4-)	540841	1.00
Vinyl acetate	108054	1.00
Vinyl chloride (Chloroethylene)	75014	1.00
Vinylidene chloride (1,1-Dichloroethylene)	75354	1.00
Xylene (m-)	108383	1.00
Xylene (o-)	95476	1.00

Xylene (p-)	106423	1.00

[a]CAS numbers refer to the Chemical Abstracts Service registry number assigned to specific compounds, isomers, or mixtures of compounds.

Table 9 to Subpart GGG of Part 63—Default Biorates for Soluble HAP

Compound name	Biorate (K1), L/g MLVSS-hr
Acetonitrile	0.100
Acetophenone	0.538
Diethyl sulfate	0.105
Dimethyl hydrazine(1,1)	0.227
Dimethyl sulfate	0.178
Dinitrotoluene(2,4)	0.784
Dioxane(1,4)	0.393
Ethylene glycol dimethyl ether	0.364
Ethylene glycol monobutyl ether acetate	0.496
Ethylene glycol monomethyl ether acetate	0.159
Isophorone	0.598
Methanol	[a]
Nitrobenzene	2.300
Toluidine (-0)	0.859
Triethylamine	1.064

[a]For direct dischargers, the default biorate for methanol is 3.5 L/g MLVSS-hr; for indirect dischargers, the default biorate for methanol is 0.2 L/g MLVSS-hr.

[66 FR 40137, Aug. 2, 2001]

Attachment D – Applicable Portions of the National Emission Standards for Equipment Leaks (Fugitives Emissions Sources) [40 CFR Part 61, Subpart V] [326 IAC 14]

Source Description and Location

Source Name:	Eli Lilly and Company, Lilly Technology Center
Source Location:	1555 South Harding Street, Indianapolis, IN 46168
County:	Marion
SIC Code:	2833, 2834
Permit Renewal No.:	T097-30149-00072
Permit Reviewer:	Josiah Balogun

The following is believed to be the correct text of the sections cited. However, in the event there is any discrepancy between this material and that of these regulatory sections as they appear in the Code of Federal Regulations, July 1, 2011 edition (the CFR), as adopted by reference by IDEM at 326 IAC 1-1-3, the language of the CFR shall govern.

Section E.4 of the permit identifies the applicable sections of this rule

Subpart V—National Emission Standard for Equipment Leaks (Fugitive Emission Sources)

Source: 49 FR 23513, June 6, 1984, unless otherwise noted.

§ 61.240 Applicability and designation of sources.

(a) The provisions of this subpart apply to each of the following sources that are intended to operate in volatile hazardous air pollutant (VHAP) service: pumps, compressors, pressure relief devices, sampling connection systems, open-ended valves or lines, valves, connectors, surge control vessels, bottoms receivers, and control devices or systems required by this subpart.

(b) The provisions of this subpart apply to the sources listed in paragraph (a) after the date of promulgation of a specific subpart in part 61.

(c) While the provisions of this subpart are effective, a source to which this subpart applies that is also subject to the provisions of 40 CFR part 60 only will be required to comply with the provisions of this subpart.

(d) *Alternative means of compliance* —(1) *Option to comply with part 65.* Owners or operators may choose to comply with 40 CFR part 65 to satisfy the requirements of §§61.242–1 through 61.247 for equipment that is subject to this subpart and that is part of the same process unit. When choosing to comply with 40 CFR part 65, the requirements of §§61.245(d) and 61.246(i) and (j) still apply. Other provisions applying to owners or operators who choose to comply with 40 CFR part 65 are provided in 40 CFR 65.1.

(2) *Part 65, subpart C or F.* For owners or operators choosing to comply with 40 CFR part 65, each surge control vessel and bottoms receiver subject to this subpart that meets the conditions specified in table 1 or table 2 of this subpart shall meet the requirements for storage vessels in 40 CFR part 65, subpart C; all other equipment subject to this subpart shall meet the requirements in 40 CFR part 65, subpart F.

(3) *Part 61, subpart A.* Owners or operators who choose to comply with 40 CFR part 65, subpart C or F, must also comply with §§61.01, 61.02, 61.05 through 61.08, 61.10(b) through (d), 61.11, and 61.15 for that equipment. All sections and paragraphs of subpart A of this part that are not mentioned in this paragraph (d)(3) do not apply to owners or operators of equipment subject to this subpart complying with 40 CFR part 65, subpart C or F, except that

provisions required to be met prior to implementing 40 CFR part 65 still apply. Owners and operators who choose to comply with 40 CFR part 65, subpart C or F, must comply with 40 CFR part 65, subpart A.

(4) *Rules referencing this subpart.* Owners or operators referenced to this subpart from subpart F or J of this part may choose to comply with 40 CFR part 65 for all equipment listed in paragraph (a) of this section.

[49 FR 23513, June 6, 1984, as amended at 65 FR 78280, Dec. 14, 2000]

§ 61.241 Definitions.

As used in this subpart, all terms not defined herein shall have the meaning given them in the Act, in subpart A of part 61, or in specific subparts of part 61; and the following terms shall have specific meaning given them:

Bottoms receiver means a tank that collects distillation bottoms before the stream is sent for storage or for further downstream processing.

Closed-vent system means a system that is not open to atmosphere and that is composed of hard-piping, ductwork, connections, and, if necessary, flow-inducing devices that transport gas or vapor from a piece or pieces of equipment to a control device or back to a process.

Connector means flanged, screwed, welded, or other joined fittings used to connect two pipe lines or a pipe line and a piece of equipment. For the purpose of reporting and recordkeeping, connector means flanged fittings that are not covered by insulation or other materials that prevent location of the fittings.

Control device means an enclosed combustion device, vapor recovery system, or flare.

Double block and bleed system means two block valves connected in series with a bleed valve or line that can vent the line between the two block valves.

Duct work means a conveyance system such as those commonly used for heating and ventilation systems. It is often made of sheet metal and often has sections connected by screws or crimping. Hard-piping is not ductwork.

Equipment means each pump, compressor, pressure relief device, sampling connection system, open-ended valve or line, valve, connector, surge control vessel, bottoms receiver in VHAP service, and any control devices or systems required by this subpart.

First attempt at repair means to take rapid action for the purpose of stopping or reducing leakage of organic material to atmosphere using best practices.

In gas/vapor service means that a piece of equipment contains process fluid that is in the gaseous state at operating conditions.

Fuel gas means gases that are combusted to derive useful work or heat.

Fuel gas system means the offsite and onsite piping and flow and pressure control system that gathers gaseous stream(s) generated by onsite operations, may blend them with other sources of gas, and transports the gaseous stream for use as fuel gas in combustion devices or in-process combustion equipment, such as furnaces and gas turbines, either singly or in combination.

Hard-piping means pipe or tubing that is manufactured and properly installed using good engineering judgement and standards such as ASME B31.3, Process Piping (available from the American Society of Mechanical Engineers, PO Box 2900, Fairfield, NJ 07007–2900).

In liquid service means that a piece of equipment is not in gas/vapor service.

In-situ sampling systems means nonextractive samplers or in-line samplers.

In vacuum service means that equipment is operating at an internal pressure which is at least 5 kilopascals (kPa) (0.7 psia) below ambient pressure.

In VHAP service means that a piece of equipment either contains or contacts a fluid (liquid or gas) that is at least 10 percent by weight a volatile hazardous air pollutant (VHAP) as determined according to the provisions of §61.245(d). The provisions of §61.245(d) also specify how to determine that a piece of equipment is not in VHAP service.

In VOC service means, for the purposes of this subpart, that (a) the piece of equipment contains or contacts a process fluid that is at least 10 percent VOC by weight (see 40 CFR 60.2 for the definition of volatile organic compound or VOC and 40 CFR 60.485(d) to determine whether a piece of equipment is not in VOC service) and (b) the piece of equipment is not in heavy liquid service as defined in 40 CFR 60.481.

Maximum true vapor pressure means the equilibrium partial pressure exerted by the total VHAP in the stored or transferred liquid at the temperature equal to the highest calendar-month average of the liquid storage or transfer temperature for liquids stored or transferred above or below the ambient temperature or at the local maximum monthly average temperature as reported by the National Weather Service for liquids stored or transferred at the ambient temperature, as determined:

(1) In accordance with methods described in American Petroleum Institute Publication 2517, Evaporative Loss From External Floating-Roof Tanks (incorporated by reference as specified in §61.18); or

(2) As obtained from standard reference texts; or

(3) As determined by the American Society for Testing and Materials Method D2879–83, Standard Test Method for Vapor Pressure-Temperature Relationship and Initial Decomposition Temperature of Liquids by Isoteniscope (incorporated by reference as specified in §61.18); or

(4) Any other method approved by the Administrator.

Open-ended valve or line means any valve, except pressure relief valves, having one side of the valve seat in contact with process fluid and one side open to atmosphere, either directly or through open piping.

Pressure release means the emission of materials resulting from the system pressure being greater than the set pressure of the pressure relief device.

Process unit means equipment assembled to produce a VHAP or its derivatives as intermediates or final products, or equipment assembled to use a VHAP in the production of a product. A process unit can operate independently if supplied with sufficient feed or raw materials and sufficient product storage facilities.

Process unit shutdown means a work practice or operational procedure that stops production from a process unit or part of a process unit. An unscheduled work practice or operational procedure that stops production from a process unit or part of a process unit for less than 24 hours is not a process unit shutdown. The use of spare equipment and technically feasible bypassing of equipment without stopping production are not process unit shutdowns.

Repaired means that equipment is adjusted, or otherwise altered, to eliminate a leak.

Sampling connection system means an assembly of equipment within a process unit used during periods of representative operation to take samples of the process fluid. Equipment used to take non-routine grab samples is not considered a sampling connection system.

Semiannual means a 6-month period; the first semiannual period concludes on the last day of the last month during the 180 days following initial startup for new sources; and the first semiannual period concludes on the last day of the last full month during the 180 days after the effective date of a specific subpart that references this subpart for existing sources.

Sensor means a device that measures a physical quantity or the change in a physical quantity, such as temperature, pressure, flow rate, pH, or liquid level.

Stuffing box pressure means the fluid (liquid or gas) pressure inside the casing or housing of a piece of equipment, on the process side of the inboard seal.

Surge control vessel means feed drums, recycle drums, and intermediate vessels. Surge control vessels are used within a process unit when in-process storage, mixing, or management of flow rates of volumes is needed on a recurring or ongoing basis to assist in production of a product.

Volatile hazardous air pollutant or *VHAP* means a substance regulated under this part for which a standard for equipment leaks of the substance has been proposed and promulgated. Benzene is a VHAP. Vinyl chloride is a VHAP.

[49 FR 23513, June 6, 1984; 49 FR 38946, Oct. 2, 1984, as amended at 51 FR 34915, Sept. 30, 1986; 54 FR 38076, Sept. 14, 1989; 65 FR 62158, Oct. 17, 2000; 65 FR 78280, Dec. 14, 2000]

§ 61.242-1 Standards: General.

(a) Each owner or operator subject to the provisions of this subpart shall demonstrate compliance with the requirements of §§61.242–1 to 61.242–11 for each new and existing source as required in 40 CFR 61.05, except as provided in §§61.243 and 61.244.

(b) Compliance with this subpart will be detemined by review of records, review of performance test results, and inspection using the methods and procedures specified in §61.245.

(c)(1) An owner or operator may request a determination of alternative means of emission limitation to the requirements of §§61.242–2, 61.242–3, 61.242–5, 61.242–6, 61.242–7, 61.242–8, 61.242–9 and 61.242–11 as provided in §61.244.

(2) If the Administrator makes a determination that a means of emission limitation is at least a permissible alternative to the requirements of §61.242–2, 61.242–3, 61.242–5, 61.242–6, 61.242–7, 61.242–8, 61.242–9 or 61.242–11, an owner or operator shall comply with the requirements of that determination.

(d) Each piece of equipment to which this subpart applies shall be marked in such a manner that it can be distinquished readily from other pieces of equipment.

(e) Equipment that is in vacuum service is excluded from the requirements of §61.242–2, to §61.242–11 if it is identified as required in §61.246(e)(5).

[49 FR 23513, June 6, 1984; 49 FR 38946, Oct. 2, 1984]

§ 61.242-2 Standards: Pumps.

(a)(1) Each pump shall be monitored monthly to detect leaks by the methods specified in §61.245(b), except as provided in §61.242–1(c) and paragraphs (d), (e), (f) and (g) of this section.

(2) Each pump shall be checked by visual inspection each calendar week for indications of liquids dripping from the pump seal.

(b)(1) If an instrument reading of 10,000 ppm or greater is measured, a leak is detected.

(2) If there are indications of liquids dripping from the pump seal, a leak is detected.

(c)(1) When a leak is detected, it shall be repaired as soon as practicable, but not later than 15 calendar days after it is detected, except as provided in §61.242–10.

(2) A first attempt at repair shall be made no later than 5 calendar days after each leak is detected.

(d) Each pump equipped with a dual mechanical seal system that includes a barrier fluid system is exempt from the requirements of paragraphs (a) and (b) of this section, provided the following requirements are met:

(1) Each dual mechanical seal system is:

(i) Operated with the barrier fluid at a pressure that is at all times greater than the pump stuffing box pressure; or

(ii) Equipped with a barrier fluid degassing reservoir that is routed to a process or fuel gas system or connected by a closed-vent system to a control device that complies with the requirements of §61.242–11; or

(iii) Equipped with a system that purges the barrier fluid into a process stream with zero VHAP emissions to atmosphere.

(2) The barrier fluid is not in VHAP service and, if the pump is covered by standards under 40 CFR part 60, is not in VOC service.

(3) Each barrier fluid system is equipped with a sensor that will detect failure of the seal system, the barrier fluid system, or both.

(4) Each pump is checked by visual inspection each calendar week for indications of liquids dripping from the pump seal.

(i) If there are indications of liquid dripping from the pump seal at the time of the weekly inspection, the pump shall be monitored as specified in §61.245 to determine the presence of VOC and VHAP in the barrier fluid.

(ii) If the monitor reading (taking into account any background readings) indicates the presence of VHAP, a leak is detected. For the purpose of this paragraph, the monitor may be calibrated with VHAP, or may employ a gas chromatography column to limit the response of the monitor to VHAP, at the option of the owner or operator.

(iii) If an instrument reading of 10,000 ppm or greater (total VOC) is measured, a leak is detected.

(5) Each sensor as described in paragraph (d)(3) of this section is checked daily or is equipped with an audible alarm.

(6)(i) The owner or operator determines, based on design considerations and operating experience, criteria applicable to the presence and frequency of drips and to the sensor that indicates failure of the seal system, the barrier fluid system, or both.

(ii) If indications of liquids dripping from the pump seal exceed the criteria established in paragraph (d)(6)(i) of this section, or if, based on the criteria established in paragraph (d)(6)(i) of this section, the sensor indicates failure of the seal system, the barrier fluid system, or both, a leak is detected.

(iii) When a leak is detected, it shall be repaired as soon as practicable, but no later than 15 calendar days after it is detected, except as provided in §61.242–10.

(iv) A first attempt at repair shall be made no later than five calendar days after each leak is detected.

(e) Any pump that is designated, as described in §61.246(e)(2), for no detectable emissions, as indicated by an instrument reading of less than 500 ppm above background, is exempt from the requirements of paragraphs (a), (c), and (d) if the pump:

(1) Has no externally actuated shaft penetrating the pump housing,

(2) Is demonstrated to be operating with no detectable emissions, as indicated by an instrument reading of less than 500 ppm above background, as measured by the method specified in §61.245(c), and

(3) Is tested for compliance with paragraph (e)(2) initially upon designation, annually, and at other times requested by the Administrator.

(f) If any pump is equipped with a closed-vent system capable of capturing and transporting any leakage from the seal or seals to a process or fuel gas system or to a control device that complies with the requirements of §61.242–11, it is exempt from the requirements of paragraphs (a) through (e) of this section.

(g) Any pump that is designated, as described in §61.246(f)(1), as an unsafe-to-monitor pump is exempt from the monitoring and inspection requirements of paragraphs (a) and (d)(4) through (6) of this section if:

(1) The owner or operator of the pump demonstrates that the pump is unsafe-to-monitor because monitoring personnel would be exposed to an immediate danger as a consequence of complying with paragraph (a) of this section; and

(2) The owner or operator of the pump has a written plan that requires monitoring of the pump as frequently as practicable during safe-to-monitor times but not more frequently than the periodic monitoring schedule otherwise applicable, and repair of the equipment according to the procedures in paragraph (c) of this section if a leak is detected.

(h) Any pump that is located within the boundary of an unmanned plant site is exempt from the weekly visual inspection requirement of paragraphs (a)(2) and (d)(4) of this section, and the daily requirements of paragraph (d)(5) of this section, provided that each pump is visually inspected as often as practicable and at least monthly.

[49 FR 23513, June 6, 1984, as amended at 49 FR 38946, Oct. 2, 1984; 55 FR 28349, July 10, 1990; 65 FR 78281, Dec. 14, 2000]

§ 61.242-3 Standards: Compressors.

(a) Each compressor shall be equipped with a seal system that includes a barrier fluid system and that prevents leakage of process fluid to atmosphere, except as provided in §61.242–1(c) and paragraphs (h) and (i) of this section.

(b) Each compressor seal system as required in paragraph (a) shall be:

(1) Operated with the barrier fluid at a pressure that is greater than the compressor stuffing box pressure; or

(2) Equipped with a barrier fluid system degassing reservoir that is routed to a process or fuel gas system or connected by a closed-vent system to a control device that complies with the requirements of §61.242–11; or

(3) Equipped with a system that purges the barrier fluid into a process stream with zero VHAP emissions to atmosphere.

(c) The barrier fluid shall not be in VHAP service and, if the compressor is covered by standards under 40 CFR part 60, shall not be in VOC service.

(d) Each barrier fluid system as described in paragraphs (a)–(c) of this section shall be equipped with a sensor that will detect failure of the seal system, barrier fluid system, or both.

(e)(1) Each sensor as required in paragraph (d) of this section shall be checked daily or shall be equipped with an audible alarm unless the compressor is located within the boundary of an unmanned plant site.

(2) The owner or operator shall determine, based on design considerations and operating experience, a criterion that indicates failure of the seal system, the barrier fluid system, or both.

(f) If the sensor indicates failure of the seal system, the barrier fluid system, or both based on the criterion determined under paragraph (e)(2) of this section, a leak is detected.

(g)(1) When a leak is detected, it shall be repaired as soon as practicable, but not later than 15 calendar days after it is detected, except as provided in §61.242–10.

(2) A first attempt at repair shall be made no later than 5 calendar days after eack leak is detected.

(h) A compressor is exempt from the requirements of paragraphs (a) and (b) of this section if it is equipped with a closed-vent system to capture and transport leakage from the compressor drive shaft back to a process or fuel gas system or to a control device that complies with the requirements of §61.242–11, except as provided in paragraph (i) of this section.

(i) Any Compressor that is designated, as described in §61.246(e)(2), for no detectable emission as indicated by an instrument reading of less than 500 ppm above background is exempt from the requirements of paragraphs (a)–(h) if the compressor:

(1) Is demonstrated to be operating with no detectable emissions, as indicated by an instrument reading of less than 500 ppm above background, as measured by the method specified in §61.245(c); and

(2) Is tested for compliance with paragraph (i)(1) initially upon designation, annually, and at other times requested by the Administrator.

[49 FR 23513, June 6, 1984; 49 FR 38946, Oct. 2, 1984, as amended at 65 FR 78281, Dec. 14, 2000]

§ 61.242-4 Standards: Pressure relief devices in gas/vapor service.

(a) Except during pressure releases, each pressure relief device in gas/vapor service shall be operated with no detectable emissions, as indicated by an instrument reading of less than 500 ppm above background, as measured by the method specified in §61.245(c).

(b)(1) After each pressure release, the pressure relief device shall be returned to a condition of no detectable emissions, as indicated by an instrument reading of less than 500 ppm above background, as soon as practicable, but no later than 5 calendar days after each pressure release, except as provided in §61.242–10.

(2) No later than 5 calendar days after the pressure release, the pressure relief device shall be monitored to confirm the condition of no detectable emissions, as indicated by an instrument reading of less than 500 ppm above background, as measured by the method specified in §61.245(c).

(c) Any pressure relief device that is routed to a process or fuel gas system or equipped with a closed-vent system capable of capturing and transporting leakage from the pressure relief device to a control device as described in §61.242–11 is exempt from the requirements of paragraphs (a) and (b) of this section.

(d)(1) Any pressure relief device that is equipped with a rupture disk upstream of the pressure relief device is exempt from the requirements of paragraphs (a) and (b) of this section, provided the owner or operator complies with the requirements in paragraph (d)(2) of this section.

(2) After each pressure release, a new rupture disk shall be installed upstream of the pressure relief device as soon as practicable, but no later than 5 calendar days after each pressure release, except as provided in §61.242–10.

[49 FR 23513, June 6, 1984; 49 FR 38946, Oct. 2, 1984, as amended at 65 FR 78281, Dec. 14, 2000]

§ 61.242-5 Standards: Sampling connecting systems.

(a) Each sampling connection system shall be equipped with a closed-purge, closed-loop, or closed vent system, except as provided in §61.242–1(c). Gases displaced during filling of the sample container are not required to be collected or captured.

(b) Each closed-purge, closed-loop, or closed vent system as required in paragraph (a) of this section shall comply with the requirements specified in paragraphs (b)(1) through (4) of this section:

(1) Return the purged process fluid directly to the process line; or

(2) Collect and recycle the purged process fluid; or

(3) Be designed and operated to capture and transport all the purged process fluid to a control device that complies with the requirements of §61.242–11; or

(4) Collect, store, and transport the purged process fluid to any of the following systems or facilities:

(i) A waste management unit as defined in 40 CFR 63.111 if the waste management unit is subject to and operated in compliance with the provisions of 40 CFR part 63, subpart G, applicable to Group 1 wastewater streams; or

(ii) A treatment, storage, or disposal facility subject to regulation under 40 CFR part 262, 264, 265, or 266; or

(iii) A facility permitted, licensed, or registered by a State to manage municipal or industrial solid waste, if the process fluids are not hazardous waste as defined in 40 CFR part 261.

(c) In-situ sampling systems and sampling systems without purges are exempt from the requirements of paragraphs (a) and (b) of this section.

[65 FR 78281, Dec. 14, 2000]

§ 61.242-6 Standards: Open-ended valves or lines.

(a)(1) Each open-ended valve or line shall be equipped with a cap, blind flange, plug, or a second valve, except as provided in §61.242–1(c).

(2) The cap, blind flange, plug, or second valve shall seal the open end at all times except during operations requiring process fluid flow through the open-ended valve or line.

(b) Each open-ended valve or line equipped with a second valve shall be operated in a manner such that the valve on the process fluid end is closed before the second valve is closed.

(c) When a double block and bleed system is being used, the bleed valve or line may remain open during operations that require venting the line between the block valves but shall comply with paragraph (a) at all other times.

(d) Open-ended valves or lines in an emergency shutdown system which are designed to open automatically in the event of a process upset are exempt from the requirements of paragraphs (a), (b) and (c) of this section.

(e) Open-ended valves or lines containing materials which would autocatalytically polymerize or would present an explosion, serious overpressure, or other safety hazard if capped or equipped with a double block and bleed system as specified in paragraphs (a) through (c) of this section are exempt from the requirements of paragraphs (a) through (c) of this section.

[49 FR 23513, June 6, 1984, as amended at 65 FR 78282, Dec. 14, 2000]

§ 61.242-7 Standards: Valves.

(a) Each valve shall be monitored monthly to detect leaks by the method specified in §61.245(b) and shall comply with paragraphs (b)–(e), except as provided in paragraphs (f), (g), and (h) of this section, §61.243–1 or §61.243–2, and §61.242–1(c).

(b) If an instrument reading of 10,000 ppm or greater is measured, a leak is detected.

(c)(1) Any valve for which a leak is not detected for 2 successive months may be monitored the first month of every quarter, beginning with the next quarter, until a leak is detected.

(2) If a leak is detected, the valve shall be monitored monthly until a leak is not detected for 2 successive months.

(d)(1) When a leak is detected, it shall be repaired as soon as practicable, but no later than 15 calendar days after the leak is detected, except as provided in §61.242–10.

(2) A first attempt at repair shall be made no later than 5 calendar days after each leak is detected.

(e) First attempts at repair include, but are not limited to, the following best practices where practicable:

(1) Tightening of bonnet bolts;

(2) Replacement of bonnet bolts;

(3) Tightening of packing gland nuts; and

(4) Injection of lubricant into lubricated packing.

(f) Any valve that is designated, as described in §61.246(e)(2), for no detectable emissions, as indicated by an instrument reading of less than 500 ppm above background, is exempt from the requirements of paragraph (a) if the valve:

(1) Has no external actuating mechanism in contact with the process fluid;

(2) Is operated with emissions less than 500 ppm above background, as measured by the method specified in §61.245(c); and

(3) Is tested for compliance with paragraph (f)(2) initially upon designation, annually, and at other times requested by the Administrator.

(g) Any valve that is designated, as described in §61.246(f)(1), as an unsafe-to-monitor valve is exempt from the requirements of paragraph (a) if:

(1) The owner or operator of the valve demonstrates that the valve is unsafe to monitor because monitoring personnel would be exposed to an immediate danger as a consequence of complying with paragraph (a); and

(2) The owner or operator of the valve has a written plan that requires monitoring of the valve as frequent as practicable during safe-to-monitor times.

(h) Any valve that is designated, as described in §61.246(f)(2), as a difficult-to-monitor valve is exempt from the requirements of paragraph (a) if:

(1) The owner or operator of the valve demonstrates that the valve cannot be monitored without elevating the monitoring personnel more than 2 meters above a support surface;

(2) The process unit within which the valve is located is an existing process unit; and

(3) The owner or operator of the valve follows a written plan that requires monitoring of the valve at least once per calendar year.

§ 61.242-8 Standards: Pressure relief services in liquid service and connectors.

(a) If evidence of a potential leak is found by visual, audible, olfactory, or any other detection method at pressure relief devices in liquid service and connectors, the owner or operator shall follow either one of the following procedures, except as provided in §61.242–1(c):

(1) The owner or operator shall monitor the equipment within 5 days by the method specified in §61.245(b) and shall comply with the requirements of paragraphs (b) through (d) of this section.

(2) The owner or operator shall eliminate the visual, audible, olfactory, or other indication of a potential leak.

(b) If an instrument reading of 10,000 ppm or greater is measured, a leak is detected.

(c)(1) When a leak is detected, it shall be repaired as soon as practicable, but not later than 15 calendar days after it is detected, except as provided in §61.242–10.

(2) The first attempt at repair shall be made no later than 5 calendar days after each leak is detected.

(d) First attempts at repair include, but are not limited to, the best practices described under §61.242–7(e).

[49 FR 23513, June 6, 1984; 49 FR 38946, Oct. 2, 1984, as amended at 65 FR 78282, Dec. 14, 2000]

§ 61.242-9 Standards: Surge control vessels and bottoms receivers.

Each surge control vessel or bottoms receiver that is not routed back to the process and that meets the conditions specified in table 1 or table 2 of this subpart shall be equipped with a closed-vent system capable of capturing and transporting any leakage from the vessel back to the process or to a control device as described in §61.242–11, except as provided in §61.242–1(c); or comply with the requirements of 40 CFR 63.119(b) or (c).

[65 FR 78282, Dec. 14, 2000]

§ 61.242-10 Standards: Delay of repair.

(a) Delay of repair of equipment for which leaks have been detected will be allowed if repair within 15 days is technically infeasible without a process unit shutdown. Repair of this equipment shall occur before the end of the next process unit shutdown.

(b) Delay of repair of equipment for which leaks have been detected will be allowed for equipment that is isolated from the process and that does not remain in VHAP service.

(c) Delay of repair for valves will be allowed if:

(1) The owner or operator demonstrates that emissions of purged material resulting from immediate repair are greater than the fugitive emissions likely to result from delay of repair, and

(2) When repair procedures are effected, the purged material is collected and destroyed or recovered in a control device complying with §61.242–11.

(d) Delay of repair for pumps will be allowed if:

(1) Repair requires the use of a dual mechanical seal system that includes a barrier fluid system, and

(2) Repair is completed as soon as practicable, but not later than 6 months after the leak was detected.

(e) Delay of repair beyond a process unit shutdown will be allowed for a valve if valve assembly replacement is necessary during the process unit shutdown, valve assembly supplies have been depleted, and valve assembly supplies had been sufficiently stocked before the supplies were depleted. Delay of repair beyond the next process unit shutdown will not be allowed unless the next process unit shutdown occurs sooner than 6 months after the first process unit shutdown.

[49 FR 23513, June 6, 1984, as amended at 65 FR 78282, Dec. 14, 2000]

§ 61.242-11 Standards: Closed-vent systems and control devices.

(a) Owners or operators of closed-vent systems and control devices used to comply with provisions of this subpart shall comply with the provisions of this section, except as provided in §61.242–1(c).

(b) Vapor recovery systems (for example, condensers and absorbers) shall be designed and operated to recover the organic vapors vented to them with an efficiency of 95 percent or greater, or to an exit concentration of 20 parts per million by volume, whichever is less stringent.

(c) Enclosed combustion devices shall be designed and operated to reduce the VHAP emissions vented to them with an efficiency of 95 percent or greater, or to an exit concentration of 20 parts per million by volume, on a dry basis, corrected to 3 percent oxygen, whichever is less stringent, or to provide a minimum residence time of 0.50 seconds at a minimum temperature of 760 °C.

(d) Flares shall used to comply with this subpart shall comply with the requirements of §60.18.

(e) Owners or operators of control devices that are used to comply with the provisions of this supbart shall monitor these control devices to ensure that they are operated and maintained in conformance with their design.

(f) Except as provided in paragraphs (i) through (k) of this section, each closed vent system shall be inspected according to the procedures and schedule specified in paragraph (f)(1) or (2) of this section, as applicable.

(1) If the vapor collection system or closed vent system is constructed of hard-piping, the owner or operator shall comply with the following requirements:

(i) Conduct an initial inspection according to the procedures in §61.245(b); and

(ii) Conduct annual visual inspections for visible, audible, or olfactory indications of leaks.

(2) If the vapor collection system or closed vent system is constructed of ductwork, the owner or operator shall:

(i) Conduct an initial inspection according to the procedures in §61.245(b); and

(ii) Conduct annual inspections according to the procedures in §61.245(b).

(g) Leaks, as indicated by an instrument reading greater than 500 parts per million by volume above background or by visual inspections, shall be repaired as soon as practicable except as provided in paragraph (h) of this section.

(1) A first attempt at repair shall be made no later than 5 calendar days after the leak is detected.

(2) Repair shall be completed no later than 15 calendar days after the leak is detected.

(h) Delay of repair of a closed vent system for which leaks have been detected is allowed if the repair is technically infeasible without a process unit shutdown, or if the owner or operator determines that emissions resulting from immediate repair would be greater than the fugitive emissions likely to result from delay of repair. Repair of such equipment shall be complete by the end of the next process unit shutdown.

(i) If a vapor collection system or closed vent system is operated under a vacuum, it is exempt from the inspection requirements of paragraphs (f)(1)(i) and (2) of this section.

(j) Any parts of the closed vent system that are designated, as described in paragraph (l)(1) of this section, as unsafe-to-inspect are exempt from the inspection requirements of paragraphs (f)(1)(i) and (2) of this section if they comply with the following requirements:

(1) The owner or operator determines that the equipment is unsafe-to-inspect because inspecting personnel would be exposed to an imminent or potential danger as a consequence of complying with paragraph (f)(1)(i) or (2) of this section; and

(2) The owner or operator has a written plan that requires inspection of the equipment as frequently as practicable during safe-to-inspect times.

(k) Any parts of the closed vent system that are designated, as described in paragraph (l)(2) of this section, as difficult-to-inspect are exempt from the inspection requirements of paragraphs (f)(1)(i) and (2) of this section if they comply with the following requirements:

(1) The owner or operator determines that the equipment cannot be inspected without elevating the inspecting personnel more than 2 meters above a support surface; and

(2) The owner or operator has a written plan that requires inspection of the equipment at least once every 5 years. A closed vent system is exempt from inspection if it is operated under a vacuum.

(l) The owner or operator shall record the following information:

(1) Identification of all parts of the closed vent system that are designated as unsafe-to-inspect, an explanation of why the equipment is unsafe-to-inspect, and the plan for inspecting the equipment.

(2) Identification of all parts of the closed vent system that are designated as difficult-to-inspect, an explanation of why the equipment is difficult-to-inspect, and the plan for inspecting the equipment.

(3) For each inspection during which a leak is detected, a record of the information specified in §61.246(c).

(4) For each inspection conducted in accordance with §61.245(b) during which no leaks are detected, a record that the inspection was performed, the date of the inspection, and a statement that no leaks were detected.

(5) For each visual inspection conducted in accordance with paragraph (f)(1)(ii) of this section during which no leaks are detected, a record that the inspection was performed, the date of the inspection, and a statement that no leaks were detected.

(m) Closed vent systems and control devices used to comply with provisions of this subpart shall be operated at all times when emissions may be vented to them.

[49 FR 23513, June 6, 1984; 49 FR 38946, Oct. 2, 1984, as amended at 51 FR 2702, Jan. 21, 1986; 65 FR 62158, Oct. 17, 2000; 65 FR 78282, Dec. 14, 2000]

§ 61.243-1 Alternative standards for valves in VHAP service—allowable percentage of valves leaking.

(a) An owner or operator may elect to have all valves within a process unit to comply with an allowable percentage of valves leaking of equal to or less than 2.0 percent.

(b) The following requirements shall be met if an owner or operator decides to comply with an allowable percentage of valves leaking:

(1) An owner or operator must notify the Administrator that the owner or operator has elected to have all valves within a process unit to comply with the allowable percentage of valves leaking before implementing this alternative standard, as specified in §61.247(d).

(2) A performance test as specified in paragraph (c) of this section shall be conducted initially upon designation, annually, and at other times requested by the Administrator.

(3) If a valve leak is detected, it shall be repaired in accordance with §61.242–7(d) and (e).

(c) Performance tests shall be conducted in the following manner:

(1) All valves in VHAP service within the process unit shall be monitored within 1 week by the methods specified in §61.245(b).

(2) If an instrument reading of 10,000 ppm or greater is measured, a leak is detected.

(3) The leak percentage shall be determined by dividing the number of valves in VHAP service for which leaks are detected by the number of valves in VHAP service within the process unit.

(d) Owner or operators who elect to have all valves comply with this alternative standard shall not have a process unit with a leak percentage greater than 2.0 percent.

(e) If an owner or operator decides no longer to comply with §61.243–1, the owner or operator must notify the Administrator in writing that the work practice standard described in §61.242–7(a)-(e) will be followed.

§ 61.243-2 Alternative standards for valves in VHAP service—skip period leak detection and repair.

(a)(1) An owner or operator may elect for all valves within a process unit to comply with one of the alternative work practices specified in paragraphs (b)(2) and (3) of this section.

(2) An owner or operator must notify the Administrator before implementing one of the alternative work practices, as specified in §61.247(d).

(b)(1) An owner or operator shall comply initially with the requirements for valves, as described in §61.242–7.

(2) After 2 consecutive quarterly leak detection periods with the percentage of valves leaking equal to or less than 2.0, an owner or operator may begin to skip one of the quarterly leak detection periods for the valves in VHAP service.

(3) After five consecutive quarterly leak detection periods with the percentage of valves leaking equal to or less than 2.0, an owner or operator may begin to skip three of the quarterly leak detection periods for the valves in VHAP service.

(4) If the percentage of valves leaking is greater than 2.0, the owner or operator shall comply with the requirements as described in §61.242–7 but may again elect to use this section.

[49 FR 23513, June 6, 1984, as amended at 65 FR 62158, Oct. 17, 2000]

§ 61.244 Alternative means of emission limitation.

(a) Permission to use an alternative means of emission limitation under section 112(e)(3) of the Clean Air Act shall be governed by the following procedures:

(b) Where the standard is an equipment, design, or operational requirement:

(1) Each owner or operator applying for permission shall be responsible for collecting and verifying test data for an alternative means of emission limitation to test data for the equipment, design, and operational requirements.

(2) The Administrator may condition the permission on requirements that may be necessary to assure operation and maintenance to achieve the same emission reduction as the equipment, design, and operational requirements.

(c) Where the standard is a work practice:

(1) Each owner or operator applying for permission shall be responsible for collecting and verifying test data for an alternative means of emission limitation.

(2) For each source for which permission is requested, the emission reduction achieved by the required work practices shall be demonstrated for a minimum period of 12 months.

(3) For each source for which permission is requested, the emission reduction achieved by the alternative means of emission limitation shall be demonstrated.

(4) Each owner or operator applying for permission shall commit in writing each source to work practices that provide for emission reductions equal to or greater than the emission reductions achieved by the required work practices.

(5) The Administrator will compare the demonstrated emission reduction for the alternative means of emission limitation to the demonstrated emission reduction for the required work practices and will consider the commitment in paragraph (c)(4).

(6) The Administrator may condition the permission on requirements that may be necessary to assure operation and maintenance to achieve the same emission reduction as the required work practices of this subpart.

(d) An owner or operator may offer a unique approach to demonstrate the alternative means of emission limitation.

(e)(1) Manufacturers of equipment used to control equipment leaks of a VHAP may apply to the Administrator for permission for an alternative means of emission limitation that achieves a reduction in emissions of the VHAP achieved by the equipment, design, and operational requirements of this subpart.

(2) The Administrator will grant permission according to the provisions of paragraphs (b), (c), and (d).

[49 FR 23513, June 6, 1984, as amended at 65 FR 62158, Oct. 17, 2000]

§ 61.245 Test methods and procedures.

(a) Each owner or operator subject to the provisions of this subpart shall comply with the test methods and procedures requirements provided in this section.

(b) Monitoring, as required in §§61.242, 61.243, 61.244, and 61.135, shall comply with the following requirements:

(1) Monitoring shall comply with Method 21 of appendix A of 40 CFR part 60.

(2) The detection instrument shall meet the performance criteria of Method 21.

(3) The instrument shall be calibrated before use on each day of its use by the procedures specified in Method 21.

(4) Calibration gases shall be:

(i) Zero air (less than 10 ppm of hydrocarbon in air); and

(ii) A mixture of methane or n-hexane and air at a concentration of approximately, but less than, 10,000 ppm methane or n-hexane.

(5) The instrument probe shall be traversed around all potential leak interfaces as close to the interface as possible as described in Method 21.

(c) When equipment is tested for compliance with or monitored for no detectable emissions, the owner or operator shall comply with the following requirements:

(1) The requirements of paragraphs (b) (1) through (4) shall apply.

(2) The background level shall be determined, as set forth in Method 21.

(3) The instrument probe shall be traversed around all potential leak interfaces as close to the interface as possible as described in Method 21.

(4) The arithmetic difference between the maximum concentration indicated by the instrument and the background level is compared with 500 ppm for determining compliance.

(d)(1) Each piece of equipment within a process unit that can conceivably contain equipment in VHAP service is presumed to be in VHAP service unless an owner or operator demonstrates that the piece of equipment is not in VHAP service. For a piece of equipment to be considered not in VHAP service, it must be determined that the percent VHAP content can be reasonably expected never to exceed 10 percent by weight. For purposes of determining the percent VHAP content of the process fluid that is contained in or contacts equipment, procedures that conform to the methods described in ASTM Method D–2267 (incorporated by the reference as specified in §61.18) shall be used.

(2)(i) An owner or operator may use engineering judgment rather than the procedures in paragraph (d)(1) of this section to demonstrate that the percent VHAP content does not exceed 10 percent by weight, provided that the engineering judgment demonstrates that the VHAP content clearly does not exceed 10 percent by weight. When an owner or operator and the Administrator do not agree on whether a piece of equipment is not in VHAP service, however, the procedures in paragraph (d)(1) of this section shall be used to resolve the disagreement.

(ii) If an owner or operator determines that a piece of equipment is in VHAP service, the determination can be revised only after following the procedures in paragraph (d)(1) of this section.

(3) Samples used in determining the percent VHAP content shall be representative of the process fluid that is contained in or contacts the equipment or the gas being combusted in the flare.

(e)(1) Method 22 of appendix A of 40 CFR part 60 shall be used to determine compliance of flares with the visible emission provisions of this subpart.

(2) The presence of a flare pilot flame shall be monitored using a thermocouple or any other equivalent device to detect the presence of a flame.

(3) The net heating value of the gas being combusted in a flare shall be calculated using the following equation:

$$H_T = K\left(\sum_{i=1}^{n} C_i H_i\right)$$

Where:

H_T= Net heating value of the sample, MJ/scm (BTU/scf); where the net enthalpy per mole of offgas is based on combustion at 25 °C and 760 mm Hg (77 °F and 14.7 psi), but the standard temperature for determining the volume corresponding to one mole is 20 °C (68 °F).

K = conversion constant, 1.740×10^7 (g-mole) (MJ)/(ppm-scm-kcal) (metric units); or 4.674×10^8 ((g-mole) (Btu)/(ppm-scf-kcal)) (English units)

Ci = Concentration of sample component "i" in ppm, as measured by Method 18 of appendix A to 40 CFR part 60 and ASTM D2504–67, 77, or 88 (Reapproved 1993) (incorporated by reference as specified in §61.18).

H_i= net heat of combustion of sample component "i" at 25 °C and 760 mm Hg (77 °F and 14.7 psi), kcal/g-mole. The heats of combustion may be determined using ASTM D2382–76 or 88 or D4809–95 (incorporated by reference as specified in §61.18) if published values are not available or cannot be calculated.

(4) The actual exit velocity of a flare shall be determined by dividing the volumetric flowrate (in units of standard temperature and pressure), as determined by Method 2, 2A, 2C, or 2D, as appropriate, by the unobstructed (free) cross section area of the flare tip.

(5) The maximum permitted velocity, V_{max}, for air-assisted flares shall be determined by the following equation:

$$V_{max} = K_1 + K_2 H_T$$

Where:

V_{max}= Maximum permitted velocity, m/sec (ft/sec).

H_T= Net heating value of the gas being combusted, as determined in paragraph (e)(3) of this section, MJ/scm (Btu/scf).

K_1= 8.706 m/sec (metric units)

= 28.56 ft/sec (English units)

K_2= 0.7084 m^4 /(MJ-sec) (metric units)

= 0.087 ft^4 /(Btu-sec) (English units)

[49 FR 23513, June 6, 1984, as amended at 49 FR 38946, Oct. 2, 1984; 49 FR 43647, Oct. 31, 1984; 53 FR 36972, Sept. 23, 1988; 54 FR 38077, Sept. 14, 1989; 65 FR 62158, Oct. 17, 2000]

§ 61.246 Recordkeeping requirements.

(a)(1) Each owner or operator subject to the provisions of this subpart shall comply with the recordkeeping requirements of this section.

(2) An owner or operator of more than one process unit subject to the provisions of this subpart may comply with the recordkeeping requirements for these process units in one recordkeeping system if the system identifies each record by each process unit.

(b) When each leak is detected as specified in §§61.242–2, 61.242–3, 61.242–7, 61.242–8, and 61.135, the following requirements apply:

(1) A weatherproof and readily visible identification, marked with the equipment identification number, shall be attached to the leaking equipment.

(2) The identification on a valve may be removed after it has been monitored for 2 successive months as specified in §61.242–7(c) and no leak has been detected during those 2 months.

(3) The identification on equipment, except on a valve, may be removed after it has been repaired.

(c) When each leak is detected as specified in §§61.242–2, 61.242–3. 61.242–7, 61.242–8, and 61.135, the following information shall be recorded in a log and shall be kept for 2 years in a readily accessible location:

(1) The instrument and operator identification numbers and the equipment identification number.

(2) The date the leak was detected and the dates of each attempt to repair the leak.

(3) Repair methods applied in each attempt to repair the leak.

(4) “Above 10,000” if the maximum instrument reading measured by the methods specified in §61.245(a) after each repair attempt is equal to or greater than 10,000 ppm.

(5) “Repair delayed” and the reason for the delay if a leak is not repaired within 15 calendar days after discovery of the leak.

(6) The signature of the owner or operator (or designate) whose decision it was that repair could not be effected without a process shutdown.

(7) The expected date of successful repair of the leak if a leak is not repaired within 15 calendar days.

(8) Dates of process unit shutdowns that occur while the equipment is unrepaired.

(9) The date of successful repair of the leak.

(d) The following information pertaining to the design requirements for closed-vent systems and control devices described in §61.242–11 shall be recorded and kept in a readily accessible location:

(1) Detailed schematics, design specifications, and piping and instrumentation diagrams.

(2) The dates and descriptions of any changes in the design specifications.

(3) A description of the parameter or parameters monitored, as required in §61.242–11(e), to ensure that control devices are operated and maintained in conformance with their design and an explanation of why that parameter (or parameters) was selected for the monitoring.

(4) Periods when the closed-vent systems and control devices required in §§61.242–2, 61.242–3, 61.242–4, 61.242–5 and 61.242–9 are not operated as designed, including periods when a flare pilot light does not have a flame.

(5) Dates of startups and shutdowns of the closed-vent systems and control devices required in §§61.242–2, 61.242–3, 61.242–4, 61.242–5 and 61.242–9.

(e) The following information pertaining to all equipment to which a standard applies shall be recorded in a log that is kept in a readily accessible location:

(1) A list of identification numbers for equipment (except welded fittings) subject to the requirements of this subpart.

(2)(i) A list of identification numbers for equipment that the owner or operator elects to designate for no detectable emissions as indicated by an instrument reading of less than 500 ppm above background.

(ii) The designation of this equipment for no detectable emissions shall be signed by the owner or operator.

(3) A list of equipment identification numbers for pressure relief devices required to comply with §61.242–4(a).

(4)(i) The dates of each compliance test required in §§61.242–2(e), 61.242–3(i), 61.242–4, 61.242–7(f), and 61.135(g).

(ii) The background level measured during each compliance test.

(iii) The maximum instrument reading measured at the equipment during each compliance test.

(5) A list of identification numbers for equipment in vacuum service.

(f) The following information pertaining to all valves subject to the requirements of §61.242–7(g) and (h) and to all pumps subject to the requirements of §61.242–2(g) shall be recorded in a log that is kept in a readily accessible location:

(1) A list of identification numbers for valves and pumps that are designated as unsafe to monitor, an explanation for each valve or pump stating why the valve or pump is unsafe to monitor, and the plan for monitoring each valve or pump.

(2) A list of identification numbers for valves that are designated as difficult to monitor, an explanation for each valve stating why the valve is difficult to monitor, and the planned schedule for monitoring each valve.

(g) The following information shall be recorded for valves complying with §61.243–2:

(1) A schedule of monitoring.

(2) The percent of valves found leaking during each monitoring period.

(h) The following information shall be recorded in a log that is kept in a readily accessible location:

(1) Design criterion required in §§61.242–2(d)(5), 61.242–3(e)(2), and 61.135(e)(4) and an explanation of the design criterion; and

(2) Any changes to this criterion and the reasons for the changes.

(i) The following information shall be recorded in a log that is kept in a readily accessible location for use in determining exemptions as provided in the applicability section of this subpart and other specific subparts:

(1) An analysis demonstrating the design capacity of the process unit, and

(2) An analysis demonstrating that equipment is not in VHAP service.

(j) Information and data used to demonstrate that a piece of equipment is not in VHAP service shall be recorded in a log that is kept in a readily accessible location.

[49 FR 23513, June 6, 1984, as amended at 49 FR 38946, Oct. 2, 1984; 54 FR 38077, Sept. 14, 1989; 65 FR 78283, Dec. 14, 2000]

§ 61.247 Reporting requirements.

(a)(1) An owner or operator of any piece of equipment to which this subpart applies shall submit a statement in writing notifying the Administrator that the requirements of §§61.242, 61.245, 61.246, and 61.247 are being implemented.

(2) In the case of an existing source or a new source which has an initial startup date preceding the effective date, the statement is to be submitted within 90 days of the effective date, unless a waiver of compliance is granted under §61.11, along with the information required under §61.10. If a waiver of compliance is granted, the statement is to be submitted on a date scheduled by the Administrator.

(3) In the case of new sources which did not have an initial startup date preceding December 14, 2000, the statement required under paragraph (a)(1) of this section shall be submitted with the application for approval of construction, as described in §61.07.

(4) For owners and operators complying with 40 CFR part 65, subpart C or F, the statement required under paragraph (a)(1) of this section shall notify the Administrator that the requirements of 40 CFR part 65, subpart C or F, are being implemented.

(5) The statement is to contain the following information for each source:

(i) Equipment identification number and process unit identification.

(ii) Type of equipment (for example, a pump or pipeline valve).

(iii) Percent by weight VHAP in the fluid at the equipment.

(iv) Process fluid state at the equipment (gas/vapor or liquid).

(v) Method of compliance with the standard (for example, “monthly leak detection and repair” or “equipped with dual mechanical seals”).

(b) A report shall be submitted to the Administrator semiannually starting 6 months after the initial report required in paragraph (a) of this section, that includes the following information:

(1) Process unit identification.

(2) For each month during the semiannual reporting period,

(i) Number of valves for which leaks were detected as described in §61.242–7(b) of §61.243–2.

(ii) Number of valves for which leaks were not repaired as required in §61.242–7(d).

(iii) Number of pumps for which leaks were detected as described in §61.242–2 (b) and (d)(6).

(iv) Number of pumps for which leaks were not repaired as required in §61.242–2 (c) and (d)(6).

(v) Number of compressors for which leaks were detected as described in §61.242–3(f).

(vi) Number of compressors for which leaks were not repaired as required in §61.242–3(g).

(vii) The facts that explain any delay of repairs and, where appropriate, why a process unit shutdown was technically infeasible.

(3) Dates of process unit shutdowns which occurred within the semiannual reporting period.

(4) Revisions to items reported according to paragraph (a) if changes have occurred since the initial report or subsequent revisions to the initial report.

Note: Compliance with the requirements of §61.10(c) is not required for revisions documented under this paragraph.

(5) The results of all performance tests and monitoring to determine compliance with no detectable emissions and with §§61.243–1 and 61.243–2 conducted within the semiannual reporting period.

(c) In the first report submitted as required in paragraph (a) of this section, the report shall include a reporting schedule stating the months that semiannual reports shall be submitted. Subsequent reports shall be submitted according to that schedule, unless a revised schedule has been submitted in a previous semiannual report.

(d) An owner or operator electing to comply with the provisions of §§61.243–1 and 61.243–2 shall notify the Administrator of the alternative standard selected 90 days before implementing either of the provisions.

(e) An application for approval of construction or modification, §§61.05(a) and 61.07, will not be required if—

(1) The new source complies with the standard, §61.242;

(2) The new source is not part of the construction of a process unit; and

(3) In the next semiannual report required by paragraph (b) of this section, the information in paragraph (a)(5) of this section is reported.

(f) For owners or operators choosing to comply with 40 CFR part 65, subpart C or F, an application for approval of construction or modification, as required under §§61.05 and 61.07 will not be required if:

(1) The new source complies with 40 CFR 65.106 through 65.115 and with 40 CFR part 65, subpart C, for surge control vessels and bottoms receivers;

(2) The new source is not part of the construction of a process unit; and

(3) In the next semiannual report required by 40 CFR 65.120(b) and 65.48(b), the information in paragraph (a)(5) of this section is reported.

[49 FR 23513, June 6, 1984, as amended at 49 FR 38947, Oct. 2, 1984; 54 FR 38077, Sept. 14, 1989; 65 FR 78283, Dec. 14, 2000]

Table 1 to Subpart V of Part 61—Surge Control Vessels and Bottoms Receivers at Existing Sources

Vessel capacity (cubic meters)	Vapor pressure[1] (kilopascals)
$75 \leq$ capacity < 151	≥ 13.1

151 ≤ capacity	≥ 5.2

[1]Maximum true vapor pressure as defined in §61.241.

[65 FR 78283, Dec. 14, 2000]

Table 2 to Subpart V of Part 61—Surge Control Vessels and Bottoms Receivers at New Sources

Vessel capacity (cubic meters)	Vapor pressure[1] (kilopascals)
38 ≤ capacity < 151	≥ 13.1
151 ≤ capacity	≥ 0.7

[1]Maximum true vapor pressure as defined in §61.241.

Attachment E
to a Part 70 Operating Permit

40 CFR 63, Subpart GGGGG— National Emission Standards for Hazardous Air Pollutants: Site Remediation:

Source Background and Description

Source Name:	Eli Lilly and Company, Lilly Technology Center
Source Location:	1555 South Harding Street, Indianapolis, IN 46168
County:	Marion
SIC Code:	2833, 2834
Permit Renewal No.:	T097-30149-00072
Permit Reviewer:	Josiah Balogun

The following is believed to be the correct text of the sections cited. However, in the event there is any discrepancy between this material and that of these regulatory sections as they appear in the Code of Federal Regulations, July 1, 2011 edition (the CFR), as adopted by reference by IDEM at 326 IAC 1-1-3, the language of the CFR shall govern.

Section E.5 of the permit identifies the applicable sections of this rule

Subpart GGGGG—National Emission Standards for Hazardous Air Pollutants: Site Remediation

Source: 68 FR 58190, Oct. 8, 2003, unless otherwise noted.

What This Subpart Covers

§ 63.7880 What is the purpose of this subpart?

This subpart establishes national emissions limitations and work practice standards for hazardous air pollutants (HAP) emitted from site remediation activities. This subpart also establishes requirements to demonstrate initial and continuous compliance with the emissions limitations and work practice standards.

§ 63.7881 Am I subject to this subpart?

(a) This subpart applies to you if you own or operate a facility at which you conduct a site remediation, as defined in §63.7957; and this site remediation, unless exempted under paragraph (b) or (c) of this section, meets all three of the following conditions specified in paragraphs (a)(1) through (3) of this section.

(1) Your site remediation cleans up a remediation material, as defined in §63.7957.

(2) Your site remediation is co-located at your facility with one or more other stationary sources that emit HAP and meet an affected source definition specified for a source category that is regulated by another subpart under 40 CFR part 63. This condition applies regardless whether or not the affected stationary source(s) at your facility is subject to the standards under the applicable subpart(s).

(3) Your facility is a major source of HAP as defined in §63.2, except as specified in paragraph (a)(3)(i) or (ii) of this section. A major source emits or has the potential to emit any single HAP at the rate of 10 tons (9.07 megagrams) or more per year or any combination of HAP at a rate of 25 tons (22.68 megagrams) or more per year.

(i) For production field facilities, as defined in §63.761, only the HAP emissions from the glycol dehydration units and storage vessels with the potential for flash emissions (both as defined in §63.761) shall be aggregated with the HAP emissions from the site remediation activities at the facility for a major source determination.

(ii) For natural gas transmission and storage facilities, HAP emissions shall be aggregated in accordance with the definition of major source in §63.1271 for a major source determination.

(b) You are not subject to this subpart if your site remediation qualifies for any of one of the exemptions listed in paragraphs (b)(1) through (6) of this section.

(1) Your site remediation is not subject to this subpart if the site remediation only cleans up material that does not contain any of the HAP listed in Table 1 of this subpart.

(2) Your site remediation is not subject to this subpart if the site remediation will be performed under the authority of the Comprehensive Environmental Response and Compensation Liability Act (CERCLA) as a remedial action or a non time-critical removal action.

(3) Your site remediation is not subject to this subpart if the site remediation will be performed under a Resource Conservation and Recovery Act (RCRA) corrective action conducted at a treatment, storage and disposal facility (TSDF) that is either required by your permit issued by either the U.S. Environmental Protection Agency (EPA) or a State program authorized by the EPA under RCRA section 3006; required by orders authorized under RCRA; or required by orders authorized under RCRA section 7003.

(4) Your site remediation is not subject to this subpart if the site remediation is conducted at a gasoline service station to clean up remediation material from a leaking underground storage tank.

(5) Your site remediation is not subject to this subpart if the site remediation is conducted at a farm or residential site.

(6) Your site remediation is not subject to this subpart if the site remediation is conducted at a research and development facility that meets the requirements under Clean Air Act (CAA) section 112(c)(7).

(c) Your site remediation activities are not subject to the requirements of this subpart, except for the recordkeeping requirements in this paragraph, provided that you meet the requirements specified in paragraphs (c)(1) through (c)(3) of this section.

(1) You determine that the total quantity of the HAP listed in Table 1 to this subpart that is contained in the remediation material excavated, extracted, pumped, or otherwise removed during all of the site remediations conducted at your facility is less than 1 megagram (Mg) annually. This exemption applies the 1 Mg limit on a facility-wide, annual basis, and there is no restriction to the number of site remediations that can be conducted during this period.

(2) You must prepare and maintain at your facility written documentation to support your determination that the total HAP quantity in your remediation materials for the year is less than 1 Mg. The documentation must include a description of your methodology and data used for determining the total HAP content of the remediation material.

(3) Your Title V permit does not have to be reopened or revised solely to include the recordkeeping requirement specified in paragraph (c)(2) of this section. However, the requirement must be included in your permit the next time the permit is renewed, reopened, or revised for another reason.

(d) Your site remediation is not subject to the requirements of this subpart if all remediation activities at your facility subject to this subpart are completed and you have notified the Administrator in writing that all remediation activities subject to this subpart are completed. You must maintain records of compliance, in accordance with §63.7953, for

each remediation activity that was subject to this subpart. All future remediation activity meeting the applicability criteria in this section must comply with the requirements of this subpart.

[68 FR 58190, Oct. 8, 2003, as amended at 71 FR 69016, Nov. 29, 2006]

§ 63.7882 What site remediation sources at my facility does this subpart affect?

(a) This subpart applies to each new, reconstructed, or existing affected source for your site remediation as designated by paragraphs (a)(1) through (3) of this section.

(1) *Process vents.* The affected source is the entire group of process vents associated with the in-situ and ex-situ remediation processes used at your site to remove, destroy, degrade, transform, or immobilize hazardous substances in the remediation material subject to remediation. Examples of such in-situ remediation processes include, but are not limited to, soil vapor extraction and bioremediation processes. Examples of such ex-situ remediation processes include but are not limited to, thermal desorption, bioremediation, and air stripping processes.

(2) *Remediation material management units.* Remediation material management unit means a tank, surface impoundment, container, oil-water separator, organic-water separator, or transfer system, as defined in §63.7957, and is used at your site to manage remediation material. The affected source is the entire group of remediation material management units used for the site remediations at your site. For the purpose of this subpart, a tank or container that is also equipped with a vent that serves as a process vent, as defined in §63.7957, is not a remediation material management unit, but instead this unit is considered to be a process vent affected source under paragraph (a)(1) of this section.

(3) *Equipment leaks.* The affected source is the entire group of equipment components (pumps, valves, etc.) used to manage remediation materials and meeting both of the conditions specified in paragraphs (a)(3)(i) and (ii) of this section. If either of these conditions do not apply to an equipment component, then that component is not part of the affected source for equipment leaks.

(i) The equipment component contains or contacts remediation material having a concentration of total HAP listed in Table 1 of this subpart equal to or greater than 10 percent by weight.

(ii) The equipment component is intended to operate for 300 hours or more during a calendar year in remediation material service, as defined in §63.7957.

(b) Each affected source for your site is existing if you commenced construction or reconstruction of the affected source before July 30, 2002.

(c) Each affected source for your site is new if you commenced construction or reconstruction of the affected source on or after July 30, 2002. An affected source is reconstructed if it meets the definition of reconstruction in §63.2.

§ 63.7883 When do I have to comply with this subpart?

(a) If you have an existing affected source, you must comply with each emission limitation, work practice standard, and operation and maintenance requirement in this subpart that applies to you no later than October 9, 2006.

(b) If you have a new affected source that manages remediation material other than a radioactive mixed waste as defined in §63.7957, then you must meet the compliance date specified in paragraph (b)(1) or (2) of this section, as applicable to your affected source.

(1) If the affected source's initial startup date is on or before October 8, 2003, you must comply with each emission limitation, work practice standard, and operation and maintenance requirement in this subpart that applies to you by October 8, 2003.

(2) If the affected source's initial startup date is after October 8, 2003, you must comply with each emission limitation, work practice standard, and operation and maintenance requirement in this subpart that applies to you upon initial startup.

(c) If you have a new affected source that manages remediation material that is a radioactive mixed waste as defined in §63.7957, then you must meet the compliance date specified in paragraph (c)(1) or (2) of this section, as applicable to your affected source.

(1) If the affected source's initial startup date is on or before October 8, 2003, you must comply with each emission limitation, work practice standard, and operation and maintenance requirement in this subpart that applies to you no later than October 9, 2006.

(2) If the affected source's initial startup date is after October 8, 2003, you must comply with each emission limitation, work practice standard, and operation and maintenance requirement in this subpart that applies to you upon initial startup.

(d) If your facility is an area source that increases its emissions or its potential to emit such that it becomes a major source of HAP as defined in §63.2, then you must meet the compliance dates specified in paragraphs (d)(1) and (2) of this section.

(1) For each source at your facility that is a new affected source subject to this subpart, you must comply with each emission limitation, work practice standard, and operation and maintenance requirement in this subpart that applies to you upon initial startup.

(2) For all other affected sources subject to this subpart, you must comply with each emission limitation, work practice standard, and operation and maintenance requirement in this subpart that applies to you no later than 3 years after your facility becomes a major source.

(e) You must meet the notification requirements, according to the schedule applicable to your facility, as specified in §63.7950 and in 40 CFR part 63, subpart A. Some of the notifications must be submitted before you are required to comply with the emissions limitations and work practice standards in this subpart.

General Standards

§ 63.7884 What are the general standards I must meet for each site remediation with affected sources?

(a) For each site remediation with an affected source designated under §63.7882, you must meet the standards specified in §§63.7885 through 63.7955, as applicable to your affected source, unless your site remediation meets the requirements for an exemption under paragraph (b) of this section.

(b) A site remediation that is completed within 30 consecutive calendar days according to the conditions in paragraphs (b)(1) through (3) of this section is not subject to the standards under paragraph (a) of this section. This exemption cannot be used for a site remediation involving the staged or intermittent cleanup of remediation material whereby the remediation activities at the site are started, stopped, and then re-started in a series of intervals, with durations less than 30-days per interval, when the time period from the beginning of the first interval to the end of the last interval exceeds 30 days.

(1) The 30 consecutive calendar day period for a site remediation that qualifies for this exemption is determined according to actions taken by you as defined in paragraphs (b)(1)(i) through (iii) of this section.

(i) The first day of the 30-day period is defined as the day on which you initiate any action that removes, destroys, degrades, transforms, immobilizes, or otherwise manages the remediation materials. The following activities, when completed before beginning this initial action, are not counted as part of the 30-day period: Activities to characterize the type and extent of the contamination by collecting and analyzing samples; activities to obtain permits from Federal, State, or local authorities to conduct the site remediation; activities to schedule workers and necessary equipment; and activities to arrange for contractor or third party assistance in performing the site remediation.

(ii) The last day of the 30-day period is defined as the day on which treatment or disposal of all of the remediation materials generated by the cleanup is completed such that the organic constituents in these materials no longer have a reasonable potential for volatilizing and being released to the atmosphere.

(iii) If treatment or disposal of the remediation materials is conducted at an off-site facility where the final treatment or disposal of the material cannot, or may not, be completed within the 30-day exemption period, then the shipment of all of the remediation material generated from your cleanup that is transferred to another party, or shipped to another facility, within the 30-day period, must be performed according to the applicable requirements specified in §63.7936.

(2) For the purpose of complying with paragraph (b)(1) of this section, if you ship or otherwise transfer the remediation material off-site you must include in the applicable shipping documentation, in addition to any notifications and certifications required under §63.7936, a statement that the shipped material was generated by a site remediation activity subject to the conditions of this exemption. The statement must include the date on which you initiated the site remediation activity generating the shipped remediation materials, as specified in paragraph (b)(1)(i) of this section, and the date 30 calendar days following your initiation date.

(3) You must prepare and maintain at your facility written documentation describing the exempted site remediation, and listing the initiation and completion dates for the site remediation.

[71 FR 69016, Nov. 29, 2006]

§ 63.7885 What are the general standards I must meet for my affected process vents?

(a) For the process vents that comprise the affected source designated under §63.7882, you must select and meet the requirements under one of the options specified in paragraph (b) of this section.

(b) For each affected process vent, except as exempted under paragraph (c) of this section, you must meet one of the options in paragraphs (b)(1) through (3) of this section.

(1) You control HAP emissions from the affected process vents according to the standards specified in §§63.7890 through 63.7893.

(2) You determine for the remediation material treated or managed by the process vented through the affected process vents that the average total volatile organic hazardous air pollutant (VOHAP) concentration, as defined in §63.7957, of this material is less than 10 parts per million by weight (ppmw). Determination of the VOHAP concentration is made using the procedures specified in §63.7943.

(3) If the process vent is also subject to another subpart under 40 CFR part 61 or 40 CFR part 63, you control emissions of the HAP listed in Table 1 of this subpart from the affected process vent in compliance with the standards specified in the applicable subpart. This means you are complying with all applicable emissions limitations and work practice standards under the other subpart (*e.g.,* you install and operate the required air pollution controls or have implemented the required work practice to reduce HAP emissions to levels specified by the applicable subpart). This provision does not apply to any exemption of the affected source from the emissions limitations and work practice standards allowed by the other applicable subpart.

(c) A process vent that meets the exemption requirements in paragraphs (c)(1) and (2) of this section is exempted from the requirements in paragraph (b) of this section.

(1) The process vent stream exiting the process vent meets the conditions in either paragraph (c)(1)(i) or (ii) of this section.

(i) The process vent stream flow rate is less than 0.005 cubic meters per minute (m^3 /min) at standard conditions (as defined in 40 CFR 63.2); or

(ii) The process vent stream flow rate is less than 6.0 m^3 /min at standard conditions (as defined in 40 CFR 63.2) and the total concentration of HAP listed in Table 1 of this subpart is less than 20 parts per million by volume (ppmv).

(2) You must demonstrate that the process vent stream meets the applicable exemption conditions in paragraph (c)(1) of this section using the procedures specified in §63.694(m). You must prepare and maintain documentation at your facility to support your determination of the process vent stream flow rate. This documentation must include identification of each process vent exempted under this paragraph and the test results used to determine the process vent stream flow rate and total HAP concentration, as applicable to the exemption conditions for your process vent. You must perform a new determination of the process vent stream flow rate and total HAP concentration, as applicable to the exemption conditions for your process vent, whenever changes to operation of the unit on which the process vent is used could cause the process vent stream conditions to exceed the maximum limits of the exemption.

§ 63.7886 What are the general standards I must meet for my affected remediation material management units?

(a) For each remediation material management unit that is part of an affected source designated by §63.7882, you must select and meet the requirements under one of the options specified in paragraph (b) of this section except for those remediation material management units exempted under paragraph (c) or (d) of this section.

(b) For each affected remediation material management unit, you must meet one of the options in paragraphs (b)(1) through (4) of this section.

(1) You control HAP emissions from the affected remediation material management unit according to the standards specified in paragraphs (b)(1)(i) through (v) of this section, as applicable to the unit.

(i) If the remediation material management unit is a tank, then you control HAP emissions according to the standards specified in §§63.7895 through 63.7898.

(ii) If the remediation material management unit is a container, then you control HAP emissions according to the standards specified in §§63.7900 through 63.7903.

(iii) If the remediation material management unit is a surface impoundment, then you control HAP emissions according to the standards specified in §§63.7905 through 63.7908.

(iv) If the remediation material management unit is an oil-water or organic-water separator, then you control HAP emissions according to the standards specified in §§63.7910 through 63.7913.

(v) If the remediation material management unit is a transfer system, then you control HAP emissions according to the standards specified in §§63.7915 through 63.7918.

(2) You determine that the average total VOHAP concentration, as defined in §63.7957, of the remediation material managed in the remediation material management unit material is less than 500 ppmw. You must follow the requirements in §63.7943 to demonstrate that the VOHAP concentration of the remediation material is less than 500 ppmw. Once the VOHAP concentration for a remediation material has been determined to be less than 500 ppmw, all remediation material management units downstream from the point of determination managing this material meet the requirements of this paragraph unless a remediation process is used that concentrates all, or part of, the remediation material being managed in the unit such that the VOHAP concentration of the material could increase. Any free product returned to the manufacturing process (*e.g.* , recovered oil returned to a storage tank at a refinery) is no longer subject to this subpart.

(3) If the remediation material management unit is also subject to another subpart under 40 CFR part 61 or 40 CFR part 63, you control emissions of the HAP listed in Table 1 of this subpart from the affected remediation material management unit in compliance with the standards specified in the applicable subpart. This means you are complying with all applicable emissions limitations and work practice standards under the other subpart (*e.g.,* you install and operate the required air pollution controls or have implemented the required work practice to reduce HAP emissions to levels specified by the applicable subpart). This provision does not apply to any exemption of the affected source from the emissions limitations and work practice standards allowed by the other applicable subpart.

(4) If the remediation material management unit is an open tank or surface impoundment used for a biological treatment process, you meet the requirements as specified in paragraphs (b)(4)(i) and (ii) of this section.

(i) You demonstrate that the biological treatment process conducted in the open tank or surface impoundment meets the performance levels specified in either §63.684(b)(4)(i) or (ii).

(ii) You monitor the biological treatment process conducted in the open tank or surface impoundment according to the requirements in §63.684(e)(4).

(c) A remediation material management unit is exempted from the requirements in paragraph (b) of this section if this unit is used for cleanup of radioactive mixed waste, as defined in §63.7957, that is subject to applicable regulations, directives, and other requirements under the Atomic Energy Act, the Nuclear Waste Policy Act, or the Waste Isolation Pilot Plant Land Withdrawal Act.

(d) One or a combination of remediation material management units may be exempted at your discretion from the requirements in paragraph (b) of this section provided that the total annual quantity of HAP listed in Table 1 of this subpart contained in the remediation material placed in all of the remediation material management units exempted under this paragraph is less than 1 Mg/yr. For each remediation material management unit you select to be exempted under this provision, you must meet the requirements in paragraphs (d)(1) and (2) of this section.

(1) You must designate each of the remediation material management units you are selecting to be exempted under this paragraph by either submitting to the Administrator a written notification identifying the exempt units or permanently marking the exempt units at the faculty site. If you choose to prepare and submit a written notification, this notification must include a site plan, process diagram, or other appropriate documentation identifying each of the exempt units. If you choose to permanently mark the exempt units, each exempt unit must be marked in such a manner that it can be readily identified as an exempt unit from the other remediation material management units located at the site.

(2) You must prepare an initial determination of the total annual HAP quantity in the remediation material placed in the units exempted under this paragraph. This determination is based on the total quantity of the HAP listed in Table 1 of this subpart as determined at the point where the remediation material is placed in each exempted unit. You must perform a new determination whenever the extent of changes to the quantity or composition of the remediation material placed in the exempted units could cause the total annual HAP content in the remediation material to exceed 1 Mg/yr. You must maintain documentation to support the most recent determination of the total annual HAP quantity. This documentation must include the basis and data used for determining the organic HAP content of the remediation material.

[68 FR 58190, Oct. 8, 2003, as amended at 71 FR 69017, Nov. 29, 2006]

§ 63.7887 What are the general standards I must meet for my affected equipment leak sources?

(a) You must control HAP emissions from equipment leaks from each equipment component that is part of the affected source by implementing leak detection and control measures according to the standards specified in §§63.7920 through 63.7922 unless you elect to meet the requirements in paragraph (b) of this section.

(b) If the affected equipment leak source is also subject to another subpart in 40 CFR part 61 or 40 CFR part 63, you may control emissions of the HAP listed in Table 1 to this subpart from the affected equipment leak source in compliance with the standards specified in the other applicable subpart. This means you are complying with all

applicable emissions limitations and work practice standards under the other subpart (*e.g.* , you implement leak detection and control measures to reduce HAP emissions as specified by the applicable subpart). This provision does not apply to any exemption of the affected source from the emissions limitations and work practice standards allowed by the other applicable subpart.

[71 FR 69017, Nov. 29, 2006]

§ 63.7888 How do I implement this rule at my facility using the cross-referenced requirements in other subparts?

(a) For the purposes of this subpart, when you read the term “HAP listed in Table 1 of this subpart” in a cross-referenced section under 40 CFR part 63, subpart DD—National Emission Standards for Hazardous Air Pollutants from Off-Site Waste and Recovery Operations, you should refer to Table 1 of this subpart.

(b) For the purposes of this subpart, when you read the term off-site material in a cross-referenced section under 40 CFR part 63, subpart DD—National Emission Standards for Hazardous Air Pollutants from Off-Site Waste and Recovery Operations you should substitute the term remediation material, as defined in §63.7957.

(c) For the purposes of this subpart, when you read the term regulated material in a cross-referenced section under 40 CFR part 63, subparts OO, PP, QQ, RR, TT, UU, WW, and VV you should substitute the term remediation material, as defined in §63.7957.

Process Vents

§ 63.7890 What emissions limitations and work practice standards must I meet for process vents?

(a) You must control HAP emissions from each new and existing process vent subject to §63.7885(b)(1) according to emissions limitations and work practice standards in this section that apply to your affected process vents.

(b) For your affected process vents, you must meet one of the facility-wide emission limit options specified in paragraphs (b)(1) through (4) of this section. If you have multiple affected process vent streams, you may comply with this paragraph using a combination of controlled and uncontrolled process vent streams that achieve the facility-wide emission limit that applies to you.

(1) Reduce from all affected process vents the total emissions of the HAP listed in Table 1 of this subpart to a level less than 1.4 kilograms per hour (kg/hr) and 2.8 Mg/yr (3.0 pounds per hour (lb/hr) and 3.1 tpy); or

(2) Reduce from all affected process vents the emissions of total organic compounds (TOC) (minus methane and ethane) to a level below 1.4 kg/hr and 2.8 Mg/yr (3.0 lb/hr and 3.1 tpy); or

(3) Reduce from all affected process vents the total emissions of the HAP listed in Table 1 of this subpart by 95 percent by weight or more; or

(4) Reduce from all affected process vents the emissions of TOC (minus methane and ethane) by 95 percent by weight or more.

(c) For each closed vent system and control device you use to comply with paragraph (b) of this section, you must meet the operating limit requirements and work practice standards in §63.7925(c) through (j) that apply to your closed vent system and control device.

[68 FR 58190, Oct. 8, 2003, as amended at 71 FR 69017, Nov. 29, 2006]

§ 63.7891 How do I demonstrate initial compliance with the emissions limitations and work practice standards for process vents?

(a) You must demonstrate initial compliance with the emissions limitations and work practice standards in §63.7890(b) applicable to your affected process vents by meeting the requirements in paragraphs (b) through (d) of this section.

(b) You have measured or determined using the procedures for performance tests and design evaluations in §63.7941 that emission levels from all of your affected process vents meet the facility-wide emission limits in §63.7890(b) that apply to you, as follows in paragraphs (b)(1) through (4) of this section.

(1) If you elect to meet §63.7890(b)(1), you demonstrate that the total emissions of the HAP listed in Table 1 of this subpart from all affected process vents at your facility are less than 1.4 kg/hr and 2.8 Mg/yr (3.0 lb/hr and 3.1 tpy).

(2) If you elect to meet §63.7890(b)(2), you demonstrate that emissions of TOC (minus methane and ethane) from all affected process vents at your facility are less than 1.4 kg/hr and 2.8 Mg/yr (3.0 lb/hr and 3.1 tpy).

(3) If you elect to meet §63.7890(b)(3), you demonstrate that the total emissions of the HAP listed in Table 1 of this subpart from all affected process vents are reduced by 95 percent by weight or more.

(4) If you elect to meet §63.7890(b)(4), you demonstrate that the emissions of TOC (minus methane and ethane) from all affected process vents are reduced by 95 percent by weight or more.

(c) For each closed vent system and control device you use to comply with §63.7890(b), you have met each requirement for demonstrating initial compliance with the emission limitations and work practice standards for a closed vent system and control device in §63.7926.

(d) You have submitted a notification of compliance status according to the requirements in §63.7950.

§ 63.7892 What are my inspection and monitoring requirements for process vents?

For each closed vent system and control device you use to comply with §63.7890(b), you must monitor and inspect the closed vent system and control device according to the requirements in §63.7927 that apply to you.

§ 63.7893 How do I demonstrate continuous compliance with the emissions limitations and work practice standards for process vents?

(a) You must demonstrate continuous compliance with the emissions limitations and work practice standards in §63.7890 applicable to your affected process vents by meeting the requirements in paragraphs (b) through (d) of this section.

(b) You must maintain emission levels from all of your affected process vents to meet the facilitywide emission limits in §63.7890(b) that apply to you, as specified in paragraphs (b)(1) through (4) of this section.

(1) If you elect to meet §63.7890(b)(1), you maintain the total emissions of the HAP listed in Table 1 of this subpart from all affected process vents at your facility are less than 1.4 kg/hr and 2.8 Mg/yr (3.0 lb/hr and 3.1 tpy).

(2) If you elect to meet §63.7890(b)(2), you maintain emissions of TOC (minus methane and ethane) from all affected process vents at your facility are less than 1.4 kg/hr and 2.8 Mg/yr (3.0 lb/hr and 3.1 tpy).

(3) If you elect to meet §63.7890(b)(3), you maintain the total emissions of the HAP listed in Table 1 of this subpart from all affected process vents are reduced by 95 percent by weight or more.

(4) If you elect to meet §63.7890(b)(4), you maintain that the emissions of TOC (minus methane and ethane) from all affected process vents are reduced by 95 percent by weight or more.

(c) For each closed vent system and control device you use to comply with §63.7890(b), you have met each requirement for demonstrating continuous compliance with the emission limitations and work practice standards for a closed vent system and control device in §63.7928.

(d) Keeping records to document continuous compliance with the requirements of this subpart according to the requirements in §63.7952.

[68 FR 58190, Oct. 8, 2003, as amended at 71 FR 69017, Nov. 29, 2006]

Tanks

§ 63.7895 What emissions limitations and work practice standards must I meet for tanks?

(a) You must control HAP emissions from each new and existing tank subject to §63.7886(b)(1)(i) according to emissions limitations and work practice standards in this section that apply to your affected tanks.

(b) For each affected tank, you must install and operate air pollution controls that meet the requirements in paragraphs (b)(1) through (4) of this section that apply to your tank.

(1) Unless your tank is used for a waste stabilization process, as defined in §63.7957, you must determine the maximum HAP vapor pressure (expressed in kilopascals (kPa)) of the remediation material placed in your tank using the procedures specified in §63.7944.

(2) If the maximum HAP vapor pressure of the remediation material you place in your tank is less than 76.6 kPa, then you must determine which tank level controls (*i.e.,* Tank Level 1 or Tank Level 2) apply to your tank as shown in Table 2 of this subpart, and based on your tank's design capacity (expressed in cubic meters (m^3)) and the maximum HAP vapor pressure of the remediation material you place in this tank. If your tank is required by Table 2 of this subpart to use Tank Level 1 controls, then you must meet the requirements in paragraph (c) of this section. If your tank is required by Table 2 of this subpart to use Tank Level 2 controls, then you must meet the requirements in paragraph (d) of this section

(3) If maximum HAP vapor pressure of the remediation material you place in your tank is 76.6 kPa or greater, then the tank must use one of the Tank Level 2 controls specified in paragraphs (d)(3) through (5) of this section. Use of floating roofs under paragraph (d)(1) or (2) of this section is not allowed for tanks managing these remediation materials.

(4) A tank used for a waste stabilization process, as defined in §63.7957, must use one of Tank Level 2 controls, as specified in paragraph (d) of this section, that is appropriate for your waste stabilization process.

(c) If you use Tank Level 1 controls, you must install and operate a fixed roof according to the requirements in §63.902. As an alternative to using this fixed roof, you may choose to use one of Tank Level 2 controls in paragraph (d) of this section.

(d) If you use Tank Level 2 controls, you must meet the requirements of one of the options in paragraphs (d)(1) through (5) of this section.

(1) Install and operate a fixed roof with an internal floating roof according to the requirements in §63.1063(a)(1)(i), (a)(2), and (b); or

(2) Install and operate an external floating roof according to the requirements in §63.1063(a)(1)(ii), (a)(2), and (b); or

(3) Install and operate a fixed roof vented through a closed vent system to a control device according to the requirements in §63.685(g). You must meet the emissions limitations and work practice standards in §63.7925 that apply to your closed vent system and control device; or

(4) Install and operate a pressure tank according to the requirements in §63.685(h); or

(5) Locate the tank inside a permanent total enclosure and vent emissions from the enclosure through a closed vent system to a control device that is an enclosed combustion device according to the requirements in §63.685(i). You must meet the emissions limitations and work practice standards in §63.7925 that apply to your closed vent system and control device.

(e) As provided in §63.6(g), you may request approval from the EPA to use an alternative to the work practice standards in this section that apply to your tanks. If you request for permission to use an alternative to the work practice standards, you must submit the information described in §63.6(g)(2).

§ 63.7896 How do I demonstrate initial compliance with the emissions limitations and work practice standards for tanks?

(a) You must demonstrate initial compliance with the emissions limitations and work practice standards in §63.7895 that apply to your affected tanks by meeting the requirements in paragraphs (b) through (h) of this section, as applicable to your containers.

(b) You have submitted as part of your notification of compliance status, specified in §63.7950, a signed statement that you have met the requirements in paragraphs (b)(1) and (2) of this section.

(1) You have determined the applicable tank control levels specified in §63.7895(b) for the tanks to be used for your site remediation.

(2) You have determined, according to the procedures in §63.7944, and recorded the maximum HAP vapor pressure of the remediation material placed in each affected tank subject to §63.7886(b)(1)(i) that does not use Tank Level 2 controls.

(c) You must demonstrate initial compliance of each tank determined under paragraph (b) of this section to require Tank Level 1 controls if you have submitted as part of your notification of compliance status, specified in §63.7950, a signed statement that you have met the requirements in paragraphs (c)(1) through (3) of this section.

(1) Each tank using Tank Level 1 controls is equipped with a fixed roof and closure devices according to the requirements in §63.902(b) and (c) and you have records documenting the design.

(2) You have performed an initial visual inspection of the fixed roof and closure devices for defects according to the requirements in §63.906(a) and you have records documenting the inspection results.

(3) You will operate the fixed roof and closure devices according to the requirements in §63.902.

(d) You must demonstrate initial compliance of each tank determined under paragraph (b) of this section to require Tank Level 2 controls and using a fixed roof with an internal floating roof according to §63.7895(d)(1) if you have submitted as part of your notification of compliance status, specified in §63.7950, a signed statement that you have met the requirements in paragraphs (d)(1) through (3) of this section.

(1) Each tank is equipped with an internal floating roof that meets the requirements in §63.1063(a) and you have records documenting the design.

(2) You will operate the internal floating roof according to the requirements in §63.1063(b).

(3) You have performed an initial visual inspection according to the requirements in §63.1063(d)(1) and you have a record of the inspection results.

(e) You must demonstrate initial compliance of each tank determined under paragraph (b) of this section to require Tank Level 2 controls and using an external floating roof according to §63.7895(d)(2) if you have submitted as part of your notification of compliance status, specified in §63.7950, a signed statement that you have met the requirements in paragraphs (e)(1) through (3) of this section.

(1) Each tank is equipped with an external floating roof that meets the requirements in §63.1063(a) and you have records documenting the design.

(2) You will operate the external floating roof according to the requirements in §63.1063(b).

(3) You have performed an initial seal gap measurement inspection according to the requirements in §63.1063(d)(3) and you have records of the measurement results.

(f) You must demonstrate initial compliance of each tank determined under paragraph (b) of this section to require Tank Level 2 controls and using a fixed roof vented to a control device according to §63.7895(d)(3) if you have submitted as part of your notification of compliance status, specified in §63.7950, a signed statement that you have met the requirements in paragraphs (f)(1) through (4) of this section.

(1) Each tank is equipped with a fixed roof and closure devices according to the requirements in §63.902(b) and (c) and you have records documenting the design.

(2) You have performed an initial visual inspection of fixed roof and closure devices for defects according to the requirements in §63.695(b)(3) and you have records documenting the inspection results.

(3) You will operate the fixed roof and closure devices according to the requirements in §63.685(g).

(4) You have met each applicable requirement for demonstrating initial compliance with the emission limitations and work practice standards for a closed vent system and control device in §63.7926.

(g) You must demonstrate initial compliance of each tank determined under paragraph (b) of this section to require Tank Level 2 controls and operates as a pressure tank according to §63.7895(d)(4) if you have submitted as part of your notification of compliance status, specified in §63.7950, a signed statement that you have met the requirements in paragraphs (g)(1) and (2) of this section.

(1) Each tank is designed to operate as a pressure tank according to the requirements in §63.685(h), and you have records documenting the design.

(2) You will operate the pressure tank and according to the requirements in §63.685(h).

(h) You must demonstrate initial compliance of each tank determined under paragraph (b) of this section to require Tank Level 2 controls and using a permanent total enclosure vented to an enclosed combustion device according to §63.7895(d)(5) if you have submitted as part of your notification of compliance status, specified in §63.7950, a signed statement that you have met the requirements in paragraphs (h)(1) and (2) of this section.

(1) You have submitted as part of your notification of compliance status a signed statement that you have performed the verification procedure according to the requirements in §63.685(i), and you have records of the supporting calculations and measurements.

(2) You have met each applicable requirement for demonstrating initial compliance with the emission limitations and work practice standards for a closed vent system and control device in §63.7926.

[68 FR 58190, Oct. 8, 2003, as amended at 71 FR 69017, Nov. 29, 2006]

§ 63.7897 What are my inspection and monitoring requirements for tanks?

(a) You must visually inspect each of your tanks using Tank Level 1 controls for defects at least annually according to the requirements in §63.906(a).

(b) You must inspect and monitor each of your tanks using Tank Level 2 controls according to the requirements in paragraphs (b)(1) through (5), as applicable to your tanks.

(1) If you use a fixed roof with an internal floating roof according to §63.7895(d)(1), you must visually inspect the fixed roof and internal floating roof according to the requirements in §63.1063(d)(1) and (2).

(2) If you use an external floating roof according to §63.7895(d)(2), you must visually inspect the external floating roof according to the requirements in §63.1063(d)(1) and inspect the seals according to the requirements in §63.1063(d)(2) and (3).

(3) If you use a fixed roof vented to a control device according to §63.7895(d)(3), you must meet requirements in paragraphs (b)(3)(i) and (ii) of this section.

(i) You must visually inspect the fixed roof and closure devices for defects according to the requirements in §63.695(b)(3).

(ii) You must monitor and inspect the closed vent system and control device according to the requirements in §63.7927 that apply to you.

(4) If you use a pressure tank according to §63.7895(d)(4), you must visually inspect the tank and its closure devices for defects at least annually to ensure they are operating according to the design requirements in §63.685(h).

(5) If you use a permanent total enclosure vented to an enclosed combustion device according to §63.7895(d)(5), you must meet requirements in paragraphs (b)(5)(i) and (ii) of this section.

(i) You must perform the verification procedure for the permanent total enclosure at least annually according to the requirements in §63.685(i).

(ii) You must monitor and inspect the closed vent system and control device according to the requirements in §63.7927 that apply to you.

§ 63.7898 How do I demonstrate continuous compliance with the emissions limitations and work practice standards for tanks?

(a) You must demonstrate continuous compliance with the emissions limitations and work practice standards in §63.7895 applicable to your affected tanks by meeting the requirements in paragraphs (b) through (d) of this section.

(b) You must demonstrate continuous compliance with the requirement to determine the applicable tank control level specified in §63.7895(b) for each affected tank by meeting the requirements in paragraphs (b)(1) through (3) of this section.

(1) Keeping records of the tank design capacity according to the requirements in §63.1065(a).

(2) For tanks subject to §63.7886(b)(1)(ii) and not using Tank Level 2 controls, meeting the requirements in paragraphs (b)(2)(i) and (ii) of this section.

(i) Keeping records of the maximum HAP vapor pressure determined according to the procedures in §63.7944 for the remediation material placed in each affected tank.

(ii) Performing a new determination of the maximum HAP vapor pressure whenever changes to the remediation material managed in the tank could potentially cause the maximum HAP vapor pressure to increase to a level that is

equal to or greater than the maximum HAP vapor pressure for the tank design capacity specified in Table 2. You must keep records of each determination.

(3) Keeping records to document compliance with the requirements of this subpart according to the requirements in §63.7952.

(c) You must demonstrate continuous compliance for each tank determined to require Tank Level 1 controls by meeting the requirements in paragraphs (c)(1) through (5) of this section.

(1) Operating and maintaining the fixed roof and closure devices according to the requirements in §63.902(c).

(2) Visually inspecting the fixed roof and closure devices for defects at least annually according to the requirements in §63.906(a).

(3) Repairing defects according to the requirements in §63.63.906(b).

(4) Recording the information specified in §63.907(a)(3) and (b).

(5) Keeping records to document compliance with the requirements of this subpart according to the requirements in §63.7952.

(d) You must demonstrate continuous compliance for each tank determined to require Tank Level 2 controls and using a fixed roof with an internal floating roof according to §63.7895(d)(1) by meeting the requirements in paragraphs (d)(1) through (5) of this section.

(1) Operating and maintaining the internal floating roof according to the requirements in §63.1063(b).

(2) Visually inspecting the internal floating roof according to the requirements in §63.1063(d)(1) and (2).

(3) Repairing defects according to the requirements in §63.1063(e).

(4) Recording the information specified in §63.1065(b) through (d).

(5) Keeping records to document compliance with the requirements of this subpart according to the requirements in §63.7952.

(e) You must demonstrate continuous compliance for each tank determined to require Tank Level 2 controls and using an external floating roof according to §63.7895(d)(2) by meeting the requirements in paragraphs (e)(1) through (5) of this section.

(1) Operating and maintaining the external floating roof according to the requirements in §63.1063(b).

(2) Visually inspecting the external floating roof according to the requirements in §63.1063(d)(1) and inspecting the seals according to the requirements in §63.1063(d)(2) and (3).

(3) Repairing defects according to the requirements in §63.1063(e).

(4) Recording the information specified in §63.1065(b) through (d).

(5) Keeping records to document compliance with the requirements of this subpart according to the requirements in §63.7952.

(f) You must demonstrate continuous compliance for each tank determined to require Tank Level 2 controls and using a fixed roof vented to a control device according to §63.7895(d)(3) by meeting the requirements in paragraphs (f)(1) through (6) of this section.

(1) Operating and maintaining the fixed roof and closure devices according to the requirements in §63.685(g).

(2) Visually inspecting the fixed roof and closure devices for defects at least annually according to the requirements in §63.695(b)(3)(i).

(3) Repairing defects according to the requirements in §63.695(b)(4).

(4) Recording the information specified in §63.696(e).

(5) Meeting each applicable requirement for demonstrating continuous compliance with the emission limitations and work practice standards for a closed vent system and control device in §63.7928.

(6) Keeping records to document compliance with the requirements of this subpart according to the requirements in §63.7952.

(g) You must demonstrate continuous compliance for each tank determined to require Tank Level 2 controls and operated as a pressure tank according to §63.7895(d)(4) by meeting the requirements in paragraphs (g)(1) through (3) of this section.

(1) Operating and maintaining the pressure tank and closure devices according to the requirements in §63.685(h).

(2) Visually inspecting each pressurized tank and closure devices for defects at least annually to ensure they are operating according to the design requirements in §63.685(h), and recording the results of each inspection.

(3) Keeping records to document compliance with the requirements of this subpart according to the requirements in §63.7952.

(h) You must demonstrate continuous compliance for each tank determined to require Tank Level 2 controls and using a permanent total enclosure vented to an enclosed combustion device according to §63.7895(d)(5) by meeting the requirements in paragraphs (h)(1) through (4) of this section.

(1) Performing the verification procedure for the enclosure annually according to the requirements in §63.685(i).

(2) Recording the information specified in §63.696(f).

(3) Meeting each applicable requirement for demonstrating continuous compliance with the emissions limitations and work practice standards for a closed vent system and control device in §63.7928.

(4) Keeping records to document compliance with the requirements of this subpart according to the requirements in §63.7952.

[68 FR 58190, Oct. 8, 2003, as amended at 71 FR 69017, Nov. 29, 2006]

Containers

§ 63.7900 What emissions limitations and work practice standards must I meet for containers?

(a) You must control HAP emissions from each new and existing container subject to §63.7886(b)(1)(ii) according to emissions limitations and work practice standards in this section that apply to your affected containers.

(b) For each container having a design capacity greater than 0.1 m^3 you must meet the requirements in paragraph (b)(1) or (2) of this section that apply to your container except at the times the container is used for treatment of

remediation material by a waste stabilization process, as defined in §63.7957. As an alternative for any container subject to this paragraph, you may choose to meet the requirements in paragraph (d) of this section.

(1) If the design capacity of your container is less than or equal to 0.46 m^3 , then you must use controls according to the standards for Container Level 1 controls as specified in §63.922. As an alternative, you may choose to use controls according to either of the standards for Container Level 2 controls as specified in §63.923.

(2) If the design capacity of your container is greater than 0.46 m^3 , then you must use controls according to the standards for Container Level 2 controls as specified in §63.923 except as provided for in paragraph (b)(3) of this section.

(3) As an alternative to meeting the standards in paragraph (b)(2) of this section for containers with a capacity greater than 0.46 m^3 , if you determine that either of the conditions in paragraphs (b)(3)(i) or (ii) apply to the remediation material placed in your container, then you may use controls according to the standards for Container Level 1 controls as specified in §63.922.

(i) Vapor pressure of every organic constituent in the remediation material placed in your container is less than 0.3 kPa at 20 °C; or

(ii) Total concentration of the pure organic constituents having a vapor pressure greater than 0.3 kPa at 20 °C in the remediation material placed in your container is less than 20 percent by weight.

(c) At times when a container having a design capacity greater than 0.1 m^3 is used for treatment of a remediation material by a waste stabilization process as defined in §63.7957, you must control air emissions from the container during the process whenever the remediation material in the container is exposed to the atmosphere according to the standards for Container Level 3 controls as specified in §63.924. You must meet the emissions limitations and work practice standards in §63.7925 that apply to your closed vent system and control device.

(d) As an alternative to meeting the requirements in paragraph (b) of this section, you may choose to use controls on your container according to the standards for Container Level 3 controls as specified in §63.924. You must meet the emissions limitations and work practice standards in §63.7925 that apply to your closed vent system and control device.

(e) As provided in §63.6(g), you may request approval from the EPA to use an alternative to the work practice standards in this section that apply to your containers. If you request for permission to use an alternative to the work practice standards, you must submit the information described in §63.6(g)(2).

§ 63.7901 How do I demonstrate initial compliance with the emissions limitations and work practice standards for containers?

(a) You must demonstrate initial compliance with the emissions limitations and work practice standards in §63.7990 that apply to your affected containers by meeting the requirements in paragraphs (b) through (e) of this section, as applicable to your containers.

(b) You have submitted as part of your notification of compliance status, specified in §63.7950, a signed statement that you have met the requirements in paragraphs (b)(1) and (2) of this section.

(1) You have determined the applicable container control levels specified in §63.7990 for the containers to be used for your site remediation.

(2) You have determined and recorded the maximum vapor pressure or total organic concentration for the remediation material placed in containers with a design capacity greater than 0.46 m^3 , and do not use Container Level 2 or Level 3 controls.

(c) You must demonstrate initial compliance of each container determined under paragraph (b) of this section to require Container Level 1 controls if you have submitted as part of your notification of compliance status, specified in §63.7950, a signed statement that you have met the requirements in paragraphs (c)(1) and (2) of this section.

(1) Each container using Container Level 1 controls will be one of the containers specified in §63.922(b).

(2) You will operate each container cover and closure device according to the requirements in §63.922(d).

(d) You must demonstrate initial compliance of each container determined under paragraph (b) of this section to require Container Level 2 controls if you have submitted as part of your notification of compliance status, specified in §63.7950, a signed statement that you have met the requirements in paragraphs (d)(1) through (4) of this section.

(1) Each container using Container Level 2 controls will be one of the containers specified in §63.923(b).

(2) You will transfer remediation materials into and out of each container according to the procedures in §63.923(d).

(3) You will operate and maintain the container covers and closure devices according to the requirements in §63.923(d).

(4) You have records that the container meets the applicable U.S. Department of Transportation regulations, or you have conducted an initial test of each container for no detectable organic emissions using the procedures in §63.925(a), and have records documenting the test results, or you have demonstrated within the last 12 months that each container is vapor-tight according to the procedures in §63.925(a) and have records documenting the test results.

(e) You must demonstrate initial compliance of each container determined under paragraph (b) of this section to require Container Level 3 controls if you have submitted as part of your notification of compliance status, specified in §63.7950, a signed statement that you have met the requirements in paragraphs (e)(1) and (2) of this section.

(1) For each permanent total enclosure you use to comply with §63.7900, you have performed the verification procedure according to the requirements in §63.924(c)(1), and prepare records of the supporting calculations and measurements.

(2) You have met each applicable requirement for demonstrating initial compliance with the emission limitations and work practice standards for a closed vent system and control device in §63.7926.

§ 63.7902 What are my inspection and monitoring requirements for containers?

(a) You must inspect each container using Container Level 1 or Container Level 2 controls according to the requirements in §63.926(a).

(b) If you use Container Level 3 controls, you must meet requirements in paragraphs (b)(1) and (2) of this section, as applicable to your site remediation.

(1) You must perform the verification procedure for each permanent total enclosure annually according to the requirements in §63.924(c)(1).

(2) You must monitor and inspect each closed vent system and control device according to the requirements in §63.7927 that apply to you.

§ 63.7903 How do I demonstrate continuous compliance with the emissions limitations and work practice standards for containers?

(a) You must demonstrate continuous compliance with the emissions limitations and work practice standards in §63.7990 applicable to your affected containers by meeting the requirements in paragraphs (b) through (e) of this section.

(b) You must demonstrate continuous compliance with the requirement to determine the applicable container control level specified in §63.7990(b) for each affected tank by meeting the requirements in paragraphs (b)(1) through (3) of this section.

(1) Keeping records of the quantity and design capacity for each type of container used for your site remediation and subject to §63.7886(b)(1)(ii).

(2) For containers subject to §63.7886(b)(1)(ii) with a design capacity greater than 0.46 m^3 and not using Container Level 2 or Container Level 3 controls, meeting the requirements in paragraphs (b)(2)(i) and (ii) of this section.

(i) Keeping records of the maximum vapor pressure or total organic concentration for the remediation material placed in the containers, as applicable to the conditions in §63.7900(b)(3)(i) or (ii) for which your containers qualify to use Container Level 1 controls.

(ii) Performing a new determination whenever changes to the remediation material placed in the containers could potentially cause the maximum vapor pressure or total organic concentration to increase to a level that is equal to or greater than the conditions specified in §63.7900(b)(3)(i) or (ii), as applicable to your containers. You must keep records of each determination.

(3) Keeping records to document compliance with the requirements according to the requirements in §63.7952.

(c) You must demonstrate continuous compliance for each container determined to require Container Level 1 controls by meeting the requirements in paragraphs (c)(1) through (5) of this section.

(1) Operating and maintaining covers for each container according to the requirements in §63.922(d) .

(2) Inspecting each container annually according to the requirements in §63.926(a)(2).

(3) Emptying or repairing each container according to the requirements in §63.926(a)(3).

(4) Keeping records of an inspection that includes the information in paragraphs (a)(4)(i) and (ii) of this section.

(i) Date of each inspection; and

(ii) If a defect is detected during an inspection, the location of the defect, a description of the defect, the date of detection, the corrective action taken to repair the defect, and if repair is delayed, the reason for any delay and the date completion of the repair is expected.

(5) Keeping records to document compliance with the requirements according to the requirements in §63.7952.

(d) You must demonstrate continuous compliance for each container determined to require Container Level 2 controls by meeting the requirements in paragraphs (d)(1) through (6) of this section.

(1) Transferring remediation material in and out of the container according to the requirements in §63.923(c).

(2) Operating and maintaining container covers according to the requirements in §63.923(d).

(3) Inspecting each container annually according to the requirements in §63.926(a)(2).

(4) Emptying or repairing containers according to the requirements in §63.926(a)(3).

(5) Keeping records of each inspection that include the information in paragraphs (d)(5)(i) and (ii) of this section.

(i) Date of each inspection; and

(ii) If a defect is detected during an inspection, the location of the defect, a description of the defect, the date of detection, the corrective action taken to repair the defect, and if repair is delayed, the reason for any delay and the date completion of the repair is expected.

(6) Keeping records to document compliance with the requirements of this subpart according to the requirements in §63.7952.

(e) You must demonstrate continuous compliance for each container determined to require Container Level 3 controls by meeting the requirements in paragraphs (e)(1) through (4) of this section.

(1) Performing the verification procedure for the enclosure annually according to the requirements in §63.685(i).

(2) Recording the information specified in §63.696(f).

(3) Meeting each applicable requirement for demonstrating continuous compliance with the emissions limitations and work practice standards for a closed vent system and control device in §63.7928.

(4) Keeping records to document compliance with the requirements of this subpart according to the requirements in §63.7952.

Surface Impoundments

§ 63.7905 What emissions limitations or work practice standards must I meet for surface impoundments?

(a) You must control HAP emissions from each new and existing surface impoundment subject to §63.7886(b)(1)(iii) according to emissions limitations and work practice standards in this section that apply to your affected surface impoundments.

(b) For each affected surface impoundment, you must install and operate air pollution controls that meet either of the options in paragraphs (b)(1) or (2) of this section.

(1) Install and operate a floating membrane cover according to the requirements in §63.942; or

(2) Install and operate a cover vented through a closed vent system to a control device according to the requirements in §63.943. You must meet the emissions limitations and work practice standards in §63.7925 that apply to your closed vent system and control device.

(c) As provided in §63.6(g), you may request approval from the EPA to use an alternative to the work practice standards in this section that apply to your surface impoundments. If you request for permission to use an alternative to the work practice standards, you must submit the information described in §63.6(g)(2).

§ 63.7906 How do I demonstrate initial compliance with the emissions limitations or work practice standards for surface impoundments?

(a) You must demonstrate initial compliance with the emissions limitations and work practice standards in §63.7905 that apply to your affected surface impoundments by meeting the requirements in paragraphs (b) and (c) of this section, as applicable to your surface impoundments.

(b) You must demonstrate initial compliance of each surface impoundment using a floating membrane cover according to §63.7905(b)(1) if you have submitted as part of your notification of compliance status, specified in §63.7950, a signed statement that you have met the requirements in paragraphs (b)(1) through (3) of this section.

(1) You have installed a floating membrane cover and closure devices that meet the requirements in §63.942(b), and you have records documenting the design and installation.

(2) You will operate the cover and closure devices according to the requirements in §63.942(c).

(3) You have performed an initial visual inspection of each surface impoundment and closure devices according to the requirements in §63.946(a), and you have records documenting the inspection results.

(c) You must demonstrate initial compliance of each surface impoundment using a cover vented to a control device according to §63.7905(b)(2) if you have submitted as part of your notification of compliance status, specified in §63.7950, a signed statement that you have met the requirements in paragraphs (c)(1) through (4) of this section.

(1) You have installed a cover and closure devices that meet the requirements in §63.943(b), and have records documenting the design and installation.

(2) You will operate the cover and closure devices according to the requirements in §63.943(c).

(3) You have performed an initial visual inspection of each cover and closure devices according to the requirements in §63.946(b), and have records documenting the inspection results.

(4) You have met each applicable requirement for demonstrating initial compliance with the emission limitations and work practice standards for a closed vent system and control device in §63.7926.

§ 63.7907 What are my inspection and monitoring requirements for surface impoundments?

(a) If you use a floating membrane cover according to §63.7905(b)(1), you must visually inspect the floating membrane cover and its closure devices at least annually according to the requirements in §63.946(a).

(b) If you use a cover vented to a control device according to §63.7905(b)(2), you must meet requirements in paragraphs (b)(1) and (2) of this section.

(1) You must visually inspect the cover and its closure devices for defects according to the requirements in §63.946(b).

(2) You must monitor and inspect the closed vent system and control device according to the requirements in §63.7927 that apply to you.

§ 63.7908 How do I demonstrate continuous compliance with the emissions limitations and work practice standards for surface impoundments?

(a) You must demonstrate continuous compliance with the emissions limitations and work practice standards in §63.7905 applicable to your affected surface impoundments by meeting the requirements in paragraphs (b) and (c) of this section as applicable to your surface impoundments.

(b) You must demonstrate continuous compliance for each surface impoundment using a floating membrane cover according to §63.7905(b)(1) by meeting the requirements in paragraphs (b)(1) through (5) of this section.

(1) Operating and maintaining the floating membrane cover and closure devices according to the requirements in §63.942(c).

(2) Visually inspecting the floating membrane cover and closure devices for defects at least annually according to the requirements in §63.946(a).

(3) Repairing defects according to the requirements in §63.946(c).

(4) Recording the information specified in §63.947(a)(2) and (a)(3).

(5) Keeping records to document compliance with the requirements according to the requirements in §63.7952.

(c) You must demonstrate continuous compliance for each surface impoundment using a cover vented to a control device according to §63.7905(b)(2) by meeting the requirements in paragraphs (c)(1) through (6) of this section.

(1) Operating and maintaining the cover and its closure devices according to the requirements in §63.943(c).

(2) Visually inspecting the cover and its closure devices for defects at least annually according to the requirements in §63.946(b).

(3) Repairing defects according to the requirements in §63.946(c).

(4) Recording the information specified in §63.947(a)(2) and (a)(3).

(5) Meeting each applicable requirement for demonstrating continuous compliance with the emission limitations and work practice standards for a closed vent system and control device in §63.7928.

(6) Keeping records to document compliance with the requirements according to the requirements in §63.7952.

Separators

§ 63.7910 What emissions limitations and work practice standards must I meet for separators?

(a) You must control HAP emissions from each new and existing oil-water separator and organic-water separator subject to §63.7886(b)(1)(iv) according to emissions limitations and work practice standards in this section that apply to your affected separators.

(b) For each affected separator, you must install and operate air pollution controls that meet one of the options in paragraphs (b)(1) through (3) of this section.

(1) Install and operate a floating roof according to the requirements in §63.1043. For portions of the separator where it is infeasible to install and operate a floating roof, such as over a weir mechanism, you must comply with the requirements specified in paragraph (b)(2) of this section.

(2) Install and operate a fixed roof vented through a closed vent system to a control device according to the requirements in §63.1044. You must meet the emissions limitations and work practice standards in §63.7925 that apply to your closed vent system and control device.

(3) Install and operate a pressurized separator according to the requirements in §63.1045.

(c) As provided in §63.6(g), you may request approval from the EPA to use an alternative to the work practice standards in this section that apply to your separators. If you request for permission to use an alternative to the work practice standards, you must submit the information described in §63.6(g)(2).

§ 63.7911 How do I demonstrate initial compliance with the emissions limitations and work practice standards for separators?

(a) You must demonstrate initial compliance with the emissions limitations and work practice standards in §63.7910 that apply to your affected separators by meeting the requirements in paragraphs (b) through (d) of this section, as applicable to your separators.

(b) You must demonstrate initial compliance of each separator using a floating roof according to §63.7910(b)(1) if you have submitted as part of your notification of compliance status, specified in §63.7950, a signed statement that you have met the requirements in paragraphs (b)(1) through (4) of this section.

(1) You have installed a floating roof and closure devices that meet the requirements in §63.1043(b), and you have records documenting the design and installation.

(2) You will operate the floating roof and closure devices according to the requirements in §63.1043(c).

(3) You have performed an initial seal gap measurement inspection using the procedures in §63.1046(b), and you have records documenting the measurement results.

(4) You have performed an initial visual inspection of the floating roof and closure devices for defects according to the requirements in §63.1047(b)(2), and you have records documenting the inspection results.

(5) For any portions of the separator using a fixed roof vented to a control device according to §63.7910(b)(1), you have met the requirements in paragraphs (c)(1) through (4) of this section.

(c) You must demonstrate initial compliance of each separator using a fixed roof vented to a control device according to §63.7910(b)(2) if you have submitted as part of your notification of compliance status, specified in §63.7950, a signed statement that you have met the requirements in paragraphs (c)(1) through (4) of this section.

(1) You have installed a fixed roof and closure devices that meet the requirements in §63.1042(b), and you have records documenting the design and installation.

(2) You will operate the fixed roof and its closure devices according to the requirements in §63.1042(c).

(3) You have performed an initial visual inspection of the fixed roof and closure devices for defects according to the requirements in §63.1047(a).

(4) You have met each applicable requirement for demonstrating initial compliance with the emission limitations and work practice standards for a closed vent system and control device in §63.7926.

(d) You must demonstrate initial compliance of each pressurized separator that operates as a closed system according to §63.7910(b)(3) if you have submitted as part of your notification of compliance status, specified in §63.7950, a signed statement that you have met the requirements in paragraphs (d)(1) and (2) of this section.

(1) You have installed a pressurized separator that operates as a closed system according to the requirements in §63.1045(b)(1) and (b)(2), and you have records of the design and installation.

(2) You will operate the pressurized separator as a closed system according to the requirements in §63.1045(b)(3).

§ 63.7912 What are my inspection and monitoring requirements for separators?

(a) If you use a floating roof according to §63.7910(b)(1), you must meet requirements in paragraphs (a)(1) and (2) of this section.

(1) Measure the seal gaps at least annually according to the requirements in §63.1047(b)(1).

(2) Visually inspect the floating roof at least annually according to the requirements in §63.1047(b)(2).

(b) If you use a cover vented to a control device according to §63.7910(b)(1) or (2), you must meet requirements in paragraphs (b)(1) and (2) of this section.

(1) You must visually inspect the cover and its closure devices for defects according to the requirements in §63.1047(c).

(2) You must monitor and inspect the closed vent system and control device according to the requirements in §63.7927 that apply to you.

(c) If you use a pressurized separator that operates as a closed system according to §63.7910(b)(3), you must visually inspect each pressurized separator and closure devices for defects at least annually to ensure they are operating according to the design requirements in §63.1045(b).

§ 63.7913 How do I demonstrate continuous compliance with the emissions limitations and work practice standards for separators?

(a) You must demonstrate continuous compliance with the emissions limitations and work practice standards in §63.7910 applicable to your affected separators by meeting the requirements in paragraphs (b) through (d) of this section as applicable to your surface impoundments.

(b) You must demonstrate continuous compliance for each separator using a floating roof according to §63.7910(b)(1) by meeting the requirements in paragraphs (b)(1) through (6) of this section.

(1) Operating and maintaining the floating roof according to the requirements in §63.1043(b).

(2) Performing seal gap measurement inspections at least annually according to the requirements in §63.1047(b)(1).

(3) Visually inspecting the floating roof at least annually according to the requirements in §63.1047(b)(2).

(4) Repairing defects according to the requirements in §63.1047(d).

(5) Recording the information specified in §63.1048(a) and (b).

(6) Keeping records to document compliance with the requirements according to the requirements in §63.7952.

(c) You must demonstrate continuous compliance for each separator using a fixed roof vented through a closed vent system to a control device according to §63.7910(b)(2) by meeting the requirements in paragraphs (c)(1) through (6) of this section.

(1) Operating and maintaining the fixed roof and its closure devices according to the requirements in §63.1042.

(2) Performing visual inspections of the fixed roof and its closure devices for defects at least annually according to the requirements in §63.1047(a).

(3) Repairing defects according to the requirements in §63.1047(d).

(4) Recording the information specified in §63.1048(a).

(5) Meeting each applicable requirement for demonstrating continuous compliance with the emission limitations and work practice standards for a closed vent system and control device in §63.7928.

(6) Keeping records to document compliance with the requirements of this subpart according to the requirements in §63.7952.

(d) You must demonstrate continuous compliance for each pressurized separator operated as a closed system according to §63.7910(b)(3) by meeting the requirements in paragraphs (d)(1) and (2) of this section.

(1) Operating the pressurized separator at all times according to the requirements in §63.1045.

(2) Visually inspecting each pressurized tank and closure devices for defects at least annually to ensure they are operating according to the design requirements in §63.1045(b), and recording the results of each inspection.

[68 FR 58190, Oct. 8, 2003, as amended at 71 FR 69017, Nov. 29, 2006]

Transfer Systems

§ 63.7915 What emissions limitations and work practice standards must I meet for transfer systems?

(a) You must control HAP emissions from each new and existing transfer system subject to §63.7886(b)(1)(v) according to emissions limitations and work practice standards in this section that apply to your affected transfer systems.

(b) For each affected transfer system that is an individual drain system as defined in §63.7957, you must install and operate controls according to the requirements in §63.962.

(c) For each affected transfer system that is not an individual drain system as defined in §63.7957, you must use one of the transfer systems specified in paragraphs (c)(1) through (3) of this section.

(1) A transfer system that uses covers according to the requirements in §63.689(d).

(2) A transfer system that consists of continuous hard piping. All joints or seams between the pipe sections must be permanently or semi-permanently sealed (*e.g.* , a welded joint between two sections of metal pipe or a bolted and gasketed flange).

(3) A transfer system that is enclosed and vented through a closed vent system to a control device according to the requirements specified in paragraphs (c)(3)(i) and (ii) of this section.

(i) The transfer system is designed and operated such that an internal pressure in the vapor headspace in the enclosure is maintained at a level less than atmospheric pressure when the control device is operating, and

(ii) The closed vent system and control device are designed and operated to meet the emissions limitations and work practice standards in §63.7925 that apply to your closed vent system and control device.

(d) As provided in §63.6(g), you may request approval from the EPA to use an alternative to the work practice standards in this section that apply to your transfer systems. If you request for permission to use an alternative to the work practice standards, you must submit the information described in §63.6(g)(2).

[68 FR 58190, Oct. 8, 2003, as amended at 71 FR 69018, Nov. 29, 2006]

§ 63.7916 How do I demonstrate initial compliance with the emissions limitations and work practice standards for transfer systems?

(a) You must demonstrate initial compliance with the emissions limitations and work practice standards in §63.7915 that apply to your affected transfer systems by meeting the requirements in paragraphs (b) through (e) of this section, as applicable to your transfer systems.

(b) You must demonstrate initial compliance of each individual drain system using controls according to §63.7915(b) if you have submitted as part of your notification of compliance status, specified in §63.7950, a signed statement that you have met the requirements in paragraphs (b)(1) through (3) of this section.

(1) You have installed air emission controls for each individual drain system and junction box according to the requirements in §63.962(a) and (b), and you have records documenting the installation and design.

(2) You will operate the air emission controls according to the requirements in §63.962(b)(5).

(3) You have performed an initial visual inspection of each individual drain system according to the requirements in §63.964(a), and you have records documenting the inspection results.

(c) You must demonstrate initial compliance of each transfer system using covers according to §63.7915(c)(1) if you have submitted as part of your notification of compliance status, specified in §63.7950, a signed statement that you have met the requirements in paragraphs (c)(1) through (3) of this section.

(1) Each transfer system is equipped with covers and closure devices according to the requirements in §63.689(d)(1) through (4), and you have records documenting the design and installation.

(2) You have performed an initial inspection of each cover and its closure devices for defects according to the requirements in §63.695(d)(1) through (5), and you have records documenting the inspection results.

(3) You will operate each cover and its closure devices according to the requirements in §63.689(5).

(d) You must demonstrate initial compliance of each transfer system that consists of hard piping according to §63.7915(c)(2) if you have submitted as part of your notification of compliance status, specified in §63.7950, a signed statement that you have met the requirements in paragraphs (d)(1) and (2) of this section.

(1) You have installed a transfer system that consists entirely of hard piping and meets the requirements in §63.7915(c)(2), and you have records documenting the design and installation.

(2) You have performed an initial inspection of the entire transfer system to verify that all joints or seams between the pipe sections are permanently or semi-permanently sealed (*e.g.,* a welded joint between two sections of metal pipe or a bolted and gasketed flange), and you have records documenting the inspection results.

(e) You must demonstrate initial compliance of each transfer system that is enclosed and vented to a control device according to §63.7915(e)(3) if you have submitted as part of your notification of compliance status, specified in §63.7950, a signed statement that you have met the requirements in paragraphs (e)(1) and (2) of this section.

(1) You have installed a transfer system that is designed and operated such that an internal pressure in the vapor headspace in the enclosure is maintained at a level less than atmospheric pressure when the control device is operating, and you have records documenting the design and installation.

(2) You have met each applicable requirement for demonstrating initial compliance with the emission limitations and work practice standards for a closed vent system and control device in §63.7926.

§ 63.7917 What are my inspection and monitoring requirements for transfer systems?

(a) If you operate an individual drain system as a transfer system according to §63.7915(b), you must visually inspect each individual drain system at least annually according to the requirements in §63.964(a).

(b) If you operate a transfer system using covers according to §63.7915(c)(1), you must inspect each cover and its closure devices for defects according to the requirements in §63.695(d)(1) through (5).

(c) If you operate a transfer system consisting of hard piping according to §63.7915(c)(2), you must annually inspect the unburied portion of pipeline and all joints for leaks and other defects. In the event that a defect is detected, you must repair the leak or defect according to the requirements of paragraph (e) of this section.

(d) If you operate a transfer system that is enclosed and vented to a control device according to §63.7915(c)(3), you must meet requirements in paragraphs (d)(1) and (2) of this section.

(1) You must annually inspect all enclosure components (e.g., enclosure sections, closure devices, fans) for defects that would prevent an internal pressure in the vapor headspace in the enclosure from continuously being maintained at a level less than atmospheric pressure when the control device is operating. In the event that a defect is detected, you must repair the defect according to the requirements of paragraph (e) of this section.

(2) You must monitor and inspect the closed vent system and control device according to the requirements in §63.7927 that apply to you.

(e) If you are subject to paragraph (c) or (d) of this section, you must repair all detected defects as specified in paragraphs (e)(1) through (3) of this section.

(1) You must make first efforts at repair of the defect no later than 5 calendar days after detection and repair shall be completed as soon as possible but no later than 45 calendar days after detection except as provided in paragraph (e)(2) of this section.

(2) Repair of a defect may be delayed beyond 45 calendar days if you determine that repair of the defect requires emptying or temporary removal from service of the transfer system and no alternative transfer system is available at the site to accept the material normally handled by the system. In this case, you must repair the defect the next time the process or unit that is generating the material handled by the transfer system stops operation. Repair of the defect must be completed before the process or unit resumes operation.

(3) You must maintain a record of the defect repair according to the requirements specified in §63.7952.

[68 FR 58190, Oct. 8, 2003, as amended at 71 FR 69018, Nov. 29, 2006]

§ 63.7918 How do I demonstrate continuous compliance with the emissions limitations and work practice standards for transfer systems?

(a) You must demonstrate continuous compliance with the emissions limitations and work practice standards in §63.7915 applicable to your affected transfer system by meeting the requirements in paragraphs (b) through (e) of this section as applicable to your transfer systems.

(b) You must demonstrate continuous compliance for each individual drain system using controls according to §63.7915(b) by meeting the requirements in paragraphs (b)(1) through (5) of this section.

(1) Operating and maintaining the air emission controls for individual drain systems according to the requirements in §63.962.

(2) Visually inspecting each individual drain system at least annually according to the requirements in §63.964(a).

(3) Repairing defects according to the requirements in §63.964(b).

(4) Recording the information specified in §63.965(a).

(5) Keeping records to document compliance with the requirements of this subpart according to the requirements in §63.7952.

(c) You must demonstrate continuous compliance for each transfer system using covers according to §63.7915(c)(1) by meeting the requirements in paragraphs (c)(1) through (4) of this section.

(1) Operating and maintaining each cover and its closure devices according to the requirements in §63.689(d)(1) through (5).

(2) Performing inspections of each cover and its closure devices for defects at least annually according to the requirements in §63.695(d)(1) through (5).

(3) Repairing defects according to the requirements in §63.695(5)

(4) Keeping records to document compliance with the requirements of this subpart according to the requirements in §63.7952.

(d) You must demonstrate continuous compliance for each transfer system that consists of hard piping according to §63.7915(c)(2) by meeting the requirements in paragraphs (d)(1) through (4) of this section.

(1) Operating and maintaining the pipeline to ensure that all joints or seams between the pipe sections remain permanently or semi-permanently sealed (*e.g.* , a welded joint between two sections of metal pipe or a bolted and gasketed flange).

(2) Inspecting the pipeline for defects at least annually according to the requirements in §63.7917(c).

(3) Repairing defects according to the requirements in §63.7917(e).

(4) Keeping records to document compliance with the requirements of this subpart according to the requirements in §63.7952.

(e) You must demonstrate continuous compliance for each transfer system that is enclosed and vented to a control device according to §63.7915(c)(3) by meeting the requirements in paragraphs (e)(1) through (5) of this section.

(1) Operating and maintaining the enclosure to ensure that the internal pressure in the vapor headspace in the enclosure is maintained continuously at a level less than atmospheric pressure when the control device is operating.

(2) Inspecting the enclosure and its closure devices for defects at least annually according to the requirements in §63.7918(d).

(3) Repairing defects according to the requirements in §63.7918(e).

(4) Meeting each applicable requirement for demonstrating continuous compliance with the emission limitations and work practice standards for a closed vent system and control device in §63.7928.

(5) Keeping records to document compliance with the requirements according to the requirements in §63.7952.

[68 FR 58190, Oct. 8, 2003, as amended at 71 FR 69018, Nov. 29, 2006]

Equipment Leaks

§ 63.7920 What emissions limitations and work practice standards must I meet for equipment leaks?

(a) You must control HAP emissions from each new and existing equipment subject to §63.7887 according to emissions limitations and work practice standards in this section that apply to your affected equipment.

(b) For your affected equipment, you must meet the requirements in either paragraph (b)(1) or (2) of this section.

(1) Control equipment leaks according to all applicable requirements under 40 CFR part 63, subpart TT—National Emission Standards for Equipment Leaks—Control Level 1; or

(2) Control equipment leaks according to all applicable requirements under 40 CFR part 63, subpart UU—National Emission Standards for Equipment Leaks—Control Level 2.

(c) If you use a closed vent system and control device to comply with this section, as an alternative to meeting the standards in §63.1015 or §63.1034 for closed vent systems and control devices, you may elect to meet the requirements in §§63.7925 through 63.7928 that apply to your closed vent system and control device.

(d) As provided in §63.6(g), you may request approval from the EPA to use an alternative to the work practice standards in this section that apply to your equipment. If you request for permission to use an alternative to the work practice standards, you must submit the information described in §63.6(g)(2).

§ 63.7921 How do I demonstrate initial compliance with the emissions limitations and work practice standards for equipment leaks?

(a) You must demonstrate initial compliance with the emissions limitations and work practice standards in §63.7920 that apply to your affected equipment by meeting the requirements in paragraphs (b) and (c) of this section, as applicable to your affected sources.

(b) If you control equipment leaks according to the requirements under §63.7920(b)(1), you must demonstrate initial compliance if you have met the requirements in paragraphs (b)(1) and (2) of this section.

(1) You include the information required in §63.1018(a)(1) in your notification of compliance status report.

(2) You have submitted as part of your notification of compliance status a signed statement that:

(i) You will meet the requirements in §§63.1002 through 63.1016 that apply to your affected equipment.

(ii) You have identified the equipment subject to control according to the requirements in §63.1003, including equipment designated as unsafe to monitor, and have records supporting the determinations with a written plan for monitoring the equipment according to the requirements in §63.1003(c)(4).

(c) If you control equipment leaks according to the requirements under §63.7920(b)(2), you must demonstrate initial compliance if you have met the requirements in paragraphs (c)(1) and (2) of this section.

(1) You have included the information required in §63.1039(a) in your notification of compliance status report.

(2) You have submitted as part of your notification of compliance status a signed statement that:

(i) You will meet the requirements in §§63.1021 through 63.1037 that apply to your affected equipment.

(ii) You have identified the equipment subject to control according to the requirements in §63.1022, including equipment designated as unsafe to monitor, and have records supporting the determinations with a written plan for monitoring the equipment according to the requirements in §63.1022(c)(4).

§ 63.7922 How do I demonstrate continuous compliance with the work practice standards for equipment leaks?

(a) You must demonstrate continuous compliance with the emissions limitations and work practice standards in §63.7920 applicable to your affected equipment by meeting the requirements in paragraphs (b) through (d) of this section that apply to you.

(b) If you control equipment leaks according to the requirements under §63.7920(b)(1), you must demonstrate continuous compliance by inspecting, monitoring, repairing, and maintaining records according to the requirements in §§63.1002 through 63.1018 that apply to your affected equipment.

(c) If you control equipment leaks according to the requirements under §63.7920(b)(2), you must demonstrate continuous compliance by inspecting, monitoring, repairing, and maintaining records according to the requirements in §§63.1021 through 63.1039 that apply to your affected equipment.

(d) You must keep records to demonstrate compliance with the requirements according to the requirements in §63.7952.

Closed Vent Systems and Control Devices

§ 63.7925 What emissions limitations and work practice standards must I meet for closed vent systems and control devices?

(a) For each closed-vent system and control device you use to comply with requirements in §§63.7890 through 63.7922, as applicable to your affected sources, you must meet the emissions limitations and work practice standards in this section.

(b) Whenever gases or vapors containing HAP are vented through the closed-vent system to the control device, the control device must be operating except at those times listed in either paragraph (b)(1) or (2) of this section.

(1) The control device may be bypassed for the purpose of performing planned routine maintenance of the closed-vent system or control device in situations when the routine maintenance cannot be performed during periods that the emission point vented to the control device is shutdown. On an annual basis, the total time that the closed-vent system or control device is bypassed to perform routine maintenance must not exceed 240 hours per each calendar year.

(2) The control device may be bypassed for the purpose of correcting a malfunction of the closed-vent system or control device. You must perform the adjustments or repairs necessary to correct the malfunction as soon as practicable after the malfunction is detected.

(c) For each closed vent system, you must meet the work practice standards in §63.693(c).

(d) For each control device other than a flare or a control device used to comply with the facility-wide process vent emission limits in §63.7890(b), you must control HAP emissions to meet either of the emissions limits in paragraphs (d)(1) or (2) of this section except as provided for in paragraph (f) of this section.

(1) Reduce emissions of total HAP listed in Table 1 of this subpart or TOC (minus methane and ethane) from each control device by 95 percent by weight; or

(2) Limit the concentration of total HAP listed in Table 1 of this subpart or TOC (minus methane and ethane) from each combustion control device (a thermal incinerator, catalytic incinerator, boiler, or process heater) to 20 ppmv or less on a dry basis corrected to 3 percent oxygen.

(e) If you use a flare for your control device, then you must meet the requirements for flares in §63.11(b).

(f) If you use a process heater or boiler for your control device, then as alternative to meeting the emissions limits in paragraph (d) of this section you may choose to comply with one of the work practice standards in paragraphs (f)(1) through (3) of this section.

(1) Introduce the vent stream into the flame zone of the boiler or process heater and maintain the conditions in the combustion chamber at a residence time of 0.5 seconds or longer and at a temperature of 760 °C or higher; or

(2) Introduce the vent stream with the fuel that provides the predominate heat input to the boiler or process heater (*i.e.,* the primary fuel); or

(3) Introduce the vent stream to a boiler or process heater for which you either have been issued a final permit under 40 CFR part 270 and complies with the requirements of 40 CFR part 266, subpart H—Hazardous Waste Burned in Boilers and Industrial Furnaces; or has certified compliance with the interim status requirements of 40 CFR part 266, subpart H.

(g) For each control device other than a flare, you must meet each operating limit in paragraphs (g)(1) through (6) of this section that applies to your control device.

(1) If you use a regenerable carbon adsorption system, you must:

(i) Maintain the hourly average total regeneration stream mass flow during the adsorption bed regeneration cycle greater than or equal to the stream mass flow established in the design evaluation or performance test.

(ii) Maintain the hourly average temperature of the adsorption bed during regeneration (except during the cooling cycle) greater than or equal to the temperature established during the design evaluation or performance test.

(iii) Maintain the hourly average temperature of the adsorption bed after regeneration (and within 15 minutes after completing any cooling cycle) less than or equal to the temperature established during the design evaluation.

(iv) Maintain the frequency of regeneration greater than or equal to the frequency established during the design evaluation.

(2) If you use a nonregenerable carbon adsorption system, you must maintain the hourly average temperature of the adsorption bed less than or equal to the temperature established during the design evaluation or performance test.

(3) If you use a condenser, you must maintain the daily average condenser exit temperature less than or equal to the temperature established during the design evaluation or performance test.

(4) If you use a thermal incinerator, you must maintain the daily average firebox temperature greater than or equal to the temperature established in the design evaluation or during the performance test.

(5) If you use a catalytic incinerator, you must maintain the daily average temperature difference across the catalyst bed greater than or equal to the minimum temperature difference established during the performance test or design evaluation.

(6) If you use a boiler or process heater to comply with an emission limit in paragraph (d) of this section, you must maintain the daily average firebox temperature within the operating level established during the design evaluation or performance test.

(h) If you use a carbon adsorption system as your control, you must meet each work practice standard in paragraphs (h)(1) through (3) of this section that applies to your control device.

(1) If you use a regenerable carbon adsorption system, you must:

(i) Replace the existing adsorbent in each segment of the bed with an adsorbent that meets the replacement specifications established during the design evaluation before the age of the adsorbent exceeds the maximum allowable age established during the design evaluation.

(ii) Follow the disposal requirements for spent carbon in §63.693(d)(4).

(2) If you use a nonregenerable carbon adsorption system, you must:

(i) Replace the existing adsorbent in each segment of the bed with an adsorbent that meets the replacement specifications established during the design evaluation before the age of the adsorbent exceeds the maximum allowable age established during the design evaluation.

(ii) Meet the disposal requirements for spent carbon in §63.693(d)(4)(ii).

(3) If you use a nonregenerative carbon adsorption system, you may choose to comply with the requirements in paragraphs (h)(3)(i) and (ii) of this section as an alternative to the requirements in paragraph (h)(2) of this section. You must:

(i) Immediately replace the carbon canister or carbon in the control device when the monitoring device indicates breakthrough has occurred according to the requirements in §63.693(d)(4)(iii)(A), or replace the carbon canister or carbon in the control device at regular intervals according to the requirements in §63.693(d)(4)(iii)(B).

(ii) Follow the disposal requirements for spent carbon in §63.693(d)(4)(ii).

(i) If you use a catalytic incinerator, you must replace the existing catalyst bed with a bed that meets the replacement specifications before the age of the bed exceeds the maximum allowable age established in the design evaluation or during the performance test.

(j) As provided in §63.6(g), you may request approval from the EPA to use an alternative to the work practice standards in this section that apply to your closed vent systems and control devices. If you request for permission to use an alternative to the work practice standards, you must submit the information described in §63.6(g)(2).

§ 63.7926 How do I demonstrate initial compliance with the emission limitations and work practice standards for closed vent systems and control devices?

(a) You must demonstrate initial compliance with the emissions limitations and work practice standards in this subpart applicable to your closed vent system and control device by meeting the requirements in paragraphs (b) through (h) of this section that apply to your closed vent system and control device.

(b) You must demonstrate initial compliance with the closed vent system work practice standards in §63.7925(c) if you have submitted as part of your notification of compliance status, specified in §63.7950, a signed statement that you have met the requirements in paragraphs (b)(1) and (2) of this section.

(1) You have installed a closed vent system that meets the requirements in §63.695(c)(1) and (2), and you have records documenting the equipment design and installation.

(2) You have performed the initial inspection of the closed vent system according to the requirements in §63.695(c)(1)(i) or (ii), and you have records documenting the inspection results.

(c) You must demonstrate initial compliance of each control device subject to the emissions limits in §63.7925(d) with the applicable emissions limit in §63.7925(d) if you have submitted as part of your notification of compliance status, specified in §63.7950, a signed statement that you have met the requirements in paragraphs (c)(1) and (2) of this section that apply to you.

(1) For the emissions limit in §63.7925(d)(1), the emissions of total HAP listed in Table 1 of this subpart or TOC (minus methane and ethane) from the control device, measured or determined according to the procedures for performance tests and design evaluations in §63.7941, are reduced by at least 95 percent by weight.

(2) For the emissions limit in §63.7925(d)(2), the concentration of total HAP listed in Table 1 of this subpart or TOC (minus methane and ethane) from the combustion control device, measured by a performance test or determined by

a design evaluation according to the procedures in §63.7941, do not exceed 20 ppmv on a dry basis corrected to 3 percent oxygen.

(d) You must demonstrate initial compliance of each control device subject to operating limits in §63.7925(g) with the applicable limits if you have submitted as part of your notification of compliance status, specified in §63.7950, a signed statement that you have met the requirements in paragraphs (d)(1) and (2) of this section.

(1) You have established an appropriate operating limit(s) for each of the operating parameter applicable to your control device as specified in §63.7925(g)(1) through (6).

(2) You have a record of the applicable operating parameter data during the performance test or design evaluation during which the emissions met the applicable limit.

(e) You must demonstrate initial compliance with the spent carbon replacement and disposal work practice standards for carbon adsorption systems in §63.7925(h) if you have submitted as part of your notification of compliance status, specified in §63.7950, a signed statement that you will comply with each work practice standard that applies to your carbon adsorption system.

(f) You must demonstrate initial compliance with the catalyst replacement work practice standards for catalytic incinerators in §63.7925(i) if you have submitted as part of your notification of compliance status, specified in §63.7950, a signed statement that you will comply with the specified work practice standard.

(g) You must demonstrate initial compliance of each flare with the work practice standards in §63.7925(e) if you have submitted as part of your notification of compliance status, specified in §63.7950, a signed statement that you have met the requirements in paragraphs (g)(1) through (3) of this section.

(1) Each flare meets the requirements in §63.11(b).

(2) You have performed a visible emissions test, determined the net heating value of gas being combusted, and determined the flare exit velocity as required in §63.693(h)(2).

(3) You will operate each flare according to the requirements in §63.11(b).

(h) You must demonstrate initial compliance of each boiler or process heater with the work practice standards in §63.7925(f) if you have submitted as part of your notification of compliance status, specified in §63.7950, a signed statement that you have met the requirements in paragraphs (h)(1) through (3) of this section.

(1) For the work practice standards in §63.7925(f)(1), you have records documenting that the boiler or process heater is designed to operate at a residence time of 0.5 seconds or greater and maintain the combustion zone temperature at 760 °C or greater.

(2) For the work practice standard in §63.7925(f)(2), you have records documenting that the vent stream is introduced with the fuel according to the requirements in §63.693(g)(1)(iv), or that the vent stream is introduced to a boiler or process heater that meets the requirements in §63.693(g)(1)(v).

(3) For the work practice standard in §63.7925(f)(3), you have records documenting you either have been issued a final permit under 40 CFR part 270 and your boiler or process heater complies with the requirements of 40 CFR part 266, subpart H—Hazardous Waste Burned in Boilers and Industrial Furnaces; or has been certified in compliance with the interim status requirements of 40 CFR part 266, subpart H.

§ 63.7927 What are my inspection and monitoring requirements for closed vent systems and control devices?

(a) You must comply with the requirements in paragraphs (a)(1) and (2) of this section for each closed vent system.

(1) You must monitor and inspect each closed vent system according to the requirements in either paragraph (a)(1)(i) or (ii) of this section.

(i) You must monitor, inspect, and repair defects according to the requirements in §63.695(c)(1)(ii) through (c)(3); or

(ii) You must monitor and inspect the closed vent system according to the requirements in §63.172(f) through (j) and record the information in §63.181.

(2) If your closed vent system includes a bypass device, you must meet the requirements in either paragraph (a)(2)(i) or (ii) of this section.

(i) Use a flow indicator to determine if the presence of flow according to the requirements in §63.693(c)(2)(i); or

(ii) Use a seal or locking device and make monthly inspections as required by §63.693(c)(2)(ii).

(b) If you use a regenerable carbon adsorption system, you must meet the requirements in paragraphs (b)(1) through (3) of this section.

(1) Use a continuous parameter monitoring system (CPMS) to measure and record the hourly average total regeneration stream mass flow during each carbon adsorption cycle.

(2) Use a CPMS to measure and record the hourly average temperature of the adsorption bed during regeneration (except during the cooling cycle).

(3) Use a CPMS to measure and record the hourly average temperature of the adsorption bed after regeneration (and within 15 minutes after completing any cooling cycle).

(c) If you use a nonregenerable carbon adsorption system, you must use a CPMS to measure and record the hourly average temperature of the adsorption bed or you must monitor the concentration of organic compounds in the exhaust vent stream according to the requirements in §63.693(d)(4)(iii)(A).

(d) If you use a condenser, you must use a CPMS to measure and record the hourly average condenser exit temperature and determine and record the daily average condenser exit temperature.

(e) If you use a thermal incinerator, you must use a CPMS to measure and record the hourly average firebox temperature and determine and record the daily average firebox temperature.

(f) If you use a catalytic incinerator, you must use a CPMS with two temperature sensors to measure and record the hourly average temperature at the inlet of the catalyst bed, the hourly average temperature at the outlet of the catalyst bed, the hourly average temperature difference across the catalyst bed, and to determine and record the daily average temperature difference across the catalyst bed.

(g) If you use a boiler or process heater to meet an emission limitation, you must use a CPMS to measure and record the hourly average firebox temperature and determine and record the daily average firebox temperature.

(h) If you use a flare, you must monitor the operation of the flare using a heat sensing monitoring device according to the requirements in §63.693(h)(3).

(i) If you introduce the vent stream into the flame zone of a boiler or process heater according to the requirements in §63.7925(f)(1), you must use a CPMS to measure and record the combustion zone temperature.

[68 FR 58190, Oct. 8, 2003, as amended at 71 FR 69018, Nov. 29, 2006]

§ 63.7928 How do I demonstrate continuous compliance with the emissions limitations and work practice standards for closed vent systems

and control devices?

(a) You must demonstrate continuous compliance with the emissions limitations and work practice standards in this subpart applicable to your closed vent system and control device by meeting the requirements in paragraphs (b) through (j) of this section as applicable to your closed vent system and control device.

(b) You must demonstrate continuous compliance with the closed vent system work practice standards in §63.7925(c) by meeting the requirements in paragraphs (b)(1) through (7) of this section.

(1) For a closed vent system designed to operate with no detectable organic emissions, visually inspecting the closed vent system at least annually, monitoring after a repair or replacement using the procedures in §63.694(k), and monitoring at least annually according to the requirements in §63.695(c)(1)(ii).

(2) For a closed vent system designed to operate below atmospheric pressure, visually inspecting the closed vent system at least annually according to the requirements in §63.695(c)(2)(ii).

(3) Repairing defects according to the requirements in §63.695(c)(3).

(4) Keeping records of each inspection that include the information in paragraphs (b)(4)(i) through (iii) of this section:

(i) A closed vent system identification number (or other unique identification description you select).

(ii) Date of each inspection.

(iii) If a defect is detected during an inspection, the location of the defect, a description of the defect, the date of detection, the corrective action taken to repair the defect, and if repair is delayed, the reason for any delay and the date completion of the repair is expected.

(5) If you elect to monitor the closed vent system according to the requirements in §63.172(f) through (j), recording the information in §63.181.

(6) If the closed vent system is equipped with a flow indicator, recording the information in §63.693(c)(2)(i).

(7) If the closed vent system is equipped with a seal or locking device, visually inspecting the seal or closure mechanism at least monthly according to the requirements in §63.693(c)(2)(ii), and recording the results of each inspection.

(c) You must demonstrate continuous compliance of each control device subject to the emissions limits in §63.7925(d) with the applicable emissions limit in §63.7925(d) by meeting the requirements in paragraph (c)(1) or (2) of this section.

(1) For the emission limit in §63.7925(d)(1), maintaining the reduction in emissions of total HAP listed in Table 1 of this subpart or TOC (minus methane and ethane) from the control device at 95 percent by weight or greater.

(2) For the emission limit in §63.7925(d)(2), maintaining the concentration of total HAP listed in Table 1 of this subpart or TOC (minus methane and ethane) from the control device at 20 ppmv or less.

(d) You must demonstrate continuous compliance of each control device subject to operating limits in §63.7925(g) with the applicable limits by meeting the requirements in paragraphs (d)(1) through (4) of this section.

(1) Maintaining each operating limit according to the requirements in §63.7925(g) as applicable to the control device.

(2) Monitoring and inspecting each control device according to the requirements in §63.7927(b) through (i) as applicable to the control device.

(3) Operating and maintaining each continuous monitoring system according to the requirements in §63.7945, and collecting and reducing data according to the requirements in §63.7946.

(4) Keeping records to document compliance with the requirements of this subpart according to the requirements in §63.7952.

(e) You must demonstrate continuous compliance with the spent carbon replacement and disposal work practice standards for regenerable carbon adsorption systems in §63.7925(h)(1) by meeting the requirements in paragraphs (e)(1) through (3) of this section.

(1) Replacing the adsorbent as required by §63.7925(h)(1)(i).

(2) Following the disposal requirements for spent carbon in §63.693(d)(4)(ii).

(3) Keeping records to document compliance with the requirements of the work practice standards.

(f) You must demonstrate continuous compliance with the spent carbon replacement and disposal work practice standards for nonregenerable carbon adsorption systems in §63.7925(h)(2) by meeting the requirements in paragraphs (f)(1) through (3) of this section.

(1) Replacing the adsorbent as required by the work practice standard in §63.7925(h)(2)(i).

(2) Following the disposal requirements for spent carbon in §63.693(d)(4)(ii).

(3) Keeping records to document compliance with the requirements of the work practice standards.

(g) You must demonstrate continuous compliance with the spent carbon replacement and disposal work practice standards for nonregenerable carbon adsorption systems in §63.7925(h)(3) by meeting the requirements in paragraphs (g)(1) through (3) of this section.

(1) Monitoring the concentration level of the organic compounds in the exhaust vent for the carbon adsorption system as required in §63.7927(c), immediately replacing the carbon canister or carbon in the control device when breakthrough is indicated by the monitoring device, and recording the date of breakthrough and carbon replacement. Or, you must replace the carbon canister or carbon in the control device at regular intervals and record the date of carbon replacement.

(2) Following the disposal requirements for spent carbon in §63.693(d)(4)(ii).

(3) Keeping records to document compliance with the requirements of the work practice standards.

(h) You must demonstrate continuous compliance with the catalyst replacement work practice standards for catalytic incinerators in §63.7925(i) by meeting the requirements in paragraphs (h)(1) and (2) of this section.

(1) Replacing the existing catalyst bed as required in §63.7925(i).

(2) Keeping records to document compliance with the requirements of the work practice standards.

(i) You must demonstrate continuous compliance of each flare with the work practice standards in §63.7925(e) by meeting the requirements in paragraphs (i)(1) through (5) of this section.

(1) Operating the flare with no visible emissions except for up to 5 minutes in any 2 consecutive hours according to the requirements in §63.11(b)(4).

(2) Monitoring the presence of a pilot flare according to the requirements in §63.7927(h) and maintaining a pilot flame and flare flame at all times that emissions are not vented to the flare according to the requirements in §63.11(b)(5).

(3) Operating the flare with an exit velocity according to the requirements in §63.11(b)(6) through (8).

(4) Operating the flare with a net heating value of the gas being combusted according to the requirements in §63.11(b)(6)(ii).

(5) Keeping records to document compliance with the requirements of the work practice standards.

(j) You must demonstrate continuous compliance of each boiler or process heater with the work practice standards in §63.7925(f) by meeting the requirements in paragraphs (j)(1) through (3) of this section.

(1) For the work practice standards in §63.7925(f)(1), you must demonstrate continuous compliance by meeting the requirements in paragraphs (j)(1)(i) through (iv).

(i) Maintaining conditions in the combustion chamber at a residence time of 0.5 seconds or longer and at a combustion zone temperature at 760 °C or greater whenever the vent stream is introduced to the flame zone of the boiler or process heater.

(ii) Monitoring each boiler or process heater according to the requirements in §63.7927(i).

(iii) Operating and maintaining each continuous monitoring system according to the requirements in §63.7945, and collecting and reducing data according to the requirements in §63.7946.

(iv) Keeping records to document compliance with residence time design requirement.

(2) For the work practice standards in §63.7925(f)(2), you maintain the boiler or process heater operations such that the vent stream is introduced with the fuel according to the requirements in §63.693(g)(1)(iv), or that the vent stream is introduced to a boiler or process heater that meets the requirements in §63.693(g)(1)(v).

(3) For the work practice standard in §63.7925(f)(3), you remain in compliance with all terms and conditions of the final permit under 40 CFR part 270 and your boiler or process heater complies with the requirements of 40 CFR part 266, subpart H—Hazardous Waste Burned in Boilers and Industrial Furnaces; or in compliance with the interim status requirements of 40 CFR part 266, subpart H, as applicable to your boiler or process heater.

[68 FR 58190, Oct. 8, 2003, as amended at 71 FR 69018, Nov. 29, 2006]

General Compliance Requirements

§ 63.7935 What are my general requirements for complying with this subpart?

(a) You must be in compliance with the emissions limitations (including operating limits) and the work practice standards in this subpart at all times, except during periods of startup, shutdown, and malfunction.

(b) You must always operate and maintain your affected source, including air pollution control and monitoring equipment, according to the provisions in §63.6(e)(1)(i).

(c) You must develop a written startup, shutdown, and malfunction plan (SSMP) according to the provisions in §63.6(e)(3).

(d) [Reserved]

(e) You must report each instance in which you did not meet each emissions limitation and each operating limit that applies to you. This includes periods of startup, shutdown, and malfunction. You must also report each instance in which you did not meet the requirements for work practice standards that apply to you. These instances are

deviations from the emissions limitations and work practice standards in this subpart. These deviations must be reported according to the requirements in §63.7951.

(f) Consistent with §§63.6(e) and 63.7(e)(1), deviations that occur during a period of startup, shutdown, or malfunction are not violations if you demonstrate to the Administrator's satisfaction that you were operating in accordance with §63.6(e)(1). We will determine whether deviations that occur during a period of startup, shutdown, or malfunction are violations, according to the provisions in §63.6(e).

(g) For each monitoring system required in this section, you must develop and make available for inspection by the permitting authority, upon request, a site-specific monitoring plan that addresses the following:

(1) Installation of the continuous monitoring system sampling probe or other interface at a measurement location relative to each affected process unit such that the measurement is representative of control of the exhaust emissions (*e.g.,* on or downstream of the last control device).

(2) Performance and equipment specifications for the sample interface, the pollutant concentration or parametric signal analyzer, and the data collection and reduction system.

(3) Performance evaluation procedures and acceptance criteria (*e.g.,* calibrations).

(h) In your site-specific monitoring plan, you must also address the following:

(1) Ongoing operation and maintenance procedures according to the general requirements of §63.8(c)(1), (3), (4)(ii), (7), and (8).

(2) Ongoing data quality assurance procedures according to the general requirements of §63.8(d).

(3) Ongoing recordkeeping and reporting procedures according to the general requirements of §63.10(c), (e)(1), and (e)(2)(i).

(i) You must operate and maintain the continuous monitoring system according to the site-specific monitoring plan.

(j) You must conduct a performance evaluation of each continuous monitoring according to your site-specific monitoring plan.

[68 FR 58190, Oct. 8, 2003, as amended at 71 FR 20468, Apr. 20, 2006; 71 FR 69018, Nov. 29, 2006]

§ 63.7936 What requirements must I meet if I transfer remediation material off-site to another facility?

(a) If you transfer to another facility a remediation material generated by your remediation activities and having an average total VOHAP concentration equal to or greater than 10 ppmw (as determined using the procedures specified in §63.7943), then you must transfer the remediation material to a facility that meets the requirements in paragraph (b) of this section. You must record the name, street address, and telephone number of the facility where you send this remediation material.

(b) You may elect to transfer the remediation material to one of the following facilities:

(1) A facility where your remediation material will be directly disposed in a landfill or other land disposal unit according to all applicable Federal and State requirements.

(2) A facility subject to 40 CFR part 63, subpart DD where the exemption under §63.680(b)(2)(iii) is waived and air emissions from the management of your remediation material at the facility are controlled according to all applicable requirements in the subpart for an off-site material. Prior to sending your remediation material, you must obtain a written statement from the owner or operator of the facility to which you send your remediation material

acknowledging that the exemption under §63.680(b)(2)(iii) will be waived for all remediation material received at the facility from you and your material will be managed as an off-site material at the facility according to all applicable requirements. This statement must be signed by the responsible official of the receiving facility, provide the name and address of the receiving facility, and a copy sent to the appropriate EPA Regional Office at the addresses listed in 40 CFR 63.13.

(3) A facility where your remediation material will be managed according to all applicable requirements under this Subpart.

(i) You must prepare and include a notice with each shipment or transport of remediation material from your site. This notice must state that the remediation material contains organic HAP that are to be treated according to the provisions of this subpart. When the transport is continuous or ongoing (for example, discharge to a publicly owned treatment works), the notice must be submitted to the receiving facility owner or operator initially and whenever there is a change in the required treatment.

(ii) You may not transfer the remediation material unless the owner or operator of the facility receiving your remediation material has submitted to the EPA a written certification that he or she will manage remediation material received from you according to the requirements of §§63.7885 through 63.7957. The receiving facility owner or operator may revoke the written certification by sending a written statement to the EPA and to you providing at least 90 days notice that they rescind acceptance of responsibility for compliance with the regulatory provisions listed in this section. Upon expiration of the notice period, you may not transfer your remediation material to the facility.

(iii) By providing the written certification to the EPA, the receiving facility owner or operator accepts responsibility for compliance with the regulatory provisions listed in paragraph (b)(3) of this section with respect to any shipment of remediation material covered by the written certification. Failure to abide by any of those provisions with respect to such shipments may result in enforcement action by the EPA against the certifying entity according to the enforcement provisions applicable to violations of these provisions by owners or operators of sources.

(iv) Written certifications and revocation statements to the EPA from the receiving facility owner or operator must be signed by the responsible official of the receiving facility, provide the name and address of the receiving facility, and a copy sent to the appropriate EPA Regional Office at the addresses listed in 40 CFR 63.13. Such written certifications are not transferable.

(c) Acceptance by a facility owner or operator of remediation material from a site remediation subject to this Subpart does not, by itself, require the facility owner or operator to obtain a title V permit under 40 CFR 70.3 or 40 CFR 71.3.

§ 63.7937 How do I demonstrate initial compliance with the general standards?

(a) You must demonstrate initial compliance with the general standards in §§63.7884 through 63.7887 that apply to your affected sources by meeting the requirements in paragraphs (b) through (d) of this section, as applicable to you.

(b) You must demonstrate initial compliance with the general standards in §63.7885 that apply to your affected process vents by meeting the requirements in paragraphs (b)(1) through (4) of this section, as applicable to your process vents.

(1) If HAP emissions are controlled from the affected process vents according to the emission limitations and work practice standards specified in §63.7885(b)(1), you have met the initial compliance requirements in §63.7891.

(2) If the remediation material treated or managed by the process vented through the affected process vents has an average total VOHAP less than 10 ppmw according to §63.7885(b)(2), you have submitted as part of your notification of compliance status, specified in §63.7950, a signed statement that you have determined, according to the procedures §63.7943, and recorded the average VOHAP concentration of the remediation material placed in the affected remediation material management unit.

(3) If HAP emissions are controlled from the affected process vents to meet standards in another subpart under 40 CFR part 61 or 40 CFR part 63 according to §63.7885(b)(3), you have submitted as part of your notification of

compliance status, specified in §63.7950, a signed statement that you have met the requirements in paragraphs (b)(3)(i) and (ii) of this section.

(i) You include in your statement the citations for the specific emission limitations and work practice standards that apply to the process vents under the subpart in 40 CFR part 61 or 40 CFR part 63 that the vents are also subject.

(ii) You are complying with all applicable emissions limitations and work practice standards specified by the applicable subpart.

(4) For each process vent exempted according to §63.7885(c), you have submitted as part of your notification of compliance status, specified in §63.7950, a signed statement that you have met the requirements in paragraphs (b)(4)(i) and (ii) of this section.

(i) You identify in your statement each process vent that qualifies for an exemption and the exemption conditions in §63.7885(c)(1)(i) or (ii) that apply to each exempted process vent.

(ii) You have performed the measurements and prepared the documentation required in §63.7885(c)(2) that demonstrates that each exempted process vent stream meets the applicable exemption conditions in §63.7885(c)(1).

(c) You must demonstrate initial compliance with the general standards in §63.7886 that apply to your affected remediation material management units by meeting the requirements in paragraphs (c)(1) through (6) of this section, as applicable to your remediation material management units.

(1) If the remediation material management unit uses air pollution controls according to the standards specified in §63.7886(b)(1), you have met the initial compliance requirements applicable to the remediation material management unit in §§63.7896, 63.7901, 63.7906, 63.7911, or 63.7816.

(2) If the remediation material managed in the affected remediation material management unit has an average total VOHAP concentration less than 500 ppmw according to §63.7886(b)(2), you have submitted as part of your notification of compliance status, specified in §63.7950, a signed statement that you have determined, according to the procedures in §63.7943, and recorded the average VOHAP concentration of the remediation material placed in the affected remediation material management unit.

(3) If HAP emissions are controlled from the affected remediation material management units to meet standards in another subpart under 40 CFR part 61 or 40 CFR part 63 according to §63.7886(b)(3), you have submitted as part of your notification of compliance status, specified in §63.7950, a signed statement that you have met the requirements in paragraphs (c)(3)(i) and (ii) of this section.

(i) You include in your statement the citations for the specific emission limitations and work practice standards that apply to the remediation material management units under the subpart in 40 CFR part 61 or 40 CFR part 63 that the units are also subject.

(ii) You are complying with all applicable emissions limitations and work practice standards specified by the applicable subpart.

(4) If HAP emissions are controlled from the affected remediation material management unit that is an open tank or surface impoundment used for a biological treatment process according to §63.7886(b)(4), you have submitted as part of your notification of compliance status, specified in §63.7950, a signed statement that you have met the requirements in paragraphs (c)(4)(i) and (ii) of this section.

(i) You have performed the measurements and prepared the documentation required in §63.7886(b)(4)(i) that demonstrates that each unit meets the applicable performance levels.

(ii) You will monitor the biological treatment process conducted in each unit according to the requirements in §63.684(e)(4).

(5) For each remediation material management unit used for cleanup of radioactive mixed waste and exempted according to §63.7886(c), you have submitted as part of your notification of compliance status, specified in §63.7950, a signed statement that you have met the requirements in paragraphs (c)(5)(i) and (ii) of this section.

(i) You include in your statement the citations for the specific requirements that apply to the remediation material management units under regulations, directives, and other requirements under the Atomic Energy Act, the Nuclear Waste Policy Act, or the Waste Isolation Pilot Plant Land Withdrawal Act.

(ii) You are complying with all requirements that apply to the remediation material management units under the applicable regulations or directives.

(6) For each remediation material management unit exempted according to §63.7886(d), you have submitted as part of your notification of compliance status, specified in §63.7950, a signed statement that you have met the requirements in paragraphs (c)(6)(i) and (ii) of this section.

(i) You have designated according to the requirements in §63.7886(d)(1) each of the remediation material management units you are selecting to be exempted.

(ii) You have performed an initial determination and prepared the documentation required in §63.7886(d)(2) that demonstrates that the total annual HAP quantity (based on the HAP listed in Table 1 of this subpart) in the remediation material placed in all of the designated exempted remediation material management units will be less than 1 Mg/yr.

(d) You must demonstrate initial compliance with the general standards in §63.7887 that apply to your affected equipment leak sources by meeting the requirements in §63.7921.

[68 FR 58190, Oct. 8, 2003, as amended at 71 FR 69018, Nov. 29, 2006]

§ 63.7938 How do I demonstrate continuous compliance with the general standards?

(a) You must demonstrate continuous compliance with the general standards in §§63.7884 through 63.7887 that apply to your affected sources by meeting the requirements in paragraphs (b) through (d) of this section, as applicable to you.

(b) You have demonstrated continuous compliance with the general standards in §63.7885 that apply to your affected process vents by meeting the requirements in paragraphs (b)(1) through (4) of this section, as applicable to your process vents.

(1) If HAP emissions are controlled from the affected process vents according to the emission limitations and work practice standards specified in §63.7885(b)(1), you must demonstrate continuous compliance by meeting the requirements in §63.7893.

(2) If the remediation material treated or managed by the process vented through the affected process vents has an average total VOHAP less than 10 ppmw according to §63.7885(c)(1), you must demonstrate continuous compliance by performing a new determination and preparing new documentation as required in §63.7885(c)(2) to show that the total VOHAP concentration of the remediation material remains less than 10 ppmw.

(3) If HAP emissions are controlled from the affected process vents to meet standards in another subpart under 40 CFR part 61 or 40 CFR part 63 according to §63.7885(b)(3), you must demonstrate continuous compliance by complying with all applicable emissions limitations and work practice standards specified by the applicable subpart.

(4) For each process vent exempted according to §63.7885(c), you must demonstrate continuous compliance by performing new measurements and preparing new documentation as required in §63.7885(c)(2) that demonstrates that each exempted process vent stream meets the applicable exemption conditions in §63.7885(c)(1).

(c) You must demonstrate continuous compliance with the general standards in §63.7886 that apply to your affected remediation material management units by meeting the requirements in paragraphs (c)(1) through (6) of this section, as applicable to your remediation material management units.

(1) If the remediation material management unit uses air pollution controls according to the standards specified in §63.7886(b)(1), you must demonstrate continuous compliance by meeting the requirements applicable to the remediation material management unit in §§63.7898, 63.7903, 63.7908, 63.7913, or 63.7818.

(2) If the remediation material managed in the affected remediation material managements has an average total VOHAP concentration less than 500 ppmw according to §63.7886(b)(2), you must demonstrate continuous compliance by performing a new determination and preparing new documentation as required in §63.7886(c)(2) to show that the total VOHAP concentration of the remediation material remains less than 500 ppmw.

(3) If HAP emissions are controlled from the affected remediation material management units to meet standards in another subpart under 40 CFR part 61 or 40 CFR part 63 according to §63.7886(b)(3), you must demonstrate continuous compliance by meeting all applicable emissions limitations and work practice standards specified by the applicable subpart.

(4) If HAP emissions are controlled from the affected remediation material management unit that is an open tank or surface impoundment used for a biological treatment process according to §63.7886(b)(4), you must demonstrate continuous compliance by meeting the requirements in paragraphs (c)(4)(i) and (ii) of this section.

(i) Performing new measurements and preparing new documentation as required in §63.7886(4)(i) that demonstrates that each unit meets the applicable performance levels.

(ii) Monitoring the biological treatment process conducted in each unit according to the requirements in §63.7886(4)(i).

(5) For each remediation material management unit used for cleanup of radioactive mixed waste and exempted according to §63.7886(c), you must demonstrate continuous compliance by meeting all requirements that apply to the remediation material management units under the applicable regulations or directives.

(6) For each remediation material management unit exempted according to §63.7886(d), you must demonstrate continuous compliance by performing new measurements and preparing new documentation as required in §63.7886(d)(2) to show that the total annual HAP quantity (based on the HAP listed in Table 1 of this subpart) in the remediation material placed in all of the designated exempted remediation material management units remains less than 1 Mg/yr.

(d) You have demonstrated continuous compliance with the general standards in §63.7887 that apply to your affected equipment leak sources by meeting the requirements in §63.7923.

[68 FR 58190, Oct. 8, 2003, as amended at 71 FR 69018, Nov. 29, 2006]

Performance Tests

§ 63.7940 By what date must I conduct performance tests or other initial compliance demonstrations?

(a) You must conduct a performance test or design evaluation for each existing affected source within 180 calendar days after the compliance date that is specified in §63.7883.

(b) For each work practice standard that applies to you where initial compliance is not demonstrated using a performance test or design evaluation, you must demonstrate initial compliance within 30 calendar days after the compliance date that is specified in §63.7883 for your affected source.

(c) For new sources, you must conduct initial performance tests and other initial compliance demonstrations according to the provisions in §63.7(a)(2).

[68 FR 58190, Oct. 8, 2003, as amended at 71 FR 69019, Nov. 29, 2006]

§ 63.7941 How do I conduct a performance test, design evaluation, or other type of initial compliance demonstration?

(a) You must conduct a performance test or design evaluation to demonstrate initial compliance for each new or existing affected source that is subject to an emission limit in this subpart. You must report the results of the performance test or design evaluation according to the requirements in §63.7950(e)(1).

(b) If you choose to conduct a performance test to demonstrate initial compliance, you must conduct the test according to the requirements in §63.7(e)(1) and paragraphs (b) (1) through (5) of this section.

(1) You must conduct three separate test runs for each performance test required in this section, as specified in §63.7(e)(3). Each test run must last at least 1 hour.

(2) You may not conduct performance tests during periods of startup, shutdown, or malfunction, as specified in §63.7(e)(1).

(3) You must conduct each performance test using the test methods and procedures in §63.694(l).

(4) Follow the procedures in paragraphs (b)(4)(i) through (iii) of this section to determine compliance with the facility-wide total organic mass emissions rate in §63.7890(a)(1)(i).

(i) Determine compliance with the total organic mass flow rate using Equation 1 of this section as follows:

$$E_h = \left(0.0416 \times 10^{-6}\right) Q_{sd} \sum_{i=1}^{n} \left(C_i \times MW_i\right) \qquad \text{(Eq. 1)}$$

Where:

E_h= Total organic mass flow rate, kg/h;

Q_{sd}= Volumetric flow rate of gases entering or exiting control device (or exiting the process vent if no control device is used), as determined by Method 2 of 40 CFR part 60, appendix A, dscm/h;

n = Number of organic compounds in the vent gas;

C_i= Organic concentration in ppm, dry basis, of compound i in the vent gas, as determined by Method 18 of 40 CFR part 60, appendix A;

MW_i= Molecular weight of organic compound i in the vent gas,kg/kg-mol;

(ii) Determine compliance with the annual total organic emissions rate using Equation 2 of this section as follows:

$$E_A = E_h \times H \qquad \text{(Eq. 2)}$$

Where:

E_A= Total organic mass emissions rate, kilograms per year;

E_h= Total organic mass flow rate for the process vent, kg/h;

H = Total annual hours of operation for the affected unit, h.

(iii) Determine compliance with the total organic emissions limit from all affected process vents at the facility by summing the total hourly organic mass emissions rates ($E_h$as determined in Equation 1 of this section) and summing the total annual organic mass emissions rates (E_A, as determined in Equation 2 of this section) for all affected process vents at the facility.

(5) Determine compliance with the 95 percent reduction limit in §63.7890(a)(2)(i) for the combination of all affected process vents at the facility using Equations 3 and 4 of this section to calculate control device inlet and outlet concentrations and Equation 5 of this section to calculate control device emission reductions for process vents as follows:

$$E_i = K_2 \left(\sum_{j=1}^{n} C_{ij} M_{ij} \right) Q_i \quad (Eq.\ 3)$$

$$E_o = K_2 \left(\sum_{j=1}^{n} C_{oj} M_{oj} \right) Q_o \quad (Eq.\ 4)$$

Where:

C_{ij}, C_{oj}= Concentration of sample component j of the gas stream at the inlet and outlet of the control device, dry basis, parts per million by volume. For uncontrolled vents, C_{ij}= $C_{oj}$and equal the concentration exiting the vent;

E_i, E_o= Mass rate of total organic compounds (TOC) (minus methane and ethane) or total HAP, from Table 1 of this subpart, at the inlet and outlet of the control device, respectively, dry basis, kilogram per hour. For uncontrolled vents, E_i= $E_o$and equal the concentration exiting the vent;

M_{ij}, M_{oj}= Molecular weight of sample component j of the gas stream at the inlet and outlet of the control device, respectively, gram/gram-mole. For uncontrolled vents, M_{ij}= $M_{oj}$and equal the gas stream molecular weight exiting the vent;

Q_i, Q_o= Flowrate of gas stream at the inlet and outlet of the control device, respectively, dry standard cubic meters per minute (dscm/min). For uncontrolled vents, Q_i= $Q_o$and equals the flowrate exiting the vent;

K_2= Constant, 2.494×10^{-6}(parts per million)$^{-1}$(gram-mole per standard cubic meter) (kilogram/gram)(minute/hour, where standard temperature (gram-mole per standard cubic meter) is 20 °C);

n = the number of components in the sample.

$$R_v = \frac{\sum_{j=1}^{n} E_i - \sum_{j=1}^{n} E_o}{\sum_{j=1}^{n} E_i} \times 100 \quad (Eq.\ 5)$$

Where:

R_v= Overall emissions reduction for all affected process vents, percent

E_i= Mass rate of TOC (minus methane and ethane) or total HAP, from Table 1 of this subpart, at the inlet to the control device, or exiting the vent for uncontrolled vents, as calculated in this section, kilograms TOC per hour or kilograms HAP per hour;

E_o= Mass rate of TOC (minus methane and ethane) or total HAP, from Table 1 of this subpart, at the outlet to the control device, or exiting the vent for uncontrolled vents, as calculated in this section, kilograms TOC per hour or kilograms HAP per hour. For vents without a control device, E_o= E_i;

n = number of affected source process vents.

(c) If you use a carbon adsorption system, condenser, vapor incinerator, boiler, or process heater to meet an emission limit in this subpart, you may choose to perform a design evaluation to demonstrate initial compliance instead of a performance test. You must perform a design evaluation according to the general requirements in §63.693(b)(8) and the specific requirements in §63.693(d)(2)(ii) for a carbon adsorption system (including establishing carbon replacement schedules and associated requirements), §63.693(e)(2)(ii) for a condenser, §63.693(f)(2)(ii) for a vapor incinerator, or §63.693(g)(2)(i)(B) for a boiler or process heater.

(d) During the performance test or design evaluation, you must collect the appropriate operating parameter monitoring system data, average the operating parameter data over each test run, and set operating limits, whether a minimum or maximum value, based on the average of values for each of the three test runs. If you use a control device design analysis to demonstrate control device performance, then the minimum or maximum operating parameter value must be established based on the control device design analysis and supplemented, as necessary, by the control device manufacturer recommendations or other applicable information.

(e) If you control air emissions from an affected source by introducing the vent stream into the flame zone of a boiler or process heater according to the requirements in §63.693(g)(1)(iii), you must conduct a performance test or design evaluation to demonstrate that the boiler or process heater meets the applicable emission limit while operating at a residence time of 0.5 seconds or greater and at a combustion zone temperature of 760 °C or higher.

(f) You must conduct a performance evaluation for each continuous monitoring system according to the requirements in §63.8(e).

(g) If you are required to conduct a visual inspection of an affected source, you must conduct the inspection according to the procedures in §63.906(a)(1) for Tank Level 1 controls, §63.1063(d) for Tank Level 2 controls, §63.926(a) for Container Level 1 controls, §63.946(a) for a surface impoundment equipped with a floating membrane cover, §63.946(b) for a surface impoundment equipped with a cover and vented to a control device, §63.1047(a) for a separator with a fixed roof, §63.1047(c) for a separator equipped with a fixed roof and vented to a control device, §63.695(c)(1)(i) or (c)(2)(i) for a closed vent system, and §63.964(a) for individual drain systems.

(h) [Reserved]

(i) If you use Container Level 2 controls, you must conduct a test to demonstrate that the container operates with no detectable organic emissions or that the container is vapor-tight. You must conduct the test using Method 21 (40 CFR part 60, appendix A) and the procedures in §63.925(a) to demonstrate that the container operates with no detectable organic emissions or Method 27 (40 CFR part 60, appendix A) and the procedures in §63.925(b) to demonstrate that the container is vapor-tight.

(j) If you locate an affected source inside a permanent total enclosure that is vented to a control device, you must demonstrate that the enclosure meets the verification criteria in section 5 of Procedure T in 40 CFR 52.741, appendix B.

(k) If you use a fixed roof or a floating roof to control air emissions from a separator, you must conduct a test to demonstrate that the roof operates with no detectable organic emissions using Method 21 (40 CFR part 60, appendix

A) and the procedures in §63.1046(a). If you use a floating roof, you also must measure the seal gaps according to the procedures in §63.1046(b).

(l) If you use a flare to control air emissions, you must conduct a visible emissions test using Method 22 in 40 CFR part 60, appendix A, and the procedures in §63.11(b)(4).

(m) For each initial compliance demonstration that requires a performance test or design evaluation, you must report the results in your notification of compliance status according to the requirements in §63.7950(e)(1). For each initial compliance demonstration that does not require a performance test or design evaluation, you must submit a notification of compliance status according to the requirements in §63.7950(e)(2).

[68 FR 58190, Oct. 8, 2003, as amended at 71 FR 69019, Nov. 29, 2006]

§ 63.7942 When must I conduct subsequent performance tests?

For non-flare control devices, you must conduct performance tests at any time the EPA requires you to according to §63.7(3).

§ 63.7943 How do I determine the average VOHAP concentration of my remediation material?

(a) General requirements. You must determine the average total VOHAP concentration of a remediation material using either direct measurement as specified in paragraph (b) of this section or by knowledge as specified in paragraph (c) of this section. These methods may be used to determine the average VOHAP concentration of any material listed in (a)(1) through (3) of this section.

(1) A single remediation material stream; or

(2) Two or more remediation material streams that are combined prior to, or within, a remediation material management unit or treatment process; or

(3) Remediation material that is combined with one or more non-remediation material streams prior to, or within, a remediation material management unit or treatment process.

(b) Direct measurement. To determine the average total VOHAP concentration of a remediation material using direct measurement, you must use the procedures in paragraphs (b)(1) through (3) of this section.

(1) Sampling. Samples of each material stream must be collected from the container, pipeline, or other device used to deliver each material stream prior to entering the remediation material management unit or treatment process in a manner such that volatilization of organics contained in the sample is minimized and an adequately representative sample is collected and maintained for analysis by the selected method.

(i) The averaging period to be used for determining the average total VOHAP concentration for the material stream on a mass-weighted average basis must be designated and recorded. The averaging period can represent any time interval that you determine is appropriate for the material stream but must not exceed 1 year. For streams that are combined, an averaging period representative for all streams must be selected.

(ii) No less than four samples must be collected to represent the complete range of HAP compositions and HAP quantities that occur in each material stream during the entire averaging period due to normal variations in the material stream(s). Examples of such normal variations are variation of the HAP concentration within a contamination area.

(iii) All samples must be collected and handled according to written procedures you prepare and document in a site sampling plan. This plan must describe the procedure by which representative samples of the material stream(s) are collected such that a minimum loss of organics occurs throughout the sample collection and handling process and by

which sample integrity is maintained. A copy of the written sampling plan must be maintained on site in the facility operating records. An example of an acceptable sampling plan includes a plan incorporating sample collection and handling procedures according to the guidance found in "Test Methods for Evaluating Solid Waste, Physical/Chemical Methods," EPA Publication No. SW–846 or Method 25D in 40 CFR part 60, appendix A.

(2) Analysis. Each collected sample must be prepared and analyzed according to either one of the methods listed in §63.694(b)(2)(ii), or any current EPA Contracts Lab Program method (or future revisions) capable of identifying all the HAP in Table 1 of this subpart.

(3) Calculations. The average total VOHAP concentration (C) on a mass-weighted basis must be calculated by using the results for all samples analyzed according to paragraph (b)(2) of this section and Equation 1 of this section as follows:

$$\bar{C} = \frac{1}{Q_T} \times \sum_{i=1}^{n} (Q_i \times C_i) \qquad (Eq.\ 1)$$

Where:

C= Average VOHAP concentration of the material on a mass-weighted basis, ppmw.

i = Individual sample "i" of the material.

n = Total number of samples of the material collected (at least 4 per stream) for the averaging period (not to exceed 1 year).

Q_i= Mass quantity of material stream represented by C_i, kilograms per hour (kg/hr).

Q_T= Total mass quantity of all material during the averaging period, kg/hr.

C_i= Measured VOHAP concentration of sample "i" as determined according to the requirements of paragraph (b)(2) of this section, ppmw.

(c) Knowledge of the material. To determine the average total VOHAP concentration of a remediation material using knowledge, you must use the procedures in paragraphs (c)(1) through (3) of this section.

(1) Documentation must be prepared that presents the information used as the basis for your knowledge of the material stream's average VOHAP concentration. Examples of information that may be used as the basis for knowledge include: material balances for the source(s) generating each material stream; species-specific chemical test data for the material stream from previous testing that are still applicable to the current material stream; test data for material from the contamination area(s) being remediated.

(2) If test data are used as the basis for knowledge, then you must document the test method, sampling protocol, and the means by which sampling variability and analytical variability are accounted for in the determination of the average VOHAP concentration. For example, you may use HAP concentration test data for the material stream that are validated according to Method 301 in 40 CFR part 63, appendix A as the basis for knowledge of the material. This information must be provided for each material stream where streams are combined.

(3) If you use species-specific chemical concentration test data as the basis for knowledge of the material, you may adjust the test data to the corresponding average VOHAP concentration value which would be obtained had the material samples been analyzed using Method 305. To adjust these data, the measured concentration for each individual HAP chemical species contained in the material is multiplied by the appropriate species-specific adjustment factor (f_{m305}) listed in Table 1 of this subpart.

(d) In the event that you and us disagree on a determination using knowledge of the average total VOHAP concentration for a remediation material, then the results from a determination of VOHAP concentration using direct

measurement by Method 305 in 40 CFR part 60 appendix A, as specified in paragraph (b) of this section, will be used to determine compliance with the applicable requirements of this subpart. We may perform or request that you perform this determination using direct measurement.

[68 FR 58190, Oct. 8, 2003, as amended at 71 FR 69019, Nov. 29, 2006]

§ 63.7944 How do I determine the maximum HAP vapor pressure of my remediation material?

(a) You must determine the maximum HAP vapor pressure of your remediation material using either direct measurement as specified in paragraph (b) of this section or by knowledge as specified in paragraph (c) of this section.

(b) Direct measurement to determine the maximum HAP vapor pressure.

(1) Sampling. A sufficient number of samples must be collected to be representative of the remediation material contained in the tank. All samples must be collected and handled according to written procedures prepared by you and documented in a site sampling plan. This plan must describe the procedure by which representative samples of the remediation material are collected such that a minimum loss of organics occurs throughout the sample collection and handling process and by which sample integrity is maintained. A copy of the written sampling plan must be maintained on site in the facility site operating records. An example of an acceptable sampling plan includes a plan incorporating sample collection and handling procedures according to the guidance found in “Test Methods for Evaluating Solid Waste, Physical/Chemical Methods,” EPA Publication No. SW–846 or Method 25D in 40 CFR part 60, appendix A.

(2) Analysis. Any one of the following methods may be used to analyze the samples and compute the maximum HAP vapor pressure of the remediation material:

(i) Method 25E in 40 CFR part 60 appendix A;

(ii) Methods described in American Petroleum Institute Bulletin 2517, “Evaporation Loss from External Floating Roof Tanks,”;

(iii) Methods obtained from standard reference texts;

(iv) ASTM Method 2879–83; or

(v) Any other method approved by the Administrator.

(c) Use of knowledge to determine the maximum HAP vapor pressure. Documentation must be prepared and recorded that presents the information used as the basis for your knowledge that the maximum HAP vapor pressure of the remediation material is less than the maximum vapor pressure limit listed in Table 2 of this subpart for the applicable tank design capacity category.

(d) In the event that you and us disagree on a determination using knowledge of the maximum HAP vapor pressure of the remediation material, then the results from a determination of maximum HAP vapor pressure using direct measurement by Method 25E in 40 CFR part 60 appendix A, as specified in paragraph (b) of this section, will be used to determine compliance with the applicable requirements of this subpart. We may perform or request that you perform this determination using direct measurement.

Continuous Monitoring Systems

§ 63.7945 What are my monitoring installation, operation, and maintenance requirements?

(a) Each CPMS must meet the requirements in paragraphs (a)(1) through (4) of this section.

(1) Complete a minimum of one cycle of operation for each successive 15-minute period.

(2) To calculate a valid hourly value, you must have at least three of four equally spaced data values (or at least two, if that condition is included to allow for periodic calibration checks) for that hour from a CPMS that is not out of control according to the monitoring plan referenced in §63.7935.

(3) To calculate the average emissions for each averaging period, you must have at least 75 percent of the hourly averages for that period using only block hourly average values that are based on valid data (*i.e.,* not from out-of-control periods).

(4) Unless otherwise specified, each CPMS must determine the hourly average of all recorded readings and daily average, if required.

(b) You must record the results of each inspection, calibration, and validation check.

(c) You must conduct a performance evaluation for each CPMS according to the requirements in §63.8(e) and your site-specific monitoring plan.

§ 63.7946 How do I monitor and collect data to demonstrate continuous compliance?

(a) You must monitor and collect data according to this section and your site-specific monitoring plan required in §63.7935.

(b) Except for monitor malfunctions, associated repairs, and required quality assurance or control activities (including, as applicable, calibration checks and required zero and span adjustments), you must monitor continuously (or collect data at all required intervals) at all times that the affected source is operating.

(c) You may not use data recorded during monitoring malfunctions, associated repairs, out of control periods and required quality assurance or control activities in data averages and calculations used to report emissions or operating levels, nor may such data be used in fulfilling a minimum data availability requirement, if applicable. You must use all the data collected during all other periods in assessing the operation of the control device and associated control system.

§ 63.7947 What are my monitoring alternatives?

(a) As an alternative to the parametric monitoring required in this subpart, you may install, calibrate, and operate a continuous emission monitoring system (CEMS) to measure the control device outlet total organic emissions or organic HAP emissions concentration.

(1) The CEMS used on combustion control devices must include a diluent gas monitoring system (for O_2or CO_2) with the pollutant monitoring system in order to correct for dilution (*e.g.,* to 0 percent excess air).

(2) Each CEMS must complete a minimum of one cycle of operation (sampling, analyzing, and data recording) for each successive 15-minute period. Data must be reduced as specified in §63.8(g)(2).

(3) You must conduct a performance evaluation of the CEMS according to the requirements in §63.8 and Performance Specification 8 (for a total organic emissions CEMS) or Performance Specification 9 (for a HAP emissions CEMS) and Performance Specification 3 (for an O_2or CO_2CEMS) of 40 CFR part 60, appendix B. The relative accuracy provision of Performance Specification 8, sections 2.4 and 3 need not be conducted.

(4) You must prepare a site-specific monitoring plan for operating, calibrating, and verifying the operation of your CEMS according to the requirements in §§63.8(c), (d), and (e).

(5) You must establish the emissions concentration operating limit according to paragraphs (a)(5)(i) and (ii) of this section.

(i) During the performance test, you must monitor and record the total organic or HAP emissions concentration at least once every 15 minutes during each of the three test runs.

(ii) Use the data collected during the performance test to calculate and record the average total organic or HAP emissions concentration maintained during the performance test. The average total organic or HAP emissions concentration, corrected for dilution as appropriate, is the maximum operating limit for your control device.

(b) You must maintain the daily (24-hour) average total organic or HAP emissions concentration in the exhaust vent stream of the control device outlet less than or equal to the site-specific operating limit established during the performance test.

Notification, Reports, and Records

§ 63.7950 What notifications must I submit and when?

(a) You must submit all of the notifications in §§63.7(b) and (c), 63.8(e), 63.8(f)(4) and (6), and 63.9(b) through (h) that apply to you.

(b) As specified in §63.9(b)(2), if you start up your affected source before October 8, 2003, you must submit an Initial Notification not later than 120 calendar days after October 8, 2003.

(c) As specified in §63.9(b)(3), if you start up your new or reconstructed affected source on or after the effective date, you must submit an Initial Notification no later than 120 calendar days after initial startup.

(d) If you are required to conduct a performance test, you must submit a notification of intent to conduct a performance test at least 60 calendar days before the performance test is scheduled to begin as required in §63.7(b)(1).

(e) If you are required to conduct a performance test, design evaluation, or other initial compliance demonstration, you must submit a Notification of Compliance Status according to §63.9(h)(2)(ii).

(1) For each initial compliance demonstration that includes a performance test or design evaluation, you must submit the Notification of Compliance Status, including the performance test results, before the close of business on the 60th calendar day following the completion of the performance test according to §63.10(d)(2). You must submit the complete design evaluation and supporting documentation.

(2) For each initial compliance demonstration that does not include a performance test, you must submit the Notification of Compliance Status before the close of business on the 30th calendar day following the completion of the initial compliance demonstration.

(f) You must provide written notification to the Administrator of the alternative standard selected under §63.1006(b)(5) or (6) before implementing either of the provisions.

[68 FR 58190, Oct. 8, 2003, as amended at 71 FR 69019, Nov. 29, 2006]

§ 63.7951 What reports must I submit and when?

(a) Compliance report due dates. Unless the Administrator has approved a different schedule, you must submit a semiannual compliance report to your permitting authority according to the requirements specified in paragraphs (a)(1) through (5) of this section.

(1) The first compliance report must cover the period beginning on the compliance date that is specified for your affected source in §63.7883 and ending on June 30 or December 31, whichever date comes first after the compliance date that is specified for your affected source.

(2) The first compliance report must be postmarked or delivered no later than July 31 or January 31, whichever date comes first after your first compliance report is due.

(3) Each subsequent compliance report must cover the semiannual reporting period from January 1 through June 30 or the semiannual reporting period from July 1 through December 31.

(4) Each subsequent compliance report must be postmarked or delivered no later than July 31 or January 31, whichever date comes first after the end of the semiannual reporting period.

(5) For each affected source that is subject to permitting regulations pursuant to 40 CFR part 70 or 40 CFR part 71, and if the permitting authority has established dates for submitting semiannual reports pursuant to 40 CFR 70.6(a)(3)(iii)(A) or 40 CFR 71.6(a)(3)(iii)(A), you may submit the first and subsequent compliance reports according to the dates the permitting authority has established instead of the dates specified in paragraphs (a)(1) through (4) of this section.

(b) Compliance report contents. Each compliance report must include the information specified in paragraphs (b)(1) through (3) of this section and, as applicable, paragraphs (b)(4) through (9) of this section.

(1) Company name and address.

(2) Statement by a responsible official, with that official's name, title, and signature, certifying the truth, accuracy, and completeness of the content of the report.

(3) Date of report and beginning and ending dates of the reporting period.

(4) If you had a startup, shutdown, or malfunction during the reporting period and you took action consistent with your startup, shutdown, and malfunction plan, the compliance report must include the information in §63.10(d)(5)(i).

(5) If there were no deviations from any emissions limitations (including operating limit), work practice standards, or operation and maintenance requirements, a statement that there were no deviations from the emissions limitations, work practice standards, or operation and maintenance requirements during the reporting period.

(6) If there were no periods during which a continuous monitoring system (including a CPMS or CEMS) was out-of-control as specified by §63.8(c)(7), a statement that there were no periods during which the CPMS was out-of-control during the reporting period.

(7) For each deviation from an emissions limitation (including an operating limit) that occurs at an affected source for which you are not using a continuous monitoring system (including a CPMS or CEMS) to comply with an emissions limitation or work practice standard required in this subpart, the compliance report must contain the information specified in paragraphs (b)(1) through (4) and (b)(7)(i) and (ii) of this section. This requirement includes periods of startup, shutdown, and malfunction.

(i) The total operating time of each affected source during the reporting period.

(ii) Information on the number, duration, and cause of deviations (including unknown cause) as applicable and the corrective action taken.

(8) For each deviation from an emissions limitation (including an operating limit) or work practice standard occurring at an affected source where you are using a continuous monitoring system (including a CPMS or CEMS) to comply with the emissions limitations or work practice standard in this subpart, you must include the information specified in paragraphs (b)(1) through (4) and (b)(8)(i) through (xi) of this section. This requirement includes periods of startup, shutdown, and malfunction.

(i) The date and time that each malfunction started and stopped.

(ii) The date and time that each continuous monitoring system was inoperative, except for zero (low-level) and high-level checks.

(iii) The date, time, and duration that each continuous monitoring system was out-of-control, including the information in §63.8(c)(8).

(iv) The date and time that each deviation started and stopped, and whether each deviation occurred during a period of startup, shutdown, or malfunction or during another period.

(v) A summary of the total duration of the deviations during the reporting period and the total duration as a percent of the total source operating time during that reporting period.

(vi) A breakdown of the total duration of the deviations during the reporting period into those that are due to startup, shutdown, control equipment problems, process problems, other known causes, and unknown causes.

(vii) A summary of the total duration of continuous monitoring system downtime during the reporting period and the total duration of continuous monitoring system downtime as a percent of the total source operating time during the reporting period.

(viii) A brief description of the process units.

(ix) A brief description of the continuous monitoring system.

(x) The date of the latest continuous monitoring system certification or audit.

(xi) A description of any changes in continuous monitoring systems, processes, or controls since the last reporting period.

(9) You must include the information on equipment leaks required in periodic reports by §63.1018(a) or §63.1039(b).

(c) Immediate startup, shutdown, and malfunction report. If you had a startup, shutdown, or malfunction during the semiannual reporting period that was not consistent with your startup, shutdown, and malfunction plan, you must submit an immediate startup, shutdown, and malfunction report according to the requirements of §63.10(d)(5)(ii) .

(d) Part 70 monitoring report. If you have obtained a title V operating permit for an affected source pursuant to 40 CFR part 70 or 40 CFR part 71, you must report all deviations as defined in this subpart in the semiannual monitoring report required by 40 CFR 70.6(a)(3)(iii)(A) or 40 CFR 71.6(a)(3)(iii)(A). If you submit a compliance report for an affected source along with, or as part of, the semiannual monitoring report required by 40 CFR 70.6(a)(3)(iii)(A) or 40 CFR 71.6(a)(3)(iii)(A), and the compliance report includes all the required information concerning deviations from any emissions limitation or operation and maintenance requirement in this subpart, submission of the compliance report satisfies any obligation to report the same deviations in the semiannual monitoring report. However, submission of a compliance report does not otherwise affect any obligation you may have to report deviations from permit requirements for an affected source to your permitting authority.

§ 63.7952 What records must I keep?

(a) You must keep the records specified in paragraphs (a)(1) through (4) of this section.

(1) A copy of each notification and report that you submitted to comply with this subpart, including all documentation supporting any Initial Notification or Notification of Compliance Status that you submitted, according to the requirements in §63.10(b)(1) and (b)(2)(xiv).

(2) The records in §63.6(e)(3)(iii) through (v) related to startups, shutdowns, and malfunctions.

(3) Results of performance tests and performance evaluations as required by §63.10(b)(2)(viii).

(4) The records of initial and ongoing determinations for affected sources that are exempt from control requirements under this subpart.

(b) For each continuous monitoring system, you must keep the records as described in paragraphs (b)(1) and (2) of this section.

(1) Records described in §63.10(b)(2)(vi) through (xi) that apply to your continuous monitoring system.

(2) Performance evaluation plans, including previous (i.e., superseded) versions of the plan as required in §63.8(d)(3).

(c) You must keep the records required by this subpart to show continuous compliance with each emissions limitation, work practice standard, and operation and maintenance requirement that applies to you.

(d) You must record, on a semiannual basis, the information in §63.696(g) for planned routine maintenance of a control device for emissions from process vents.

§ 63.7953 In what form and how long must I keep my records?

(a) Your records must be in a form suitable and readily available for expeditious review, according to §63.10(b)(1).

(b) As specified in §63.10(b)(1), you must keep your files of all information (including all reports and notifications) for 5 years following the date of each occurrence, measurement, maintenance, action taken to correct the cause of a deviation, report, or record.

(c) You must keep each record on site for at least 2 years after the date of each occurrence, measurement, maintenance, corrective action, report, or record, according to §63.10(b)(1). You can keep the records off-site for the remaining 3 years.

(d) If, after the remediation activity is completed, there is no other remediation activity at the facility, and you are no longer the owner of the facility, you may keep all records for the completed remediation activity at an off-site location provided you notify the Administrator in writing of the name, address and contact person for the off-site location.

Other Requirements and Information

§ 63.7955 What parts of the General Provisions apply to me?

Table 3 of this subpart shows which parts of the General Provisions in §§63.1 through 63.15 apply to you.

§ 63.7956 Who implements and enforces this subpart?

(a) This subpart can be implemented and enforced by us, the EPA, or a delegated authority such as your State, local, or tribal agency. If the EPA Administrator has delegated authority to your State, local, or tribal agency, then that agency, in addition to the EPA, has the authority to implement and enforce this subpart. You should contact your EPA Regional Office (see list in §63.13) to find out if this subpart is delegated to your State, local, or tribal agency.

(b) In delegating implementation and enforcement authority of this subpart to a State, local, or tribal agency under section 40 CFR part 63, subpart E, the authorities contained in paragraph (c) of this section are retained by the Administrator of EPA and are not transferred to the State, local, or tribal agency.

(c) The authorities that cannot be delegated to State, local, or tribal agencies are listed in paragraphs (c)(1) through (4) of this section.

(1) Approval of alternatives to the non-opacity emissions limitations and work practice standards in this subpart under §63.6(g).

(2) Approval of major changes to test methods under §63.7(e)(2)(ii) and (f) and as defined in §63.90.

(3) Approval of major changes to monitoring under §63.8(f) and as defined in §63.90.

(4) Approval of major changes to recordkeeping and reporting under §63.10(f) and as defined in §63.90.

[68 FR 58190, Oct. 8, 2003, as amended at 71 FR 69019, Nov. 29, 2006]

§ 63.7957 What definitions apply to this subpart?

Terms used in this subpart are defined in the CAA, in §63.2, and in this section. If a term is defined both in this section and in another subpart cross-referenced by this subpart, then the term will have the meaning given in this section for purposes of this subpart.

Boiler means an enclosed combustion device that extracts useful energy in the form of steam and is not an incinerator or a process heater.

Closed vent system means a system that is not open to the atmosphere and is composed of hard-piping, ductwork, connections, and, if necessary, fans, blowers, or other flow-inducing device that conveys gas or vapor from an emissions point to a control device.

Closure device means a cap, hatch, lid, plug, seal, valve, or other type of fitting that prevents or reduces air pollutant emissions to the atmosphere by blocking an opening in a cover when the device is secured in the closed position. Closure devices include devices that are detachable from the cover (*e.g.,* a sampling port cap), manually operated (*e.g.,* a hinged access lid or hatch), or automatically operated (*e.g.,* a spring-loaded pressure relief valve).

Container means a portable unit used to hold material. Examples of containers include, but are not limited to drums, dumpsters, roll-off boxes, bulk cargo containers commonly known as portable tanks or totes, cargo tank trucks, dump trucks, and rail cars. For the purpose of this subpart, a front-end loader, excavator, backhoe, or other type of self-propelled excavation equipment is not a container.

Continuous record means documentation of data values measured at least once every 15 minutes and recorded at the frequency specified in this subpart.

Continuous recorder means a data recording device that either records an instantaneous data value at least once every 15 minutes or records 15-minutes or more frequent block averages.

Control device means equipment used recovering, removing, oxidizing, or destroying organic vapors. Examples of such equipment include but are not limited to carbon adsorbers, condensers, vapor incinerators, flares, boilers, and process heaters.

Cover means a device that prevents or reduces air pollutant emissions to the atmosphere by forming a continuous barrier over the remediation material managed in a unit. A cover may have openings (such as access hatches, sampling ports, gauge wells) that are necessary for operation, inspection, maintenance, and repair of the unit on which the cover is used. A cover may be a separate piece of equipment which can be detached and removed from the unit (such as a tarp) or a cover may be formed by structural features permanently integrated into the design of the unit.

Deviation means any instance in which an affected source subject to this subpart, or an owner or operator of such a source:

(1) Fails to meet any requirement or obligation established by this subpart, including but not limited to any emissions limitation (including any operating limit), or work practice standard;

(2) Fails to meet any term or condition that is adopted to implement an applicable requirement in this subpart and that is included in the operating permit for any affected source required to obtain such a permit; or

(3) Fails to meet any emissions limitation, (including any operating limit), or work practice standard in this subpart during startup, shutdown, or malfunction, regardless of whether or not such failure is permitted by this subpart.

Emissions limitation means any emissions limit, opacity limit, operating limit, or visible emissions limit.

Emissions point means an individual tank, surface impoundment, container, oil-water, organic-water separator, transfer system, vent, or enclosure.

Enclosure means a structure that surrounds a tank or container, captures organic vapors emitted from the tank or container, and vents the captured vapor through a closed vent system to a control device.

Equipment means each pump, pressure relief device, sampling connection system, valve, and connector used in remediation material service at a facility.

External floating roof means a pontoon-type or double-deck type cover that rests on the liquid surface in a tank with no fixed roof.

Facility means all contiguous or adjoining property that is under common control including properties that are separated only by a road or other public right-of-way. Common control includes properties that are owned, leased, or operated by the same entity, parent entity, subsidiary, or any combination thereof. A unit or group of units within a contiguous property that are not under common control (*e.g.,* a wastewater treatment unit located at the facility but is owned by a different company) is a different facility.

Fixed roof means a cover that is mounted on a unit in a stationary position and does not move with fluctuations in the level of the liquid managed in the unit.

Flame zone means the portion of the combustion chamber in a boiler or process heater occupied by the flame envelope.

Floating roof means a cover consisting of a double deck, pontoon single deck, or internal floating cover which rests upon and is supported by the liquid being contained, and is equipped with a continuous seal.

Flow indicator means a device that indicates whether gas is flowing, or whether the valve position would allow gas to flow in a bypass line.

Hard-piping means pipe or tubing that is manufactured and properly installed according to relevant standards and good engineering practices.

Individual drain system means a stationary system used to convey wastewater streams or residuals to a remediation material management unit or to discharge or disposal. The term includes hard-piping, all drains and junction boxes, together with their associated sewer lines and other junction boxes (*e.g.,* manholes, sumps, and lift stations) conveying wastewater streams or residuals. For the purpose of this subpart, an individual drain system is not a drain and collection system that is designed and operated for the sole purpose of collecting rainfall runoff (*e.g.,* stormwater sewer system) and is segregated from all other individual drain systems.

Internal floating roof means a cover that rests or floats on the liquid surface (but not necessarily in complete contact with it inside a tank that has a fixed roof).

Maximum HAP vapor pressure means the sum of the individual HAP equilibrium partial pressure exerted by remediation material at the temperature equal to either: the monthly average temperature as reported by the National Weather Service when the remediation material is stored or treated at ambient temperature; or the highest calendar-month average temperature of the remediation material when the remediation material is stored at temperatures above the ambient temperature or when the remediation material is stored or treated at temperatures below the

ambient temperature. For the purpose of this subpart, maximum HAP vapor pressure is determined using the procedures specified in §63.7944.

No detectable organic emissions means no escape of organics to the atmosphere as determined using the procedure specified in §63.694(k).

Oil-water separator means a separator as defined for this subpart that is used to separate oil from water.

Operating parameter value means a minimum or maximum value established for a control device or treatment process parameter which, if achieved by itself or in combination with one or more other operating parameter values, determines that an owner or operator has complied with an applicable emissions limitation or standard.

Organic-water separator means a separator as defined for this subpart that is used to separate organics from water.

Process heater means an enclosed combustion device that transfers heat released by burning fuel directly to process streams or to heat transfer liquids other than water.

Process vent means any open-ended pipe, stack, duct, or other opening intended to allow the passage of gases, vapors, or fumes to the atmosphere and this passage is caused by mechanical means (such as compressors, vacuum-producing systems or fans) or by process-related means (such as volatilization produced by heating). For the purposes of this subpart, a process vent is neither a safety device (as defined in this section) nor a stack, duct or other opening used to exhaust combustion products from a boiler, furnace, heater, incinerator, or other combustion device.

Radioactive mixed waste means a material that contains both hazardous waste subject to RCRA and source, special nuclear, or by-product material subject to the Atomic Energy Act of 1954.

Remediation material means a material that contains one or more of the HAP listed in Table 1 of this subpart, and this material is one of the following:

(1) A material found in naturally occurring media such as soil, groundwater, surface water, sediments, or a mixture of such materials with liquids, sludges, or solids which is inseparable by simple mechanical removal processes and is made up primarily of media. This material does not include debris as defined in 40 CFR 268.2.

(2) A material found in intact or substantially intact containers, tanks, storage piles, or other storage units that requires clean up because this material poses a reasonable potential threat to contaminating media. Examples of these materials include, but are not limited to, solvents, oils, paints, and other volatile or semi-volatile organic liquids found in buried drums, cans, or other containers; gasoline, fuel oil, or other fuels in leaking underground storage tanks; and solid materials containing volatile or semi-volatile organics in unused or abandoned piles. Remediation material is not a waste or residue generated by routine equipment maintenance activities performed at a facility such as, but not limited to, tank bottoms and sludges removed during tank cleanouts; sludges and sediments removed from active wastewater treatment tanks, surface impoundments, or lagoons; spent catalyst removed from process equipment; residues removed from air pollution control equipment; and debris removed during heat exchanger and pipeline cleanouts.

Remediation material management unit means a tank, container, surface impoundment, oil-water separator, organic-water separator, or transfer system used to remove, destroy, degrade, transform, immobilize, or otherwise manage remediation material.

Remediation material service means any time when a pump, compressor, agitator, pressure relief device, sampling connection system, open-ended valve or line, valve, connector, or instrumentation system contains or contacts remediation material.

Responsible official means responsible official as defined in 40 CFR 70.2.

Safety device means a closure device such as a pressure relief valve, frangible disc, fusible plug, or any other type of device which functions to prevent physical damage or permanent deformation to equipment by venting gases or

vapors during unsafe conditions resulting from an unplanned, accidental, or emergency event. For the purpose of this Subpart, a safety device is not used for routine venting of gases or vapors from the vapor headspace underneath a cover such as during filling of the unit or to adjust the pressure in this vapor headspace in response to normal daily diurnal ambient temperature fluctuations. A safety device is designed to remain in a closed position during normal operations and open only when the internal pressure, or another relevant parameter, exceeds the device threshold setting applicable to the equipment as determined by the owner or operator based on manufacturer recommendations, applicable regulations, fire protection and prevention codes, standard engineering codes and practices, or other requirements for the safe handling of flammable, combustible, explosive, reactive, or hazardous materials.

Separator means a remediation material management unit, generally a tank, used to separate oil or organics from water. A separator consists of not only the separation unit but also the forebay and other separator basins, skimmers, weirs, grit chambers, sludge hoppers, and bar screens that are located directly after the individual drain system and prior to any additional treatment units such as an air flotation unit clarifier or biological treatment unit. Examples of a separator include, but are not limited to, an API separator, parallel-plate interceptor, and corrugated-plate interceptor with the associated ancillary equipment.

Site remediation means one or more activities or processes used to remove, destroy, degrade, transform, immobilize, or otherwise manage remediation material. The monitoring or measuring of contamination levels in environmental media using wells or by sampling is not considered to be a site remediation.

Sludge means sludge as defined in §260.10 of this chapter.

Soil means unconsolidated earth material composing the superficial geologic strata (material overlying bedrock), consisting of clay, silt, sand, or gravel size particles (sizes as classified by the U.S. Soil Conservation Service), or a mixture of such materials with liquids, sludges, or solids which is inseparable by simple mechanical removal processes and is made up primarily of soil.

Stabilization process means any physical or chemical process used to either reduce the mobility of contaminants in media or eliminate free liquids as determined by Test Method 9095—Paint Filter Liquids Test in “Test Methods for Evaluating Solid Waste, Physical/Chemical Methods,” EPA Publication No. SW–846, Third Edition, September 1986, as amended by Update I, November 15, 1992. (As an alternative, you may use any more recent, updated version of Method 9095 approved by the EPA). A stabilization process includes mixing remediation material with binders or other materials, and curing the resulting remediation material and binder mixture. Other synonymous terms used to refer to this process are fixation or solidification. A stabilization process does not include the adding of absorbent materials to the surface of remediation material, without mixing, agitation, or subsequent curing, to absorb free liquid.

Surface impoundment means a unit that is a natural topographical depression, man-made excavation, or diked area formed primarily of earthen materials (although it may be lined with man-made materials), which is designed to hold an accumulation of liquids. Examples of surface impoundments include holding, storage, settling, and aeration pits, ponds, and lagoons.

Tank means a stationary unit that is constructed primarily of nonearthen materials (such as wood, concrete, steel, fiberglass, or plastic) which provide structural support and is designed to hold an accumulation of liquids or other materials.

Temperature monitoring device means a piece of equipment used to monitor temperature and having an accuracy of ±1 percent of the temperature being monitored expressed in degrees Celsius (°C) or ±1.2 degrees °C, whichever value is greater.

Transfer system means a stationary system for which the predominant function is to convey liquids or solid materials from one point to another point within a waste management operation or recovery operation. For the purpose of this subpart, the conveyance of material using a container (as defined for this subpart) or a self-propelled vehicle (*e.g.* , a front-end loader) is not a transfer system. Examples of a transfer system include but are not limited to a pipeline, an individual drain system, a gravity-operated conveyor (such as a chute), and a mechanically-powered conveyor (such as a belt or screw conveyor).

Treatment process means a process in which remediation material is physically, chemically, thermally, or biologically treated to destroy, degrade, or remove hazardous air pollutants contained in the material. A treatment process can be

composed of a single unit (*e.g.,* a steam stripper) or a series of units (*e.g.,* a wastewater treatment system). A treatment process can be used to treat one or more remediation material streams at the same time.

Volatile organic hazardous air pollutant (VOHAP) concentration means the fraction by weight of the HAP listed in Table 1 of this subpart that are contained in the remediation material as measured using Method 305, 40 CFR part 63, appendix A and expressed in terms of parts per million (ppm). As an alternative to using Method 305, 40 CFR part 63, appendix A, you may determine the HAP concentration of the remediation material using any one of the other test methods specified in §63.694(b)(2)(ii). When a test method specified in §63.694(b)(2)(ii) other than Method 305 in 40 CFR part 63, appendix A is used to determine the speciated HAP concentration of the contaminated material, the individual compound concentration may be adjusted by the corresponding f_{m305}listed in Table 1 of this subpart to determine a VOHAP concentration.

Work practice standard means any design, equipment, work practice, or operational standard, or combination thereof, that is promulgated pursuant to section 112(h) of the CAA.

[68 FR 58190, Oct. 8, 2003, as amended at 71 FR 69019, Nov. 29, 2006]

Table 1 to Subpart GGGGG of Part 63—List of Hazardous Air Pollutants

CAS No.[a]	Compound name	F_{m305}
75070	Acetaldehyde	1.000
75058	Acetonitrile	0.989
98862	Acetophenone	0.314
98862	Acetophenone	0.314
107028	Acrolein	1.000
107131	Acrylonitrile	0.999
107051	Allyl chloride	1.000
71432	Benzene (includes benzene in gasoline)	1.000
98077	Benzotrichloride (isomers and mixture)	0.958
100447	Benzyl chloride	1.000
92524	Biphenyl	0.864
542881	Bis(chloromethyl)ether[b]	0.999
75252	Bromoform	0.998
106990	1,3-Butadiene	1.000
75150	Carbon disulfide	1.000
56235	Carbon Tetrachloride	1.000
43581	Carbonyl sulfide	1.000
133904	Chloramben	0.633

108907	Chlorobenzene	1.000
67663	Chloroform	1.000
107302	Chloromethyl methyl ether[b]	1.000
126998	Chloroprene	1.000
98828	Cumene	1.000
94757	2,4-D, salts and esters	0.167
334883	Diazomethane[c]	0.999
132649	Dibenzofurans	0.967
96128	B1,2-Dibromo-3-chloropropane	1.000
106467	1,4-Dichlorobenzene(p)	1.000
107062	Dichloroethane (Ethylene dichloride)	1.000
111444	Dichloroethyl ether (Bis(2-chloroethylether)	0.757
542756	1,3-Dichloropropene	1.000
64675	Diethyl sulfate	0.0025
79447	Dimethyl carbamoyl chloride[c]	0.150
77781	Dimethyl sulfate	0.086
121697	N,N-Dimethylaniline	0.0008
51285	2,4-Dinitrophenol	0.0077
121142	2,4-Dinitrotoluene	0.0848
123911	1,4-Dioxane (1,4-Diethyleneoxide)	0.869
106898	Epichlorohydrin (1-Chloro-2,3-epoxypropane)	0.939
106887	1,2-Epoxybutane	1.000
140885	Ethyl acrylate	1.000
100414	Ethyl benzene	1.000
75003	Ethyl chloride (Chloroethane)	1.000
106934	Ethylene dibromide (Dibromoethane)	0.999
107062	Ethylene dichloride (1,2-Dichloroethane)	1.000
151564	Ethylene imine (Aziridine)	0.867
75218	Ethylene oxide	1.000
75343	Ethylidene dichloride (1,1-Dichloroethane)	1.000

	Glycol ethers[d] that have a Henry's Law Constant value equal to or greater than 0.01 Y/X(1.8×10^{-6} atm/gm-mole/m^3) at 25 °C	[e]
118741	Hexachlorobenzene	0.97
87683	Hexachlorobutadiene	0.88
67721	Hexachloroethane	0.499
110543	Hexane	1.000
78591	Isophorone	0.506
58899	Lindane (all isomers)	1.000
67561	Methanol	0.855
74839	Methyl bromide (Bromomethane)	1.000
74873	Methyl chloride (Choromethane)	1.000
71556	Methyl chloroform (1,1,1-Trichloroethane)	1.000
74884	Methyl iodide (Iodomethane)	1.000
108101	Methyl isobutyl ketone (Hexone)	0.979
624839	Methyl isocyanate	1.000
80626	Methyl methacrylate	0.999
1634044	Methyl tert butyl ether	1.000
75092	Methylene chloride (Dichloromethane)	1.000
91203	Naphthalene	0.994
98953	Nitrobenzene	0.394
79469	2-Nitropropane	0.989
82688	Pentachloronitrobenzene (Quintobenzene)	0.839
87865	Pentachlorophenol	0.0898
75445	Phosgene[c]	1.000
123386	Propionaldehyde	0.999
78875	Propylene dichloride (1,2-Dichloropropane)	1.000
75569	Propylene oxide	1.000
75558	1,2-Propylenimine (2-Methyl aziridine)	0.945
100425	Styrene	1.000
96093	Styrene oxide	0.830

79345	1,1,2,2-Tetrachloroethane	0.999
127184	Tetrachloroethylene (Perchloroethylene)	1.000
108883	Toluene	1.000
95534	o-Toluidine	0.152
120821	1,2,4-Trichlorobenzene	1.000
71556	1,1,1-Trichloroethane (Methyl chlorform)	1.000
79005	1,1,2-Trichloroethane (Vinyltrichloride)	1.000
79016	Trichloroethylene	1.000
95954	2,4,5-Trichlorophenol	0.0108
88062	2,4,6-Trichlorophenol	0.0132
121448	Triethylamine	1.000
540841	2,2,4-Trimethylpentane	1.000
108054	Vinyl acetate	1.000
593602	Vinyl bromide	1.000
75014	Vinyl chloride	1.000
75354	Vinylidene chloride (1,1-Dichloroethylene)	1.000
1330207	Xylenes (isomers and mixture)	1.000
95476	o-Xylenes	1.000
108383	m-Xylenes	1.000
106423	p-Xylenes	1.000

Notes:

F_{m305}Fraction measure factor in Method 305, 40 CFR 305 part 63, appendix A.

[a]CAS numbers refer to the Chemical Abstracts Services registry number assigned to specific compounds, isomers, or mixtures of compounds.

[b]Denotes a HAP that hydrolyzes quickly in water, but the hydrolysis products are also HAP chemicals.

[c]Denotes a HAP that may react violently with water.

[d]Denotes a HAP that hydrolyzes slowly in water.

[e]The F_{m305}factors for some of the more common glycol 305 ethers can be obtained by contacting the Waste and Chemical Processes Group, Office of Air Quality Planning and Standards, Research Triangle Park, NC 27711.

[71 FR 69020, Nov. 29, 2006]

Table 2 to Subpart GGGGG of Part 63—Control Levels as Required by §63.7895(a) for Tanks Managing Remediation Material With a Maximum HAP Vapor Pressure Less Than 76.6kPa

If your tank design capacity is . . .	And the maximum HAP vapor pressure of the remediation material placed in your tank is . . .	Then your tank must use . . .
1. Less than 38 m^3	Less than 76.6 kPa	Tank Level 1 controls under §63.7895(b).
2. At least 38 m^3but less than 151 m^3	Less than 13.1 kPa	Tank Level 1 controls under §63.7895(b).
3. 151 m^3or greater	Less than 0.7 kPa	Tank Level 1 controls under §63.7895(b).
4. at least 38 m^3but less than 151 m^3	13.1 kPa or greater	Tank Level 2 controls under §63.7895(c).
5. 151 m^3or greater	0.7 kPa or greater	Tank Level 2 controls under §63.7895(c)

Table 3 to Subpart GGGGG of Part 63—Applicability of General Provisions to Subpart GGGGG

As stated in §63.7940, you must comply with the applicable General Provisions requirements according to the following table:

Citation	Subject	Brief description	Applies to subpart GGGGG
§63.1	Applicability	Initial Applicability Determination; Applicability After Standard Established; Permit Requirements; Extensions, Notifications	Yes.
§63.2	Definitions	Definitions for part 63 standards	Yes.
§63.3	Units and Abbreviations	Units and abbreviations for part 63 standards	Yes.
§63.4	Prohibited Activities	Prohibited Activities; Compliance date; Circumvention, Severability	Yes.
§63.5	Construction/Reconstruction	Applicability; applications; approvals	Yes.

§63.6(a)	Applicability	General Provisions (GP) apply unless compliance extension GP apply to area sources that become major	Yes.
§63.6(b)(1)–(4)	Compliance Dates for New and Reconstructed sources	Standards apply at effective date; 3 years after effective date; upon startup; 10 years after construction or reconstruction commences for 112(f)	Yes.
§63.6(b)(5)	Notification	Must notify if commenced construction or reconstruction after proposal	Yes.
§63.6(b)(6)	[Reserved]		
§63.6(b)(7)	Compliance Dates for New and Reconstructed Area Sources That Become Major	Area sources that become major must comply with major source standards immediately upon becoming major, regardless of whether required to comply when they were an area source	Yes.
§63.6(c)(1)–(2)	Compliance Dates for Existing Sources	Comply according to date in subpart, which must be no later than 3 years after effective date. For 112(f) standards, comply within 90 days of effective date unless compliance extension	Yes.
§63.6(c)(3)–(4)	[Reserved]		
§63.6(c)(5)	Compliance Dates for Existing Area Sources That Become Major	Area sources that become major must comply with major source standards by date indicated in subpart or by equivalent time period (for example, 3 years)	Yes.
§63.6(d)	[Reserved]		
§63.6(e)(1)–(2)	Operation & Maintenance	Operate to minimize emissions at all times. Correct malfunctions as soon as practicable. Operation and maintenance requirements	Yes.

		independently enforceable; information Administrator will use to determine if operation and maintenance requirements were met	
§63.6(e)(3)	Startup, Shutdown, and Malfunction Plan (SSMP)	Requirement for startup, shutdown and malfunction (SSM) and SSMP. Content of SSMP	Yes with the exception of containers using either Level 1 or Level 2 controls.
§63.6(f)(1)	Compliance Except During SSM	You must comply with emissions standards at all times except during SSM	Yes.
§63.6(f)(2)–(3)	Methods for Determining Compliance	Compliance based on performance test, operation and maintenance plans, records, inspection	Yes.
§63.6(g)(1)–(3)	Alternative Standard	Procedures for getting an alternative standard	Yes.
§63.6(h)	Opacity/Visible Emissions (VE) Standards	Requirements for opacity and visible emissions limits	No. No opacity standards.
§63.6(i)(1)–(14)	Compliance Extension	Procedures and criteria for Administrator to grant compliance extension	Yes.
§63.6(j)	Presidential Compliance Exemption	President may exempt source category from requirement to comply with final rule	Yes.
§63.7(a)(1)–(2)	Performance Test Dates	Dates for Conducting Initial Performance Testing and Other Compliance Demonstrations. Must conduct 180 days after first subject to final rule	Yes.
§63.7(a)(3)	CAA Section 114 Authority	Administrator may require a performance test under CAA section 114 at any time	Yes.
§63.7(b)(1)	Notification of Performance Test	Must notify Administrator 60 days before the test	Yes.
§63.7(b)(2)	Notification of Rescheduling	If rescheduling a performance	Yes.

		test is necessary, must notify Administrator 5 days before scheduled date of rescheduled date	
§63.7(c)	Quality Assurance/Test Plan	Requirement to submit site-specific test plan 60 days before the test or on date Administrator agrees with: Test plan approval procedures; performance audit requirements; internal and external QA procedures for testing	Yes.
§63.7(d)	Testing Facilities	Requirements for testing facilities	Yes.
§63.7(e)(1)	Conditions for Conducting Performance Tests	Performance tests must be conducted under representative conditions. Cannot conduct performance tests during SSM. Not a violation to exceed standard during SSM	Yes.
§63.7(e)(2)	Conditions for Conducting Performance Tests	Must conduct according to rule and EPA test methods unless Administrator approves alternative	Yes.
§63.7(e)(3)	Test Run Duration	Must have three test runs of at least one hour each. Compliance is based on arithmetic mean of three runs. Conditions when data from an additional test run can be used	Yes.
§63.7(f)	Alternative Test Method	Procedures by which Administrator can grant approval to use an alternative test method	Yes.
§63.7(g)	Performance Test Data Analysis	Must include raw data in performance test report. Must submit performance test data 60 days after end of test with the Notification of Compliance Status. Keep data	Yes.

		for 5 years	
§63.7(h)	Waiver of Tests	Procedures for Administrator to waive performance test	Yes.
§63.8(a)(1)	Applicability of Monitoring Requirements	Subject to all monitoring requirements in standard	Yes.
§63.8(a)(2)	Performance Specifications	Performance Specifications in appendix B of part 60 apply	Yes.
§63.8(a)(3)	[Reserved]		
§63.8(a)(4)	Monitoring with Flares	Unless your rule says otherwise, the requirements for flares in 63.11 apply	Yes.
§63.8(b)(1)	Monitoring	Must conduct monitoring according to standard unless Administrator approves alternative	Yes.
§63.8(b)(2)–(3)	Multiple Effluents and Multiple Monitoring Systems	Specific requirements for installing monitoring systems. Must install on each effluent before it is combined and before it is released to the atmosphere unless Administrator approves otherwise. If more than one monitoring system on an emissions point, must report all monitoring system results, unless one monitoring system is a backup	Yes.
§63.8(c)(1)	Monitoring System Operation and Maintenance	Maintain monitoring system in a manner consistent with good air pollution control practices	Yes.
§63.8(c)(1)(i)	Routine and Predictable SSM	Keep parts for routine repairs available; reporting requirements for SSM when action is described in SSM plan	Yes.
§63.8(c)(1)(ii)	SSM not in SSMP	Reporting requirements for SSM when action is not described in SSM plan	Yes.
§63.8(c)(1)(iii)	Compliance with Operation	How Administrator	Yes.

	and Maintenance (O&M) Requirements	determines if source complying with operation and maintenance requirements. Review of source O&M procedures, records, Manufacturer's instructions, recommendations, and inspection of monitoring system	
§63.8(c)(2)–(3)	Monitoring System Installation	Must install to get representative emissions and parameter measurements. Must verify operational status before or at performance test	Yes.
§63.8(c)(4)	Continuous Monitoring System (CMS) Requirements	CMS must be operating except during breakdown, out-of-control, repair, maintenance, and high-level calibration drifts	No.
§63.8(c)(4)(i)–(ii)	Continuous Monitoring System (CMS) Requirements	COMS must have a minimum of one cycle of sampling and analysis for each successive 10-second period and one cycle of data recording for each successive 6-minute period. CEMS must have a minimum of one cycle of operation for each successive 15-minute period	Yes. However, COMS are not applicable. Requirements for CPMS are listed in §§63.7900 and 63.7913.
§63.8(c)(5)	COMS Minimum Procedures	COMS minimum procedures	No.
§63.8(c)(6)	CMS Requirements	Zero and High level calibration check requirements	Yes. However requirements for CPMS are addressed in §63.7927.
§63.8(c)(7)–(8)	CMS Requirements	Out-of-control periods, including reporting	Yes.
§63.8(d)	CMS Quality Control	Requirements for CMS quality control, including calibration, etc. Must keep quality control plan on record for 5 years.	Yes.

		Keep old versions for 5 years after revisions	
§63.8(e)	CMS Performance Evaluation	Notification, performance evaluation test plan, reports	Yes.
§63.8(f)(1)–(5)	Alternative Monitoring Method	Procedures for Administrator to approve alternative monitoring	Yes.
§63.8(f)(6)	Alternative to Relative Accuracy Test	Procedures for Administrator to approve alternative relative accuracy tests for CEMS	No.
§63.8(g)(1)–(4)	Data Reduction	COMS 6-minute averages calculated over at least 36 evenly spaced data points. CEMS 1-hour averages computed over at least four equally spaced data points	Yes. However, COMS are not applicable. Requirements for CPMS are addressed in §§63.7900 and 63.7913.
§63.8(g)(5)	Data Reduction	Data that cannot be used in computing averages for CEMS and COMS	No.
§63.9(a)	Notification Requirements	Applicability and State Delegation	Yes.
§63.9(b)(1)–(5)	Initial Notifications.	Submit notification 120 days after effective date. Notification of intent to construct/reconstruct; Notification of commencement of construct/reconstruct; Notification of startup. Contents of each	Yes.
§63.9(c)	Request for Compliance Extension	Can request if cannot comply by date or if installed BACT/LAER	Yes.
§63.9(d)	Notification of Special Compliance Requirements for New Source	For sources that commence construction between proposal and promulgation and want to comply 3 years after effective date	Yes.

§63.9(e)	Notification of Performance Test	Notify Administrator 60 days prior	Yes.
§63.9(f)	Notification of VE/Opacity Test	Notify Administrator 30 days prior	No.
§63.9(g)	Additional Notifications When Using CMS	Notification of performance evaluation. Notification using COMS data. Notification that exceeded criterion for relative accuracy	Yes. However, there are no opacity standards.
§63.9(h)(1)–(6)	Notification of Compliance Status	Contents. Due 60 days after end of performance test or other compliance demonstration, except for opacity/VE, which are due 30 days after. When to submit to Federal vs. State authority	Yes.
§63.9(i)	Adjustment of Submittal Deadlines	Procedures for Administrator to approve change in when notifications must be submitted	Yes.
§63.9(j)	Change in Previous Information	Must submit within 15 days after the change	Yes.
§63.10(a)	Recordkeeping/Reporting	Applies to all, unless compliance extension. When to submit to Federal vs. State authority. Procedures for owners of more than 1 source	Yes.
§63.10(b)(1)	Recordkeeping/Reporting	General Requirements. Keep all records readily available. Keep for 5 years	Yes.
§63.10(b)(2)(i)–(iv)	Records related to SSM	Occurrence of each of operation (process equipment). Occurrence of each malfunction of air pollution equipment. Maintenance on air pollution control equipment. Actions during startup, shutdown, and malfunction	Yes.
§63.10(b)(2)(vi) and (x–xi)	CMS Records	Malfunctions, inoperative, out-of-control. Calibration	Yes.

		checks. Adjustments, maintenance	
§63.10(b)(2)(vii)–(ix)	Records	Measurements to demonstrate compliance with emissions limitations. Performance test, performance evaluation, and visible emissions observation results. Measurements to determine conditions of performance tests and performance evaluations	Yes.
§63.10(b)(2)(xii)	Records	Records when under waiver	Yes.
§63.10(b)(2)(xiii)	Records	Records when using alternative to relative accuracy test	No.
§63.10(b)(2)(xiv)	Records	All documentation supporting Initial Notification and Notification of Compliance Status	Yes.
§63.10(b)(3)	Records	Applicability Determinations	Yes.
§63.10(c)	Records	Additional Records for CMS	No.
§63.10(d)(1)	General Reporting Requirements	Requirement to report	Yes.
§63.10(d)(2)	Report of Performance Test Results	When to submit to Federal or State authority	Yes.
§63.10(d)(3)	Reporting Opacity or VE Observations	What to report and when	No.
§63.10(d)(4)	Progress Reports	Must submit progress reports on schedule if under compliance extension	Yes.
§63.10(d)(5)	Startup, Shutdown, and Malfunction Reports	Contents and submission	Yes.
§63.10(e)(1)–(2)	Additional CMS Reports	Must report results for each CEM on a unit Written copy of performance evaluation Three copies of COMS performance evaluation	Yes. However, COMS are not applicable.
§63.10(e)(3)	Reports	Excess Emissions Reports	No.

§63.10(e)(3)(i–iii)	Reports	Schedule for reporting excess emissions and parameter monitor exceedance (now defined as deviations)	No.
§63.10(e)(3)(iv–v)	Excess Emissions Reports	Requirement to revert to quarterly submission if there is an excess emissions and parameter monitor exceedance (now defined as deviations). Provision to request semiannual reporting after compliance for one year. Submit report by 30th day following end of quarter or calendar half. If there has not been an exceedance or excess emissions (now defined as deviations), report contents is a statement that there have been no deviations	No.
§63.10(e)(3)(iv–v)	Excess Emissions Reports	Must submit report containing all of the information in §§63.10(c)(5–13) and 63.8(c)(7–8)	No.
§63.10(e)(3)(vi–viii)	Excess Emissions Report and Summary Report	Requirements for reporting excess emissions for CMSs (now called deviations). Requires all of the information in §§63.10(c)(5–13) and 63.8(c)(7–8)	No.
§63.10(e)(4)	Reporting COMS data	Must submit COMS data with performance test data	No.
§63.10(f)	Waiver for Recordkeeping/Reporting	Procedures for Administrator to waive	Yes.
§63.11	Control and work practice requirements	Requirements for flares and alternative work practice for equipment leaks	Yes.
§63.12	Delegation	State authority to enforce standards	Yes.
§63.13	Addresses	Addresses where reports, notifications, and requests are sent	Yes.

§63.14	Incorporation by Reference	Test methods incorporated by reference	Yes.
§63.15	Availability of Information	Public and confidential information	Yes

[68 FR 58190, Oct. 8, 2003, as amended at 71 FR 20468, Apr. 20, 2006; 71 FR 69021, Nov. 29, 2006; 73 FR 78216, Dec. 22, 2008]

Attachment F
to a Part 70 Operating Permit

40 CFR 61, Subpart FF— National Emission Standards for Benzene Waste Operations

Source Background and Description

Source Name:	Eli Lilly and Company, Lilly Technology Center
Source Location:	1555 South Harding Street, Indianapolis, IN 46168
County:	Marion
SIC Code:	2833, 2834
Permit Renewal No.:	T097-30149-00072
Permit Reviewer:	Josiah Balogun

The following is believed to be the correct text of the sections cited. However, in the event there is any discrepancy between this material and that of these regulatory sections as they appear in the Code of Federal Regulations, July 1, 2011 edition (the CFR), as adopted by reference by IDEM at 326 IAC 1-1-3, the language of the CFR shall govern.

Section E.6 of the permit identifies the applicable sections of this rule

Subpart FF—National Emission Standard for Benzene Waste Operations

Source: 55 FR 8346, Mar. 7, 1990, unless otherwise noted.

§ 61.340 Applicability.

(a) The provisions of this subpart apply to owners and operators of chemical manufacturing plants, coke by-product recovery plants, and petroleum refineries.

(b) The provisions of this subpart apply to owners and operators of hazardous waste treatment, storage, and disposal facilities that treat, store, or dispose of hazardous waste generated by any facility listed in paragraph (a) of this section. The waste streams at hazardous waste treatment, storage, and disposal facilities subject to the provisions of this subpart are the benzene-containing hazardous waste from any facility listed in paragraph (a) of this section. A hazardous waste treatment, storage, and disposal facility is a facility that must obtain a hazardous waste management permit under subtitle C of the Solid Waste Disposal Act.

(c) At each facility identified in paragraph (a) or (b) of this section, the following waste is exempt from the requirements of this subpart:

(1) Waste in the form of gases or vapors that is emitted from process fluids:

(2) Waste that is contained in a segregated stormwater sewer system.

(d) At each facility identified in paragraph (a) or (b) of this section, any gaseous stream from a waste management unit, treatment process, or wastewater treatment system routed to a fuel gas system, as defined in §61.341, is exempt from this subpart. No testing, monitoring, recordkeeping, or reporting is required under this subpart for any gaseous stream from a waste management unit, treatment process, or wastewater treatment unit routed to a fuel gas system.

[55 FR 8346, Mar. 7, 1990, as amended at 55 FR 37231, Sept. 10, 1990; 58 FR 3095, Jan. 7, 1993; 67 FR 68531, Nov. 12, 2002]

§ 61.341 Definitions.

Benzene concentration means the fraction by weight of benzene in a waste as determined in accordance with the procedures specified in §61.355 of this subpart.

Car-seal means a seal that is placed on a device that is used to change the position of a valve (e.g., from opened to closed) in such a way that the position of the valve cannot be changed without breaking the seal.

Chemical manufacturing plant means any facility engaged in the production of chemicals by chemical, thermal, physical, or biological processes for use as a product, co-product, by-product, or intermediate including but not limited to industrial organic chemicals, organic pesticide products, pharmaceutical preparations, paint and allied products, fertilizers, and agricultural chemicals. Examples of chemical manufacturing plants include facilities at which process units are operated to produce one or more of the following chemicals: benzenesulfonic acid, benzene, chlorobenzene, cumene, cyclohexane, ethylene, ethylbenzene, hydroquinone, linear alklylbenzene, nitrobenzene, resorcinol, sulfolane, or styrene.

Closed-vent system means a system that is not open to the atmosphere and is composed of piping, ductwork, connections, and, if necessary, flow inducing devices that transport gas or vapor from an emission source to a control device.

Coke by-product recovery plant means any facility designed and operated for the separation and recovery of coal tar derivatives (by-products) evolved from coal during the coking process of a coke oven battery.

Container means any portable waste management unit in which a material is stored, transported, treated, or otherwise handled. Examples of containers are drums, barrels, tank trucks, barges, dumpsters, tank cars, dump trucks, and ships.

Control device means an enclosed combustion device, vapor recovery system, or flare.

Cover means a device or system which is placed on or over a waste placed in a waste management unit so that the entire waste surface area is enclosed and sealed to minimize air emissions. A cover may have openings necessary for operation, inspection, and maintenance of the waste management unit such as access hatches, sampling ports, and gauge wells provided that each opening is closed and sealed when not in use. Example of covers include a fixed roof installed on a tank, a lid installed on a container, and an air-supported enclosure installed over a waste management unit.

External floating roof means a pontoon-type or double-deck type cover with certain rim sealing mechanisms that rests on the liquid surface in a waste management unit with no fixed roof.

Facility means all process units and product tanks that generate waste within a stationary source, and all waste management units that are used for waste treatment, storage, or disposal within a stationary source.

Fixed roof means a cover that is mounted on a waste management unit in a stationary manner and that does not move with fluctuations in liquid level.

Floating roof means a cover with certain rim sealing mechanisms consisting of a double deck, pontoon single deck, internal floating cover or covered floating roof, which rests upon and is supported by the liquid being contained, and is equipped with a closure seal or seals to close the space between the roof edge and unit wall.

Flow indicator means a device which indicates whether gas flow is present in a line or vent system.

Fuel gas system means the offsite and onsite piping and control system that gathers gaseous streams generated by facility operations, may blend them with sources of gas, if available, and transports the blended gaseous fuel at

suitable pressures for use as fuel in heaters, furnaces, boilers, incinerators, gas turbines, and other combustion devices located within or outside the facility. The fuel is piped directly to each individual combustion device, and the system typically operates at pressures over atmospheric.

Individual drain system means the system used to convey waste from a process unit, product storage tank, or waste management unit to a waste management unit. The term includes all process drains and common junction boxes, together with their associated sewer lines and other junction boxes, down to the receiving waste management unit.

Internal floating roof means a cover that rests or floats on the liquid surface inside a waste management unit that has a fixed roof.

Liquid-mounted seal means a foam or liquid-filled primary seal mounted in contact with the liquid between the waste management unit wall and the floating roof continuously around the circumference.

Loading means the introduction of waste into a waste management unit but not necessarily to complete capacity (also referred to as filling).

Maximum organic vapor pressure means the equilibrium partial pressure exerted by the waste at the temperature equal to the highest calendar-month average of the waste storage temperature for waste stored above or below the ambient temperature or at the local maximum monthly average temperature as reported by the National Weather Service for waste stored at the ambient temperature, as determined:

(1) In accordance with §60.17(c); or

(2) As obtained from standard reference texts; or

(3) In accordance with §60.17(a)(37); or

(4) Any other method approved by the Administrator.

No detectable emissions means less than 500 parts per million by volume (ppmv) above background levels, as measured by a detection instrument reading in accordance with the procedures specified in §61.355(h) of this subpart.

Oil-water separator means a waste management unit, generally a tank or surface impoundment, used to separate oil from water. An oil-water separator consists of not only the separation unit but also the forebay and other separator basins, skimmers, weirs, grit chambers, sludge hoppers, and bar screens that are located directly after the individual drain system and prior to additional treatment units such as an air flotation unit, clarifier, or biological treatment unit. Examples of an oil-water separator incude an API separator, parallel-plate interceptor, and corrugated-plate interceptor with the associated ancillary equipment.

Petroleum refinery means any facility engaged in producing gasoline, kerosene, distillate fuel oils, residual fuel oils, lubricants, or other products through the distillation of petroleum, or through the redistillation, cracking, or reforming of unfinished petroleum derivatives.

Petroleum means the crude oil removed from the earth and the oils derived from tar sands, shale, and coal.

Point of waste generation means the location where the waste stream exits the process unit component or storage tank prior to handling or treatment in an operation that is not an integral part of the production process, or in the case of waste management units that generate new wastes after treatment, the location where the waste stream exits the waste management unit component.

Process unit means equipment assembled and connected by pipes or ducts to produce intermediate or final products. A process unit can be operated independently if supplied with sufficient fuel or raw materials and sufficient product storage facilities.

Process unit turnaround means the shutting down of the operations of a process unit, the purging of the contents of the process unit, the maintenance or repair work, followed by restarting of the process.

Process unit turnaround waste means a waste that is generated as a result of a process unit turnaround.

Process wastewater means water which comes in contact with benzene during manufacturing or processing operations conducted within a process unit. Process wastewater is not organic wastes, process fluids, product tank drawdown, cooling tower blowdown, steam trap condensate, or landfill leachate.

Process wastewater stream means a waste stream that contains only process wastewater.

Product tank means a stationary unit that is designed to contain an accumulation of materials that are fed to or produced by a process unit, and is constructed primarily of non-earthen materials (e.g., wood, concrete, steel, plastic) which provide structural support.

Product tank drawdown means any material or mixture of materials discharged from a product tank for the purpose of removing water or other contaminants from the product tank.

Safety device means a closure device such as a pressure relief valve, frangible disc, fusible plug, or any other type of device which functions exclusively to prevent physical damage or permanent deformation to a unit or its air emission control equipment by venting gases or vapors directly to the atmosphere during unsafe conditions resulting from an unplanned, accidental, or emergency event. For the purpose of this subpart, a safety device is not used for routine venting of gases or vapors from the vapor headspace underneath a cover such as during filling of the unit or to adjust the pressure in this vapor headspace in response to normal daily diurnal ambient temperature fluctuations. A safety device is designed to remain in a closed position during normal operations and open only when the internal pressure, or another relevant parameter, exceeds the device threshold setting applicable to the air emission control equipment as determined by the owner or operator based on manufacturer recommendations, applicable regulations, fire protection and prevention codes, standard engineering codes and practices, or other requirements for the safe handling of flammable, ignitable, explosive, reactive, or hazardous materials.

Segregated stormwater sewer system means a drain and collection system designed and operated for the sole purpose of collecting rainfall runoff at a facility, and which is segregated from all other individual drain systems.

Sewer line means a lateral, trunk line, branch line, or other enclosed conduit used to convey waste to a downstream waste management unit.

Slop oil means the floating oil and solids that accumulate on the surface of an oil-water separator.

Sour water stream means a stream that:

(1) Contains ammonia or sulfur compounds (usually hydrogen sulfide) at concentrations of 10 ppm by weight or more;

(2) Is generated from separation of water from a feed stock, intermediate, or product that contained ammonia or sulfur compounds; and

(3) Requires treatment to remove the ammonia or sulfur compounds.

Sour water stripper means a unit that:

(1) Is designed and operated to remove ammonia or sulfur compounds (usually hydrogen sulfide) from sour water streams;

(2) Has the sour water streams transferred to the stripper through hard piping or other enclosed system; and

(3) Is operated in such a manner that the offgases are sent to a sulfur recovery unit, processing unit, incinerator, flare, or other combustion device.

Surface impoundment means a waste management unit which is a natural topographic depression, man-made excavation, or diked area formed primarily of earthen materials (although it may be lined with man-made materials), which is designed to hold an accumulation of liquid wastes or waste containing free liquids, and which is not an injection well. Examples of surface impoundments are holding, storage, settling, and aeration pits, ponds, and lagoons.

Tank means a stationary waste management unit that is designed to contain an accumulation of waste and is constructed primarily of nonearthen materials (e.g., wood, concrete, steel, plastic) which provide structural support.

Treatment process means a stream stripping unit, thin-film evaporation unit, waste incinerator, or any other process used to comply with §61.348 of this subpart.

Vapor-mounted seal means a foam-filled primary seal mounted continuously around the perimeter of a waste management unit so there is an annular vapor space underneath the seal. The annular vapor space is bounded by the bottom of the primary seal, the unit wall, the liquid surface, and the floating roof.

Waste means any material resulting from industrial, commercial, mining or agricultural operations, or from community activities that is discarded or is being accumulated, stored, or physically, chemically, thermally, or biologically treated prior to being discarded, recycled, or discharged.

Waste management unit means a piece of equipment, structure, or transport mechanism used in handling, storage, treatment, or disposal of waste. Examples of a waste management unit include a tank, surface impoundment, container, oil-water separator, individual drain system, steam stripping unit, thin-film evaporation unit, waste incinerator, and landfill.

Waste stream means the waste generated by a particular process unit, product tank, or waste management unit. The characteristics of the waste stream (e.g., flow rate, benzene concentration, water content) are determined at the point of waste generation. Examples of a waste stream include process wastewater, product tank drawdown, sludge and slop oil removed from waste management units, and landfill leachate.

Wastewater treatment system means any component, piece of equipment, or installation that receives, manages, or treats process wastewater, product tank drawdown, or landfill leachate prior to direct or indirect discharge in accordance with the National Pollutant Discharge Elimination System permit regulations under 40 CFR part 122. These systems typically include individual drain systems, oil-water separators, air flotation units, equalization tanks, and biological treatment units.

Water seal controls means a seal pot, p-leg trap, or other type of trap filled with water (e.g., flooded sewers that maintain water levels adequate to prevent air flow through the system) that creates a water barrier between the sewer line and the atmosphere. The water level of the seal must be maintained in the vertical leg of a drain in order to be considered a water seal.

[55 FR 8346, Mar. 7, 1990; 55 FR 12444, Apr. 3, 1990, as amended at 58 FR 3095, Jan. 7, 1993; 67 FR 68531, Nov. 12, 2002]

§ 61.342 Standards: General.

(a) An owner or operator of a facility at which the total annual benzene quantity from facility waste is less than 10 megagrams per year (Mg/yr) (11 ton/yr) shall be exempt from the requirements of paragraphs (b) and (c) of this section. The total annual benzene quantity from facility waste is the sum of the annual benzene quantity for each waste stream at the facility that has a flow-weighted annual average water content greater than 10 percent or that is mixed with water, or other wastes, at any time and the mixture has an annual average water content greater than 10 percent. The benzene quantity in a waste stream is to be counted only once without multiple counting if other waste streams are mixed with or generated from the original waste stream. Other specific requirements for calculating the total annual benzene waste quantity are as follows:

(1) Wastes that are exempted from control under §§61.342(c)(2) and 61.342(c)(3) are included in the calculation of the total annual benzene quantity if they have an annual average water content greater than 10 percent, or if they are

mixed with water or other wastes at any time and the mixture has an annual average water content greater than 10 percent.

(2) The benzene in a material subject to this subpart that is sold is included in the calculation of the total annual benzene quantity if the material has an annual average water content greater than 10 percent.

(3) Benzene in wastes generated by remediation activities conducted at the facility, such as the excavation of contaminated soil, pumping and treatment of groundwater, and the recovery of product from soil or groundwater, are not included in the calculation of total annual benzene quantity for that facility. If the facility's total annual benzene quantity is 10 Mg/yr (11 ton/yr) or more, wastes generated by remediation activities are subject to the requirements of paragraphs (c) through (h) of this section. If the facility is managing remediation waste generated offsite, the benzene in this waste shall be included in the calculation of total annual benzene quantity in facility waste, if the waste streams have an annual average water content greater than 10 percent, or if they are mixed with water or other wastes at any time and the mixture has an annual average water content greater than 10 percent.

(4) The total annual benzene quantity is determined based upon the quantity of benzene in the waste before any waste treatment occurs to remove the benzene except as specified in §61.355(c)(1)(i) (A) through (C).

(b) Each owner or operator of a facility at which the total annual benzene quantity from facility waste is equal to or greater than 10 Mg/yr (11 ton/yr) as determined in paragraph (a) of this section shall be in compliance with the requirements of paragraphs (c) through (h) of this section no later than 90 days following the effective date, unless a waiver of compliance has been obtained under §61.11, or by the initial startup for a new source with an initial startup after the effective date.

(1) The owner or operator of an existing source unable to comply with the rule within the required time may request a waiver of compliance under §61.10.

(2) As part of the waiver application, the owner or operator shall submit to the Administrator a plan under §61.10(b)(3) that is an enforceable commitment to obtain environmental benefits to mitigate the benzene emissions that result from extending the compliance date. The plan shall include the following information:

(i) A description of the method of compliance, including the control approach, schedule for installing controls, and quantity of the benzene emissions that result from extending the compliance date;

(ii) If the control approach involves a compliance strategy designed to obtain integrated compliance with multiple regulatory requirements, a description of the other regulations involved and their effective dates; and

(iii) A description of the actions to be taken at the facility to obtain mitigating environmental benefits, including how the benefits will be obtained, the schedule for these actions, and an estimate of the quantifiable benefits that directly result from these actions.

(c) Each owner or operator of a facility at which the total annual benzene quantity from facility waste is equal to or greater than 10 Mg/yr (11 ton/yr) as determined in paragraph (a) of this section shall manage and treat the facility waste as follows:

(1) For each waste stream that contains benzene, including (but not limited to) organic waste streams that contain less than 10 percent water and aqueous waste streams, even if the wastes are not discharged to an individual drain system, the owner or operator shall:

(i) Remove or destroy the benzene contained in the waste using a treatment process or wastewater treatment system that complies with the standards specified in §61.348 of this subpart.

(ii) Comply with the standards specified in §§61.343 through 61.347 of this subpart for each waste management unit that receives or manages the waste stream prior to and during treatment of the waste stream in accordance with paragraph (c)(1)(i) of this section.

(iii) Each waste management unit used to manage or treat waste streams that will be recycled to a process shall comply with the standards specified in §§61.343 through 61.347. Once the waste stream is recycled to a process, including to a tank used for the storage of production process feed, product, or product intermediates, unless this tank is used primarily for the storage of wastes, the material is no longer subject to paragraph (c) of this section.

(2) A waste stream is exempt from paragraph (c)(1) of this section provided that the owner or operator demonstrates initially and, thereafter, at least once per year that the flow-weighted annual average benzene concentration for the waste stream is less than 10 ppmw as determined by the procedures specified in §61.355(c)(2) or §61.355(c)(3).

(3) A waste stream is exempt from paragraph (c)(1) of this section provided that the owner or operator demonstrates initially and, thereafter, at least once per year that the conditions specified in either paragraph (c)(3)(i) or (c)(3)(ii) of this section are met.

(i) The waste stream is process wastewater that has a flow rate less than 0.02 liters per minute (0.005 gallons per minute) or an annual wastewater quantity of less than 10 Mg/yr (11 ton/yr); or

(ii) All of the following conditions are met:

(A) The owner or operator does not choose to exempt process wastewater under paragraph (c)(3)(i) of this section,

(B) The total annual benzene quantity in all waste streams chosen for exemption in paragraph (c)(3)(ii) of this section does not exceed 2.0 Mg/yr (2.2 ton/yr) as determined in the procedures in §61.355(j), and

(C) The total annual benzene quantity in a waste stream chosen for exemption, including process unit turnaround waste, is determined for the year in which the waste is generated.

(d) As an alternative to the requirements specified in paragraphs (c) and (e) of this section, an owner or operator of a facility at which the total annual benzene quantity from facility waste is equal to or greater than 10 Mg/yr (11 ton/yr) as determined in paragraph (a) of this section may elect to manage and treat the facility waste as follows:

(1) The owner or operator shall manage and treat facility waste other than process wastewater in accordance with the requirements of paragraph (c)(1) of this section.

(2) The owner or operator shall manage and treat process wastewater in accordance with the following requirements:

(i) Process wastewater shall be treated to achieve a total annual benzene quantity from facility process wastewater less than 1 Mg/yr (1.1 ton/yr). Total annual benzene from facility process wastewater shall be determined by adding together the annual benzene quantity at the point of waste generation for each untreated process wastewater stream plus the annual benzene quantity exiting the treatment process for each process wastewater stream treated in accordance with the requirements of paragraph (c)(1)(i) of this section.

(ii) Each treated process wastewater stream identified in paragraph (d)(2)(i) of this section shall be managed and treated in accordance with paragraph (c)(1) of this section.

(iii) Each untreated process wastewater stream identified in paragraph (d)(2)(i) of this section is exempt from the requirements of paragraph (c)(1) of this section.

(e) As an alternative to the requirements specified in paragraphs (c) and (d) of this section, an owner or operator of a facility at which the total annual benzene quantity from facility waste is equal to or greater than 10 Mg/yr (11 ton/yr) as determined in paragraph (a) of this section may elect to manage and treat the facility waste as follows:

(1) The owner or operator shall manage and treat facility waste with a flow-weighted annual average water content of less than 10 percent in accordance with the requirements of paragraph (c)(1) of this section; and

(2) The owner or operator shall manage and treat facility waste (including remediation and process unit turnaround waste) with a flow-weighted annual average water content of 10 percent or greater, on a volume basis as total water,

and each waste stream that is mixed with water or wastes at any time such that the resulting mixture has an annual water content greater than 10 percent, in accordance with the following:

(i) The benzene quantity for the wastes described in paragraph (e)(2) of this section must be equal to or less than 6.0 Mg/yr (6.6 ton/yr), as determined in §61.355(k). Wastes as described in paragraph (e)(2) of this section that are transferred offsite shall be included in the determination of benzene quantity as provided in §61.355(k). The provisions of paragraph (f) of this section shall not apply to any owner or operator who elects to comply with the provisions of paragraph (e) of this section.

(ii) The determination of benzene quantity for each waste stream defined in paragraph (e)(2) of this section shall be made in accordance with §61.355(k).

(f) Rather than treating the waste onsite, an owner or operator may elect to comply with paragraph (c)(1)(i) of this section by transferring the waste offsite to another facility where the waste is treated in accordance with the requirements of paragraph (c)(1)(i) of this section. The owner or operator transferring the waste shall:

(1) Comply with the standards specified in §§61.343 through 61.347 of this subpart for each waste management unit that receives or manages the waste prior to shipment of the waste offsite.

(2) Include with each offsite waste shipment a notice stating that the waste contains benzene which is required to be managed and treated in accordance with the provisions of this subpart.

(g) Compliance with this subpart will be determined by review of facility records and results from tests and inspections using methods and procedures specified in §61.355 of this subpart.

(h) Permission to use an alternative means of compliance to meet the requirements of §§61.342 through 61.352 of this subpart may be granted by the Administrator as provided in §61.353 of this subpart.

[55 FR 8346, Mar. 7, 1990, as amended at 58 FR 3095, Jan. 7, 1993; 65 FR 62159, 62160, Oct. 17, 2000]

§ 61.343 Standards: Tanks.

(a) Except as provided in paragraph (b) of this section and in §61.351, the owner or operator must meet the standards in paragraph (a)(1) or (2) of this section for each tank in which the waste stream is placed in accordance with §61.342 (c)(1)(ii). The standards in this section apply to the treatment and storage of the waste stream in a tank, including dewatering.

(1) The owner or operator shall install, operate, and maintain a fixed-roof and closed-vent system that routes all organic vapors vented from the tank to a control device.

(i) The fixed-roof shall meet the following requirements:

(A) The cover and all openings (e.g., access hatches, sampling ports, and gauge wells) shall be designed to operate with no detectable emissions as indicated by an instrument reading of less than 500 ppmv above background, as determined initially and thereafter at least once per year by the methods specified in §61.355(h) of this subpart.

(B) Each opening shall be maintained in a closed, sealed position (e.g., covered by a lid that is gasketed and latched) at all times that waste is in the tank except when it is necessary to use the opening for waste sampling or removal, or for equipment inspection, maintenance, or repair.

(C) If the cover and closed-vent system operate such that the tank is maintained at a pressure less than atmospheric pressure, then paragraph (a)(1)(i)(B) of this section does not apply to any opening that meets all of thefollowing conditions:

(*1*) The purpose of the opening is to provide dilution air to reduce the explosion hazard;

(*2*) The opening is designed to operate with no detectable emissions as indicated by an instrument reading of less than 500 ppmv above background, as determined initially and thereafter at least once per year by the methods specified in §61.355(h); and

(*3*) The pressure is monitored continuously to ensure that the pressure in the tank remains below atmospheric pressure.

(ii) The closed-vent system and control device shall be designed and operated in accordance with the requirements of §61.349 of this subpart.

(2) The owner or operator must install, operate, and maintain an enclosure and closed-vent system that routes all organic vapors vented from the tank, located inside the enclosure, to a control device in accordance with the requirements specified in paragraph (e) of this section.

(b) For a tank that meets all the conditions specified in paragraph (b)(1) of this section, the owner or operator may elect to comply with paragraph (b)(2) of this section as an alternative to the requirements specified in paragraph (a)(1) of this section.

(1) The waste managed in the tank complying with paragraph (b)(2) of this section shall meet all of the following conditions:

(i) Each waste stream managed in the tank must have a flow-weighted annual average water content less than or equal to 10 percent water, on a volume basis as total water.

(ii) The waste managed in the tank either:

(A) Has a maximum organic vapor pressure less than 5.2 kilopascals (kPa) (0.75 pounds per square inch (psi));

(B) Has a maximum organic vapor pressure less than 27.6 kPa (4.0 psi) and is managed in a tank having design capacity less than 151 m^3 (40,000 gal); or

(C) Has a maximum organic vapor pressure less than 76.6 kPa (11.1 psi) and is managed in a tank having a design capacity less than 75 m^3 (20,000 gal).

(2) The owner or operator shall install, operate, and maintain a fixed roof as specified in paragraph (a)(1)(i).

(3) For each tank complying with paragraph (b) of this section, one or more devices which vent directly to the atmosphere may be used on the tank provided each device remains in a closed, sealed position during normal operations except when the device needs to open to prevent physical damage or permanent deformation of the tank or cover resulting from filling or emptying the tank, diurnal temperature changes, atmospheric pressure changes or malfunction of the unit in accordance with good engineering and safety practices for handling flammable, explosive, or other hazardous materials.

(c) Each fixed-roof, seal, access door, and all other openings shall be checked by visual inspection initially and quarterly thereafter to ensure that no cracks or gaps occur and that access doors and other openings are closed and gasketed properly.

(d) Except as provided in §61.350 of this subpart, when a broken seal or gasket or other problem is identified, or when detectable emissions are measured, first efforts at repair shall be made as soon as practicable, but not later than 45 calendar days after identification.

(e) Each owner or operator who controls air pollutant emissions by using an enclosure vented through a closed-vent system to a control device must meet the requirements specified in paragraphs (e)(1) through (4) of this section.

(1) The tank must be located inside a total enclosure. The enclosure must be designed and operated in accordance with the criteria for a permanent total enclosure as specified in “Procedure T—Criteria for and Verification of a

Permanent or Temporary Total Enclosure" in 40 CFR 52.741, appendix B. The enclosure may have permanent or temporary openings to allow worker access; passage of material into or out of the enclosure by conveyor, vehicles, or other mechanical means; entry of permanent mechanical or electrical equipment; or direct airflow into the enclosure. The owner or operator must perform the verification procedure for the enclosure as specified in section 5.0 of Procedure T initially when the enclosure is first installed and, thereafter, annually. A facility that has conducted an initial compliance demonstration and that performs annual compliance demonstrations in accordance with the requirements for Tank Level 2 control requirements 40 CFR 264.1084(i) or 40 CFR 265(i) is not required to make repeat demonstrations of initial and continuous compliance for the purposes of this subpart.

(2) The enclosure must be vented through a closed-vent system to a control device that is designed and operated in accordance with the standards for control devices specified in §61.349.

(3) Safety devices, as defined in this subpart, may be installed and operated as necessary on any enclosure, closed-vent system, or control device used to comply with the requirements of paragraphs (e)(1) and (2) of this section.

(4) The closed-vent system must be designed and operated in accordance with the requirements of §61.349.

[55 FR 8346, Mar. 7, 1990, as amended at 55 FR 18331, May 2, 1990; 58 FR 3096, Jan. 7, 1993; 67 FR 68532, Nov. 12, 2002; 68 FR 6082, Feb. 6, 2003; 68 FR 67935, Dec. 4, 2003]

§ 61.344 Standards: Surface impoundments.

(a) The owner or operator shall meet the following standards for each surface impoundment in which waste is placed in accordance with §61.342(c)(1)(ii) of this subpart:

(1) The owner or operator shall install, operate, and maintain on each surface impoundment a cover (e.g., air-supported structure or rigid cover) and closed-vent system that routes all organic vapors vented from the surface impoundment to a control device.

(i) The cover shall meet the following requirements:

(A) The cover and all openings (e.g., access hatches, sampling ports, and gauge wells) shall be designed to operate with no detectable emissions as indicated by an instrument reading of less than 500 ppmv above background, initially and thereafter at least once per year by the methods specified in §61.355(h) of this subpart.

(B) Each opening shall be maintained in a closed, sealed position (e.g., covered by a lid that is gasketed and latched) at all times that waste is in the surface impoundment except when it is necessary to use the opening for waste sampling or removal, or for equipment inspection, maintenance, or repair.

(C) If the cover and closed-vent system operate such that the enclosure of the surface impoundment is maintained at a pressure less than atmospheric pressure, then paragraph (a)(1)(i)(B) of this section does not apply to any opening that meets all of the following conditions:

(*1*) The purpose of the opening is to provide dilution air to reduce the explosion hazard;

(*2*) The opening is designed to operate with no detectable emissions as indicated by an instrument reading of less than 500 ppmv above background, as determined initially and thereafter at least once per year by the methods specified in §61.355(h) of this subpart; and

(*3*) The pressure is monitored continuously to ensure that the pressure in the enclosure of the surface impoundment remains below atmospheric pressure.

(D) The cover shall be used at all times that waste is placed in the surface impoundment except during removal of treatment residuals in accordance with 40 CFR 268.4 or closure of the surface impoundment in accordance with 40 CFR 264.228. (Note: the treatment residuals generated by these activities may be subject to the requirements of this part.)

(ii) The closed-vent system and control device shall be designed and operated in accordance with §61.349 of this subpart.

(b) Each cover seal, access hatch, and all other openings shall be checked by visual inspection initially and quarterly thereafter to ensure that no cracks or gaps occur and that access hatches and other openings are closed and gasketed properly.

(c) Except as provided in §61.350 of this subpart, when a broken seal or gasket or other problem is identified, or when detectable emissions are measured, first efforts at repair shall be made as soon as practicable, but not later than 15 calendar days after identification.

[55 FR 8346, Mar. 7, 1990, as amended at 58 FR 3097, Jan. 7, 1993]

§ 61.345 Standards: Containers.

(a) The owner or operator shall meet the following standards for each container in which waste is placed in accordance with §61.342(c)(1)(ii) of this subpart:

(1) The owner or operator shall install, operate, and maintain a cover on each container used to handle, transfer, or store waste in accordance with the following requirements:

(i) The cover and all openings (e.g., bungs, hatches, and sampling ports) shall be designed to operate with no detectable emissions as indicated by an instrument reading of less than 500 ppmv above background, initially and thereafter at least once per year by the methods specified in §61.355(h) of this subpart.

(ii) Except as provided in paragraph (a)(4) of this section, each opening shall be maintained in a closed, sealed position (e.g., covered by a lid that is gasketed and latched) at all times that waste is in the container except when it is necessary to use the opening for waste loading, removal, inspection, or sampling.

(2) When a waste is transferred into a container by pumping, the owner or operator shall perform the transfer using a submerged fill pipe. The submerged fill pipe outlet shall extend to within two fill pipe diameters of the bottom of the container while the container is being loaded. During loading of the waste, the cover shall remain in place and all openings shall be maintained in a closed, sealed position except for those openings required for the submerged fill pipe, those openings required for venting of the container to prevent physical damage or permanent deformation of the container or cover, and any openings complying with paragraph (a)(4) of this section.

(3) Treatment of a waste in a container, including aeration, thermal or other treatment, must be performed by the owner or operator in a manner such that while the waste is being treated the container meets the standards specified in paragraphs (a)(3)(i) through (iii) of this section, except for covers and closed-vent systems that meet the requirements in paragraph (a)(4) of this section.

(i) The owner or operator must either:

(A) Vent the container inside a total enclosure which is exhausted through a closed-vent system to a control device in accordance with the requirements of paragraphs (a)(3)(ii)(A) and (B) of this section; or

(B) Vent the covered or closed container directly through a closed-vent system to a control device in accordance with the requirements of paragraphs (a)(3)(ii)(B) and (C) of this section.

(ii) The owner or operator must meet the following requirements, as applicable to the type of air emission control equipment selected by the owner or operator:

(A) The total enclosure must be designed and operated in accordance with the criteria for a permanent total enclosure as specified in section 5 of the “Procedure T—Criteria for and Verification of a Permanent or Temporary Total Enclosure” in 40 CFR 52.741, appendix B. The enclosure may have permanent or temporary openings to allow worker access; passage of containers through the enclosure by conveyor or other mechanical means; entry of

permanent mechanical or electrical equipment; or direct airflow into the enclosure. The owner or operator must perform the verification procedure for the enclosure as specified in section 5.0 of “Procedure T—Criteria for and Verification of a Permanent or Temporary Total Enclosure” initially when the enclosure is first installed and, thereafter, annually. A facility that has conducted an initial compliance demonstration and that performs annual compliance demonstrations in accordance with the Container Level 3 control requirements in 40 CFR 264.1086(e)(2)(i) or 40 CFR 265.1086(e)(2)(i) is not required to make repeat demonstrations of initial and continuous compliance for the purposes of this subpart.

(B) The closed-vent system and control device must be designed and operated in accordance with the requirements of §61.349.

(C) For a container cover, the cover and all openings (*e.g.,* doors, hatches) must be designed to operate with no detectable emissions as indicated by an instrument reading of less than 500 ppmv above background, initially and thereafter at least once per year by the methods specified in §61.355(h).

(iii) Safety devices, as defined in this subpart, may be installed and operated as necessary on any container, enclosure, closed-vent system, or control device used to comply with the requirements of paragraph (a)(3)(i) of this section.

(4) If the cover and closed-vent system operate such that the container is maintained at a pressure less than atmospheric pressure, the owner or operator may operate the system with an opening that is not sealed and kept closed at all times if the following conditions are met:

(i) The purpose of the opening is to provide dilution air to reduce the explosion hazard;

(ii) The opening is designed to operate with no detectable emissions as indicated by an instrument reading of less than 500 ppmv above background, as determined initially and thereafter at least once per year by methods specified in §61.355(h); and

(iii) The pressure is monitored continuously to ensure that the pressure in the container remains below atmospheric pressure.

(b) Each cover and all openings shall be visually inspected initially and quarterly thereafter to ensure that they are closed and gasketed properly.

(c) Except as provided in §61.350 of this subpart, when a broken seal or gasket or other problem is identified, first efforts at repair shall be made as soon as practicable, but not later than 15 calendar days after identification.

[55 FR 8346, Mar. 7, 1990, as amended at 58 FR 3097, Jan. 7, 1993; 67 FR 68532, Nov. 12, 2002; 68 FR 67936, Dec. 4, 2003]

§ 61.346 Standards: Individual drain systems.

(a) Except as provided in paragraph (b) of this section, the owner or operator shall meet the following standards for each individual drain system in which waste is placed in accordance with §61.342(c)(1)(ii) of this subpart:

(1) The owner or operator shall install, operate, and maintain on each drain system opening a cover and closed-vent system that routes all organic vapors vented from the drain system to a control device.

(i) The cover shall meet the following requirements:

(A) The cover and all openings (e.g., access hatches, sampling ports) shall be designed to operate with no detactable emissions as indicated by an instrument reading of less than 500 ppmv above background, initially and thereafter at least once per year by the methods specified in §61.355(h) of this subpart.

(B) Each opening shall be maintained in a closed, sealed position (e.g., covered by a lid that is gasketed and latched) at all times that waste is in the drain system except when it is necessary to use the opening for waste sampling or removal, or for equipment inspection, maintenance, or repair.

(C) If the cover and closed-vent system operate such that the individual drain system is maintained at a pressure less than atmospheric pressure, then paragraph (a)(1)(i)(B) of this section does not apply to any opening that meets all of the following conditions:

(*1*) The purpose of the opening is to provide dilution air to reduce the explosion hazard;

(*2*) The opening is designed to operate with no detectable emissions as indicated by an instrument reading of less than 500 ppmv above background, as determined initially and thereafter at least once per year by the methods specified in §61.355(h); and

(*3*) The pressure is monitored continuously to ensure that the pressure in the individual drain system remains below atmospheric pressure.

(ii) The closed-vent system and control device shall be designed and operated in accordance with §61.349 of this subpart.

(2) Each cover seal, access hatch, and all other openings shall be checked by visual inspection initially and quarterly thereafter to ensure that no cracks or gaps occur and that access hatches and other openings are closed and gasketed properly.

(3) Except as provided in §61.350 of this subpart, when a broken seal or gasket or other problem is identified, or when detectable emissions are measured, first efforts at repair shall be made as soon as practicable, but not later than 15 calendar days after identification.

(b) As an alternative to complying with paragraph (a) of this section, an owner or operator may elect to comply with the following requirements:

(1) Each drain shall be equipped with water seal controls or a tightly sealed cap or plug.

(2) Each junction box shall be equipped with a cover and may have a vent pipe. The vent pipe shall be at least 90 cm (3 ft) in length and shall not exceed 10.2 cm (4 in) in diameter.

(i) Junction box covers shall have a tight seal around the edge and shall be kept in place at all times, except during inspection and maintenance.

(ii) One of the following methods shall be used to control emissions from the junction box vent pipe to the atmosphere:

(A) Equip the junction box with a system to prevent the flow of organic vapors from the junction box vent pipe to the atmosphere during normal operation. An example of such a system includes use of water seal controls on the junction box. A flow indicator shall be installed, operated, and maintained on each junction box vent pipe to ensure that organic vapors are not vented from the junction box to the atmosphere during normal operation.

(B) Connect the junction box vent pipe to a closed-vent system and control device in accordance with §61.349 of this subpart.

(3) Each sewer line shall not be open to the atmosphere and shall be covered or enclosed in a manner so as to have no visual gaps or cracks in joints, seals, or other emission interfaces.

(4) Equipment installed in accordance with paragraphs (b)(1), (b)(2), or (b)(3) of this section shall be inspected as follows:

(i) Each drain using water seal controls shall be checked by visual or physical inspection initially and thereafter quarterly for indications of low water levels or other conditions that would reduce the effectiveness of water seal controls.

(ii) Each drain using a tightly sealed cap or plug shall be visually inspected initially and thereafter quarterly to ensure caps or plugs are in place and properly installed.

(iii) Each junction box shall be visually inspected initially and thereafter quarterly to ensure that the cover is in place and to ensure that the cover has a tight seal around the edge.

(iv) The unburied portion of each sewer line shall be visually inspected initially and thereafter quarterly for indication of cracks, gaps, or other problems that could result in benzene emissions.

(5) Except as provided in §61.350 of this subpart, when a broken seal, gap, crack or other problem is identified, first efforts at repair shall be made as soon as practicable, but not later than 15 calendar days after identification.

[55 FR 8346, Mar. 7, 1990, as amended at 55 FR 37231, Sept. 10, 1990; 58 FR 3097, Jan. 7, 1993]

§ 61.347 Standards: Oil-water separators.

(a) Except as provided in §61.352 of this subpart, the owner or operator shall meet the following standards for each oil-water separator in which waste is placed in accordance with §61.342(c)(1)(ii) of this subpart:

(1) The owner or operator shall install, operate, and maintain a fixed-roof and closed-vent system that routes all organic vapors vented from the oil-water separator to a control device.

(i) The fixed-roof shall meet the following requirements:

(A) The cover and all openings (e.g., access hatches, sampling ports, and gauge wells) shall be designed to operate with no detectable emissions as indicated by an instrument reading of less than 500 ppmv above background, as determined initially and thereafter at least once per year by the methods specified in §61.355(h) of this subpart.

(B) Each opening shall be maintained in a closed, sealed position (e.g., covered by a lid that is gasketed and latched) at all times that waste is in the oil-water separator except when it is necessary to use the opening for waste sampling or removal, or for equipment inspection, maintenance, or repair.

(C) If the cover and closed-vent system operate such that the oil-water separator is maintained at a pressure less than atmospheric pressure, then paragraph (a)(1)(i)(B) of this section does not apply to any opening that meets all of the following conditions:

(*1*) The purpose of the opening is to provide dilution air to reduce the explosion hazard;

(*2*) The opening is designed to operate with no detectable emissions as indicated by an instrument reading of less than 500 ppmv above background, as determined initially and thereafter at least once per year by the methods specified in §61.355(h); and

(*3*) The pressure is monitored continuously to ensure that the pressure in the oil-water separator remains below atmospheric pressure.

(ii) The closed-vent system and control device shall be designed and operated in accordance with the requirements of §61.349 of this subpart.

(b) Each cover seal, access hatch, and all other openings shall be checked by visual inspection initially and quarterly thereafter to ensure that no cracks or gaps occur between the cover and oil-water separator wall and that access hatches and other openings are closed and gasketed properly.

(c) Except as provided in §61.350 of this subpart, when a broken seal or gasket or other problem is identified, or when detectable emissions are measured, first efforts at repair shall be made as soon as practicable, but not later than 15 calendar days after identification.

[55 FR 8346, Mar. 7, 1990, as amended at 58 FR 3098, Jan. 7, 1993]

§ 61.348 Standards: Treatment processes.

(a) Except as provided in paragraph (a)(5) of this section, the owner or operator shall treat the waste stream in accordance with the following requirements:

(1) The owner or operator shall design, install, operate, and maintain a treatment process that either:

(i) Removes benzene from the waste stream to a level less than 10 parts per million by weight (ppmw) on a flow-weighted annual average basis,

(ii) Removes benzene from the waste stream by 99 percent or more on a mass basis, or

(iii) Destroys benzene in the waste stream by incinerating the waste in a combustion unit that achieves a destruction efficiency of 99 percent or greater for benzene.

(2) Each treatment process complying with paragraphs (a)(1)(i) or (a)(1)(ii) of this section shall be designed and operated in accordance with the appropriate waste management unit standards specified in §§61.343 through 61.347 of this subpart. For example, if a treatment process is a tank, then the owner or operator shall comply with §61.343 of this subpart.

(3) For the purpose of complying with the requirements specified in paragraph (a)(1)(i) of this section, the intentional or unintentional reduction in the benzene concentration of a waste stream by dilution of the waste stream with other wastes or materials is not allowed.

(4) An owner or operator may aggregate or mix together individual waste streams to create a combined waste stream for the purpose of facilitating treatment of waste to comply with the requirements of paragraph (a)(1) of this section except as provided in paragraph (a)(5) of this section.

(5) If an owner or operator aggregates or mixes any combination of process wastewater, product tank drawdown, or landfill leachate subject to §61.342(c)(1) of this subpart together with other waste streams to create a combined waste stream for the purpose of facilitating management or treatment of waste in a wastewater treatment system, then the wastewater treatment system shall be operated in accordance with paragraph (b) of this section. These provisions apply to above-ground wastewater treatment systems as well as those that are at or below ground level.

(b) Except for facilities complying with §61.342(e), the owner or operator that aggregates or mixes individual waste streams as defined in paragraph (a)(5) of this section for management and treatment in a wastewater treatment system shall comply with the following requirements:

(1) The owner or operator shall design and operate each waste management unit that comprises the wastewater treatment system in accordance with the appropriate standards specified in §§61.343 through 61.347 of this subpart.

(2) The provisions of paragraph (b)(1) of this section do not apply to any waste management unit that the owner or operator demonstrates to meet the following conditions initially and, thereafter, at least once per year:

(i) The benzene content of each waste stream entering the waste management unit is less than 10 ppmw on a flow-weighted annual average basis as determined by the procedures specified in §61.355(c) of this subpart; and

(ii) The total annual benzene quantity contained in all waste streams managed or treated in exempt waste management units comprising the facility wastewater treatment systems is less than 1 Mg/yr (1.1 ton/yr). For this determination, total annual benzene quantity shall be calculated as follows:

(A) The total annual benzene quantity shall be calculated as the sum of the individual benzene quantities determined at each location where a waste stream first enters an exempt waste management unit. The benzene quantity discharged from an exempt waste management unit shall not be included in this calculation.

(B) The annual benzene quantity in a waste stream managed or treated in an enhanced biodegradation unit shall not be included in the calculation of the total annual benzene quantity, if the enhanced biodegradation unit is the first exempt unit in which the waste is managed or treated. A unit shall be considered enhanced biodegradation if it is a suspended-growth process that generates biomass, uses recycled biomass, and periodically removes biomass from the process. An enhanced biodegradation unit typically operates at a food-to-microorganism ratio in the range of 0.05 to 1.0 kg of biological oxygen demand per kg of biomass per day, a mixed liquor suspended solids ratio in the range of 1 to 8 grams per liter (0.008 to 0.7 pounds per liter), and a residence time in the range of 3 to 36 hours.

(c) The owner and operator shall demonstrate that each treatment process or wastewater treatment system unit, except as provided in paragraph (d) of this section, achieves the appropriate conditions specified in paragraphs (a) or (b) of this section in accordance with the following requirements:

(1) Engineering calculations in accordance with requirements specified in §61.356(e) of this subpart; or

(2) Performance tests conducted using the test methods and procedures that meet the requirements specified in §61.355 of this subpart.

(d) A treatment process or waste stream is in compliance with the requirements of this subpart and exempt from the requirements of paragraph (c) of this section provided that the owner or operator documents that the treatment process or waste stream is in compliance with other regulatory requirements as follows:

(1) The treatment process is a hazardous waste incinerator for which the owner or operator has been issued a final permit under 40 CFR part 270 and complies with the requirements of 40 CFR part 264, subpart O;

(2) The treatment process is an industrial furnace or boiler burning hazardous waste for energy recovery for which the owner or operator has been issued a final permit under 40 CFR part 270 and complies with the requirements of 40 CFR part 266, subpart D;

(3) The waste stream is treated by a means or to a level that meets benzene-specific treatment standards in accordance with the Land Disposal Restrictions under 40 CFR part 268, and the treatment process is designed and operated with a closed-vent system and control device meeting the requirements of §61.349 of this subpart;

(4) The waste stream is treated by a means or to a level that meets benzene-specific effluent limitations or performance standards in accordance with the Effluent Guidelines and Standards under 40 CFR parts 401–464, and the treatment process is designed and operated with a closed-vent system and control device meeting the requirements of §61.349 of this subpart; or

(5) The waste stream is discharged to an underground injection well for which the owner or operator has been issued a final permit under 40 CFR part 270 and complies with the requirements of 40 CFR part 122.

(e) Except as specified in paragraph (e)(3) of this section, if the treatment process or wastewater treatment system unit has any openings (e.g., access doors, hatches, etc.), all such openings shall be sealed (e.g., gasketed, latched, etc.) and kept closed at all times when waste is being treated, except during inspection and maintenance.

(1) Each seal, access door, and all other openings shall be checked by visual inspections initially and quarterly thereafter to ensure that no cracks or gaps occur and that openings are closed and gasketed properly.

(2) Except as provided in §61.350 of this subpart, when a broken seal or gasket or other problem is identified, first efforts at repair shall be made as soon as practicable, but not later than 15 calendar days after identification.

(3) If the cover and closed-vent system operate such that the treatment process and wastewater treatment system unit are maintained at a pressure less than atmospheric pressure, the owner or operator may operate the system with an opening that is not sealed and kept closed at all times if the following conditions are met:

(i) The purpose of the opening is to provide dilution air to reduce the explosion hazard;

(ii) The opening is designed to operate with no detectable emissions as indicated by an instrument reading of less than 500 ppmv above background, as determined initially and thereafter at least once per year by the methods specified in §61.355(h); and

(iii) The pressure is monitored continuously to ensure that the pressure in the treatment process and wastewater treatment system unit remain below atmospheric pressure.

(f) Except for treatment processes complying with paragraph (d) of this section, the Administrator may request at any time an owner or operator demonstrate that a treatment process or wastewater treatment system unit meets the applicable requirements specified in paragraphs (a) or (b) of this section by conducting a performance test using the test methods and procedures as required in §61.355 of this subpart.

(g) The owner or operator of a treatment process or wastewater treatment system unit that is used to comply with the provisions of this section shall monitor the unit in accordance with the applicable requirements in §61.354 of this subpart.

[55 FR 8346, Mar. 7, 1990, as amended at 55 FR 37231, Sept. 10, 1990; 58 FR 3098, Jan. 7, 1993; 65 FR 62160, Oct. 17, 2000]

§ 61.349 Standards: Closed-ventsystems and control devices.

(a) For each closed-vent system and control device used to comply with standards in accordance with §§61.343 through 61.348 of this subpart, the owner or operator shall properly design, install, operate, and maintain the closed-vent system and control device in accordance with the following requirements:

(1) The closed-vent system shall:

(i) Be designed to operate with no detectable emissions as indicated by an instrument reading of less than 500 ppmv above background, as determined initially and thereafter at least once per year by the methods specified in §61.355(h) of this subpart.

(ii) Vent systems that contain any bypass line that could divert the vent stream away from a control device used to comply with the provisions of this subpart shall install, maintain, and operate according to the manufacturer's specifications a flow indicator that provides a record of vent stream flow away from the control device at least once every 15 minutes, except as provided in paragraph (a)(1)(ii)(B) of this section.

(A) The flow indicator shall be installed at the entrance to any bypass line that could divert the vent stream away from the control device to the atmosphere.

(B) Where the bypass line valve is secured in the closed position with a car-seal or a lock-and-key type configuration, a flow indicator is not required.

(iii) All gauging and sampling devices shall be gas-tight except when gauging or sampling is taking place.

(iv) For each closed-vent system complying with paragraph (a) of this section, one or more devices which vent directly to the atmosphere may be used on the closed-vent system provided each device remains in a closed, sealed position during normal operations except when the device needs to open to prevent physical damage or permanent deformation of the closed-vent system resulting from malfunction of the unit in accordance with good engineering and safety practices for handling flammable, explosive, or other hazardous materials.

(2) The control device shall be designed and operated in accordance with the following conditions:

(i) An enclosed combustion device (e.g., a vapor incinerator, boiler, or process heater) shall meet one of the following conditions:

(A) Reduce the organic emissions vented to it by 95 weight percent or greater;

(B) Achieve a total organic compound concentration of 20 ppmv (as the sum of the concentrations for individual compounds using Method 18) on a dry basis corrected to 3 percent oxygen; or

(C) Provide a minimum residence time of 0.5 seconds at a minimum temperature of 760 °C (1,400 °F). If a boiler or process heater issued as the control device, then the vent stream shall be introduced into the flame zone of the boiler or process heater.

(ii) A vapor recovery system (e.g., a carbon adsorption system or a condenser) shall recover or control the organic emissions vented to it with an efficiency of 95 weight percent or greater, or shall recover or control the benzene emissions vented to it with an efficiency of 98 weight percent or greater.

(iii) A flare shall comply with the requirements of 40 CFR 60.18.

(iv) A control device other than those described in paragraphs (a)(2) (i) through (iii) of this section may be used provided that the following conditions are met:

(A) The device shall recover or control the organic emissions vented to it with an efficiency of 95 weight percent or greater, or shall recover or control the benzene emissions vented to it with an efficiency of 98 weight percent or greater.

(B) The owner or operator shall develop test data and design information that documents the control device will achieve an emission control efficiency of either 95 percent or greater for organic compounds or 98 percent or greater for benzene.

(C) The owner or operator shall identify:

(*1*) The critical operating parameters that affect the emission control performance of the device;

(*2*) The range of values of these operating parameters that ensure the emission control efficiency specified in paragraph (a)(2)(iv)(A) of this section is maintained during operation of the device; and

(*3*) How these operating parameters will be monitored to ensure the proper operation and maintenance of the device.

(D) The owner or operator shall submit the information and data specified in paragraphs (a)(2)(iv) (B) and (C) of this section to the Administrator prior to operation of the alternative control device.

(E) The Administrator will determine, based on the information submitted under paragraph (a)(2)(iv)(D) of this section, if the control device subiect to paragraph (a)(2)(iv) of this section meets the requirements of §61.349. The control device subject to paragraph (a)(2)(iv) of this section may be operated prior to receiving approval from the Administrator. However, if the Administrator determines that the control device does not meet the requirements of §61.349, the facility may be subject to enforcement action beginning from the time the control device began operation.

(b) Each closed-vent system and control device used to comply with this subpart shall be operated at all times when waste is placed in the waste management unit vented to the control device except when maintenance or repair of the waste management unit cannot be completed without a shutdown of the control device.

(c) An owner and operator shall demonstrate that each control device, except for a flare, achieves the appropriate conditions specified in paragraph (a)(2) of this section by using one of the following methods:

(1) Engineering calculations in accordance with requirements specified in §61.356(f) of this subpart; or

(2) Performance tests conducted using the test methods and procedures that meet the requirements specified in §61.355 of this subpart.

(d) An owner or operator shall demonstrate compliance of each flare in accordance with paragraph (a)(2)(iii) of this section.

(e) The Administrator may request at any time an owner or operator demonstrate that a control device meets the applicable conditions specified in paragraph (a)(2) of this section by conducting a performance test using the test methods and procedures as required in §61.355, and for control devices subject to paragraph (a)(2)(iv) of this section, the Administrator may specify alternative test methods and procedures, as appropriate.

(f) Each closed-vent system and control device shall be visually inspected initially and quarterly thereafter. The visual inspection shall include inspection of ductwork and piping and connections to covers and control devices for evidence of visable defects such as holes in ductwork or piping and loose connections.

(g) Except as provided in §61.350 of this subpart, if visible defects are observed during an inspection, or if other problems are identified, or if detectable emissions are measured, a first effort to repair the closed-vent system and control device shall be made as soon as practicable but no later than 5 calendar days after detection. Repair shall be completed no later than 15 calendar days after the emissions are detected or the visible defect is observed.

(h) The owner or operator of a control device that is used to comply with the provisions of this section shall monitor the control device in accordance with §61.354(c) of this subpart.

[55 FR 8346, Mar. 7, 1990; 55 FR 12444, Apr. 3, 1990, as amended at 55 FR 37231, Sept. 10, 1990; 58 FR 3098, Jan. 7, 1993; 65 FR 62160, Oct. 17, 2000]

§ 61.350 Standards: Delay of repair.

(a) Delay of repair of facilities or units that are subject to the provisions of this subpart will be allowed if the repair is technically impossible without a complete or partial facility or unit shutdown.

(b) Repair of such equipment shall occur before the end of the next facility or unit shutdown.

§ 61.351 Alternative standards for tanks.

(a) As an alternative to the standards for tanks specified in §61.343 of this subpart, an owner or operator may elect to comply with one of the following:

(1) A fixed roof and internal floating roof meeting the requirements in 40 CFR 60.112b(a)(1);

(2) An external floating roof meeting the requirements of 40 CFR 60.112b (a)(2); or

(3) An alternative means of emission limitation as described in 40 CFR 60.114b.

(b) If an owner or operator elects to comply with the provisions of this section, then the owner or operator is exempt from the provisions of §61.343 of this subpart applicable to the same facilities.

[55 FR 8346, Mar. 7, 1990, as amended at 55 FR 37231, Sept. 10, 1990]

§ 61.352 Alternative standards for oil-water separators.

(a) As an alternative to the standards for oil-water separators specified in §61.347 of this subpart, an owner or operator may elect to comply with one of the following:

(1) A floating roof meeting the requirements in 40 CFR 60.693–2(a); or

(2) An alternative means of emission limitation as described in 40 CFR 60.694.

(b) For portions of the oil-water separator where it is infeasible to construct and operate a floating roof, such as over the weir mechanism, a fixed roof vented to a vapor control device that meets the requirements in §§61.347 and 61.349 of this subpart shall be installed and operated.

(c) Except as provided in paragraph (b) of this section, if an owner or operator elects to comply with the provisions of this section, then the owner or operator is exempt from the provisions in §61.347 of this subpart applicable to the same facilities.

§ 61.353 Alternative means of emission limitation.

(a) If, in the Administrator's judgment, an alternative means of emission limitation will achieve a reduction in benzene emissions at least equivalent to the reduction in benzene emissions from the source achieved by the applicable design, equipment, work practice, or operational requirements in §§61.342 through 61.349, the Administrator will publish in the Federal Register a notice permitting the use of the alternative means for purposes of compliance with that requirement. The notice may condition the permission on requirements related to the operation and maintenance of the alternative means.

(b) Any notice under paragraph (a) of this section shall be published only after public notice and an opportunity for a hearing.

(c) Any person seeking permission under this section shall collect, verify, and submit to the Administrator information showing that the alternative means achieves equivalent emission reductions.

[55 FR 8346, Mar. 7, 1990, as amended at 58 FR 3099, Jan. 7, 1993]

§ 61.354 Monitoring of operations.

(a) Except for a treatment process or waste stream complying with §61.348(d), the owner or operator shall monitor each treatment process or wastewater treatment system unit to ensure the unit is properly operated and maintained by one of the following monitoring procedures:

(1) Measure the benzene concentration of the waste stream exiting the treatment process complying with §61.348(a)(1)(i) at least once per month by collecting and analyzing one or more samples using the procedures specified in §61.355(c)(3).

(2) Install, calibrate, operate, and maintain according to manufacturer's specifications equipment to continuously monitor and record a process parameter (or parameters) for the treatment process or wastewater treatment system unit that indicates proper system operation. The owner or operator shall inspect at least once each operating day the data recorded by the monitoring equipment (e.g., temperature monitor or flow indicator) to ensure that the unit is operating properly.

(b) If an owner or operator complies with the requirements of §61.348(b), then the owner or operator shall monitor each wastewater treatment system to ensure the unit is properly operated and maintained by the appropriate monitoring procedure as follows:

(1) For the first exempt waste management unit in each waste treatment train, other than an enhanced biodegradation unit, measure the flow rate, using the procedures of §61.355(b), and the benzene concentration of each waste stream entering the unit at least once per month by collecting and analyzing one or more samples using the procedures specified in §61.355(c)(3).

(2) For each enhanced biodegradation unit that is the first exempt waste management unit in a treatment train, measure the benzene concentration of each waste stream entering the unit at least once per month by collecting and analyzing one or more samples using the procedures specified in §61.355(c)(3).

(c) An owner or operator subject to the requirements in §61.349 of this subpart shall install, calibrate, maintain, and operate according to the manufacturer's specifications a device to continuously monitor the control device operation as specified in the following paragraphs, unless alternative monitoring procedures or requirements are approved for that facility by the Administrator. The owner or operator shall inspect at least once each operating day the data recorded by the monitoring equipment (e.g., temperature monitor or flow indicator) to ensure that the control device is operating properly.

(1) For a thermal vapor incinerator, a temperature monitoring device equipped with a continuous recorder. The device shall have an accuracy of ±1 percent of the temperature being monitored in °C or ±0.5 °C, whichever is greater. The temperature sensor shall be installed at a representative location in the combustion chamber.

(2) For a catalytic vapor incinerator, a temperature monitoring device equipped with a continuous recorder. The device shall be capable of monitoring temperature at two locations, and have an accuracy of ±1 percent of the temperature being monitored in °C or ±0.5 °C, whichever is greater. One temperature sensor shall be installed in the vent stream at the nearest feasible point to the catalyst bed inlet and a second temperature sensor shall be installed in the vent stream at the nearest feasible point to the catalyst bed outlet.

(3) For a flare, a monitoring device in accordance with 40 CFR 60.18(f)(2) equipped with a continuous recorder.

(4) For a boiler or process heater having a design heat input capacity less than 44 MW (150×10^6 BTU/hr), a temperature monitoring device equipped with a continuous recorder. The device shall have an accuracy of ±1 percent of the temperature being monitored in °C or ±0.5 °C, whichever is greater. The temperature sensor shall be installed at a representative location in the combustion chamber.

(5) For a boiler or process heater having a design heat input capacity greater than or equal to 44 MW (150×10^6 BTU/hr), a monitoring device equipped with a continuous recorder to measure a parameter(s) that indicates good combustion operating practices are being used.

(6) For a condenser, either:

(i) A monitoring device equipped with a continuous recorder to measure either the concentration level of the organic compounds or the concentration level of benzene in the exhaust vent stream from the condenser; or

(ii) A temperature monitoring device equipped with a continuous recorder. The device shall be capable of monitoring temperature at two locations, and have an accuracy of ±1 percent of the temperature being monitored in °C or ±0.5 °C, whichever is greater. One temperature sensor shall be installed at a location in the exhaust stream from the condenser, and a second temperature sensor shall be installed at a location in the coolant fluid exiting the condenser.

(7) For a carbon adsorption system that regenerates the carbon bed directly in the control device such as a fixed-bed carbon adsorber, either:

(i) A monitoring device equipped with a continuous recorder to measure either the concentration level of the organic compounds or the benzene concentration level in the exhaust vent stream from the carbon bed; or

(ii) A monitoring device equipped with a continuous recorder to measure a parameter that indicates the carbon bed is regenerated on a regular, predetermined time cycle.

(8) For a vapor recovery system other than a condenser or carbon adsorption system, a monitoring device equipped with a continuous recorder to measure either the concentration level of the organic compounds or the benzene concentration level in the exhaust vent stream from the control device.

(9) For a control device subject to the requirements of §61.349(a)(2)(iv), devices to monitor the parameters as specified in §61.349(a)(2)(iv)(C).

(d) For a carbon adsorption system that does not regenerate the carbon bed directly on site in the control device (e.g., a carbon canister), either the concentration level of the organic compounds or the concentration level of benzene in the exhaust vent stream from the carbon adsorption system shall be monitored on a regular schedule, and the existing carbon shall be replaced with fresh carbon immediately when carbon breakthrough is indicated. The device shall be monitored on a daily basis or at intervals no greater than 20 percent of the design carbon replacement interval, whichever is greater. As an alternative to conducting this monitoring, an owner or operator may replace the carbon in the carbon adsorption system with fresh carbon at a regular predetermined time interval that is less than the carbon replacement interval that is determined by the maximum design flow rate and either the organic concentration or the benzene concentration in the gas stream vented to the carbon adsorption system.

(e) An alternative operation or process parameter may be monitored if it can be demonstrated that another parameter will ensure that the control device is operated in conformance with these standards and the control device's design specifications.

(f) Owners or operators using a closed-vent system that contains any bypass line that could divert a vent stream from a control device used to comply with the provisions of this subpart shall do the following:

(1) Visually inspect the bypass line valve at least once every month, checking the position of the valve and the condition of the car-seal or closure mechanism required under §61.349(a)(1)(ii) to ensure that the valve is maintained in the closed position and the vent stream is not diverted through the bypass line.

(2) Visually inspect the readings from each flow monitoring device required by §61.349(a)(1)(ii) at least once each operating day to check that vapors are being routed to the control device as required.

(g) Each owner or operator who uses a system for emission control that is maintained at a pressure less than atmospheric pressure with openings to provide dilution air shall install, calibrate, maintain, and operate according to the manufacturer's specifications a device equipped with a continuous recorder to monitor the pressure in the unit to ensure that it is less than atmospheric pressure.

[55 FR 8346, Mar. 7, 1990, as amended at 58 FR 3099, Jan. 7, 1993; 65 FR 62160, Oct. 17, 2000]

§ 61.355 Test methods, procedures, and compliance provisions.

(a) An owner or operator shall determine the total annual benzene quantity from facility waste by the following procedure:

(1) For each waste stream subject to this subpart having a flow-weighted annual average water content greater than 10 percent water, on a volume basis as total water, or is mixed with water or other wastes at any time and the resulting mixture has an annual average water content greater than 10 percent as specified in §61.342(a), the owner or operator shall:

(i) Determine the annual waste quantity for each waste stream using the procedures specified in paragraph (b) of this section.

(ii) Determine the flow-weighted annual average benzene concentration for each waste stream using the procedures specified in paragraph (c) of this section.

(iii) Calculate the annual benzene quantity for each waste stream by multiplying the annual waste quantity of the waste stream times the flow-weighted annual average benzene concentration.

(2) Total annual benzene quantity from facility waste is calculated by adding together the annual benzene quantity for each waste stream generated during the year and the annual benzene quantity for each process unit turnaround waste annualized according to paragraph (b)(4) of this section.

(3) If the total annual benzene quantity from facility waste is equal to or greater than 10 Mg/yr (11 ton/yr), then the owner or operator shall comply with the requirements of §61.342 (c), (d), or (e).

(4) If the total annual benzene quantity from facility waste is less than 10 Mg/yr (11 ton/yr) but is equal to or greater than 1 Mg/yr (1.1 ton/yr), then the owner or operator shall:

(i) Comply with the recordkeeping requirements of §61.356 and reporting requirements of §61.357 of this subpart; and

(ii) Repeat the determination of total annual benzene quantity from facility waste at least once per year and whenever there is a change in the process generating the waste that could cause the total annual benzene quantity from facility waste to increase to 10 Mg/yr (11 ton/yr) or more.

(5) If the total annual benzene quantity from facility waste is less than 1 Mg/yr (1.1 ton/yr), then the owner or operator shall:

(i) Comply with the recordkeeping requirements of §61.356 and reporting requirements of §61.357 of this subpart; and

(ii) Repeat the determination of total annual benzene quantity from facility waste whenever there is a change in the process generating the waste that could cause the total annual benzene quantity from facility waste to increase to 1 Mg/yr (1.1 ton/yr) or more.

(6) The benzene quantity in a waste stream that is generated less than one time per year, except as provided for process unit turnaround waste in paragraph (b)(4) of this section, shall be included in the determination of total annual benzene quantity from facility waste for the year in which the waste is generated unless the waste stream is otherwise excluded from the determination of total annual benzene quantity from facility waste in accordance with paragraphs (a) through (c) of this section. The benzene quantity in this waste stream shall not be annualized or averaged over the time interval between the activities that resulted in generation of the waste, for purposes of determining the total annual benzene quantity from facility waste.

(b) For purposes of the calculation required by paragraph (a) of this section, an owner or operator shall determine the annual waste quantity at the point of waste generation, unless otherwise provided in paragraphs (b) (1), (2), (3), and (4) of this section, by one of the methods given in paragraphs (b) (5) through (7) of this section.

(1) The determination of annual waste quantity for sour water streams that are processed in sour water strippers shall be made at the point that the water exits the sour water stripper.

(2) The determination of annual waste quantity for wastes at coke by-product plants subject to and complying with the control requirements of §61.132, 61.133, 61.134, or 61.139 of subpart L of this part shall be made at the location that the waste stream exits the process unit component or waste management unit controlled by that subpart or at the exit of the ammonia still, provided that the following conditions are met:

(i) The transfer of wastes between units complying with the control requirements of subpart L of this part, process units, and the ammonia still is made through hard piping or other enclosed system.

(ii) The ammonia still meets the definition of a sour water stripper in §61.341.

(3) The determination of annual waste quantity for wastes that are received at hazardous waste treatment, storage, or disposal facilities from offsite shall be made at the point where the waste enters the hazardous waste treatment, storage, or disposal facility.

(4) The determination of annual waste quantity for each process unit turnaround waste generated only at 2 year or greater intervals, may be made by dividing the total quantity of waste generated during the most recent process unit turnaround by the time period (in the nearest tenth of a year) between the turnaround resulting in generation of the waste and the most recent preceding process turnaround for the unit. The resulting annual waste quantity shall be included in the calculation of the annual benzene quantity as provided in paragraph (a)(1)(iii) of this section for the year in which the turnaround occurs and for each subsequent year until the unit undergoes the next process turnaround. For estimates of total annual benzene quantity as specified in the 90-day report, required under §61.357(a)(1), the owner or operator shall estimate the waste quantity generated during the most recent turnaround, and the time period between turnarounds in accordance with good engineering practices. If the owner or operator

chooses not to annualize process unit turnaround waste, as specified in this paragraph, then the process unit turnaround waste quantity shall be included in the calculation of the annual benzene quantity for the year in which the turnaround occurs.

(5) Select the highest annual quantity of waste managed from historical records representing the most recent 5 years of operation or, if the facility has been in service for less than 5 years but at least 1 year, from historical records representing the total operating life of the facility;

(6) Use the maximum design capacity of the waste management unit; or

(7) Use measurements that are representative of maximum waste generation rates.

(c) For the purposes of the calculation required by §§61.355(a) of this subpart, an owner or operator shall determine the flow-weighted annual average ben- zene concentration in a manner that meets the requirements given in paragraph (c)(1) of this section using either of the methods given in paragraphs (c)(2) and (c)(3) of this section.

(1) The determination of flow-weighted annual average benzene concentration shall meet all of the following criteria:

(i) The determination shall be made at the point of waste generation except for the specific cases given in paragraphs (c)(1)(i)(A) through (D) of this section.

(A) The determination for sour water streams that are processed in sour water strippers shall be made at the point that the water exits the sour water stripper.

(B) The determination for wastes at coke by-product plants subject to and complying with the control requirements of §61.132, 61.133, 61.134, or 61.139 of subpart L of this part shall be made at the location that the waste stream exits the process unit component or waste management unit controlled by that subpart or at the exit of the ammonia still, provided that the following conditions are met:

(*1*) The transfer of wastes between units complying with the control requirements of subpart L of this part, process units, and the ammonia still is made through hard piping or other enclosed system.

(*2*) The ammonia still meets the definition of a sour water stripper in §61.341.

(C) The determination for wastes that are received from offsite shall be made at the point where the waste enters the hazardous waste treatment, storage, or disposal facility.

(D) The determination of flow-weighted annual average benzene concentration for process unit turnaround waste shall be made using either of the methods given in paragraph (c)(2) or (c)(3) of this section. The resulting flow-weighted annual average benzene concentration shall be included in the calculation of annual benzene quantity as provided in paragraph (a)(1)(iii) of this section for the year in which the turnaround occurs and for each subsequent year until the unit undergoes the next process unit turnaround.

(ii) Volatilization of the benzene by exposure to air shall not be used in the determination to reduce the benzene concentration.

(iii) Mixing or diluting the waste stream with other wastes or other materials shall not be used in the determination—to reduce the benzene concentration.

(iv) The determination shall be made prior to any treatment of the waste that removes benzene, except as specified in paragraphs (c)(1)(i)(A) through (D) of this section.

(v) For wastes with multiple phases, the determination shall provide the weighted-average benzene concentration based on the benzene concentration in each phase of the waste and the relative proportion of the phases.

(2) *Knowledge of the waste.* The owner or operator shall provide sufficient information to document the flow-weighted annual average benzene concentration of each waste stream. Examples of information that could constitute knowledge include material balances, records of chemicals purchases, or previous test results provided the results are still relevant to the current waste stream conditions. If test data are used, then the owner or operator shall provide documentation describing the testing protocol and the means by which sampling variability and analytical variability were accounted for in the determination of the flow-weighted annual average benzene concentration for the waste stream. When an owner or operator and the Administrator do not agree on determinations of the flow-weighted annual average benzene concentration based on knowledge of the waste, the procedures under paragraph (c)(3) of this section shall be used to resolve the disagreement.

(3) Measurements of the benzene concentration in the waste stream in accordance with the following procedures:

(i) Collect a minimum of three representative samples from each waste stream. Where feasible, samples shall be taken from an enclosed pipe prior to the waste being exposed to the atmosphere.

(ii) For waste in enclosed pipes, the following procedures shall be used:

(A) Samples shall be collected prior to the waste being exposed to the atmosphere in order to minimize the loss of benzene prior to sampling.

(B) A static mixer shall be installed in the process line or in a by-pass line unless the owner or operator demonstrates that installation of a static mixer in the line is not necessary to accurately determine the benzene concentration of the waste stream.

(C) The sampling tap shall be located within two pipe diameters of the static mixer outlet.

(D) Prior to the initiation of sampling, sample lines and cooling coil shall be purged with at least four volumes of waste.

(E) After purging, the sample flow shall be directed to a sample container and the tip of the sampling tube shall be kept below the surface of the waste during sampling to minimize contact with the atmosphere.

(F) Samples shall be collected at a flow rate such that the cooling coil is able to maintain a waste temperature less than 10 °C (50 °F).

(G) After filling, the sample container shall be capped immediately (within 5 seconds) to leave a minimum headspace in the container.

(H) The sample containers shall immediately be cooled and maintained at a temperature below 10 °C (50 °F) for transfer to the laboratory.

(iii) When sampling from an enclosed pipe is not feasible, a minimum of three representative samples shall be collected in a manner to minimize exposure of the sample to the atmosphere and loss of benzene prior to sampling.

(iv) Each waste sample shall be analyzed using one of the following test methods for determining the benzene concentration in a waste stream:

(A) Method 8020, Aromatic Volatile Organics, in “Test Methods for Evaluating Solid Waste, Physical/Chemical Methods,” EPA Publication No. SW–846 (incorporation by reference as specified in §61.18 of this part);

(B) Method 8021, Volatile Organic Compounds in Water by Purge and Trap Capillary Column Gas Chromatography with Photoionization and Electrolytic Conductivity Detectors in Series in “Test Methods for Evaluating Solid Waste, Physical/Chemical Methods,” EPA Publication No. SW–846 (incorporation by reference as specified in §61.18 of this part);

(C) Method 8240, Gas Chromatography/Mass Spectrometry for Volatile Organics in “Test Methods for Evaluating Solid Waste, Physical/Chemical Methods,” EPA Publication No. SW–846 (incorporation by reference as specified in §61.18 of this part);

(D) Method 8260, Gas Chromatography/Mass Spectrometry for Volatile Organics: Capillary Column Technique in “Test Methods for Evaluating Solid Waste, Physical/Chemical Methods,” EPA Publication No. SW–846 (incorporation by reference as specified in §61.18 of this part);

(E) Method 602, Purgeable Aromatics, as described in 40 CFR part 136, appendix A, Test Procedures for Analysis of Organic Pollutants, for wastewaters for which this is an approved EPA methods; or

(F) Method 624, Purgeables, as described in 40 CFR part 136, appendix A, Test Procedures for Analysis of Organic Pollutants, for wastewaters for which this is an approved EPA method.

(v) The flow-weighted annual average benzene concentration shall be calculated by averaging the results of the sample analyses as follows:

$$\bar{C} = \frac{1}{Q_t} \times \sum_{i=1}^{N} (Q_i)(C_i)$$

Where:

C=Flow-weighted annual average benzene concentration for waste stream, ppmw.

Q_t=Total annual waste quantity for waste stream, kg/yr (lb/yr).

n=Number of waste samples (at least 3).

Q_i=Annual waste quantity for waste stream represented by C_i, kg/yr (lb/yr).

C_i=Measured concentration of benzene in waste sample i, ppmw.

(d) An owner or operator using performance tests to demonstrate compliance of a treatment process with §61.348 (a)(1)(i) shall measure the flow-weighted annual average benzene concentration of the waste stream exiting the treatment process by collecting and analyzing a minimum of three representative samples of the waste stream using the procedures in paragraph (c)(3) of this section. The test shall be conducted under conditions that exist when the treatment process is operating at the highest inlet waste stream flow rate and benzene content expected to occur. Operations during periods of startup, shutdown, and malfunction shall not constitute representative conditions for the purpose of a test. The owner or operator shall record all process information as is necessary to document the operating conditions during the test.

(e) An owner or operator using performance tests to demonstrate compliance of a treatment process with §61.348(a)(1)(ii) of this subpart shall determine the percent reduction of benzene in the waste stream on a mass basis by the following procedure:

(1) The test shall be conducted under conditions that exist when the treatment process is operating at the highest inlet waste stream flow rate and benzene content expected to occur. Operations during periods of startup, shutdown, and malfunction shall not constitute representative conditions for the purpose of a test. The owner or operator shall record all process information as is necessary to document the operating conditions during the test.

(2) All testing equipment shall be prepared and installed as specified in the appropriate test methods.

(3) The mass flow rate of benzene entering the treatment process (E_b) shall be determined by computing the product of the flow rate of the waste stream entering the treatment process, as determined by the inlet flow meter, and the

benzene concentration of the waste stream, as determined using the sampling and analytical procedures specified in paragraph (c)(2) or (c)(3) of this section. Three grab samples of the waste shall be taken at equally spaced time intervals over a 1-hour period. Each 1-hour period constitutes a run, and the performance test shall consist of a minimum of 3 runs conducted over a 3-hour period. The mass flow rate of benzene entering the treatment process is calculated as follows:

$$E_b = \frac{K}{n \times 10^6}\left[\sum_{i=1}^{n} V_i C_i\right]$$

Where:

E_b= Mass flow rate of benzene entering the treatment process, kg/hr (lb/hr).

K = Density of the waste stream, kg/m^3 (lb/ft^3).

V_i= Average volume flow rate of waste entering the treatment process during each run i, m^3 /hr (ft^3 /hr).

C_i= Average concentration of benzene in the waste stream entering the treatment process during each run i, ppmw.

n = Number of runs.

10^6 = Conversion factor for ppmw.

(4) The mass flow rate of benzene exiting the treatment process (E_a) shall be determined by computing the product of the flow rate of the waste stream exiting the treatment process, as determined by the outlet flow meter or the inlet flow meter, and the benzene concentration of the waste stream, as determined using the sampling and analytical procedures specified in paragraph (c)(2) or (c)(3) of this section. Three grab samples of the waste shall be taken at equally spaced time intervals over a 1-hour period. Each 1-hour period constitutes a run, and the performance test shall consist of a minimum of 3 runs conducted over the same 3-hour period at which the mass flow rate of benzene entering the treatment process is determined. The mass flow rate of benzene exiting the treatment process is calculated as follows:

$$E_a = \frac{K}{n \times 10^6}\left[\sum_{i=1}^{n} V_i C_i\right]$$

Where:

E_a= Mass flow rate of benzene exiting the treatment process, kg/hr (lb/hr).

K = Density of the waste stream, kg/m^3 (lb/ft^3).

V_i= Average volume flow rate of waste exiting the treatment process during each run i, m^3 /hr (ft^3 /hr).

C_i= Average concentration of benzene in the waste stream exiting the treatment process during each run i, ppmw.

n = Number of runs.

10^6 = Conversion factor for ppmw.

(f) An owner or operator using performance tests to demonstrate compliance of a treatment process with §61.348(a)(1)(iii) of this subpart shall determine the benzene destruction efficiency for the combustion unit by the following procedure:

(1) The test shall be conducted under conditions that exist when the combustion unit is operating at the highest inlet waste stream flow rate and benzene content expected to occur. Operations during periods of startup, shutdown, and malfunction shall not constitute representative conditions for the purpose of a test. The owner or operator shall record all process information necessary to document the operating conditions during the test.

(2) All testing equipment shall be prepared and installed as specified in the appropriate test methods.

(3) The mass flow rate of benzene entering the combustion unit shall be determined by computing the product of the flow rate of the waste stream entering the combustion unit, as determined by the inlet flow meter, and the benzene concentration of the waste stream, as determined using the sampling procedures in paragraph (c)(2) or (c)(3) of this section. Three grab samples of the waste shall be taken at equally spaced time intervals over a 1-hour period. Each 1-hour period constitutes a run, and the performance test shall consist of a minimum of 3 runs conducted over a 3-hour period. The mass flow rate of benzene into the combustion unit is calculated as follows:

$$E_b = \frac{K}{n \times 10^6}\left[\sum_{i=1}^{n} V_i C_i\right]$$

Where:

E_b= Mass flow rate of benzene entering the combustion unit, kg/hr (lb/hr).

K = Density of the waste stream, kg/m^3 (lb/ft^3).

V_i= Average volume flow rate of waste entering the combustion unit during each run i, m^3 /hr (ft^3 /hr).

C_i= Average concentration of benzene in the waste stream entering the combustion unit during each run i, ppmw.

n = Number of runs.

10^6 = Conversion factor for ppmw.

(4) The mass flow rate of benzene exiting the combustion unit exhaust stack shall be determined as follows:

(i) The time period for the test shall not be less than 3 hours during which at least 3 stack gas samples are collected and be the same time period at which the mass flow rate of benzene entering the treatment process is determined. Each sample shall be collected over a 1-hour period (e.g., in a tedlar bag) to represent a time-integrated composite sample and each 1-hour period shall correspond to the periods when the waste feed is sampled.

(ii) A run shall consist of a 1-hour period during the test. For each run:

(A) The reading from each measurement shall be recorded;

(B) The volume exhausted shall be determined using Method 2, 2A, 2C, or 2D from appendix A of 40 CFR part 60, as appropriate.

(C) The average benzene concentration in the exhaust downstream of the combustion unit shall be determined using Method 18 from appendix A of 40 CFR part 60.

(iii) The mass of benzene emitted during each run shall be calculated as follows:

$$M_i = D_b V C \left(10^{-6}\right)$$

Where:

M_i= Mass of benzene emitted during run i, kg (lb).

V = Volume of air-vapor mixture exhausted at standard conditions, m^3 (ft^3).

C = Concentration of benzene measured in the exhaust, ppmv.

D_b= Density of benzene, 3.24 kg/m^3 (0.202 lb/ft^3).

10^6 = Conversion factor for ppmv.

(iv) The benzene mass emission rate in the exhaust shall be calculated as follows:

$$E_a = \left(\sum_{i=1}^{n} M_i\right) / T$$

Where:

E_a= Mass flow rate of benzene emitted from the combustion unit, kg/hr (lb/hr).

M_i= Mass of benzene emitted from the combustion unit during run i, kg (lb).

T = Total time of all runs, hr.

n = Number of runs.

(5) The benzene destruction efficiency for the combustion unit shall be calculated as follows:

$$R = \frac{E_b - E_a}{E_b} \times 100$$

Where:

R = Benzene destruction efficiency for the combustion unit, percent.

E_b= Mass flow rate of benzene entering the combustion unit, kg/hr (lb/hr).

E_a= Mass flow rate of benzene emitted from the combustion unit, kg/hr (lb/hr).

(g) An owner or operator using performance tests to demonstrate compliance of a wastewater treatment system unit with §61.348(b) shall measure the flow-weighted annual average benzene concentration of the wastewater stream where the waste stream enters an exempt waste management unit by collecting and analyzing a minimum of three representative samples of the waste stream using the procedures in paragraph (c)(3) of this section. The test shall be conducted under conditions that exist when the wastewater treatment system is operating at the highest inlet

wastewater stream flow rate and benzene content expected to occur. Operations during periods of startup, shutdown, and malfunction shall not constitute representative conditions for the purpose of a test. The owner or operator shall record all process information as is necessary to document the operating conditions during the test.

(h) An owner or operator shall test equipment for compliance with no detectable emissions as required in §§61.343 through 61.347, and §61.349 of this subpart in accordance with the following requirements:

(1) Monitoring shall comply with Method 21 from appendix A of 40 CFR part 60.

(2) The detection instrument shall meet the performance criteria of Method 21.

(3) The instrument shall be calibrated before use on each day of its use by the procedures specified in Method 21.

(4) Calibration gases shall be:

(i) Zero air (less than 10 ppm of hydrocarbon in air); and

(ii) A mixture of methane or n-hexane and air at a concentration of approximately, but less than, 10,000 ppm methane or n-hexane.

(5) The background level shall be determined as set forth in Method 21.

(6) The instrument probe shall be traversed around all potential leak interfaces as close as possible to the interface as described in Method 21.

(7) The arithmetic difference between the maximum concentration indicated by the instrument and the background level is compared to 500 ppm for determining compliance.

(i) An owner or operator using a performance test to demonstrate compliance of a control device with either the organic reduction efficiency requirement or the benzene reduction efficiency requirement specified under §61.349(a)(2) shall use the following procedures:

(1) The test shall be conducted under conditions that exist when the waste management unit vented to the control device is operating at the highest load or capacity level expected to occur. Operations during periods of startup, shutdown, and malfunction shall not constitute representative conditions for the purpose of a test. The owner or operator shall record all process information necessary to document the operating conditions during the test.

(2) Sampling sites shall be selected using Method 1 or 1A from appendix A of 40 CFR part 60, as appropriate.

(3) The mass flow rate of either the organics or benzene entering and exiting the control device shall be determined as follows:

(i) The time period for the test shall not be less than 3 hours during which at least 3 stack gas samples are collected. Samples of the vent stream entering and exiting the control device shall be collected during the same time period. Each sample shall be collected over a 1-hour period (e.g., in a tedlar bag) to represent a time-integrated composite sample.

(ii) A run shall consist of a 1-hour period during the test. For each run:

(A) The reading from each measurement shall be recorded;

(B) The volume exhausted shall be determined using Method 2, 2A, 2C, or 2D from appendix A of 40 CFR part 60, as appropriate;

(C) The organic concentration or the benzene concentration, as appropriate, in the vent stream entering and exiting the control shall be determined using Method 18 from appendix A of 40 CFR part 60.

(iii) The mass of organics or benzene entering and exiting the control device during each run shall be calculated as follows:

$$M_{aj} = \frac{K_1 V_{aj}}{10^6}\left(\sum_{i=1}^{n} C_{ai} MW_i\right)$$

$$M_{bj} = \frac{K_1 V_{bj}}{10^6}\left(\sum_{i=1}^{n} C_{bi} MW_i\right)$$

M_{aj}= Mass of organics or benzene in the vent stream entering the control device during run j, kg (lb).

M_{bj}= Mass of organics or benzene in the vent stream exiting the control device during run j, kg (lb).

V_{aj}= Volume of vent stream entering the control device during run j, at standard conditions, m^3 (ft^3).

V_{bj}= Volume of vent stream exiting the control device during run j, at standard conditions, m^3 (ft^3).

C_{ai}= Organic concentration of compound i or the benzene concentration measured in the vent stream entering the control device as determined by Method 18, ppm by volume on a dry basis.

C_{bi}= Organic concentration of compound i or the benzene concentration measured in the vent stream exiting the control device as determined by Method 18, ppm by volume on a dry basis.

MW_i= Molecular weight of organic compound i in the vent stream, or the molecular weight of benzene, kg/kg-mol (lb/lb-mole).

n = Number of organic compounds in the vent stream; if benzene reduction efficiency is being demonstrated, then n=1.

K_1= Conversion factor for molar volume at standard conditions (293 K and 760 mm Hg (527 R and 14.7 psia))

= 0.0416 kg-mol/m^3 (0.00118 lb-mol/ft^3)

10^{-6}=Conversion factor for ppmv.

(iv) The mass flow rate of organics or benzene entering and exiting the control device shall be calculated as follows:

$$E_a - \left(\sum_{j=1}^{n} M_{aj}\right) / T$$

$$E_b - \left(\sum_{j=1}^{n} M_{bj}\right) / T$$

Where:

E_a= Mass flow rate of organics or benzene entering the control device, kg/hr (lb/hr).

E_b= Mass flow rate of organics or benzene exiting the control device, kg/hr (lb/hr).

M_{aj}= Mass of organics or benzene in the vent stream entering the control device during run j, kg (lb).

M_{bj}= Mass of organics or benzene in the vent stream exiting the control device during run j, kg (lb).

T = Total time of all runs, hr.

n = Number of runs.

(4) The organic reduction efficiency or the benzene reduction efficiency for the control device shall be calculated as follows:

$$R = \frac{E_a - E_b}{E_a} \times 100$$

Where:

R = Total organic reduction of efficiency or benzene reduction efficiency for the control device, percent.

E_b= Mass flow rate of organics or benzene entering the control device, kg/hr (lb/hr).

E_a= Mass flow rate of organic or benzene emitted from the control device, kg/hr (lb/hr).

(j) An owner or operator shall determine the benzene quantity for the purposes of the calculation required by §61.342 (c)(3)(ii)(B) according to the provisions of paragraph (a) of this section, except that the procedures in paragraph (a) of this section shall also apply to wastes with a water content of 10 percent or less.

(k) An owner or operator shall determine the benzene quantity for the purposes of the calculation required by §61.342(e)(2) by the following procedure:

(1) For each waste stream that is not controlled for air emissions in accordance with §61.343. 61.344, 61.345, 61.346, 61.347, or 61.348(a), as applicable to the waste management unit that manages the waste, the benzene quantity shall be determined as specified in paragraph (a) of this section, except that paragraph (b)(4) of this section shall not apply, i.e., the waste quantity for process unit turnaround waste is not annualized but shall be included in the determination of benzene quantity for the year in which the waste is generated for the purposes of the calculation required by §61.342(e)(2).

(2) For each waste stream that is controlled for air emissions in accordance with §61.343. 61.344, 61.345, 61.346, 61.347, or 61.348(a), as applicable to the waste management unit that manages the waste, the determination of annual waste quantity and flow-weighted annual average benzene concentration shall be made at the first applicable location as described in paragraphs (k)(2)(i), (k)(2)(ii), and (k)(2)(iii) of this section and prior to any reduction of benzene concentration through volatilization of the benzene, using the methods given in (k)(2)(iv) and (k)(2)(v) of this section.

(i) Where the waste stream enters the first waste management unit not complying with §§61.343, 61.344, 61.345, 61.346, 61.347, and 61.348(a) that are applicable to the waste management unit,

(ii) For each waste stream that is managed or treated only in compliance with §§61.343 through 61.348(a) up to the point of final direct discharge from the facility, the determination of benzene quantity shall be prior to any reduction of benzene concentration through volatilization of the benzene, or

(iii) For wastes managed in units controlled for air emissions in accordance with §§61.343, 61.344, 61.345, 61.346, 61.347, and 61.348(a), and then transferred offsite, facilities shall use the first applicable offsite location as described in paragraphs (k)(2)(i) and (k)(2)(ii) of this section if they have documentation from the offsite facility of the benzene quantity at this location. Facilities without this documentation for offsite wastes shall use the benzene quantity determined at the point where the transferred waste leaves the facility.

(iv) Annual waste quantity shall be determined using the procedures in paragraphs (b)(5), (6), or (7) of this section, and

(v) The flow-weighted annual average benzene concentration shall be determined using the procedures in paragraphs (c)(2) or (3) of this section.

(3) The benzene quantity in a waste stream that is generated less than one time per year, including process unit turnaround waste, shall be included in the determination of benzene quantity as determined in paragraph (k)(6) of this section for the year in which the waste is generated. The benzene quantity in this waste stream shall not be annualized or averaged over the time interval between the activities that resulted in generation of the waste for purposes of determining benzene quantity as determined in paragraph (k)(6) of this section.

(4) The benzene in waste entering an enhanced biodegradation unit, as defined in §61.348(b)(2)(ii)(B), shall not be included in the determination of benzene quantity, determined in paragraph (k)(6) of this section, if the following conditions are met:

(i) The benzene concentration for each waste stream entering the enhanced biodegradation unit is less than 10 ppmw on a flow-weighted annual average basis, and

(ii) All prior waste management units managing the waste comply with §§61.343, 61.344, 61.345, 61.346, 61.347 and 61.348(a).

(5) The benzene quantity for each waste stream in paragraph (k)(2) of this section shall be determined by multiplying the annual waste quantity of each waste stream times its flow-weighted annual average benzene concentration.

(6) The total benzene quantity for the purposes of the calculation required by §61.342(e)(2) shall be determined by adding together the benzene quantities determined in paragraphs (k)(1) and (k)(5) of this section for each applicable waste stream.

(7) If the benzene quantity determined in paragraph (6) of this section exceeds 6.0 Mg/yr (6.6 ton/yr) only because of multiple counting of the benzene quantity for a waste stream, the owner or operator may use the following procedures for the purposes of the calculation required by §61.342(e)(2):

(i) Determine which waste management units are involved in the multiple counting of benzene;

(ii) Determine the quantity of benzene that is emitted, recovered, or removed from the affected units identified in paragraph (k)(7)(i) of this section, or destroyed in the units if applicable, using either direct measurements or the best available estimation techniques developed or approved by the Administrator.

(iii) Adjust the benzene quantity to eliminate the multiple counting of benzene based on the results from paragraph (k)(7)(ii) of this section and determine the total benzene quantity for the purposes of the calculation required by §61.342(e)(2).

(iv) Submit in the annual report required under §61.357(a) a description of the methods used and the resulting calculations for the alternative procedure under paragraph (k)(7) of this section, the benzene quantity determination from paragraph (k)(6) of this section, and the adjusted benzene quantity determination from paragraph (k)(7)(iii) of this section.

[55 FR 8346, Mar. 7, 1990; 55 FR 12444, Apr. 3, 1990, as amended at 55 FR 37231, Sept. 10, 1990; 58 FR 3099, Jan. 7, 1993; 65 FR 62160, Oct. 17, 2000]

§ 61.356 Recordkeeping requirements.

(a) Each owner or operator of a facility subject to the provisions of this subpart shall comply with the recordkeeping requirements of this section. Each record shall be maintained in a readily accessible location at the facility site for a period not less than two years from the date the information is recorded unless otherwise specified.

(b) Each owner or operator shall maintain records that identify each waste stream at the facility subject to this subpart, and indicate whether or not the waste stream is controlled for benzene emissions in accordance with this subpart. In addition the owner or operator shall maintain the following records:

(1) For each waste stream not controlled for benzene emissions in accordance with this subpart, the records shall include all test results, measurements, calculations, and other documentation used to determine the following information for the waste stream: waste stream identification, water content, whether or not the waste stream is a process wastewater stream, annual waste quantity, range of benzene concentrations, annual average flow-weighted benzene concentration, and annual benzene quantity.

(2) For each waste stream exempt from §61.342(c)(1) in accordance with §61.342(c)(3), the records shall include:

(i) All measurements, calculations, and other documentation used to determine that the continuous flow of process wastewater is less than 0.02 liters (0.005 gallons) per minute or the annual waste quantity of process wastewater is less than 10 Mg/yr (11 ton/yr) in accordance with §61.342(c)(3)(i), or

(ii) All measurements, calculations, and other documentation used to determine that the sum of the total annual benzene quantity in all exempt waste streams does not exceed 2.0 Mg/yr (2.2 ton/yr) in accordance with §61.342(c)(3)(ii).

(3) For each facility where process wastewater streams are controlled for benzene emissions in accordance with §61.342(d) of this subpart, the records shall include for each treated process wastewater stream all measurements, calculations, and other documentation used to determine the annual benzene quantity in the process wastewater stream exiting the treatment process.

(4) For each facility where waste streams are controlled for benzene emissions in accordance with §61.342(e), the records shall include for each waste stream all measurements, including the locations of the measurements, calculations, and other documentation used to determine that the total benzene quantity does not exceed 6.0 Mg/yr (6.6 ton/yr).

(5) For each facility where the annual waste quantity for process unit turnaround waste is determined in accordance with §61.355(b)(5), the records shall include all test results, measurements, calculations, and other documentation used to determine the following information: identification of each process unit at the facility that undergoes turnarounds, the date of the most recent turnaround for each process unit, identification of each process unit turnaround waste, the water content of each process unit turnaround waste, the annual waste quantity determined in accordance with §61.355(b)(5), the range of benzene concentrations in the waste, the annual average flow-weighted benzene concentration of the waste, and the annual benzene quantity calculated in accordance with §61.355(a)(1)(iii) of this section.

(6) For each facility where wastewater streams are controlled for benzene emissions in accordance with §61.348(b)(2), the records shall include all measurements, calculations, and other documentation used to determine the annual benzene content of the waste streams and the total annual benzene quantity contained in all waste streams managed or treated in exempt waste management units.

(c) An owner or operator transferring waste off-site to another facility for treatment in accordance with §61.342(f) shall maintain documentation for each offsite waste shipment that includes the following information: Date waste is shipped offsite, quantity of waste shipped offsite, name and address of the facility receiving the waste, and a copy of the notice sent with the waste shipment.

(d) An owner or operator using control equipment in accordance with §§61.343 through 61.347 shall maintain engineering design documentation for all control equipment that is installed on the waste management unit. The documentation shall be retained for the life of the control equipment. If a control device is used, then the owner or operator shall maintain the control device records required by paragraph (f) of this section.

(e) An owner or operator using a treatment process or wastewater treatment system unit in accordance with §61.348 of this subpart shall maintain the following records. The documentation shall be retained for the life of the unit.

(1) A statement signed and dated by the owner or operator certifying that the unit is designed to operate at the documented performance level when the waste stream entering the unit is at the highest waste stream flow rate and benzene content expected to occur.

(2) If engineering calculations are used to determine treatment process or wastewater treatment system unit performance, then the owner or operator shall maintain the complete design analysis for the unit. The design analysis shall include for example the following information: Design specifications, drawings, schematics, piping and instrumentation diagrams, and other documentation necessary to demonstrate the unit performance.

(3) If performance tests are used to determine treatment process or wastewater treatment system unit performance, then the owner or operator shall maintain all test information necessary to demonstrate the unit performance.

(i) A description of the unit including the following information: type of treatment process; manufacturer name and model number; and for each waste stream entering and exiting the unit, the waste stream type (e.g., process wastewater, sludge, slurry, etc.), and the design flow rate and benzene content.

(ii) Documentation describing the test protocol and the means by which sampling variability and analytical variability were accounted for in the determination of the unit performance. The description of the test protocol shall include the following information: sampling locations, sampling method, sampling frequency, and analytical procedures used for sample analysis.

(iii) Records of unit operating conditions during each test run including all key process parameters.

(iv) All test results.

(4) If a control device is used, then the owner or operator shall maintain the control device records required by paragraph (f) of this section.

(f) An owner or operator using a closed-vent system and control device in accordance with §61.349 of this subpart shall maintain the following records. The documentation shall be retained for the life of the control device.

(1) A statement signed and dated by the owner or operator certifying that the closed-vent system and control device is designed to operate at the documented performance level when the waste management unit vented to the control device is or would be operating at the highest load or capacity expected to occur.

(2) If engineering calculations are used to determine control device performance in accordance with §61.349(c), then a design analysis for the control device that includes for example:

(i) Specifications, drawings, schematics, and piping and instrumentation diagrams prepared by the owner or operator, or the control device manufacturer or vendor that describe the control device design based on acceptable engineering texts. The design analysis shall address the following vent stream characteristics and control device operating parameters:

(A) For a thermal vapor incinerator, the design analysis shall consider the vent stream composition, constituent concentrations, and flow rate. The design analysis shall also establish the design minimum and average temperature in the combustion zone and the combustion zone residence time.

(B) For a catalytic vapor incinerator, the design analysis shall consider the vent stream composition, constituent concentrations, and flow rate. The design analysis shall also establish the design minimum and average temperatures across the catalyst bed inlet and outlet.

(C) For a boiler or process heater, the design analysis shall consider the vent stream composition, constituent concentrations, and flow rate. The design analysis shall also establish the design minimum and average flame zone temperatures, combustion zone residence time, and description of method and location where the vent stream is introduced into the flame zone.

(D) For a flare, the design analysis shall consider the vent stream composition, constituent concentrations, and flow rate. The design analysis shall also consider the requirements specified in 40 CFR 60.18.

(E) For a condenser, the design analysis shall consider the vent stream composition, constituent concentration, flow rate, relative humidity, and temperature. The design analysis shall also establish the design outlet organic compound concentration level or the design outlet benzene concentration level, design average temperature of the condenser exhaust vent stream, and the design average temperatures of the coolant fluid at the condenser inlet and outlet.

(F) For a carbon adsorption system that regenerates the carbon bed directly on-site in the control device such as a fixed-bed adsorber, the design analysis shall consider the vent stream composition, constituent concentration, flow rate, relative humidity, and temperature. The design analysis shall also establish the design exhaust vent stream organic compound concentration level or the design exhaust vent stream benzene concentration level, number and capacity of carbon beds, type and working capacity of activated carbon used for carbon beds, design total steam flow over the period of each complete carbon bed regeneration cycle, duration of the carbon bed steaming and cooling/drying cycles, design carbon bed temperature after regeneration, design carbon bed regeneration time, and design service life of carbon.

(G) For a carbon adsorption system that does not regenerate the carbon bed directly on-site in the control device, such as a carbon canister, the design analysis shall consider the vent stream composition, constituent concentration, flow rate, relative humidity, and temperature. The design analysis shall also establish the design exhaust vent stream organic compound concentration level or the design exhaust vent stream benzene concentration level, capacity of carbon bed, type and working capacity of activated carbon used for carbon bed, and design carbon replacement interval based on the total carbon working capacity of the control device and source operating schedule.

(H) For a control device subject to the requirements of §61.349(a)(2)(iv), the design analysis shall consider the vent stream composition, constituent concentration, and flow rate. The design analysis shall also include all of the information submitted under §61.349 (a)(2)(iv).

(ii) [Reserved]

(3) If performance tests are used to determine control device performance in accordance with §61.349(c) of this subpart:

(i) A description of how it is determined that the test is conducted when the waste management unit or treatment process is operating at the highest load or capacity level. This description shall include the estimated or design flow rate and organic content of each vent stream and definition of the acceptable operating ranges of key process and control parameters during the test program.

(ii) A description of the control device including the type of control device, control device manufacturer's name and model number, control device dimensions, capacity, and construction materials.

(iii) A detailed description of sampling and monitoring procedures, including sampling and monitoring locations in the system, the equipment to be used, sampling and monitoring frequency, and planned analytical procedures for sample analysis.

(iv) All test results.

(g) An owner or operator shall maintain a record for each visual inspection required by §§61.343 through 61.347 of this subpart that identifies a problem (such as a broken seal, gap or other problem) which could result in benzene

emissions. The record shall include the date of the inspection, waste management unit and control equipment location where the problem is identified, a description of the problem, a description of the corrective action taken, and the date the corrective action was completed.

(h) An owner or operator shall maintain a record for each test of no detectable emissions required by §§61.343 through 61.347 and §61.349 of this subpart. The record shall include the following information: date the test is performed, background level measured during test, and maximum concentration indicated by the instrument reading measured for each potential leak interface. If detectable emissions are measured at a leak interface, then the record shall also include the waste management unit, control equipment, and leak interface location where detectable emissions were measured, a description of the problem, a description of the corrective action taken, and the date the corrective action was completed.

(i) For each treatment process and wastewater treatment system unit operated to comply with §61.348, the owner or operator shall maintain documentation that includes the following information regarding the unit operation:

(1) Dates of startup and shutdown of the unit.

(2) If measurements of waste stream benzene concentration are performed in accordance with §61.354(a)(1) of this subpart, the owner or operator shall maintain records that include date each test is performed and all test results.

(3) If a process parameter is continuously monitored in accordance with §61.354(a)(2) of this subpart, the owner or operator shall maintain records that include a description of the operating parameter (or parameters) to be monitored to ensure that the unit will be operated in conformance with these standards and the unit's design specifications, and an explanation of the criteria used for selection of that parameter (or parameters). This documentation shall be kept for the life of the unit.

(4) If measurements of waste stream benzene concentration are performed in accordance with §61.354(b), the owner or operator shall maintain records that include the date each test is performed and all test results.

(5) Periods when the unit is not operated as designed.

(j) For each control device, the owner or operator shall maintain documentation that includes the following information regarding the control device operation:

(1) Dates of startup and shutdown of the closed-vent system and control device.

(2) A description of the operating parameter (or parameters) to be monitored to ensure that the control device will be operated in conformance with these standards and the control device's design specifications and an explanation of the criteria used for selection of that parameter (or parameters). This documentation shall be kept for the life of the control device.

(3) Periods when the closed-vent system and control device are not operated as designed including all periods and the duration when:

(i) Any valve car-seal or closure mechanism required under §61.349(a)(1)(ii) is broken or the by-pass line valve position has changed.

(ii) The flow monitoring devices required under §61.349(a)(1)(ii) indicate that vapors are not routed to the control device as required.

(4) If a thermal vapor incinerator is used, then the owner or operator shall maintain continuous records of the temperature of the gas stream in the combustion zone of the incinerator and records of all 3-hour periods of operation during which the average temperature of the gas stream in the combustion zone is more than 28 °C (50 °F) below the design combustion zone temperature.

(5) If a catalytic vapor incinerator is used, then the owner or operator shall maintain continuous records of the temperature of the gas stream both upstream and downstream of the catalyst bed of the incinerator, records of all 3-

hour periods of operation during which the average temperature measured before the catalyst bed is more than 28 °C (50 °F) below the design gas stream temperature, and records of all 3-hour periods of operation during which the average temperature difference across the catalyst bed is less than 80 percent of the design temperature difference.

(6) If a boiler or process heater is used, then the owner or operator shall maintain records of each occurrence when there is a change in the location at which the vent stream is introduced into the flame zone as required by §61.349(a)(2)(i)(C). For a boiler or process heater having a design heat input capacity less than 44 MW (150 × 106 BTU/hr), the owner or operator shall maintain continuous records of the temperature of the gas stream in the combustion zone of the boiler or process heater and records of all 3-hour periods of operation during which the average temperature of the gas stream in the combustion zone is more than 28 °C (50 °F) below the design combustion zone temperature. For a boiler or process heater having a design heat input capacity greater than or equal to 44 MW (150 × 106 BTU/hr), the owner or operator shall maintain continuous records of the parameter(s) monitored in accordance with the requirements of §61.354(c)(5).

(7) If a flare is used, then the owner or operator shall maintain continuous records of the flare pilot flame monitoring and records of all periods during which the pilot flame is absent.

(8) If a condenser is used, then the owner or operator shall maintain records from the monitoring device of the parameters selected to be monitored in accordance with §61.354(c)(6). If concentration of organics or concentration of benzene in the control device outlet gas stream is monitored, then the owner or operator shall record all 3-hour periods of operation during which the concentration of organics or the concentration of benzene in the exhaust stream is more than 20 percent greater than the design value. If the temperature of the condenser exhaust stream and coolant fluid is monitored, then the owner or operator shall record all 3-hour periods of operation during which the temperature of the condenser exhaust vent stream is more than 6 °C (11 °F) above the design average exhaust vent stream temperature, or the temperature of the coolant fluid exiting the condenser is more than 6 °C (11 °F) above the design average coolant fluid temperature at the condenser outlet.

(9) If a carbon adsorber is used, then the owner or operator shall maintain records from the monitoring device of the concentration of organics or the concentration of benzene in the control device outlet gas stream. If the concentration of organics or the concentration of benzene in the control device outlet gas stream is monitored, then the owner or operator shall record all 3-hour periods of operation during which the concentration of organics or the concentration of benzene in the exhaust stream is more than 20 percent greater than the design value. If the carbon bed regeneration interval is monitored, then the owner or operator shall record each occurrence when the vent stream continues to flow through the control device beyond the predetermined carbon bed regeneration time.

(10) If a carbon adsorber that is not regenerated directly on site in the control device is used, then the owner or operator shall maintain records of dates and times when the control device is monitored, when breakthrough is measured, and shall record the date and time then the existing carbon in the control device is replaced with fresh carbon.

(11) If an alternative operational or process parameter is monitored for a control device, as allowed in §61.354(e) of this subpart, then the owner or operator shall maintain records of the continuously monitored parameter, including periods when the device is not operated as designed.

(12) If a control device subject to the requirements of §61.349(a)(2)(iv) is used, then the owner or operator shall maintain records of the parameters that are monitored and each occurrence when the parameters monitored are outside the range of values specified in §61.349(a)(2)(iv)(C), or other records as specified by the Administrator.

(k) An owner or operator who elects to install and operate the control equipment in §61.351 of this subpart shall comply with the recordkeeping requirements in 40 CFR 60.115b.

(l) An owner or operator who elects to install and operate the control equipment in §61.352 of this subpart shall maintain records of the following:

(1) The date, location, and corrective action for each visual inspection required by 40 CFR 60.693–2(a)(5), during which a broken seal, gap, or other problem is identified that could result in benzene emissions.

(2) Results of the seal gap measurements required by 40 CFR 60.693–2(a).

(m) If a system is used for emission control that is maintained at a pressure less than atmospheric pressure with openings to provide dilution air, then the owner or operator shall maintain records of the monitoring device and records of all periods during which the pressure in the unit is operated at a pressure that is equal to or greater than atmospheric pressure.

(n) Each owner or operator using a total enclosure to comply with control requirements for tanks in §61.343 or the control requirements for containers in §61.345 must keep the records required in paragraphs (n)(1) and (2) of this section. Owners or operators may use records as required in 40 CFR 264.1089(b)(2)(iv) or 40 CFR 265.1090(b)(2)(iv) for a tank or as required in 40 CFR 264.1089(d)(1) or 40 CFR 265.1090(d)(1) for a container to meet the recordkeeping requirement in paragraph (n)(1) of this section. The owner or operator must make the records of each verification of a total enclosure available for inspection upon request.

(1) Records of the most recent set of calculations and measurements performed to verify that the enclosure meets the criteria of a permanent total enclosure as specified in “Procedure T—Criteria for and Verification of a Permanent or Temporary Total Enclosure” in 40 CFR 52.741, appendix B;

(2) Records required for a closed-vent system and control device according to the requirements in paragraphs (d) (f), and (j) of this section.

[55 FR 8346, Mar. 7, 1990; 55 FR 12444, Apr. 3, 1990; 55 FR 18331, May 2, 1990, as amended at 58 FR 3103, Jan. 7, 1993; 65 FR 62161, Oct. 17, 2000; 67 FR 68533, Nov. 12, 2002]

§ 61.357 Reporting requirements.

(a) Each owner or operator of a chemical plant, petroleum refinery, coke by-product recovery plant, and any facility managing wastes from these industries shall submit to the Administrator within 90 days after January 7, 1993, or by the initial startup for a new source with an initial startup after the effective date, a report that summarizes the regulatory status of each waste stream subject to §61.342 and is determined by the procedures specified in §61.355(c) to contain benzene. Each owner or operator subject to this subpart who has no benzene onsite in wastes, products, by-products, or intermediates shall submit an initial report that is a statement to this effect. For all other owners or operators subject to this subpart, the report shall include the following information:

(1) Total annual benzene quantity from facility waste determined in accordance with §61.355(a) of this subpart.

(2) A table identifying each waste stream and whether or not the waste stream will be controlled for benzene emissions in accordance with the requirements of this subpart.

(3) For each waste stream identified as not being controlled for benzene emissions in accordance with the requirements of this subpart the following information shall be added to the table:

(i) Whether or not the water content of the waste stream is greater than 10 percent;

(ii) Whether or not the waste stream is a process wastewater stream, product tank drawdown, or landfill leachate;

(iii) Annual waste quantity for the waste stream;

(iv) Range of benzene concentrations for the waste stream;

(v) Annual average flow-weighted benzene concentration for the waste stream; and

(vi) Annual benzene quantity for the waste stream.

(4) The information required in paragraphs (a) (1), (2), and (3) of this section should represent the waste stream characteristics based on current configuration and operating conditions. An owner or operator only needs to list in the report those waste streams that contact materials containing benzene. The report does not need to include a description of the controls to be installed to comply with the standard or other information required in §61.10(a).

(b) If the total annual benzene quantity from facility waste is less than 1 Mg/yr (1.1 ton/yr), then the owner or operator shall submit to the Administrator a report that updates the information listed in paragraphs (a)(1) through (a)(3) of this section whenever there is a change in the process generating the waste stream that could cause the total annual benzene quantity from facility waste to increase to 1 Mg/yr (1.1 ton/yr) or more.

(c) If the total annual benzene quantity from facility waste is less than 10 Mg/yr (11 ton/yr) but is equal to or greater than 1 Mg/yr (1.1 ton/yr), then the owner or operator shall submit to the Administrator a report that updates the information listed in paragraphs (a)(1) through (a)(3) of this section. The report shall be submitted annually and whenever there is a change in the process generating the waste stream that could cause the total annual benzene quantity from facility waste to increase to 10 Mg/yr (11 ton/yr) or more. If the information in the annual report required by paragraphs (a)(1) through (a)(3) of this section is not changed in the following year, the owner or operator may submit a statement to that effect.

(d) If the total annual benzene quantity from facility waste is equal to or greater than 10 Mg/yr (11 ton/yr), then the owner or operator shall submit to the Administrator the following reports:

(1) Within 90 days after January 7, 1993, unless a waiver of compliance under §61.11 of this part is granted, or by the date of initial startup for a new source with an initial startup after the effective date, a certification that the equipment necessary to comply with these standards has been installed and that the required initial inspections or tests have been carried out in accordance with this subpart. If a waiver of compliance is granted under §61.11, the certification of equipment necessary to comply with these standards shall be submitted by the date the waiver of compliance expires.

(2) Beginning on the date that the equipment necessary to comply with these standards has been certified in accordance with paragraph (d)(1) of this section, the owner or operator shall submit annually to the Administrator a report that updates the information listed in paragraphs (a)(1) through (a)(3) of this section. If the information in the annual report required by paragraphs (a)(1) through (a)(3) of this section is not changed in the following year, the owner or operator may submit a statement to that effect.

(3) If an owner or operator elects to comply with the requirements of §61.342(c)(3)(ii), then the report required by paragraph (d)(2) of this section shall include a table identifying each waste stream chosen for exemption and the total annual benzene quantity in these exempted streams.

(4) If an owner or operator elects to comply with the alternative requirements of §61.342(d) of this subpart, then he shall include in the report required by paragraph (d)(2) of this section a table presenting the following information for each process wastewater stream:

(i) Whether or not the process wastewater stream is being controlled for benzene emissions in accordance with the requirements of this subpart;

(ii) For each process wastewater stream identified as not being controlled for benzene emissions in accordance with the requirements of this subpart, the table shall report the following information for the process wastewater stream as determined at the point of waste generation: annual waste quantity, range of benzene concentrations, annual average flow-weighted benzene concentration, and annual benzene quantity;

(iii) For each process wastewater stream identified as being controlled for benzene emissions in accordance with the requirements of this subpart, the table shall report the following information for the process wastewater stream as determined at the exit to the treatment process: Annual waste quantity, range of benzene concentrations, annual average flow-weighted benzene concentration, and annual benzene quantity.

(5) If an owner or operator elects to comply with the alternative requirements of §61.342(e), then the report required by paragraph (d)(2) of this section shall include a table presenting the following information for each waste stream:

(i) For each waste stream identified as not being controlled for benzene emissions in accordance with the requirements of this subpart; the table shall report the following information for the waste stream as determined at the point of waste generation: annual waste quantity, range of benzene concentrations, annual average flow-weighted benzene concentration, and annual benzene quantity;

(ii) For each waste stream identified as being controlled for benzene emissions in accordance with the requirements of this subpart; the table shall report the following information for the waste stream as determined at the applicable location described in §61.355(k)(2): Annual waste quantity, range of benzene concentrations, annual average flow-weighted benzene concentration, and annual benzene quantity.

(6) Beginning 3 months after the date that the equipment necessary to comply with these standards has been certified in accordance with paragraph (d)(1) of this section, the owner or operator shall submit quarterly to the Administrator a certification that all of the required inspections have been carried out in accordance with the requirements of this subpart.

(7) Beginning 3 months after the date that the equipment necessary to comply with these standards has been certified in accordance with paragraph (d)(1) of this section, the owner or operator shall submit a report quarterly to the Administrator that includes:

(i) If a treatment process or wastewater treatment system unit is monitored in accordance with §61.354(a)(1) of this subpart, then each period of operation during which the concentration of benzene in the monitored waste stream exiting the unit is equal to or greater than 10 ppmw.

(ii) If a treatment process or wastewater treatment system unit is monitored in accordance with §61.354(a)(2) of this subpart, then each 3-hour period of operation during which the average value of the monitored parameter is outside the range of acceptable values or during which the unit is not operating as designed.

(iii) If a treatment process or wastewater treatment system unit is monitored in accordance with §61.354(b), then each period of operation during which the flow-weighted annual average concentration of benzene in the monitored waste stream entering the unit is equal to or greater than 10 ppmw and/or the total annual benzene quantity is equal to or greater than 1.0 mg/yr.

(iv) For a control device monitored in accordance with §61.354(c) of this subpart, each period of operation monitored during which any of the following conditions occur, as applicable to the control device:

(A) Each 3-hour period of operation during which the average temperature of the gas stream in the combustion zone of a thermal vapor incinerator, as measured by the temperature monitoring device, is more than 28 °C (50 °F) below the design combustion zone temperature.

(B) Each 3-hour period of operation during which the average temperature of the gas stream immediately before the catalyst bed of a catalytic vapor incinerator, as measured by the temperature monitoring device, is more than 28 °C (50 °F) below the design gas stream temperature, and any 3-hour period during which the average temperature difference across the catalyst bed (i.e., the difference between the temperatures of the gas stream immediately before and after the catalyst bed), as measured by the temperature monitoring device, is less than 80 percent of the design temperature difference.

(C) Each 3-hour period of operation during which the average temperature of the gas stream in the combustion zone of a boiler or process heater having a design heat input capacity less than 44 MW (150 × 106 BTU/hr), as mesured by the temperature monitoring device, is more than 28 °C (50 °F) below the design combustion zone temperature.

(D) Each 3-hour period of operation during which the average concentration of organics or the average concentration of benzene in the exhaust gases from a carbon adsorber, condenser, or other vapor recovery system is more than 20 percent greater than the design concentration level of organics or benzene in the exhaust gas.

(E) Each 3-hour period of operation during which the temperature of the condenser exhaust vent stream is more than 6 °C (11 °F) above the design average exhaust vent stream temperature, or the temperature of the coolant fluid exiting the condenser is more than 6 °C (11 °F) above the design average coolant fluid temperature at the condenser outlet.

(F) Each period in which the pilot flame of a flare is absent.

(G) Each occurrence when there is a change in the location at which the vent stream is introduced into the flame zone of a boiler or process heater as required by §61.349(a)(2)(i)(C) of this subpart.

(H) Each occurrence when the carbon in a carbon adsorber system that is regenerated directly on site in the control device is not regenerated at the predetermined carbon bed regeneration time.

(I) Each occurrence when the carbon in a carbon adsorber system that is not regenerated directly on site in the control device is not replaced at the predetermined interval specified in §61.354(c) of this subpart.

(J) Each 3-hour period of operation during which the parameters monitored are outside the range of values specified in §61.349(a)(2)(iv)(C), or any other periods specified by the Administrator for a control device subject to the requirements of §61.349(a)(2)(iv).

(v) For a cover and closed-vent system monitored in accordance with §61.354(g), the owner or operator shall submit a report quarterly to the Administrator that identifies any period in which the pressure in the waste management unit is equal to or greater than atmospheric pressure.

(8) Beginning one year after the date that the equipment necessary to comply with these standards has been certified in accordance with paragraph (d)(1) of this section, the owner or operator shall submit annually to the Administrator a report that summarizes all inspections required by §§61.342 through 61.354 during which detectable emissions are measured or a problem (such as a broken seal, gap or other problem) that could result in benzone emissions is identified, including information about the repairs or corrective action taken.

(e) An owner or operator electing to comply with the provisions of §§61.351 or 61.352 of this subpart shall notify the Administrator of the alternative standard selected in the report required under §61.07 or §61.10 of this part.

(f) An owner or operator who elects to install and operate the control equipment in §61.351 of this subpart shall comply with the reporting requirements in 40 CFR 60.115b.

(g) An owner or operator who elects to install and operate the control equipment in §61.352 of this subpart shall submit initial and quarterly reports that identify all seal gap measurements, as required in 40 CFR 60.693–2(a), that are outside the prescribed limits.

[55 FR 8346, Mar. 7 1990; 55 FR 12444, Apr. 3, 1990, as amended at 55 FR 37231, Sept. 10, 1990; 58 FR 3105, Jan. 7, 1993; 65 FR 62161, Oct. 17, 2000]

§ 61.358 Delegation of authority.

(a) In delegating implementation and enforcement authority to a State under section 112(d) of the Clean Air Act, the authorities contained in paragraph (b) of this section shall be retained by the Administrator and not transferred to a State.

(b) Alternative means of emission limitation under §61.353 of this subpart will not be delegated to States.

§ 61.359 [Reserved]

Appendix A to Part 61

APPENDIX A

National Emission Standards for Hazardous Air Pollutants

Compliance Status Information

I. SOURCE REPORT

INSTRUCTIONS: Owners or operators of sources of hazardous pollutants subject to the National Emission Standards for Hazardous Air Pollutants are required to submit the information contained in Section I to the appropriate U.S. Environmental Protection Agency Regional Office prior to 90 days after the effective date of any standards or amendments which require the submission of such information.

A list of regional offices is provided in §61.04.

A. SOURCE INFORMATION

1. Identification/Location - Indicate the name and address of each source.

1 2 Region | 3 4 State | 5 8 County | 9 13 Source Number | 0 0 0 14 16 | 0 0 17 18 | 1 19

20 22 AQCR # | 23 26 City Code | 27 Source Name 46

47 Street Address (Location of Plant) 66 | 80

Dup 1-18 19 | 20 City Name 34 | State 35 39

40 State Regis. Number 54 | 55 58 NEDS X Ref.

59 SIC 62 | FF 64 | 8 A/P 65 | 77 79 Staff | 80

Dup 1-18 5 19 | CS 30 | STP 31 | EC 49 | 80

2. Contact - Indicate the name and telephone number of the owner or operator or other responsible official whom EPA may contact concerning this report.

View or download PDF

Dup 1-18 4 1 19 20 | 21 Name 43

44 46 Area Code | 47 - Number 54 | 80

3. Source Description - Briefly state the nature of the source (e.g., "Chlor-alkali Plant" or "Machine Shop").

Dup 1-18 4 2 19 20 | 21 Description 50

51 Continued 79 | 80

4. Alternative Mailing Address - Indicate an alternative mailing address if correspondence is to be directed to a location different than that specified above.

Dup 1-18 4 3 19 20 | 21 Number Street or Box Number 45 | 80

Dup 1-18 4 4 19 20 | 21 City 35 | 37 38 State | 41 Zip 44 | 80

5. Compliance Status - The emissions from this source ___ can ___ cannot meet the emission limitations contained in the National Emission Standards on or prior to 90 days after the effective date of any standards or amendments which require the submission of such information.

Signature of Owner, Operator or Other Responsible Official

NOTE: If the emissions from the source will exceed those limits set by the National Emission Standards for Hazardous Air Pollutants, the source will be in violation and subject to Federal enforcement actions unless granted a waiver of compliance by the Administrator of the U.S. Environmental Protection Agency. The information needed for such waivers is listed in Section II of this form.

B. PROCESS INFORMATION. Part B should be completed separately for each point of emission for each hazardous pollutant. [Sources subject to 61.22(1) may omit number 4. below.]

Dup 1-13 14 16 | 0 0 17 18 | 5 19 | 20 SCC 27 | 28 29 NEDS X Ref | 30 LS | 31 SIP

View or download PDF

1. Pollutant Emitted - Indicate the type of hazardous pollutant emitted by the process. Indicate "AS" for asbestos, "BE" for beryllium, or "HG" for mercury.

32 33 Pollutant | 34 Regulation 48 | 49 EC

2. Process Description - Provide a brief description of each process (e.g., "hydrogen end box" in a mercury chlor-alkali plant, "grinding machine" in a beryllium machine shop). Use additional sheets if necessary.

50 Process Description 74 | 80

Dup 1-18 6 1 19 20 21 50

51 79 80

Dup 1-18 6 2 19 20 21 50

51 79 80

3. Amount of Pollutant - Indicate the average weight of the hazardous material named in Item 1 which enters the process in pounds per month (based on the previous twelve months of operation).

Dup 1-18 6 3 19 20 | 21 27 | lbs./mo. 29 36 | 80

4. Control Devices
a. Indicate the type of pollution control devices, if any, used to reduce the emissions from the process (e.g., venturi scrubber, baghouse, wet cyclone) and the estimated percent of the pollutant which the device removes from the process gas stream.

Dup 1-18 6 4 19 20 | PRIMARY CONTROL DEVICE: 21 43

45 Primary Device Name 64 | 66 70 Percent Removal Efficiency | 72 79

80

View or download PDF

Dup 1-18 6 5 19 20 | SECONDARY CONTROL DEVICES: 21 45

47 Secondary Device Name 64 | 66 70 Percent Removal Efficiency | % EFFIC. 72 79 | 80

b. Asbestos Emission Control Devices Only
i. If a baghouse is specified in Item 4a, give the following information:

- The air flow permeability in cubic feet per minute per square foot of fabric area.

  Air flow permeability = _____ cfm/ft^2

- The pressure drop in inches water gauge across the filter at which the baghouse is operated.

  Operating pressure drop = _____ inches w.g.

- If the baghouse material contains synthetic fill yarn, check whether this material is / / spun / / or not spun.

- If the baghouse utilizes a felted fabric, give the minimum thickness in inches and the density in ounces per square yard.

  Thickness = _____ inches Density = _____ oz/yd^2

ii. If a wet collection device is specified in Item 4a, give the designed unit contacting energy in inches water gauge.

- Unit contacting energy = _____ inches w.g.

C. DISPOSAL OF ASBESTOS-CONTAINING WASTES. Part C should be completed separately for each asbestos-containing waste generation operation arising from sources subject to §61.22(a), (c), (e), and (h).

Dup 1-13 0 0 14 16 17 18 | 5 19 | 20 SCC 27 | 28 29 NEDS X Ref | 30 CS | 31 SIP

A B 32 33 Pollutant | 34 Regulation 48 | 49 EC

View or download PDF

1. Waste Generation - Provide a brief description of each process that generates asbestos-containing waste (e.g. disposal of control device wastes).

50 Process Description 79 80

2. Asbestos Concentration - Indicate the average percentage asbestos content of these materials.

Dup 1-18 6 1 (19–20) ASBESTOS CONCENTRATION: (21–43) (45–48)

% (50) 80

3. Amount of Wastes - Indicate the average weight of asbestos-containing wastes disposed of, measured in kg/day.

Dup 1-18 6 2 (19–20) (21–27) kg/day (29–34) 80

4. Control Methods - Indicate the emission control methods used in all stages of waste disposal, from collection, processing, and packaging to transporting and deposition.

Dup 1-18 6 3 (19–20) Primary Control Method (21–43)

45 79 80

Dup 1-18 6 4 (19–20) (21–50)

51 79 80

5. Waste Disposal - Indicate the type of disposal site (sanitary landfill, open, covered) or incineration site (municipal, private) where the waste is disposed of and who operates the site (company, private, municipal). State the name and location of the site (closest city or town, county, state).

Dup 1-18 6 5 (19–20) TYPE OF SITE: (21–33) (35–50)

51 79 80

View or download PDF

Dup 1-18 6 6 (19–20) OPERATOR: (21–29) (31–50)

51 79 80

Dup 1-18 6 7 (19–20) LOCATION: (21–29)

31 70

71 79 80

D. WASTE DISPOSAL SITES. Part D should be completed separately for each asbestos waste disposal site subject to section 61.22(1).

Dup 1-13 (14–16) 0 0 (17–18) 5 (19) (20–27) SCC (28–29) NEDS X Ref (30) CS (31) SIP

A B (32–33) (34–48) Regulation (49) EC
Pollutant

WASTE DISPOSAL SITE
50 68 80

1. Description - Provide a brief description of the site, including its size and configuration, and the distance to the closest city or town, closest residence, and closest primary road.

Dup 1-18 6 1 (19–20) SITE DESCRIPTION (21–37) (39–50)

51 79 80

Dup 1-18 6 2 (19–20) DISTANCE: (21–29) TOWN: (30–34) (36–40) K M (42–43)

RESIDENCE: (45–54) (56–60) K M (62–63) ROAD: (65–69) (71–75)

K M (77–78) 80

View or download PDF

2. Inactivation - After the site is inactivated, indicate the method or methods used to comply with the standard and send a list of the actions that will be undertaken to maintain the inactivated site.

Dup 1-18 6 8 COMPLIANCE METHOD/INACTIVE SITE:
19 20 21 52

54 79 80

View or download PDF

II. Waiver Requests

A. *Waiver of Compliance.* Owners or operators of sources unable to operate in compliance with the National Emission Standards for Hazardous Air Pollutants prior to 90 days after the effective date of any standards or amendments which require the submission of such information may request a waiver of compliance from the Administrator of the U.S. Environmental Protection Agency for the time period necessary to install appropriate control devices or make modifications to achieve compliance. The Administrator may grant a waiver of compliance with the standard for a period not exceeding two years from the effective date of the hazardous pollutant standards, if he finds that such period is necessary for the installation of controls and that steps will be taken during the period of the waiver to assure that the health of persons will be protected from imminent endangerment.

The report information provided in Section I must accompany this application. Applications should be sent to the appropriate EPA regional office.

1. *Processes Involved* —Indicate the process or processes emitting hazardous pollutants to which emission controls are to be applied.

2. *Controls*

a. Describe the proposed type of control device to be added or modification to be made to the process to reduce the emission of hazardous pollutants to an acceptable level. (Use additional sheets if necessary.)

b. Describe the measures that will be taken during the waiver period to assure that the health of persons will be protected from imminent endangerment. (Use additional sheets if necessary.)

3. *Increments of Progress* —Specify the dates by which the following increments of progress will be met.

Date by which contracts for emission control systems or process modifications will be awarded; or date by which orders will be issued for the purchase of the component parts to accomplish emission control or process modification.

Dup 1-16 0 1 7
17 19 53 54 55 60 61 MO/DY/YR 66 80

Date of initiation of on-site construction or installation of emission control equipment or process change.

Dup 1-16 0 2 7
17 19 53 54 55 60 61 MO/DY/YR 66 80

Date by which on-site construction or installation of emission control equipment or process modification is to be completed.

Dup 1-16 0 3 7
17 19 53 54 55 60 61 MO/DY/YR 66 80

Date by which final compliance is to be achieved.

Dup 1-16 0 4 7
17 19 53 54 55 60 61 MO/DY/YR 66 80

View or download PDF

B. *Waiver of Emission Tests.* A waiver of emission testing may be granted to owners or operators of sources subject to emmission testing if, in the judgment of the Administrator of the Environmental Protection Agency the emissions from the source comply with the appropriate standard or if the owners or operators of the source have requested a waiver of compliance or have been granted a waiver of compliance.

This application should accompany the report information provided in Section I.

1. *Reason* —State the reasons for requesting a waiver of emission testing. If the reason stated is that the emissions from the source are within the prescribed limits, documentation of this condition must be attached.

_____
_____
DateSignature of the owner or operator

(Sec. 114, of the Clean Air Act as amended (42 U.S.C. 7414))

[40 FR 48303, Oct. 14, 1975, as amended at 43 FR 8800, Mar. 3, 1978; 50 FR 46295, Sept. 9, 1985]

Appendix B to Part 61—Test Methods

Method 101—Determination of particulate and gaseous mercury emissions from chlor-alkali plants (air streams)

Method 101A—Determination of particulate and gaseous mercury emissions from sewage sludge incinerators

Method 102—Determination of particulate and gaseous mercury emissions from chlor-alkali plants (hydrogen streams)

Method 103—Beryllium screening method

Method 104—Determination of beryllium emissions from stationary sources

Method 105—Determination of mercury in wastewater treatment plant sewage sludges

Method 106—Determination of vinyl chloride emissions from stationary sources

Method 107—Determination of vinyl chloride content of in-process wastewater samples, and vinyl chloride content of polyvinyl chloride resin slurry, wet cake, and latex samples

Method 107A—Determination of vinyl chloride content of solvents, resin-solvent solution, polyvinyl chloride resin, resin slurry, wet resin, and latex samples

Method 108—Determination of particulate and gaseous arsenic emissions

Method 108A—Determination of arsenic content in ore samples from nonferrous smelters

Method 108B—Determination of arsenic content in ore samples from nonferrous smelters

Method 108C—Determination of arsenic content in ore samples from nonferrous smelters (molybdenum blue photometric procedure)

Method 111—Determination of Polonium—210 emissions from stationary sources

Method 101—Determination of Particulate and Gaseous Mercury Emissions From Chlor-Alkali Plants (Air Streams)

Note: This method does not include all of the specifications (*e.g.,* equipment and supplies) and procedures (*e.g.,* sampling and analytical) essential to its performance. Some material is incorporated by reference from methods in appendix A to 40 CFR part 60. Therefore, to obtain reliable results, persons using this method should have a thorough knowledge of at least the following additional test methods: Method 1, Method 2, Method 3, and Method 5.

1.0 Scope and Application

1.1 Analytes.

Analyte	CAS No.	Sensitivity
Mercury (Hg)	7439–97–6	Dependent upon recorder and spectrophotometer.

1.2 Applicability. This method is applicable for the determination of Hg emissions, including both particulate and gaseous Hg, from chlor-alkali plants and other sources (as specified in the regulations) where the carrier-gas stream in the duct or stack is principally air.

1.3 Data Quality Objectives. Adherence to the requirements of this method will enhance the quality of the data obtained from air pollutant sampling methods.

2.0 Summary of Method

Particulate and gaseous Hg emissions are withdrawn isokinetically from the source and collected in acidic iodine monochloride (ICl) solution. The Hg collected (in the mercuric form) is reduced to elemental Hg, which is then aerated from the solution into an optical cell and measured by atomic absorption spectrophotometry.

3.0 Definitions[Reserved]

4.0 Interferences

4.1 Sample Collection. Sulfur dioxide (SO_2) reduces ICl and causes premature depletion of the ICl solution.

4.2 Sample Analysis.

4.2.1 ICl concentrations greater than 10^{-4}molar inhibit the reduction of the Hg (II) ion in the aeration cell.

4.2.2 Condensation of water vapor on the optical cell windows causes a positive interference.

5.0 Safety

5.1 Disclaimer. This method may involve hazardous materials, operations, and equipment. This test method does not purport to address all of the safety problems associated with its use. It is the responsibility of the user of this test method to establish appropriate safety and health practices and determine the applicability of regulatory limitations prior to performing this test method.

5.2 Corrosive Reagents. The following reagents are hazardous. Personal protective equipment and safe procedures are useful in preventing chemical splashes. If contact occurs, immediately flush with copious amounts of water for at least 15 minutes. Remove clothing under shower and decontaminate. Treat residual chemical burn as thermal burn.

5.2.1 Hydrochloric Acid (HCl). Highly toxic and corrosive. Causes severe damage to tissues. Vapors are highly irritating to eyes, skin, nose, and lungs, causing severe damage. May cause bronchitis, pneumonia, or edema of lungs. Exposure to concentrations of 0.13 to 0.2 percent can be lethal to humans in a few minutes. Provide ventilation to limit exposure. Reacts with metals, producing hydrogen gas.

5.2.2 Nitric Acid (HNO_3). Highly corrosive to eyes, skin, nose, and lungs. Vapors cause bronchitis, pneumonia, or edema of lungs. Reaction to inhalation may be delayed as long as 30 hours and still be fatal. Provide ventilation to limit exposure. Strong oxidizer. Hazardous reaction may occur with organic materials such as solvents.

5.2.3 Sulfuric Acid (H_2SO_4). Rapidly destructive to body tissue. Will cause third degree burns. Eye damage may result in blindness. Inhalation may be fatal from spasm of the larynx, usually within 30 minutes. 3 mg/m^3 will cause lung damage. 1 mg/m^3 for 8 hours will cause lung damage or, in higher concentrations, death. Provide ventilation to limit inhalation. Reacts violently with metals and organics.

6.0 Equipment and Supplies.

6.1 Sample Collection. A schematic of the sampling train used in performing this method is shown in Figure 101–1; it is similar to the Method 5 sampling train. The following items are required for sample collection:

6.1.1 Probe Nozzle, Pitot Tube, Differential Pressure Gauge, Metering System, Barometer, and Gas Density Determination Equipment. Same as Method 5, Sections 6.1.1.1, 6.1.1.3, 6.1.1.4, 6.1.1.9, 6.1.2, and 6.1.3, respectively.

6.1.2 Probe Liner. Borosilicate or quartz glass tubing. A heating system capable of maintaining a gas temperature of 120 ±14 °C (248 ±25 °F) at the probe exit during sampling may be used to prevent water condensation.

Note: Do not use metal probe liners.

6.1.3 Impingers. Four Greenburg-Smith impingers connected in series with leak-free ground glass fittings or any similar leak-free noncontaminating fittings. For the first, third, and fourth impingers, impingers that are modified by replacing the tip with a 13-mm ID (0.5-in.) glass tube extending to 13 mm (0.5 in.) from the bottom of the flask may be used.

6.1.4 Acid Trap. Mine Safety Appliances air line filter, Catalog number 81857, with acid absorbing cartridge and suitable connections, or equivalent.

6.2 Sample Recovery. The following items are needed for sample recovery:

6.2.1 Glass Sample Bottles. Leakless, with Teflon-lined caps, 1000- and 100-ml.

6.2.2 Graduated Cylinder. 250-ml.

6.2.3 Funnel and Rubber Policeman. To aid in transfer of silica gel to container; not necessary if silica gel is weighed in the field.

6.2.4 Funnel. Glass, to aid in sample recovery.

6.3 Sample Preparation and Analysis. The following items are needed for sample preparation and analysis:

6.3.1 Atomic Absorption Spectrophotometer. Perkin-Elmer 303, or equivalent, containing a hollow-cathode mercury lamp and the optical cell described in Section 6.3.2.

6.3.2 Optical Cell. Cylindrical shape with quartz end windows and having the dimensions shown in Figure 101–2. Wind the cell with approximately 2 meters (6 ft) of 24-gauge Nichrome wire, or equivalent, and wrap with fiberglass insulation tape, or equivalent; do not let the wires touch each other.

6.3.3 Aeration Cell. Constructed according to the specifications in Figure 101–3. Do not use a glass frit as a substitute for the blown glass bubbler tip shown in Figure 101–3.

6.3.4 Recorder. Matched to output of the spectrophotometer described in Section 6.3.1.

6.3.5 Variable Transformer. To vary the voltage on the optical cell from 0 to 40 volts.

6.3.6 Hood. For venting optical cell exhaust.

6.3.7 Flow Metering Valve.

6.3.8 Rate Meter. Rotameter, or equivalent, capable of measuring to within 2 percent a gas flow of 1.5 liters/min (0.053 cfm).

6.3.9 Aeration Gas Cylinder. Nitrogen or dry, Hg-free air, equipped with a single-stage regulator.

6.3.10 Tubing. For making connections. Use glass tubing (ungreased ball and socket connections are recommended) for all tubing connections between the solution cell and the optical cell; do not use Tygon tubing, other types of flexible tubing, or metal tubing as substitutes. Teflon, steel, or copper tubing may be used between the nitrogen tank and flow metering valve (Section 6.3.7), and Tygon, gum, or rubber tubing between the flow metering valve and the aeration cell.

6.3.11 Flow Rate Calibration Equipment. Bubble flow meter or wet-test meter for measuring a gas flow rate of 1.5 ±0.1 liters/min (0.053 ±0.0035 cfm).

6.3.12 Volumetric Flasks. Class A with penny head standard taper stoppers; 100-, 250-, 500-, and 1000-ml.

6.3.13 Volumetric Pipets. Class A; 1-, 2-, 3-, 4-, and 5-ml.

6.3.14 Graduated Cylinder. 50-ml.

6.3.15 Magnetic Stirrer. General-purpose laboratory type.

6.3.16 Magnetic Stirring Bar. Teflon-coated.

6.3.17 Balance. Capable of weighing to ±0.5 g.

6.3.18 Alternative Analytical Apparatus. Alternative systems are allowable as long as they meet the following criteria:

6.3.18.1 A linear calibration curve is generated and two consecutive samples of the same aliquot size and concentration agree within 3 percent of their average.

6.3.18.2 A minimum of 95 percent of the spike is recovered when an aliquot of a source sample is spiked with a known concentration of Hg (II) compound.

6.3.18.3 The reducing agent should be added after the aeration cell is closed.

6.3.18.4 The aeration bottle bubbler should not contain a frit.

6.3.18.5 Any Tygon tubing used should be as short as possible and conditioned prior to use until blanks and standards yield linear and reproducible results.

6.3.18.6 If manual stirring is done before aeration, it should be done with the aeration cell closed.

6.3.18.7 A drying tube should not be used unless it is conditioned as the Tygon tubing above.

7.0 Reagents and Standards

Unless otherwise indicated, all reagents must conform to the specifications established by the Committee on Analytical Reagents of the American Chemical Society; where such specifications are not available, use the best available grade.

7.1 Sample Collection. The following reagents are required for sample collection:

7.1.1 Water. Deionized distilled, to conform to ASTM D 1193–77 or 91 (incorporated by reference—see §61.18), Type 1. If high concentrations of organic matter are not expected to be present, the analyst may eliminate the $KMnO_4$test for oxidizable organic matter. Use this water in all dilutions and solution preparations.

7.1.2 Nitric Acid, 50 Percent (v/v). Mix equal volumes of concentrated $HNO_3$and water, being careful to add the acid to the water slowly.

7.1.3 Silica Gel. Indicating type, 6- to 16-mesh. If previously used, dry at 175 °C (350 °F) for 2 hours. The tester may use new silica gel as received.

7.1.4 Potassium Iodide (KI) Solution, 25 Percent. Dissolve 250 g of KI in water, and dilute to 1 liter.

7.1.5 Iodine Monochloride Stock Solution, 1.0 M. To 800 ml of 25 percent KI solution, add 800 ml of concentrated HCl. Cool to room temperature. With vigorous stirring, slowly add 135 g of potassium iodate (KIO_3), and stir until all free iodine has dissolved. A clear orange-red solution occurs when all the KIO_3has been added. Cool to room temperature, and dilute to 1800 ml with water. Keep the solution in amber glass bottles to prevent degradation.

7.1.6 Absorbing Solution, 0.1 M ICl. Dilute 100 ml of the 1.0 M ICl stock solution to 1 liter with water. Keep the solution in amber glass bottles and in darkness to prevent degradation. This reagent is stable for at least two months.

7.2 Sample Preparation and Analysis. The following reagents and standards are required for sample preparation and analysis:

7.2.1 Reagents.

7.2.1.1 Tin (II) Solution. Prepare fresh daily, and keep sealed when not being used. Completely dissolve 20 g of tin (II) chloride (or 25 g of tin (II) sulfate) crystals (Baker Analyzed reagent grade or any other brand that will give a clear solution) in 25 ml of concentrated HCl. Dilute to 250 ml with water. Do not substitute HNO_3, H_2SO_4, or other strong acids for the HCl.

7.2.1.2 Sulfuric Acid, 5 Percent (v/v). Dilute 25 ml of concentrated $H_2SO_4$to 500 ml with water.

7.2.2 Standards

7.2.2.1 Hg Stock Solution, 1 mg Hg/ml. Prepare and store all Hg standard solutions in borosilicate glass containers. Completely dissolve 0.1354 g of Hg (II) chloride in 75 ml of water in a 100-ml glass volumetric flask. Add 10 ml of concentrated HNO_3, and adjust the volume to exactly 100 ml with water. Mix thoroughly. This solution is stable for at least one month.

7.2.2.2 Intermediate Hg Standard Solution, 10 µg Hg/ml. Prepare fresh weekly. Pipet 5.0 ml of the Hg stock solution (Section 7.2.2.1) into a 500-ml glass volumetric flask, and add 20 ml of the 5 percent H_2SO_4solution. Dilute to exactly 500 ml with water. Thoroughly mix the solution.

7.2.2.3 Working Hg Standard Solution, 200 ng Hg/ml. Prepare fresh daily. Pipet 5.0 ml of the intermediate Hg standard solution (Section 7.2.2.2) into a 250-ml volumetric glass flask. Add 10 ml of the 5 percent $H_2SO_4$and 2 ml of the 0.1 M ICl absorbing solution taken as a blank (Section 8.7.4.3), and dilute to 250 ml with water. Mix thoroughly.

8.0 Sample Collection, Preservation, Transport, and Storage

Because of the complexity of this method, testers should be trained and experienced with the test procedures to ensure reliable results. Since the amount of Hg that is collected generally is small, the method must be carefully applied to prevent contamination or loss of sample.

8.1 Pretest Preparation. Follow the general procedure outlined in Method 5, Section 8.1, except omit Sections 8.1.2 and 8.1.3.

8.2 Preliminary Determinations. Follow the general procedure outlined in Method 5, Section 8.2, with the exception of the following:

8.2.1 Select a nozzle size based on the range of velocity heads to assure that it is not necessary to change the nozzle size in order to maintain isokinetic sampling rates below 28 liters/min (1.0 cfm).

8.2.2 Perform test runs such that samples are obtained over a period or periods that accurately determine the maximum emissions that occur in a 24-hour period. In the case of cyclic operations, run sufficient tests for the accurate determination of the emissions that occur over the duration of the cycle. A minimum sample time of 2 hours is recommended. In some instances, high Hg or high SO_2concentrations make it impossible to sample for the desired minimum time. This is indicated by reddening (liberation of free iodine) in the first impinger. In these cases, the sample run may be divided into two or more subruns to ensure that the absorbing solution is not depleted.

8.3 Preparation of Sampling Train.

8.3.1 Clean all glassware (probe, impingers, and connectors) by rinsing with 50 percent HNO_3, tap water, 0.1 M ICl, tap water, and finally deionized distilled water. Place 100 ml of 0.1 M ICl in each of the first three impingers. Take care to prevent the absorbing solution from contacting any greased surfaces. Place approximately 200 g of preweighed silica gel in the fourth impinger. More silica gel may be used, but care should be taken to ensure that it is not entrained and carried out from the impinger during sampling. Place the silica gel container in a clean place for later use in the sample recovery. Alternatively, determine and record the weight of the silica gel plus impinger to the nearest 0.5 g.

8.3.2 Install the selected nozzle using a Viton A O-ring when stack temperatures are less than 260 °C (500 °F). Use a fiberglass string gasket if temperatures are higher. See APTD–0576 (Reference 3 in Method 5) for details. Other connecting systems using either 316 stainless steel or Teflon ferrules may be used. Mark the probe with heat-resistant tape or by some other method to denote the proper distance into the stack or duct for each sampling point.

8.3.3 Assemble the train as shown in Figure 101–1, using (if necessary) a very light coat of silicone grease on all ground glass joints. Grease only the outer portion (see APTD–0576) to avoid the possibility of contamination by the silicone grease.

Note: An empty impinger may be inserted between the third impinger and the silica gel to remove excess moisture from the sample stream.

8.3.4 After the sampling train has been assembled, turn on and set the probe heating system, if applicable, at the desired operating temperature. Allow time for the temperatures to stabilize. Place crushed ice around the impingers.

8.4 Leak-Check Procedures. Follow the leak-check procedures outlined in Method 5, Section 8.4.

8.5 Sampling Train Operation. Follow the general procedure outlined in Method 5, Section 8.5. For each run, record the data required on a data sheet such as the one shown in Figure 101–4.

8.6 Calculation of Percent Isokinetic. Same as Method 5, Section 8.6.

8.7 Sample Recovery. Begin proper cleanup procedure as soon as the probe is removed from the stack at the end of the sampling period.

8.7.1 Allow the probe to cool. When it can be safely handled, wipe off any external particulate matter near the tip of the probe nozzle, and place a cap over it. Do not cap off the probe tip tightly while the sampling train is cooling. Capping would create a vacuum and draw liquid out from the impingers.

8.7.2 Before moving the sampling train to the cleanup site, remove the probe from the train, wipe off the silicone grease, and cap the open outlet of the probe. Be careful not to lose any condensate that might be present. Wipe off the silicone grease from the impinger. Use either ground-glass stoppers, plastic caps, or serum caps to close these openings.

8.7.3 Transfer the probe and impinger assembly to a cleanup area that is clean, protected from the wind, and free of Hg contamination. The ambient air in laboratories located in the immediate vicinity of Hg-using facilities is not normally free of Hg contamination.

8.7.4 Inspect the train before and during disassembly, and note any abnormal conditions. Treat the samples as follows.

8.7.4.1 Container No. 1 (Impingers and Probe).

8.7.4.1.1 Using a graduated cylinder, measure the liquid in the first three impingers to within 1 ml. Record the volume of liquid present (*e.g.,* see Figure 5–6 of Method 5). This information is needed to calculate the moisture content of the effluent gas. (Use only glass storage bottles and graduated cylinders that have been precleaned as in Section 8.3.1) Place the contents of the first three impingers into a 1000-ml glass sample bottle.

8.7.4.1.2 Taking care that dust on the outside of the probe or other exterior surfaces does not get into the sample, quantitatively recover the Hg (and any condensate) from the probe nozzle, probe fitting, and probe liner as follows: Rinse these components with two 50-ml portions of 0.1 M ICl. Next, rinse the probe nozzle, fitting and liner, and each piece of connecting glassware between the probe liner and the back half of the third impinger with a maximum of 400 ml of water. Add all washings to the 1000-ml glass sample bottle containing the liquid from the first three impingers.

8.7.4.1.3 After all washings have been collected in the sample container, tighten the lid on the container to prevent leakage during shipment to the laboratory. Mark the height of the liquid to determine later whether leakage occurred during transport. Label the container to identify clearly its contents.

8.7.4.2 Container No. 2 (Silica Gel). Same as Method 5, Section 8.7.6.3.

8.7.4.3 Container No. 3 (Absorbing Solution Blank). Place 50 ml of the 0.1 M ICl absorbing solution in a 100-ml sample bottle. Seal the container. Use this blank to prepare the working Hg standard solution (Section 7.2.2.3).

9.0 Quality Control

9.1 Miscellaneous Quality Control Measures.

Section	Quality control measure	Effect
8.4 10.2	Sampling equipment leak-checks and calibration	Ensure accuracy and precision of sampling measurements.
10.5, 10.6	Spectrophotometer calibration	Ensure linearity of spectrophotometer response to standards.
11.3.3	Check for matrix effects	Eliminate matrix effects.

9.2 Volume Metering System Checks. Same as Method 5, Section 9.2.

10.0 Calibration and Standardizations

Note: Maintain a laboratory log of all calibrations.

10.1 Before use, clean all glassware, both new and used, as follows: brush with soap and tap water, liberally rinse with tap water, soak for 1 hour in 50 percent HNO_3, and then rinse with deionized distilled water.

10.2 Sampling Equipment. Calibrate the sampling equipment according to the procedures outlined in the following sections of Method 5: Section 10.1 (Probe Nozzle), Section 10.2 (Pitot Tube Assembly), Section 10.3 (Metering System), Section 10.5 (Temperature Sensors), Section 10.6 (Barometer).

10.3 Aeration System Flow Rate Meter. Assemble the aeration system as shown in Figure 101–5. Set the outlet pressure on the aeration gas cylinder regulator to a minimum pressure of 500 mm Hg (10 psi), and use the flow metering valve and a bubble flowmeter or wet-test meter to obtain a flow rate of 1.5 ±0.1 liters/min (0.053 ±0.0035 cfm) through the aeration cell. After the calibration of the aeration system flow rate meter is complete, remove the bubble flowmeter from the system.

10.4 Optical Cell Heating System. Using a 50-ml graduated cylinder, add 50 ml of water to the bottle section of the aeration cell, and attach the bottle section to the bubbler section of the cell. Attach the aeration cell to the optical cell and while aerating at 1.5 ±0.1 liters/min (0.053 ±0.0035 cfm), determine the minimum variable transformer setting necessary to prevent condensation of moisture in the optical cell and in the connecting tubing. (This setting should not exceed 20 volts.)

10.5 Spectrophotometer and Recorder.

10.5.1 The Hg response may be measured by either peak height or peak area.

Note: The temperature of the solution affects the rate at which elemental Hg is released from a solution and, consequently, it affects the shape of the absorption curve (area) and the point of maximum absorbance (peak height). Therefore, to obtain reproducible results, bring all solutions to room temperature before use.

10.5.2 Set the spectrophotometer wavelength at 253.7 nm, and make certain the optical cell is at the minimum temperature that will prevent water condensation. Then set the recorder scale as follows: Using a 50-ml graduated cylinder, add 50 ml of water to the aeration cell bottle. Add three drops of Antifoam B to the bottle, and then pipet 5.0 ml of the working Hg standard solution into the aeration cell.

Note: Always add the Hg-containing solution to the aeration cell after the 50 ml of water.

10.5.3 Place a Teflon-coated stirring bar in the bottle. Before attaching the bottle section to the bubbler section of the aeration cell, make certain that (1) the aeration cell exit arm stopcock (Figure 101–3) is closed (so that Hg will not prematurely enter the optical cell when the reducing agent is being added) and (2) there is no flow through the bubbler. If conditions (1) and (2) are met, attach the bottle section to the bubbler section of the aeration cell. Pipet 5 ml of tin (II) reducing solution into the aeration cell through the side arm, and immediately stopper the side arm. Stir the solution for 15 seconds, turn on the recorder, open the aeration cell exit arm stopcock, and immediately initiate aeration with continued stirring. Determine the maximum absorbance of the standard, and set this value to read 90 percent of the recorder full scale.

10.6 Calibration Curve.

10.6.1 After setting the recorder scale, repeat the procedure in Section 10.5 using 0.0-, 1.0-, 2.0-, 3.0-, 4.0-, and 5.0-ml aliquots of the working standard solution (final amount of Hg in the aeration cell is 0, 200, 400, 600, 800, and 1000 ng, respectively). Repeat this procedure on each aliquot size until two consecutive peaks agree within 3 percent of their average value.

Note: To prevent Hg carryover from one sample to another, do not close the aeration cell from the optical cell until the recorder pen has returned to the baseline.)

10.6.2 It should not be necessary to disconnect the aeration gas inlet line from the aeration cell when changing samples. After separating the bottle and bubbler sections of the aeration cell, place the bubbler section into a 600-ml beaker containing approximately 400 ml of water. Rinse the bottle section of the aeration cell with a stream of water to remove all traces of the tin (II) reducing agent. Also, to prevent the loss of Hg before aeration, remove all traces of the reducing agent between samples by washing with water. It will be necessary, however, to wash the aeration cell parts with concentrated HCl if any of the following conditions occur: (1) A white film appears on any inside surface of the aeration cell, (2) the calibration curve changes suddenly, or (3) the replicate samples do not yield reproducible results.

10.6.3 Subtract the average peak height (or peak area) of the blank (0.0-ml aliquot)—which must be less than 2 percent of recorder full scale—from the averaged peak heights of the 1.0-, 2.0-, 3.0-, 4.0-, and 5.0-ml aliquot standards. If the blank absorbance is greater than 2 percent of full-scale, the probable cause is Hg contamination of a reagent or carry-over of Hg from a previous sample. Prepare the calibration curve by plotting the corrected peak height of each standard solution versus the corresponding final total Hg weight in the aeration cell (in ng), and draw the best fit straight line. This line should either pass through the origin or pass through a point no further from the origin than ±2 percent of the recorder full scale. If the line does not pass through or very near to the origin, check for nonlinearity of the curve and for incorrectly prepared standards.

11.0 Analytical Procedure

11.1 Sample Loss Check. Check the liquid level in each container to see whether liquid was lost during transport. If a noticeable amount of leakage occurred, either void the sample or use methods subject to the approval of the Administrator to account for the losses.

11.2 Sample Preparation. Treat each sample as follows:

11.2.1 Container No. 1 (Impingers and Probe). Carefully transfer the contents of Container No. 1 into a 1000-ml volumetric flask, and adjust the volume to exactly 1000 ml with water.

11.2.2 Dilutions. Pipet a 2-ml aliquot from the diluted sample from Section 11.2.1 into a 250-ml volumetric flask. Add 10 ml of 5 percent H_2SO_4, and adjust the volume to exactly 250 ml with water. This solution is stable for at least 72 hours.

Note: The dilution factor will be 250/2 for this solution.

11.3 Analysis. Calibrate the analytical equipment and develop a calibration curve as outlined in Sections 10.3 through 10.6.

11.3.1 Mercury Samples. Repeat the procedure used to establish the calibration curve with an appropriately sized aliquot (1 to 5 ml) of the diluted sample (from Section 11.2.2) until two consecutive peak heights agree within 3 percent of their average value. The peak maximum of an aliquot (except the 5-ml aliquot) must be greater than 10 percent of the recorder full scale. If the peak maximum of a 1.0-ml aliquot is off scale on the recorder, further dilute the original source sample to bring the Hg concentration into the calibration range of the spectrophotometer.

11.3.2 Run a blank and standard at least after every five samples to check the spectrophotometer calibration. The peak height of the blank must pass through a point no further from the origin than ±2 percent of the recorder full scale. The difference between the measured concentration of the standard (the product of the corrected peak height and the reciprocal of the least squares slope) and the actual concentration of the standard must be less than 7 percent, or recalibration of the analyzer is required.

11.3.3 Check for Matrix Effects (optional). Use the Method of Standard Additions as follows to check at least one sample from each source for matrix effects on the Hg results. The Method of Standard Additions procedures described on pages 9–4 and 9–5 of the section entitled “General Information” of the Perkin Elmer Corporation Atomic Absorption Spectrophotometry Manual, Number 303–0152 (Reference 16 in Section 16.0) are recommended. If the results of the Method of Standard Additions procedure used on the single source sample do not agree to within ±5 percent of the value obtained by the routine atomic absorption analysis, then reanalyze all samples from the source using the Method of Standard Additions procedure.

11.4 Container No. 2 (Silica Gel). Weigh the spent silica gel (or silica gel plus impinger) to the nearest 0.5 g using a balance. (This step may be conducted in the field.)

12.0 Data Analysis and Calculations

Carry out calculations, retaining at least one extra decimal significant figure beyond that of the acquired data. Round off figures only after the final calculation. Other forms of the equations may be used as long as they give equivalent results.

12.1 Average Dry Gas Meter Temperature and Average Orifice Pressure Drop, Dry Gas Volume, Volume of Water Vapor Condensed, Moisture Content, and Isokinetic Variation. Same as Method 5, Sections 12.2 through 12.5 and 12.11, respectively.

12.2 Stack Gas Velocity. Using the data from this test and Equation 2–9 of Method 2, calculate the average stack gas velocity v_s.

12.3 Total Mercury.

12.3.1 For each source sample, correct the average maximum absorbance of the two consecutive samples whose peak heights agree within 3 percent of their average for the contribution of the solution blank (see Section 10.6.3). Use the calibration curve and these corrected averages to determine the final total weight of Hg in ng in the aeration cell for each source sample.

12.3.2 Correct for any dilutions made to bring the sample into the working range of the spectrophotometer. Then calculate the Hg in the original solution, m_{Hg}, as follows:

$$m_{Hg} = \left[C_{Hg(AC)}\left(DF\right)\left(V_f\right)\left(10^{-3}\right)\right]/S \qquad \text{Eq. 101-1}$$

Where:

CHg(AC)= Total ng of Hg in aliquot analyzed (reagent blank subtracted).

DF = Dilution factor for the Hg-containing solution (before adding to the aeration cell; *e.g.,* DF = 250/2 if the source samples were diluted as described in Section 11.2.2).

V_f= Solution volume of original sample, 1000 ml for samples diluted as described in Section 11.2.1.

10^{-3}= Conversion factor, µg/ng.

S = Aliquot volume added to aeration cell, ml.

12.4 Mercury Emission Rate. Calculate the daily Hg emission rate, R, using Equation 101–2. For continuous operations, the operating time is equal to 86,400 seconds per day. For cyclic operations, use only the time per day each stack is in operation. The total Hg emission rate from a source will be the summation of results from all stacks.

$$R = \frac{K m_{Hg} V_s A_s \left(86{,}400 \times 10^{-6}\right)}{\left[V_{m(std)} + V_{w(std)}\right]\left(T_s / P_s\right)} \qquad \text{Eq. 101-2}$$

Where:

K_1= 0.3858 °K/mm Hg for metric units.

K_1= 17.64 °R/in. Hg for English units.

K_3= 10^{-6}g/µg for metric units.

= 2.2046 " × 10^{-9}lb/µg for English units.

P_s= Absolute stack gas pressure, mm Hg (in. Hg).

t = Daily operating time, sec/day.

T_s= Absolute average stack gas temperature, °K (°R).

Vm(std)= Dry gas sample volume at standard conditions, scm (scf).

Vw(std)= Volume of water vapor at standard conditions, scm (scf).

12.5 Determination of Compliance. Each performance test consists of three repetitions of the applicable test method. For the purpose of determining compliance with an applicable national emission standard, use the average of the results of all repetitions.

13.0 Method Performance

The following estimates are based on collaborative tests, wherein 13 laboratories performed duplicate analyses on two Hg-containing samples from a chlor-alkali plant and on one laboratory-prepared sample of known Hg concentration. The sample concentrations ranged from 2 to 65 µg Hg/ml.

13.1 Precision. The estimated intra-laboratory and inter-laboratory standard deviations are 1.6 and 1.8 µg Hg/ml, respectively.

13.2 Accuracy. The participating laboratories that analyzed a 64.3 µg Hg/ml (in 0.1 M ICl) standard obtained a mean of 63.7 µg Hg/ml.

13.3 Analytical Range. After initial dilution, the range of this method is 0.5 to 120 µg Hg/ml. The upper limit can be extended by further dilution of the sample.

14.0 Pollution Prevention.[Reserved]

15.0 Waste Management.[Reserved]

16.0 References

Same as Method 5, Section 17.0, References 1–3, 5, and 6, with the addition of the following:

1. Determining Dust Concentration in a Gas Stream. ASME Performance Test Code No. 27. New York, NY. 1957.

2. DeVorkin, Howard, *et al.* Air Pollution Source Testing Manual. Air Pollution Control District. Los Angeles, CA. November 1963.

3. Hatch, W.R., and W.I. Ott. Determination of Sub-Microgram Quantities of Mercury by Atomic Absorption Spectrophotometry. Anal. Chem. 40:2085–87. 1968.

4. Mark, L.S. Mechanical Engineers' Handbook. McGraw-Hill Book Co., Inc. New York, NY. 1951.

5. Western Precipitation Division of Joy Manufacturing Co. Methods for Determination of Velocity, Volume, Dust and Mist Content of Gases. Bulletin WP–50. Los Angeles, CA. 1968.

6. Perry, J.H. Chemical Engineers' Handbook. McGraw-Hill Book Co., Inc. New York, NY. 1960.

7. Shigehara, R.T., W.F. Todd, and W.S. Smith. Significance of Errors in Stack Sampling Measurements. Stack Sampling News. *1* (3):6–18. September 1973.

8. Smith, W.S., R.T. Shigehara, and W.F. Todd. A Method of Interpreting Stack Sampling Data. Stack Sampling News. *1* (2):8–17. August 1973.

9. Standard Method for Sampling Stacks for Particulate Matter. In: 1971 Annual Book of ASTM Standards, Part 23. ASTM Designation D 2928–71. Philadelphia, PA 1971.

10. Vennard, J.K. Elementary Fluid Mechanics. John Wiley and Sons, Inc. New York. 1947.

11. Mitchell, W.J. and M.R. Midgett. Improved Procedure for Determining Mercury Emissions from Mercury Cell Chlor-Alkali Plants. J. APCA. *26* :674–677. July 1976.

12. Shigehara, R.T. Adjustments in the EPA Nomograph for Different Pitot Tube Coefficients and Dry Molecular Weights. Stack Sampling News. *2* :4–11. October 1974.

13. Vollaro, R.F. Recommended Procedure for Sample Traverses in Ducts Smaller than 12 Inches in Diameter. U.S. Environmental Protection Agency, Emission Measurement Branch. Research Triangle Park, NC. November 1976.

14. Klein, R. and C. Hach. Standard Additions: Uses and Limitation in Spectrophotometric Measurements. Amer. Lab. *9* :21. 1977.

15. Perkin Elmer Corporation. Analytical Methods for Atomic Absorption Spectrophotometry. Norwalk, Connecticut. September 1976.

17.0 Tables, Diagrams, Flowcharts, and Validation Data

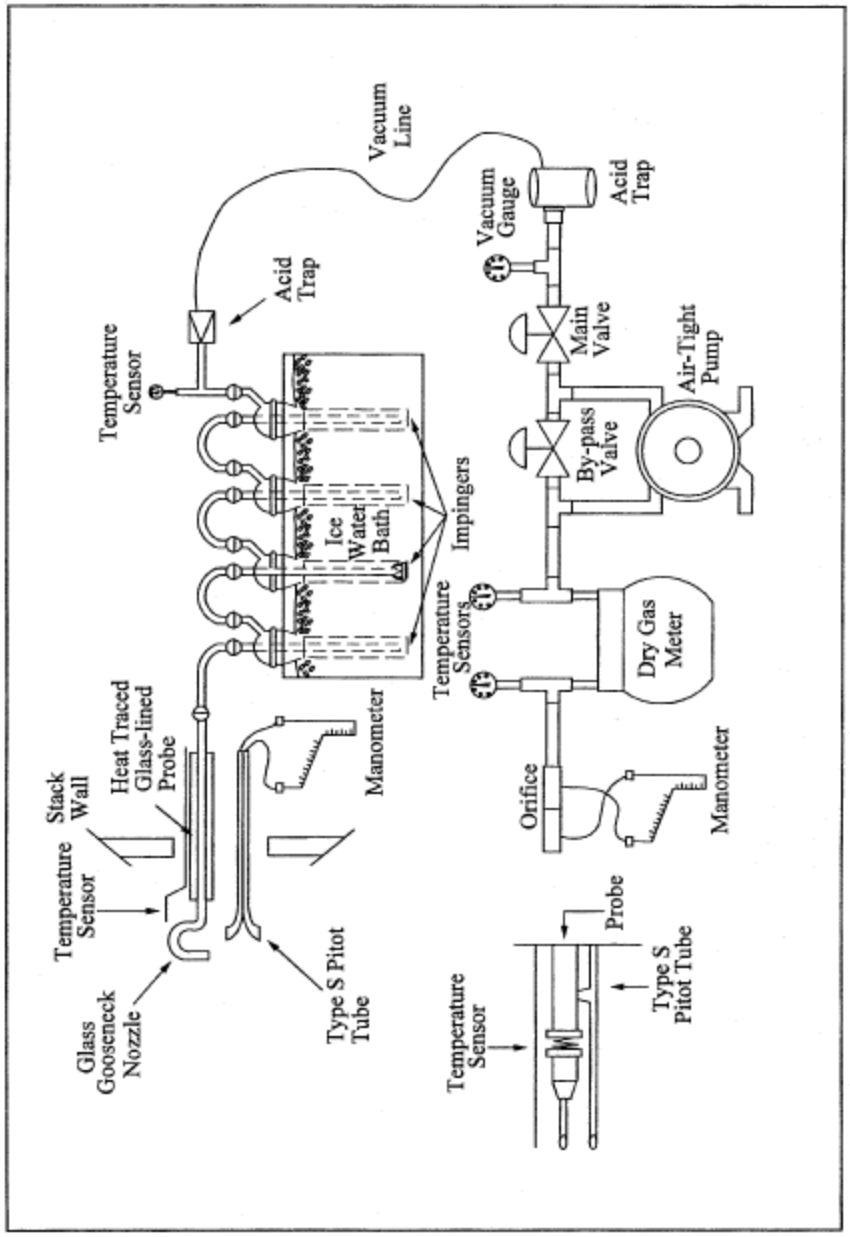

Figure 101-1. Mercury Sampling Train.

View or download PDF

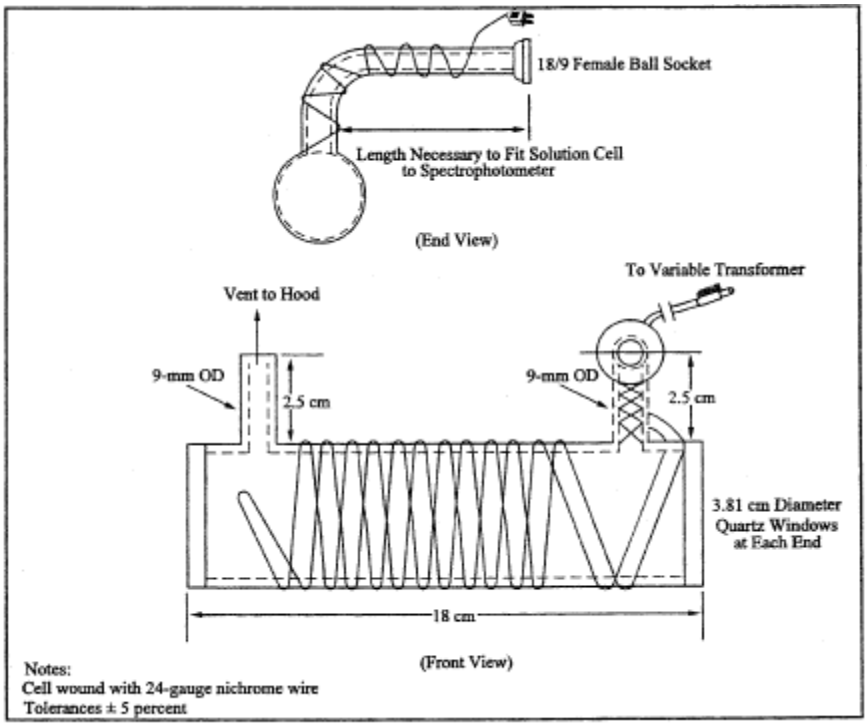

Figure 101-2. Optical Cell.

View or download PDF

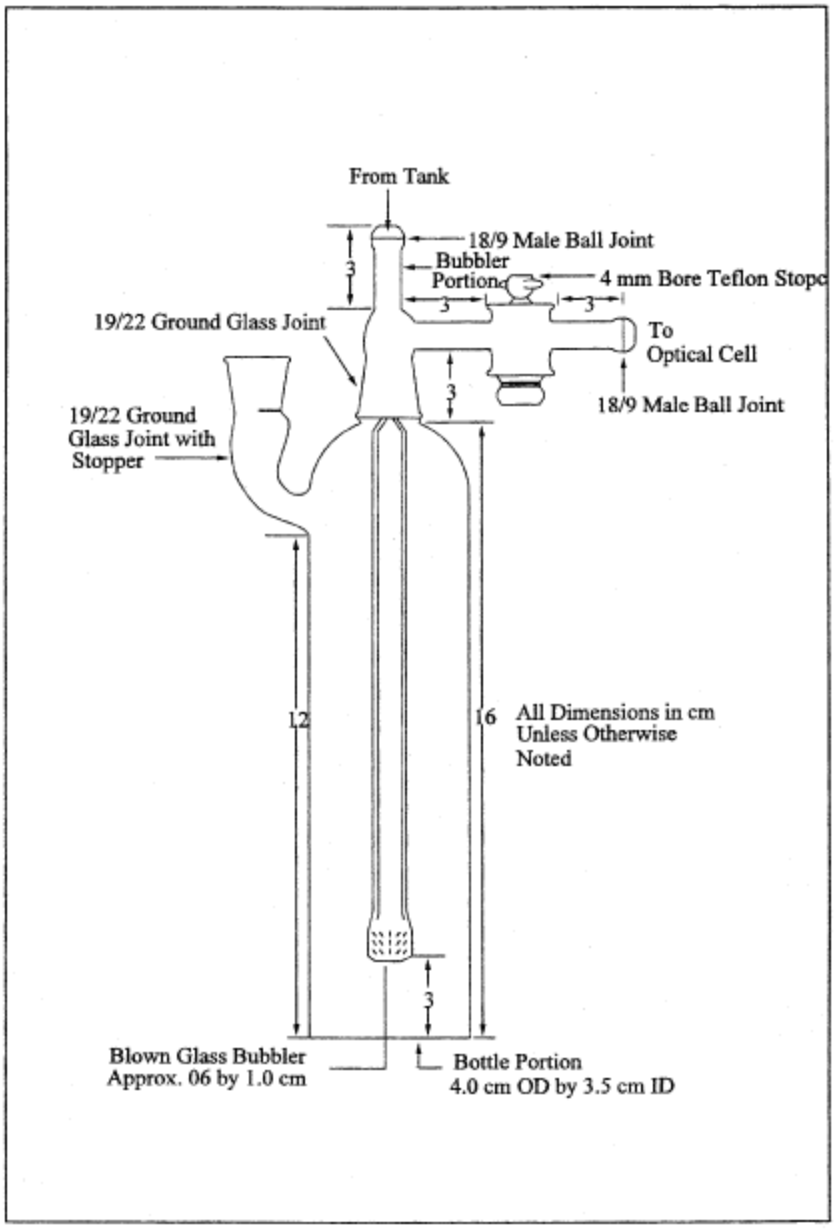

Figure 101-3. Aeration Cell.

View or download PDF

Plant _____
Location _____
Operator _____
Date _____
Run No. _____
Sample box No. _____
Filter box No. _____
Meter H@ _____
C factor _____
Pitot tube coefficient, C_p _____

SCHEMATIC OF STACK CROSS SECTION

Ambient temperature _____
Barometric pressure _____
Assumed moisture, % _____
Probe length, (ft.) _____
Nozzle identification No. _____
Average calibrated nozzle diameter, (in.) _____
Probe heater setting _____
Leak rate, (cfm) _____
Probe liner material _____
Static pressure, (in. Hg) _____
Filter No. _____

Traverse point number	Sampling time	Vacuum	Stack temperature	Velocity head	Pressure differential across orifice meter	Gas meter reading	Gas sample temperature at dry gas meter		Filter holder* temperature	Temperature of gas leaving condenser or last impinger
							Inlet	Outlet		
	min.	(in.Hg)	(T_s) (°F)	(ΔP_s) (in. H_2O)	(in. H_2O)	(ft³)	(°F)	(°F)	(°F)	(°F)
Total							Avg.	Avg.		
Average							Avg.			

* If Applicable

Figure 101-4. Mercury Field Data.

View or download PDF

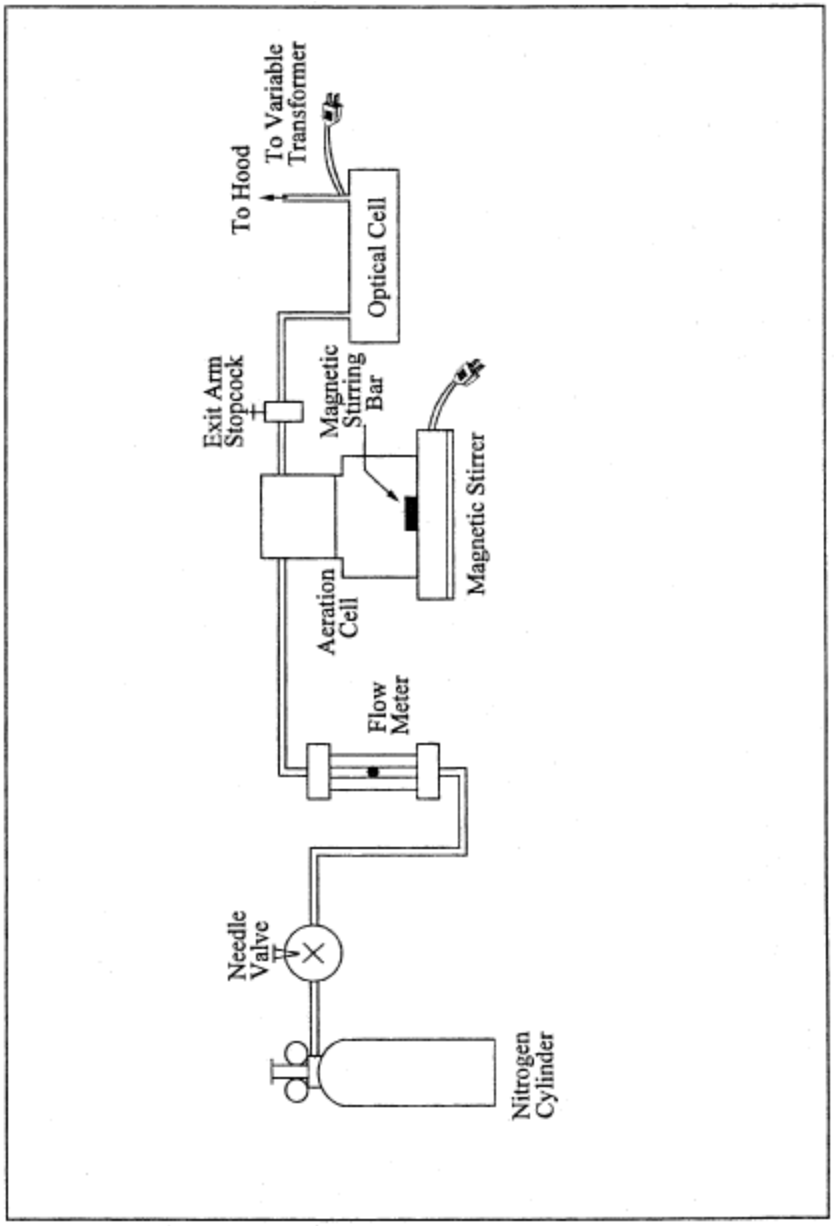

Figure 101-5. Schematic of Aeration System.

View or download PDF

Method 101A—Determination of Particulate and Gaseous Mercury Emissions From Sewage Sludge Incinerators

Note: This method does not include all of the specifications (*e.g.,* equipment and supplies) and procedures (*e.g.,* sampling and analytical) essential to its performance. Some material is incorporated by reference from methods in appendix A to 40 CFR part 60 and in this part. Therefore, to obtain reliable results, persons using this method should also have a thorough knowledge of at least the following additional test methods: Methods 1, Method 2, Method 3, and Method 5 of part 60 (appendix A), and Method 101 part 61 (appendix B).

1.0 Scope and Application

1.1 Analytes.

Analyte	CAS No.	Sensitivity
Mercury (Hg)	7439–97–6	Dependent upon spectrophotometer and recorder.

1.2 Applicability. This method is applicable for the determination of Hg emissions from sewage sludge incinerators and other sources as specified in an applicable subpart of the regulations.

1.3 Data Quality Objectives. Adherence to the requirements of this method will enhance the quality of the data obtained from air pollutant sampling methods.

2.0 Summary of Method

2.1 Particulate and gaseous Hg emissions are withdrawn isokinetically from the source and are collected in acidic potassium permanganate ($KMnO_4$) solution. The Hg collected (in the mercuric form) is reduced to elemental Hg, which is then aerated from the solution into an optical cell and measured by atomic absorption spectrophotometry.

3.0 Definitions.[Reserved]

4.0 Interferences

4.1 Sample Collection. Excessive oxidizable organic matter in the stack gas prematurely depletes the $KMnO_4$solution and thereby prevents further collection of Hg.

4.2 Analysis. Condensation of water vapor on the optical cell windows causes a positive interference.

5.0 Safety

5.1 Disclaimer. This method may involve hazardous materials, operations, and equipment. This test method may not address all of the safety problems associated with its use. It is the responsibility of the user of this test method to establish appropriate safety and health practices and determine the applicability of regulatory limitations prior to performing this test method.

5.2 Corrosive Reagents. The following reagents are hazardous. Personal protective equipment and safe procedures are useful in preventing chemical splashes. If contact occurs, immediately flush with copious amounts of water for at least 15 minutes. Remove clothing under shower and decontaminate. Treat residual chemical burns as thermal burns.

5.2.1 Hydrochloric Acid (HCl). Highly toxic. Vapors are highly irritating to eyes, skin, nose, and lungs, causing severe damage. May cause bronchitis, pneumonia, or edema of lungs. Exposure to concentrations of 0.13 to 0.2 percent can be lethal to humans in a few minutes. Provide ventilation to limit exposure. Reacts with metals, producing hydrogen gas.

5.2.2 Nitric Acid (HNO_3). Highly corrosive to eyes, skin, nose, and lungs. Vapors cause bronchitis, pneumonia, or edema of lungs. Reaction to inhalation may be delayed as long as 30 hours and still be fatal. Provide ventilation to limit exposure. Strong oxidizer. Hazardous reaction may occur with organic materials such as solvents.

5.2.3 Sulfuric acid (H_2SO_4). Rapidly destructive to body tissue. Will cause third degree burns. Eye damage may result in blindness. Inhalation may be fatal from spasm of the larynx, usually within 30 minutes. May cause lung tissue damage with edema. 3 mg/m^3 will cause lung damage in uninitiated. 1 mg/m^3 for 8 hours will cause lung damage or, in higher concentrations, death. Provide ventilation to limit inhalation. Reacts violently with metals and organics.

5.3 Chlorine Evolution. Hydrochloric acid reacts with $KMnO_4$to liberate chlorine gas. Although this is a minimal concern when small quantities of HCl (5–10 ml) are used in the impinger rinse, a potential safety hazard may still

exist. At sources that emit higher concentrations of oxidizable materials (*e.g.,* power plants), more HCl may be required to remove the larger amounts of brown deposit formed in the impingers. In such cases, the potential safety hazards due to sample container pressurization are greater, because of the larger volume of HCl rinse added to the recovered sample. These hazards are eliminated by storing and analyzing the HCl impinger wash separately from the permanganate impinger sample.

6.0 Equipment and Supplies

6.1 Sample Collection and Sample Recovery. Same as Method 101, Sections 6.1 and 6.2, respectively, with the following exceptions:

6.1.1 Probe Liner. Same as in Method 101, Section 6.1.2, except that if a filter is used ahead of the impingers, the probe heating system must be used to minimize the condensation of gaseous Hg.

6.1.2 Filter Holder (Optional). Borosilicate glass with a rigid stainless-steel wire-screen filter support (do not use glass frit supports) and a silicone rubber or Teflon gasket, designed to provide a positive seal against leakage from outside or around the filter. The filter holder must be equipped with a filter heating system capable of maintaining a temperature around the filter holder of 120 ±14 °C (248 ±25 °F) during sampling to minimize both water and gaseous Hg condensation. A filter may also be used in cases where the stream contains large quantities of particulate matter.

6.2 Sample Analysis. Same as Method 101, Section 6.3, with the following additions and exceptions:

6.2.1 Volumetric Pipets. Class A; 1-, 2-, 3-, 4-, 5-, 10-, and 20-ml.

6.2.2 Graduated Cylinder. 25-ml.

6.2.3 Steam Bath.

6.2.4 Atomic Absorption Spectrophotometer or Equivalent. Any atomic absorption unit with an open sample presentation area in which to mount the optical cell is suitable. Instrument settings recommended by the particular manufacturer should be followed. Instruments designed specifically for the measurement of mercury using the cold-vapor technique are commercially available and may be substituted for the atomic absorption spectrophotometer.

6.2.5 Optical Cell. Alternatively, a heat lamp mounted above the cell or a moisture trap installed upstream of the cell may be used.

6.2.6 Aeration Cell. Alternatively, aeration cells available with commercial cold vapor instrumentation may be used.

6.2.7 Aeration Gas Cylinder. Nitrogen, argon, or dry, Hg-free air, equipped with a single-stage regulator. Alternatively, aeration may be provided by a peristaltic metering pump. If a commercial cold vapor instrument is used, follow the manufacturer's recommendations.

7.0 Reagents and Standards

Unless otherwise indicated, it is intended that all reagents conform to the specifications established by the Committee on Analytical Reagents of the American Chemical Society, where such specifications are available; otherwise, use the best available grade.

7.1 Sample Collection and Recovery. The following reagents are required for sample collection and recovery:

7.1.1 Water. Deionized distilled, to conform to ASTM D 1193–77 or 91 Type 1. If high concentrations of organic matter are not expected to be present, the analyst may eliminate the $KMnO_4$test for oxidizable organic matter. Use this water in all dilutions and solution preparations.

7.1.2 Nitric Acid, 50 Percent (V/V). Mix equal volumes of concentrated $HNO_3$and water, being careful to add the acid to the water slowly.

7.1.3 Silica Gel. Indicating type, 6 to 16 mesh. If previously used, dry at 175 °C (350 °F) for 2 hours. New silica gel may be used as received.

7.1.4 Filter (Optional). Glass fiber filter, without organic binder, exhibiting at least 99.95 percent efficiency on 0.3-µm dioctyl phthalate smoke particles. The filter in cases where the gas stream contains large quantities of particulate matter, but blank filters should be analyzed for Hg content.

7.1.5 Sulfuric Acid, 10 Percent (V/V). Carefully add and mix 100 ml of concentrated $H_2SO_4$to 900 ml of water.

7.1.6 Absorbing Solution, 4 Percent $KMnO_4$(W/V). Prepare fresh daily. Dissolve 40 g of $KMnO_4$in sufficient 10 percent $H_2SO_4$to make 1 liter. Prepare and store in glass bottles to prevent degradation.

7.1.7 Hydrochloric Acid, 8 N. Carefully add and mix 67 ml of concentrated HCl to 33 ml of water.

7.2 Sample Analysis. The following reagents and standards are required for sample analysis:

7.2.1 Water. Same as in Section 7.1.1.

7.2.2 Tin (II) Solution. Prepare fresh daily, and keep sealed when not being used. Completely dissolve 20 g of tin (II) chloride (or 25 g of tin (II) sulfate) crystals (Baker Analyzed reagent grade or any other brand that will give a clear solution) in 25 ml of concentrated HCl. Dilute to 250 ml with water. Do not substitute HNO_3H2SO_4, or other strong acids for the HCl.

7.2.3 Sodium Chloride-Hydroxylamine Solution. Dissolve 12 g of sodium chloride and 12 g of hydroxylamine sulfate (or 12 g of hydroxylamine hydrochloride) in water and dilute to 100 ml.

7.2.4 Hydrochloric Acid, 8 N. Same as Section 7.1.7.

7.2.5 Nitric Acid, 15 Percent (V/V). Carefully add 15 ml $HNO_3$to 85 ml of water.

7.2.6 Antifoam B Silicon Emulsion. J.T. Baker Company (or equivalent).

7.2.7 Mercury Stock Solution, 1 mg Hg/ml. Prepare and store all Hg standard solutions in borosilicate glass containers. Completely dissolve 0.1354 g of Hg (II) chloride in 75 ml of water. Add 10 ml of concentrated HNO_3, and adjust the volume to exactly 100 ml with water. Mix thoroughly. This solution is stable for at least one month.

7.2.8 Intermediate Hg Standard Solution, 10 µg/ml. Prepare fresh weekly. Pipet 5.0 ml of the Hg stock solution (Section 7.2.7) into a 500 ml volumetric flask, and add 20 ml of 15 percent HNO_3solution. Adjust the volume to exactly 500 ml with water. Thoroughly mix the solution.

7.2.9 Working Hg Standard Solution, 200 ng Hg/ml. Prepare fresh daily. Pipet 5.0 ml from the “Intermediate Hg Standard Solution” (Section 7.2.8) into a 250-ml volumetric flask. Add 5 ml of 4 percent $KMnO_4$absorbing solution and 5 ml of 15 percent HNO_3. Adjust the volume to exactly 250 ml with water. Mix thoroughly.

7.2.10 Potassium Permanganate, 5 Percent (W/V). Dissolve 5 g of $KMnO_4$in water and dilute to 100 ml.

7.2.11 Filter. Whatman No. 40, or equivalent.

8.0 Sample Collection, Preservation, Transport, and Storage

Same as Method 101, Section 8.0, with the exception of the following:

8.1 Preliminary Determinations. Same as Method 101, Section 8.2, except that the liberation of free iodine in the first impinger due to high Hg or sulfur dioxide concentrations is not applicable. In this method, high oxidizable organic content may make it impossible to sample for the desired minimum time. This problem is indicated by the complete

bleaching of the purple color of the $KMnO_4$solution. In cases where an excess of water condensation is encountered, collect two runs to make one sample, or add an extra impinger in front of the first impinger (also containing acidified $KMnO_4$solution).

8.2 Preparation of Sampling Train. Same as Method 101, Section 8.3, with the exception of the following:

8.2.1 In this method, clean all the glass components by rinsing with 50 percent HNO_3, tap water, 8 N HCl, tap water, and finally with deionized distilled water. Then place 50 ml of absorbing solution in the first impinger and 100 ml in each of the second and third impingers.

8.2.2 If a filter is used, use a pair of tweezers to place the filter in the filter holder. Be sure to center the filter, and place the gasket in the proper position to prevent the sample gas stream from bypassing the filter. Check the filter for tears after assembly is completed. Be sure also to set the filter heating system at the desired operating temperature after the sampling train has been assembled.

8.3 Sampling Train Operation. In addition to the procedure outlined in Method 101, Section 8.5, maintain a temperature around the filter (if applicable) of 120 ±14 °C (248 ±25 °F).

8.4 Sample Recovery. Same as Method 101, Section 8.7, with the exception of the following:

8.4.1 Transfer the probe, impinger assembly, and (if applicable) filter assembly to the cleanup area.

8.4.2 Treat the sample as follows:

8.4.2.1 Container No. 1 (Impinger, Probe, and Filter Holder) and, if applicable, Container No. 1A (HCl rinse).

8.4.2.1.1 Using a graduated cylinder, measure the liquid in the first three impingers to within 1 ml. Record the volume of liquid present (*e.g.,* see Figure 5–6 of Method 5). This information is needed to calculate the moisture content of the effluent gas. (Use only graduated cylinder and glass storage bottles that have been precleaned as in Section 8.2.1.) Place the contents of the first three impingers (four if an extra impinger was added as described in Section 8.1) into a 1000-ml glass sample bottle labeled Container No. 1.

Note: If a filter is used, remove the filter from its holder as outlined under Section 8.4.3.

8.4.2.1.2 Taking care that dust on the outside of the probe or other exterior surfaces does not get into the sample, quantitatively recover the Hg (and any condensate) from the probe nozzle, probe fitting, probe liner, front half of the filter holder (if applicable), and impingers as follows: Rinse these components with a total of 400 ml (350 ml if an extra impinger was added as described in Section 8.1) of fresh absorbing solution, carefully assuring removal of all loose particulate matter from the impingers; add all washings to the 1000 ml glass sample bottle. To remove any residual brown deposits on the glassware following the permanganate rinse, rinse with approximately 100 ml of water, carefully assuring removal of all loose particulate matter from the impingers. Add this rinse to Container No. 1.

8.4.2.1.3 If no visible deposits remain after this water rinse, do not rinse with 8 N HCl. If deposits do remain on the glassware after the water rinse, wash impinger walls and stems with 25 ml of 8 N HCl, and place the wash in a separate container labeled Container No. 1A as follows: Place 200 ml of water in a sample container labeled Container No. 1A. Wash the impinger walls and stem with the HCl by turning the impinger on its side and rotating it so that the HCl contacts all inside surfaces. Pour the HCl wash carefully with stirring into Container No. 1A.

8.4.2.1.4 After all washings have been collected in the appropriate sample container(s), tighten the lid(s) on the container(s) to prevent leakage during shipment to the laboratory. Mark the height of the fluid level to allow subsequent determination of whether leakage has occurred during transport. Label each container to identify its contents clearly.

8.4.3 Container No. 2 (Silica Gel). Same as Method 5, Section 8.7.6.3.

8.4.4 Container No. 3 (Filter). If a filter was used, carefully remove it from the filter holder, place it in a 100-ml glass sample bottle, and add 20 to 40 ml of absorbing solution. If it is necessary to fold the filter, be sure that the particulate

cake is inside the fold. Carefully transfer to the 100-ml sample bottle any particulate matter and filter fibers that adhere to the filter holder gasket by using a dry Nylon bristle brush and a sharp-edged blade. Seal the container. Label the container to identify its contents clearly. Mark the height of the fluid level to allow subsequent determination of whether leakage has occurred during transport.

8.4.5 Container No. 4 (Filter Blank). If a filter was used, treat an unused filter from the same filter lot as that used for sampling according to the procedures outlined in Section 8.4.4.

8.4.6 Container No. 5 (Absorbing Solution Blank). Place 650 ml of 4 percent $KMnO_4$absorbing solution in a 1000-ml sample bottle. Seal the container.

8.4.7 Container No. 6 (HCl Rinse Blank). Place 200 ml of water in a 1000-ml sample bottle, and add 25 ml of 8 N HCl carefully with stirring. Seal the container. Only one blank sample per 3 runs is required.

9.0 Quality Control

9.1 Miscellaneous Quality Control Measures.

Section	Quality control measure	Effect
8.0, 10.0	Sampling equipment leak-checks and calibration	Ensure accuracy and precision of sampling measurements.
10.2	Spectrophotometer calibration	Ensure linearity of spectrophotometer response to standards.
11.3.3	Check for matrix effects	Eliminate matrix effects.

9.2 Volume Metering System Checks. Same as Method 5, Section 9.2.

10.0 Calibration and Standardization

Same as Method 101, Section 10.0, with the following exceptions:

10.1 Optical Cell Heating System Calibration. Same as in Method 101, Section 10.4, except use a-25 ml graduated cylinder to add 25 ml of water to the bottle section of the aeration cell.

10.2 Spectrophotometer and Recorder Calibration.

10.2.1 The Hg response may be measured by either peak height or peak area.

Note: The temperature of the solution affects the rate at which elemental Hg is released from a solution and, consequently, it affects the shape of the absorption curve (area) and the point of maximum absorbance (peak height). To obtain reproducible results, all solutions must be brought to room temperature before use.

10.2.2 Set the spectrophotometer wave length at 253.7 nm, and make certain the optical cell is at the minimum temperature that will prevent water condensation. Then set the recorder scale as follows: Using a 25-ml graduated cylinder, add 25 ml of water to the aeration cell bottle. Add three drops of Antifoam B to the bottle, and then pipet 5.0 ml of the working Hg standard solution into the aeration cell.

Note: Always add the Hg-containing solution to the aeration cell after the 25 ml of water.

10.2.3 Place a Teflon-coated stirring bar in the bottle. Add 5 ml of absorbing solution to the aeration bottle, and mix well. Before attaching the bottle section to the bubbler section of the aeration cell, make certain that (1) the aeration cell exit arm stopcock (Figure 101–3 of Method 101) is closed (so that Hg will not prematurely enter the optical cell when the reducing agent is being added) and (2) there is no flow through the bubbler. If conditions (1) and (2) are met, attach the bottle section to the bubbler section of the aeration cell. Add sodium chloride-hydroxylamine in 1 ml increments until the solution is colorless. Now add 5 ml of tin (II) solution to the aeration bottle through the side arm, and immediately stopper the side arm. Stir the solution for 15 seconds, turn on the recorder, open the aeration cell exit arm stopcock, and immediately initiate aeration with continued stirring. Determine the maximum absorbance of the standard, and set this value to read 90 percent of the recorder full scale.

11.0 Analytical Procedure

11.1 Sample Loss Check. Check the liquid level in each container to see if liquid was lost during transport. If a noticeable amount of leakage occurred, either void the sample or use methods subject to the approval of the Administrator to account for the losses.

11.2 Sample Preparation. Treat sample containers as follows:

11.2.1 Containers No. 3 and No. 4 (Filter and Filter Blank).

11.2.1.1 If a filter is used, place the contents, including the filter, of Containers No. 3 and No. 4 in separate 250-ml beakers, and heat the beakers on a steam bath until most of the liquid has evaporated. Do not heat to dryness. Add 20 ml of concentrated $HNO_3$to the beakers, cover them with a watch glass, and heat on a hot plate at 70 °C (160 °F) for 2 hours. Remove from the hot plate.

11.2.1.2 Filter the solution from digestion of the Container No. 3 contents through Whatman No. 40 filter paper, and save the filtrate for addition to the Container No. 1 filtrate as described in Section 11.2.2. Discard the filter paper.

11.2.1.3 Filter the solution from digestion of the Container No. 4 contents through Whatman No. 40 filter paper, and save the filtrate for addition to Container No. 5 filtrate as described in Section 11.2.3 below. Discard the filter paper.

11.2.2 Container No. 1 (Impingers, Probe, and Filter Holder) and, if applicable, No. 1A (HCl rinse).

11.2.2.1 Filter the contents of Container No. 1 through Whatman No. 40 filter paper into a 1 liter volumetric flask to remove the brown manganese dioxide (MnO_2) precipitate. Save the filter for digestion of the brown MnO_2precipitate. Add the sample filtrate from Container No. 3 to the 1-liter volumetric flask, and dilute to volume with water. If the combined filtrates are greater than 1000 ml, determine the volume to the nearest ml and make the appropriate corrections for blank subtractions. Mix thoroughly. Mark the filtrate as analysis Sample No. A.1 and analyze for Hg within 48 hr of the filtration step. Place the saved filter, which was used to remove the brown MnO_2precipitate, into an appropriate sized container. In a laboratory hood, add 25 ml of 8 N HCl to the filter and allow to digest for a minimum of 24 hours at room temperature.

11.2.2.2 Filter the contents of Container 1A through Whatman No. 40 filter paper into a 500-ml volumetric flask. Then filter the digestate of the brown MnO_2precipitate from Container No. 1 through Whatman No. 40 filter paper into the same 500-ml volumetric flask, and dilute to volume with water. Mark this combined 500 ml dilute solution as analysis Sample No. A.2. Discard the filters.

11.2.3 Container No. 5 (Absorbing Solution Blank) and No. 6 (HCl Rinse Blank).

11.2.3.1 Treat Container No. 5 as Container No. 1 (as described in Section 11.2.2), except substitute the filter blank filtrate from Container No. 4 for the sample filtrate from Container No. 3, and mark as Sample A.1 Blank.

11.2.3.2 Treat Container No. 6 as Container No. 1A, (as described in Section 11.2.2, except substitute the filtrate from the digested blank MnO_2precipitate for the filtrate from the digested sample MnO_2precipitate, and mark as Sample No. A.2 Blank.

Note: When analyzing samples A.1 Blank and HCl A.2 Blank, always begin with 10 ml aliquots. This applies specifically to blank samples.

11.3 Analysis. Calibrate the analytical equipment and develop a calibration curve as outlined in Section 10.0.

11.3.1 Mercury Samples. Then repeat the procedure used to establish the calibration curve with appropriately sized aliquots (1 to 10 ml) of the samples (from Sections 11.2.2 and 11.2.3) until two consecutive peak heights agree within 3 percent of their average value. If the 10 ml sample is below the detectable limit, use a larger aliquot (up to 20 ml), but decrease the volume of water added to the aeration cell accordingly to prevent the solution volume from exceeding the capacity of the aeration bottle. If the peak maximum of a 1.0 ml aliquot is off scale, further dilute the original sample to bring the Hg concentration into the calibration range of the spectrophotometer. If the Hg content of the absorbing solution and filter blank is below the working range of the analytical method, use zero for the blank.

11.3.2 Run a blank and standard at least after every five samples to check the spectrophotometer calibration; recalibrate as necessary.

11.3.3 Check for Matrix Effects (optional). Same as Method 101, Section 11.3.3.

12.0 Data Analysis and Calculations

Note: Carry out calculations, retaining at least one extra decimal significant figure beyond that of the acquired data. Round off figures only after the final calculation. Other forms of the equations may be used as long as they give equivalent results.

12.1 Nomenclature.

C(fltr)Hg= Total ng of Hg in aliquot of $KMnO_4$filtrate and HNO_3digestion of filter analyzed (aliquot of analysis Sample No. A.1).

C(fltr blk)Hg= Total ng of Hg in aliquot of $KMnO_4$blank and HNO_3digestion of blank filter analyzed (aliquot of analysis Sample No. A.1 blank).

C(HC1 blk)Hg= Total ng of Hg analyzed in aliquot of the 500-ml analysis Sample No. HCl A.2 blank.

C(HCl)Hg= Total ng of Hg analyzed in the aliquot from the 500-ml analysis Sample No. HCl A.2.

DF = Dilution factor for the HCl-digested Hg-containing solution, Analysis Sample No. “HCl A.2.”

DF_{blk}= Dilution factor for the HCl-digested Hg containing solution, Analysis Sample No. “HCl A.2 blank.” (Refer to sample No. “HCl A.2” dilution factor above.)

m(fltr)Hg= Total blank corrected µg of Hg in $KMnO_4$filtrate and HNO_3digestion of filter sample.

m(HCl)Hg= Total blank corrected µg of Hg in HCl rinse and HCl digestate of filter sample.

m_{Hg}= Total blank corrected Hg content in each sample, µg.

S = Aliquot volume of sample added to aeration cell, ml.

S_{blk}= Aliquot volume of blank added to aeration cell, ml.

Vf(blk)= Solution volume of blank sample, 1000 ml for samples diluted as described in Section 11.2.2.

Vf(fltr)= Solution volume of original sample, normally 1000 ml for samples diluted as described in Section 11.2.2.

Vf(HCl)= Solution volume of original sample, 500 ml for samples diluted as described in Section 11.2.1.

10^{-3}= Conversion factor, µg/ng.

12.2 Average Dry Gas Meter Temperature and Average Orifice Pressure Drop, Dry Gas Volume, Volume of Water Vapor Condensed, Moisture Content, Isokinetic Variation, and Stack Gas Velocity and Volumetric Flow Rate. Same as Method 5, Sections 12.2 through 12.5, 12.11, and 12.12, respectively.

12.3 Total Mercury.

12.3.1 For each source sample, correct the average maximum absorbance of the two consecutive samples whose peak heights agree within 3 percent of their average for the contribution of the blank. Use the calibration curve and these corrected averages to determine the final total weight of Hg in ng in the aeration cell for each source sample.

12.3.2 Correct for any dilutions made to bring the sample into the working range of the spectrophotometer.

$$m_{(HCl)Hg} = \frac{\left[C_{(HCl)Hg} DF\right]}{S} - \frac{\left[C_{(HClblk)Hg} DF_{blk}\right]}{S_{blk}} Vf_{(HCl)} \left(10^{-3}\right) \qquad \text{Eq. 101A-1}$$

Note: This dilution factor applies only to the intermediate dilution steps, since the original sample volume [$(V_f)_{HCL}$] of “HCl A.2” has been factored out in the equation along with the sample aliquot (S). In Eq. 101A–1, the sample aliquot, S, is introduced directly into the aeration cell for analysis according to the procedure outlined in Section 11.3.1. A dilution factor is required only if it is necessary to bring the sample into the analytical instrument's calibration range.

Note: The maximum allowable blank subtraction for the HCl is the lesser of the two following values: (1) the actual blank measured value (analysis Sample No. HCl A.2 blank), or (2) 5% of the Hg content in the combined HCl rinse and digested sample (analysis Sample No. HCl A.2).

$$m_{(fltr)Hg} = \frac{\left[C_{(fltr)Hg} DF\, V_{f(fltr)}\right]}{S} - \frac{\left[C_{(fltr\,blk)Hg} DF_{blk}\, V_{f(blk)}\right]}{S_{blk}} \qquad \text{Eq. 101A-2}$$

Note: The maximum allowable blank subtraction for the HCl is the lesser of the two following values: (1) the actual blank measured value (analysis Sample No. “A.1 blank”), or (2) 5% of the Hg content in the filtrate (analysis Sample No. “A.1”).

$$m_{Hg} = m_{(HCl)Hg} + m_{(fltr)Hg} \qquad \text{Eq. 101A-3}$$

12.3 Mercury Emission Rate. Same as Method 101, Section 12.3.

12.4 Determination of Compliance. Same as Method 101, Section 12.4.

13.0 Method Performance

13.1 Precision. Based on eight paired-train tests, the intra-laboratory standard deviation was estimated to be 4.8 µg/ml in the concentration range of 50 to 130 µg/m3.

13.2 Bias. [Reserved]

13.3 Range. After initial dilution, the range of this method is 20 to 800 ng Hg/ml. The upper limit can be extended by further dilution of the sample.

14.0 Pollution Prevention[Reserved]

15.0 Waste Management[Reserved]

16.0 References

Same as Section 16.0 of Method 101, with the addition of the following:

1. Mitchell, W.J., *et al.* Test Methods to Determine the Mercury Emissions from Sludge Incineration Plants. U.S. Environmental Protection Agency. Research Triangle Park, NC. Publication No. EPA–600/4–79–058. September 1979.

2. Wilshire, Frank W., *et al.* Reliability Study of the U.S. EPA's Method 101A—Determination of Particulate and Gaseous Mercury Emissions. U.S. Environmental Protection Agency. Research Triangle Park, NC. Report No. 600/D–31/219 AREAL 367, NTIS Acc No. PB91–233361.

3. Memorandum from William J. Mitchell to Roger T. Shigehara discussing the potential safety hazard in Section 7.2 of Method 101A. February 28, 1990.

17.0 Tables, Diagrams, Flowcharts, And Validation Data[Reserved]

Method 102—Determination of Particulate and Gaseous Mercury Emissions From Chlor-Alkali Plants (Hydrogen Streams)

Note: This method does not include all of the specifications (*e.g.,* equipment and supplies) and procedures (*e.g.,* sampling and analytical) essential to its performance. Some material is incorporated by reference from other methods in this part and in appendix A to 40 CFR part 60. Therefore, to obtain reliable results, persons using this method should have a thorough knowledge of at least the following additional test methods: Method 1, Method 2, Method 3, Method 5, and Method 101.

1.0 Scope and Application

1.1 Analytes.

Analyte	CAS No.	Sensitivity
Mercury (Hg)	7439–97–6	Dependent upon recorder and spectrophotometer.

1.2 Applicability. This method is applicable for the determination of Hg emissions, including both particulate and gaseous Hg, from chlor-alkali plants and other sources (as specified in the regulations) where the carrier-gas stream in the duct or stack is principally hydrogen.

1.3 Data Quality Objectives. Adherence to the requirements of this method will enhance the quality of the data obtained from air pollutant sampling methods.

2.0 Summary of Method

2.1 Particulate and gaseous Hg emissions are withdrawn isokinetically from the source and collected in acidic iodine monochloride (ICl) solution. The Hg collected (in the mercuric form) is reduced to elemental Hg, which is then aerated from the solution into an optical cell and measured by atomic absorption spectrophotometry.

3.0 Definitions[Reserved]

4.0 Interferences

Same as Method 101, Section 4.2.

5.0 Safety

5.1 Disclaimer. This method may involve hazardous materials, operations, and equipment. This test method may not address all of the safety problems associated with its use. It is the responsibility of the user of this test method to establish appropriate safety and health practices and determine the applicability of regulatory limitations prior to performing this test method.

5.2 Corrosive Reagents. Same as Method 101, Section 5.2.

5.3 Explosive Mixtures. The sampler must conduct the source test under conditions of utmost safety because hydrogen and air mixtures are explosive. Since the sampling train essentially is leakless, attention to safe operation can be concentrated at the inlet and outlet. If a leak does occur, however, remove the meter box cover to avoid a possible explosive mixture. The following specific precautions are recommended:

5.3.1 Operate only the vacuum pump during the test. The other electrical equipment, *e.g.,* heaters, fans, and timers, normally are not essential to the success of a hydrogen stream test.

5.3.2 Seal the sample port to minimize leakage of hydrogen from the stack.

5.3.3 Vent sampled hydrogen at least 3 m (10 ft) away from the train. This can be accomplished by attaching a 13-mm (0.50-in.) ID Tygon tube to the exhaust from the orifice meter.

Note: A smaller ID tubing may cause the orifice meter calibration to be erroneous. Take care to ensure that the exhaust line is not bent or pinched.

6.0 Equipment and Supplies

Same as Method 101, Section 6.0, with the exception of the following:

6.1 Probe Heating System. Do not use, unless otherwise specified.

6.2 Glass Fiber Filter. Do not use, unless otherwise specified.

7.0 Reagents and Standards

Same as Method 101, Section 7.0.

8.0 Sample Collection, Preservation, Transport, and Storage

Same as Method 101, Section 8.0, with the exception of the following:

8.1 Setting of Isokinetic Rates.

8.1.1 If a nomograph is used, take special care in the calculation of the molecular weight of the stack gas and in the setting of the nomograph to maintain isokinetic conditions during sampling (Sections 8.1.1.1 through 8.1.1.3 below).

8.1.1.1 Calibrate the meter box orifice. Use the techniques described in APTD–0576 (see Reference 9 in Section 17.0 of Method 5). Calibration of the orifice meter at flow conditions that simulate the conditions at the source is

suggested. Calibration should either be done with hydrogen or with some other gas having similar Reynolds Number so that there is similarity between the Reynolds Numbers during calibration and during sampling.

8.1.1.2 The nomograph described in APTD–0576 cannot be used to calculate the C factor because the nomograph is designed for use when the stack gas dry molecular weight is 29 ±4. Instead, the following calculation should be made to determine the proper C factor:

$$C = 0.00154 \Delta H @ C_p^{\,2} T_m \left(P_s / P_m \right) \frac{\left(1 - B_{ws}\right)^2}{\left(1 - B_{ws}\right) + 18 B_{ws}} \qquad \text{Eq. 102-1}$$

Where:

B_{ws}= Fraction by volume of water vapor in the stack gas.

C_p= Pitot tube calibration coefficient, dimensionless.

M_d= Dry molecular weight of stack gas, lb/lb-mole.

P_s= Absolute pressure of stack gas, in. Hg.

P_m= Absolute pressure of gas at the meter, in. Hg.

T_m= Absolute temperature of gas at the orifice, °R.

ΔH@= Meter box calibration factor obtained in Section 8.1.1.1, in. H_2O.

0.00154 = (in. H_2O/°R).

Note: This calculation is left in English units, and is not converted to metric units because nomographs are based on English units.

8.1.1.3 Set the calculated C factor on the operating nomograph, and select the proper nozzle diameter and K factor as specified in APTD–0576. If the C factor obtained in Section 8.1.1.2 exceeds the values specified on the existing operating nomograph, expand the C scale logarithmically so that the values can be properly located.

8.1.2 If a calculator is used to set isokinetic rates, it is suggested that the isokinetic equation presented in Reference 13 in Section 17.0 of Method 101 be consulted.

8.2 Sampling in Small (<12-in. Diameter) Stacks. When the stack diameter (or equivalent diameter) is less than 12 inches, conventional pitot tube-probe assemblies should not be used. For sampling guidelines, see Reference 14 in Section 17.0 of Method 101.

9.0 Quality Control

Same as Method 101, Section 9.0.

10.0 Calibration and Standardizations

Same as Method 101, Section 10.0.

11.0 Analytical Procedure

Same as Method 101, Section 11.0.

12.0 Data Analysis and Calculations

Same as Method 101, Section 12.0.

13.0 Method Performance

Same as Method 101, Section 13.0.

13.1 Analytical Range. After initial dilution, the range of this method is 0.5 to 120 µg Hg/ml. The upper limit can be extended by further dilution of the sample.

14.0 Pollution Prevention.[Reserved]

15.0 Waste Management.[Reserved]

16.0 References

Same as Method 101, Section 16.0.

17.0 Tables, Diagrams, Flowcharts, and Validation Data.[Reserved]

Method 103—Beryllium Screening Method

1.0 Scope and Application

1.1 Analytes.

Analyte	CAS No.	Sensitivity
Beryllium (Be)	7440–41–7	Dependent upon analytical procedure used.

1.2 Applicability. This procedure details guidelines and requirements for methods acceptable for use in determining Be emissions in ducts or stacks at stationary sources.

1.3 Data Quality Objectives. Adherence to the requirements of this method will enhance the quality of the data obtained from air pollutant sampling methods.

2.0 Summary of Method

2.1 Particulate Be emissions are withdrawn isokinetically from three points in a duct or stack and are collected on a filter. The collected sample is analyzed for Be using an appropriate technique.

3.0 Definitions.[Reserved]

4.0 Interferences.[Reserved]

5.0 Safety

5.1 Disclaimer. This method may involve hazardous materials, operations, and equipment. This test method may not address all of the safety problems associated with its use. It is the responsibility of the user of this test method to establish appropriate safety and health practices and determine the applicability of regulatory limitations prior to performing this test method.

5.2 Hydrochloric Acid (HCl). Highly corrosive and toxic. Vapors are highly irritating to eyes, skin, nose, and lungs, causing severe damage. May cause bronchitis, pneumonia, or edema of lungs. Exposure to concentrations of 0.13 to 0.2 percent can be lethal to humans in a few minutes. Provide ventilation to limit exposure. Reacts with metals, producing hydrogen gas. Personal protective equipment and safe procedures are useful in preventing chemical splashes. If contact occurs, immediately flush with copious amounts of water at least 15 minutes. Remove clothing under shower and decontaminate. Treat residual chemical burn as thermal burn.

6.0 Equipment and Supplies

6.1 Sample Collection. A schematic of the required sampling train configuration is shown in Figure 103–1 in Section 17.0. The essential components of the train are as follows:

6.1.1 Nozzle. Stainless steel, or equivalent, with sharp, tapered leading edge.

6.1.2 Probe. Sheathed borosilicate or quartz glass tubing.

6.1.3 Filter. Millipore AA, or equivalent, with appropriate filter holder that provides a positive seal against leakage from outside or around the filter. It is suggested that a Whatman 41, or equivalent, be placed immediately against the back side of the Millipore filter as a guard against breakage of the Millipore. Include the backup filter in the analysis. To be equivalent, other filters shall exhibit at least 99.95 percent efficiency (0.05 percent penetration) on 0.3 micron dioctyl phthalate smoke particles, and be amenable to the Be analysis procedure. The filter efficiency tests shall be conducted in accordance with ASTM D 2986–71, 78, 95a (incorporated by reference—see §61.18). Test data from the supplier's quality control program are sufficient for this purpose.

6.1.4 Meter-Pump System. Any system that will maintain isokinetic sampling rate, determine sample volume, and is capable of a sampling rate of greater than 14 lpm (0.5 cfm).

6.2 Measurement of Stack Conditions. The following equipment is used to measure stack conditions:

6.2.1 Pitot Tube. Type S, or equivalent, with a constant coefficient (±5 percent) over the working range.

6.2.2 Inclined Manometer, or Equivalent. To measure velocity head to ±10 percent of the minimum value.

6.2.3 Temperature Measuring Device. To measure stack temperature to ±1.5 percent of the minimum absolute stack temperature.

6.2.4 Pressure Measuring Device. To measure stack pressure to ±2.5 mm Hg (0.1 in. Hg).

6.2.5 Barometer. To measure atmospheric pressure to ±2.5 mm Hg (0.1 in. Hg).

6.2.6 Wet and Dry Bulb Thermometers, Drying Tubes, Condensers, or Equivalent. To determine stack gas moisture content to ±1 percent.

6.3 Sample Recovery.

6.3.1 Probe Cleaning Equipment. Probe brush or cleaning rod at least as long as probe, or equivalent. Clean cotton balls, or equivalent, should be used with the rod.

6.3.2 Leakless Glass Sample Bottles. To contain sample.

6.4 Analysis. All equipment necessary to perform an atomic absorption, spectrographic, fluorometric, chromatographic, or equivalent analysis.

7.0 Reagents and Standards

7.1 Sample Recovery.

7.1.1 Water. Deionized distilled, to conform to ASTM D 1193–77, 91 (incorporated by reference—see §61.18), Type 3.

7.1.2 Acetone. Reagent grade.

7.1.3 Wash Acid, 50 Percent (V/V) Hydrochloric Acid (HCl). Mix equal volumes of concentrated HCl and water, being careful to add the acid slowly to the water.

7.2 Analysis. Reagents and standards as necessary for the selected analytical procedure.

8.0 Sample Collection, Preservation, Transport, and Storage

Guidelines for source testing are detailed in the following sections. These guidelines are generally applicable; however, most sample sites differ to some degree and temporary alterations such as stack extensions or expansions often are required to insure the best possible sample site. Further, since Be is hazardous, care should be taken to minimize exposure. Finally, since the total quantity of Be to be collected is quite small, the test must be carefully conducted to prevent contamination or loss of sample.

8.1 Selection of a Sampling Site and Number of Sample Runs. Select a suitable sample site that is as close as practicable to the point of atmospheric emission. If possible, stacks smaller than one foot in diameter should not be sampled.

8.1.1 Ideal Sampling Site. The ideal sampling site is at least eight stack or duct diameters downstream and two diameters upstream from any flow disturbance such as a bend, expansion or contraction. For rectangular cross sections, use Equation 103–1 in Section 12.2 to determine an equivalent diameter, D_e.

8.1.2 Alternate Sampling Site. Some sampling situations may render the above sampling site criteria impractical. In such cases, select an alternate site no less than two diameters downstream and one-half diameter upstream from any point of flow disturbance. Additional sample runs are recommended at any sample site not meeting the criteria of Section 8.1.1.

8.1.3 Number of Sample Runs Per Test. Three sample runs constitute a test. Conduct each run at one of three different points. Select three points that proportionately divide the diameter, or are located at 25, 50, and 75 percent of the diameter from the inside wall. For horizontal ducts, sample on a vertical line through the centroid. For rectangular ducts, sample on a line through the centroid and parallel to a side. If additional sample runs are performed per Section 8.1.2, proportionately divide the duct to accommodate the total number of runs.

8.2 Measurement of Stack Conditions. Using the equipment described in Section 6.2, measure the stack gas pressure, moisture, and temperature to determine the molecular weight of the stack gas. Sound engineering estimates may be made in lieu of direct measurements. Describe the basis for such estimates in the test report.

8.3 Preparation of Sampling Train.

8.3.1 Assemble the sampling train as shown in Figure 103–1. It is recommended that all glassware be precleaned by soaking in wash acid for two hours.

8.3.2 Leak check the sampling train at the sampling site. The leakage rate should not be in excess of 1 percent of the desired sample rate.

8.4 Sampling Train Operation.

8.4.1 For each run, measure the velocity at the selected sampling point. Determine the isokinetic sampling rate. Record the velocity head and the required sampling rate. Place the nozzle at the sampling point with the tip pointing directly into the gas stream. Immediately start the pump and adjust the flow to isokinetic conditions. At the conclusion

of the test, record the sampling rate. Again measure the velocity head at the sampling point. The required isokinetic rate at the end of the period should not have deviated more than 20 percent from that originally calculated. Describe the reason for any deviation beyond 20 percent in the test report.

8.4.2 Sample at a minimum rate of 14 liters/min (0.5 cfm). Obtain samples over such a period or periods of time as are necessary to determine the maximum emissions which would occur in a 24-hour period. In the case of cyclic operations, perform sufficient sample runs so as to allow determination or calculation of the emissions that occur over the duration of the cycle. A minimum sampling time of two hours per run is recommended.

8.5 Sample Recovery.

8.5.1 It is recommended that all glassware be precleaned as in Section 8.3. Sample recovery should also be performed in an area free of possible Be contamination. When the sampling train is moved, exercise care to prevent breakage and contamination. Set aside a portion of the acetone used in the sample recovery as a blank for analysis. The total amount of acetone used should be measured for accurate blank correction. Blanks can be eliminated if prior analysis shows negligible amounts.

8.5.2 Remove the filter (and backup filter, if used) and any loose particulate matter from filter holder, and place in a container.

8.5.3 Clean the probe with acetone and a brush or long rod and cotton balls. Wash into the container with the filter. Wash out the filter holder with acetone, and add to the same container.

9.0 Quality Control.[Reserved]

10.0 Calibration and Standardization

10.1 Sampling Train. As a procedural check, compare the sampling rate regulation with a dry gas meter, spirometer, rotameter (calibrated for prevailing atmospheric conditions), or equivalent, attached to the nozzle inlet of the complete sampling train.

10.2 Analysis. Perform the analysis standardization as suggested by the manufacturer of the instrument, or the procedures for the analytical method in use.

11.0 Analytical Procedure

Make the necessary preparation of samples and analyze for Be. Any currently acceptable method (e.g., atomic absorption, spectrographic, fluorometric, chromatographic) may be used.

12.0 Data Analysis and Calculations

12.1 Nomenclature.

A_s(avg) = Stack area, m^2 (ft^2).

L = Length.

R = Be emission rate, g/day.

V_s(avg) = Average stack gas velocity, m/sec (ft/sec).

V_{total}= Total volume of gas sampled, m^3 (ft^3).

W = Width.

W_t= Total weight of Be collected, mg.

10^{-6}= Conversion factor, g/µg.

86,400 = Conversion factor, sec/day.

12.2 Calculate the equivalent diameter, De, for a rectangular cross section as follows:

$$D_e = \frac{2 \cdot L \cdot W}{L + W} \qquad \text{Eq. 103-1}$$

12.3 Calculate the Be emission rate, R, in g/day for each stack using Equation 103–2. For cyclic operations, use only the time per day each stack is in operation. The total Be emission rate from a source is the summation of results from all stacks.

$$R = \frac{W_t V_{s(avg)} A_s \left(86,400\right)\left(10^{-6}\right)}{V_{total}} \qquad \text{Eq. 103-2}$$

12.4 Test Report. Prepare a test report that includes as a minimum: A detailed description of the sampling train used, results of the procedural check described in Section 10.1 with all data and calculations made, all pertinent data taken during the test, the basis for any estimates made, isokinetic sampling calculations, and emission results. Include a description of the test site, with a block diagram and brief description of the process, location of the sample points in the stack cross section, and stack dimensions and distances from any point of disturbance.

13.0 Method Performance.[Reserved]

14.0 Pollution Prevention.[Reserved]

15.0 Waste Management.[Reserved]

16.0 References.[Reserved]

17.0 Tables, Diagrams, Flow Charts, and Validation Data

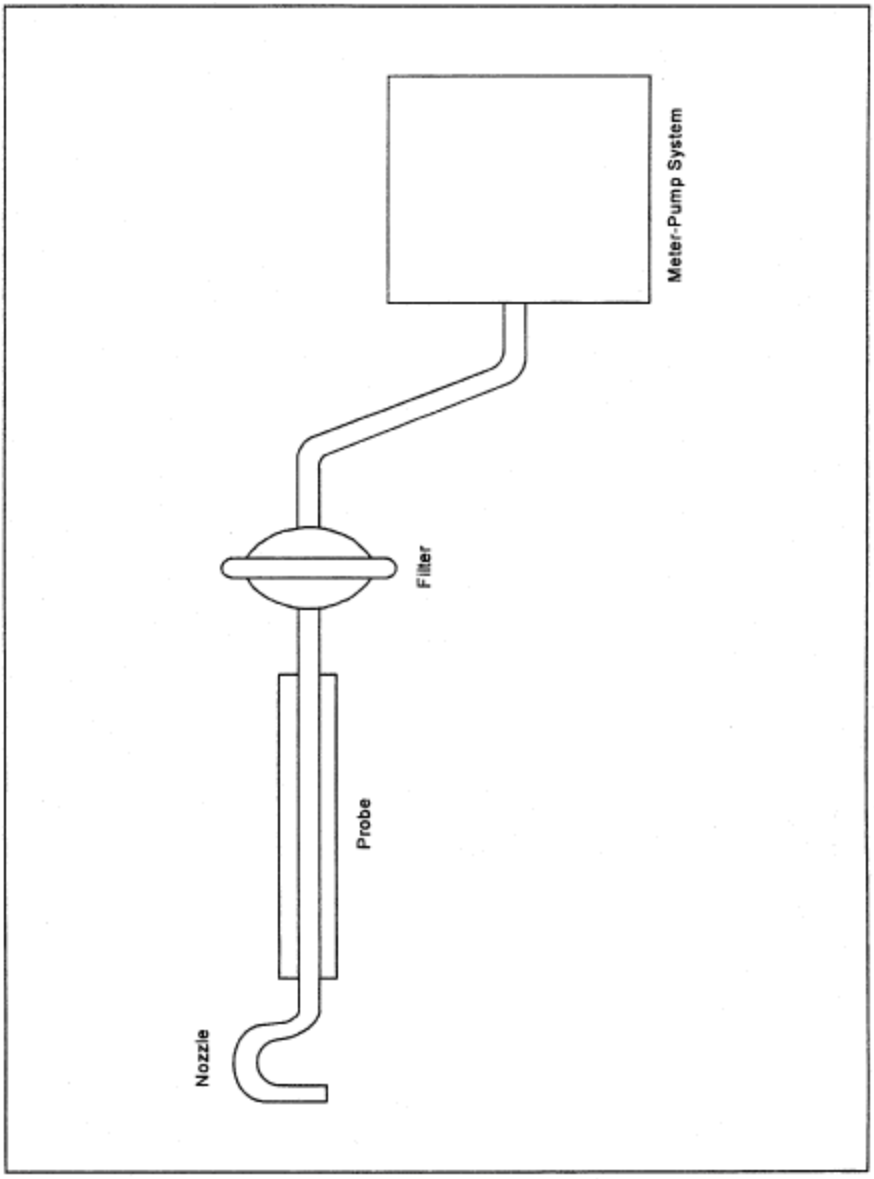

Figure 103-1. Beryllium Screening Method Sampling Train Schematic.

View or download PDF

Method 104—Determination of Beryllium Emissions From Stationary Sources

Note: This method does not include all of the specifications (*e.g.,* equipment and supplies) and procedures (*e.g.,* sampling and analytical) essential to its performance. Some material is incorporated by reference from methods in appendix A to 40 CFR part 60. Therefore, to obtain reliable results, persons using this method should have a thorough knowledge of at least the following additional test methods: Method 1, Method 2, Method 3, and Method 5 in appendix A, part 60.

1.0 Scope and Application

1.1 Analytes.

Analyte	CAS No.	Sensitivity
Beryllium (Be)	7440–41–7	Dependent upon recorder and spectrophotometer.

1.2 Applicability. This method is applicable for the determination of Be emissions in ducts or stacks at stationary sources. Unless otherwise specified, this method is not intended to apply to gas streams other than those emitted directly to the atmosphere without further processing.

1.3 Data Quality Objectives. Adherences to the requirements of this method will enhance the quality of the data obtained from air pollutant sampling methods.

2.0 Summary of Method

2.1 Particulate and gaseous Be emissions are withdrawn isokinetically from the source and are collected on a glass fiber filter and in water. The collected sample is digested in an acid solution and is analyzed by atomic absorption spectrophotometry.

3.0 Definitions[Reserved]

4.0 Interferences

4.1 Matrix Effects. Analysis for Be by flame atomic absorption spectrophotometry is sensitive to the chemical composition and to the physical properties (*e.g.,* viscosity, pH) of the sample. Aluminum and silicon in particular are known to interfere when present in appreciable quantities. The analytical procedure includes (optionally) the use of the Method of Standard Additions to check for these matrix effects, and sample analysis using the Method of Standard Additions if significant matrix effects are found to be present (see Reference 2 in Section 16.0).

5.0 Safety

5.1 Disclaimer. This method may involve hazardous materials, operations, and equipment. This test method may not address all of the safety problems associated with its use. It is the responsibility of the user of this test method to establish appropriate safety and health practices and determine the applicability of regulatory limitations prior to performing this test method.

5.2 Corrosive reagents. The following reagents are hazardous. Personal protective equipment and safe procedures are useful in preventing chemical splashes. If contact occurs, immediately flush with copious amounts of water at least 15 minutes. Remove clothing under shower and decontaminate. Treat residual chemical burn as thermal burn.

5.2.1 Hydrochloric Acid (HC_l). Highly toxic. Vapors are highly irritating to eyes, skin, nose, and lungs, causing severe damage. May cause bronchitis, pneumonia, or edema of lungs. Exposure to concentrations of 0.13 to 0.2 percent can be lethal to humans in a few minutes. Provide ventilation to limit exposure. Reacts with metals, producing hydrogen gas.

5.2.2 Hydrogen Peroxide (H_2O_2). Irritating to eyes, skin, nose, and lungs.

5.2.3 Nitric Acid (HNO_3). Highly corrosive to eyes, skin, nose, and lungs. Vapors cause bronchitis, pneumonia, or edema of lungs. Reaction to inhalation may be delayed as long as 30 hours and still be fatal. Provide ventilation to limit exposure. Strong oxidizer. Hazardous reaction may occur with organic materials such as solvents.

5.2.4 Sodium Hydroxide (NaOH). Causes severe damage to eyes and skin. Inhalation causes irritation to nose, throat, and lungs. Reacts exothermically with limited amounts of water.

5.3 Beryllium is hazardous, and precautions should be taken to minimize exposure.

6.0 Equipment and Supplies

6.1 Sample Collection. Same as Method 5, Section 6.1, with the exception of the following:

6.1.1 Sampling Train. Same as Method 5, Section 6.1.1, with the exception of the following:

6.1.2 Probe Liner. Borosilicate or quartz glass tubing. A heating system capable of maintaining a gas temperature of 120 ±14 °C (248 ±25 °F) at the probe exit during sampling to prevent water condensation may be used.

Note: Do not use metal probe liners.

6.1.3 Filter Holder. Borosilicate glass, with a glass frit filter support and a silicone rubber gasket. Other materials of construction (*e.g.,* stainless steel, Teflon, Viton) may be used, subject to the approval of the Administrator. The holder design shall provide a positive seal against leakage from the outside or around the filter. The holder shall be attached immediately at the outlet of the probe. A heating system capable of maintaining the filter at a minimum temperature in the range of the stack temperature may be used to prevent condensation from occurring.

6.1.4 Impingers. Four Greenburg-Smith impingers connected in series with leak-free ground glass fittings or any similar leak-free noncontaminating fittings. For the first, third, and fourth impingers, use impingers that are modified by replacing the tip with a 13 mm-ID (0.5 in.) glass tube extending to 13 mm (0.5 in.) from the bottom of the flask may be used.

6.2 Sample Recovery. The following items are needed for sample recovery:

6.2.1 Probe Cleaning Rod. At least as long as probe.

6.2.2 Glass Sample Bottles. Leakless, with Teflon-lined caps, 1000 ml.

6.2.3 Petri Dishes. For filter samples, glass or polyethylene, unless otherwise specified by the Administrator.

6.2.4 Graduated Cylinder. 250 ml.

6.2.5 Funnel and Rubber Policeman. To aid in transfer of silica gel to container; not necessary if silica gel is weighed in the field.

6.2.6 Funnel. Glass, to aid in sample recovery.

6.2.7 Plastic Jar. Approximately 300 ml.

6.3 Analysis. The following items are needed for sample analysis:

6.3.1 Atomic Absorption Spectrophotometer. Perkin-Elmer 303, or equivalent, with nitrous oxide/acetylene burner.

6.3.2 Hot Plate.

6.3.3 Perchloric Acid Fume Hood.

7.0 Reagents and Standards

Note: Unless otherwise indicated, it is intended that all reagents conform to the specifications established by the Committee on Analytical Reagents of the American Chemical Society, where such specifications are available; otherwise, use the best available grade.

7.1 Sample Collection. Same as Method 5, Section 7.1, including deionized distilled water conforming to ASTM D 1193–77 or 91 (incorporated by reference—see §61.18), Type 3. The Millipore AA filter is recommended.

7.2 Sample Recovery. Same as Method 5 in appendix A, part 60, Section 7.2, with the addition of the following:

7.2.1 Wash Acid, 50 Percent (V/V) Hydrochloric Acid (HCl). Mix equal volumes of concentrated HCl and water, being careful to add the acid slowly to the water.

7.3 Sample Preparation and Analysis. The following reagents and standards and standards are needed for sample preparation and analysis:

7.3.1 Water. Same as in Section 7.1.

7.3.2. Perchloric Acid ($HClO_4$). Concentrated (70 percent V/V).

7.3.3 Nitric Acid (HNO_3). Concentrated.

7.3.4 Beryllium Powder. Minimum purity 98 percent.

7.3.5 Sulfuric Acid (H_2SO_4) Solution, 12 N. Dilute 33 ml of concentrated $H_2SO_4$to 1 liter with water.

7.3.6 Hydrochloric Acid Solution, 25 Percent HCl (V/V).

7.3.7 Stock Beryllium Standard Solution, 10 µg Be/ml. Dissolve 10.0 mg of Be in 80 ml of 12 N H_2SO_4in a 1000-ml volumetric flask. Dilute to volume with water. This solution is stable for at least one month. Equivalent strength Be stock solutions may be prepared from Be salts such as $BeCl_2$and $Be(NO_3)_2$(98 percent minimum purity).

7.3.8 Working Beryllium Standard Solution, 1 µg Be/ml. Dilute a 10 ml aliquot of the stock beryllium standard solution to 100 ml with 25 percent HCl solution to give a concentration of 1 mg/ml. Prepare this dilute stock solution fresh daily.

8.0 Sample Collection, Preservation, Transport, and Storage

The amount of Be that is collected is generally small, therefore, it is necessary to exercise particular care to prevent contamination or loss of sample.

8.1 Pretest Preparation. Same as Method 5, Section 8.1, except omit Section 8.1.3.

8.2 Preliminary Determinations. Same as Method 5, Section 8.2, with the exception of the following:

8.2.1 Select a nozzle size based on the range of velocity heads to assure that it is not necessary to change the nozzle size in order to maintain isokinetic sampling rates below 28 liters/min (1.0 cfm).

8.2.2 Obtain samples over a period or periods of time that accurately determine the maximum emissions that occur in a 24-hour period. In the case of cyclic operations, perform sufficient sample runs for the accurate determination of the emissions that occur over the duration of the cycle. A minimum sample time of 2 hours per run is recommended.

8.3 Preparation of Sampling Train. Same as Method 5, Section 8.3, with the exception of the following:

8.3.1 Prior to assembly, clean all glassware (probe, impingers, and connectors) by first soaking in wash acid for 2 hours, followed by rinsing with water.

8.3.2 Save a portion of the water for a blank analysis.

8.3.3 Procedures relating to the use of metal probe liners are not applicable.

8.3.4 Probe and filter heating systems are needed only if water condensation is a problem. If this is the case, adjust the heaters to provide a temperature at or above the stack temperature. However, membrane filters such as the Millipore AA are limited to about 107 °C (225 °F). If the stack gas is in excess of about 93 °C (200 °F), consideration should be given to an alternate procedure such as moving the filter holder downstream of the first impinger to insure that the filter does not exceed its temperature limit. After the sampling train has been assembled, turn on and set the probe heating system, if applicable, at the desired operating temperature. Allow time for the temperatures to stabilize. Place crushed ice around the impingers.

Note: An empty impinger may be inserted between the third impinger and the silica gel to remove excess moisture from the sample stream.

8.4 Leak Check Procedures, Sampling Train Operation, and Calculation of Percent Isokinetic. Same as Method 5, Sections 8.4, 8.5, and 8.6, respectively.

8.5 Sample Recovery. Same as Method 5, Section 8.7, except treat the sample as follows: Transfer the probe and impinger assembly to a cleanup area that is clean, protected from the wind, and free of Be contamination. Inspect the train before and during this assembly, and note any abnormal conditions. Treat the sample as follows: Disconnect the probe from the impinger train.

8.5.1 Container No. 1. Same as Method 5, Section 8.7.6.1.

8.5.2 Container No. 2. Place the contents (measured to 1 ml) of the first three impingers into a glass sample bottle. Use the procedures outlined in Section 8.7.6.2 of Method 5, where applicable, to rinse the probe nozzle, probe fitting, probe liner, filter holder, and all glassware between the filter holder and the back half of the third impinger with water. Repeat this procedure with acetone. Place both water and acetone rinse solutions in the sample bottle with the contents of the impingers.

8.5.3 Container No. 3. Same as Method 5, Section 8.7.6.3.

8.6 Blanks.

8.6.1 Water Blank. Save a portion of the water as a blank. Take 200 ml directly from the wash bottle being used and place it in a plastic sample container labeled “H_2O blank.”

8.6.2 Filter. Save two filters from each lot of filters used in sampling. Place these filters in a container labeled “filter blank.”

8.7 Post-test Glassware Rinsing. If an additional test is desired, the glassware can be carefully double rinsed with water and reassembled. However, if the glassware is out of use more than 2 days, repeat the initial acid wash procedure.

9.0 Quality Control

Section	Quality control measure	Effect
8.4, 10.1	Sampling equipment leak checks and calibration	Ensure accuracy and precision of sampling measurements.
10.2	Spectrophotometer calibration	Ensure linearity of spectrophotometer response to standards.
11.5	Check for matrix effects	Eliminate matrix effects.

10.0 Calibration and Standardization

Note: Maintain a laboratory log of all calibrations.

10.1 Sampling Equipment. Same as Method 5, Section 10.0.

10.2 Preparation of Standard Solutions. Pipet 1, 3, 5, 8, and 10 ml of the 1.0 µg Be/ml working standard solution into separate 100 ml volumetric flasks, and dilute to the mark with water. The total amounts of Be in these standards are 1, 3, 5, 8, and 10 µg, respectively.

10.3 Spectrophotometer and Recorder. The Be response may be measured by either peak height or peak area. Analyze an aliquot of the 10-µg standard at 234.8 nm using a nitrous oxide/acetylene flame. Determine the maximum absorbance of the standard, and set this value to read 90 percent of the recorder full scale.

10.4 Calibration Curve.

10.4.1 After setting the recorder scale, analyze an appropriately sized aliquot of each standard and the BLANK (see Section 11) until two consecutive peaks agree within 3 percent of their average value.

10.4.3 Subtract the average peak height (or peak area) of the blank—which must be less than 2 percent of recorder full scale—from the averaged peak heights of the standards. If the blank absorbance is greater than 2 percent of full-scale, the probable cause is Be contamination of a reagent or carry-over of Be from a previous sample. Prepare the calibration curve by plotting the corrected peak height of each standard solution versus the corresponding total Be weight in the standard (in µg).

10.5 Spectrophotometer Calibration Quality Control. Calculate the least squares slope of the calibration curve. The line must pass through the origin or through a point no further from the origin than ±2 percent of the recorder full scale. Multiply the corrected peak height by the reciprocal of the least squares slope to determine the distance each calibration point lies from the theoretical calibration line. The difference between the calculated concentration values and the actual concentrations (i.e., 1, 3, 5, 8, and 10 µg Be) must be less than 7 percent for all standards.

11.0 Analytical Procedure

11.1 Sample Loss Check. Prior to analysis, check the liquid level in Container No. 2. Note on the analytical data sheet whether leakage occurred during transport. If a noticeable amount of leakage occurred, either void the sample or take steps, subject to the approval of the Administrator, to adjust the final results.

11.2 Glassware Cleaning. Before use, clean all glassware according to the procedure of Section 8.3.1.

11.3 Sample Preparation. The digestion of Be samples is accomplished in part in concentrated $HClO_4$.

Note: The sample must be heated to light brown fumes after the initial HNO3 addition; otherwise, dangerous perchlorates may result from the subsequent $HClO_4$digestion. $HClO_4$should be used only under a hood.

11.3.1 Container No. 1. Transfer the filter and any loose particulate matter from Container No. 1 to a 150-ml beaker. Add 35 ml concentrated HNO_3. To oxidize all organic matter, heat on a hotplate until light brown fumes are evident. Cool to room temperature, and add 5 ml 12 N $H_2SO_4$and 5 ml concentrated $HClO_4$.

11.3.2 Container No. 2. Place a portion of the water and acetone sample into a 150 ml beaker, and put on a hotplate. Add portions of the remainder as evaporation proceeds and evaporate to dryness. Cool the residue, and add 35 ml concentrated HNO_3. To oxidize all organic matter, heat on a hotplate until light brown fumes are evident. Cool to room temperature, and add 5 ml 12 N $H_2SO_4$and 5 ml concentrated $HClO_4$. Then proceed with step 11.3.4.

11.3.3 Final Sample Preparation. Add the sample from Section 11.3.2 to the 150-ml beaker from Section 11.3.1. Replace on a hotplate, and evaporate to dryness in a $HClO_4$hood. Cool the residue to room temperature, add 10.0 ml of 25 percent V/V HCl, and mix to dissolve the residue.

11.3.4 Filter and Water Blanks. Cut each filter into strips, and treat each filter individually as directed in Section 11.3.1. Treat the 200-ml water blank as directed in Section 11.3.2. Combine and treat these blanks as directed in Section 11.3.3.

11.4 Spectrophotometer Preparation. Turn on the power; set the wavelength, slit width, and lamp current; and adjust the background corrector as instructed by the manufacturer's manual for the particular atomic absorption spectrophotometer. Adjust the burner and flame characteristics as necessary.

11.5 Analysis. Calibrate the analytical equipment and develop a calibration curve as outlined in Sections 10.4 and 10.5.

11.5.1 Beryllium Samples. Repeat the procedure used to establish the calibration curve with an appropriately sized aliquot of each sample (from Section 11.3.3) until two consecutive peak heights agree within 3 percent of their average value. The peak height of each sample must be greater than 10 percent of the recorder full scale. If the peak height of the sample is off scale on the recorder, further dilute the original source sample to bring the Be concentration into the calibration range of the spectrophotometer.

11.5.2 Run a blank and standard at least after every five samples to check the spectrophotometer calibration. The peak height of the blank must pass through a point no further from the origin than ±2 percent of the recorder full scale. The difference between the measured concentration of the standard (the product of the corrected peak height and the reciprocal of the least squares slope) and the actual concentration of the standard must be less than 7 percent, or recalibration of the analyzer is required.

11.5.3 Check for Matrix Effects (optional). Use the Method of Standard Additions (see Reference 2 in Section 16.0) to check at least one sample from each source for matrix effects on the Be results. If the results of the Method of Standard Additions procedure used on the single source sample do not agree to within 5 percent of the value obtained by the routine atomic absorption analysis, then reanalyze all samples from the source using the Method of Standard Additions procedure.

11.6 Container No. 2 (Silica Gel). Weigh the spent silica gel (or silica gel plus impinger) to the nearest 0.5 g using a balance. (This step may be conducted in the field.)

12.0 Data Analysis and Calculations

Carry out calculations, retaining at least one extra decimal significant figure beyond that of the acquired data. Round off figures only after the final calculation. Other forms of the equations may be used as long as they give equivalent results.

12.1 Nomenclature.

K_1= 0.3858 °K/mm Hg for metric units.

= 17.64 °R/in. Hg for English units.

K_3= 10^{-6}g/µg for metric units.

= 2.2046 × 10^{-9}lb/µg for English units.

m_{Be}= Total weight of beryllium in the source sample.

P_s= Absolute stack gas pressure, mm Hg (in. Hg).

t = Daily operating time, sec/day.

T_s= Absolute average stack gas temperature, °K (°R).

Vm(std)= Dry gas sample volume at standard conditions, scm (scf).

Vw(std)= Volume of water vapor at standard conditions, scm (scf).

12.2 Average Dry Gas Meter Temperature and Average Orifice Pressure Drop, Dry Gas Volume, Volume of Water Vapor Condensed, Moisture Content, Isokinetic Variation, and Stack Gas Velocity and Volumetric Flow Rate. Same as Method 5, Sections 12.2 through 12.5, 12.11, and 12.12, respectively.

12.3 Total Beryllium. For each source sample, correct the average maximum absorbance of the two consecutive samples whose peak heights agree within 3 percent of their average for the contribution of the solution blank (see Sections 11.3.4 and 11.5.2). Correcting for any dilutions if necessary, use the calibration curve and these corrected averages to determine the total weight of Be in each source sample.

12.4 Beryllium Emission Rate. Calculate the daily Hg emission rate, R, using Equation 104–1. For continuous operations, the operating time is equal to 86,400 seconds per day. For cyclic operations, use only the time per day each stack is in operation. The total Hg emission rate from a source will be the summation of results from all stacks.

$$R = \frac{K_1 K_3 t m_{Be} P_s v_s A_s}{T_s \left(V_{m(std)} + V_{w(std)} \right)} \qquad \text{Eq. 104-1}$$

12.5 Determination of Compliance. Each performance test consists of three sample runs. For the purpose of determining compliance with an applicable national emission standard, use the average of the results of all sample runs.

13.0 Method Performance.[Reserved]

14.0 Pollution Prevention.[Reserved]

15.0 Waste Management.[Reserved]

16.0 References

Same as References 1, 2, and 4–11 of Section 16.0 of Method 101 with the addition of the following:

1. Amos, M.D., and J.B. Willis. Use of High-Temperature Pre-Mixed Flames in Atomic Absorption Spectroscopy. Spectrochim. Acta. 22:1325. 1966.

2. Fleet, B., K.V. Liberty, and T. S. West. A Study of Some Matrix Effects in the Determination of Beryllium by Atomic Absorption Spectroscopy in the Nitrous Oxide-Acetylene Flame. Talanta 17:203. 1970.

17.0 Tables, Diagrams, Flowcharts, And Validation Data[Reserved]

Method 105—Determination of Mercury in Wastewater Treatment Plant Sewage Sludges

Note: This method does not include all of the specifications (*e.g.,* equipment and supplies) and procedures (*e.g.,* sampling and analytical) essential to its performance. Some material is incorporated by reference from other methods in this part. Therefore, to obtain reliable results, persons using this method should also have a thorough knowledge of at least the following additional test methods: Method 101 and Method 101A.

1.0 Scope and Application

1.1 Analytes.

Analyte	CAS No.	Sensitivity
Mercury (Hg)	7439–97–6	Dependent upon spectrophotometer and recorder.

1.2 Applicability. This method is applicable for the determination of total organic and inorganic Hg content in sewage sludges.

1.3 Data Quality Objectives. Adherence to the requirements of this method will enhance the quality of the data obtained from air pollutant sampling methods.

2.0 Summary of Method

2.1 Time-composite sludge samples are withdrawn from the conveyor belt subsequent to dewatering and before incineration or drying. A weighed portion of the sludge is digested in aqua regia and is oxidized by potassium permanganate ($KMnO_4$). Mercury in the digested sample is then measured by the conventional spectrophotometric cold-vapor technique.

3.0 Definitions[Reserved]

4.0 Interferences[Reserved]

5.0 Safety

5.1 Disclaimer. This method may involve hazardous materials, operations, and equipment. This test method may not address all of the safety problems associated with its use. It is the responsibility of the user of this test method to establish appropriate safety and health practices and determine the applicability of regulatory limitations prior to performing this test method.

5.2 Corrosive Reagents. The following reagents are hazardous. Personal protective equipment and safe procedures are useful in preventing chemical splashes. If contact occurs, immediately flush with copious amounts of water at least 15 minutes. Remove clothing under shower and decontaminate. Treat residual chemical burn as thermal burn.

5.2.1 Hydrochloric Acid (HCl). Highly toxic. Vapors are highly irritating to eyes, skin, nose, and lungs, causing severe damage. May cause bronchitis, pneumonia, or edema of lungs. Exposure to concentrations of 0.13 to 0.2 percent can be lethal to humans in a few minutes. Provide ventilation to limit exposure. Reacts with metals, producing hydrogen gas.

5.2.2 Nitric Acid (HNO_3). Highly corrosive to eyes, skin, nose, and lungs. Vapors cause bronchitis, pneumonia, or edema of lungs. Reaction to inhalation may be delayed as long as 30 hours and still be fatal. Provide ventilation to limit exposure. Strong oxidizer. Hazardous reaction may occur with organic materials such as solvents.

6.0 Equipment and Supplies

6.1 Sample Collection and Mixing. The following items are required for collection and mixing of the sludge samples:

6.1.1 Container. Plastic, 50-liter.

6.1.2 Scoop. To remove 950-ml (1 quart.) sludge sample.

6.1.3 Mixer. Mortar mixer, wheelbarrow-type, 57-liter (or equivalent) with electricity-driven motor.

6.1.4 Blender. Waring-type, 2-liter.

6.1.5 Scoop. To remove 100-ml and 20-ml samples of blended sludge.

6.1.6 Erlenmeyer Flasks. Four, 125-ml.

6.1.7 Beakers. Glass beakers in the following sizes: 50 ml (1), 200 ml (1), 400 ml (2).

6.2 Sample Preparation and Analysis. Same as Method 101, Section 6.3, with the addition of the following:

6.2.1 Hot Plate.

6.2.2 Desiccator.

6.2.3 Filter Paper. S and S No. 588 (or equivalent).

6.2.4 Beakers. Glass beakers, 200 ml and 400 ml (2 each).

7.0 Reagents and Standards

Note: Unless otherwise indicated, it is intended that all reagents conform to the specifications established by the Committee on Analytical Reagents of the American Chemical Society, where such specifications are available; otherwise, use the best available grade.

7.1 Sample Analysis. Same as Method 101A, Section 7.2, with the following additions and exceptions:

7.1.1 Hydrochloric Acid. The concentrated HCl specified in Method 101A, Section 7.2.4, is not required.

7.1.2 Aqua Regia. Prepare immediately before use. Carefully add one volume of concentrated $HNO_3$to three volumes of concentrated HCl.

8.0 Sample Collection, Preservation, Storage, and Transport

8.1 Sludge Sampling. Withdraw equal volume increments of sludge [for a total of at least 15 liters (16 quarts)] at intervals of 30 min over an 8-hr period, and combine in a rigid plastic container.

8.2 Sludge Mixing. Transfer the entire 15-liter sample to a mortar mixer. Mix the sample for a minimum of 30 min at 30 rpm. Take six 100-ml portions of sludge, and combine in a 2-liter blender. Blend sludge for 5 min; add water as necessary to give a fluid consistency. Immediately after stopping the blender, withdraw four 20-ml portions of blended sludge, and place them in separate, tared 125-ml Erlenmeyer flasks. Reweigh each flask to determine the exact amount of sludge added.

8.3 Sample Holding Time. Samples shall be analyzed within the time specified in the applicable subpart of the regulations.

9.0 Quality Control

Section	Quality control measure	Effect
10.0	Spectrophotometer calibration	Ensure linearity of spectrophotometer response to standards.
11.0	Check for matrix effects	Eliminate matrix effects.

10.0 Calibration and Standardization

Same as Method 101A, Section 10.2.

11.0 Analytical Procedures

11.1 Solids Content of Blended Sludge. Dry one of the 20-ml blended samples from Section 8.2 in an oven at 105 °C (221 °F) to constant weight. Cool in a desiccator, weigh and record the dry weight of the sample.

11.2 Aqua Regia Digestion of Blended Samples.

11.2.1 To each of the three remaining 20-ml samples from Section 8.2 add 25 ml of aqua regia, and digest the on a hot plate at low heat (do not boil) for 30 min, or until samples are a pale yellow-brown color and are void of the dark brown color characteristic of organic matter. Remove from hotplate and allow to cool.

11.2.2 Filter each digested sample separately through an S and S No. 588 filter or equivalent, and rinse the filter contents with 50 ml of water. Transfer the filtrate and filter washing to a 100-ml volumetric flask, and carefully dilute to volume with water.

11.3 Solids Content of the Sludge Before Blending. Remove two 100-ml portions of mixed sludge from the mortar mixer and place in separate, tared 400-ml beakers. Reweigh each beaker to determine the exact amount of sludge added. Dry in oven at 105 °C (221 °F) and cool in a desiccator to constant weight.

11.4 Analysis for Mercury. Analyze the three aqua regia-digested samples using the procedures outlined in Method 101A, Section 11.0.

12.0 Data Analysis and Calculations

12.1 Nomenclature.

C_m= Concentration of Hg in the digested sample, µg/g.

F_{sb}= Weight fraction of solids in the blended sludge.

F_{sm}= Weight fraction of solids in the collected sludge after mixing.

M = Hg content of the sewage sludge (on a dry basis), µg/g.

m = Mass of Hg in the aliquot of digested sample analyzed, µg.

n = number of digested samples (specified in Section 11.2 as three).

V_a= Volume of digested sample analyzed, ml.

V_s= Volume of digested sample, ml.

W_b= Weight of empty sample beaker, g.

W_{bs}= Weight of sample beaker and sample, g.

W_{bd}= Weight of sample beaker and sample after drying, g.

W_f= Weight of empty sample flask, g.

W_{fd}= Weight of sample flask and sample after drying, g.

W_{fs}= Weight of sample flask and sample, g.

12.2 Mercury Content of Digested Sample (Wet Basis).

12.2.1 For each sample analyzed for Hg content, calculate the arithmetic mean maximum absorbance of the two consecutive samples whose peak heights agree ±3 percent of their average. Correct this average value for the contribution of the blank. Use the calibration curve and these corrected averages to determine the final Hg concentration in the solution cell for each sludge sample.

12.2.2 Calculate the average Hg concentration of the digested samples by correcting for any dilutions made to bring the sample into the working range of the spectrophotometer and for the weight of the sludge portion digested, using Equation 105–1.

$$\bar{C}_m = \sum_{i=1}^{n} \left[\frac{mV_s}{V_a\left(W_{fs} - W_f\right)} \right]_i \qquad \text{Eq. 105-1}$$

12.3 Solids Content of Blended Sludge. Determine the solids content of the blended sludge using Equation 105–2.

$$F_{sb} = 1 - \frac{W_{fs} - W_{fd}}{W_{fs} - W_f} \qquad \text{Eq. 105-2}$$

12.4 Solids Content of Bulk Sample (before blending but, after mixing in mortar mixer). Determine the solids content of each 100 ml aliquot (Section 11.3), and average the results.

$$F_{sm} = 1 - \frac{W_{bs} - W_{bd}}{W_{bs} - W_b} \qquad \text{Eq. 105-3}$$

12.5 Mercury Content of Bulk Sample (Dry Basis). Average the results from the three samples from each 8-hr composite sample, and calculate the Hg concentration of the composite sample on a dry basis.

$$M = \frac{\bar{C}_m}{F_{sb}} \qquad \text{Eq. 105-4}$$

13.0 Method Performance

13.1 Range. The range of this method is 0.2 to 5 micrograms per gram; it may be extended by increasing or decreasing sample size.

14.0 Pollution Prevention.[Reserved]

15.0 Waste Management.[Reserved]

16.0 References

1. Bishop, J.N. Mercury in Sediments. Ontario Water Resources Commission. Toronto, Ontario, Canada. 1971.

2. Salma, M. Private Communication. EPA California/Nevada Basin Office. Alameda, California.

3. Hatch, W.R. and W.L. Ott. Determination of Sub-Microgram Quantities of Mercury by Atomic Absorption Spectrophotometry. Analytical Chemistry. 40:2085. 1968.

4. Bradenberger, H., and H. Bader. The Determination of Nanogram Levels of Mercury in Solution by a Flameless Atomic Absorption Technique. Atomic Absorption Newsletter. 6:101. 1967.

5. Analytical Quality Control Laboratory (AQCL). Mercury in Sediment (Cold Vapor Technique) (Provisional Method). U.S. Environmental Protection Agency. Cincinnati, Ohio. April 1972.

6. Kopp, J.F., M.C. Longbottom, and L.B. Lobring. “Cold Vapor” Method for Determining Mercury. Journal AWWA. 64(1):20–25. 1972.

7. Manual of Methods for Chemical Analysis of Water and Wastes. U.S. Environmental Protection Agency. Cincinnati, Ohio. Publication No. EPA–624/2–74–003. December 1974. pp. 118–138.

8. Mitchell, W.J., M.R. Midgett, J. Suggs, R.J. Velton, and D. Albrink. Sampling and Homogenizing Sewage for Analysis. Environmental Monitoring and Support Laboratory, Office of Research and Development, U.S. Environmental Protection Agency. Research Triangle Park, N.C. March 1979. p. 7.

17.0 Tables, Diagrams, Flowcharts, and Validation Data.[Reserved]

Method 106—Determination of Vinyl Chloride Emissions From Stationary Sources

1.0 Scope and Application

1.1 Analytes.

Analyte	CAS No.	Sensitivity
Vinyl Chloride (CH_2:CHCl)	75–01–4	Dependent upon analytical equipment.

1.2 Applicability. This method is applicable for the determination of vinyl chloride emissions from ethylene dichloride, vinyl chloride, and polyvinyl chloride manufacturing processes. This method does not measure vinyl chloride contained in particulate matter.

1.3 Data Quality Objectives. Adherence to the requirements of this method will enhance the quality of the data obtained from air pollutant sampling methods.

2.0 Summary of Method

2.1 An integrated bag sample of stack gas containing vinyl chloride is subjected to GC analysis using a flame ionization detector (FID).

3.0 Definitions.[Reserved]

4.0 Interferences

4.1 Resolution interferences of vinyl chloride may be encountered on some sources. Therefore, the chromatograph operator should select the column and operating parameters best suited to the particular analysis requirements. The selection made is subject to approval of the Administrator. Approval is automatic, provided that confirming data are produced through an adequate supplemental analytical technique, and that the data are available for review by the Administrator. An example of this would be analysis with a different column or GC/mass spectroscopy.

5.0 Safety

5.1 Disclaimer. This method may involve hazardous materials, operations, and equipment. This test method may not address all of the safety problems associated with its use. It is the responsibility of the user of this test method to

establish appropriate safety and health practices and determine the applicability of regulatory limitations prior to performing this test method.

5.2 Toxic Analyte. Care must be exercised to prevent exposure of sampling personnel to vinyl chloride, which is a carcinogen.

6.0 Equipment and Supplies

6.1 Sample Collection (see Figure 106–1). The sampling train consists of the following components:

6.1.1 Probe. Stainless steel, borosilicate glass, Teflon tubing (as stack temperature permits), or equivalent, equipped with a glass wool plug to remove particulate matter.

6.1.2 Sample Lines. Teflon, 6.4-mm outside diameter, of sufficient length to connect probe to bag. Use a new unused piece for each series of bag samples that constitutes an emission test, and discard upon completion of the test.

6.1.3 Quick Connects. Stainless steel, male (2) and female (2), with ball checks (one pair without), located as shown in Figure 106–1.

6.1.4 Tedlar Bags. 50- to 100-liter capacity, to contain sample. Aluminized Mylar bags may be used if the samples are analyzed within 24 hours of collection.

6.1.5 Bag Containers. Rigid leak-proof containers for sample bags, with covering to protect contents from sunlight.

6.1.6 Needle Valve. To adjust sample flow rates.

6.1.7 Pump. Leak-free, with minimum of 2-liter/min capacity.

6.1.8 Charcoal Tube. To prevent admission of vinyl chloride and other organics to the atmosphere in the vicinity of samplers.

6.1.9 Flowmeter. For observing sampling flow rate; capable of measuring a flow range from 0.10 to 1.00 liter/min.

6.1.10 Connecting Tubing. Teflon, 6.4-mm outside diameter, to assemble sampling train (Figure 106–1).

6.1.11 Tubing Fittings and Connectors. Teflon or stainless steel, to assemble sampling training.

6.2 Sample Recovery. Teflon tubing, 6.4-mm outside diameter, to connect bag to GC sample loop. Use a new unused piece for each series of bag samples that constitutes an emission test, and discard upon conclusion of analysis of those bags.

6.3 Analysis. The following equipment is required:

6.3.1 Gas Chromatograph. With FID potentiometric strip chart recorder and 1.0 to 5.0-ml heated sampling loop in automatic sample valve. The chromatographic system shall be capable of producing a response to 0.1-ppmv vinyl chloride that is at least as great as the average noise level. (Response is measured from the average value of the base line to the maximum of the wave form, while standard operating conditions are in use.)

6.3.2 Chromatographic Columns. Columns as listed below. Other columns may be used provided that the precision and accuracy of the analysis of vinyl chloride standards are not impaired and that information is available for review confirming that there is adequate resolution of vinyl chloride peak. (Adequate resolution is defined as an area overlap of not more than 10 percent of the vinyl chloride peak by an interferent peak. Calculation of area overlap is explained in Procedure 1 of appendix C to this part: “Determination of Adequate Chromatographic Peak Resolution.”)

6.3.2.1 Column A. Stainless steel, 2.0 m by 3.2 mm, containing 80/100-mesh Chromasorb 102.

6.3.2.2 Column B. Stainless steel, 2.0 m by 3.2 mm, containing 20 percent GE SF–96 on 60/ip-mesh Chromasorb P AW; or stainless steel, 1.0 m by 3.2 mm containing 80/100-mesh Porapak T. Column B is required as a secondary column if acetaldehyde is present. If used, column B is placed after column A. The combined columns should be operated at 120 °C (250 °F).

6.3.3 Rate Meters (2). Rotameter , or equivalent, 100-ml/min capacity, with flow control valves.

6.3.4 Gas Regulators. For required gas cylinders.

6.3.5 Temperature Sensor. Accurate to ±1 °C (±2 °F), to measure temperature of heated sample loop at time of sample injection.

6.3.6 Barometer. Accurate to ±5 mm Hg, to measure atmospheric pressure around GC during sample analysis.

6.3.7 Pump. Leak-free, with minimum of 100-ml/min capacity.

6.3.8 Recorder. Strip chart type, optionally equipped with either disc or electronic integrator.

6.3.9 Planimeter. Optional, in place of disc or electronic integrator on recorder, to measure chromatograph peak areas.

6.4 Calibration and Standardization.

6.4.1 Tubing. Teflon, 6.4-mm outside diameter, separate pieces marked for each calibration concentration.

Note: The following items are required only if the optional standard gas preparation procedures (Section 10.1) are followed.

6.4.2 Tedlar Bags. Sixteen-inch-square size, with valve; separate bag marked for each calibration concentration.

6.4.3 Syringes. 0.5-ml and 50-µl, gas tight, individually calibrated to dispense gaseous vinyl chloride.

6.4.4 Dry Gas Meter with Temperature and Pressure Gauges. Singer Model DTM–115 with 802 index, or equivalent, to meter nitrogen in preparation of standard gas mixtures, calibrated at the flow rate used to prepare standards.

7.0 Reagents and Standards

7.1 Analysis. The following reagents are required for analysis.

7.1.1 Helium or Nitrogen. Purity 99.9995 percent or greater, for chromatographic carrier gas.

7.1.2 Hydrogen. Purity 99.9995 percent or greater.

7.1.3 Oxygen or Air. Either oxygen (purity 99.99 percent or greater) or air (less than 0.1 ppmv total hydrocarbon content), as required by detector.

7.2 Calibration. Use one of the following options: either Sections 7.2.1 and 7.2.2, or Section 7.2.3.

7.2.1 Vinyl Chloride. Pure vinyl chloride gas certified by the manufacturer to contain a minimum of 99.9 percent vinyl chloride. If the gas manufacturer maintains a bulk cylinder supply of 99.9+ percent vinyl chloride, the certification analysis may have been performed on this supply, rather than on each gas cylinder prepared from this bulk supply.

The date of gas cylinder preparation and the certified analysis must have been affixed to the cylinder before shipment from the gas manufacturer to the buyer.

7.2.2 Nitrogen. Same as described in Section 7.1.1.

7.2.3 Cylinder Standards. Gas mixture standards (50-,10-, and 5 ppmv vinyl chloride) in nitrogen cylinders may be used to directly prepare a chromatograph calibration curve as described in Section 10.3 if the following conditions are met: (a) The manufacturer certifies the gas composition with an accuracy of ±3 percent or better. (b) The manufacturer recommends a maximum shelf life over which the gas concentration does not change by greater than ±5 percent from the certified value. (c) The manufacturer affixes the date of gas cylinder preparation, certified vinyl chloride concentration, and recommended maximum shelf to the cylinder before shipment to the buyer.

7.2.3.1 Cylinder Standards Certification. The manufacturer shall certify the concentration of vinyl chloride in nitrogen in each cylinder by (a) directly analyzing each cylinder and (b) calibrating his analytical procedure on the day of cylinder analysis. To calibrate his analytical procedure, the manufacturer shall use as a minimum, a three point calibration curve. It is recommended that the manufacturer maintain (1) a high concentration calibration standard (between 50 and 100 ppmv) to prepare his calibration curve by an appropriate dilution technique and (2) a low-concentration calibration standard (between 5 and 10 ppmv) to verify the dilution technique used. If the difference between the apparent concentration read from the calibration curve and the true concentration assigned to the low-concentration calibration standard exceeds 5 percent of the true concentration, the manufacturer shall determine the source of error and correct it, then repeat the three-point calibration.

7.2.3.2 Verification of Manufacturer's Calibration Standards. Before using a standard, the manufacturer shall verify each calibration standard (a) by comparing it to gas mixtures prepared (with 99 mole percent vinyl chloride) in accordance with the procedure described in Section 7.2.1 or (b) calibrating it against vinyl chloride cylinder Standard Reference Materials (SRM's) prepared by the National Institute of Standards and Technology, if such SRM's are available. The agreement between the initially determined concentration value and the verification concentration value must be ±5 percent. The manufacturer must reverify all calibration standards on a time interval consistent with the shelf life of the cylinder standards sold.

8.0 Sample Collection, Preservation, Storage, and Transport

Note: Performance of this method should not be attempted by persons unfamiliar with the operation of a gas chromatograph (GC) nor by those who are unfamiliar with source sampling, because knowledge beyond the scope of this presentation is required.

8.1 Bag Leak-Check. The following leak-check procedure is recommended, but not required, prior to sample collection. The post-test leak-check procedure is mandatory. Connect a water manometer and pressurize the bag to 5 to 10 cm H_2O (2 to 4 in. H_2O). Allow to stand for 10 min. Any displacement in the water manometer indicates a leak. Also, check the rigid container for leaks in this manner.

Note: An alternative leak-check method is to pressurize the bag to 5 to 10 cm H2O and allow it to stand overnight. A deflated bag indicates a leak. For each sample bag in its rigid container, place a rotameter in line between the bag and the pump inlet. Evacuate the bag. Failure of the rotameter to register zero flow when the bag appears to be empty indicates a leak.

8.2 Sample Collection. Assemble the sample train as shown in Figure 106–1. Join the quick connects as illustrated, and determine that all connection between the bag and the probe are tight. Place the end of the probe at the centroid of the stack and start the pump with the needle valve adjusted to yield a flow that will fill over 50 percent of bag volume in the specific sample period. After allowing sufficient time to purge the line several times, change the vacuum line from the container to the bag and evacuate the bag until the rotameter indicates no flow. Then reposition the sample and vacuum lines and begin the actual sampling, keeping the rate proportional to the stack velocity. At all times, direct the gas exiting the rotameter away from sampling personnel. At the end of the sample period, shut off the pump, disconnect the sample line from the bag, and disconnect the vacuum line from the bag container. Protect the bag container from sunlight.

8.3 Sample Storage. Keep the sample bags out of direct sunlight. When at all possible, analysis is to be performed within 24 hours, but in no case in excess of 72 hours of sample collection. Aluminized Mylar bag samples must be analyzed within 24 hours.

8.4 Post-test Bag Leak-Check. Subsequent to recovery and analysis of the sample, leak-check the sample bag according to the procedure outlined in Section 8.1.

9.0 Quality Control

Section	Quality control measure	Effect
10.3	Chromatograph calibration	Ensure precision and accuracy of chromatograph.

10.0 Calibration and Standardization

Note: Maintain a laboratory log of all calibrations.

10.1 Preparation of Vinyl Chloride Standard Gas Mixtures. (Optional Procedure-delete if cylinder standards are used.) Evacuate a 16-inch square Tedlar bag that has passed a leak-check (described in Section 8.1) and meter in 5.0 liters of nitrogen. While the bag is filling, use the 0.5-ml syringe to inject 250 µl of 99.9+ percent vinyl chloride gas through the wall of the bag. Upon withdrawing the syringe, immediately cover the resulting hole with a piece of adhesive tape. The bag now contains a vinyl chloride concentration of 50 ppmv. In a like manner use the 50 µl syringe to prepare gas mixtures having 10-and 5-ppmv vinyl chloride concentrations. Place each bag on a smooth surface and alternately depress opposite sides of the bag 50 times to further mix the gases. These gas mixture standards may be used for 10 days from the date of preparation, after which time new gas mixtures must be prepared. (Caution: Contamination may be a problem when a bag is reused if the new gas mixture standard is a lower concentration than the previous gas mixture standard.)

10.2 Determination of Vinyl Chloride Retention Time. (This section can be performed simultaneously with Section 10.3.) Establish chromatograph conditions identical with those in Section 11.3. Determine proper attenuator position. Flush the sampling loop with helium or nitrogen and activate the sample valve. Record the injection time, sample loop temperature, column temperature, carrier gas flow rate, chart speed, and attenuator setting. Record peaks and detector responses that occur in the absence of vinyl chloride. Maintain conditions with the equipment plumbing arranged identically to Section 11.2, and flush the sample loop for 30 seconds at the rate of 100 ml/min with one of the vinyl chloride calibration mixtures. Then activate the sample valve. Record the injection time. Select the peak that corresponds to vinyl chloride. Measure the distance on the chart from the injection time to the time at which the peak maximum occurs. This quantity divided by the chart speed is defined as the retention time. Since other organics may be present in the sample, positive identification of the vinyl chloride peak must be made.

10.3 Preparation of Chromatograph Calibration Curve. Make a GC measurement of each gas mixture standard (described in Section 7.2.3 or 10.1) using conditions identical to those listed in Sections 11.2 and 11.3. Flush the sampling loop for 30 seconds at the rate of 100 ml/min with one of the standard mixtures, and activate the sample valve. Record the concentration of vinyl chloride injected (C_c), attenuator setting, chart speed, peak area, sample loop temperature, column temperature, carrier gas flow rate, and retention time. Record the barometric pressure. Calculate A_c, the peak area multiplied by the attenuator setting. Repeat until two consecutive injection areas are within 5 percent, then plot the average of those two values versus C_c. When the other standard gas mixtures have been similarly analyzed and plotted, draw a straight line through the points derived by the least squares method. Perform calibration daily, or before and after the analysis of each emission test set of bag samples, whichever is more frequent. For each group of sample analyses, use the average of the two calibration curves which bracket that group to determine the respective sample concentrations. If the two calibration curves differ by more than 5 percent from their mean value, then report the final results by both calibration curves.

11.0 Analytical Procedure

11.2 Sample Recovery. With a new piece of Teflon tubing identified for that bag, connect a bag inlet valve to the gas chromatograph sample valve. Switch the valve to receive gas from the bag through the sample loop. Arrange the equipment so the sample gas passes from the sample valve to 100-ml/min rotameter with flow control valve followed

by a charcoal tube and a 1-in. H_2O pressure gauge. Maintain the sample flow either by a vacuum pump or container pressurization if the collection bag remains in the rigid container. After sample loop purging is ceased, allow the pressure gauge to return to zero before activating the gas sampling valve.

11.3 Analysis.

11.3.1 Set the column temperature to 100 °C (210 °F) and the detector temperature to 150 °C (300 °F). When optimum hydrogen and oxygen (or air) flow rates have been determined, verify and maintain these flow rates during all chromatography operations. Using helium or nitrogen as the carrier gas, establish a flow rate in the range consistent with the manufacturer's requirements for satisfactory detector operation. A flow rate of approximately 40 ml/min should produce adequate separations. Observe the base line periodically and determine that the noise level has stabilized and that base line drift has ceased. Purge the sample loop for 30 seconds at the rate of 100 ml/min, shut off flow, allow the sample loop pressure to reach atmospheric pressure as indicated by the H_2O manometer, then activate the sample valve. Record the injection time (the position of the pen on the chart at the time of sample injection), sample number, sample loop temperature, column temperature, carrier gas flow rate, chart speed, and attenuator setting. Record the barometric pressure. From the chart, note the peak having the retention time corresponding to vinyl chloride as determined in Section 10.2. Measure the vinyl chloride peak area, A_m, by use of a disc integrator, electronic integrator, or a planimeter. Measure and record the peak heights, H_m. Record $A_m$and retention time. Repeat the injection at least two times or until two consecutive values for the total area of the vinyl chloride peak agree within 5 percent of their average. Use the average value for these two total areas to compute the bag concentration.

11.3.2 Compare the ratio of $H_m$to $A_m$for the vinyl chloride sample with the same ratio for the standard peak that is closest in height. If these ratios differ by more than 10 percent, the vinyl chloride peak may not be pure (possibly acetaldehyde is present) and the secondary column should be employed (see Section 6.3.2.2).

11.4 Determination of Bag Water Vapor Content. Measure the ambient temperature and barometric pressure near the bag. From a water saturation vapor pressure table, determine and record the water vapor content of the bag, B_{wb}, as a decimal figure. (Assume the relative humidity to be 100 percent unless a lesser value is known.)

12.0 Calculations and Data Analysis

12.1 Nomenclature.

A_m= Measured peak area.

A_f= Attenuation factor.

B_{wb}= Water vapor content of the bag sample, as analyzed, volume fraction.

C_b= Concentration of vinyl chloride in the bag, ppmv.

C_c= Concentration of vinyl chloride in the standard sample, ppmv.

P_i= Laboratory pressure at time of analysis, mm Hg.

P_r= Reference pressure, the laboratory pressure recorded during calibration, mm Hg.

T_i= Absolute sample loop temperature at the time of analysis, °K (°R).

T_r= Reference temperature, the sample loop temperature recorded during calibration, °K (°R).

12.2 Sample Peak Area. Determine the sample peak area, A_c, as follows:

$$A_c = A_m A_f \qquad \text{Eq. 106-1}$$

12.3 Vinyl Chloride Concentration. From the calibration curves prepared in Section 10.3, determine the average concentration value of vinyl chloride, C_c, that corresponds to A_c, the sample peak area. Calculate the concentration of vinyl chloride in the bag, C_b, as follows:

$$C_b = \frac{C_c P_r T_i}{P_i T_r \left(1 - B_{wb}\right)} \qquad \text{Eq. 106-2}$$

13.0 Method Performance

13.1 Analytical Range. This method is designed for the 0.1 to 50 parts per million by volume (ppmv) range. However, common gas chromatograph (GC) instruments are capable of detecting 0.02 ppmv vinyl chloride. With proper calibration, the upper limit may be extended as needed.

14.0 Pollution Prevention,[Reserved]

15.0 Waste Management,[Reserved]

16.0 References

1. Brown D.W., E.W. Loy, and M.H. Stephenson. Vinyl Chloride Monitoring Near the B. F. Goodrich Chemical Company in Louisville, KY. Region IV, U.S. Environmental Protection Agency, Surveillance and Analysis Division, Athens, GA. June 24, 1974.

2. G.D. Clayton and Associates. Evaluation of a Collection and Analytical Procedure for Vinyl Chloride in Air. U.S. Environmental Protection Agency, Research Triangle Park, N.C. EPA Contract No. 68–02–1408, Task Order No. 2, EPA Report No. 75–VCL–1. December 13, 1974.

3. Midwest Research Institute. Standardization of Stationary Source Emission Method for Vinyl Chloride. U.S. Environmental Protection Agency, Research Triangle Park, N.C. Publication No. EPA–600/4–77–026. May 1977.

4. Scheil, G. and M.C. Sharp. Collaborative Testing of EPA Method 106 (Vinyl Chloride) that Will Provide for a Standardized Stationary Source Emission Measurement Method. U.S. Environmental Protection Agency, Research Triangle Park, N.C. Publication No. EPA 600/4–78–058. October 1978.

17.0 Tables, Diagrams Flowcharts, and Validation Data.

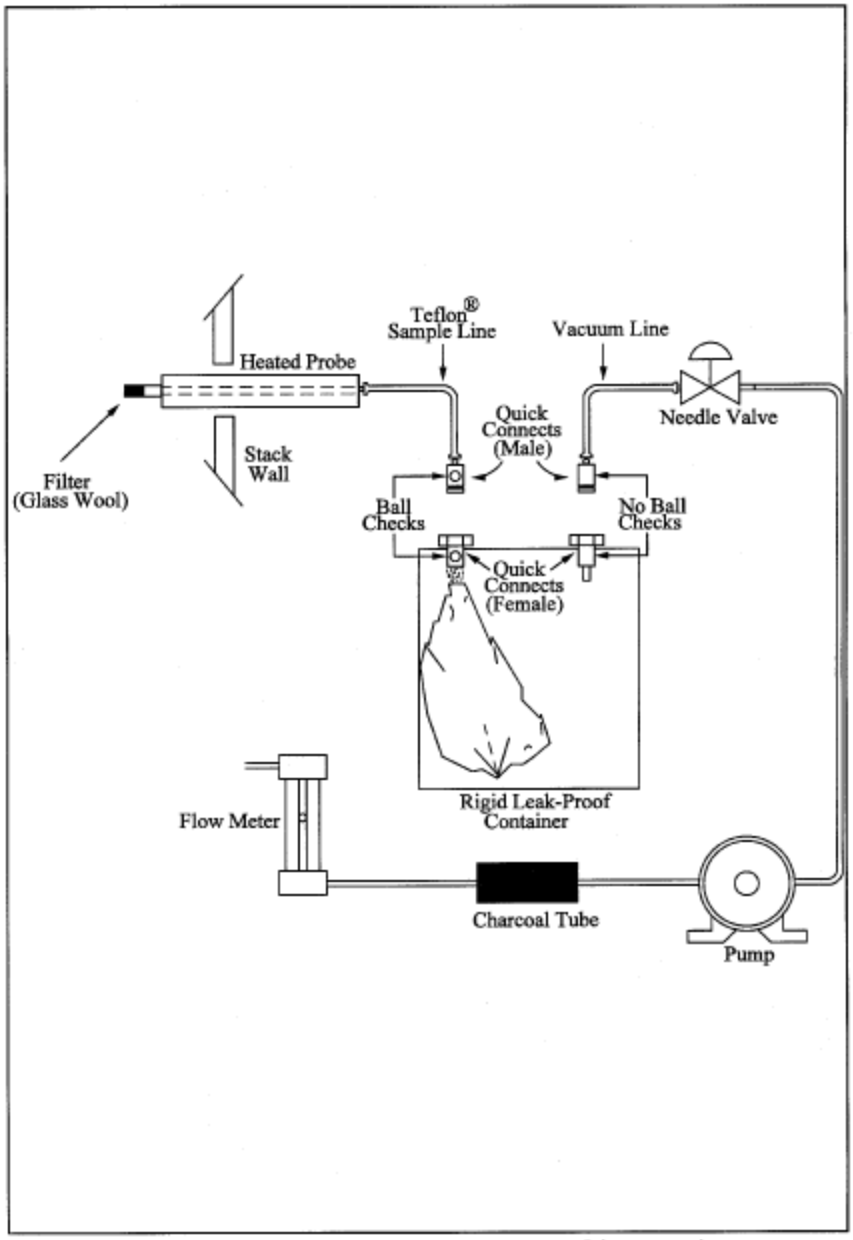

Figure 106-1. Integrated-bag sampling train.

View or download PDF

Method 107—Determination of Vinyl Chloride Content of In-Process Wastewater Samples, and Vinyl Chloride Content of Polyvinyl Chloride Resin Slurry, Wet Cake, and Latex Samples

Note: Performance of this method should not be attempted by persons unfamiliar with the operation of a gas chromatograph (GC) nor by those who are unfamiliar with source sampling, because knowledge beyond the scope of this presentation is required. This method does not include all of the specifications (*e.g.,* equipment and supplies) and procedures (*e.g.,* sampling and analytical) essential to its performance. Some material is incorporated by reference from other methods in this part. Therefore, to obtain reliable results, persons using this method should have a thorough knowledge of at least the following additional test methods: Method 106.

1.0 Scope and Application

1.1 Analytes.

Analyte	CAS No.	Sensitivity
Vinyl Chloride (CH_2:CHCl)	75–01–4	Dependent upon analytical equipment.

1.2 Applicability. This method is applicable for the determination of the vinyl chloride monomer (VCM) content of in-process wastewater samples, and the residual vinyl chloride monomer (RCVM) content of polyvinyl chloride (PVC) resins, wet, cake, slurry, and latex samples. It cannot be used for polymer in fused forms, such as sheet or cubes. This method is not acceptable where methods from section 304(h) of the Clean Water Act, 33 U.S.C. 1251 *et seq.* (the Federal Water Pollution Control Amendments of 1972 as amended by the Clean Water Act of 1977) are required.

1.3 Data Quality Objectives. Adherence to the requirements of this method will enhance the quality of the data obtained from air pollutant sampling methods.

2.0 Summary of Method

2.1 The basis for this method relates to the vapor equilibrium that is established at a constant known temperature in a closed system between RVCM, PVC resin, water, and air. The RVCM in a PVC resin will equilibrate rapidly in a closed vessel, provided that the temperature of the PVC resin is maintained above the glass transition temperature of that specific resin.

2.2 A sample of PVC or in-process wastewater is collected in a vial or bottle and is conditioned. The headspace in the vial or bottle is then analyzed for vinyl chloride using gas chromatography with a flame ionization detector.

3.0 Definitions[Reserved]

4.0 Interferences

4.1 The chromatograph columns and the corresponding operating parameters herein described normally provide an adequate resolution of vinyl chloride; however, resolution interferences may be encountered on some sources. Therefore, the chromatograph operator shall select the column and operating parameters best suited to his particular analysis requirements, subject to the approval of the Administrator. Approval is automatic provided that confirming data are produced through an adequate supplemental analytical technique, such as analysis with a different column or GC/mass spectroscopy, and that these data are made available for review by the Administrator.

5.0 Safety

5.1 Disclaimer. This method may involve hazardous materials, operations, and equipment. This test method may not address all of the safety problems associated with its use. It is the responsibility of the user of this test method to establish appropriate safety and health practices and determine the applicability of regulatory limitations prior to performing this test method.

5.2 Toxic Analyte. Care must be exercised to prevent exposure of sampling personnel to vinyl chloride, which is a carcinogen. Do not release vinyl chloride to the laboratory atmosphere during preparation of standards. Venting or purging with VCM/air mixtures must be held to a minimum. When they are required, the vapor must be routed to outside air. Vinyl chloride, even at low ppm levels, must never be vented inside the laboratory. After vials have been analyzed, the gas must be vented prior to removal of the vial from the instrument turntable. Vials must be vented through a hypodermic needle connected to an activated charcoal tube to prevent release of vinyl chloride into the laboratory atmosphere. The charcoal must be replaced prior to vinyl chloride breakthrough.

6.0 Equipment and Supplies

6.1 Sample Collection. The following equipment is required:

6.1.1 Glass bottles. 60-ml (2-oz) capacity, with wax-lined screw-on tops, for PVC samples.

6.1.2 Glass Vials. Headspace vials, with Teflon-faced butyl rubber sealing discs, for water samples.

6.1.3 Adhesive Tape. To prevent loosening of bottle tops.

6.2 Sample Recovery. The following equipment is required:

6.2.1 Glass Vials. Headspace vials, with butyl rubber septa and aluminum caps. Silicone rubber is not acceptable.

6.2.2 Analytical Balance. Capable of determining sample weight within an accuracy of ±1 percent.

6.2.3 Vial Sealer. To seal headspace vials.

6.2.4 Syringe. 100-ml capacity.

6.3 Analysis. The following equipment is required:

6.3.1 Headspace Sampler and Chromatograph. Capable of sampling and analyzing a constant amount of headspace gas from a sealed vial, while maintaining that vial at a temperature of 90 °C ±0.5 °C (194 °F ±0.9 °F). The chromatograph shall be equipped with a flame ionization detector (FID). Perkin-Elmer Corporation Models F–40, F–42, F–45, HS–6, and HS–100, and Hewlett-Packard Corporation Model 19395A have been found satisfactory. Chromatograph backflush capability may be required.

6.3.2 Chromatographic Columns. Stainless steel 1 m by 3.2 mm and 2 m by 3.2 mm, both containing 50/80-mesh Porapak Q. Other columns may be used provided that the precision and accuracy of the analysis of vinyl chloride standards are not impaired and information confirming that there is adequate resolution of the vinyl chloride peak are available for review. (Adequate resolution is defined as an area overlap of not more than 10 percent of the vinyl chloride peak by an interferant peak. Calculation of area overlap is explained in Procedure 1 of appendix C to this part: “Determination of Adequate Chromatographic Peak Resolution.”) Two 1.83 m columns, each containing 1 percent Carbowax 1500 on Carbopak B, have been found satisfactory for samples containing acetaldehyde.

6.3.3 Temperature Sensor. Range 0 to 100 °C (32 to 212 °F) accurate to 0.1 °C.

6.3.4 Integrator-Recorder. To record chromatograms.

6.3.5 Barometer. Accurate to 1 mm Hg.

6.3.6 Regulators. For required gas cylinders.

6.3.7 Headspace Vial Pre-Pressurizer. Nitrogen pressurized hypodermic needle inside protective shield.

7.0 Reagents and Standards

7.1 Analysis. Same as Method 106, Section 7.1, with the addition of the following:

7.1.1 Water. Interference-free.

7.2 Calibration. The following items are required for calibration:

7.2.1 Cylinder Standards (4). Gas mixture standards (50-, 500-, 2000- and 4000-ppm vinyl chloride in nitrogen cylinders). Cylinder standards may be used directly to prepare a chromatograph calibration curve as described in Section 10.3, if the following conditions are met: (a) The manufacturer certifies the gas composition with an accuracy of ±3 percent or better (see Section 7.2.1.1). (b) The manufacturer recommends a maximum shelf life over which the gas concentration does not change by greater than ±5 percent from the certified value. (c) The manufacturer affixes

the date of gas cylinder preparation, certified vinyl chloride concentration, and recommended maximum shelf life to the cylinder before shipment to the buyer.

7.2.1.1 Cylinder Standards Certification. The manufacturer shall certify the concentration of vinyl chloride in nitrogen in each cylinder by (a) directly analyzing each cylinder and (b) calibrating the analytical procedure on the day of cylinder analysis. To calibrate the analytical procedure, the manufacturer shall use, as a minimum, a 3-point calibration curve. It is recommended that the manufacturer maintain (1) a high-concentration calibration standard (between 4000 and 8000 ppm) to prepare the calibration curve by an appropriate dilution technique and (2) a low-concentration calibration standard (between 50 and 500 ppm) to verify the dilution technique used. If the difference between the apparent concentration read from the calibration curve and the true concentration assigned to the low-concentration calibration standard exceeds 5 percent of the true concentration, the manufacturer shall determine the source of error and correct it, then repeat the 3-point calibration.

7.2.1.2 Verification of Manufacturer's Calibration Standards. Before using, the manufacturer shall verify each calibration standard by (a) comparing it to gas mixtures prepared (with 99 mole percent vinyl chloride) in accordance with the procedure described in Section 10.1 of Method 106 or by (b) calibrating it against vinyl chloride cylinder Standard Reference Materials (SRMs) prepared by the National Institute of Standards and Technology, if such SRMs are available. The agreement between the initially determined concentration value and the verification concentration value must be within 5 percent. The manufacturer must reverify all calibration standards on a time interval consistent with the shelf life of the cylinder standards sold.

8.0 Sample Collection, Preservation, Storage, and Transport

8.1 Sample Collection.

8.1.1 PVC Sampling. Allow the resin or slurry to flow from a tap on the tank or silo until the tap line has been well purged. Extend and fill a 60-ml sample bottle under the tap, and immediately tighten a cap on the bottle. Wrap adhesive tape around the cap and bottle to prevent the cap from loosening. Place an identifying label on each bottle, and record the date, time, and sample location both on the bottles and in a log book.

8.1.2 Water Sampling. At the sampling location fill the vials bubble-free to overflowing so that a convex meniscus forms at the top. The excess water is displaced as the sealing disc is carefully placed, with the Teflon side down, on the opening of the vial. Place the aluminum seal over the disc and the neck of the vial, and crimp into place. Affix an identifying label on the bottle, and record the date, time, and sample location both on the vials and in a log book.

8.2 Sample Storage. All samples must be analyzed within 24 hours of collection, and must be refrigerated during this period.

9.0 Quality Control

Section	Quality control measure	Effect
10.3	Chromatograph calibration	Ensure precision and accuracy of chromatograph.

10.0 Calibration and Standardization

Note: Maintain a laboratory log of all calibrations.

10.1 Preparation of Standards. Calibration standards are prepared as follows: Place 100 µl or about two equal drops of distilled water in the sample vial, then fill the vial with the VCM/nitrogen standard, rapidly seat the septum, and seal with the aluminum cap. Use a1/8-in. stainless steel line from the cylinder to the vial. Do not use rubber or Tygon tubing. The sample line from the cylinder must be purged (into a properly vented hood) for several minutes prior to filling the vials. After purging, reduce the flow rate to between 500 and 1000 cc/min. Place end of tubing into vial (near bottom). Position a septum on top of the vial, pressing it against the1/8-in. filling tube to minimize the size of the vent opening. This is necessary to minimize mixing air with the standard in the vial. Each vial is to be purged with standard for 90 seconds, during which time the filling tube is gradually slid to the top of the vial. After the 90 seconds, the tube is removed with the septum, simultaneously sealing the vial. Practice will be necessary to develop good technique.

Rubber gloves should be worn during the above operations. The sealed vial must then be pressurized for 60 seconds using the vial prepressurizer. Test the vial for leakage by placing a drop of water on the septum at the needle hole. Prepressurization of standards is not required unless samples have been prepressurized.

10.2 Analyzer Calibration. Calibration is to be performed each 8-hour period the chromatograph is used. Alternatively, calibration with duplicate 50-, 500-, 2,000-, and 4,000-ppm standards (hereafter described as a four-point calibration) may be performed on a monthly basis, provided that a calibration confirmation test consisting of duplicate analyses of an appropriate standard is performed once per plant shift, or once per chromatograph carrousel operation (if the chromatograph operation is less frequent than once per shift). The criterion for acceptance of each calibration confirmation test is that both analyses of 500-ppm standards [2,000-ppm standards if dispersion resin (excluding latex resin) samples are being analyzed] must be within 5 percent of the most recent four-point calibration curve. If this criterion is not met, then a complete four-point calibration must be performed before sample analyses can proceed.

10.3 Preparation of Chromatograph Calibration Curve. Prepare two vials each of 50-, 500-, 2,000-, and 4,000-ppm standards. Run the calibration samples in exactly the same manner as regular samples. Plot A_s, the integrator area counts for each standard sample, versus C_c, the concentration of vinyl chloride in each standard sample. Draw a straight line through the points derived by the least squares method.

11.0 Analytical Procedure

11.1 Preparation of Equipment. Install the chromatographic column and condition overnight at 160 °C (320 °F). In the first operation, Porapak columns must be purged for 1 hour at 230 °C (450 °F).

Do not connect the exit end of the column to the detector while conditioning. Hydrogen and air to the detector must be turned off while the column is disconnected.

11.2 Flow Rate Adjustments. Adjust flow rates as follows:

11.2.1. Nitrogen Carrier Gas. Set regulator on cylinder to read 50 psig. Set regulator on chromatograph to produce a flow rate of 30.0 cc/min. Accurately measure the flow rate at the exit end of the column using the soap film flowmeter and a stopwatch, with the oven and column at the analysis temperature. After the instrument program advances to the “B” (backflush) mode, adjust the nitrogen pressure regulator to exactly balance the nitrogen flow rate at the detector as was obtained in the “A” mode.

11.2.2. Vial Prepressurizer Nitrogen.

11.2.2.1 After the nitrogen carrier is set, solve the following equation and adjust the pressure on the vial prepressurizer accordingly.

$$P = \frac{T_1}{T_2}\left[P_1 - \frac{P_{w1} - P_{w2}}{7.50}\right] - 10kPa \qquad \text{Eq. 107-1}$$

Where:

T_1= Ambient temperature, °K (°R).

T_2= Conditioning bath temperature, °K (°R).

P_1= Gas chromatograph absolute dosing pressure (analysis mode), k Pa.

P_{w1}= Water vapor pressure 525.8 mm Hg @ 90 °C.

P_{w2}= Water vapor pressure 19.8 mm Hg @ 22 °C.

7.50 = mm Hg per k Pa.

10 kPa = Factor to adjust the prepressurized pressure to slightly less than the dosing pressure.

11.2.2.2 Because of gauge errors, the apparatus may over-pressurize the vial. If the vial pressure is at or higher than the dosing pressure, an audible double injection will occur. If the vial pressure is too low, errors will occur on resin samples because of inadequate time for head-space gas equilibrium. This condition can be avoided by running several standard gas samples at various pressures around the calculated pressure, and then selecting the highest pressure that does not produce a double injection. All samples and standards must be pressurized for 60 seconds using the vial prepressurizer. The vial is then placed into the 90 °C conditioning bath and tested for leakage by placing a drop of water on the septum at the needle hole. A clean, burr-free needle is mandatory.

11.2.3. Burner Air Supply. Set regulator on cylinder to read 50 psig. Set regulator on chromatograph to supply air to burner at a rate between 250 and 300 cc/min. Check with bubble flowmeter.

11.2.4. Hydrogen Supply. Set regulator on cylinder to read 30 psig. Set regulator on chromatograph to supply approximately 35 ±5 cc/min. Optimize hydrogen flow to yield the most sensitive detector response without extinguishing the flame. Check flow with bubble meter and record this flow.

11.3 Temperature Adjustments. Set temperatures as follows:

11.3.1. Oven (chromatograph column), 140 °C (280 °F).

11.3.2. Dosing Line, 150 °C (300 °F).

11.3.3. Injection Block, 170 °C (340 °F).

11.3.4. Sample Chamber, Water Temperature, 90 °C ±1.0 °C (194 °F ±1.8 °F).

11.4 Ignition of Flame Ionization Detector. Ignite the detector according to the manufacturer's instructions.

11.5 Amplifier Balance. Balance the amplifier according to the manufacturer's instructions.

11.6 Programming the Chromatograph. Program the chromatograph as follows:

11.6.1. I—Dosing or Injection Time. The normal setting is 2 seconds.

11.6.2. A—Analysis Time. The normal setting is approximately 70 percent of the VCM retention time. When this timer terminates, the programmer initiates backflushing of the first column.

11.6.3. B—Backflushing Time. The normal setting is double the analysis time.

11.6.4. W—Stabilization Time. The normal setting is 0.5 min to 1.0 min.

11.6.5. X—Number of Analyses Per Sample. The normal setting is one.

11.7. Sample Treatment. All samples must be recovered and analyzed within 24 hours after collection.

11.7.1 Resin Samples. The weight of the resin used must be between 0.1 and 4.5 grams. An exact weight must be obtained (within ±1 percent) for each sample. In the case of suspension resins, a volumetric cup can be prepared for holding the required amount of sample. When the cup is used, open the sample bottle, and add the cup volume of resin to the tared sample vial (tared, including septum and aluminum cap). Obtain the exact sample weight, add 100 ml or about two equal drops of water, and immediately seal the vial. Report this value on the data sheet; it is required for calculation of RVCM. In the case of dispersion resins, the cup cannot be used. Weigh the sample in an aluminum dish, transfer the sample to the tared vial, and accurately weigh it in the vial. After prepressurization of the samples,

condition them for a minimum of 1 hour in the 90 °C (190 °F) bath. Do not exceed 5 hours. Prepressurization is not required if the sample weight, as analyzed, does not exceed 0.2 gram. It is also not required if solution of the prepressurization equation yields an absolute prepressurization value that is within 30 percent of the atmospheric pressure.

Note: Some aluminum vial caps have a center section that must be removed prior to placing into sample tray. If the cap is not removed, the injection needle will be damaged.

11.7.2 Suspension Resin Slurry and Wet Cake Samples. Decant the water from a wet cake sample, and turn the sample bottle upside down onto a paper towel. Wait for the water to drain, place approximately 0.2 to 4.0 grams of the wet cake sample in a tared vial (tared, including septum and aluminum cap) and seal immediately. Then determine the sample weight (1 percent). All samples weighing over 0.2 gram, must be prepressurized prior to conditioning for 1 hour at 90 °C (190 °F), except as noted in Section 11.7.1. A sample of wet cake is used to determine total solids (TS). This is required for calculating the RVCM.

11.7.3 Dispersion Resin Slurry and Geon Latex Samples. The materials should not be filtered. Sample must be thoroughly mixed. Using a tared vial (tared, including septum and aluminum cap) add approximately eight drops (0.25 to 0.35 g) of slurry or latex using a medicine dropper. This should be done immediately after mixing. Seal the vial as soon as possible. Determine sample weight (1 percent). Condition the vial for 1 hour at 90 °C (190 °F) in the analyzer bath. Determine the TS on the slurry sample (Section 11.10).

11.7.4 In-process Wastewater Samples. Using a tared vial (tared, including septum and aluminum cap) quickly add approximately 1 cc of water using a medicine dropper. Seal the vial as soon as possible. Determine sample weight (1 percent). Condition the vial for 1 hour at 90 °C (190 °F) in the analyzer bath.

11.8 Preparation of Sample Turntable.

11.8.1 Before placing any sample into turntable, be certain that the center section of the aluminum cap has been removed. The numbered sample vials should be placed in the corresponding numbered positions in the turntable. Insert samples in the following order:

11.8.1.1 Positions 1 and 2. Old 2000-ppm standards for conditioning. These are necessary only after the analyzer has not been used for 24 hours or longer.

11.8.1.2 Position 3. 50-ppm standard, freshly prepared.

11.8.1.3 Position 4. 500-ppm standard, freshly prepared.

11.8.1.4 Position 5. 2000-ppm standard, freshly prepared.

11.8.1.5 Position 6. 4000-ppm standard, freshly prepared.

11.8.1.6 Position 7. Sample No. 7 (This is the first sample of the day, but is given as 7 to be consistent with the turntable and the integrator printout.)

11.8.2 After all samples have been positioned, insert the second set of 50-, 500-, 2000-, and 4000-ppm standards. Samples, including standards, must be conditioned in the bath of 90 °C (190 °F) for a minimum of one hour and a maximum of five hours.

11.9 Start Chromatograph Program. When all samples, including standards, have been conditioned at 90 °C (190 °F) for at least one hour, start the analysis program according to the manufacturer's instructions. These instructions must be carefully followed when starting and stopping a program to prevent damage to the dosing assembly.

11.10 Determination of Total Solids. For wet cake, slurry, resin solution, and PVC latex samples, determine TS for each sample by accurately weighing approximately 3 to 4 grams of sample in an aluminum pan before and after placing in a draft oven (105 to 110 °C (221 to 230 °F)). Samples must be dried to constant weight. After first weighing,

return the pan to the oven for a short period of time, and then reweigh to verify complete dryness. The TS are then calculated as the final sample weight divided by initial sample weight.

12.0 Calculations and Data Analysis

12.1 Nomenclature.

A_s= Chromatogram area counts of vinyl chloride for the sample, area counts.

A_s= Chromatogram area counts of vinyl chloride for the sample.

C_c= Concentration of vinyl chloride in the standard sample, ppm.

K_p= Henry's Law Constant for VCM in PVC 90 °C, 6.52×10^{-6}g/g/mm Hg.

K_w= Henry's Law Constant for VCM in water 90 °C, 7×10^{-7}g/g/mm Hg.

M_v= Molecular weight of VCM, 62.5 g/mole.

m = Sample weight, g.

P_a= Ambient atmospheric pressure, mm Hg.

R = Gas constant, (62360^3 ml) (mm Hg)/(mole)(°K).

R_f= Response factor in area counts per ppm VCM.

R_s= Response factor, area counts/ppm.

T_l= Ambient laboratory temperature, °K.

TS = Total solids expressed as a decimal fraction.

T_2= Equilibrium temperature, °K.

V_g= Volume of vapor phase, ml.

$$= V_v - \frac{m(TS)}{1.36} - \frac{m(1-TS)}{0.9653}$$

V_v= Vial volume,^{3} ml.

1.36 = Density of PVC at 90 °C, g/^{3} ml.

0.9653 = Density of water at 90 °C, g/^{3} ml.

12.2 Response Factor. If the calibration curve described in Section 10.3 passes through zero, an average response factor, R_f, may be used to facilitate computation of vinyl chloride sample concentrations.

12.2.1 To compute R_f, first compute a response factor, R_s, for each sample as follows:

$$R_s = \frac{A_s}{C_c} \qquad \text{Eq. 107-2}$$

12.2.2 Sum the individual response factors, and calculate R_f. If the calibration curve does not pass through zero, use the calibration curve to determine each sample concentration.

12.3 Residual Vinyl Chloride Monomer Concentration, (C_{rvc}) or Vinyl Chloride Monomer Concentration. Calculate C_{rvc}in ppm or mg/kg as follows:

$$C_{rvc} = \frac{A_s P_a}{R_f T_1}\left[\frac{M_v V_g}{Rm} + K_p\left(TS\right)T_2 K_w\left(1-TS\right)T_2\right] \qquad \text{Eq. 107-3}$$

Note: Results calculated using these equations represent concentration based on the total sample. To obtain results based on dry PVC content, divide by TS.

13.0 Method Performance

13.1 Range and Sensitivity. The lower limit of detection of vinyl chloride will vary according to the sampling and chromatographic system. The system should be capable of producing a measurement for a 50-ppm vinyl chloride standard that is at least 10 times the standard deviation of the system background noise level.

13.2 An interlaboratory comparison between seven laboratories of three resin samples, each split into three parts, yielded a standard deviation of 2.63 percent for a sample with a mean of 2.09 ppm, 4.16 percent for a sample with a mean of 1.66 ppm, and 5.29 percent for a sample with a mean of 62.66 ppm.

14.0 Pollution Prevention[Reserved]

15.0 Waste Management[Reserved]

16.0 References

1. B.F. Goodrich, Residual Vinyl Chloride Monomer Content of Polyvinyl Chloride Resins, Latex, Wet Cake, Slurry and Water Samples. B.F. Goodrich Chemical Group Standard Test Procedure No. 1005-E. B.F. Goodrich Technical Center, Avon Lake, Ohio. October 8, 1979.

2. Berens, A.R. The Diffusion of Vinyl Chloride in Polyvinyl Chloride. ACS-Division of Polymer Chemistry, Polymer Preprints 15 (2):197. 1974.

3. Berens, A.R. The Diffusion of Vinyl Chloride in Polyvinyl Chloride. ACS-Division of Polymer Chemistry, Polymer Preprints 15 (2):203. 1974.

4. Berens, A.R., *et. al.* Analysis for Vinyl Chloride in PVC Powders by Head-Space Gas Chromatography. Journal of Applied Polymer Science. 19:3169–3172. 1975.

5. Mansfield, R.A. The Evaluation of Henry's Law Constant (Kp) and Water Enhancement in the Perkin-Elmer Multifract F–40 Gas Chromatograph. B.F. Goodrich. Avon Lake, Ohio. February 10, 1978.

17.0 Tables, Diagrams, Flowcharts, and Validation Data[Reserved]

Method 107A—Determination of Vinyl Chloride Content of Solvents, Resin-Solvent Solution, Polyvinyl Chloride Resin, Resin Slurry, Wet Resin, and Latex Samples

Introduction

Performance of this method should not be attempted by persons unfamiliar with the operation of a gas chromatograph (GC) or by those who are unfamiliar with source sampling because knowledge beyond the scope of this presentation is required. Care must be exercised to prevent exposure of sampling personnel to vinyl chloride, a carcinogen.

1. *Applicability and Principle*

1.1 Applicability. This is an alternative method and applies to the measurement of the vinyl chloride content of solvents, resin solvent solutions, polyvinyl chloride (PVC) resin, wet cake slurries, latex, and fabricated resin samples. This method is not acceptable where methods from Section 304(h) of the Clean Water Act, 33 U.S.C. 1251 et seq., (the Federal Water Pollution Control Act Amendments of 1972 as amended by the Clean Water Act of 1977) are required.

1.2 Principle. The basis for this method lies in the direct injection of a liquid sample into a chromatograph and the subsequent evaporation of all volatile material into the carrier gas stream of the chromatograph, thus permitting analysis of all volatile material including vinyl chloride.

2. *Range and Sensitivity*

The lower limit of detection of vinyl chloride in dry PVC resin is 0.2 ppm. For resin solutions, latexes, and wet resin, this limit rises inversely as the nonvolatile (resin) content decreases.

With proper calibration, the upper limit may be extended as needed.

3. *Interferences*

The chromatograph columns and the corresponding operating parameters herein described normally provide an adequate resolution of vinyl chloride. In cases where resolution interferences are encountered, the chromatograph operator shall select the column and operating parameters best suited to his particular analysis problem, subject to the approval of the Administrator. Approval is automatic, provided that the tester produces confirming data through an adequate supplemental analytical technique, such as analysis with a different column or GC/mass spectroscopy, and has the data available for review by the Administrator.

4. *Precision and Reproducibility*

A standard sample of latex containing 181.8 ppm vinyl chloride analyzed 10 times by the alternative method showed a standard deviation of 7.5 percent and a mean error of 0.21 percent.

A sample of vinyl chloride copolymer resin solution was analyzed 10 times by the alternative method and showed a standard deviation of 6.6 percent at a level of 35 ppm.

5. *Safety*

Do not release vinyl chloride to the laboratory atmosphere during preparation of standards. Venting or purging with vinyl chloride monomer (VCM) air mixtures must be held to minimum. When purging is required, the vapor must be routed to outside air. Vinyl chloride, even at low-ppm levels, must never be vented inside the laboratory.

6. *Apparatus*

6.1 Sampling. The following equipment is required:

6.1.1 Glass Bottles. 16-oz wide mouth wide polyethylene-lined, screw-on tops.

6.1.2 Adhesive Tape. To prevent loosening of bottle tops.

6.2 Sample Recovery. The following equipment is required:

6.2.1 Glass Vials. 20-ml capacity with polycone screw caps.

6.2.2 Analytical Balance. Capable of weighing to ±0.01 gram.

6.2.3 Syringe. 50-microliter size, with removable needle.

6.2.4 Fritted Glass Sparger. Fine porosity.

6.2.5 Aluminum Weighing Dishes.

6.2.6 Sample Roller or Shaker. To help dissolve sample.

6.3 Analysis. The following equipment is required:

6.3.1 Gas Chromatograph. Hewlett Packard Model 5720A or equivalent.

6.3.2 Chromatograph Column. Stainless steel, 6.1 m by 3.2 mm, packed with 20 percent Tergitol E–35 on Chromosorb W AW 60/80 mesh. The analyst may use other columns provided that the precision and accuracy of the analysis of vinyl chloride standards are not impaired and that he has available for review information confirming that there is adequate resolution of the vinyl chloride peak. (Adequate resolution is defined as an area overlap of not more than 10 percent of the vinyl chloride peak by an interfering peak. Calculation of area overlap is explained in Apendix C, Procedure 1: “Determination of Adequate Chromatographic Peak Resolution.”)

6.3.3 Valco Instrument Six-Port Rotary Valve. For column back flush.

6.3.4 Septa. For chromatograph injection port.

6.3.5 Injection Port Liners. For chromatograph used.

6.3.6 Regulators. For required gas cylinders.

6.3.7 Soap Film Flowmeter. Hewlett Packard No. 0101-0113 or equivalent.

6.4 Calibration. The following equipment is required:

6.4.1 Analytical Balance. Capable of weighing to ±0.0001 g.

6.4.2 Erlenmeyer Flask With Glass Stopper. 125 ml.

6.4.3 Pipets. 0.1, 0.5, 1, 5, 10, and 50 ml.

6.4.4 Volumetric Flasks. 10 and 100 ml.

7. *Reagents*

Use only reagents that are of chromatograph grade.

7.1 Analysis. The following items are required:

7.1.1 Hydrogen Gas. Zero grade.

7.1.2 Nitrogen Gas. Zero grade.

7.1.3 Air. Zero grade.

7.1.4 Tetrahydrofuran (THF). Reagent grade.

Analyze the THF by injecting 10 microliters into the prepared gas chromatograph. Compare the THF chromatogram with that shown in Figure 107A–1. If the chromatogram is comparable to A, the THF should be sparged with pure nitrogen for approximately 2 hours using the fritted glass sparger to attempt to remove the interfering peak. Reanalyze the sparged THF to determine whether the THF is acceptable for use. If the scan is comparable to B, the THF should be acceptable for use in the analysis.

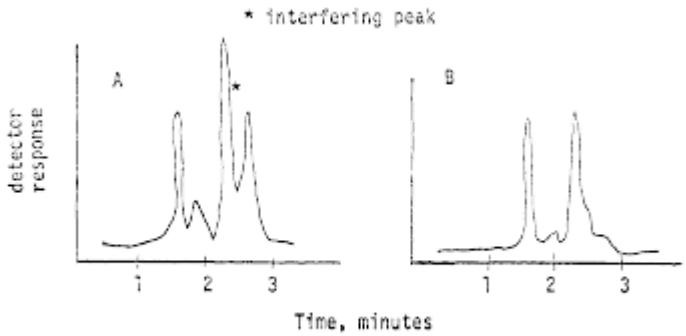

Figure 107A-1

7.1.5 N, N-Dimethylacetamide (DMAC). Spectrographic grade. For use in place of THF.

7.2 Calibration. The following item is required:

7.2.1 Vinyl Chloride 99.9 Percent. Ideal Gas Products lecture bottle, or equivalent. For preparation of standard solutions.

8. *Procedure*

8.1 Sampling. Allow the liquid or dried resin to flow from a tap on the tank, silo, or pipeline until the tap has been purged. Fill a wide-mouth pint bottle, and immediately tightly cap the bottle. Place an identifying label on each bottle and record the date, time, sample location, and material.

8.2 Sample Treatment. Sample must be run within 24 hours.

8.2.1 Resin Samples. Weigh 9.00 ±0.01 g of THF or DMAC in a tared 20-ml vial. Add 1.00 ±0.01 g of resin to the tared vial containing the THF or DMAC. Close the vial tightly with the screw cap, and shake or otherwise agitate the vial until complete solution of the resin is obtained. Shaking may require several minutes to several hours, depending on the nature of the resin.

8.2.2 Suspension Resin Slurry and Wet Resin Sample. Slurry must be filtered using a small Buchner funnel with vacuum to yield a wet resin sample. The filtering process must be continued only as long as a steady stream of water is exiting from the funnel. Excessive filtration time could result in some loss of VCM. The wet resin sample is weighed into a tared 20-ml vial with THF or DMAC as described earlier for resin samples (8.2.1) and treated the same as the resin sample. A sample of the wet resin is used to determine total solids as required for calculating the residual VCM (Section 8.3.4).

8.2.3 Latex and Resin Solvent Solutions. Samples must be thoroughly mixed. Weigh 1.00 ±0.01 g of the latex or resin-solvent solution into a 20-ml vial containing 9.00 ±0.01 g of THF or DMAC as for the resin samples (8.2.1). Cap and shake until complete solution is obtained. Determine the total solids of the latex or resin solution sample (Section 8.3.4).

8.2.4 Solvents and Non-viscous Liquid Samples. No preparation of these samples is required. The neat samples are injected directly into the GC.

8.3 Analysis.

8.3.1 Preparation of GC. Install the chromatographic column, and condition overnight at 70 °C. Do not connect the exit end of the column to the detector while conditioning.

8.3.1.1 Flow Rate Adjustments. Adjust the flow rate as follows:

a. Nitrogen Carrier Gas. Set regulator on cylinder to read 60 psig. Set column flow controller on the chromatograph using the soap film flowmeter to yield a flow rate of 40 cc/min.

b. Burner Air Supply. Set regulator on the cylinder at 40 psig. Set regulator on the chromatograph to supply air to the burner to yield a flow rate of 250 to 300 cc/min using the flowmeter.

c. Hydrogen. Set regulator on cylinder to read 60 psig. Set regulator on the chromatograph to supply 30 to 40 cc/min using the flowmeter. Optimize hydrogen flow to yield the most sensitive detector response without extinguishing the flame. Check flow with flowmeter and record this flow.

d. Nitrogen Back Flush Gas. Set regulator on the chromatograph using the soap film flowmeter to yield a flow rate of 40 cc/min.

8.3.1.2 Temperature Adjustments. Set temperature as follows:

a. Oven (chromatographic column) at 70 °C.

b. Injection Port at 100 °C.

c. Detector at 300 °C.

8.3.1.3 Ignition of Flame Ionization Detector. Ignite the detector according to the manufacturer's instructions. Allow system to stabilize approximately 1 hour.

8.3.1.4 Recorder. Set pen at zero and start chart drive.

8.3.1.5 Attenuation. Set attenuation to yield desired peak height depending on sample VCM content.

8.3.2 Chromatographic Analyses.

a. Sample Injection. Remove needle from 50-microliter syringe. Open sample vial and draw 50-microliters of THF or DMAC sample recovery solution into the syringe. Recap sample vial. Attach needle to the syringe and while holding the syringe vertically (needle uppermost), eject 40 microliters into an absorbent tissue. Wipe needle with tissue. Now inject 10 microliters into chromatograph system. Repeat the injection until two consecutive values for the height of the vinyl chloride peak do not vary more than 5 percent. Use the average value for these two peak heights to compute the sample concentration.

b. Back Flush. After 4 minutes has elapsed after sample injection, actuate the back flush valve to purge the first 4 feet of the chromatographic column of solvent and other high boilers.

c. Sample Data. Record on the chromatograph strip chart the data from the sample label.

d. Elution Time. Vinyl chloride elutes at 2.8 minutes. Acetaldehyde elutes at 3.7 minutes. Analysis is considered complete when chart pen becomes stable. After 5 minutes, reset back flush valve and inject next sample.

8.3.3 Chromatograph Servicing.

a. Septum. Replace after five sample injections.

b. Sample Port Liner. Replace the sample port liner with a clean spare after five sample injections.

c. Chromatograph Shutdown. If the chromatograph has been shut down overnight, rerun one or more samples from the preceding day to test stability and precision prior to starting on the current day's work.

8.3.4 Determination of Total Solids (TS). For wet resin, resin solution, and PVC latex samples, determine the TS for each sample by accurately weighing approximately 3 to 5 grams of sample into a tared aluminum pan. The initial procedure is as follows:

a. Where water is the major volatile component: Tare the weighing dish, and add 3 to 5 grams of sample to the dish. Weigh to the nearest milligram.

b. Where volatile solvent is the major volatile component: Transfer a portion of the sample to a 20-ml screw cap vial and cap immediately. Weigh the vial to the nearest milligram. Uncap the vial and transfer a 3- to 5-gram portion of the sample to a tared aluminum weighing dish. Recap the vial and reweigh to the nearest milligram. The vial weight loss is the sample weight.

To continue, place the weighing pan in a 130 °C oven for 1 hour. Remove the dish and allow to cool to room temperature in a desiccator. Weigh the pan to the nearest 0.1 mg. Total solids is the weight of material in the aluminum pan after heating divided by the net weight of sample added to the pan originally times 100.

9. *Calibration of the Chromatograph*

9.1 Preparation of Standards. Prepare a 1 percent by weight (approximate) solution of vinyl chloride in THF or DMAC by bubbling vinyl chloride gas from a cylinder into a tared 125-ml glass-stoppered flask containing THF or DMAC. The weight of vinyl chloride to be added should be calculated prior to this operation, i.e., 1 percent of the weight of THF or DMAC contained in the tared flask. This must be carried out in a laboratory hood. Adjust the vinyl chloride flow from the cylinder so that the vinyl chloride dissolves essentially completely in the THF or DMAC and is not blown to the atmosphere. Take particular care not to volatize any of the solution. Stopper the flask and swirl the solution to effect complete mixing. Weigh the stoppered flask to nearest 0.1 mg to determine the exact amount of vinyl chloride added.

Pipet 10 ml of the approximately 1 percent solution into a 100-ml glass-stoppered volumetric flask, and add THF or DMAC to fill to the mark. Cap the flask and invert 10 to 20 times. This solution contains approximately 1,000 ppm by weight of vinyl chloride (note the exact concentration).

Pipet 50-, 10-, 5-, 1-, 0.5-, and 0.1-ml aliquots of the approximately 1,000 ppm solution into 10 ml glass stoppered volumetric flasks. Dilute to the mark with THF or DMAC, cap the flasks and invert each 10 to 20 times. These solutions contain approximately 500, 100, 50, 10, 5, and 1 ppm vinyl chloride. Note the exact concentration of each one. These standards are to be kept under refrigeration in stoppered bottles, and must be renewed every 3 months.

9.2 Preparation of Chromatograph Calibration Curve.

Obtain the GC for each of the six final solutions prepared in Section 9.1 by using the procedure in Section 8.3.2. Prepare a chart plotting peak height obtained from the chromatogram of each solution versus the known concentration. Draw a straight line through the points derived by the least squares method.

10. *Calculations*

10.1 Response Factor. From the calibration curve described in Section 9.2, select the value of C_c that corresponds to H_c for each sample. Compute the response factor, R_f, for each sample as follows:

$$R_f = \frac{C_c}{H_c} \qquad \text{Eq. 107A-1}$$

where:

R_f=Chromatograph response factor, ppm/mm.

C_c=Concentration of vinyl chloride in the standard sample, ppm.

H_c=Peak height of the standard sample, mm.

10.2 Residual vinyl chloride monomer concentration (C_{rvc}) or vinyl chloride monomer concentration in resin:

$$C_{rvc} = 10 H_s R_f \qquad \text{Eq. 107A-2}$$

Where:

C_{rvc}=Concentration of residual vinyl chloride monomer, ppm.

H_s=Peak height of sample, mm.

R_f=Chromatograph response factor.

10.3 Samples containing volatile material, i.e., resin solutions, wet resin, and latexes:

$$C_{rvc} = \frac{H_s R_f (1,000)}{TS} \qquad \text{Eq. 107A-3}$$

where:

TS=Total solids in the sample, weight fraction.

10.4 Samples of solvents and in process wastewater:

$$C_{rvc} = \frac{H_s R_f}{0.888} \qquad \text{Eq. 107A-4}$$

Where:

0.888=Specific gravity of THF.

11. *Bibliography*

1. Communication from R. N. Wheeler, Jr.; Union Carbide Corporation. Part 61 National Emissions Standards for Hazardous Air Pollutants appendix B, Method 107—Alternate Method, September 19, 1977.

Method 108—Determination of Particulate and Gaseous Arsenic Emissions

Note: This method does not include all of the specifications (*e.g.,* equipment and supplies) and procedures (*e.g.,* sampling and analytical) essential to its performance. Some material is incorporated by reference from other methods in appendix A to 40 CFR part 60. Therefore, to obtain reliable results, persons using this method should have a thorough knowledge of at least the following additional test methods: Method 1, Method 2, Method 3, Method 5, and Method 12.

1.0 Scope and Application.

1.1 Analytes.

Analyte	CAS No.	Sensitivity
Arsenic compounds as arsenic (As)	7440–38–2	Lower limit 10 µg/ml or less.

1.2 Applicability. This method is applicable for the determination of inorganic As emissions from stationary sources as specified in an applicable subpart of the regulations.

1.3 Data Quality Objectives. Adherence to the requirements of this method will enhance the quality of the data obtained from air pollutant sampling methods.

2.0 Summary of Method

Particulate and gaseous As emissions are withdrawn isokinetically from the source and are collected on a glass mat filter and in water. The collected arsenic is then analyzed by means of atomic absorption spectrophotometry (AAS).

3.0 Definitions.[Reserved]

4.0 Interferences

Analysis for As by flame AAS is sensitive to the chemical composition and to the physical properties (*e.g.,* viscosity, pH) of the sample. The analytical procedure includes a check for matrix effects (Section 11.5).

5.0 Safety

5.1 This method may involve hazardous materials, operations, and equipment. This test method may not address all of the safety problems associated with its use. It is the responsibility of the user to establish appropriate safety and health practices and determine the applicability of regulatory limitations prior to performing this test method.

5.2 Corrosive reagents. The following reagents are hazardous. Personal protective equipment and safe procedures that prevent chemical splashes are recommended. If contact occurs, immediately flush with copious amounts of water for at least 15 minutes. Remove clothing under shower and decontaminate. Treat residual chemical burns as thermal burns.

5.2.1 Hydrochloric Acid (HCl). Highly corrosive liquid with toxic vapors. Vapors are highly irritating to eyes, skin, nose, and lungs, causing severe damage. May cause bronchitis, pneumonia, or edema of lungs. Exposure to concentrations of 0.13 to 0.2 percent can be lethal to humans in a few minutes. Provide ventilation to limit exposure. Reacts with metals, producing hydrogen gas.

5.2.2 Hydrogen Peroxide (H_2O_2). Very harmful to eyes. 30% H_2O_2can burn skin, nose, and lungs.

5.2.3 Nitric Acid (HNO_3). Highly corrosive to eyes, skin, nose, and lungs. Vapors are highly toxic and can cause bronchitis, pneumonia, or edema of lungs. Reaction to inhalation may be delayed as long as 30 hours and still be fatal. Provide ventilation to limit exposure. Strong oxidizer. Hazardous reaction may occur with organic materials such as solvents.

5.2.4 Sodium Hydroxide (NaOH). Causes severe damage to eyes and skin. Inhalation causes irritation to nose, throat, and lungs. Reacts exothermically with small amounts of water.

6.0 Equipment and Supplies

6.1 Sample Collection. A schematic of the sampling train used in performing this method is shown in Figure 108–1; it is similar to the Method 5 sampling train of 40 CFR part 60, appendix A. The following items are required for sample collection:

6.1.1 Probe Nozzle, Probe Liner, Pitot Tube, Differential Pressure Gauge, Filter Holder, Filter Heating System, Temperature Sensor, Metering System, Barometer, and Gas Density Determination Equipment. Same as Method 5, Sections 6.1.1.1 to 6.1.1.7, 6.1.1.9, 6.1.2, and 6.1.3, respectively.

6.1.2 Impingers. Four impingers connected in series with leak-free ground-glass fittings or any similar leak-free noncontaminating fittings. For the first, third, and fourth impingers, use the Greenburg-Smith design, modified by replacing the tip with a 1.3-cm ID (0.5-in.) glass tube extending to about 1.3 cm (0.5 in.) from the bottom of the flask. For the second impinger, use the Greenburg-Smith design with the standard tip. Modifications (*e.g.,* flexible connections between the impingers, materials other than glass, or flexible vacuum lines to connect the filter holder to the condenser) are subject to the approval of the Administrator.

6.1.3 Temperature Sensor. Place a temperature sensor, capable of measuring temperature to within 1 °C (2 °F), at the outlet of the fourth impinger for monitoring purposes.

6.2 Sample Recovery. The following items are required for sample recovery:

6.2.1 Probe-Liner and Probe-Nozzle Brushes, Petri Dishes, Graduated Cylinder and/or Balance, Plastic Storage Containers, and Funnel and Rubber Policeman. Same as Method 5, Sections 6.2.1 and 6.2.4 to 6.2.8, respectively.

6.2.2 Wash Bottles. Polyethylene (2).

6.2.3 Sample Storage Containers. Chemically resistant, polyethylene or polypropylene for glassware washes, 500- or 1000-ml.

6.3 Analysis. The following items are required for analysis:

6.3.1 Spectrophotometer. Equipped with an electrodeless discharge lamp and a background corrector to measure absorbance at 193.7 nanometers (nm). For measuring samples having less than 10 µg As/ml, use a vapor generator accessory or a graphite furnace.

6.3.2 Recorder. To match the output of the spectrophotometer.

6.3.3 Beakers. 150 ml.

6.3.4 Volumetric Flasks. Glass 50-, 100-, 200-, 500-, and 1000-ml; and polypropylene, 50-ml.

6.3.5 Balance. To measure within 0.5 g.

6.3.6 Volumetric Pipets. 1-, 2-, 3-, 5-, 8-, and 10-ml.

6.3.7 Oven.

6.3.8 Hot Plate.

7.0 Reagents and Standards

Unless otherwise indicated, it is intended that all reagents conform to the specifications established by the Committee on Analytical Reagents of the American Chemical Society, where such specifications are available; otherwise, use the best available grade.

7.1 The following reagents are required for sample collection:

7.1.1 Filters. Same as Method 5, Section 7.1.1, except that the filters need not be unreactive to SO_2.

7.1.2 Silica Gel, Crushed Ice, and Stopcock Grease. Same as Method 5, Sections 7.1.2, 7.1.4, and 7.1.5, respectively.

7.1.3 Water. Deionized distilled to meet ASTM D 1193–77 or 91 (incorporated by reference-see §61.18), Type 3. When high concentrations of organic matter are not expected to be present, the $KMnO_4$test for oxidizable organic matter may be omitted.

7.2 Sample Recovery.

7.2.1 0.1 N NaOH. Dissolve 4.00 g of NaOH in about 500 ml of water in a 1-liter volumetric flask. Then, dilute to exactly 1.0 liter with water.

7.3 Analysis. The following reagents and standards are required for analysis:

7.3.1 Water. Same as Section 7.1.3.

7.3.2 Sodium Hydroxide, 0.1 N. Same as in Section 7.2.1.

7.3.3 Sodium Borohydride ($NaBH_4$), 5 Percent Weight by Volume (W/V). Dissolve 50.0 g of $NaBH_4$in about 500 ml of 0.1 N NaOH in a 1-liter volumetric flask. Then, dilute to exactly 1.0 liter with 0.1 N NaOH.

7.3.4 Hydrochloric Acid, Concentrated.

7.3.5 Potassium Iodide (KI), 30 Percent (W/V). Dissolve 300 g of KI in 500 ml of water in a 1 liter volumetric flask. Then, dilute to exactly 1.0 liter with water.

7.3.6 Nitric Acid, Concentrated.

7.3.7 Nitric Acid, 0.8 N. Dilute 52 ml of concentrated $HNO_3$to exactly 1.0 liter with water.

7.3.8 Nitric Acid, 50 Percent by Volume (V/V). Add 50 ml concentrated $HNO_3$to 50 ml water.

7.3.9 Stock Arsenic Standard, 1 mg As/ml. Dissolve 1.3203 g of primary standard grade As_2O_3in 20 ml of 0.1 N NaOH in a 150 ml beaker. Slowly add 30 ml of concentrated HNO_3. Heat the resulting solution and evaporate just to dryness. Transfer the residue quantitatively to a 1-liter volumetric flask, and dilute to 1.0 liter with water.

7.3.10 Arsenic Working Solution, 1.0 µg As/ml. Pipet exactly 1.0 ml of stock arsenic standard into an acid-cleaned, appropriately labeled 1-liter volumetric flask containing about 500 ml of water and 5 ml of concentrated HNO_3. Dilute to exactly 1.0 liter with water.

7.3.11 Air. Suitable quality for AAS analysis.

7.3.12 Acetylene. Suitable quality for AAS analysis.

7.3.13 Nickel Nitrate, 5 Percent Ni (W/V). Dissolve 24.780 g of nickel nitrate hexahydrate [$Ni(NO_3)_2 6H_2O$] in water in a 100-ml volumetric flask, and dilute to 100 ml with water.

7.3.14 Nickel Nitrate, 1 Percent Ni (W/V). Pipet 20 ml of 5 percent nickel nitrate solution into a 100-ml volumetric flask, and dilute to exactly 100 ml with water.

7.3.15 Hydrogen Peroxide, 3 Percent by Volume. Pipet 50 ml of 30 percent H_2O_2into a 500-ml volumetric flask, and dilute to exactly 500 ml with water.

8.0 Sample Collection, Preservation, Transport, and Storage

8.1 Pretest Preparation. Follow the general procedure given in Method 5, Section 8.1, except the filter need not be weighed, and the 200 ml of 0.1N NaOH and Container 4 should be tared to within 0.5 g.

8.2 Preliminary Determinations. Follow the general procedure given in Method 5, Section 8.2, except select the nozzle size to maintain isokinetic sampling rates below 28 liters/min (1.0 cfm).

8.3 Preparation of Sampling Train. Follow the general procedure given in Method 5, Section 8.3.

8.4 Leak-Check Procedures. Same as Method 5, Section 8.4.

8.5 Sampling Train Operation. Follow the general procedure given in Method 5, Section 8.5, except maintain isokinetic sampling flow rates below 28 liters/min (1.0 cfm). For each run, record the data required on a data sheet similar to the one shown in Figure 108–2.

8.6 Calculation of Percent Isokinetic. Same as Method 5, Section 8.6.

8.7 Sample Recovery. Same as Method 5, Section 8.7, except that 0.1 N NaOH is used as the cleanup solvent instead of acetone and that the impinger water is treated as follows:

8.7.1 Container Number 4 (Impinger Water). Clean each of the first three impingers and connecting glassware in the following manner:

8.7.1.1 Wipe the impinger ball joints free of silicone grease, and cap the joints.

8.7.1.2 Rotate and agitate each of the first two impingers, using the impinger contents as a rinse solution.

8.7.1.3 Transfer the liquid from the first three impingers to Container Number 4. Remove the outlet ball-joint cap, and drain the contents through this opening. Do not separate the impinger parts (inner and outer tubes) while transferring their contents to the container.

8.7.1.4 Weigh the contents of Container No. 4 to within 0.5 g. Record in the log the weight of liquid along with a notation of any color or film observed in the impinger catch. The weight of liquid is needed along with the silica gel data to calculate the stack gas moisture content.

Note: Measure and record the total amount of 0.1 N NaOH used for rinsing under Sections 8.7.1.5 and 8.7.1.6.

8.7.1.5 Pour approximately 30 ml of 0.1 NaOH into each of the first two impingers, and agitate the impingers. Drain the 0.1 N NaOH through the outlet arm of each impinger into Container Number 4. Repeat this operation a second time; inspect the impingers for any abnormal conditions.

8.7.1.6 Wipe the ball joints of the glassware connecting the impingers and the back half of the filter holder free of silicone grease, and rinse each piece of glassware twice with 0.1 N NaOH; transfer this rinse into Container Number 4. (DO NOT RINSE or brush the glass-fritted filter support.) Mark the height of the fluid level to determine whether leakage occurs during transport. Label the container to identify clearly its contents.

8.8 Blanks.

8.8.1 Sodium Hydroxide. Save a portion of the 0.1 N NaOH used for cleanup as a blank. Take 200 ml of this solution directly from the wash bottle being used and place it in a plastic sample container labeled “NaOH blank.”

8.8.2 Water. Save a sample of the water, and place it in a container labeled “H_2O blank.”

8.8.3 Filter. Save two filters from each lot of filters used in sampling. Place these filters in a container labeled “filter blank.”

9.0 Quality Control

9.1 Miscellaneous Quality Control Measures.

Section	Quality control measure	Effect
8.4, 10.1	Sampling equipment leak-checks and calibration	Ensures accuracy and precision of sampling measurements.
10.4	Spectrophotometer calibration	Ensures linearity of spectrophotometer response to standards.
11.5	Check for matrix effects	Eliminates matrix effects.

9.2 Volume Metering System Checks. Same as Method 5, Section 9.2.

10.0 Calibration and Standardization

Note: Maintain a laboratory log of all calibrations.

10.1 Sampling Equipment. Same as Method 5, Section 10.0.

10.2 Preparation of Standard Solutions.

10.2.1 For the high level procedure, pipet 1, 3, 5, 8, and 10 ml of the 1.0 mg As/ml stock solution into separate 100 ml volumetric flasks, each containing 5 ml of concentrated HNO_3. Dilute to the mark with water.

10.2.2 For the low level vapor generator procedure, pipet 1, 2, 3, and 5 ml of 1.0 µg As/ml standard solution into separate reaction tubes. Dilute to the mark with water.

10.2.3 For the low level graphite furnace procedure, pipet 1, 5, 10 and 15 ml of 1.0 µg As/ml standard solution into separate flasks along with 2 ml of the 5 percent nickel nitrate solution and 10 ml of the 3 percent H_2O_2solution. Dilute to the mark with water.

10.3 Calibration Curve. Analyze a 0.8 N HNO_3blank and each standard solution according to the procedures outlined in section 11.4.1. Repeat this procedure on each standard solution until two consecutive peaks agree within 3 percent of their average value. Subtract the average peak height (or peak area) of the blank—which must be less than 2 percent of recorder full scale—from the averaged peak height of each standard solution. If the blank absorbance is greater than 2 percent of full-scale, the probable cause is As contamination of a reagent or carry-over of As from a previous sample. Prepare the calibration curve by plotting the corrected peak height of each standard solution versus the corresponding final total As weight in the solution.

10.4 Spectrophotometer Calibration Quality Control. Calculate the least squares slope of the calibration curve. The line must pass through the origin or through a point no further from the origin than ±2 percent of the recorder full scale. Multiply the corrected peak height by the reciprocal of the least squares slope to determine the distance each calibration point lies from the theoretical calibration line. The difference between the calculated concentration values and the actual concentrations (*e.g.,* 1, 3, 5, 8, and 10 mg As for the high-level procedure) must be less than 7 percent for all standards.

Note: For instruments equipped with direct concentration readout devices, preparation of a standard curve will not be necessary. In all cases, follow calibration and operational procedures in the manufacturers' instruction manual.

11.0 Analytical Procedure

11.1 Sample Loss Check. Prior to analysis, check the liquid level in Containers Number 2 and Number 4. Note on the analytical data sheet whether leakage occurred during transport. If a noticeable amount of leakage occurred, either void the sample or take steps, subject to the approval of the Administrator, to adjust the final results.

11.2 Sample Preparation.

11.2.1 Container Number 1 (Filter). Place the filter and loose particulate matter in a 150 ml beaker. Also, add the filtered solid material from Container Number 2 (see Section 11.2.2). Add 50 ml of 0.1 N NaOH. Then stir and warm on a hot plate at low heat (do not boil) for about 15 minutes. Add 10 ml of concentrated HNO_3, bring to a boil, then simmer for about 15 minutes. Filter the solution through a glass fiber filter. Wash with hot water, and catch the filtrate in a clean 150 ml beaker. Boil the filtrate, and evaporate to dryness. Cool, add 5 ml of 50 percent HNO_3, and then warm and stir. Allow to cool. Transfer to a 50-ml volumetric flask, dilute to volume with water, and mix well.

11.2.2 Container Number 2 (Probe Wash).

11.2.2.1 Filter (using a glass fiber filter) the contents of Container Number 2 into a 200 ml volumetric flask. Combine the filtered (solid) material with the contents of Container Number 1 (Filter).

11.2.2.2 Dilute the filtrate to exactly 200 ml with water. Then pipet 50 ml into a 150 ml beaker. Add 10 ml of concentrated HNO_3, bring to a boil, and evaporate to dryness. Allow to cool, add 5 ml of 50 percent HNO_3, and then warm and stir. Allow the solution to cool, transfer to a 50-ml volumetric flask, dilute to volume with water, and mix well.

11.2.3 Container Number 4 (Impinger Solution). Transfer the contents of Container Number 4 to a 500 ml volumetric flask, and dilute to exactly 500-ml with water. Pipet 50 ml of the solution into a 150-ml beaker. Add 10 ml of concentrated HNO_3, bring to a boil, and evaporate to dryness. Allow to cool, add 5 ml of 50 percent HNO_3, and then warm and stir. Allow the solution to cool, transfer to a 50-ml volumetric flask, dilute to volume with water, and mix well.

11.2.4 Filter Blank. Cut each filter into strips, and treat each filter individually as directed in Section 11.2.1, beginning with the sentence, “Add 50 ml of 0.1 N NaOH.”

11.2.5 Sodium Hydroxide and Water Blanks. Treat separately 50 ml of 0.1 N NaOH and 50 ml water, as directed under Section 11.2.3, beginning with the sentence, “Pipet 50 ml of the solution into a 150-ml beaker.”

11.3 Spectrophotometer Preparation. Turn on the power; set the wavelength, slit width, and lamp current. Adjust the background corrector as instructed by the manufacturer's manual for the particular atomic absorption spectrophotometer. Adjust the burner and flame characteristics as necessary.

11.4 Analysis. Calibrate the analytical equipment and develop a calibration curve as outlined in Sections 10.2 through 10.4.

11.4.1 Arsenic Samples. Analyze an appropriately sized aliquot of each diluted sample (from Sections 11.2.1 through 11.2.3) until two consecutive peak heights agree within 3 percent of their average value. If applicable, follow the procedures outlined in Section 11.4.1.1. If the sample concentration falls outside the range of the calibration curve, make an appropriate dilution with 0.8 N HNO_3so that the final concentration falls within the range of the curve. Using the calibration curve, determine the arsenic concentration in each sample fraction.

Note: Because instruments vary between manufacturers, no detailed operating instructions will be given here. Instead, the instrument manufacturer's detailed operating instructions should be followed.

11.4.1.1 Arsenic Determination at Low Concentration. The lower limit of flame AAS is 10 µg As/ml. If the arsenic concentration of any sample is at a lower level, use the graphite furnace or vapor generator which is available as an accessory component. Flame, graphite furnace, or vapor generators may be used for samples whose concentrations are between 10 and 30 µg/ml. Follow the manufacturer's instructions in the use of such equipment.

11.4.1.1.1 Vapor Generator Procedure. Place a sample containing between 0 and 5 µg of arsenic in the reaction tube, and dilute to 15 ml with water. Since there is some trial and error involved in this procedure, it may be necessary to screen the samples by conventional atomic absorption until an approximate concentration is determined. After determining the approximate concentration, adjust the volume of the sample accordingly. Pipet 15 ml of concentrated HCl into each tube. Add 1 ml of 30 percent KI solution. Place the reaction tube into a 50 °C (120 °F) water bath for 5 minutes. Cool to room temperature. Connect the reaction tube to the vapor generator assembly. When the instrument response has returned to baseline, inject 5.0 ml of 5 percent $NaBH_4$, and integrate the resulting spectrophotometer signal over a 30-second time period.

11.4.1.1.2 Graphite Furnace Procedure. Dilute the digested sample so that a 5 ml aliquot contains less than 1.5 µg of arsenic. Pipet 5 ml of this digested solution into a 10-ml volumetric flask. Add 1 ml of the 1 percent nickel nitrate solution, 0.5 ml of 50 percent HNO_3, and 1 ml of the 3 percent hydrogen peroxide and dilute to 10 ml with water. The sample is now ready for analysis.

11.4.1.2 Run a blank (0.8 N HNO_3) and standard at least after every five samples to check the spectrophotometer calibration. The peak height of the blank must pass through a point no further from the origin than ±2 percent of the recorder full scale. The difference between the measured concentration of the standard (the product of the corrected average peak height and the reciprocal of the least squares slope) and the actual concentration of the standard must be less than 7 percent, or recalibration of the analyzer is required.

11.4.1.3 Determine the arsenic concentration in the filter blank (i.e., the average of the two blank values from each lot).

11.4.2 Container Number 3 (Silica Gel). This step may be conducted in the field. Weigh the spent silica gel (or silica gel plus impinger) to the nearest 0.5 g; record this weight.

11.5 Check for matrix effects on the arsenic results. Same as Method 12, Section 11.5.

12.0 Data Analysis and Calculations

12.1 Nomenclature

B_{ws}= Water in the gas stream, proportion by volume.

C_a= Concentration of arsenic as read from the standard curve, µg/ml.

C_s= Arsenic concentration in stack gas, dry basis, converted to standard conditions, g/dsm^3 (gr/dscf).

E_a= Arsenic mass emission rate, g/hr (lb/hr).

F_d= Dilution factor (equals 1 if the sample has not been diluted).

I = Percent of isokinetic sampling.

m_{bi}= Total mass of all four impingers and contents before sampling, g.

m_{fi}= Total mass of all four impingers and contents after sampling, g.

m_n= Total mass of arsenic collected in a specific part of the sampling train, µg.

m_t= Total mass of arsenic collected in the sampling train, µg.

T_m= Absolute average dry gas meter temperature (*see* Figure 108–2), °K (°R).

V_m= Volume of gas sample as measured by the dry gas meter, dry basis, m^3 (ft^3).

Vm(std)= Volume of gas sample as measured by the dry gas meter, corrected to standard conditions, m^3 (ft^3).

V_n= Volume of solution in which the arsenic is contained, ml.

Vw(std)= Volume of water vapor collected in the sampling train, corrected to standard conditions, m^3 (ft^3).

ΔH = Average pressure differential across the orifice meter (*see* Figure 108–2), mm H_2O (in. H_2O).

12.2 Average Dry Gas Meter Temperatures (T_m) and Average Orifice Pressure Drop (ΔH). See data sheet (Figure 108–2).

12.3 Dry Gas Volume. Using data from this test, calculate Vm(std)according to the procedures outlined in Method 5, Section 12.3.

12.4 Volume of Water Vapor.

$$V_{w(std)} = K_2\left(m_{fi} - m_{bi}\right) \qquad \text{Eq. 108-1}$$

Where:

K_2= 0.001334 m^3 /g for metric units.

= 0.047012 ft^3 /g for English units.

12.5 Moisture Content.

$$B_{ws} = \frac{V_{w(std)}}{V_{m(std)} + V_{w(std)}} \qquad \text{Eq. 108-2}$$

12.6 Amount of Arsenic Collected.

12.6.1 Calculate the amount of arsenic collected in each part of the sampling train, as follows:

$$m_n = C_a F_d V_n \qquad \text{Eq. 108-3}$$

12.6.2 Calculate the total amount of arsenic collected in the sampling train as follows:

$$m_t = m_{(\text{filters})} + m_{(\text{probe})} + m_{(\text{impingers})} - m_{(\text{filter blank})} - m_{(\text{NaOH blank})} - m_{(\text{water blank})} \qquad \text{Eq. 108-4}$$

12.7 Calculate the arsenic concentration in the stack gas (dry basis, adjusted to standard conditions) as follows:

$$C_s = K_3\left(m_t / V_{m(std)}\right) \qquad \text{Eq. 108-5}$$

Where:

K_3= 10^{-6}g/μg for metric units

= 1.54×10^{-5}gr/µg for English units

12.8 Stack Gas Velocity and Volumetric Flow Rate. Calculate the average stack gas velocity and volumetric flow rate using data obtained in this method and the equations in Sections 12.2 and 12.3 of Method 2.

12.9 Pollutant Mass Rate. Calculate the arsenic mass emission rate as follows:

$$E_a = C_s Q_{sd} \qquad \text{Eq. 108-6}$$

12.10 Isokinetic Variation. Same as Method 5, Section 12.11.

13.0 Method Performance

13.1 Sensitivity. The lower limit of flame AAS 10 µg As/ml. The analytical procedure includes provisions for the use of a graphite furnace or vapor generator for samples with a lower arsenic concentration.

14.0 Pollution Prevention.[Reserved]

15.0 Waste Management.[Reserved]

16.0 References.

Same as References 1 through 9 of Method 5, Section 17.0, with the addition of the following:

1. Perkin Elmer Corporation. Analytical Methods for Atomic Absorption Spectrophotometry. 303–0152. Norwalk, Connecticut. September 1976. pp. 5–6.

2. Standard Specification for Reagent Water. In: Annual Book of American Society for Testing and Materials Standards. Part 31: Water, Atmospheric Analysis. American Society for Testing and Materials. Philadelphia, PA. 1974. pp. 40–42.

3. Stack Sampling Safety Manual (Draft). U.S. Environmental Protection Agency, Office of Air Quality Planning and Standard, Research Triangle Park, NC. September 1978.

17.0 Tables, Diagrams, Flowcharts, and Validation Data

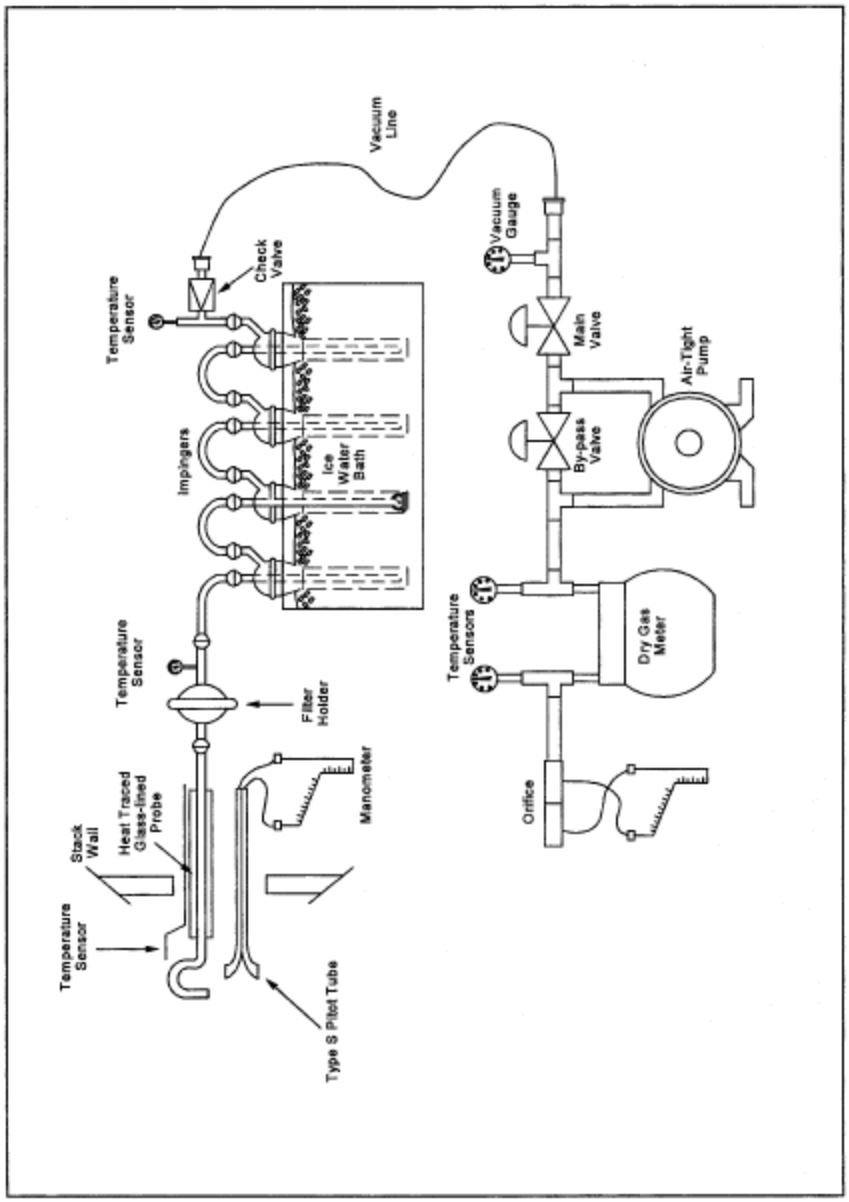

Figure 108-1. Arsenic Sampling Train

View or download PDF

Plant _____
Location _____
Operator _____
Date _____
Run No. _____
Sample box No. _____
Meter box No. _____
Meter $\Delta H@$ _____
C factor _____
Pitot tube coefficient, C_p _____

SCHEMATIC OF STACK CROSS SECTION

Ambient temperature _____
Barometric pressure _____
Assumed moisture, % _____
Probe length, (ft.) _____
Nozzle identification No. _____
Average calibrated nozzle diameter, (in.) _____
Probe heater setting _____
Leak rate, (cfm) _____
Probe liner material _____

Traverse point number	Sampling time	Vacuum	Stack temperature	Velocity head	Pressure differential across orifice meter	Gas meter reading	Gas sample temperature at dry gas meter		Filter temperature	Temperature of gas leaving condenser or last impinger
							Inlet	Outlet		
	min.	(in.Hg)	(T_s) (°F)	(ΔP_s) (in. H_2O)	(in. H_2O)	(ft^3)	(°F)	(°F)	(°F)	(°F)
Total							Avg.	Avg.		
Average							Avg.			

Figure 108-2. Arsenic Field Data Sheet.

View or download PDF

Method 108A—Determination of Arsenic Content in Ore Samples From Nonferrous Smelters

Note: This method does not include all of the specifications (*e.g.,* equipment and supplies) and procedures (*e.g.,* sampling and analytical) essential to its performance. Some material is incorporated by reference from other methods in appendix A to 40 CFR part 60. Therefore, to obtain reliable results, persons using this method should have a thorough knowledge of Method 12.

1.0 Scope and Application

1.1 Analytes.

Analyte	CAS No.	Sensitivity
Arsenic compounds as arsenic (As)	7440–38–2	Lower limit 10 µg/ml or less.

1.2 Applicability. This method applies to the determination of inorganic As content of process ore and reverberatory matte samples from nonferrous smelters and other sources as specified in an applicable subpart of the regulations.

1.3 Data Quality Objectives. Adherence to the requirements of this method will enhance the quality of the data obtained from air pollutant sampling methods.

2.0 Summary of Method

Arsenic bound in ore samples is liberated by acid digestion and analyzed by flame atomic absorption spectrophotometry (AAS).

3.0 Definitions[Reserved]

4.0 Interferences

Analysis for As by flame AAS is sensitive to the chemical composition and to the physical properties (*e.g.,* viscosity, pH) of the sample. The analytical procedure includes a check for matrix effects (section 11.5).

5.0 Safety

5.1 Disclaimer. This method may involve hazardous materials, operations, and equipment. This test method may not address all of the safety problems associated with its use. It is the responsibility of the user to establish appropriate safety and health practices and determine the applicability of regulatory limitations prior to performing this test method.

5.2 Corrosive Reagents. The following reagents are hazardous. Personal protective equipment and safe procedures that prevent chemical splashes are recommended. If contact occurs, immediately flush with copious amounts of water for at least 15 minutes. Remove clothing under shower and decontaminate. Treat residual chemical burns as thermal burns.

5.2.1 Hydrochloric Acid (HCl). Highly corrosive liquid with toxic vapors. Vapors are highly irritating to eyes, skin, nose, and lungs, causing severe damage. May cause bronchitis, pneumonia, or edema of lungs. Exposure to concentrations of 0.13 to 0.2 percent can be lethal to humans in a few minutes. Provide ventilation to limit exposure. Reacts with metals, producing hydrogen gas.

5.2.2 Hydrofluoric Acid (HF). Highly corrosive to eyes, skin, nose, throat, and lungs. Reaction to exposure may be delayed by 24 hours or more. Provide ventilation to limit exposure.

5.2.3 Hydrogen Peroxide (H_2O_2). Very harmful to eyes. 30% H_2O_2can burn skin, nose, and lungs.

5.2.4 Nitric Acid (HNO_3). Highly corrosive to eyes, skin, nose, and lungs. Vapors are highly toxic and can cause bronchitis, pneumonia, or edema of lungs. Reaction to inhalation may be delayed as long as 30 hours and still be fatal. Provide ventilation to limit exposure. Strong oxidizer. Hazardous reaction may occur with organic materials such as solvents.

5.2.5 Sodium Hydroxide (NaOH). Causes severe damage to eyes and skin. Inhalation causes irritation to nose, throat, and lungs. Reacts exothermically with limited amounts of water.

6.0 Equipment and Supplies

6.1 Sample Collection and Preparation. The following items are required for sample collection and preparation:

6.1.1 Parr Acid Digestion Bomb. Stainless steel with vapor-tight Teflon cup and cover.

6.1.2 Volumetric Pipets. 2- and 5-ml sizes.

6.1.3 Volumetric Flask. 50-ml polypropylene with screw caps, (one needed per standard).

6.1.4 Funnel. Polyethylene or polypropylene.

6.1.5 Oven. Capable of maintaining a temperature of approximately 105 °C (221 °F).

6.1.6 Analytical Balance. To measure to within 0.1 mg.

6.2 Analysis. The following items are required for analysis:

6.2.1 Spectrophotometer and Recorder. Equipped with an electrodeless discharge lamp and a background corrector to measure absorbance at 193.7 nm. For measuring samples having less than 10 µg As/ml, use a graphite furnace or vapor generator accessory. The recorder shall match the output of the spectrophotometer.

6.2.2 Volumetric Flasks. Class A, 50-ml (one needed per sample and blank), 500-ml, and 1-liter.

6.2.3 Volumetric Pipets. Class A, 1-, 5-, 10-, and 25-ml sizes.

7.0 Reagents and Standards.

Unless otherwise indicated, it is intended that all reagents conform to the specifications established by the Committee on Analytical Reagents of the American Chemical Society, where such specifications are available; otherwise, use the best available grade.

7.1 Sample Collection and Preparation. The following reagents are required for sample collection and preparation:

7.1.1 Water. Deionized distilled to meet ASTM D 1193–77 or 91 Type 3 (incorporated by reference—See §61.18). When high concentrations of organic matter are not expected to be present, the $KMnO_4$test for oxidizable organic matter may be omitted. Use in all dilutions requiring water.

7.1.2 Nitric Acid Concentrated.

7.1.3 Nitric Acid, 0.5 N. In a 1-liter volumetric flask containing water, add 32 ml of concentrated $HNO_3$and dilute to volume with water.

7.1.4 Hydrofluoric Acid, Concentrated.

7.1.5 Potassium Chloride (KCl) Solution, 10 percent weight by volume (W/V). Dissolve 10 g KCl in water, add 3 ml concentrated HNO_3, and dilute to 100 ml.

7.1.6 Filter. Teflon filters, 3-micron porosity, 47-mm size. (Available from Millipore Co., type FS, Catalog Number FSLW04700.)

7.1.7 Sodium Borohydride ($NaBH_4$), 5 Percent (W/V). Dissolve 50.0 g of $NaBH_4$in about 500 ml of 0.1 N NaOH in a 1-liter volumetric flask. Then, dilute to exactly 1.0 liter with 0.1 N NaOH.

7.1.8 Nickel Nitrate, 5 Percent Ni (W/V). Dissolve 24.780 g of nickel nitrate hexahydrate [$Ni(NO_3)_2 6H_2O$] in water in a 100-ml volumetric flask, and dilute to 100 ml with water.

7.1.9 Nickel Nitrate, 1 Percent Ni (W/V). Pipet 20 ml of 5 percent nickel nitrate solution into a 100-ml volumetric flask, and dilute to 100 ml with water.

7.2 Analysis. The following reagents and standards are required for analysis:

7.2.2 Sodium Hydroxide, 0.1 N. Dissolve 2.00 g of NaOH in water in a 500-ml volumetric flask. Dilute to volume with water.

7.2.3 Nitric Acid, 0.5 N. Same as in Section 7.1.3.

7.2.4 Potassium Chloride Solution, 10 percent. Same as in Section 7.1.5.

7.2.5 Hydrochloric Acid, Concentrated.

7.2.6 Potassium Iodide (KI), 30 Percent (W/V). Dissolve 300 g of KI in about 500 ml of water in a 1-liter volumetric flask. Then, dilute to exactly 1.0 liter with water.

7.2.7 Hydrogen Peroxide, 3 Percent by Volume. Pipet 50 ml of 30 percent H_2O_2into a 500-ml volumetric flask, and dilute to exactly 500 ml with water.

7.2.8 Stock Arsenic Standard, 1 mg As/ml. Dissolve 1.3203 g of primary grade As_2O_3in 20 ml of 0.1 N NaOH. Slowly add 30 ml of concentrated HNO_3, and heat in an oven at 105 °C (221 °F) for 2 hours. Allow to cool, and dilute to 1 liter with deionized distilled water.

7.2.9 Nitrous Oxide. Suitable quality for AAS analysis.

7.2.10 Acetylene. Suitable quality for AAS analysis.

7.2.11 Quality Assurance Audit Samples. When making compliance determinations, and upon availability, audit samples may be obtained from the appropriate EPA regional Office or from the responsible enforcement authority.

Note: The responsible enforcement authority should be notified at least 30 days prior to the test date to allow sufficient time for sample delivery.

8.0 Sample Collection, Preservation, Transport, and Storage

8.1 Sample Collection. A sample that is representative of the ore lot to be tested must be taken prior to analysis. (A portion of the samples routinely collected for metals analysis may be used provided the sample is representative of the ore being tested.)

8.2 Sample Preparation. The sample must be ground into a finely pulverized state.

9.0 Quality Control

Section	Quality control measure	Effect
10.2	Spectrophotometer calibration	Ensure linearity of spectrophotometer response to standards.
11.5	Check for matrix effects	Eliminate matrix effects.

10.0 Calibration and Standardizations

Note: Maintain a laboratory log of all calibrations.

10.1 Preparation of Standard Solutions. Pipet 1, 5, 10, and 25 ml of the stock As solution into separate 100-ml volumetric flasks. Add 10 ml KCl solution and dilute to the mark with 0.5 N HNO_3. This will give standard concentrations of 10, 50, 100, and 250 µg As/ml. For low-level arsenic samples that require the use of a graphite furnace or vapor generator, follow the procedures in Section 11.3:1. Dilute 10 ml of KCl solution to 100 ml with 0.5 N $HNO_3$and use as a reagent blank.

10.2 Calibration Curve. Analyze the reagent blank and each standard solution according to the procedures outlined in Section 11.3. Repeat this procedure on each standard solution until two consecutive peaks agree within 3 percent of their average value. Subtract the average peak height (or peak area) of the blank—which must be less than 2 percent of recorder full scale—from the averaged peak heights of each standard solution. If the blank absorbance is greater than 2 percent of full-scale, the probable cause is Hg contamination of a reagent or carry-over of As from a previous sample. Prepare the calibration curve by plotting the corrected peak height of each standard solution versus the corresponding final total As weight in the solution.

10.3 Spectrophotometer Calibration Quality Control. Calculate the least squares slope of the calibration curve. The line must pass through the origin or through a point no further from the origin than ±2 percent of the recorder full scale. Multiply the corrected peak height by the reciprocal of the least squares slope to determine the distance each calibration point lies from the theoretical calibration line. The difference between the calculated concentration values and the actual concentrations must be less than 7 percent for all standards.

Note: For instruments equipped with direct concentration readout devices, preparation of a standard curve will not be necessary. In all cases, follow calibration and operational procedures in the manufacturer's instruction manual.

11.0 Analytical Procedure

11.1 Sample Preparation. Weigh 50 to 500 mg of finely pulverized sample to the nearest 0.1 mg. Transfer the sample into the Teflon cup of the digestion bomb, and add 2 ml each of concentrated $HNO_3$and HF. Seal the bomb immediately to prevent the loss of any volatile arsenic compounds that may form. Heat in an oven at 105 °C (221 °F) for 2 hours. Remove the bomb from the oven and allow to cool. Using a Teflon filter, quantitatively filter the digested sample into a 50-ml polypropylene volumetric flask. Rinse the bomb three times with small portions of 0.5 N HNO_3, and filter the rinses into the flask. Add 5 ml of KCl solution to the flask, and dilute to 50 ml with 0.5 N HNO_3.

11.2 Spectrophotometer Preparation.

11.2.1 Turn on the power; set the wavelength, slit width, and lamp current. Adjust the background corrector as instructed by the manufacturer's manual for the particular atomic absorption spectrophotometer. Adjust the burner and flame characteristics as necessary.

11.2.2 Develop a spectrophotometer calibration curve as outlined in Sections 10.2 and 10.3.

11.3 Arsenic Determination. Analyze an appropriately sized aliquot of each diluted sample (from Section 11.1) until two consecutive peak heights agree within 3 percent of their average value. If applicable, follow the procedures outlined in Section 11.3.1. If the sample concentration falls outside the range of the calibration curve, make an appropriate dilution with 0.5 N HNO_3so that the final concentration falls within the range of the curve. Using the calibration curve, determine the As concentration in each sample.

Note: Because instruments vary between manufacturers, no detailed operating instructions will be given here. Instead, the instrument manufacturer's detailed operating instructions should be followed.

11.3.1 Arsenic Determination at Low Concentration. The lower limit of flame AAS is 10 µg As/ml. If the arsenic concentration of any sample is at a lower level, use the vapor generator or graphite furnace which is available as an accessory component. Flame, graphite furnace, or vapor generators may be used for samples whose concentrations are between 10 and 30 µg/ml. Follow the manufacturer's instructions in the use of such equipment.

11.3.1.1 Vapor Generator Procedure. Place a sample containing between 0 and 5 µg of arsenic in the reaction tube, and dilute to 15 ml with water. Since there is some trial and error involved in this procedure, it may be necessary to

screen the samples by conventional AAS until an approximate concentration is determined. After determining the approximate concentration, adjust the volume of the sample accordingly. Pipet 15 ml of concentrated HCl into each tube. Add 1 ml of 30 percent KI solution. Place the reaction tube into a 50 °C (120 °F) water bath for 5 minutes. Cool to room temperature. Connect the reaction tube to the vapor generator assembly. When the instrument response has returned to baseline, inject 5.0 ml of 5 percent $NaBH_4$and integrate the resulting spectrophotometer signal over a 30-second time period.

11.3.1.2 Graphite Furnace Procedure. Pipet 5 ml of the digested solution into a 10-ml volumetric flask. Add 1 ml of the 1 percent nickel nitrate solution, 0.5 ml of 50 percent HNO_3, and 1 ml of the 3 percent H_2O_2, and dilute to 10 ml with water. The sample is now ready to inject in the furnace for analysis.

11.4 Run a blank and standard at least after every five samples to check the spectrophotometer calibration. The peak height of the blank must pass through a point no further from the origin than ±2 percent of the recorder full scale. The difference between the measured concentration of the standard (the product of the corrected average peak height and the reciprocal of the least squares slope) and the actual concentration of the standard must be less than 7 percent, or recalibration of the analyzer is required.

11.5 Mandatory Check for Matrix Effects on the Arsenic Results. Same as Method 12, Section 11.5.

12.0 Data Analysis and Calculations

12.1 Calculate the percent arsenic in the ore sample as follows:

$$\% As = \frac{5 C_a F_d}{W} \qquad \text{Eq. 108A-1}$$

Where:

C_a= Concentration of As as read from the standard curve, µg/ml.

F_d= Dilution factor (equals to 1 if the sample has not been diluted).

W = Weight of ore sample analyzed, mg.

5 = (50 ml sample “ 100)/(10^3 µg/mg).

13.0 Method Performance

13.1 Sensitivity. The lower limit of flame AAS is 10 µg As/ml. The analytical procedure includes provisions for the use of a graphite furnace or vapor generator for samples with a lower arsenic concentration.

14.0 Pollution Prevention.[Reserved]

15.0 Waste Management.[Reserved]

16.0 References

Same as References 1 through 9 of Section 17.0 of Method 5, with the addition of the following:

1. Perkin Elmer Corporation. Analytical Methods of Atomic Absorption Spectrophotometry. 303–0152. Norwalk, Connecticut. September 1976. pp 5–6.

2. Ringwald, D. Arsenic Determination on Process Materials from ASARCO's Copper Smelter in Tacoma, Washington. Unpublished Report. Prepared for Emission Measurement Branch, Emission Standards and Engineering Division, U.S. Environmental Protection Agency, Research Triangle Park, North Carolina. August 1980. 35 pp.

3. Stack Sampling Safety Manual (Draft). U.S. Environmental Protection Agency, Office of Air Quality Planning and Standard, Research Triangle Park, NC. September 1978.

17.0 Tables, Diagrams, Flowcharts, and Validation Data.[Reserved]

Method 108B—Determination of Arsenic Content in Ore Samples From Nonferrous Smelters

Note: This method does not include all of the specifications (*e.g.,* equipment and supplies) and procedures (*e.g.,* sampling and analytical) essential to its performance. Some material is incorporated by reference from other methods in this appendix and in appendix A to 40 CFR part 60. Therefore, to obtain reliable results, persons using this method should have a thorough knowledge of at least the following additional test methods: Method 12 and Method 108A.

1.0 Scope and Application

1.1 Analytes.

Analyte	CAS No.	Sensitivity
Arsenic compounds as arsenic (As)	7440–38–2	Lower limit 10 µg/ml.

1.2 Applicability. This method applies to the determination of inorganic As content of process ore and reverberatory matte samples from nonferrous smelters and other sources as specified in an applicable subpart of the regulations. Samples resulting in an analytical concentration greater than 10 µg As/ml may be analyzed by this method. For lower level arsenic samples, Method 108C should be used.

1.3 Data Quality Objectives. Adherence to the requirements of this method will enhance the quality of the data obtained from air pollutant sampling methods.

2.0 Summary of Method

Arsenic bound in ore samples is liberated by acid digestion and analyzed by flame atomic absorption spectrophotometry (AAS).

3.0 Definitions[Reserved]

4.0 Interferences

Analysis for As by flame AAS is sensitive to the chemical composition and to the physical properties (*e.g.,* viscosity, pH) of the sample. The analytical procedure includes a check for matrix effects (Section 11.4).

5.0 Safety

5.1 Disclaimer. This method may involve hazardous materials, operations, and equipment. This test method may not address all of the safety problems associated with its use. It is the responsibility of the user to establish appropriate safety and health practices and determine the applicability of regulatory limitations prior to performing this test method.

5.2 Corrosive Reagents. The following reagents are hazardous. Personal protective equipment and safe procedures that prevent chemical splashes are recommended. If contact occurs, immediately flush with copious amounts of water

for at least 15 minutes. Remove clothing under shower and decontaminate. Treat residual chemical burns as thermal burns.

5.2.1 Hydrochloric acid (HCl). Highly corrosive liquid with toxic vapors. Vapors are highly irritating to eyes, skin, nose, and lungs, causing severe damage. May cause bronchitis, pneumonia, or edema of lungs. Exposure to concentrations of 0.13 to 0.2 percent can be lethal to humans in a few minutes. Provide ventilation to limit exposure. Reacts with metals, producing hydrogen gas.

5.2.2 Hydrofluoric Acid (HF). Highly corrosive to eyes, skin, nose, throat, and lungs. Reaction to exposure may be delayed by 24 hours or more. Provide ventilation to limit exposure.

5.2.3 Nitric Acid (HNO_3). Highly corrosive to eyes, skin, nose, and lungs. Vapors are highly toxic and can cause bronchitis, pneumonia, or edema of lungs. Reaction to inhalation may be delayed as long as 30 hours and still be fatal. Provide ventilation to limit exposure. Strong oxidizer. Hazardous reaction may occur with organic materials such as solvents.

5.2.4 Perchloric Acid ($HClO_4$). Corrosive to eyes, skin, nose, and throat. Provide ventilation to limit exposure. Very strong oxidizer. Keep separate from water and oxidizable materials to prevent vigorous evolution of heat, spontaneous combustion, or explosion. Heat solutions containing $HClO_4$only in hoods specifically designed for $HClO_4$.

6.0 Equipment and Supplies

6.1 Sample Preparation. The following items are required for sample preparation:

6.1.1 Teflon Beakers. 150-ml.

6.1.2 Graduated Pipets. 5-ml disposable.

6.1.3 Graduated Cylinder. 50-ml.

6.1.4 Volumetric Flask. 100-ml.

6.1.5 Analytical Balance. To measure within 0.1 mg.

6.1.6 Hot Plate.

6.1.7 Perchloric Acid Fume Hood.

6.2 Analysis. The following items are required for analysis:

6.2.1 Spectrophotometer. Equipped with an electrodeless discharge lamp and a background corrector to measure absorbance at 193.7 nm.

6.2.2 Beaker and Watch Glass. 400-ml.

6.2.3 Volumetric Flask. 1-liter.

6.2.4 Volumetric Pipets. 1-, 5-, 10-, and 25-ml.

7.0 Reagents and Standards

Unless otherwise indicated, it is intended that all reagents conform to the specifications established by the Committee on Analytical Reagents of the American Chemical Society, where such specifications are available; otherwise, use the best available grade.

7.1 Sample Preparation. The following reagents are required for sample preparation:

7.1.1 Water. Deionized distilled to meet ASTM D 1193–77 or 91 Type 3 (incorporated by reference—see §61.18).

7.1.2 Nitric Acid, Concentrated.

7.1.3 Hydrofluoric Acid, Concentrated.

7.1.4 Perchloric Acid, 70 Percent.

7.1.5 Hydrochloric Acid, Concentrated.

7.2 Analysis. The following reagents and standards are required for analysis:

7.2.1 Water. Same as in Section 7.1.1.

7.2.2 Stock Arsenic Standard, 1.0 mg As/ml. Dissolve 1.3203 g of primary grade As_20_3[dried at 105 °C (221 °F)] in a 400-ml beaker with 10 ml of $HNO_3$and 5 ml of HCl. Cover with a watch glass, and heat gently until dissolution is complete. Add 10 ml of $HNO_3$and 25 ml of $HClO_4$, evaporate to strong fumes of $HClO_4$, and reduce to about 20 ml volume. Cool, add 100 ml of water and 100 ml of HCl, and transfer quantitatively to a 1-liter volumetric flask. Dilute to volume with water and mix.

7.2.3 Acetylene. Suitable quality for AAS analysis.

7.2.4 Air. Suitable quality for AAS analysis.

8.0 Sample Collection, Preservation, Transport, and Storage

Same as in Method 108A, Sections 8.1 and 8.2.

9.0 Quality Control

Section	Quality control measure	Effect
10.2	Spectrophotometer calibration	Ensure linearity of spectrophotometer response to standards.
11.4	Check for matrix effects	Eliminate matrix effects.

10.0 Calibration and Standardization

Note: Maintain a laboratory log of all calibrations.

10.1 Preparation of Standard Solutions. Pipet 1, 5, 10, and 25 ml of the stock As solution into separate 100-ml volumetric flasks. Add 2 ml of $HClO_4$, 10 ml of HCl, and dilute to the mark with water. This will provide standard concentrations of 10, 50, 100, and 250 µg As/ml.

10.2 Calibration Curve and Spectrophotometer Calibration Quality Control. Same as Method 108A, Sections 10.2 and 10.3

11.0 Analytical Procedure

11.1 Sample Preparation. Weigh 100 to 1000 mg of finely pulverized sample to the nearest 0.1 mg. Transfer the sample to a 150-ml Teflon beaker. Dissolve the sample by adding 15 ml of HNO_3, 10 ml of HCl, 10 ml of HF, and 10 ml of $HClO_4$in the exact order as described, and let stand for 10 minutes. In a $HClO_4$fume hood, heat on a hot plate until 2–3 ml of $HClO_4$remain, then cool. Add 20 ml of water and 10 ml of HCl. Cover and warm until the soluble salts are in solution. Cool, and transfer quantitatively to a 100-ml volumetric flask. Dilute to the mark with water.

11.2 Spectrophotometer Preparation. Same as in Method 108A, Section 11.2.

11.3 Arsenic Determination. If the sample concentration falls outside the range of the calibration curve, make an appropriate dilution with 2 percent $HClO_4$/10 percent HCl (prepared by diluting 2 ml concentrated $HClO_4$and 10 ml concentrated HCl to 100 ml with water) so that the final concentration falls within the range of the curve. Using the calibration curve, determine the As concentration in each sample.

Note: Because instruments vary between manufacturers, no detailed operating instructions will be given here. Instead, the instrument manufacturer's detailed operating instructions should be followed.

Run a blank and standard at least after every five samples to check the spectrophotometer calibration. The peak height of the blank must pass through a point no further from the origin than ±2 percent of the recorder full scale. The difference between the measured concentration of the standard (the product of the corrected average peak height and the reciprocal of the least squares slope) and the actual concentration of the standard must be less than 7 percent, or recalibration of the analyzer is required.

11.4 Mandatory Check for Matrix Effects on the Arsenic Results. Same as Method 12, Section 11.5.

12.0 Data Analysis and Calculations

Same as in Method 108A, Section 12.0.

13.0 Method Performance

13.1 Sensitivity. The lower limit of flame AAS is 10 µg As/ml.

14.0 Pollution Prevention[Reserved]

15.0 Waste Management[Reserved]

16.0 References

Same as in Method 108A, Section 16.0.

17.0 Tables, Diagrams, Flowcharts, and Validation Data[Reserved]

Method 108C—Determination of Arsenic Content in Ore Samples From Nonferrous Smelters (Molybdenum Blue Photometric Procedure)

Note: This method does not include all of the specifications (*e.g.,* equipment and supplies) and procedures (*e.g.,* sampling and analytical) essential to its performance. Some material is incorporated by reference from other methods in this part. Therefore, to obtain reliable results, persons using this method should have a thorough knowledge of at least Method 108A.

1.0 Scope and Application

1.1 Analytes.

Analyte	CAS No.	Sensitivity
Arsenic compounds as arsenic (As)	7440–38–2	Lower limit 0.0002 percent As by weight.

1.2 Applicability. This method applies to the determination of inorganic As content of process ore and reverberatory matte samples from nonferrous smelters and other sources as specified in an applicable subpart of the regulations.

1.3 Data Quality Objectives. Adherence to the requirements of this method will enhance the quality of the data obtained from air pollutant sampling methods.

2.0 Summary of Method

Arsenic bound in ore samples is liberated by acid digestion and analyzed by the molybdenum blue photometric procedure.

3.0 Definitions.[Reserved]

4.0 Interferences.[Reserved]

5.0 Safety

5.1 Disclaimer. This method may involve hazardous materials, operations, and equipment. This test method may not address all of the safety problems associated with its use. It is the responsibility of the user to establish appropriate safety and health practices and determine the applicability of regulatory limitations prior to performing this test method.

5.2 Corrosive Reagents. The following reagents are hazardous. Personal protective equipment and safe procedures that prevent chemical splashes are recommended. If contact occurs, immediately flush with copious amounts of water for at least 15 minutes. Remove clothing under shower and decontaminate. Treat residual chemical burns as thermal burns.

5.2.1 Hydrochloric Acid (HCl). Highly corrosive liquid with toxic vapors. Vapors are highly irritating to eyes, skin, nose, and lungs, causing severe damage. May cause bronchitis, pneumonia, or edema of lungs. Exposure to concentrations of 0.13 to 0.2 percent can be lethal to humans in a few minutes. Provide ventilation to limit exposure. Reacts with metals, producing hydrogen gas.

5.2.2 Hydrofluoric Acid (HF). Highly corrosive to eyes, skin, nose, throat, and lungs. Reaction to exposure may be delayed by 24 hours or more. Provide ventilation to limit exposure.

5.2.3 Nitric Acid (HNO_4). Highly corrosive to eyes, skin, nose, and lungs. Vapors are highly toxic and can cause bronchitis, pneumonia, or edema of lungs. Reaction to inhalation may be delayed as long as 30 hours and still be fatal. Provide ventilation to limit exposure. Strong oxidizer. Hazardous reaction may occur with organic materials such as solvents.

5.2.4 Perchloric Acid ($HClO_4$). Corrosive to eyes, skin, nose, and throat. Provide ventilation to limit exposure. Very strong oxidizer. Keep separate from water and oxidizable materials to prevent vigorous evolution of heat, spontaneous combustion, or explosion. Heat solutions containing $HClO_4$only in hoods specifically designed for $HClO_4$.

5.2.5 Sulfuric acid (H_2SO_4). Rapidly destructive to body tissue. Will cause third degree burns. Eye damage may result in blindness. Inhalation may be fatal from spasm of the larynx, usually within 30 minutes. May cause lung tissue damage with edema. 3 mg/m^3 will cause lung damage in uninitiated. 1 mg/m^3 for 8 hours will cause lung damage or, in higher concentrations, death. Provide ventilation to limit inhalation. Reacts violently with metals and organics.

6.0 Equipment and Supplies

6.1 Sample Preparation. The following items are required for sample preparation:

6.1.1 Analytical Balance. To measure to within 0.1 mg.

6.1.2 Erlenmeyer Flask. 300-ml.

6.1.3 Hot Plate.

6.1.4 Distillation Apparatus. No. 6, in ASTM E 50–82, 86, or 90 (Reapproved 1995)(incorporated by reference—see §61.18); detailed in Figure 108C–1.

6.1.5 Graduated Cylinder. 50-ml.

6.1.6 Perchloric Acid Fume Hood.

6.2 Analysis. The following items are required for analysis:

6.2.1 Spectrophotometer. Capable of measuring at 660 nm.

6.2.2 Volumetric Flasks. 50- and 100-ml.

7.0 Reagents and Standards

Unless otherwise indicated, it is intended that all reagents conform to the specifications established by the Committee on Analytical Reagents of the American Chemical Society, where such specifications are available; otherwise, use the best available grade.

7.1 Sample Preparation. The following reagents are required for sample preparation:

7.1.1 Water. Deionized distilled to meet ASTM D 1193–77 or 91 Type 3 (incorporated by reference—see §61.18). When high concentrations of organic matter are not expected to be present, the $KMnO_4$test for oxidizable organic matter may be omitted. Use in all dilutions requiring water.

7.1.2 Nitric Acid, Concentrated.

7.1.3 Hydrofluoric Acid, Concentrated.

7.1.4 Sulfuric Acid, Concentrated.

7.1.5 Perchloric Acid, 70 Percent.

7.1.6 Hydrochloric Acid, Concentrated.

7.1.7 Dilute Hydrochloric Acid. Add one part concentrated HCl to nine parts water.

7.1.8 Hydrazine Sulfate ($(NH_2)_2 \cdot H_2SO_4$).

7.1.9 Potassium Bromide (KBr).

7.1.10 Bromine Water, Saturated.

7.2 Analysis. The following reagents and standards are required for analysis:

7.2.1 Water. Same as in Section 7.1.1.

7.2.2 Methyl Orange Solution, 1 g/liter.

7.2.3 Ammonium Molybdate Solution, 5 g/liter. Dissolve 0.5 g $(NH_4)Mo_7O_{24}\cdot 4H_2O$ in water in a 100-ml volumetric flask, and dilute to the mark. This solution must be freshly prepared.

7.2.4 Standard Arsenic Solution, 10 µg As/ml. Dissolve 0.13203 g of As_2O_3in 100 ml HCl in a 1-liter volumetric flask. Add 200 ml of water, cool, dilute to the mark with water, and mix. Transfer 100 ml of this solution to a 1-liter volumetric flask, add 40 ml HCl, cool, dilute to the mark, and mix.

7.2.5 Hydrazine Sulfate Solution, 1 g/liter. Dissolve 0.1 g of $[(NH_2)_2\cdot H_2SO_4]$ in water, and dilute to 100 ml in a volumetric flask. This solution must be freshly prepared.

7.2.6 Potassium Bromate ($KBrO_3$) Solution, 0.03 Percent Weight by Volume (W/V). Dissolve 0.3 g $KBrO_3$in water, and dilute to 1 liter with water.

7.2.7 Ammonium Hydroxide (NH_4OH), Concentrated.

7.2.8 Boiling Granules.

7.2.9 Hydrochloric Acid, 50 percent by volume. Dilute equal parts concentrated HCl with water.

8.0 Sample Collection, Preservation, Transport, and Storage

Same as in Method 108A, Sections 8.1 and 8.2.

9.0 Quality Control

Section	Quality control measure	Effect
10.2	Calibration curve preparation	Ensure linearity of spectrophotometric response to standards.

10.0 Calibration and Standardizations

Note: Maintain a laboratory log of all calibrations.

10.1 Preparation of Standard Solutions. Transfer 1.0, 2.0, 4.0, 8.0, 12.0, 16.0, and 20.0 ml of standard arsenic solution (10 µg/ml) to each of seven 50-ml volumetric flasks. Dilute to 20 ml with dilute HCl. Add one drop of methyl orange solution and neutralize to the yellow color with dropwise addition of NH_4OH. Just bring back to the red color by dropwise addition of dilute HCl, and add 10 ml in excess. Proceed with the color development as described in Section 11.2.

10.2 Calibration Curve. Plot the spectrophotometric readings of the calibration solutions against µg As per 50 ml of solution. Use this curve to determine the As concentration of each sample.

10.3 Spectrophotometer Calibration Quality Control. Calculate the least squares slope of the calibration curve. The line must pass through the origin or through a point no further from the origin than ±2 percent of the recorder full scale. Multiply the corrected peak height by the reciprocal of the least squares slope to determine the distance each calibration point lies from the theoretical calibration line. The difference between the calculated concentration values and the actual concentrations must be less than 7 percent for all standards.

11.0 Analytical Procedure

11.1 Sample Preparation.

11.1.1 Weigh 1.0 g of finely pulverized sample to the nearest 0.1 mg. Transfer the sample to a 300 ml Erlenmeyer flask and add 15 ml of HNO_3, 4 ml HCl, 2 ml HF, 3 ml $HClO_4$, and 15 ml H_2SO_4, in the order listed. In a $HClO_4$fume hood, heat on a hot plate to decompose the sample. Then heat while swirling over an open flame until dense white fumes evolve. Cool, add 15 ml of water, swirl to hydrate the H_2SO_4completely, and add several boiling granules. Cool to room temperature.

11.1.2 Add 1 g of KBr, 1 g hydrazine sulfate, and 50 ml HCl. Immediately attach the distillation head with thermometer and dip the side arm into a 50-ml graduated cylinder containing 25 ml of water and 2 ml of bromine water. Keep the graduated cylinder immersed in a beaker of cold water during distillation. Distill until the temperature of the vapor in the flask reaches 107 °C (225 °F). When distillation is complete, remove the flask from the hot plate, and simultaneously wash down the side arm with water as it is removed from the cylinder.

11.1.3 If the expected arsenic content is in the range of 0.0020 to 0.10 percent, dilute the distillate to the 50-ml mark of the cylinder with water, stopper, and mix. Transfer a 5.0-ml aliquot to a 50-ml volumetric flask. Add 10 ml of water and a boiling granule. Place the flask on a hot plate, and heat gently until the bromine is expelled and the color of methyl orange indicator persists upon the addition of 1 to 2 drops. Cool the flask to room temperature. Neutralize just to the yellow color of the indicator with dropwise additions of NH_4OH. Bring back to the red color by dropwise addition of dilute HCl, and add 10 ml excess. Proceed with the molybdenum blue color development as described in Section 11.2.

11.1.4 If the expected arsenic content is in the range of 0.0002 to 0.0010 percent As, transfer either the entire initial distillate or the measured remaining distillate from Section 11.1.2 to a 250-ml beaker. Wash the cylinder with two successive portions of concentrated HNO_3, adding each portion to the distillate in the beaker. Add 4 ml of concentrated $HClO_4$, a boiling granule, and cover with a flat watch glass placed slightly to one side. Boil gently on a hot plate until the volume is reduced to approximately 10 ml. Add 3 ml of HNO_3, and continue the evaporation until $HClO_4$is refluxing on the beaker cover. Cool briefly, rinse the underside of the watch glass and the inside of the beaker with about 3–5 ml of water, cover, and continue the evaporation to expel all but 2 ml of the $HClO_4$.

Note: If the solution appears cloudy due to a small amount of antimony distilling over, add 4 ml of 50 percent HCl and 5 ml of water, cover, and warm gently until clear. If cloudiness persists, add 5 ml of $HNO_3$and 2 ml H_2SO_4. Continue the evaporation of volatile acids to solubilize the antimony until dense white fumes of H_2SO_4appear. Retain at least 1 ml of the H_2SO_4.

11.1.5 To the 2 ml of $HClO_4$solution or 1 ml of H_2SO_4solution, add 15 ml of water, boil gently for 2 minutes, and then cool. Proceed with the molybdenum blue color development by neutralizing the solution directly in the beaker just to the yellow indicator color by dropwise addition of NH_4OH. Obtain the red color by dropwise addition of dilute HCl. Transfer the solution to a 50-ml volumetric flask. Rinse the beaker successively with 10 ml of dilute HCl, followed by several small portions of water. At this point the volume of solution in the flask should be no more than 40 ml. Continue with the color development as described in Section 11.2.

11.2 Analysis.

11.2.1 Add 1 ml of $KBrO_3$solution to the flask and heat on a low-temperature hot plate to about 50 °C (122 °F) to oxidize the arsenic and methyl orange. Add 5.0 ml of ammonium molybdate solution to the warm solution and mix. Add 2.0 ml of hydrazine sulfate solution, dilute until the solution comes within the neck of the flask, and mix. Place the flask in a 400 ml beaker, 80 percent full of boiling water, for 10 minutes. Enough heat must be supplied to prevent the water bath from cooling much below the boiling point upon inserting the volumetric flask. Remove the flask, cool to room temperature, dilute to the mark, and mix.

11.2.2 Transfer a suitable portion of the reference solution to an absorption cell, and adjust the spectrophotometer to the initial setting using a light band centered at 660 nm. While maintaining this spectrophotometer adjustment, take the readings of the calibration solutions followed by the samples.

12.0 Data Analysis and Calculations

Same as in Method 108A, Section 12.0.

13.0 Method Performance.[Reserved]

14.0 Pollution Prevention.[Reserved]

15.0 Waste Management.[Reserved]

16.0 References

1. Ringwald, D. Arsenic Determination on Process Materials from ASARCO's Copper Smelter in Tacoma, Washington. Unpublished Report. Prepared for the Emission Measurement Branch, Technical Support Division, U.S. Environmental Protection Agency, Research Triangle Park, North Carolina. August 1980. 35 pp.

17.0 Tables, Diagrams, Flowcharts, and Validation Data

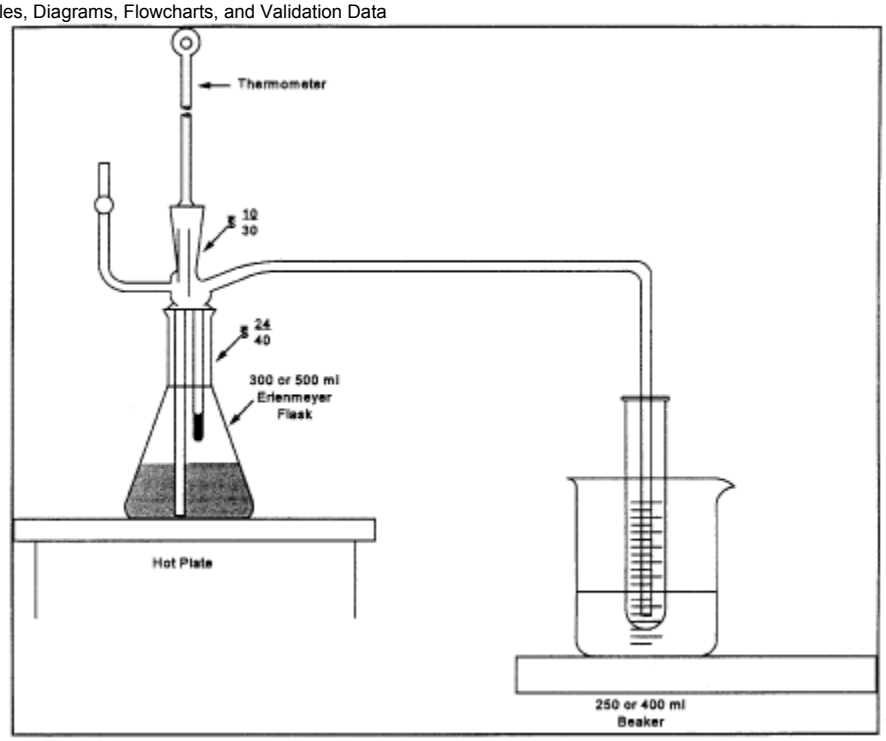

Figure 108C-1. Distillation Apparatus.

View or download PDF

Method 111—Determination of Polonium–210 Emissions From Stationary Sources

Note: This method does not include all of the specifications (*e.g.,* equipment and supplies) and procedures (*e.g.,* sampling and analytical) essential to its performance. Some material is incorporated by reference from methods in appendix A to 40 CFR part 60. Therefore, to obtain reliable results, persons using this method should have a thorough knowledge of at least the following additional test methods: Method 1, Method 2, Method 3, and Method 5.

1.0 Scope and Application

1.1 Analytes.

Analyte	CAS No.	Sensitivity
Polonium	7440–08–6	Not specified.

1.2 Applicability. This method is applicable for the determination of the polonium-210 content of particulate matter samples collected from stationary source exhaust stacks, and for the use of these data to calculate polonium-210 emissions from individual sources and from all affected sources at a facility.

1.3 Data Quality Objectives. Adherence to the requirements of this method will enhance the quality of the data obtained from air pollutant sampling methods.

2.0 Summary of Method

A particulate matter sample, collected according to Method 5, is analyzed for polonium-210 content: the polonium-210 in the sample is put in solution, deposited on a metal disc, and the radioactive disintegration rate measured. Polonium in acid solution spontaneously deposits on surfaces of metals that are more electropositive than polonium. This principle is routinely used in the radiochemical analysis of polonium-210. Data reduction procedures are provided, allowing the calculation of polonium-210 emissions from individual sources and from all affected sources at a facility, using data obtained from Methods 2 and 5 and from the analytical procedures herein.

3.0 Definitions[Reserved]

4.0 Interferences[Reserved]

5.0 Safety

5.1 Disclaimer. This method may involve hazardous materials, operations, and equipment. This test method may not address all of the safety problems associated with its use. It is the responsibility of the user of this test method to establish appropriate safety and health practices and determine the applicability of regulatory limitations prior to performing this test method.

5.2 Corrosive Reagents. The following reagents are hazardous. Personal protective equipment and safe procedures are useful in preventing chemical splashes. If contact occurs, immediately flush with copious amounts of water at least 15 minutes. Remove clothing under shower and decontaminate. Treat residual chemical burns as thermal burns.

5.2.1 Hydrochloric Acid (HCl). Highly corrosive liquid with toxic vapors. Vapors are highly irritating to eyes, skin, nose, and lungs, causing severe damage. May cause bronchitis, pneumonia, or edema of lungs. Exposure to concentrations of 0.13 to 0.2 percent can be lethal to humans in a few minutes. Provide ventilation to limit exposure. Reacts with metals, producing hydrogen gas.

5.2.2 Hydrofluoric Acid (HF). Highly corrosive to eyes, skin, nose, throat, and lungs. Reaction to exposure may be delayed by 24 hours or more. Provide ventilation to limit exposure.

5.2.3 Nitric Acid (HNO_3). Highly corrosive to eyes, skin, nose, and lungs. Vapors cause bronchitis, pneumonia, or edema of lungs. Reaction to inhalation may be delayed as long as 30 hours and still be fatal. Provide ventilation to limit exposure. Strong oxidizer. Hazardous reaction may occur with organic materials such as solvents.

5.2.4 Perchloric Acid ($HClO_4$). Corrosive to eyes, skin, nose, and throat. Provide ventilation to limit exposure. Keep separate from water and oxidizable materials to prevent vigorous evolution of heat, spontaneous combustion, or explosion. Heat solutions containing $HClO_4$only in hoods specifically designed for $HClO_4$.

6.0 Equipment and Supplies

6.1 Alpha Spectrometry System. Consisting of a multichannel analyzer, biasing electronics, silicon surface barrier detector, vacuum pump and chamber.

6.2 Constant Temperature Bath at 85 °C (185 °F).

6.3 Polished Silver Discs. 3.8 cm diameter, 0.4 mm thick with a small hole near the edge.

6.4 Glass Beakers. 400 ml, 150 ml.

6.5 Hot Plate, Electric.

6.6 Fume Hood.

6.7 Teflon Beakers, 150 ml.

6.8 Magnetic Stirrer.

6.9 Stirring Bar.

6.10 Hooks. Plastic or glass, to suspend plating discs.

6.11 Internal Proportional Counter. For measuring alpha particles.

6.12 Nucleopore Filter Membranes. 25 mm diameter, 0.2 micrometer pore size or equivalent.

6.13 Planchets. Stainless steel, 32 mm diameter with 1.5 mm lip.

6.14 Transparent Plastic Tape. 2.5 cm wide with adhesive on both sides.

6.15 Epoxy Spray Enamel.

6.16 Suction Filter Apparatus. For 25 mm diameter filter.

6.17 Wash Bottles, 250 ml capacity.

6.18 Graduated Cylinder, plastic, 25 ml capacity.

6.19 Volumetric Flasks, 100 ml, 250 ml.

7.0 Reagents and Standards

Unless otherwise indicated, it is intended that all reagents conform to the specifications established by the Committee on Analytical Reagents of the American Chemical Society, where such specifications are available; otherwise, use the best available grade.

7.1 Ascorbic Acid.

7.2 Ammonium Hydroxide (NH_4OH), 15 M.

7.3 Water. Deionized distilled, to conform to ASTM D 1193–77 or 91 (incorporated by reference—see §61.18), Type 3. Use in all dilutions requiring water.

7.4 Ethanol (C_2H_5OH), 95 percent.

7.5 Hydrochloric Acid, 12 M.

7.6 Hydrochloric Acid, 1 M. Dilute 83 ml of the 12 M HCl to 1 liter with distilled water.

7.7 Hydrofluoric Acid, 29 M.

7.8 Hydrofluoric Acid, 3 M. Dilute 52 ml of the 29 M HF to 500 ml with distilled water. Use a plastic graduated cylinder and storage bottle.

7.9 Lanthanum Carrier, 0.1 mg La+3/ml. Dissolve 0.078 gram lanthanum nitrate, $La(NO_3)_3 \cdot 6H_2O$ in 250 ml of 1 M HCl.

7.10 Nitric Acid, 16 M.

7.11 Perchloric Acid, 12 M.

7.12 Polonium-209 Solution.

7.13 Silver Cleaner. Any mild abrasive commercial silver cleaner.

7.14 Degreaser.

7.15 Standard Solution. Standardized solution of an alpha-emitting actinide element, such as plutonium-239 or americium-241.

8.0 Sample Collection, Preservation, Transport, and Storage.[Reserved]

9.0 Quality Control

9.1 General Requirement.

9.1.1 All analysts using this method are required to demonstrate their ability to use the method and to define their respective accuracy and precision criteria.

9.2 Miscellaneous Quality Control Measures

Section	Quality control measure	Effect
10.1	Standardization of alpha spectrometry system	Ensure precision of sample analyses.
10.3	Standardization of internal proportional counter	Ensure precise sizing of sample aliquot.
11.1, 11.2	Determination of procedure background and instrument background	Minimize background effects.

10.0 Calibration and Standardization

10.1 Standardization of Alpha Spectrometry System.

10.1.1 Add a quantity of the actinide standard solution to a 100 ml volumetric flask so that the final concentration when diluted to a volume of 100 ml will be approximately 1_pCi/ml.

10.1.2 Add 10 ml of 16 M $HNO_3$and dilute to 100 ml with water.

10.1.3 Add 20 ml of 1 M HCl to each of six 150 ml beakers. Add 1.0 ml of lanthanum carrier, 0.1 mg lanthanum per ml, to the acid solution in each beaker.

10.1.4 Add 1.0 ml of the 1 pCi/ml working solution (from Section 10.1.1) to each beaker. Add 5.0 ml of 3 M HF to each beaker.

10.1.5 Cover beakers and allow solutions to stand for a minimum of 30 minutes. Filter the contents of each beaker through a separate filter membrane using the suction filter apparatus. After each filtration, wash the filter membrane with 10 ml of distilled water and 5 ml of ethanol, and allow the filter membrane to air dry on the filter apparatus.

10.1.6 Carefully remove the filter membrane and mount it, filtration side up, with double-side tape on the inner surface of a planchet. Place planchet in an alpha spectrometry system and count each planchet for 1000 minutes.

10.1.7 Calculate the counting efficiency of the detector for each aliquot of the 1 pCi/ml actinide working solution using Eq. 111–1 in Section 12.2.

10.1.8 Determine the average counting efficiency of the detector, E_c, by calculating the average of the six determinations.

10.2 Preparation of Standardized Solution of Polonium-209.

10.2.1 Add a quantity of the Po-209 solution to a 100 ml volumetric flask so that the final concentration when diluted to a 100 ml volume will be approximately 1 pCi/ml.

10.2.2 Follow the procedures outlined in Sections 10.1.2 through 10.1.6, except substitute 1.0 ml of polonium-209 tracer solution (Section 10.2.1) and 3.0 ml of 15 M ammonium hydroxide for the 1 pCi/ml actinide working solution and the 3 M HF, respectively.

10.2.3 Calculate the activity of each aliquot of the polonium-209 tracer solution using Eq. 111–2 in Section 12.3.

10.2.4 Determine the average activity of the polonium-209 tracer solution, F, by averaging the results of the six determinations.

10.3 Standardization of Internal Proportional Counter

10.3.1 Add a quantity of the actinide standard solution to a 100 ml volumetric flask so that the final concentration when diluted to a 100 ml volume will be approximately 100 pCi/ml.

10.3.2 Follow the procedures outlined in Sections 10.1.2 through 10.1.6, except substitute the 100 pCi/ml actinide working solution for the 1 pCi/ml solution, place the planchet in an internal proportional counter (instead of an alpha spectrometry system), and count for 100 minutes (instead of 1000 minutes).

10.3.3 Calculate the counting efficiency of the internal proportional counter for each aliquot of the 100 pCi/ml actinide working solution using Eq. 111–3 in 12.4.

10.3.4 Determine the average counting efficiency of the internal proportional counter, E_I, by averaging the results of the six determinations.

11.0 Analytical Procedure

Note: Perform duplicate analyses of all samples, including background counts and Method 5 samples. Duplicate measurements are considered acceptable when the difference between them is less than two standard deviations as described in EPA 600/4–77–001 or subsequent revisions.

11.1 Determination of Procedure Background. Background counts used in all equations are determined by performing the specific analysis required using the analytical reagents only. All procedure background counts and sample counts for the internal proportional counter should utilize a counting time of 100 minutes; for the alpha spectrometry system, 1000 minutes. These background counts should be performed no less frequently than once per 10 sample analyses.

11.2 Determination of Instrument Background. Instrument backgrounds of the internal proportional counter and the alpha spectrometry system should be determined on a weekly basis. Instrument background should not exceed procedure background. If this occurs, it may be due to a malfunction or contamination, and should be corrected before use.

11.4 Sample Preparation. Treat the Method 5 samples [*i.e.,* the glass fiber filter (Container No. 1) and the acetone rinse (Container No. 2)] as follows:

11.4.1 Container No. 1. Transfer the filter and any loose particulate matter from the sample container to a 150-ml Teflon beaker.

11.4.2 Container No. 2. Note the level of liquid in the container, and confirm on the analysis sheet whether leakage occurred during transport. If a noticeable amount of leakage has occurred, either void the sample or use methods, subject to the approval of the Administrator, to correct the final results. Transfer the contents to a 400-ml glass beaker. Add polonium-209 tracer solution to the glass beaker in an amount approximately equal to the amount of polonium-210 expected in the total particulate sample. Record the activity of the tracer solution added. Add 16 M nitric acid to the beaker to digest and loosen the residue.

11.4.3 Transfer the contents of the glass beaker to the Teflon beaker containing the glass fiber filter. Rinse the glass beaker with 16 M HNO_3. If necessary, reduce the volume in the beaker by evaporation until all of the nitric acid $HNO_3$from the glass beaker has been transferred to the Teflon beaker.

11.4.4 Add 30 ml of 29 M HF to the Teflon beaker and evaporate to near dryness on a hot plate in a properly operating hood.

Note: Do not allow the residue to go to dryness and overheat; this will result in loss of polonium.

11.4.5 Repeat step 11.4.4 until the filter is dissolved.

11.4.6 Add 100 ml of 16 M $HNO_3$to the residue in the Teflon beaker and evaporate to near dryness.

Note: Do not allow the residue to go to dryness.

11.4.7 Add 50 ml of 16 M $HNO_3$and 10 ml of 12 M perchloric acid to the Teflon beaker and heat until dense fumes of perchloric acid are evolved.

11.4.8 Repeat steps 11.4.4 to 11.4.7 as necessary until sample is completely dissolved.

11.4.9 Add 10 ml of 12 M HCl to the Teflon beaker and evaporate to dryness. Repeat additions and evaporations several times.

11.4.10 Transfer the sample to a 250-ml volumetric flask and dilute to volume with 3 M HCl.

11.5 Sample Screening. To avoid contamination of the alpha spectrometry system, check each sample as follows:

11.5.1 Add 20 ml of 1 M HCl, 1 ml of the lanthanum carrier solution (0.1 mg La/ml), a 1 ml aliquot of the sample solution from Section 11.4.10, and 3 ml of 15 M ammonium hydroxide to a 250-ml beaker in the order listed. Allow this solution to stand for a minimum of 30 minutes.

11.5.2 Filter the solution through a filter membrane using the suction filter apparatus. Wash the filter membrane with 10 ml of water and 5 ml of ethanol, and allow the filter membrane to air dry on the filter apparatus.

11.5.3 Carefully remove the filter membrane and mount it, filtration side up, with double-side tape on the inner surface of a planchet. Place the planchet in an internal proportional counter, and count for 100 minutes.

11.5.4 Calculate the activity of the sample using Eq. 111–4 in Section 12.5.

11.5.5 Determine the aliquot volume of the sample solution from Section 11.4.10 to be analyzed for polonium-210, such that the aliquot contains an activity between 1 and 4 picocuries. Use Eq. 111–5 in Section 12.6.

11.6 Preparation of Silver Disc for Spontaneous Electrodeposition.

11.6.1 Clean both sides of the polished silver disc with silver cleaner and with degreaser.

11.6.2 Place disc on absorbent paper and spray one side with epoxy spray enamel. This should be carried out in a well-ventilated area, with the disc lying flat to keep paint on one side only. Allow paint to dry for 24 hours before using disc for deposition.

11.7 Sample Analysis.

11.7.1 Add the aliquot of sample solution from Section 11.4.10 to be analyzed for polonium-210, the volume of which was determined in Section 11.5.5, to a suitable 200-ml container to be placed in a constant temperature bath.

Note: Aliquot volume may require a larger container.

11.7.2 If necessary, bring the volume to 100 ml with 1 M HCl. If the aliquot volume exceeds 100 ml, use total aliquot.

11.7.3 Add 200 mg of ascorbic acid and heat solution to 85 °C (185 °F) in a constant temperature bath.

11.7.4 Suspend a silver disc in the heated solution using a glass or plastic rod with a hook inserted through the hole in the disc. The disc should be totally immersed in the solution, and the solution must be stirred constantly, at all times during the plating operation. Maintain the disc in solution for 3 hours.

11.7.5 Remove the silver disc, rinse with deionized distilled water, and allow to air dry at room temperature.

11.7.6 Place the disc, with deposition side (unpainted side) up, on a planchet and secure with double-side plastic tape. Place the planchet with disc in alpha spectrometry system and count for 1000 minutes.

12.0 Data Analysis and Calculations.

12.1 Nomenclature.

A = Picocuries of polonium-210 in the Method 5 sample (from Section 12.8).

A_A= Picocuries of actinide added.

A_L= Volume of sample aliquot used, in ml (specified in Section 11.5.1 as 1 ml).

A_S= Aliquot to be analyzed, in ml.

B_B= Procedure background counts measured in polonium-209 spectral region.

B_T= Polonium-209 tracer counts in sample.

C_T= Total counts in polonium-210 spectral region.

D = Decay correction for time “t” (in days) from sample collection to sample counting, given by: $D=e^{-0.005t}$

E_C= Average counting efficiency of detector (from Section 10.1.8), as counts per disintegration.

E_{Ci}= Counting efficiency of the detector for aliquot i of the actinide working solution, counts per disintegration.

E_I= Average counting efficiency of the internal proportional counter, as determined in Section 10.3.4, counts per disintegration.

E_{Ii}= Counting efficiency of the internal proportional counter for aliquot i of the 100 pCi/ml actinide working solution, counts per disintegration.

E_Y= The fraction of polonium-209 recovered on the planchet (from Section 12.7).

F= Average activity of polonium-209 in sample (from Section 10.2.4), in pCi.

F_i= activity of aliquot i of the polonium-209 tracer solution, in pCi.

L = Dilution factor (unitless). This is the volume of sample solution prepared (specified as 250 ml in Section 11.1.10) divided by the volume of the aliquot of sample solution analyzed for polonium-210 (from Section 11.7.1).

M_i= Phosphorous rock processing rate of the source being tested, during run i, Mg/hr.

M_k= Phosphate rock processed annually by source k, in Mg/yr.

n = Number of calciners at the elemental phosphorus plant.

P = Total activity of sample solution from Section 11.4.10, in pCi (see Eq. 111–4).

Q_{sd}= Volumetric flow rate of effluent stream, as determined by Method 2, in dscm/hr.

S = Annual polonium-210 emissions from the entire facility, in curies/yr.

Vm(std)= Volume of air sample, as determined by Method 5, in dscm.

X_k= Emission rate from source k, from Section 12.10, in curies/Mg.

10^{-12}= Curies per picocurie.

2.22 = Disintegrations per minute per picocurie.

250 = Volume of solution from Section 11.4.10, in ml.

12.2 Counting Efficiency. Calculate the counting efficiency of the detector for each aliquot of the 1 pCi/ml actinide working solution using Eq. 111–1.

$$E_\alpha = \frac{C_S - C_B}{2.22\ A_A T} \qquad \text{Eq. 111-1}$$

Where:

C_B= Background counts in same peak area as C_S.

C_S= Gross counts in actinide peak.

T = Counting time in minutes, specified in Section 10.1.6 as 1000 minutes.

12.3 Polonium-209 Tracer Solution Activity. Calculate the activity of each aliquot of the polonium-209 tracer solution using Eq. 111–2.

$$F_i = \frac{C_S - C_B}{2.22\ \mathrm{E}_{Ci} T} \qquad Eq.\ 111\text{-}2$$

Where:

C_B= Background counts in the 4.88 MeV region of spectrum the in the counting time T.

C_S= Gross counts of polonium-209 in the 4.88 MeV region of the spectrum in the counting time T.

T = Counting time, specified in Section 10.1.6 as 1000 minutes.

12.4 Control Efficiency of Internal Proportional Counter. Calculate the counting efficiency of the internal proportional counter for each aliquot of the 100 pCi/ml actinide working solution using Eq. 111–3.

$$E_{Ii} = \frac{C_S - C_B}{2.22\ \mathrm{A}_A T} \qquad Eq.\ 111\text{-}3$$

Where:

C_B= Gross counts of procedure background.

C_S= Gross counts of standard.

T = Counting time in minutes, specified in Section 10.3.2 as 100 minutes.

12.5 Calculate the activity of the sample using Eq. 111–4.

$$P = \frac{250\ (C_S - C_B)}{2.22\ \overline{\mathrm{E}}_{\mathrm{I}} A_I T} \qquad Eq.\ 111\text{-}4$$

Where:

C_B= Total counts of procedure background. (See Section 11.1).

C_S= Total counts of screening sample.

T = Counting time for sample and background (which must be equal), in minutes (specified in Section 11.5.3 as 100 minutes).

12.6 Aliquot Volume. Determine the aliquot volume of the sample solution from Section 11.4.10 to be analyzed for polonium-210 , such that the aliquot contains an activity between 1 and 4 picocuries using Eq. 111–5.

$$A_s = \frac{250\ (\text{desired picocuries in aliquot})}{\mathrm{P}} \qquad Eq.\ 111\text{-}5$$

12.7 Polonium-209 Recovery. Calculate the fraction of polonium-209 recovered on the planchet, E_Y, using Eq. 111–6.

$$E_Y = \frac{B_T - B_B}{2.22\ \overline{F}\ \overline{E_C}\ T} \qquad Eq.\ 111\text{-}6$$

Where:

T = Counting time, specified in Section 11.1 as 1000 minutes.

12.8 Polonium-210 Activity. Calculate the activity of polonium-210 in the Method 5 sample (including glass fiber filter and acetone rinse) using Eq. 111–7.

$$A = \frac{(C_T - C_B)\ L}{2.22\ E_y\ \overline{E_C}\ T\ D} \qquad Eq.\ 111\text{-}7$$

Where:

C_B= Procedure background counts in polonium-210 spectral region.

T = Counting time, specified in Section 11.1 as 1000 minutes for all alpha spectrometry sample and background counts.

12.9 Emission Rate from Each Stack.

12.9.1 For each test run, i, on a stack, calculate the measured polonium-210 emission rate, R_{Si}, using Eq. 111–8.

$$R_{Si} = \frac{(10^{-12})\ A\ Q_{sd}}{V_{m(std)} M_i} \qquad Eq.\ 111\text{-}8$$

12.9.2 Determine the average polonium-210 emission rate from the stack, R_S, by taking the sum of the measured emission rates for all runs, and dividing by the number of runs performed.

12.9.3 Repeat steps 12.9.1 and 12.9.2 for each stack of each calciner.

12.10 Emission Rate from Each Source. Determine the total polonium-210 emission rate, X_k, from each source, k, by taking the sum of the average emission rates from all stacks to which the source exhausts.

12.11 Annual Polonium-210 Emission Rate from Entire Facility. Determine the annual elemental phosphorus plant emissions of polonium-210, S, using Eq. 111–9.

$$S = \frac{\sum_{k=1}^{n} (X_k M_k)}{n} \qquad Eq.\ 111\text{-}9$$

13.0 Method Performance.[Reserved]

14.0 Pollution Prevention.[Reserved]

15.0 Waste Management.[Reserved]

16.0 References

1. Blanchard, R.L. “Rapid Determination of Lead-210 and Polonium-210 in Environmental Samples by Deposition on Nickel.” Anal. Chem., *38* :189, pp. 189–192. February 1966.

17.0 Tables, Diagrams, Flowcharts, and Validation Data[Reserved]

Method 114—Test Methods for Measuring Radionuclide Emissions from Stationary Sources

1. *Purpose and Background*

This method provides the requirements for: (1) Stack monitoring and sample collection methods appropriate for radionuclides; (2) radiochemical methods which are used in determining the amounts of radionuclides collected by the stack sampling and; (3) quality assurance methods which are conducted in conjunction with these measurements. These methods are appropriate for emissions for stationary sources. A list of references is provided.

Many different types of facilities release radionuclides into air. These radionuclides differ in the chemical and physical forms, half-lives and type of radiation emitted. The appropriate combination of sample extraction, collection and analysis for an individual radionuclide is dependent upon many interrelated factors including the mixture of other radionuclides present. Because of this wide range of conditions, no single method for monitoring or sample collection and analysis of a radionuclide is applicable to all types of facilities. Therefore, a series of methods based on “principles of measurement” are described for monitoring and sample collection and analysis which are applicable to the measurement of radionuclides found in effluent streams at stationary sources. This approach provides the user with the flexibility to choose the most appropriate combination of monitoring and sample collection and analysis methods which are applicable to the effluent stream to be measured.

2. *Stack Monitoring and Sample Collection Methods*

Monitoring and sample collection methods are described based on “principles of monitoring and sample collection” which are applicable to the measurement of radionuclides from effluent streams at stationary sources. Radionuclides of most elements will be in the particulate form in these effluent streams and can be readily collected using a suitable filter media. Radionuclides of hydrogen, oxygen, carbon, nitrogen, the noble gases and in some circumstances iodine will be in the gaseous form. Radionuclides of these elements will require either the use of an in-line or off-line monitor to directly measure the radionuclides, or suitable sorbers, condensers or bubblers to collect the radionuclides.

2.1 Radionuclides as Particulates. The extracted effluent stream is passed through a filter media to remove the particulates. The filter must have a high efficiency for removal of sub-micron particles. The guidance in ANSI/HPS N13.1–1999 (section 6.6.2 Filter media) shall be followed in using filter media to collect particulates (incorporated by reference—see §61.18 of this part).

2.2 Radionuclides as Gases.

2.2.1 The Radionuclide Tritium (H–3). Tritium in the form of water vapor is collected from the extracted effluent sample by sorption, condensation or dissolution techniques. Appropriate collectors may include silica gel, molecular sieves, and ethylene glycol or water bubblers.

Tritium in the gaseous form may be measured directly in the sample stream using Method B–1, collected as a gas sample or may be oxidized using a metal catalyst to tritiated water and collected as described above.

2.2.2 Radionuclides of Iodine. Iodine is collected from an extracted sample by sorption or dissolution techniques. Appropriate collectors may include charcoal, impregnated charcoal, metal zeolite and caustic solutions.

2.2.3 Radionuclides of Argon, Krypton and Xenon. Radionuclides of these elements are either measured directly by an in-line or off-line monitor, or are collected from the extracted sample by low temperature sorption techniques, Appropriate sorbers may include charcoal or metal zeolite.

2.2.4 Radionuclides of Oxygen, Carbon, Nitrogen and Radon. Radionuclides of these elements are measured directly using an in-line or off-line monitor. Radionuclides of carbon in the form of carbon dioxide may be collected by dissolution in caustic solutions.

2.3 Definition of Terms

In-line monitor means a continuous measurement system in which the detector is placed directly in or adjacent to the effluent stream. This may involve either gross radioactivity measurements or specific radionuclide measurements. Gross measurements shall be made in conformance with the conditions specified in Methods A–4, B–2 and G–4.

Off-line monitor means a measurement system in which the detector is used to continuously measure an extracted sample of the effluent stream. This may involve either gross radioactivity measurements or specific radionuclide measurements. Gross measurements shall be made in conformance with the conditions specified in Methods A–4, B–2 and G–4.

Sample collection means a procedure in which the radionuclides are removed from an extracted sample of the effluent using a collection media. These collection media include filters, absorbers, bubblers and condensers. The collected sample is analyzed using the methods described in Section 3.

3. *Radionuclide Analysis Methods*

A series of methods based on “principles of measurement” are described which are applicable to the analysis of radionuclides collected from airborne effluent streams at stationary sources. These methods are applicable only under the conditions stated and within the limitations described. Some methods specify that only a single radionuclide be present in the sample or the chemically separated sample. This condition should be interpreted to mean that no other radionuclides are present in quantities which would interfere with the measurement.

Also identified (Table 1) are methods for a selected list of radionuclides. The listed radionuclides are those which are most commonly used and which have the greatest potential for causing dose to members of the public. Use of methods based on principles of measurement other than those described in this section must be approved in advance of use by the Administrator. For radionuclides not listed in Table 1, any of the described methods may be used provided the user can demonstrate that the applicability conditions of the method have been met.

The type of method applicable to the analysis of a radionuclide is dependent upon the type of radiation emitted, i.e., alpha, beta or gamma. Therefore, the methods described below are grouped according to principles of measurements for the analysis of alpha, beta and gamma emitting radionuclides.

3.1 Methods for Alpha Emitting Radionuclides

3.1.1 Method A–1, Radiochemistry-Alpha Spectrometry.

Principle: The element of interest is separated from other elements, and from the sample matrix using radiochemical techniques. The procedure may involve precipitation, ion exchange, or solvent extraction. Carriers (elements chemically similar to the element of interest) may be used. The element is deposited on a planchet in a very thin film by electrodeposition or by coprecipitation on a very small amount of carrier, such as lanthanum fluoride. The deposited element is then counted with an alpha spectrometer. The activity of the nuclide of interest is measured by the number of alpha counts in the appropriate energy region. A correction for chemical yield and counting efficiency is made using a standardized radioactive nuclide (tracer) of the same element. If a radioactive tracer is not available for the element of interest, a predetermined chemical yield factor may be used.

Applicability: This method is applicable for determining the activity of any alpha-emitting radionuclide, regardless of what other radionuclides are present in the sample provided the chemical separation step produces a very thin sample and removes all other radionuclides which could interfere in the spectral region of interest. APHA–605(2), ASTM–D–3972(13).

3.1.2 Method A–2, Radiochemistry-Alpha Counting.

Principle: The element of interest is separated from other elements, and from the sample matrix using radiochemistry. The procedure may involve precipitation, ion exchange, or solvent extraction. Carriers (elements chemically similar to the element of interest) may be used. The element is deposited on a planchet in a thin film and counted with an alpha counter. A correction for chemical yield (if necessary) is made. The alpha count rate measures the total activity of all emitting radionuclides of the separated element.

Applicability: This method is applicable for the measurement of any alpha-emitting radionuclide, provided no other alpha emitting radionuclide is present in the separated sample. It may also be applicable for determining compliance, when other radionuclides of the separated element are present, provided that the calculated emission rate is assigned to the radionuclide which could be present in the sample that has the highest dose conversion factor. IDO–12096(18).

3.1.3 Method A–3, Direct Alpha Spectrometry.

Principle: The sample, collected on a suitable filter, is counted directly on an alpha spectrometer. The sample must be thin enough and collected on the surface of the filter so that any absorption of alpha particle energy in the sample or the filter, which would degrade the spectrum, is minimal.

Applicability: This method is applicable to simple mixtures of alpha emitting radionuclides and only when the amount of particulates collected on the filter paper are relatively small and the alpha spectra is adequately resolved. Resolutions should be 50 keV (FWHM) or better, ASTM–D–3084(16).

3.1.4 Method A–4, Direct Alpha Counting (Gross alpha determination).

Principle: The sample, collected on a suitable filter, is counted with an alpha counter. The sample must be thin enough so that self-absorption is not significant and the filter must be of such a nature that the particles are retained on the surface.

Applicability: Gross alpha determinations may be used to measure emissions of specific radionuclides only (1) when it is known that the sample contains only a single radionuclide, or the identity and isotopic ratio of the radionuclides in the sample are well-known, and (2) measurements using either Method A–1, A–2 or A–5 have shown that this method provides a reasonably accurate measurement of the emission rate. Gross alpha measurements are applicable to unidentified mixtures of radionuclides only for the purposes and under the conditions described in section 3.7. APHA–601(3), ASTM–D–1943(10).

3.1.5 Method A–5, Chemical Determination of Uranium.

Principle: Uranium may be measured chemically by either colorimetry or fluorometry. In both procedures, the sample is dissolved, the uranium is oxidized to the hexavalent form and extracted into a suitable solvent. Impurities are removed from the solvent layer. For colorimetry, dibenzoylmethane is added, and the uranium is measured by the absorbance in a colorimeter. For fluorometry, a portion of the solution is fused with a sodium fluoride-lithium fluoride flux and the uranium is determined by the ultraviolet activated fluorescence of the fused disk in a fluorometer.

Applicability: This method is applicable to the measurements of emission rates of uranium when the isotopic ratio of the uranium radionuclides is well known. ASTM–E–318(15), ASTM–D–2907(14).

3.1.6 Method A–6, Radon-222—Continuous Gas Monitor.

Principle: Radon-222 is measured directly in a continuously extracted sample stream by passing the air stream through a calibrated scintillation cell. Prior to the scintillation cell, the air stream is treated to remove particulates and excess moisture. The alpha particles from radon-222 and its decay products strike a zinc sulfide coating on the inside of the scintillation cell producing light pulses. The light pulses are detected by a photomultiplier tube which generates electrical pulses. These pulses are processed by the system electronics and the read out is in pCi/l of radon-222.

Applicability: This method is applicable to the measurement of radon-222 in effluent streams which do not contain significant quantities of radon-220. Users of this method should calibrate the monitor in a radon calibration chamber at least twice per year. The background of the monitor should also be checked periodically by operating the instrument in a low radon environment. EPA 520/1–89–009(24).

3.1.7 Method A–7, Radon-222-Alpha Track Detectors

Principle: Radon-222 is measured directly in the effluent stream using alpha track detectors (ATD). The alpha particles emitted by radon-222 and its decay products strike a small plastic strip and produce submicron damage

tracks. The plastic strip is placed in a caustic solution that accentuates the damage tracks which are counted using a microscope or automatic counting system. The number of tracks per unit area is correlated to the radon concentration in air using a conversion factor derived from data generated in a radon calibration facility.

Applicability: Prior approval from EPA is required for use of this method. This method is only applicable to effluent streams which do not contain significant quantities of radon-220, unless special detectors are used to discriminate against radon-220. This method may be used only when ATDs have been demonstrated to produce data comparable to data obtained with Method A–6. Such data should be submitted to EPA when requesting approval for the use of this method. EPA 520/1–89–009(24).

3.2 Methods for Gaseous Beta Emitting Radionuclides.

3.2.1 Method B–1, Direct Counting in Flow-Through Ionization Chambers.

Principle: An ionization chamber containing a specific volume of gas which flows at a given flow rate through the chamber is used. The sample (effluent stream sample) acts as the counting gas for the chamber. The activity of the radionuclide is determined from the current measured in the ionization chamber.

Applicability: This method is applicable for measuring the activity of a gaseous beta-emitting radionuclide in an effluent stream that is suitable as a counting gas, when no other beta-emitting nuclides are present. DOE/EP–0096(17), NCRP–58(23).

3.2.2 Method B–2, Direct Counting With In-line or Off-line Beta Detectors.

Principle: The beta detector is placed directly in the effluent stream (in-line) or an extracted sample of the effluent stream is passed through a chamber containing a beta detector (off-line). The activities of the radionuclides present in the effluent stream are determined from the beta count rate, and a knowledge of the radionuclides present and the relationship of the gross beta count rate and the specific radionuclide concentration.

Applicability: This method is applicable only to radionuclides with maximum beta particle energies greater then 0.2 MeV. This method may be used to measure emissions of specific radionuclides only when it is known that the sample contains only a single radionuclide or the identity and isotopic ratio of the radionuclides in the effluent stream are well known. Specific radionuclide analysis of periodic grab samples may be used to identify the types and quantities of radionuclides present and to establish the relationship between specific radionuclide analyses and gross beta count rates.

This method is applicable to unidentified mixtures of gaseous radionuclides only for the purposes and under the conditions described in section 3.7.

3.3 Methods for Non-Gaseous Beta Emitting Radionuclides.

3.3.1 Method B–3, Radiochemistry-Beta Counting.

Principle: The element of interest is separated from other elements, and from the sample matrix by radiochemistry. This may involve precipitation, distillation, ion exchange, or solvent extraction. Carriers (elements chemically similar to the element of interest) may be used. The element is deposited on a planchet, and counted with a beta counter. Corrections for chemical yield, and decay (if necessary) are made. The beta count rate determines the total activity of all radionuclides of the separated element. This method may also involve the radiochemical separation and counting of a daughter element, after a suitable period of ingrowth, in which case it is specific for the parent nuclide.

Applicability: This method is applicable for measuring the activity of any beta-emitting radionuclide, with a maximum energy greater than 0.2 MeV, provided no other radionuclide is present in the separated sample. APHA–608(5).

3.3.2 Method B–4, Direct Beta Counting (Gross beta determination).

Principle: The sample, collected on a suitable filter, is counted with a beta counter. The sample must be thin enough so that self-absorption corrections can be made.

Applicability: Gross beta measurements are applicable only to radionuclides with maximum beta particle energies greater than 0.2 MeV. Gross beta measurements may be used to measure emissions of specific radionuclides only (1) when it is known that the sample contains only a single radionuclide, and (2) measurements made using Method B–3 show reasonable agreement with the gross beta measurement. Gross beta measurements are applicable to mixtures of radionuclides only for the purposes and under the conditions described in section 3.7. APHA–602(4), ASTM–D–1890(11).

3.3.3 Method B–5, Liquid Scintillation Spectrometry.

Principle: An aliquot of a collected sample or the result of some other chemical separation or processing technique is added to a liquid scintillation “cocktail” which is viewed by photomultiplier tubes in a liquid scintillation spectrometer. The spectrometer is adjusted to establish a channel or “window” for the pulse energy appropriate to the nuclide of interest. The activity of the nuclide of interest is measured by the counting rate in the appropriate energy channel. Corrections are made for chemical yield where separations are made.

Applicability: This method is applicable to any beta-emitting nuclide when no other radionuclide is present in the sample or the separated sample provided that it can be incorporated in the scintillation cocktail. This method is also applicable for samples which contain more than one radionuclide but only when the energies of the beta particles are sufficiently separated so that they can be resolved by the spectrometer. This method is most applicable to the measurement of low-energy beta emitters such as tritium and carbon-14. APHA–609(6), EML–LV–539–17(19).

3.4 Gamma Emitting Radionuclides

3.4.1 Method G–1, High Resolution Gamma Spectrometry.

Principle: The sample is counted with a high resolution gamma detector, usually either a Ge(Li) or a high purity Ge detector, connected to a multichannel analyzer or computer. The gamma emitting radionuclides in the sample are measured from the gamma count rates in the energy regions characteristic of the individual radionuclide. Corrections are made for counts contributed by other radionuclides to the spectral regions of the radionuclides of interest. Radiochemical separations may be made prior to counting but are usually not necessary.

Applicability: This method is applicable to the measurement of any gamma emitting radionuclide with gamma energies greater than 20 keV. It can be applied to complex mixtures of radionuclides. The samples counted may be in the form of particulate filters, absorbers, liquids or gases. The method may also be applied to the analysis of gaseous gamma emitting radionuclides directly in an effluent stream by passing the stream through a chamber or cell containing the detector. ASTM–3649(9), IDO–12096(18).

3.4.2 Method G–2, Low Resolution Gamma Spectrometry.

Principle: The sample is counted with a low resolution gamma detector, a thallium activated sodium iodide crystal. The detector is coupled to a photomultiplier tube and connected to a multichannel analyzer. The gamma emitting radionuclides in the sample are measured from the gamma count rates in the energy regions characteristic of the individual radionuclides. Corrections are made for counts contributed by other radionuclides to the spectral regions of the radionuclides of interest. Radiochemical separation may be used prior to counting to obtain less complex gamma spectra if needed.

Applicability: This method is applicable to the measurement of gamma emitting radionuclides with energies greater than 100 keV. It can be applied only to relatively simple mixtures of gamma emitting radionuclides. The samples counted may be in the form of particulate filters, absorbers, liquids or gas. The method can be applied to the analysis of gaseous radionuclides directly in an effluent stream by passing the gas stream through a chamber or cell containing the detector. ASTM–D–2459(12), EMSL–LV–0539–17(19).

3.4.3 Method G–3, Single Channel Gamma Spectrometry.

Principle: The sample is counted with a thallium activated sodium iodide crystal. The detector is coupled to a photomultiplier tube connected to a single channel analyzer. The activity of a gamma emitting radionuclide is determined from the gamma counts in the energy range for which the counter is set.

Applicability: This method is applicable to the measurement of a single gamma emitting radionuclide. It is not applicable to mixtures of radionuclides. The samples counted may be in the form of particulate filters, absorbers, liquids or gas. The method can be applied to the analysis of gaseous radionuclides directly in an effluent stream by passing the gas stream through a chamber or cell containing the detector.

3.4.4 Method G–4, Gross Gamma Counting.

Principle: The sample is counted with a gamma detector usually a thallium activated sodium iodine crystal. The detector is coupled to a photomultiplier tube and gamma rays above a specific threshold energy level are counted.

Applicability: Gross gamma measurements may be used to measure emissions of specific radionuclides only when it is known that the sample contains a single radionuclide or the identity and isotopic ratio of the radionuclides in the effluent stream are well known. When gross gamma measurements are used to determine emissions of specific radionuclides periodic measurements using Methods G–1 or G–2 should be made to demonstrate that the gross gamma measurements provide reliable emission data. This method may be applied to analysis of gaseous radionuclides directly in an effluent stream by placing the detector directly in or adjacent to the effluent stream or passing an extracted sample of the effluent stream through a chamber or cell containing the detector.

3.5 Counting Methods. All of the above methods with the exception of Method A–5 involve counting the radiation emitted by the radionuclide. Counting methods applicable to the measurement of alpha, beta and gamma radiations are listed below. The equipment needed and the counting principles involved are described in detail in ASTM–3648(8).

3.5.1 Alpha Counting:

• *Gas Flow Proportional Counters.* The alpha particles cause ionization in the counting gas and the resulting electrical pulses are counted. These counters may be windowless or have very thin windows.

• *Scintillation Counters.* The alpha particles transfer energy to a scintillator resulting in a production of light photons which strike a photomultiplier tube converting the light photons to electrical pulses which are counted. The counters may involve the use of solid scintillation materials such as zinc sulfide or liquid scintillation solutions.

• *Solid-State Counters.* Semiconductor materials, such as silicon surface-barrier p-n junctions, act as solid ionization chambers. The alpha particles interact which the detector producing electron hole pairs. The charged pair is collected by an applied electrical field and the resulting electrical pulses are counted.

• *Alpha Spectrometers.* Semiconductor detectors used in conjunction with multichannel analyzers for energy discrimination.

3.5.2 Beta Counting:

• *Ionization Chambers.* These chambers contain the beta-emitting nuclide in gaseous form. The ionization current produced is measured.

• *Geiger-Muller (GM) Counters-or Gas Flow Proportional Counters.* The beta particles cause ionization in the counting gas and the resulting electrical pulses are counted. Proportional gas flow counters which are heavily shielded by lead or other metal, and provided with an anti-coincidence shield to reject cosmic rays, are called low background beta counters.

• *Scintillation Counters.* The beta particles transfer energy to a scintillator resulting in a production of light photons, which strike a photomultiplier tube converting the light photon to electrical pulses which are counted. This may involve the use of anthracene crystals, plastic scintillator, or liquid scintillation solutions with organic phosphors.

• *Liquid Scintillation Spectrometers.* Liquid scintillation counters which use two photomultiplier tubes in coincidence to reduce background counts. This counter may also electronically discriminate among pulses of a given range of energy.

3.5.3 Gamma Counting:

• *Low-Resolution Gamma Spectrometers.* The gamma rays interact with thallium activated sodium iodide or cesium iodide crystal resulting in the release of light photons which strike a photomultiplier tube converting the light pulses to electrical pulses proportional to the energy of the gamma ray. Multi-channel analyzers are used to separate and store the pulses according to the energy absorbed in the crystal.

• *High-Resolution gamma Spectrometers.* Gamma rays interact with a lithium-drifted (Ge(Li)) or high-purity germanium (HPGe) semiconductor detectors resulting in a production of electron-hole pairs. The charged pair is collected by an applied electrical field. A very stable low noise preamplifier amplifies the pulses of electrical charge resulting from the gamma photon interactions. Multichannel analyzers or computers are used to separate and store the pulses according to the energy absorbed in the crystal.

• *Single Channel Analyzers.* Thallium activated sodium iodide crystals used with a single window analyzer. Pulses from the photomultiplier tubes are separated in a single predetermined energy range.

3.5.4 Calibration of Counters. Counters are calibrated for specific radionuclide measurements using a standard of the radionuclide under either identical or very similar conditions as the sample to be counted. For gamma spectrometers a series of standards covering the energy range of interest may be used to construct a calibration curve relating gamma energy to counting efficiency.

In those cases where a standard is not available for a radionuclide, counters may be calibrated using a standard with energy characteristics as similar as possible to the radionuclide to be measured. For gross alpha and beta measurements of the unidentified mixtures of radionuclides, alpha counters are calibrated with a natural uranium standard and beta counters with a cesium-137 standard. The standard must contain the same weight and distribution of solids as the samples, and be mounted in an identical manner. If the samples contain variable amounts of solids, calibration curves relating weight of solids present to counting efficiency are prepared. Standards other than those prescribed may be used provided it can be shown that such standards are more applicable to the radionuclide mixture measured.

3.6 Radiochemical Methods for Selected Radionuclides. Methods for a selected list of radionuclides are listed in Table 1. The radionuclides listed are those which are most commonly used and which have the greatest potential for causing doses to members of the public. For radionuclides not listed in Table 1, methods based on any of the applicable “principles of measurement” described in section 3.1 through 3.4 may be used.

3.7 Applicability of Gross Alpha and Beta Measurements to Unidentified Mixtures of Radionuclides. Gross alpha and beta measurements may be used as a screening measurement as a part of an emission measurement program to identify the need to do specific radionuclide analyses or to confirm or verify that unexpected radionuclides are not being released in significant quantities.

Gross alpha (Method A–4) or gross beta (Methods B–2 or B–4) measurements may also be used for the purpose of comparing the measured concentrations in the effluent stream with the limiting “Concentration Levels for Environmental Compliance” in table 2 of appendix E. For unidentified mixtures, the measured concentration value shall be compared with the lowest environmental concentration limit for any radionuclide which is not known to be absent from the effluent stream.

Table 1—List of Approved Methods for Specific Radionuclides

Radionuclide	Approved methods of analysis
Am-241	A–1, A–2, A–3, A–4
Ar-41	B–1,B–2,G–1,G–2, G–3, G–4
Ba-140	G–1, G–2, G–3, G–4
Br-82	G–1, G–2, G–3, G–4

C-11	B–1,B–2,G–1,G–2,G–3, G–4
C-14	B–5
Ca-45	B–3, B–4, B–5
Ce-144	G–1, G–2, G–3, G–4
Cm-244	A–1, A–2, A–3, A–4
Co-60	G–1, G–2, G–3, G–4
Cr-51	G–1, G–2, G–3, G–4
Cs-134	G–1, G–2, G–3, G–4
Cs-137	G–1, G–2, G–3, G–4
Fe-55	B–5, G–1
Fe-59	G–1, G–2, G–3, G–4
Ga-67	G–1, G–2, G–3, G–4
H-3 (H_2O)	B–5
H-3 (gas)	B–1
I-123	G–1, G–2, G–3, G–4
I-125	G–1
I-131	G–1, G–2, G–3, G–4
In-113m	G–1, G–2, G–3, G–4
Ir-192	G–1, G–2, G–3, G–4
Kr-85	B–1, B–2, B–5, G–1, G–2, G–3, G–4
Kr-87	B–1, B–2, G–1, G–2, G–3, G–4
Kr-88	B–1, B–2, G–1, G–2, G–3, G–4
Mn-54	G–1, G–2, G–3, G–4
Mo-99	G–1, G–2, G–3, G–4
N-13	B–1, B–2, G–1, G–2, G–3, G–4
O-15	B–1, B–2, G–1, G–2, G–3, G–4
P-32	B–3, B–4, B–5
Pm-147	B–3, B–4, B–5
Po-210	A–1, A–2, A–3, A–4
Pu-238	A–1, A–2, A–3, A–4

Pu-239	A–1, A–2, A–3, A–4
Pu-240	A–1, A–2, A–3, A–4
Ra–226	A–1, A–2, G–1, G–2
S-35	B–5
Se-75	G–1, G–2, G–3, G–4
Sr-90	B–3, B–4, B–5
Tc-99	B–3, B–4, B–5
Te-201	G–1, G–2, G–3, G–4
Uranium (total alpha)	A–1, A–2, A–3, A–4
Uranium (Isotopic)	A–1, A–3
Uranium (Natural)	A–5
Xe-133	G–1
Yb-169	G–1, G–2, G–3, G–4
Zn-65	G–1, G–2, G–3, G–4

4. *Quality Assurance Methods*

Each facility required to measure their radionuclide emissions shall conduct a quality assurance program in conjunction with the radionuclide emission measurements. This program shall assure that the emission measurements are representative, and are of known precision and accuracy and shall include administrative controls to assure prompt response when emission measurements indicate unexpectedly large emissions. The program shall consist of a system of policies, organizational responsibilities, written procedures, data quality specifications, audits, corrective actions and reports. This quality assurance program shall include the following program elements:

4.1 The organizational structure, functional responsibilities, levels of authority and lines of communications for all activities related to the emissions measurement program shall be identified and documented.

4.2 Administrative controls shall be prescribed to ensure prompt response in the event that emission levels increase due to unplanned operations.

4.3 The sample collection and analysis procedures used in measuring the emissions shall be described including where applicable:

4.3.1 Identification of sampling sites and number of sampling points, including the rationale for site selections.

4.3.2 A description of sampling probes and representativeness of the samples.

4.3.3 A description of any continuous monitoring system used to measure emissions, including the sensitivity of the system, calibration procedures and frequency of calibration.

4.3.4 A description of the sample collection systems for each radionuclide measured, including frequency of collection, calibration procedures and frequency of calibration.

4.3.5 A description of the laboratory analysis procedures used for each radionuclide measured, including frequency of analysis, calibration procedures and frequency of calibration.

4.3.6 A description of the sample flow rate measurement systems or procedures, including calibration procedures and frequency of calibration.

4.3.7 A description of the effluent flow rate measurement procedures, including frequency of measurements, calibration procedures and frequency of calibration.

4.4 The objectives of the quality assurance program shall be documented and shall state the required precision, accuracy and completeness of the emission measurement data including a description of the procedures used to assess these parameters. Accuracy is the degree of agreement of a measurement with a true or known value. Precision is a measure of the agreement among individual measurements of the same parameters under similar conditions. Completeness is a measure of the amount of valid data obtained compared to the amount expected under normal conditions.

4.5 A quality control program shall be established to evaluate and track the quality of the emissions measurement data against preset criteria. The program should include where applicable a system of replicates, spiked samples, split samples, blanks and control charts. The number and frequency of such quality control checks shall be identified.

4.6 A sample tracking system shall be established to provide for positive identification of samples and data through all phases of the sample collection, analysis and reporting system. Sample handling and preservation procedures shall be established to maintain the integrity of samples during collection, storage and analysis.

4.7 Regular maintenance, calibration and field checks shall be performed for each sampling system in use by satisfying the requirements found in Table 2: Maintenance, Calibration and Field Check Requirements.

Table 2—Maintenance, Calibration and Field Check Requirements

Sampling system components	Frequency of activity
Cleaning of thermal anemometer elements	As required by application.
Inspect pitot tubes for contaminant deposits	At least annually.
Inspect pitot tube systems for leaks	At least annually.
Inspect sharp-edged nozzles for damage	At least annually or after maintenance that could cause damage.
Check nozzles for alignment, presence of deposits, or other potentially degrading factors	Annually.
Check transport lines of HEPA-filtered applications to determine if cleaning is required	Annually.
Clean transport lines	Visible deposits for HEPA-filtered applications. Mean mass of deposited material exceeds $1 g/m^2$ for other applications.
Inspect or test the sample transport system for leaks	At least annually.

Check mass flow meters of sampling systems with a secondary or transfer standard	At least quarterly.
Inspect rotameters of sampling systems for presence of foreign matter	At the start of each sampling period.
Check response of stack flow rate systems	At least quarterly.
Calibration of flow meters of sampling systems	At least annually.
Calibration of effluent flow measurement devices	At least annually.
Calibration of timing devices	At least annually.

4.8 Periodic internal and external audits shall be performed to monitor compliance with the quality assurance program. These audits shall be performed in accordance with written procedures and conducted by personnel who do not have responsibility for performing any of the operations being audited.

4.9 A corrective action program shall be established including criteria for when corrective action is needed, what corrective actions will be taken and who is responsible for taking the corrective action.

4.10 Periodic reports to responsible management shall be prepared on the performance of the emissions measurements program. These reports should include assessment of the quality of the data, results of audits and description of corrective actions.

4.11 The quality assurance program should be documented in a quality assurance project plan that should address each of the above requirements.

5. *References*

(1) American National Standards Institute “Guide to Sampling Airborne Radioactive Materials in Nuclear Facilities”, ANSI–N13.1–1969, American National Standards Institute, New York, New York (1969).

(2) American Public Health Association, “Methods of Air Sampling”, 2nd Edition, Method 605, “Tentative Method of Analysis for Plutonium Content of Atmospheric Particulate Matter”. American Public Health Association, New York, NY (1977).

(3) Ibid, Method 601, “Tentative Method of Analysis for Gross Alpha Radioactivity Content of the Atmosphere”.

(4) Ibid, Method 602, “Tentative Method of the Analysis for Gross Beta Radioactivity Content of the Atmosphere”.

(5) Ibid, Method 608, “Tentative Method of Analysis for Strontium-90 Content of Atmospheric Particulate Matter”.

(6) Ibid, Method 609, “Tentative Method of Analysis for Tritium Content of the Atmosphere”.

(7) Ibid, Method 603, “Tentative Method of Analysis for Iodine-131 Content of the Atmosphere”.

(8) American Society for Testing and Materials, 1986 Annual Book ASTM Standards, Designation D–3648–78, “Standard Practices for the Measurement of Radioactivity”. American Society for Testing and Materials, Philadelphia, PA (1986).

(9) Ibid, Designation D–3649–85, “Standard Practice for High Resolution Gamma Spectrometry”.

(10) Ibid, Designation D–1943–81, “Standard Test Method for Alpha Particle Radioactivity of Water”.

(11) Ibid, Designation D–1890–81, “Standard Test Method for Beta Particle Radioactivity of Water”.

(12) Ibid, Designation D–2459–72, “Standard Test Method for Gamma Spectrometry of Water”.

(13) Ibid, Designation D–3972–82, “Standard Test Method for Isotopic Uranium in Water by Radiochemistry”.

(14) Ibid, Designation D–2907–83, “Standard Test Methods for Microquantities of Uranium in Water by Fluorometry”.

(15) Ibid, Designation E–318, “Standard Test Method for Uranium in Aqueous Solutions by Colorimetry”.

(16) Ibid, Designation D–3084–75, “Standard Practice for Alpha Spectrometry of Water”.

(17) Corley, J.P. and C.D. Corbit, “A Guide for Effluent Radiological Measurements at DOE Installations”, DOE/EP–0096, Pacific Northwest Laboratories, Richland, Washington (1983).

(18) Department of Energy, “RESL Analytical Chemistry Branch Procedures Manual”, IDO–12096, U.S. Department of Energy, Idaho Falls, Idaho (1982).

(19) Environmental Protection Agency, “Radiochemical Analytical Procedures for Analysis of Environmental Samples”, EMSL–LV–0539–17, U.S. Environmental Protection Agency, Environmental Monitoring and Support Laboratory, Las Vegas, Nevada (1979).

(20) Environmental Protection Agency, “Radiochemistry Procedures Manual”, EPA 520/5–84–006, Eastern Environmental Radiation Facility, Montgomery, Alabama (1984).

(21) National Council on Radiation Protection and Measurements, NCRP Report No. 50, “Environmental Radiation Measurements”, National Council on Radiation Protection and Measurement, Bethesda, Maryland (1976).

(22) Ibid, Report No. 47, “Tritium Measurement Techniques”. (1976).

(23) Ibid, Report No. 58 “A Handbook of Radioactivity Measurement Procedures” (1985).

(24) Environmental Protection Agency, “Indoor Radon and Radon Decay Product Measurement Protocols”, EPA 520/1–89–009, U.S. Environmental Protection Agency, Washington, DC (1989).

Method 115—Monitoring for Radon-222 Emissions

This appendix describes the monitoring methods which must be used in determining the radon-222 emissions from underground uranium mines, uranium mill tailings piles, phosphogypsum stacks, and other piles of waste material emitting radon.

1. *Radon-222 Emissions from Underground Uranium Mine Vents*

1.1 Sampling Frequency and Calculation of Emissions. Radon-222 emissions from underground uranium mine vents shall be determined using one of the following methods:

1.1.1 Continuous Measurement. These measurements shall be made and the emissions calculated as follows:

(a) The radon-222 concentration shall be continuously measured at each mine vent whenever the mine ventilation system is operational.

(b) Each mine vent exhaust flow rate shall be measured at least 4 times per year.

(c) A weekly radon-222 emission rate for the mine shall be calculated and recorded weekly as follows:

$A_w = C_1Q_1T_1 + C_2Q_2T_2 + \ldots C_iQ_iT_i$

Where:

A_w=Total radon-222 emitted from the mine during week (Ci)

C_i=Average radon-222 concentration in mine vent i(Ci/m^3)

Q_i=Volumetric flow rate from mine vent i(m^3 /hr)

T_i=Hours of mine ventilation system operation during week for mine vent i(hr)

(d) The annual radon-222 emission rate is the sum of the weekly emission rates during a calendar year.

1.1.2 Periodic Measurement. This method is applicable only to mines that continuously operate their ventilation system except for extended shutdowns. Mines which start up and shut down their ventilation system frequently must use the continuous measurement method describe in Section 1.1.1 above. Emission rates determined using periodic measurements shall be measured and calculated as follows:

(a) The radon-222 shall be continuously measured at each mine vent for at least one week every three months.

(b) Each mine vent exhaust flow rate shall be measured at least once during each of the radon-222 measurement periods.

(c) A weekly radon-222 emission rate shall be calculated for each weekly period according to the method described in Section 1.1.1. In this calculation T=168 hr.

(d) The annual radon-222 emission rate from the mine should be calculated as follows:

$$A_y = \frac{52 - W_s}{n} \left(A_{w1} + A_{w2} + \cdots A_{wi} \right)$$

Where:

A_y=Annual radon-222 emission rate from the mine(Ci)

A_{wi}=Weekly radon-222 emission rate during the measurement period i (Ci)

n=Number of weekly measurement periods per year

W_s=Number of weeks during the year that the mine ventilation system is shut down in excess of 7 consecutive days, i.e. the sum of the number of weeks each shut down exceeds 7 days

1.2 Test Methods and Procedures

Each underground mine required to test its emissions, unless an equivalent or alternative method has been approved by the Administrator, shall use the following test methods:

1.2.1 Test Method 1 of appendix A to part 60 shall be used to determine velocity traverses. The sampling point in the duct shall be either the centroid of the cross section or the point of average velocity.

1.2.2 Test Method 2 of appendix A to part 60 shall be used to determine velocity and volumetric flow rates.

1.2.3 Test Methods A–6 or A–7 of appendix B, Method 114 to part 61 shall be used for the analysis of radon–222. Use of Method A–7 requires prior approval of EPA based on conditions described in appendix B.

1.2.4 A quality assurance program shall be conducted in conformance with the programs described for Continuous Radon Monitors and Alpha Track Detectors in EPA 520/1–89–009. (2)

2. *Radon–222 Emissions from Uranium Mill Tailings Piles*

2.1 Measurement and Calculation of Radon Flux from Uranium Mill Tailings Piles.

2.1.1 Frequency of Flux Measurement. A single set of radon flux measurements may be made, or if the owner or operator chooses, more frequent measurements may be made over a one year period. These measurements may involve quarterly, monthly or weekly intervals. All radon measurements shall be made as described in paragraphs 2.1.2 through 2.1.6 except that for measurements made over a one year period, the requirement of paragraph 2.1.4(c) shall not apply. The mean radon flux from the pile shall be the arithmetic mean of the mean radon flux for each measurement period. The weather conditions, moisture content of the tailings and area of the pile covered by water existing at the time of the measurement shall be chosen so as to provide measurements representative of the long term radon flux from the pile and shall be subject to EPA review and approval.

2.1.2 Distribution of Flux Measurements. The distribution and number of radon flux measurements required on a pile will depend on clearly defined areas of the pile (called regions) that can have significantly different radon fluxes due to surface conditions. The mean radon flux shall be determined for each individual region of the pile. Regions that shall be considered for operating mill tailings piles are:

(a) Water covered areas,

(b) Water saturated areas (beaches),

(c) Dry top surface areas, and

(d) Sides, except where earthen material is used in dam construction.

For mill tailings after disposal the pile shall be considered to consist of only one region.

2.1.3 Number of Flux Measurements. Radon flux measurements shall be made within each region on the pile, except for those areas covered with water. Measurements shall be made at regularly spaced locations across the surface of the region, realizing that surface roughness will prohibit measurements in some areas of a region. The minimum number of flux measurements considered necessary to determine a representative mean radon flux value for each type of region on an operating pile is:

(a) Water covered area—no measurements required as radon flux is assumed to be zero,

(b) Water saturated beaches—100 radon flux measurements,

(c) Loose and dry top surface—100 radon flux measurements,

(d) Sides—100 radon flux measurements, except where earthern material is used in dam construction.

For a mill tailings pile after disposal which consists of only one region a minimum of 100 measurements are required.

2.1.4 Restrictions to Radon Flux Measurements. The following restrictions are placed on making radon flux measurements:

(a) Measurements shall not be initiated within 24 hours of a rainfall.

(b) If a rainfall occurs during the 24 hour measurements period, the measurement is invalid if the seal around the lip of the collector has washed away or if the collector is surrounded by water.

(c) Measurements shall not be performed if the ambient temperature is below 35 °F or if the ground is frozen.

2.1.5 Areas of Pile Regions. The approximate area of each region of the pile shall be determined in units of square meters.

2.1.6 Radon Flux Measurement. Measuring radon flux involves the adsorption of radon on activated charcoal in a large-area collector. The radon collector is placed on the surface of the pile area to be measured and allowed to collect radon for a time period of 24 hours. The radon collected on the charcoal is measured by gamma-ray spectroscopy. The detailed measurement procedure provided in appendix A of EPA 520/5–85–0029(1) shall be used to measure the radon flux on uranium mill tailings, except the surface of the tailings shall not be penetrated by the lip of the radon collector as directed in the procedure, rather the collector shall be carefully positioned on a flat surface with soil or tailings used to seal the edge.

2.1.7 Calculations. The mean radon flux for each region of the pile and for the total pile shall be calculated and reported as follows:

(a) The individual radon flux calculations shall be made as provided in appendix A EPA 86 (1). The mean radon flux for each region of the pile shall be calculated by summing all individual flux measurements for the region and dividing by the total number of flux measurements for the region.

(b) The mean radon flux for the total uranium mill tailings pile shall be calculated as follows.

$$J_s = \frac{J_1 A_1 + \cdots J_2 A_2 \cdots J_i A_i}{A_t}$$

Where:

J_s=Mean flux for the total pile (pCi/m^2 -s)

J_i=Mean flux measured in region i (pCi/m^2 -s)

A_i=Area of region i (m^2)

A_t=Total area of the pile (m^2)

2.1.8 Reporting. The results of individual flux measurements, the approximate locations on the pile, and the mean radon flux for each region and the mean radon flux for the total stack shall be included in the emission test report. Any condition or unusual event that occurred during the measurements that could significantly affect the results should be reported.

3.0 Radon-222 Emissions from Phosphogypsum Stacks.

3.1 Measurement and Calculation of the Mean Radon Flux. Radon flux measurements shall be made on phosphogypsum stacks as described below:

3.1.1 Frequency of Measurements. A single set of radon flux measurements may be made after the phosphogypsum stack becomes inactive, or if the owner or operator chooses, more frequent measurements may be made over a one

year period. These measurements may involve quarterly, monthly or weekly intervals. All radon measurements shall be made as described in paragraphs 3.1.2 through 3.1.6 except that for measurements made over a one year period, the requirement of paragraph 3.1.4(c) shall not apply. For measurements made over a one year period, the radon flux shall be the arithmetic mean of the mean radon flux for each measurement period.

3.1.2 Distribution and Number of Flux Measurements. The distribution and number of radon flux measurements required on a stack will depend on clearly defined areas of the stack (called regions) that can have significantly different radon fluxes due to surface conditions. The mean radon flux shall be determined for each individual region of the stack. Regions that shall be considered are:

(a) Water covered areas,

(b) Water saturated areas (beaches),

(c) Loose and dry top surface areas,

(d) Hard-packed roadways, and

(e) Sides.

3.1.3 Number of Flux Measurements. Radon flux measurements shall be made within each region on the phosphogypsum stack, except for those areas covered with water. Measurements shall be made at regularly spaced locations across the surface of the region, realizing that surface roughness will prohibit measurements in some areas of a region. The minimum number of flux measurements considered necessary to determine a representative mean radon flux value for each type of region is:

(a) Water covered area—no measurements required as radon flux is assumed to be zero,

(b) Water saturated beaches—50 radon flux measurements,

(c) Loose and dry top surface—100 radon flux measurements,

(d) Hard-packed roadways—50 radon flux measurements, and

(e) Sides—100 radon flux measurements.

A minimum of 300 measurements are required. A stack that has no water cover can be considered to consist of two regions, top and sides, and will require a minimum of only 200 measurements.

3.1.4 Restrictions to Radon Flux Measurements. The following restrictions are placed on making radon flux measurements:

(a) Measurements shall not be initiated within 24 hours of a rainfall.

(b) If a rainfall occurs during the 24 hour measurement period, the measurement is invalid if the seal around the lip of the collector has washed away or if the collector is surrounded by water.

(c) Measurements shall not be performed if the ambient temperature is below 35 °F or if the ground is frozen.

3.1.5 Areas of Stack Regions. The approximate area of each region of the stack shall be determined in units of square meters.

3.1.6 Radon Flux Measurements. Measuring radon flux involves the adsorption of radon on activated charcoal in a large-area collector. The radon collector is placed on the surface of the stack area to be measured and allowed to collect radon for a time period of 24 hours. The radon collected on the charcoal is measured by gamma-ray

spectroscopy. The detailed measurement procedure provided in appendix A of EPA 520/5–85–0029(1) shall be used to measure the radon flux on phosphogypsum stacks, except the surface of the phosphogypsum shall not be penetrated by the lip of the radon collector as directed in the procedure, rather the collector shall be carefully positioned on a flat surface with soil or phosphogypsum used to seal the edge.

3.1.7 Calculations. The mean radon flux for each region of the phosphogypsum stack and for the total stack shall be calculated and reported as follows:

(a) The individual radon flux calculations shall be made as provided in appendix A EPA 86 (1). The mean radon flux for each region of the stack shall be calculated by summing all individual flux measurements for the region and dividing by the total number of flux measurements for the region.

(b) The mean radon flux for the total phosphogypsum stack shall be calculated as follows.

$$J_s = \frac{J_1 A_1 + J_2 A_2 + \cdots J_i A_i}{A_t}$$

Where:

J_s=Mean flux for the total stack (pCi/m^2 -s)

J_i=Mean flux measured in region i (pCi/m^2 -s)

A_i=Area of region i (m^2)

A_t=Total area of the stack

3.1.8 Reporting. The results of individual flux measurements, the approximate locations on the stack, and the mean radon flux for each region and the mean radon flux for the total stack shall be included in the emission test report. Any condition or unusual event that occurred during the measurements that could significantly affect the results should be reported.

4.0 Quality Assurance Procedures for Measuring Rn–222 Flux

A. Sampling Procedures

Records of field activities and laboratory measurements shall be maintained. The following information shall be recorded for each charcoal canister measurement:

(a) Site

(b) Name of pile

(c) Sample location

(d) Sample ID number

(e) Date and time on

(f) Date and time off

(g) Observations of meteorological conditions and comments

Records shall include all applicable information associated with determining the sample measurement, calculations, observations, and comments.

B. Sample Custody

Custodial control of all charcoal samples exposed in the field shall be maintained in accordance with EPA chain-of-custody field procedures. A control record shall document all custody changes that occur between the field and laboratory personnel.

C. Calibration Procedures and Frequency

The radioactivity of two standard charcoal sources, each containing a carefully determined quantity of radium-226 uniformly distributed through 180g of activated charcoal, shall be measured. An efficiency factor is computed by dividing the average measured radioactivity of the two standard charcoal sources, minus the background, in cpm by the known radioactivity of the charcoal sources in dpm. The same two standard charcoal sources shall be counted at the beginning and at the end of each day's counting as a check of the radioactivity counting equipment. A background count using unexposed charcoal should also be made at the beginning and at the end of each counting day to check for inadvertent contamination of the detector or other changes affecting the background. The unexposed charcoal comprising the blank is changed with each new batch of charcoal used.

D. Internal Quality Control Checks and Frequency

The charcoal from every tenth exposed canister shall be recounted. Five percent of the samples analyzed shall be either blanks (charcoal having no radioactivity added) or samples spiked with known quantities of radium-226.

E. Data Precision, Accuracy, and Completeness

The precision, accuracy, and completeness of measurements and analyses shall be within the following limits for samples measuring greater than 1.0 pCi/m^2 −s.

(a) Precision: 10%

(b) Accuracy: ±10%

(c) Completeness: at least 85% of the measurements must yield useable results.

5.0 References

(1) Hartley, J.N. and Freeman, H.D., “Radon Flux Measurements on Gardinier and Royster phosphogypsum Piles Near Tampa and Mulberry, Florida,” U.S. Environmental Protection Agency Report, EPA 520/5–85–029, January 1986.

(2) Environmental Protection Agency, “Indoor Radon and Radon Decay Product Measurement Protocols”, EPA 520/1–89–009, U.S. Environmental Protection Agency, Washington, DC. (1989).

[38 FR 8826, Apr. 6, 1973]

Editorial Notes: 1. For Federal Register citations to appendix B see the List of CFR Sections Affected, which appears in the Finding Aids section of the printed volume and at www.fdsys.gov.

2. At 65 FR 62161, Oct. 17, 2000, appendix B to part 61 was amended by revising Methods 101, 101A, 102, 103, 104, 105, 106, 107, 107A, 108, 108A, 108B, 108C, and 111. However, because the amendment contains no revised text for Method 107A, this part of the revision could not be incorporated.

Appendix C to Part 61—Quality Assurance Procedures

Procedure 1—Determination of Adequate Chromatographic Peak Resolution

In this method of dealing with resolution, the extent to which one chromatographic peak overlaps another is determined.

For convenience, consider the range of the elution curve of each compound as running from −2σ to +2σ. This range is used in other resolution criteria, and it contains 95.45 percent of the area of a normal curve. If two peaks are separated by a known distance, b, one can determine the fraction of the area of one curve that lies within the range of the other. The extent to which the elution curve of a contaminant compound overlaps the curve of a compound that is under analysis is found by integrating the contaminant curve over the limits $b-2\sigma_s$ to $b+2\sigma_s$, where σ_s is the standard deviation of the sample curve.

This calculation can be simplified in several ways. Overlap can be determined for curves of unit area; then actual areas can be introduced. Desired integration can be resolved into two integrals of the normal distribution function for which there are convenient calculation programs and tables. An example would be Program 15 in Texas Instruments Program Manual ST1, 1975, Texas Instruments, Inc., Dallas, Texas 75222.

$$\frac{1}{\sqrt{2\pi}\sigma_c}\int_{b-2\sigma_s}^{b+2\sigma_s} e^{\left(\frac{-t^2}{2\sigma_c}\right)}dt = \frac{1}{\sqrt{2\pi}}\int_{\frac{b-2\sigma_s}{\sigma_c}}^{\infty} e^{\left(\frac{-x^2}{2}\right)}dx - \frac{1}{\sqrt{2\pi}}\int_{\frac{b+2\sigma_s}{\sigma_c}}^{\infty} e^{\left(\frac{-x^2}{2}\right)}dx$$

The following calculation steps are required:*

1. $2\sigma_s = t_s/\sqrt{2 \ln 2}$
2. $\sigma_c = t_c/2\sqrt{2 \ln 2}$
3. $x_1 = (b-2\sigma_s)/\sigma_c$
4. $x_2 = (b+2\sigma_s)/\sigma_c$
5. $Q(x_1) = \frac{1}{\sqrt{2\pi}}\int_{x_1}^{\infty} e^{\left(\frac{-x^2}{2}\right)}dx$
6. $Q(x_2) = \frac{1}{\sqrt{2\pi}}\int_{x_2}^{\infty} e^{\left(\frac{-x^2}{2}\right)}dx$
7. $I_o = Q(x_1) - Q(x_2)$
8. $A_o = I_o A_c/A_s$
9. Percentage overlap = $A_o \times 100$,

where:

A_s = Area of the sample peak of interest determined by electronic integration or by the formula $A_s = H_s t_s$

A_c = Area of the contaminant peak, determined in the same manner as A_s.

b = Distance on the chromatographic chart that separates the maxima of the two peaks.

H_s = Peak height of the sample compound of interest, measured from the average value of the baseline to the maximum of the curve.

t_s = Width of sample peak of interest at 1/2 peak height.

t_c = Width of the contaminant peak at 1/2 of peak height.

σ_s = Standard deviation of the sample compound of interest elution curve.

σ_c = Standard deviation of the contaminant elution curve.

$Q(x_1)$ = Integral of the normal distribution function from x_1 to infinity.

$Q(x_2)$ = Integral of the normal distribution function from x_2 to infinity.

I_o = Overlap integral.

A_o = Area overlap fraction.

*In most instances, $Q(x_2)$ is very small and may be neglected

View or download PDF

In judging the suitability of alternate GC columns or the effects of altering chromatographic conditions, one can employ the area overlap as the resolution parameter with a specific maximum permissible value.

The use of Gaussian functions to describe chromatographic elution curves is widespread. However, some elution curves are highly asymmetric. In cases where the sample peak is followed by a contaminant that has a leading edge that rises sharply but the curve then tails off, it may be possible to define an effective width for $t_c$as "twice the distance from the leading edge to a perpendicular line through the maxim of the contaminant curve, measured along a perpendicular bisection of that line."

Procedure 2—Procedure for Field Auditing GC Analysis

Responsibilities of audit supervisor and analyst at the source sampling site include the following:

A. The audit supervisor verifies that audit cylinders are stored in a safe location both before and after the audit to prevent vandalism.

B. At the beginning and conclusion of the audit, the analyst records each cylinder number and pressure. An audit cylinder is never analyzed when the pressure drops below 200 psi.

C. During the audit, the analyst performs a minimum of two consecutive analyses of each audit cylinder gas. The audit must be conducted to coincide with the analysis of source test samples, normally immediately after GC calibration and prior to sample analyses.

D. At the end of audit analyses, the audit supervisor requests the calculated concentrations from the analyst and compares the results with the actual audit concentrations. If each measured concentration agrees with the respective actual concentration within ±10 percent, he directs the analyst to begin analyzing source samples. Audit supervisor judgment and/or supervisory policy determine action when agreement is not within ±10 percent. When a consistent bias in excess of 10 percent is found, it may be possible to proceed with the sample analysis, with a corrective factor to be applied to the results at a later time. However, every attempt should be made to locate the cause of the discrepancy, as it may be misleading. The audit supervisor records each cylinder number, cylinder pressure (at the end of the audit), and all calculated concentrations. The individual being audited must not under any circumstance be told actual audit concentrations until calculated concentrations have been submitted to the audit supervisor.

Field Audit Report

Part A— To be filled out by organization supplying audit cylinders.

1. Organization supplying audit sample(s) and shipping address

_____

2. Audit supervisor, organization, and phone number

_____
_____

3. Shipping instructions: Name, Address, Attention

_____
_____
_____

4. Guaranteed arrival date for cylinders_____
5. Planned shipping date for cylinders_____

6. Details on audit cylinders from last analysis

	Low conc.	High conc.
a. Date of last analysis		

b. Cylinder number		
c. Cylinder pressure, psi		
d. Audit gas(es)/balance gas		
e. Audit gas(es), ppm		
f. Cylinder construction		

Part B —To be filled out by audit supervisor.

1. Process sampled_____
_____
2. Audit location_____
_____
3. Name of individual audit_____
4. Audit date_____

5. Audit results:

	Low conc. cylinder	**High conc. cylinder**
a. Cylinder number		
b. Cylinder pressure before audit, psi		
c. Cylinder pressure after audit, psi		
d. Measured concentration, ppm Injection #1* Injection #2* Average		
e. Actual audit concentration, ppm (Part A, 6e)		
f. Audit accuracy:[1]		
Low Conc. Cylinder		
High Conc. Cylinder		
Percent[1]accuracy=		
Measured Conc.−Actual Conc.		
_____ ×100		
Actual Conc.		
g. Problems detected (if any)		

[1]Results of two consecutive injections that meet the sample analysis criteria of the test method.

[47 FR 39178, Sept. 7, 1982]

Appendix D to Part 61—Methods for Estimating Radionuclide Emissions

1. Purpose and Background

Facility owners or operators may estimate radionuclide emissions to the atmosphere for dose calculations instead of measuring emissions. Particulate emissions from mill tailings piles should be estimated using the procedures listed in reference re #2. All other emissions may be estimated by using the "Procedures" listed below, or using the method described in reference #1.

2. Procedure

To estimate emissions to the atmosphere:

(a) Determine the amount (in curies) used at facilities for the period under consideration. Radioactive materials in sealed packages that remain unopened, and have not leaked during the assessment period should not be included in the calculation.

(b) Multiply the amount used by the following factors which depend on the physical state of the radionuclide. They are:

(i) 1 for gases;

(ii) $10^{-3}$for liquids or particulate solids; and

(iii) $10^{-6}$for solids.

If any nuclide is heated to a temperature of 100 degrees Celsius or more, boils at a temperature of 100 degrees Celsius or less, or is intentionally dispersed into the environment, it must be considered to be a gas.

(c) If a control device is installed between the place of use and the point of release, multiply emissions from (b) by an adjustment factor. These are presented in Table 1.

Table 1—Adjustment to Emission Factors for Effluent Controls

Controls	Types of radionuclides controlled	Adjustment factor to emissions	Comments and conditions
HEPA filters	Particulates	0.01	Not applicable to gaseous radionuclides; periodic testing is prudent to ensure high removal efficiency.
Fabric filter	Particulates	0.1	Monitoring would be prudent to guard against tears in filter.
Sintered metal	Particulates	1	Insufficient data to make recommendation.
Activated carbon filters	Iodine gas	0.1	Efficiency is time dependent; monitoring is necessary to ensure effectiveness.
Douglas bags: Held one week or longer	Xenon	0.5/wk	Based on xenon half-life of 5.3 days;

for decay			
Douglas bags: Released within one week	Xenon	1	Provides no reduction of exposure to general public.
Venturi scrubbers	Particulates Gases	0.05 1	Although venturis may remove gases, variability in gaseous removal efficiency dictates adjustment factor for particulates only.
Packed bed scrubbers	Gases	0.1	Not applicable to particulates.
Electrostatic precipitators	Particulates	0.05	Not applicable for gaseous radionuclides
Xenon traps	Xenon	0.1	Efficiency is time dependent; monitoring is necessary to ensure effectiveness.
Fume hoods	All	1	Provides no reduction to general public exposures.
Vent stacks	All	1	Generally provides no reduction of exposure to general public.

References

(1) Environmental Protection Agency, “A Guide for Determining Compliance with the Clean Air Act Standards for Radionuclides Emissions from NRC-Licensed and Non-DOE Federal Facilities”, EPA 520/1–89–002, January 1989.

(2) Nuclear Regulatory Commission, “Methods for Estimating Radioactive and Toxic Airborne Source Terms for Uranium Milling Operations”, U.S. Nuclear Regulatory Commission Regulatory Guide 3.59, March 1987.

[54 FR 51711, Dec. 15, 1989]

Appendix E to Part 61—Compliance Procedures Methods for Determining Compliance With Subpart I

1. Purpose and Background

This Appendix provides simplified procedures to reduce the burden on Nuclear Regulatory Commission (NRC) licensees, and non-Department of Energy Federal facilities in determining compliance with 40 CFR part 61, subpart I. The procedures consist of a series of increasingly more stringent steps, depending on the facility's potential to exceed the standard.

First, a facility can be found in compliance if the quantity of radioactive material possessed during the year is less than that listed in a table of annual possession quantities. A facility will also be in compliance if the average annual radionuclide emission concentration is less than that listed in a table of air concentration levels. If the facility is not in compliance by these tables, it can establish compliance by estimating a dose using screening procedure developed by the National Council on Radiation Protection and Measurements with a radiological source term derived using

EPA approved emission factors. These procedures are described in a “Guide for Determining Compliance with the Clean Air Act Standards for Radionuclide Emissions From NRC-Licenced and Non-DOE Federal Facilities.”

A user-friendly computer program called COMPLY has been developed to reduce the burden on the regulated community. The Agency has also prepared a “User's Guide for the COMPLY Code” to assist the regulated community in using the code, and in handling more complex situations such as multiple release points. The basis for these compliance procedures are provided in “Background Information Document: Procedures Approved for Demonstrating Compliance with 40 CFR Part 61, Subpart I”. The compliance model is the highest level in the COMPLY computer code and provides for the most realistic assessment of dose by allowing the use of site-specific information.

2. Table of Annual Possession Quantity

(a) Table 1 may be used for determining if facilities are in compliance with the standard. The possession table can only be used if the following conditions are met:

(i) No person lives within 10 meters of any release point; and

(ii) No milk, meat, or vegetables are produced within 100 meters of any release point.

(b) Procedures described in Reference (1) shall be used to determine compliance or exemption from reporting by use of Table 2.

Table 1—Annual Possession Quantities for Environmental Compliance

[Annual Possession Quantities (Ci/yr)]

Radionuclide	Gaseous form*	Liquid/powder forms	Solid form*
Ac-225	9.6E−05	9.6E−02	9.6E+01
Ac-227	1.6E−07	1.6E−04	1.6E−01
Ac-228	3.4E−03	3.4E+00	3.4E+03
Ag-106	1.6E+00	1.6E+03	1.6E+06
Ag-106m	2.6E−03	2.6E+00	2.6E+03
Ag-108m	6.5E−06	6.5E−03	6.5E+00
Ag-110m	9.4E−05	9.4E−02	9.4E+01
Ag-111	6.7E−02	6.7E+01	6.7E+04
Al-26	4.0E−06	4.0E−03	4.0E+00
Am-241	2.3E−06	2.3E−03	2.3E+00
Am-242	1.8E−02	1.8E+01	1.8E+04
Am-242m	2.5E−06	2.5E−03	2.5E+00
Am-243	2.3E−06	2.3E−03	2.3E+00
Am-244	4.6E−02	4.6E+01	4.6E+04
Am-245	7.0E+00	7.0E+03	7.0E+06

Am-246	9.8E−01	9.8E+02	9.8E+05
Ar-37	1.4E+06		
Ar-41	1.4E+00		
As-72	2.9E−02	2.9E+01	2.9E+04
As-73	6.0E−02	6.0E+01	6.0E+04
As-74	4.3E−03	4.3E+00	4.3E+03
As-76	8.8E−02	8.8E+01	8.8E+04
As-77	7.9E−01	7.9E+02	7.9E+05
At-211	1.0E−02	1.0E+01	1.0E+04
Au-193	4.2E−01	4.2E+02	4.2E+05
Au-194	3.5E−02	3.5E+01	3.5E+04
Au-195	3.3E−03	3.3E+00	3.3E+03
Au-198	4.6E−02	4.6E+01	4.6E+04
Au-199	1.5E−01	1.5E+02	1.5E+05
Ba-131	1.0E−02	1.0E+01	1.0E+04
Ba-133	4.9E−05	4.9E−02	4.9E+01
Ba-133m	9.3E−02	9.3E+01	9.3E+04
Ba-135m	5.8E−01	5.8E+02	5.8E+05
Ba-139	4.7E+00	4.7E+03	4.7E+06
Ba-140	2.1E−03	2.1E+00	2.1E+03
Ba-141	1.3E+00	1.3E+03	1.3E+06
Ba-142	1.1E+00	1.1E+03	1.1E+06
Be-7	2.3E−02	2.3E+01	2.3E+04
Be-10	3.0E−03	3.0E+00	3.0E+03
Bi-206	3.1E−03	3.1E+00	3.1E+03
Bi-207	8.4E−06	8.4E−03	8.4E+00
Bi-210	4.2E−03	4.2E+00	4.2E+03
Bi-212	4.7E−02	4.7E+01	4.7E+04
Bi-213	6.0E−02	6.0E+01	6.0E+04
Bi-214	1.4E−01	1.4E+02	1.4E+05

Bk-249	7.0E−04	7.0E−01	7.0E+02
Bk-250	1.0E−01	1.0E+02	1.0E+05
Br-77	7.5E−02	7.5E+01	7.5E+04
Br-80	1.2E+01	1.2E+04	1.2E+07
Br-80m	1.5E+00	1.5E+03	1.5E+06
Br-82	1.6E−02	1.6E+01	1.6E+04
Br-83	9.9E+00	9.9E+03	9.9E+06
Br-84	5.6E−01	5.6E+02	5.6E+05
C-11	1.3E+00	1.3E+03	1.3E+06
C-14	2.9E−01	2.9E+02	2.9E+05
Ca-41	2.7E−02	2.7E+01	2.7E+04
Ca-45	5.8E−02	5.8E+01	5.8E+04
Ca-47	1.1E−02	1.1E+01	1.1E+04
Cd-109	5.0E−03	5.0E+00	5.0E+03
Cd-113	3.3E−04	3.3E−01	3.3E+02
Cd-113m	4.4E−04	4.4E−01	4.4E+02
Cd-115	5.4E−02	5.4E+01	5.4E+04
Cd-115m	1.0E−02	1.0E+01	1.0E+04
Cd-117	5.6E−02	5.6E+01	5.6E+04
Cd-117m	1.3E−01	1.3E+02	1.3E+05
Ce-139	2.6E−03	2.6E+00	2.6E+03
Ce-141	1.8E−02	1.8E+01	1.8E+04
Ce-143	1.0E−01	1.0E+02	1.0E+05
Ce-144	1.7E−03	1.7E+00	1.7E+03
Cf-248	2.0E−05	2.0E−02	2.0E+01
Cf-249	1.7E−06	1.7E−03	1.7E+00
Cf-250	4.0E−06	4.0E−03	4.0E+00
Cf-251	1.7E−06	1.7E−03	1.7E+00
Cf-252	6.4E−06	6.4E−03	6.4E+00
Cf-253	3.3E−04	3.3E−01	3.3E+02

Cf-254	3.6E−06	3.6E−03	3.6E+00
Cl-36	1.9E−04	1.9E−01	1.9E+02
Cl-38	6.5E−01	6.5E+02	6.5E+05
Cm-242	6.0E−05	6.0E−02	6.0E+01
Cm-243	3.3E−06	3.3E−03	3.3E+00
Cm-244	4.2E−06	4.2E−03	4.2E+00
Cm-245	2.3E−06	2.3E−03	2.3E+00
Cm-246	2.3E−06	2.3E−03	2.3E+00
Cm-247	2.3E−06	2.3E−03	2.3E+00
Cm-248	6.4E−07	6.4E−04	6.4E−01
Cm-249	4.6E+00	4.6E+03	4.6E+06
Cm-250	1.1E−07	1.1E−04	1.1E−01
Co-56	2.4E−04	2.4E−01	2.4E+02
Co-57	1.6E−03	1.6E+00	1.6E+03
Co-58	9.0E−04	9.0E−01	9.0E+02
Co-58m	1.7E−01	1.7E+02	1.7E+05
Co-60	1.6E−05	1.6E−02	1.6E+01
Co-60m	4.0E+00	4.0E+03	4.0E+06
Co-61	3.8E+00	3.8E+03	3.8E+06
Cr-49	9.0E−01	9.0E+02	9.0E+05
Cr-51	6.3E−02	6.3E+01	6.3E+04
Cs-129	1.5E−01	1.5E+02	1.5E+05
Cs-131	2.8E−01	2.8E+02	2.8E+05
Cs-132	1.3E−02	1.3E+01	1.3E+04
Cs-134	5.2E−05	5.2E−02	5.2E+01
Cs-134m	3.2E−01	3.2E+02	3.2E+05
Cs-135	2.4E−02	2.4E+01	2.4E+04
Cs-136	2.1E−03	2.1E+00	2.1E+03
Cs-137	2.3E−05	2.3E−02	2.3E+01
Cs-138	4.4E−01	4.4E+02	4.4E+05

Cu-61	4.0E−01	4.0E+02	4.0E+05
Cu-64	5.2E−01	5.2E+02	5.2E+05
Cu-67	1.5E−01	1.5E+02	1.5E+05
Dy-157	4.4E−01	4.4E+02	4.4E+05
Dy-165	5.6E+00	5.6E+03	5.6E+06
Dy-166	8.1E−02	8.1E+01	8.1E+04
Er-169	4.0E−01	4.0E+02	4.0E+05
Er-171	3.6E−01	3.6E+02	3.6E+05
Es-253	2.6E−04	2.6E−01	2.6E+02
Es-254	2.3E−05	2.3E−02	2.3E+01
Es-254m	1.8E−03	1.8E+00	1.8E+03
Eu-152	1.6E−05	1.6E−02	1.6E+01
Eu-152m	3.5E−01	3.5E+02	3.5E+05
Eu-154	2.0E−05	2.0E−02	2.0E+01
Eu-155	5.2E−04	5.2E−01	5.2E+02
Eu-156	3.2E−03	3.2E+00	3.2E+03
F-18	5.6E−01	5.6E+02	5.6E+05
Fe-52	4.9E−02	4.9E+01	4.9E+04
Fe-55	1.4E−01	1.4E+02	1.4E+05
Fe-59	1.3E−03	1.3E+00	1.3E+03
Fm-254	1.8E−02	1.8E+01	1.8E+04
Fm-255	4.0E−03	4.0E+00	4.0E+03
Fr-223	1.4E−01	1.4E+02	1.4E+05
Ga-66	5.6E−02	5.6E+01	5.6E+04
Ga-67	1.1E−01	1.1E+02	1.1E+05
Ga-68	7.6E−01	7.6E+02	7.6E+05
Ga-72	3.6E−02	3.6E+01	3.6E+04
Gd-152	4.4E−06	4.4E−03	4.4E+00
Gd-153	2.0E−03	2.0E+00	2.0E+03
Gd-159	6.8E−01	6.8E+02	6.8E+05

Ge-68	2.3E−04	2.3E−01	2.3E+02
Ge-71	2.6E+00	2.6E+03	2.6E+06
Ge-77	1.0E−01	1.0E+02	1.0E+05
H-3	1.5E+01	1.5E+04	1.5E+07
Hf-181	2.5E−03	2.5E+00	2.5E+03
Hg-193m	9.5E−02	9.5E+01	9.5E+04
Hg-197	2.4E−01	2.4E+02	2.4E+05
Hg-197m	2.5E−01	2.5E+02	2.5E+05
Hg-203	5.2E−03	5.2E+00	5.2E+03
Ho-166	2.8E−01	2.8E+02	2.8E+05
Ho-166m	6.0E−06	6.0E−03	6.0E+00
I-123	4.9E−01	4.9E+02	4.9E+05
I-124	9.3E−03	9.3E+00	9.3E+03
I-125	6.2E−03	6.2E+00	6.2E+03
I-126	3.7E−03	3.7E+00	3.7E+03
I-128	9.3E+00	9.3E+03	9.3E+06
I-129	2.6E−04	2.6E−01	2.6E+02
I-130	4.6E−02	4.6E+01	4.6E+04
I-131	6.7E−03	6.7E+00	6.7E+03
I-132	2.0E−01	2.0E+02	2.0E+05
I-133	6.7E−02	6.7E+01	6.7E+04
I-134	3.2E−01	3.2E+02	3.2E+05
I-135	1.2E−01	1.2E+02	1.2E+05
In-111	4.9E−02	4.9E+01	4.9E+04
In-113m	2.1E+00	2.1E+03	2.1E+06
In-114m	4.9E−03	4.9E+00	4.9E+03
In-115	2.7E−04	2.7E−01	2.7E+02
In-115m	1.4E+00	1.4E+03	1.4E+06
In-116m	3.5E−01	3.5E+02	3.5E+05
In-117	1.3E+00	1.3E+03	1.3E+06

In-117m	7.6E−02	7.6E+01	7.6E+04
Ir-190	3.5E−03	3.5E+00	3.5E+03
Ir-192	9.7E−04	9.7E−01	9.7E+02
Ir-194	2.5E−01	2.5E+02	2.5E+05
Ir-194m	1.5E−04	1.5E−01	1.5E+02
K-40	6.8E−05	6.8E−02	6.8E+01
K-42	2.9E−01	2.9E+02	2.9E+05
K-43	6.0E−02	6.0E+01	6.0E+04
K-44	4.9E−01	4.9E+02	4.9E+05
Kr-79	7.0E+00		
Kr-81	1.8E+02		
Kr-83m	2.0E+04		
Kr-85	8.4E+02		
Kr-85m	1.1E+01		
Kr-87	2.0E+00		
Kr-88	4.2E−01		
La-140	1.6E−02	1.6E+01	1.6E+04
La-141	1.1E+00	1.1E+03	1.1E+06
La-142	2.3E−01	2.3E+02	2.3E+05
Lu-177	1.4E−01	1.4E+02	1.4E+05
Lu-177m	3.5E−04	3.5E−01	3.5E+02
Mg-28	2.1E−02	2.1E+01	2.1E+04
Mn-52	3.5E−03	3.5E+00	3.5E+03
Mn-52m	5.2E−01	5.2E+02	5.2E+05
Mn-53	5.7E−02	5.7E+01	5.7E+04
Mn-54	2.5E−04	2.5E−01	2.5E+02
Mn-56	2.5E−01	2.5E+02	2.5E+05
Mo-93	1.5E−03	1.5E+00	1.5E+03
Mo-99**	5.7E−02	5.7E+01	5.7E+04
Mo-101	8.4E−01	8.4E+02	8.4E+05

Na-22	3.2E−05	3.2E−02	3.2E+01
Na-24	2.6E−02	2.6E+01	2.6E+04
Nb-90	2.5E−02	2.5E+01	2.5E+04
Nb-93m	1.2E−02	1.2E+01	1.2E+04
Nb-94	6.0E−06	6.0E−03	6.0E+00
Nb-95	2.3E−03	2.3E+00	2.3E+03
Nb-95m	2.0E−02	2.0E+01	2.0E+04
Nb-96	2.5E−02	2.5E+01	2.5E+04
Nb-97	1.0E+00	1.0E+03	1.0E+06
Nd-147	3.0E−02	3.0E+01	3.0E+04
Nd-149	1.1E+00	1.1E+03	1.1E+06
Ni-56	2.0E−03	2.0E+00	2.0E+03
Ni-57	2.1E−02	2.1E+01	2.1E+04
Ni-59	2.2E−02	2.2E+01	2.2E+04
Ni-63	1.4E−01	1.4E+02	1.4E+05
Ni-65	7.0E−01	7.0E+02	7.0E+05
Np-235	3.0E−02	3.0E+01	3.0E+04
Np-237	1.8E−06	1.8E−03	1.8E+00
Np-238	1.9E−02	1.9E+01	1.9E+04
Np-239	1.0E−01	1.0E+02	1.0E+05
Np-240	6.5E−01	6.5E+02	6.5E+05
Np-240m	4.7E+00	4.7E+03	4.7E+06
Os-185	9.2E−04	9.2E−01	9.2E+02
Os-191m	9.0E−01	9.0E+02	9.0E+05
Os-191	3.8E−02	3.8E+01	3.8E+04
Os-193	2.9E−01	2.9E+02	2.9E+05
P-32	1.7E−02	1.7E+01	1.7E+04
P-33	1.2E−01	1.2E+02	1.2E+05
Pa-230	6.3E−04	6.3E−01	6.3E+02
Pa-231	8.3E−07	8.3E−04	8.3E−01

Pa-233	9.3E−03	9.3E+00	9.3E+03
Pa-234	9.3E−02	9.3E+01	9.3E+04
Pb-203	8.3E−02	8.3E+01	8.3E+04
Pb-205	1.2E−02	1.2E+01	1.2E+04
Pb-209	1.1E+01	1.1E+04	1.1E+07
Pb-210	5.5E−05	5.5E−02	5.5E+01
Pb-211	1.2E−01	1.2E+02	1.2E+05
Pb-212	6.0E−03	6.0E+00	6.0E+03
Pb-214	1.2E−01	1.2E+02	1.2E+05
Pd-103	2.1E−01	2.1E+02	2.1E+05
Pd-107	8.2E−02	8.2E+01	8.2E+04
Pd-109	9.4E−01	9.4E+02	9.4E+05
Pm-143	7.6E−04	7.6E−01	7.6E+02
Pm-144	1.1E−04	1.1E−01	1.1E+02
Pm-145	5.2E−04	5.2E−01	5.2E+02
Pm-146	4.4E−05	4.4E−02	4.4E+01
Pm-147	2.6E−02	2.6E+01	2.6E+04
Pm-148	1.7E−02	1.7E+01	1.7E+04
Pm-148m	7.6E−04	7.6E−01	7.6E+02
Pm-149	2.8E−01	2.8E+02	2.8E+05
Pm-151	1.2E−01	1.2E+02	1.2E+05
Po-210	9.3E−05	9.3E−02	9.3E+01
Pr-142	2.8E−01	2.8E+02	2.8E+05
Pr-143	1.0E−01	1.0E+02	1.0E+05
Pr-144	1.5E+01	1.5E+04	1.5E+07
Pt-191	6.4E−02	6.4E+01	6.4E+04
Pt-193	2.1E−02	2.1E+01	2.1E+04
Pt-193m	4.8E−01	4.8E+02	4.8E+05
Pt-195m	1.4E−01	1.4E+02	1.4E+05
Pt-197	1.1E+00	1.1E+03	1.1E+06

Pt-197m	3.6E+00	3.6E+03	3.6E+06
Pu-236	7.0E−06	7.0E−03	7.0E+00
Pu-237	2.3E−02	2.3E+01	2.3E+04
Pu-238	2.7E−06	2.7E−03	2.7E+00
Pu-239	2.5E−06	2.5E−03	2.5E+00
Pu-240	2.5E−06	2.5E−03	2.5E+00
Pu-241	1.3E−04	1.3E−01	1.3E+02
Pu-242	2.5E−06	2.5E−03	2.5E+00
Pu-243	3.8E+00	3.8E+03	3.8E+06
Pu-244	2.4E−06	2.4E−03	2.4E+00
Pu-245	2.1E−01	2.1E+02	2.1E+05
Pu-246	4.8E−03	4.8E+00	4.8E+03
Ra-223	1.3E−04	1.3E−01	1.3E+02
Ra-224	3.2E−04	3.2E−01	3.2E+02
Ra-225	1.3E−04	1.3E−01	1.3E+02
Ra-226	5.5E−06	5.5E−03	5.5E+00
Ra-228	1.3E−05	1.3E−02	1.3E+01
Rb-81	4.2E−01	4.2E+02	4.2E+05
Rb-83	1.4E−03	1.4E+00	1.4E+03
Rb-84	2.0E−03	2.0E+00	2.0E+03
Rb-86	1.7E−02	1.7E+01	1.7E+04
Rb-87	1.0E−02	1.0E+01	1.0E+04
Rb-88	1.7E+00	1.7E+03	1.7E+06
Rb-89	6.4E−01	6.4E+02	6.4E+05
Re−184	1.8E−03	1.8E+00	1.8E+03
Re-184m	3.6E−04	3.6E−01	3.6E+02
Re-186	1.9E−01	1.9E+02	1.9E+05
Re-187	9.3E+00	9.3E+03	9.3E+06
Re-188	3.7E−01	3.7E+02	3.7E+05
Rh-103m	1.7E+02	1.7E+05	1.7E+08

Rh-105	3.4E−01	3.4E+02	3.4E+05
Ru-97	8.3E−02	8.3E+01	8.3E+04
Ru-103	3.1E−03	3.1E+00	3.1E+03
Ru-105	2.9E−01	2.9E+02	2.9E+05
Ru-106	5.9E−04	5.9E−01	5.9E+02
S-35	7.5E−02	7.5E+01	7.5E+04
Sb-117	2.0E+00	2.0E+03	2.0E+06
Sb-122	3.9E−02	3.9E+01	3.9E+04
Sb-124	6.0E−04	6.0E−01	6.0E+02
Sb-125	1.4E−04	1.4E−01	1.4E+02
Sb-126	1.8E−03	1.8E+00	1.8E+03
Sb-126m	7.6E−01	7.6E+02	7.6E+05
Sb-127	2.0E−02	2.0E+01	2.0E+04
Sb-129	1.8E−01	1.8E+02	1.8E+05
Sc-44	1.4E−01	1.4E+02	1.4E+05
Sc-46	4.0E−04	4.0E−01	4.0E+02
Sc-47	1.1E−01	1.1E+02	1.1E+05
Sc-48	1.1E−02	1.1E+01	1.1E+04
Sc-49	1.0E+01	1.0E+04	1.0E+07
Se-73	1.6E−01	1.6E+02	1.6E+05
Se-75	1.1E−03	1.1E+00	1.1E+03
Se-79	6.9E−03	6.9E+00	6.9E+03
Si-31	4.7E+00	4.7E+03	4.7E+06
Si-32	7.2E−04	7.2E−01	7.2E+02
Sm-147	1.4E−05	1.4E−02	1.4E+01
Sm-151	3.5E−02	3.5E+01	3.5E+04
Sm-153	2.4E−01	2.4E+02	2.4E+05
Sn-113	1.9E−03	1.9E+00	1.9E+03
Sn-117m	2.3E−02	2.3E+01	2.3E+04
Sn-119m	2.8E−02	2.8E+01	2.8E+04

Sn-123	1.8E−02	1.8E+01	1.8E+04
Sn-125	7.2E−03	7.2E+00	7.2E+03
Sn-126	4.7E−06	4.7E−03	4.7E+00
Sr-82	1.9E−03	1.9E+00	1.9E+03
Sr-85	1.9E−03	1.9E+00	1.9E+03
Sr-85m	1.5E+00	1.5E+03	1.5E+06
Sr-87m	1.2E+00	1.2E+03	1.2E+06
Sr-89	2.1E−02	2.1E+01	2.1E+04
Sr-90	5.2E−04	5.2E−01	5.2E+02
Sr-91	1.2E−01	1.2E+02	1.2E+05
Sr-92	2.5E−01	2.5E+02	2.5E+05
Ta-182	4.4E−04	4.4E−01	4.4E+02
Tb-157	2.2E−03	2.2E+00	2.2E+03
Tb-160	8.4E−04	8.4E−01	8.4E+02
Tc-95	9.0E−02	9.0E+01	9.0E+04
Tc-95m	1.4E−03	1.4E+00	1.4E+03
Tc-96	5.6E−03	5.6E+00	5.6E+03
Tc-96m	7.0E−01	7.0E+02	7.0E+05
Tc-97	1.5E−03	1.5E+00	1.5E+03
Tc-97m	7.2E−02	7.2E+01	7.2E+04
Tc-98	6.4E−06	6.4E−03	6.4E+00
Tc-99	9.0E−03	9.0E+00	9.0E+03
Tc-99m	1.4E+00	1.4E+03	1.4E+06
Tc-101	3.8E+00	3.8E+03	3.8E+06
Te-121	6.0E−03	6.0E+00	6.0E+03
Te-121m	5.3E−04	5.3E−01	5.3E+02
Te-123	1.2E−03	1.2E+00	1.2E+03
Te-123m	2.7E−03	2.7E+00	2.7E+03
Te-125m	1.5E−02	1.5E+01	1.5E+04
Te-127	2.9E+00	2.9E+03	2.9E+06

Te-127m	7.3E−03	7.3E+00	7.3E+03
Te-129	6.5E+00	6.5E+03	6.5E+06
Te-129m	6.1E−03	6.1E+00	6.1E+03
Te-131	9.4E−01	9.4E+02	9.4E+05
Te-131m	1.8E−02	1.8E+01	1.8E+04
Te-132	6.2E−03	6.2E+00	6.2E+03
Te-133	1.2E+00	1.2E+03	1.2E+06
Te-133m	2.9E−01	2.9E+02	2.9E+05
Te-134	4.4E−01	4.4E+02	4.4E+05
Th-226	3.0E−02	3.0E+01	3.0E+04
Th-227	6.4E−05	6.4E−02	6.4E+01
Th-228	2.9E−06	2.9E−03	2.9E+00
Th-229	4.9E−07	4.9E−04	4.9E−01
Th-230	3.2E−06	3.2E−03	3.2E+00
Th-231	8.4E−01	8.4E+02	8.4E+05
Th-232	6.0E−07	6.0E−04	6.0E−01
Th-234	2.0E−02	2.0E+01	2.0E+04
Ti-44	5.2E−06	5.2E−03	5.2E+00
Ti-45	4.0E−01	4.0E+02	4.0E+05
Tl-200	4.4E−02	4.4E+01	4.4E+04
Tl-201	1.8E−01	1.8E+02	1.8E+05
Tl-202	1.0E−02	1.0E+01	1.0E+04
Tl-204	2.5E−02	2.5E+01	2.5E+04
Tm-170	2.4E−02	2.4E+01	2.4E+04
Tm-171	5.9E−02	5.9E+01	5.9E+04
U-230	5.0E−05	5.0E−02	5.0E+01
U-231	1.4E−01	1.4E+02	1.4E+05
U-232	1.3E−06	1.3E−03	1.3E+00
U-233	7.6E−06	7.6E−03	7.6E+00
U-234	7.6E−06	7.6E−03	7.6E+00

U-235	7.0E−06	7.0E−03	7.0E+00
U-236	8.4E−06	8.4E−03	8.4E+00
U-237	4.7E−02	4.7E+01	4.7E+04
U-238	8.6E−06	8.6E−03	8.6E+00
U-239	8.3E+00	8.3E+03	8.3E+06
U-240	1.8E−01	1.8E+02	1.8E+05
V-48	1.4E−03	1.4E+00	1.4E+03
V-49	1.3E+00	1.3E+03	1.3E+06
W-181	1.1E−02	1.1E+01	1.1E+04
W-185	1.6E−01	1.6E+02	1.6E+05
W-187	1.1E−01	1.1E+02	1.1E+05
W-188	1.0E−02	1.0E+01	1.0E+04
Xe-122	7.6E−02	7.6E+01	7.6E+04
Xe-123	1.6E+00	1.6E+03	1.6E+06
Xe-125	6.0E−01		
Xe-127	7.0E+00		
Xe-129m	7.6E+01		
Xe-131m	2.2E+02		
Xe-133	5.2E+01		
Xe-133m	6.0E+01		
Xe-135	7.6E+00		
Xe-135m	4.2E+00		
Xe-138	9.9E−01		
Y-86	2.8E−02	2.8E+01	2.8E+04
Y-87	2.3E−02	2.3E+01	2.3E+04
Y-88	2.5E−04	2.5E−01	2.5E+02
Y-90	1.1E−01	1.1E+02	1.1E+05
Y-90m	4.3E−01	4.3E+02	4.3E+05
Y-91	1.8E−02	1.8E+01	1.8E+04
Y-91m	1.6E+00	1.6E+03	1.6E+06

Y-92	7.0E−01	7.0E+02	7.0E+05
Y-93	3.8E−01	3.8E+02	3.8E+05
Yb-169	5.5E−03	5.5E+00	5.5E+03
Yb-175	2.1E−01	2.1E+02	2.1E+05
Zn-62	8.6E−02	8.6E+01	8.6E+04
Zn-65	4.4E−04	4.4E−01	4.4E+02
Zn-69	2.7E+01	2.7E+04	2.7E+07
Zn-69m	2.0E−01	2.0E+02	2.0E+05
Zr-86	2.4E−02	2.4E+01	2.4E+04
Zr-88	2.7E−04	2.7E−01	2.7E+02
Zr-89	1.6E−02	1.6E+01	1.6E+04
Zr-93	2.8E−03	2.8E+00	2.8E+03
Zr-95	6.4E−04	6.4E−01	6.4E+02
Zr-97	4.6E−02	4.6E+01	4.6E+04

*Radionuclides boiling at 100°C or less, or exposed to a temperature of 100°C, must be considered a gas. Capsules containing radionuclides in liquid or powder form can be considered to be solids.

**Mo-99 contained in a generator to produce Technetium-99 can be assumed to be a solid.

3. Table of Concentration Levels

(a) Table 2 may be used for determining if facilities are in compliance with the standard.

1. The concentration table as applied to emission estimates can only be used if all releases are from point sources and concentrations have been measured at the stack or vent using EPA-approved methods, and the distance between each stack or vent and the nearest resident is greater than 3 times the diameter of the stack or vent. Procedures provided in Ref. (1) shall be used to determine compliance or exemption from reporting by use of Table 2.

2. The concentration table may be used to determine compliance with the standard based on environmental measurements provided these measurements are made in conformance with the requirements of §61.107(b)(5).

4. NCRP Screening Model

The procedures described in Reference (4) may be used to determine doses to members of the general public from emissions of radionuclides to the atmosphere. Both the total dose from all radionuclides emitted, and the dose caused by radioactive iodine must be considered in accordance with the procedures in Ref. (1).

5. The COMPLY Computer Code

The COMPLY computer code may be used to determine compliance with subpart I. The compliance model in the COMPLY computer code may be used to determine the dose to members of the general public from emissions of

radionuclides to the atmosphere. The EPA may add radionuclides to all or any part of COMPLY to cover radionuclides that may be used by the regulated community.

Table 2—Concentration Levels for Environmental Compliance

Radionuclide	Concentration (Ci/m^3)	Radionuclide	Concentration (Ci/m^3)
Ac-225	9.1E−14	Bi-207	1.0E−14
Ac-227	1.6E−16	Bi-210	2.9E−13
Ac-228	3.7E−12	Bi-212	5.6E−11
Ag-106	1.9E−09	Bi-213	7.1E−11
Ag-106m	1.2E−12	Bi-214	1.4E−10
Ag-108m	7.1E−15	Bk-249	5.6E−13
Ag-110m	9.1E−14	Bk-250	9.1E−11
Ag-111	2.5E−12	Br-77	4.2E−11
Al-26	4.8E−15	Br-80	1.4E−08
Am-241	1.9E−15	Br-80m	1.8E−09
Am-242	1.5E−11	Br-82	1.2E−11
Am-242m	2.0E−15	Br-83	1.2E−08
Am-243	1.8E−15	Br-84	6.7E−10
Am-244	4.0E−11	C-11	1.5E−09
Am-245	8.3E−09	C-14	1.0E−11
Am-246	1.2E−09	Ca-41	4.2E−13
Ar-37	1.6E−03	Ca-45	1.3E−12
Ar-41	1.7E−09	Ca-47	2.4E−12
As-72	2.4E−11	Cd-109	5.9E−13
As-73	1.1E−11	Cd-113	9.1E−15
As-74	2.2E−12	Cd-113m	1.7E−14
As-76	5.0E−11	Cd-115	1.6E−11
As-77	1.6E−10	Cd-115m	8.3E−13
At-211	1.1E−11	Cd-117	6.7E−11
Au-193	3.8E−10	Cd-117m	1.6E−10
Au-194	3.2E−11	Ce-139	2.6E−12

Au-195	3.1E−12	Ce-141	6.3E−12
Au-198	2.1E−11	Ce-143	3.0E−11
Au-199	4.8E−11	Ce-144	6.2E−13
Ba-131	7.1E−12	Cf-248	1.8E−14
Ba-133	5.9E−14	Cf-249	1.4E−15
Ba-133m	5.9E−11	Cf-250	3.2E−15
Ba-135m	1.8E−10	Cf-251	1.4E−15
Ba-139	5.6E−09	Cf-252	5.6E−15
Ba-140	1.3E−12	Cf-253	3.1E−13
Ba-141	1.4E−09	Cf-254	3.0E−15
Ba-142	1.3E−09	Cl-36	2.7E−15
Be-7	2.3E−11	Cl-38	7.7E−10
Be-10	1.6E−12	Cm-242	5.3E−14
Bi-206	2.3E−12	Cm-243	2.6E−15
Cm-244	3.3E−15	Eu-156	1.9E−12
Cm-245	1.8E−15	F-18	6.7E−10
Cm-246	1.9E−15	Fe-52	5.6E−11
Cm-247	1.9E−15	Fe-55	9.1E−12
Cm-248	5.0E−16	Fe-59	6.7E−13
Cm-249	3.7E−09	Fm-254	2.0E−11
Cm-250	9.1E−17	Fm-255	4.3E−12
Co-56	1.8E−13	Fr-223	3.3E−11
Co-57	1.3E−12	Ga-66	6.2E−11
Co-58	6.7E−13	Ga-67	7.1E−11
Co-58m	1.2E−10	Ga-68	9.1E−10
Co-60	1.7E−14	Ga-72	3.8E−11
Co-60m	.4.3E−09	Gd-152	5.0E−15
Co-61	4.5E−09	Gd-153	2.1E−12
Cr-49	1.1E−09	Gd-159	2.9E−10
Cr-51	3.1E−11	Ge-68	2.0E−13

Cs-129	1.4E−10	Ge-71	2.4E−10
Cs-131	3.3E−11	Ge-77	1.0E−10
Cs-132	4.8E−12	H-3	1.5E−09
Cs-134	2.7E−14	Hf-181	1.9E−12
Cs-134m	1.7E−10	Hg-193m	1.0E−10
Cs-135	4.0E−13	Hg-197	8.3E−11
Cs-136	5.3E−13	Hg-197m	1.1E−10
Cs-137	1.9E−14	Hg-203	1.0E−12
Cs-138	5.3E−10	Ho-166	7.1E−11
Cu-61	4.8E−10	Ho-166m	7.1E−15
Cu-64	5.3E−10	I-123	4.3E−10
Cu-67	5.0E−11	I-124	6.2E−13
Dy-157	5.0E−10	I-125	1.2E−13
Dy-165	6.7E−09	I-126	1.1E−13
Dy-166	1.1E−11	I-128	1.1E−08
Er-169	2.9E−11	I-129	9.1E−15
Er-171	4.0E−10	I-130	4.5E−11
Es-253	2.4E−13	I-131	2.1E−13
Es-254	2.0E−14	I-132	2.3E−10
Es-254m	1.8E−12	I-133	2.0E−11
Eu-152	2.0E−14	I-134	3.8E−10
Eu-152m	3.6E−10	I-135	1.2E−10
Eu-154	2.3E−14	In-111	3.6E−11
Eu-155	5.9E−13	In-113m	2.5E−09
In-114m	9.1E−13	Nb-95	2.2E−12
In-115	7.1E−14	Nb-95m	1.4E−11
In-115m	1.6E−09	Nb-96	2.4E−11
In-116m	4.2E−10	Nb-97	1.2E−09
In-117	1.6E−09	Nd-147	7.7E−12
In-117m	9.1E−11	Nd-149	7.1E−10

Ir-190	2.6E−12	Ni-56	1.7E−12
Ir-192	9.1E−13	Ni-57	1.8E−11
Ir-194	1.1E−10	Ni-59	1.5E−11
Ir-194m	1.7E−13	Ni-63	1.4E−11
K-40	2.7E−14	Ni-65	8.3E−10
K-42	2.6E−10	Np-235	2.5E−11
K-43	6.2E−11	Np-237	1.2E−15
K-44	5.9E−10	Np-238	1.4E−11
Kr-79	8.3E−09	Np-239	3.8E−11
Kr-81	2.1E−07	Np-240	7.7E−10
Kr-83m	2.3E−05	Np-240m	5.6E−09
Kr-85	1.0E−06	Os-185	1.0E−12
Kr-85m	1.3E−08	Os-191m	2.9E−10
Kr-87	2.4E−09	Os-191	1.1E−11
Kr-88	5.0E−10	Os-193	9.1E−11
La-140	1.2E−11	P-32	3.3E−13
La-141	7.7E−10	P-33	2.4E−12
La-142	2.7E−10	Pa-230	3.2E−13
Lu-177	2.4E−11	Pa-231	5.9E−16
Lu-177m	3.6E−13	Pa-233	4.8E−12
Mg-28	1.5E−11	Pa-234	1.1E−10
Mn-52	2.8E−12	Pb-203	6.2E−11
Mn-52m	6.2E−10	Pb-205	5.6E−12
Mn-53	1.5E−11	Pb-209	1.3E−08
Mn-54	2.8E−13	Pb-2I0	2.8E−15
Mn-56	2.9E−10	Pb-211	1.4E−10
Mo-93	1.1E−12	Pb-212	6.3E−12
Mo-99	1.4E−11	Pb-214	1.2E−10
Mo-101	1.0E−09	Pd-103	3.8E−11
Na-22	2.6E−14	Pd-107	3.1E−11

Na-24	2.6E−11	Pd-109	4.8E−10
Nb-90	2.6E−11	Pm-143	9.1E−13
Nb-93m	1.0E−11	Pm-144	1.3E−13
Nb-94	7.1E−15	Pm-145	6.2E−13
Pm-146	5.3E−14	Re-184m	3.7E−13
Pm-147	1.1E−11	Re-186	1.8E−11
Pm-148	5.0E−12	Re-187	2.6E−10
Pm-148m	6.7E−13	Re-188	1.7E−10
Pm-149	4.2E−11	Rh-103m	2.1E−07
Pm-151	7.1E−11	Rh-105	1.3E−10
Po-210	7.1E−15	Ru-97	6.7E−11
Pr-142	1.1E−10	Ru-103	2.6E−12
Pr-143	7.1E−12	Ru-105	2.8E−10
Pr-144	1.8E−08	Ru-106	3.4E−13
Pt-191	4.3E−11	S-35	1.3E−12
Pt-193	1.8E−11	Sb-117	2.4E−09
Pt-193m	4.8E−11	Sb-122	1.4E−11
Pt-195m	3.2E−11	Sb-124	5.3E−13
Pt-197	4.0E−10	Sb-125	1.6E−13
Pt-197m	2.6E−09	Sb-126	1.4E−12
Pu-236	5.9E−15	Sb-126m	9.1E−10
Pu-237	1.9E−11	Sb-127	7.1E−12
Pu-238	2.1E−15	Sb-129	7.7E−11
Pu-239	2.0E−15	Sc-44	1.7E−10
Pu-240	2.0E−15	Sc-46	4.2E−13
Pu-241	1.0E−13	Sc-47	3.8E−11
Pu-242	2.0E−15	Sc-48	9.1E−12
Pu-243	4.2E−09	Sc-49	1.2E−08
Pu-244	2.0E−15	Se-73	1.7E−10
Pu-245	2.1E−10	Se-75	1.7E−13

Pu-246	2.2E−12	Se-79	1.1E−13
Ra-223	4.2E−14	Si-31	5.6E−09
Ra-224	1.5E−13	Si-32	3.4E−14
Ra-225	5.0E−14	Sm-147	1.4E−14
Ra-226	3.3E−15	Sm-151	2.1E−11
Ra-228	5.9E−15	Sm-153	5.9E−11
Rb-81	5.0E−10	Sn-113	1.4E−12
Rb-83	3.4E−13	Sn-117m	5.6E−12
Rb-84	3.6E−13	Sn-119m	5.3E−12
Rb-86	5.6E−13	Sn-123	1.1E−12
Rb-87	1.6E−13	Sn-125	1.7E−12
Rb-88	2.1E−09	Sn-126	5.3E−15
Rb-89	7.1E−10	Sr-82	6.2E−13
Re-184	1.5E−12	Sr-85	1.8E−12
Sr-85m	1.6E−09	Th-232	6.2E−16
Sr-87m	1.4E−09	Th-234	2.2E−12
Sr-89	1.8E−12	Ti-44	6.2E−15
Sr-90	1.9E−14	Ti-45	4.8E−10
Sr-91	9.1E−11	Tl-200	4.5E−11
Sr-92	2.9E−10	Tl-201	1.0E−10
Ta-182	4.5E−13	Tl-202	5.0E−12
Tb-157	2.5E−12	Tl-204	1.2E−12
Tb-160	7.7E−13	Tm-170	3.3E−12
Tc-95	1.0E−10	Tm-171	2.6E−11
Tc-95m	1.4E−12	U-230	1.5E−14
Tc-96	5.6E−12	U-231	4.2E−11
Tc-96m	6.7E−10	U-232	1.3E−15
Tc-97	.7.1E−13	U-233	7.1E−15
Tc-97m	7.1E−12	U-234	7.7E−15
Tc-98	6.7E−15	U-235	7.1E−15

Tc-99	1.4E−13	U-236	7.7E−15
Tc-99m	1.7E−09	U-237	1.0E−11
Tc-101	4.5E−09	U-238	8.3E−15
Te-121	1.0E−12	U-239	4.3E−09
Te-121m	1.2E−13	U-240	1.3E−10
Te-123	1.4E−13	V-48	1.0E−12
Te-123m	2.0E−13	V-49	1.6E−10
Te-125m	3.6E−13	W-181	6.7E−12
Te-127	1.0E−09	W-185	2.6E−12
Te-127m	1.5E−13	W-187	7.7E−11
Te-129	7.7E−09	W-188	5.3E−13
Te-129m	1.4E−13	Xe-122	9.1E−11
Te-131	9.1E−11	Xe-123	1.6E−09
Te-131m	1.0E−12	Xe-125	1.1E−11
Te-132	7.1E−13	Xe-127	8.3E−09
Te-133	9.1E−10	Xe-129m	9.1E−08
Te-133m	2.2E−10	Xe-131m	2.6E−07
Te-134	5.3E−10	Xe-133	6.2E−08
Th-226	3.4E−11	Xe-133m	7.1E−08
Th-227	3.8E−14	Xe-135	9.1E−09
Th-228	3.1E−15	Xe-135m	5.0E−09
Th-229	5.3E−16	Xe-138	1.2E−09
Th-230	3.4E−15	Y-86	3.0E−11
Th-231	2.9E−10	Y-87	1.7E−11
Y-88	2.7E−13	Zn-65	9.1E−14
Y-90	1.3E−11	Zn-69	3.2E−08
Y-90m	1.9E−10	Zn-69m	1.7E−10
Y-91	2.1E−12	Zr-86	2.4E−11
Y-91m	1.3E−09	Zr-88	3.1E−13
Y-92	8.3E−10	Zr-89	1.3E−11

Y-93	2.9E−10	Zr-93	2.6E−12
Yb-169	3.7E−12	Zr-95	6.7E−13
Yb-175	4.3E−11	Zr-97	3.8E−11
Zn-62	9.1E−11		

6. References

(1) Environmental Protection Agency, “A Guide for Determining Compliance with the Clean Air Act Standards for Radionuclides Emissions from NRC-Licensed and Non-DOE Federal Facilities”, EPA 520/1–89–002, October 1989.

(2) Environmental Protection Agency, “User's Guide for the COMPLY Code”, EPA 520/1–89–003, October 1989.

(3) Environmental Protection Agency, “Background Information Document: Procedures Approved for Demonstrating Compliance with 40 CFR Part 61, Subpart I”, EPA 520/1–89–001, January 1989.

(4) National Council on Radiation Protection and Measurement, “Screening Techniques for Determining Compliance with Environmental Standards” NCRP Commentary No. 3, Revision of January 1989 with addendum of October, 1989.

[54 FR 51711, Dec. 15, 1989]

Browse Previous

Attachment G

Standards of Performance for Stationary Spark Ignition Internal Combustion Engines

[40 CFR 60, Subpart JJJJ]

Source Name and Location	
Source Name:	Eli Lilly and Company, Lilly Technology Center
Source Location:	1555 South Harding Street, Indianapolis, IN 46168
County:	Marion
SIC Code:	2833, 2834
Operating Permit No.:	T097-30149-00072
Permit Modification No.:	097-32166-00072
Permit Reviewer:	Ghassan Shalabi

NSPS [40 CFR 60, Subpart JJJJ]

Subpart JJJJ—Standards of Performance for Stationary Spark Ignition Internal Combustion Engines

Source: 73 FR 3591, Jan. 18, 2008, unless otherwise noted.

What This Subpart Covers
§ 60.4230 Am I subject to this subpart?

(a) The provisions of this subpart are applicable to manufacturers, owners, and operators of stationary spark ignition (SI) internal combustion engines (ICE) as specified in paragraphs (a)(1) through (5) of this section. For the purposes of this subpart, the date that construction commences is the date the engine is ordered by the owner or operator.

(1) Manufacturers of stationary SI ICE with a maximum engine power less than or equal to 19 kilowatt (KW) (25 horsepower (HP)) that are manufactured on or after July 1, 2008.

(2) Manufacturers of stationary SI ICE with a maximum engine power greater than 19 KW (25 HP) that are gasoline fueled or that are rich burn engines fueled by liquefied petroleum gas (LPG), where the date of manufacture is:

(i) On or after July 1, 2008; or

(ii) On or after January 1, 2009, for emergency engines.

(3) Manufacturers of stationary SI ICE with a maximum engine power greater than 19 KW (25 HP) that are not gasoline fueled and are not rich burn engines fueled by LPG, where the manufacturer participates in the voluntary manufacturer certification program described in this subpart and where the date of manufacture is:

(i) On or after July 1, 2007, for engines with a maximum engine power greater than or equal to 500 HP (except lean burn engines with a maximum engine power greater than or equal to 500 HP and less than 1,350 HP);

(ii) On or after January 1, 2008, for lean burn engines with a maximum engine power greater than or equal to 500 HP and less than 1,350 HP;

(iii) On or after July 1, 2008, for engines with a maximum engine power less than 500 HP; or

(iv) On or after January 1, 2009, for emergency engines.

(4) Owners and operators of stationary SI ICE that commence construction after June 12, 2006, where the stationary SI ICE are manufactured:

(i) On or after July 1, 2007, for engines with a maximum engine power greater than or equal to 500 HP (except lean burn engines with a maximum engine power greater than or equal to 500 HP and less than 1,350 HP);

(ii) on or after January 1, 2008, for lean burn engines with a maximum engine power greater than or equal to 500 HP and less than 1,350 HP;

(iii) on or after July 1, 2008, for engines with a maximum engine power less than 500 HP; or

(iv) on or after January 1, 2009, for emergency engines with a maximum engine power greater than 19 KW (25 HP).

(5) Owners and operators of stationary SI ICE that commence modification or reconstruction after June 12, 2006.

(b) The provisions of this subpart are not applicable to stationary SI ICE being tested at an engine test cell/stand.

(c) If you are an owner or operator of an area source subject to this subpart, you are exempt from the obligation to obtain a permit under 40 CFR part 70 or 40 CFR part 71, provided you are not required to obtain a permit under 40 CFR 70.3(a) or 40 CFR 71.3(a) for a reason other than your status as an area source under this subpart. Notwithstanding the previous sentence, you must continue to comply with the provisions of this subpart as applicable.

(d) For the purposes of this subpart, stationary SI ICE using alcohol-based fuels are considered gasoline engines.

(e) Stationary SI ICE may be eligible for exemption from the requirements of this subpart as described in 40 CFR part 1068, subpart C (or the exemptions described in 40 CFR parts 90 and 1048, for engines that would need to be certified to standards in those parts), except that owners and operators, as well as manufacturers, may be eligible to request an exemption for national security.

(f) Owners and operators of facilities with internal combustion engines that are acting as temporary replacement units and that are located at a stationary source for less than 1 year and that have been properly certified as meeting the standards that would be applicable to such engine under the appropriate nonroad engine provisions, are not required to meet any other provisions under this subpart with regard to such engines.

Emission Standards for Manufacturers

§ 60.4231 What emission standards must I meet if I am a manufacturer of stationary SI internal combustion engines or equipment containing such engines?

(a) Stationary SI internal combustion engine manufacturers must certify their stationary SI ICE with a maximum engine power less than or equal to 19 KW (25 HP) manufactured on or after July 1, 2008 to the certification emission standards and other requirements for new nonroad SI engines in 40 CFR part 90 or 1054, as follows:

If engine replacement is . . .	and manufacturing dates are . . .	the engine must meet emission standards and related requirements for nonhandheld engines under . . .
(1) below 225 cc	July 1, 2008 to December 31, 2011	40 CFR part 90.

(2) below 225 cc	January 1, 2012 or later	40 CFR part 1054.
(3) at or above 225 cc	July 1, 2008 to December 31, 2010	40 CFR part 90.
(4) at or above 225 cc	January 1, 2011 or later	40 CFR part 1054.

(b) Stationary SI internal combustion engine manufacturers must certify their stationary SI ICE with a maximum engine power greater than 19 KW (25 HP) (except emergency stationary ICE with a maximum engine power greater than 25 HP and less than 130 HP) that use gasoline and that are manufactured on or after the applicable date in §60.4230(a)(2), or manufactured on or after the applicable date in §60.4230(a)(4) for emergency stationary ICE with a maximum engine power greater than or equal to 130 HP, to the certification emission standards and other requirements for new nonroad SI engines in 40 CFR part 1048. Stationary SI internal combustion engine manufacturers must certify their emergency stationary SI ICE with a maximum engine power greater than 25 HP and less than 130 HP that are manufactured on or after the applicable date in §60.4230(a)(4) to the Phase 1 emission standards in 40 CFR 90.103, applicable to class II engines, and other requirements for new nonroad SI engines in 40 CFR part 90. Stationary SI internal combustion engine manufacturers may certify their stationary SI ICE with a maximum engine power less than or equal to 30 KW (40 HP) with a total displacement less than or equal to 1,000 cubic centimeters (cc) to the certification emission standards and other requirements for new nonroad SI engines in 40 CFR part 90 or 1054, as appropriate.

(c) Stationary SI internal combustion engine manufacturers must certify their stationary SI ICE with a maximum engine power greater than 19 KW (25 HP) (except emergency stationary ICE with a maximum engine power greater than 25 HP and less than 130 HP) that are rich burn engines that use LPG and that are manufactured on or after the applicable date in §60.4230(a)(2), or manufactured on or after the applicable date in §60.4230(a)(4) for emergency stationary ICE with a maximum engine power greater than or equal to 130 HP, to the certification emission standards and other requirements for new nonroad SI engines in 40 CFR part 1048. Stationary SI internal combustion engine manufacturers must certify their emergency stationary SI ICE with a maximum engine power greater than 25 HP and less than 130 HP that are manufactured on or after the applicable date in §60.4230(a)(4) to the Phase 1 emission standards in 40 CFR 90.103, applicable to class II engines, and other requirements for new nonroad SI engines in 40 CFR part 90. Stationary SI internal combustion engine manufacturers may certify their stationary SI ICE with a maximum engine power less than or equal to 30 KW (40 HP) with a total displacement less than or equal to 1,000 cc to the certification emission standards and other requirements for new nonroad SI engines in 40 CFR part 90 or 1054, as appropriate.

(d) Stationary SI internal combustion engine manufacturers who choose to certify their stationary SI ICE with a maximum engine power greater than 19 KW (25 HP) and less than 75 KW (100 HP) (except gasoline and rich burn engines that use LPG and emergency stationary ICE with a maximum engine power greater than 25 HP and less than 130 HP) under the voluntary manufacturer certification program described in this subpart must certify those engines to the certification emission standards for new nonroad SI engines in 40 CFR part 1048. Stationary SI internal combustion engine manufacturers who choose to certify their emergency stationary SI ICE greater than 25 HP and less than 130 HP, must certify those engines to the Phase 1 emission standards in 40 CFR 90.103, applicable to class II engines, for new nonroad SI engines in 40 CFR part 90. Stationary SI internal combustion engine manufacturers may certify their stationary SI ICE with a maximum engine power less than or equal to 30 KW (40 HP) with a total displacement less than or equal to 1,000 cc to the certification emission standards for new nonroad SI engines in 40 CFR part 90 or 1054, as appropriate. For stationary SI ICE with a maximum engine power greater than 19 KW (25 HP) and less than 75 KW (100 HP) (except gasoline and rich burn engines that use LPG and emergency stationary ICE with a maximum engine power greater than 25 HP and less than 130 HP) manufactured prior to January 1, 2011, manufacturers may choose to certify these engines to the standards in Table 1 to this subpart applicable to engines with a maximum engine power greater than or equal to 100 HP and less than 500 HP.

(e) Stationary SI internal combustion engine manufacturers who choose to certify their stationary SI ICE with a maximum engine power greater than or equal to 75 KW (100 HP) (except gasoline and rich burn engines that use LPG) under the voluntary manufacturer certification program described in this subpart must certify those engines to the emission standards in Table 1 to this subpart. Stationary SI internal combustion engine manufacturers may certify their stationary SI ICE with a maximum engine power greater than or equal to 75 KW (100 HP) that are lean burn engines that use LPG to the certification emission standards for new nonroad SI engines in 40 CFR part 1048. For stationary SI ICE with a maximum engine power greater than or equal to 100 HP (75 KW) and less than 500 HP (373 KW) manufactured prior to January 1, 2011, and for stationary SI ICE with a maximum engine power greater than or equal to 500 HP (373 KW) manufactured prior to July 1, 2010, manufacturers may choose to certify these engines to the certification emission standards for new nonroad SI engines in 40 CFR part 1048 applicable to engines that are not severe duty engines.

(f) Manufacturers of equipment containing stationary SI internal combustion engines meeting the provisions of 40 CFR part 1054 must meet the provisions of 40 CFR part 1060, to the extent they apply to equipment manufacturers.

[73 FR 3591, Jan. 18, 2008, as amended by 73 FR 59175, Oct. 8, 2008]

§ 60.4232 How long must my engines meet the emission standards if I am a manufacturer of stationary SI internal combustion engines?

Engines manufactured by stationary SI internal combustion engine manufacturers must meet the emission standards as required in §60.4231 during the certified emissions life of the engines.

Emission Standards for Owners and Operators

§ 60.4233 What emission standards must I meet if I am an owner or operator of a stationary SI internal combustion engine?

(a) Owners and operators of stationary SI ICE with a maximum engine power less than or equal to 19 KW (25 HP) manufactured on or after July 1, 2008, must comply with the emission standards in §60.4231(a) for their stationary SI ICE.

(b) Owners and operators of stationary SI ICE with a maximum engine power greater than 19 KW (25 HP) manufactured on or after the applicable date in §60.4230(a)(4) that use gasoline must comply with the emission standards in §60.4231(b) for their stationary SI ICE.

(c) Owners and operators of stationary SI ICE with a maximum engine power greater than 19 KW (25 HP) manufactured on or after the applicable date in §60.4230(a)(4) that are rich burn engines that use LPG must comply with the emission standards in §60.4231(c) for their stationary SI ICE.

(d) Owners and operators of stationary SI ICE with a maximum engine power greater than 19 KW (25 HP) and less than 75 KW (100 HP) (except gasoline and rich burn engines that use LPG) must comply with the emission standards for field testing in 40 CFR 1048.101(c) for their non-emergency stationary SI ICE and with the emission standards in Table 1 to this subpart for their emergency stationary SI ICE. Owners and operators of stationary SI ICE with a maximum engine power greater than 19 KW (25 HP) and less than 75 KW (100 HP) manufactured prior to January 1, 2011, that were certified to the standards in Table 1 to this subpart applicable to engines with a maximum engine power greater than or equal to 100 HP and less than 500 HP, may optionally choose to meet those standards.

(e) Owners and operators of stationary SI ICE with a maximum engine power greater than or equal to 75 KW (100 HP) (except gasoline and rich burn engines that use LPG) must comply with the emission standards in Table 1 to this subpart for their stationary SI ICE. For owners and operators of stationary SI ICE with a maximum engine power greater than or equal to 100 HP (except gasoline and rich burn engines that use LPG) manufactured prior to January 1, 2011 that were certified to the certification emission standards in 40 CFR part 1048 applicable to engines that are not severe duty engines, if such stationary SI ICE was certified to a carbon monoxide (CO) standard above the standard in Table 1 to this subpart, then the owners and operators may meet the CO certification (not field testing) standard for which the engine was certified.

(f) Owners and operators of any modified or reconstructed stationary SI ICE subject to this subpart must meet the requirements as specified in paragraphs (f)(1) through (5) of this section.

(1) Owners and operators of stationary SI ICE with a maximum engine power less than or equal to 19 KW (25 HP), that are modified or reconstructed after June 12, 2006, must comply with the same emission standards as those specified in paragraph (a) of this section.

(2) Owners and operators of stationary SI ICE with a maximum engine power greater than 19 KW (25 HP) that use gasoline engines, that are modified or reconstructed after June 12, 2006, must comply with the same emission standards as those specified in paragraph (b) of this section.

(3) Owners and operators of stationary SI ICE with a maximum engine power greater than 19 KW (25 HP) that are rich burn engines that use LPG, that are modified or reconstructed after June 12, 2006, must comply with the same emission standards as those specified in paragraph (c) of this section.

(4) Owners and operators of stationary SI natural gas and lean burn LPG engines with a maximum engine power greater than 19 KW (25 HP), that are modified or reconstructed after June 12, 2006, must comply with the same emission standards as those specified in paragraph (d) or (e) of this section, except that such owners and operators of non-emergency engines and emergency engines greater than or equal to 130 HP must meet a nitrogen oxides (NO_X) emission standard of 3.0 grams per HP-hour (g/HP-hr), a CO emission standard of 4.0 g/HP-hr (5.0 g/HP-hr for non-emergency engines less than 100 HP), and a volatile organic compounds (VOC) emission standard of 1.0 g/HP-hr, or a NO_Xemission standard of 250 ppmvd at 15 percent oxygen (O_2), a CO emission standard 540 ppmvd at 15 percent O_2(675 ppmvd at 15 percent $O_2$for non-emergency engines less than 100 HP), and a VOC emission standard of 86 ppmvd at 15 percent O_2, where the date of manufacture of the engine is:

(i) Prior to July 1, 2007, for non-emergency engines with a maximum engine power greater than or equal to 500 HP;

(ii) Prior to July 1, 2008, for non-emergency engines with a maximum engine power less than 500 HP;

(iii) Prior to January 1, 2009, for emergency engines.

(5) Owners and operators of stationary SI landfill/digester gas ICE engines with a maximum engine power greater than 19 KW (25 HP), that are modified or reconstructed after June 12, 2006, must comply with the same emission standards as those specified in paragraph (e) of this section for stationary landfill/digester gas engines.

(g) Owners and operators of stationary SI wellhead gas ICE engines may petition the Administrator for approval on a case-by-case basis to meet emission standards no less stringent than the emission standards that apply to stationary emergency SI engines greater than 25 HP and less than 130 HP due to the presence of high sulfur levels in the fuel, as specified in Table 1 to this subpart. The request must, at a minimum, demonstrate that the fuel has high sulfur levels that prevent the use of aftertreatment controls and also that the owner has reasonably made all attempts possible to obtain an engine that will meet the standards without the use of aftertreatment controls. The petition must request the most stringent standards reasonably applicable to the engine using the fuel.

(h) Owners and operators of stationary SI ICE that are required to meet standards that reference 40 CFR 1048.101 must, if testing their engines in use, meet the standards in that section applicable to field testing, except as indicated in paragraph (e) of this section.

§ 60.4234 How long must I meet the emission standards if I am an owner or operator of a stationary SI internal combustion engine?

Owners and operators of stationary SI ICE must operate and maintain stationary SI ICE that achieve the emission standards as required in §60.4233 over the entire life of the engine.

Other Requirements for Owners and Operators

§ 60.4235 What fuel requirements must I meet if I am an owner or operator of a stationary SI gasoline fired internal combustion engine subject to this subpart?

Owners and operators of stationary SI ICE subject to this subpart that use gasoline must use gasoline that meets the per gallon sulfur limit in 40 CFR 80.195.

§ 60.4236 What is the deadline for importing or installing stationary SI ICE produced in the previous model year?

(a) After July 1, 2010, owners and operators may not install stationary SI ICE with a maximum engine power of less than 500 HP that do not meet the applicable requirements in §60.4233.

(b) After July 1, 2009, owners and operators may not install stationary SI ICE with a maximum engine power of greater than or equal to 500 HP that do not meet the applicable requirements in §60.4233, except that lean burn engines with a maximum engine power greater than or equal to 500 HP and less than 1,350 HP that do not meet the applicable requirements in §60.4233 may not be installed after January 1, 2010.

(c) For emergency stationary SI ICE with a maximum engine power of greater than 19 KW (25 HP), owners and operators may not install engines that do not meet the applicable requirements in §60.4233 after January 1, 2011.

(d) In addition to the requirements specified in §§60.4231 and 60.4233, it is prohibited to import stationary SI ICE less than or equal to 19 KW (25 HP), stationary rich burn LPG SI ICE, and stationary gasoline SI ICE that do not meet the applicable requirements specified in paragraphs (a), (b), and (c) of this section, after the date specified in paragraph (a), (b), and (c) of this section.

(e) The requirements of this section do not apply to owners and operators of stationary SI ICE that have been modified or reconstructed, and they do not apply to engines that were removed from one existing location and reinstalled at a new location.

§ 60.4237 What are the monitoring requirements if I am an owner or operator of an emergency stationary SI internal combustion engine?

(a) Starting on July 1, 2010, if the emergency stationary SI internal combustion engine that is greater than or equal to 500 HP that was built on or after July 1, 2010, does not meet the standards applicable to non-emergency engines, the owner or operator must install a non-resettable hour meter.

(b) Starting on January 1, 2011, if the emergency stationary SI internal combustion engine that is greater than or equal to 130 HP and less than 500 HP that was built on or after January 1, 2011, does not meet the standards applicable to non-emergency engines, the owner or operator must install a non-resettable hour meter.

(c) If you are an owner or operator of an emergency stationary SI internal combustion engine that is less than 130 HP, was built on or after July 1, 2008, and does not meet the standards applicable to non-emergency engines, you must install a non-resettable hour meter upon startup of your emergency engine.

Compliance Requirements for Manufacturers

§ 60.4238 What are my compliance requirements if I am a manufacturer of stationary SI internal combustion engines ≤19 KW (25 HP) or a manufacturer of equipment containing such engines?

Stationary SI internal combustion engine manufacturers who are subject to the emission standards specified in §60.4231(a) must certify their stationary SI ICE using the certification procedures required in 40 CFR part 90, subpart B, or 40 CFR part 1054, subpart C, as applicable, and must test their engines as specified in those parts. Manufacturers of equipment containing stationary SI internal combustion engines meeting the provisions of 40 CFR part 1054 must meet the provisions of 40 CFR part 1060, subpart C, to the extent they apply to equipment manufacturers.

[73 FR 59176, Oct. 8, 2008]

§ 60.4239 What are my compliance requirements if I am a manufacturer of stationary SI internal combustion engines >19 KW (25 HP) that use gasoline or a manufacturer of equipment containing such engines?

Stationary SI internal combustion engine manufacturers who are subject to the emission standards specified in §60.4231(b) must certify their stationary SI ICE using the certification procedures required in 40 CFR part 1048, subpart C, and must test their engines as specified in that part. Stationary SI internal combustion engine manufacturers who certify their stationary SI ICE with a maximum engine power less than or equal to 30 KW (40 HP) with a total displacement less than or equal to 1,000 cc to the certification emission standards and other requirements for new nonroad SI engines in 40 CFR part 90 or 40 CFR part 1054, and manufacturers of stationary SI emergency engines that are greater than 25 HP and less than 130 HP who meet the Phase 1 emission standards in 40 CFR 90.103, applicable to class II engines, must certify their stationary SI ICE using the certification procedures required in 40 CFR part 90, subpart B, or 40 CFR part 1054, subpart C, as applicable, and must test their engines as specified in those parts. Manufacturers of equipment containing stationary SI internal combustion engines meeting the provisions of 40 CFR part 1054 must meet the provisions of 40 CFR part 1060, subpart C, to the extent they apply to equipment manufacturers.

[73 FR 59176, Oct. 8, 2008]

§ 60.4240 What are my compliance requirements if I am a manufacturer of stationary SI internal combustion engines >19 KW (25 HP) that are rich burn engines that use LPG or a manufacturer of equipment containing such engines?

Stationary SI internal combustion engine manufacturers who are subject to the emission standards specified in §60.4231(c) must certify their stationary SI ICE using the certification procedures required in 40 CFR part 1048, subpart C, and must test their engines as specified in that part. Stationary SI internal combustion engine manufacturers who certify their stationary SI ICE with a maximum engine power less than or equal to 30 KW (40 HP) with a total displacement less than or equal to 1,000 cc to the certification emission standards and other requirements for new nonroad SI engines in 40 CFR part 90 or 40 CFR part 1054, and manufacturers of stationary SI emergency engines that are greater than 25 HP and less than 130 HP who meet the Phase 1 emission standards in 40 CFR 90.103, applicable to class II engines, must certify their stationary SI ICE using the certification procedures required in 40 CFR part 90, subpart B, or 40 CFR part 1054, subpart C, as applicable, and must test their engines as specified in those parts. Manufacturers of equipment containing stationary SI internal combustion engines meeting the provisions of 40 CFR part 1054 must meet the provisions of 40 CFR part 1060, subpart C, to the extent they apply to equipment manufacturers.

[73 FR 59176, Oct. 8, 2008]

§ 60.4241 What are my compliance requirements if I am a manufacturer of stationary SI internal combustion engines participating in the voluntary certification program or a manufacturer of equipment containing such engines?

(a) Manufacturers of stationary SI internal combustion engines with a maximum engine power greater than 19 KW (25 HP) that do not use gasoline and are not rich burn engines that use LPG can choose to certify their engines to the emission standards in §60.4231(d) or (e), as applicable, under the voluntary certification program described in this subpart. Manufacturers who certify their engines under the voluntary certification program must meet the requirements as specified in paragraphs (b) through (g) of this section. In addition, manufacturers of stationary SI internal combustion engines who choose to certify their engines under the voluntary certification program, must also meet the requirements as specified in §60.4247.

(b) Manufacturers of engines other than those certified to standards in 40 CFR part 90 or 40 CFR part 1054 must certify their stationary SI ICE using the certification procedures required in 40 CFR part 1048, subpart C, and must follow the same test procedures that apply to large SI nonroad engines under 40 CFR part 1048, but must use the D–1 cycle of International Organization of Standardization 8178–4: 1996(E) (incorporated by reference, see 40 CFR 60.17) or the test cycle requirements specified in Table 5 to 40 CFR 1048.505, except that Table 5 of 40 CFR 1048.505 applies to high load engines only. Stationary SI internal combustion engine manufacturers who certify their stationary SI ICE with a maximum engine power less than or equal to 30 KW (40 HP) with a total displacement less than or equal to 1,000 cc to the certification emission standards and other requirements for new nonroad SI engines in 40 CFR part 90 or 40 CFR part 1054, and manufacturers of emergency engines that are greater than 25 HP and less than 130 HP who meet the Phase 1 standards in 40 CFR 90.103, applicable to class II engines, must certify their stationary SI ICE using the certification procedures required in 40 CFR part 90, subpart B, or 40 CFR part 1054, subpart C, as applicable, and must test their engines as specified in those parts. Manufacturers of equipment containing stationary SI internal combustion engines meeting the provisions of 40 CFR part 1054 must meet the provisions of 40 CFR part 1060, subpart C, to the extent they apply to equipment manufacturers.

(c) Certification of stationary SI ICE to the emission standards specified in §60.4231(d) or (e), as applicable, is voluntary, but manufacturers who decide to certify are subject to all of the requirements indicated in this subpart with regard to the engines included in their certification. Manufacturers must clearly label their stationary SI engines as certified or non-certified engines.

(d) Manufacturers of natural gas fired stationary SI ICE who conduct voluntary certification of stationary SI ICE to the emission standards specified in §60.4231(d) or (e), as applicable, must certify their engines for operation using fuel that meets the definition of pipeline-quality natural gas. The fuel used for certifying stationary SI natural gas engines must meet the definition of pipeline-quality natural gas as described in §60.4248. In addition, the manufacturer must provide information to the owner and operator of the certified stationary SI engine including the specifications of the pipeline-quality natural gas to which the engine is certified and what adjustments the owner or operator must make to the engine when installed in the field to ensure compliance with the emission standards.

(e) Manufacturers of stationary SI ICE that are lean burn engines fueled by LPG who conduct voluntary certification of stationary SI ICE to the emission standards specified in §60.4231(d) or (e), as applicable, must certify their engines for operation using fuel that meets the specifications in 40 CFR 1065.720.

(f) Manufacturers may certify their engines for operation using gaseous fuels in addition to pipeline-quality natural gas; however, the manufacturer must specify the properties of that fuel and provide testing information showing that the engine will meet the emission standards specified in §60.4231(d) or (e), as applicable, when operating on that fuel. The manufacturer must also provide instructions for configuring the stationary engine to meet the emission standards on fuels that do not meet the pipeline-quality natural gas definition. The manufacturer must also provide information to the owner and operator of the certified stationary SI engine regarding the configuration that is most conducive to reduced emissions where the engine will be operated on gaseous fuels with different quality than the fuel that it was certified to.

(g) A stationary SI engine manufacturer may certify an engine family solely to the standards applicable to landfill/digester gas engines as specified in §60.4231(d) or (e), as applicable, but must certify their engines for operation using landfill/digester gas and must add a permanent label stating that the engine is for use only in landfill/digester gas applications. The label must be added according to the labeling requirements specified in 40 CFR 1048.135(b).

(h) For purposes of this subpart, when calculating emissions of volatile organic compounds, emissions of formaldehyde should not be included.

(i) For engines being certified to the voluntary certification standards in Table 1 of this subpart, the VOC measurement shall be made by following the procedures in 40 CFR 1065.260 and 1065.265 in order to determine the total NMHC emissions by using a flame-ionization detector and non-methane cutter. As an alternative to the nonmethane cutter, manufacturers may use a gas chromatograph as allowed under 40 CFR 1065.267 and may measure ethane, as well as methane, for excluding such levels from the total VOC measurement.

[73 FR 3591, Jan. 18, 2008, as amended by 73 FR 59176, Oct. 8, 2008]

§ 60.4242 What other requirements must I meet if I am a manufacturer of stationary SI internal combustion engines or equipment containing stationary SI internal combustion engines or a manufacturer of equipment containing such engines?

(a) Stationary SI internal combustion engine manufacturers must meet the provisions of 40 CFR part 90, 40 CFR part 1048, or 40 CFR part 1054, as applicable, as well as 40 CFR part 1068 for engines that are certified to the emission standards in 40 CFR part 1048 or 1054, except that engines certified pursuant to the voluntary certification procedures in §60.4241 are subject only to the provisions indicated in §60.4247 and are permitted to provide instructions to owners and operators allowing for deviations from certified configurations, if such deviations are consistent with the provisions of paragraphs §60.4241(c) through (f). Manufacturers of equipment containing stationary SI internal combustion engines meeting the provisions of 40 CFR part 1054 must meet the provisions of 40 CFR part 1060, as applicable. Labels on engines certified to 40 CFR part 1048 must refer to stationary engines, rather than or in addition to nonroad engines, as appropriate.

(b) An engine manufacturer certifying an engine family or families to standards under this subpart that are identical to standards applicable under 40 CFR part 90, 40 CFR part 1048, or 40 CFR part 1054 for that model year may certify any such family that contains both nonroad and stationary engines as a single engine family and/or may include any such family containing stationary engines in the averaging, banking and trading provisions applicable for such engines under those parts. This provision also applies to equipment or component manufacturers certifying to standards under 40 CFR part 1060.

(c) Manufacturers of engine families certified to 40 CFR part 1048 may meet the labeling requirements referred to in paragraph (a) of this section for stationary SI ICE by either adding a separate label containing the information required in paragraph (a) of this section or by adding the words “and stationary” after the word “nonroad” to the label.

(d) For all engines manufactured on or after January 1, 2011, and for all engines with a maximum engine power greater than 25 HP and less than 130 HP manufactured on or after July 1, 2008, a stationary SI engine manufacturer that certifies an engine family solely to the standards applicable to emergency engines must add a permanent label stating that the engines in that family are for emergency use only. The label must be added according to the labeling requirements specified in 40 CFR 1048.135(b).

(e) All stationary SI engines subject to mandatory certification that do not meet the requirements of this subpart must be labeled according to 40 CFR 1068.230 and must be exported under the provisions of 40 CFR 1068.230. Stationary SI engines subject to standards in 40 CFR part 90 may use the provisions in 40 CFR 90.909. Manufacturers of stationary engines with a maximum engine power greater than 25 HP that are not certified to standards and other requirements under 40 CFR part 1048 are subject to the labeling provisions of 40 CFR 1048.20 pertaining to excluded stationary engines.

(f) For manufacturers of gaseous-fueled stationary engines required to meet the warranty provisions in 40 CFR 90.1103 or 1054.120, we may establish an hour-based warranty period equal to at least the certified emissions life of the engines (in engine operating hours) if we determine that these engines are likely to operate for a number of hours greater than the applicable useful life within 24 months. We will not approve an alternate warranty under this paragraph (f) for nonroad engines. An alternate warranty period approved under this paragraph (f) will be the specified number of engine operating hours or two years, whichever comes first. The engine manufacturer shall request this alternate warranty period in its application for certification or in an earlier submission. We may approve an alternate warranty period for an engine family subject to the following conditions:

(1) The engines must be equipped with non-resettable hour meters.

(2) The engines must be designed to operate for a number of hours substantially greater than the applicable certified emissions life.

(3) The emission-related warranty for the engines may not be shorter than any published warranty offered by the manufacturer without charge for the engines. Similarly, the emission-related warranty for any component shall not be shorter than any published warranty offered by the manufacturer without charge for that component.

[73 FR 3591, Jan. 18, 2008, as amended by 73 FR 59177, Oct. 8, 2008]

Compliance Requirements for Owners and Operators

§ 60.4243 What are my compliance requirements if I am an owner or operator of a stationary SI internal combustion engine?

(a) If you are an owner or operator of a stationary SI internal combustion engine that is manufactured after July 1, 2008, and must comply with the emission standards specified in §60.4233(a) through (c), you must comply by purchasing an engine certified to the emission standards in §60.4231(a) through (c), as applicable, for the same engine class and maximum engine power. You must also meet the requirements as specified in 40 CFR part 1068, subparts A through D, as they apply to you. If you adjust engine settings according to and consistent with the manufacturer's instructions, your stationary SI internal combustion engine will not be considered out of compliance. In addition, you must meet one of the requirements specified in (a)(1) and (2) of this section.

(1) If you operate and maintain the certified stationary SI internal combustion engine and control device according to the manufacturer's emission-related written instructions, you must keep records of conducted maintenance to demonstrate compliance, but no performance testing is required if you are an owner or operator.

(2) If you do not operate and maintain the certified stationary SI internal combustion engine and control device according to the manufacturer's emission-related written instructions, your engine will be considered a non-certified engine, and you must demonstrate compliance according to (a)(2)(i) through (iii) of this section, as appropriate.

(i) If you are an owner or operator of a stationary SI internal combustion engine less than 100 HP, you must keep a maintenance plan and records of conducted maintenance to demonstrate compliance and must, to the extent practicable, maintain and operate the engine in a manner consistent with good air pollution control practice for minimizing emissions, but no performance testing is required if you are an owner or operator.

(ii) If you are an owner or operator of a stationary SI internal combustion engine greater than or equal to 100 HP and less than or equal to 500 HP, you must keep a maintenance plan and records of conducted maintenance and must, to the extent practicable, maintain and operate the engine in a manner consistent with good air pollution control practice for minimizing emissions. In addition, you must conduct an initial performance test within 1 year of engine startup to demonstrate compliance.

(iii) If you are an owner or operator of a stationary SI internal combustion engine greater than 500 HP, you must keep a maintenance plan and records of conducted maintenance and must, to the extent practicable, maintain and operate the engine in a manner consistent with good air pollution control practice for minimizing emissions. In addition, you must conduct an initial performance test within 1 year of engine startup and conduct subsequent performance testing every 8,760 hours or 3 years, whichever comes first, thereafter to demonstrate compliance.

(b) If you are an owner or operator of a stationary SI internal combustion engine and must comply with the emission standards specified in §60.4233(d) or (e), you must demonstrate compliance according to one of the methods specified in paragraphs (b)(1) and (2) of this section.

(1) Purchasing an engine certified according to procedures specified in this subpart, for the same model year and demonstrating compliance according to one of the methods specified in paragraph (a) of this section.

(2) Purchasing a non-certified engine and demonstrating compliance with the emission standards specified in §60.4233(d) or (e) and according to the requirements specified in §60.4244, as applicable, and according to paragraphs (b)(2)(i) and (ii) of this section.

(i) If you are an owner or operator of a stationary SI internal combustion engine greater than 25 HP and less than or equal to 500 HP, you must keep a maintenance plan and records of conducted maintenance and must, to the extent practicable, maintain and operate the engine in a manner consistent with good air pollution control practice for minimizing emissions. In addition, you must conduct an initial performance test to demonstrate compliance.

(ii) If you are an owner or operator of a stationary SI internal combustion engine greater than 500 HP, you must keep a maintenance plan and records of conducted maintenance and must, to the extent practicable, maintain and operate the engine in a manner consistent with good air pollution control practice for minimizing emissions. In addition, you must conduct an initial performance test and conduct subsequent performance testing every 8,760 hours or 3 years, whichever comes first, thereafter to demonstrate compliance.

(c) If you are an owner or operator of a stationary SI internal combustion engine that must comply with the emission standards specified in §60.4233(f), you must demonstrate compliance according paragraph (b)(2)(i) or (ii) of this section, except that if you comply according to paragraph (b)(2)(i) of this section, you demonstrate that your non-certified engine complies with the emission standards specified in §60.4233(f).

(d) Emergency stationary ICE may be operated for the purpose of maintenance checks and readiness testing, provided that the tests are recommended by Federal, State or local government, the manufacturer, the vendor, or the insurance company associated with the engine. Maintenance checks and readiness testing of such units is limited to 100 hours per year. There is no time limit on the use of emergency stationary ICE in emergency situations. The owner or operator may petition the Administrator for approval of additional hours to be used for maintenance checks and readiness testing, but a petition is not required if the owner or operator maintains records indicating that Federal, State, or local standards require maintenance and testing of emergency ICE beyond 100 hours per year. Emergency stationary ICE may operate up to 50 hours per year in non-emergency situations, but those 50 hours are counted towards the 100 hours per year provided for maintenance and testing. The 50 hours per year for non-emergency situations cannot be used for peak shaving or to generate income for a facility to supply power to an electric grid or otherwise supply power as part of a financial arrangement with another entity. For owners and operators of emergency engines, any operation other than emergency operation, maintenance and testing, and operation in non-emergency situations for 50 hours per year, as permitted in this section, is prohibited.

(e) Owners and operators of stationary SI natural gas fired engines may operate their engines using propane for a maximum of 100 hours per year as an alternative fuel solely during emergency operations, but must keep records of such use. If propane is used for more than 100 hours per year in an engine that is not certified to the emission standards when using propane, the owners and operators are required to conduct a performance test to demonstrate compliance with the emission standards of §60.4233.

(f) If you are an owner or operator of a stationary SI internal combustion engine that is less than or equal to 500 HP and you purchase a non-certified engine or you do not operate and maintain your certified stationary SI internal combustion engine and control device according to the manufacturer's written emission-related instructions, you are required to perform initial performance testing as indicated in this section, but you are not required to conduct subsequent performance testing unless the stationary engine is rebuilt or undergoes major repair or maintenance. A rebuilt stationary SI ICE means an engine that has been rebuilt as that term is defined in 40 CFR 94.11(a).

(g) It is expected that air-to-fuel ratio controllers will be used with the operation of three-way catalysts/non-selective catalytic reduction. The AFR controller must be maintained and operated appropriately in order to ensure proper operation of the engine and control device to minimize emissions at all times.

(h) If you are an owner/operator of an stationary SI internal combustion engine with maximum engine power greater than or equal to 500 HP that is manufactured after July 1, 2007 and before July 1, 2008, and must comply with the emission standards specified in sections 60.4233(b) or (c), you must comply by one of the methods specified in paragraphs (h)(1) through (h)(4) of this section.

(1) Purchasing an engine certified according to 40 CFR part 1048. The engine must be installed and configured according to the manufacturer's specifications.

(2) Keeping records of performance test results for each pollutant for a test conducted on a similar engine. The test must have been conducted using the same methods specified in this subpart and these methods must have been followed correctly.

(3) Keeping records of engine manufacturer data indicating compliance with the standards.

(4) Keeping records of control device vendor data indicating compliance with the standards.

Testing Requirements for Owners and Operators

§ 60.4244 What test methods and other procedures must I use if I am an owner or operator of a stationary SI internal combustion engine?

Owners and operators of stationary SI ICE who conduct performance tests must follow the procedures in paragraphs (a) through (f) of this section.

(a) Each performance test must be conducted within 10 percent of 100 percent peak (or the highest achievable) load and according to the requirements in §60.8 and under the specific conditions that are specified by Table 2 to this subpart.

(b) You may not conduct performance tests during periods of startup, shutdown, or malfunction, as specified in §60.8(c). If your stationary SI internal combustion engine is non-operational, you do not need to startup the engine solely to conduct a performance test; however, you must conduct the performance test immediately upon startup of the engine.

(c) You must conduct three separate test runs for each performance test required in this section, as specified in §60.8(f). Each test run must be conducted within 10 percent of 100 percent peak (or the highest achievable) load and last at least 1 hour.

(d) To determine compliance with the NO_Xmass per unit output emission limitation, convert the concentration of NO_Xin the engine exhaust using Equation 1 of this section:

$$ER = \frac{C_d \times 1.912 \times 10^{-3} \times Q \times T}{HP - hr} \qquad \text{(Eq. 1)}$$

Where:

ER = Emission rate of NO_Xin g/HP-hr.

C_d= Measured NO_Xconcentration in parts per million by volume (ppmv).

1.912×10^{-3} = Conversion constant for ppm $NO_X$to grams per standard cubic meter at 20 degrees Celsius.

Q = Stack gas volumetric flow rate, in standard cubic meter per hour, dry basis.

T = Time of test run, in hours.

HP-hr = Brake work of the engine, horsepower-hour (HP-hr).

(e) To determine compliance with the CO mass per unit output emission limitation, convert the concentration of CO in the engine exhaust using Equation 2 of this section:

$$ER = \frac{C_d \times 1.164 \times 10^{-3} \times Q \times T}{HP - hr} \qquad \text{(Eq. 2)}$$

Where:

ER = Emission rate of CO in g/HP-hr.

Cd= Measured CO concentration in ppmv.

1.164×10^{-3} = Conversion constant for ppm CO to grams per standard cubic meter at 20 degrees Celsius.

Q = Stack gas volumetric flow rate, in standard cubic meters per hour, dry basis.

T = Time of test run, in hours.

HP-hr = Brake work of the engine, in HP-hr.

(f) For purposes of this subpart, when calculating emissions of VOC, emissions of formaldehyde should not be included. To determine compliance with the VOC mass per unit output emission limitation, convert the concentration of VOC in the engine exhaust using Equation 3 of this section:

$$ER = \frac{C_d \times 1.833 \times 10^{-3} \times Q \times T}{HP - hr} \qquad \text{(Eq. 3)}$$

Where:

ER = Emission rate of VOC in g/HP-hr.

Cd= VOC concentration measured as propane in ppmv.

1.833×10^{-3} = Conversion constant for ppm VOC measured as propane, to grams per standard cubic meter at 20 degrees Celsius.

Q = Stack gas volumetric flow rate, in standard cubic meters per hour, dry basis.

T = Time of test run, in hours.

HP-hr = Brake work of the engine, in HP-hr.

(g) If the owner/operator chooses to measure VOC emissions using either Method 18 of 40 CFR part 60, appendix A, or Method 320 of 40 CFR part 63, appendix A, then it has the option of correcting the measured VOC emissions to account for the potential differences in measured values between these methods and Method 25A. The results from Method 18 and Method 320 can be corrected for response factor differences using Equations 4 and 5 of this section. The corrected VOC concentration can then be placed on a propane basis using Equation 6 of this section.

$$RF_i = \frac{C_{Mi}}{C_{Ai}} \qquad \text{(Eq. 4)}$$

Where:

RFi= Response factor of compound i when measured with EPA Method 25A.

C_Mi= Measured concentration of compound i in ppmv as carbon.

C_Ai= True concentration of compound i in ppmv as carbon.

$$C_{icorr} = RF_i \times C_{imeas} \qquad \text{(Eq. 5)}$$

Where:

Ci_{corr}= Concentration of compound i corrected to the value that would have been measured by EPA Method 25A, ppmv as carbon.

Ci_{meas}= Concentration of compound i measured by EPA Method 320, ppmv as carbon.

$$C_{Eq} = 0.6098 \times C_{icorr} \qquad \text{(Eq. 6)}$$

Where:

CPeq= Concentration of compound i in mg of propane equivalent per DSCM.

Notification, Reports, and Records for Owners and Operators
§ 60.4245 What are my notification, reporting, and recordkeeping requirements if I am an owner or operator of a stationary SI internal combustion engine?

Owners or operators of stationary SI ICE must meet the following notification, reporting and recordkeeping requirements.

(a) Owners and operators of all stationary SI ICE must keep records of the information in paragraphs (a)(1) through (4) of this section.

(1) All notifications submitted to comply with this subpart and all documentation supporting any notification.

(2) Maintenance conducted on the engine.

(3) If the stationary SI internal combustion engine is a certified engine, documentation from the manufacturer that the engine is certified to meet the emission standards and information as required in 40 CFR parts 90, 1048, 1054, and 1060, as applicable.

(4) If the stationary SI internal combustion engine is not a certified engine or is a certified engine operating in a non-certified manner and subject to §60.4243(a)(2), documentation that the engine meets the emission standards.

(b) For all stationary SI emergency ICE greater than or equal to 500 HP manufactured on or after July 1, 2010, that do not meet the standards applicable to non-emergency engines, the owner or operator of must keep records of the hours of operation of the engine that is recorded through the non-resettable hour meter. For all stationary SI emergency ICE greater than or equal to 130 HP and less than 500 HP manufactured on or after July 1, 2011 that do not meet the standards applicable to non-emergency engines, the owner or operator of must keep records of the hours of operation of the engine that is recorded through the non-resettable hour meter. For all stationary SI emergency ICE greater than 25 HP and less than 130 HP manufactured on or after July 1, 2008, that do not meet the standards applicable to non-emergency engines, the owner or operator of must keep records of the hours of operation of the engine that is recorded through the non-resettable hour meter. The owner or operator must document how many hours are spent for emergency operation, including what classified the operation as emergency and how many hours are spent for non-emergency operation.

(c) Owners and operators of stationary SI ICE greater than or equal to 500 HP that have not been certified by an engine manufacturer to meet the emission standards in §60.4231 must submit an initial notification as required in §60.7(a)(1). The notification must include the information in paragraphs (c)(1) through (5) of this section.

(1) Name and address of the owner or operator;

(2) The address of the affected source;

(3) Engine information including make, model, engine family, serial number, model year, maximum engine power, and engine displacement;

(4) Emission control equipment; and

(5) Fuel used.

(d) Owners and operators of stationary SI ICE that are subject to performance testing must submit a copy of each performance test as conducted in §60.4244 within 60 days after the test has been completed.

[73 FR 3591, Jan. 18, 2008, as amended by 73 FR 59177, Oct. 8, 2008]

General Provisions
§ 60.4246 What parts of the General Provisions apply to me?

Table 3 to this subpart shows which parts of the General Provisions in §§60.1 through 60.19 apply to you.

Mobile Source Provisions
§ 60.4247 What parts of the mobile source provisions apply to me if I am a manufacturer of stationary SI internal combustion engines or a manufacturer of equipment containing such engines?

(a) Manufacturers certifying to emission standards in 40 CFR part 90, including manufacturers certifying emergency engines below 130 HP, must meet the provisions of 40 CFR part 90. Manufacturers certifying to emission standards in 40 CFR part 1054 must meet the provisions of 40 CFR part 1054. Manufacturers of equipment containing stationary SI internal combustion engines meeting the provisions of 40 CFR part 1054 must meet the provisions of 40 CFR part 1060 to the extent they apply to equipment manufacturers.

(b) Manufacturers required to certify to emission standards in 40 CFR part 1048 must meet the provisions of 40 CFR part 1048. Manufacturers certifying to emission standards in 40 CFR part 1048 pursuant to the voluntary certification program must meet the requirements in Table 4 to this subpart as well as the standards in 40 CFR 1048.101.

(c) For manufacturers of stationary SI internal combustion engines participating in the voluntary certification program and certifying engines to Table 1 to this subpart, Table 4 to this subpart shows which parts of the mobile source provisions in 40 CFR parts 1048, 1065, and 1068 apply to you. Compliance with the deterioration factor provisions under 40 CFR 1048.205(n) and 1048.240 will be required for engines built new on and after January 1, 2010. Prior to January 1, 2010, manufacturers of stationary internal combustion engines participating in the voluntary certification program have the option to develop their own deterioration factors based on an engineering analysis.

[73 FR 3591, Jan. 18, 2008, as amended by 73 FR 59177, Oct. 8, 2008]

Definitions
§ 60.4248 What definitions apply to this subpart?

As used in this subpart, all terms not defined herein shall have the meaning given them in the CAA and in subpart A of this part.

Certified emissions life means the period during which the engine is designed to properly function in terms of reliability and fuel consumption, without being remanufactured, specified as a number of hours of operation or calendar years, whichever comes first. The values for certified emissions life for stationary SI ICE with a maximum engine power less than or equal to 19 KW (25 HP) are given in 40 CFR 90.105, 40 CFR 1054.107, and 40 CFR 1060.101, as appropriate. The values for certified emissions life for stationary SI ICE with a maximum engine power greater than 19 KW (25 HP) certified to 40 CFR part 1048 are given in 40 CFR 1048.101(g). The certified emissions life for stationary SI ICE with a maximum engine power greater than 75 KW (100 HP) certified under the voluntary manufacturer certification program of this subpart is 5,000 hours or 7 years, whichever comes first.

Certified stationary internal combustion engine means an engine that belongs to an engine family that has a certificate of conformity that complies with the emission standards and requirements in this part, or of 40 CFR part 90, 40 CFR part 1048, or 40 CFR part 1054, as appropriate.

Combustion turbine means all equipment, including but not limited to the turbine, the fuel, air, lubrication and exhaust gas systems, control systems (except emissions control equipment), and any ancillary components and sub-components comprising any simple cycle combustion turbine, any regenerative/recuperative cycle combustion turbine, the combustion turbine portion of any cogeneration cycle combustion system, or the combustion turbine portion of any combined cycle steam/electric generating system.

Compression ignition means relating to a type of stationary internal combustion engine that is not a spark ignition engine.

Diesel fuel means any liquid obtained from the distillation of petroleum with a boiling point of approximately 150 to 360 degrees Celsius. One commonly used form is number 2 distillate oil.

Digester gas means any gaseous by-product of wastewater treatment typically formed through the anaerobic decomposition of organic waste materials and composed principally of methane and carbon dioxide (CO2).

Emergency stationary internal combustion engine means any stationary internal combustion engine whose operation is limited to emergency situations and required testing and maintenance. Examples include stationary ICE used to produce power for critical networks or equipment (including power supplied to portions of a facility) when electric power from the local utility (or the normal power source, if the facility runs on its own power production) is interrupted, or stationary ICE used to pump water in the case of fire or flood, etc. Stationary SI ICE used for peak shaving are not considered emergency stationary ICE. Stationary ICE used to supply power to an electric grid or that supply power as part of a financial arrangement with another entity are not considered to be emergency engines.

Engine manufacturer means the manufacturer of the engine. See the definition of “manufacturer” in this section.

Four-stroke engine means any type of engine which completes the power cycle in two crankshaft revolutions, with intake and compression strokes in the first revolution and power and exhaust strokes in the second revolution.

Gasoline means any fuel sold in any State for use in motor vehicles and motor vehicle engines, or nonroad or stationary engines, and commonly or commercially known or sold as gasoline.

Landfill gas means a gaseous by-product of the land application of municipal refuse typically formed through the anaerobic decomposition of waste materials and composed principally of methane and CO_2.

Lean burn engine means any two-stroke or four-stroke spark ignited engine that does not meet the definition of a rich burn engine.

Liquefied petroleum gas means any liquefied hydrocarbon gas obtained as a by-product in petroleum refining of natural gas production.

Manufacturer has the meaning given in section 216(1) of the Clean Air Act. In general, this term includes any person who manufactures a stationary engine for sale in the United States or otherwise introduces a new stationary engine into commerce in the United States. This includes importers who import stationary engines for resale.

Maximum engine power means maximum engine power as defined in 40 CFR 1048.801.

Model year means either: The calendar year in which the engine was originally produced, or the annual new model production period of the engine manufacturer if it is different than the calendar year. This must include January 1 of the calendar year for which the model year is named. It may not begin before January 2 of the previous calendar year, and it must end by December 31 of the named calendar year. For an engine that is converted to a stationary engine after being placed into service as a nonroad or other non-stationary engine, model year means the calendar year or new model production period in which the engine was originally produced.

Natural gas means a naturally occurring mixture of hydrocarbon and non-hydrocarbon gases found in geologic formations beneath the Earth's surface, of which the principal constituent is methane. Natural gas may be field or pipeline quality.

Other internal combustion engine means any internal combustion engine, except combustion turbines, which is not a reciprocating internal combustion engine or rotary internal combustion engine.

Pipeline-quality natural gas means a naturally occurring fluid mixture of hydrocarbons (e.g., methane, ethane, or propane) produced in geological formations beneath the Earth's surface that maintains a gaseous state at standard atmospheric temperature and pressure under ordinary conditions, and which is provided by a supplier through a pipeline. Pipeline-quality natural gas must either be composed of at least 70 percent methane by volume or have a gross calorific value between 950 and 1,100 British thermal units per standard cubic foot.

Rich burn engine means any four-stroke spark ignited engine where the manufacturer's recommended operating air/fuel ratio divided by the stoichiometric air/fuel ratio at full load conditions is less than or equal to 1.1. Engines originally manufactured as rich burn engines, but modified prior to June 12, 2006, with passive emission control technology for NO_X(such as pre-combustion chambers) will be considered lean burn engines. Also, existing engines where there are no manufacturer's recommendations regarding air/fuel ratio will be considered a rich burn engine if the excess oxygen content of the exhaust at full load conditions is less than or equal to 2 percent.

Rotary internal combustion engine means any internal combustion engine which uses rotary motion to convert heat energy into mechanical work.

Spark ignition means relating to either: a gasoline-fueled engine; or any other type of engine with a spark plug (or other sparking device) and with operating characteristics significantly similar to the theoretical Otto combustion cycle. Spark ignition engines usually use a throttle to regulate intake air flow to control power during normal operation. Dual-fuel engines in which a liquid fuel (typically diesel fuel) is used for compression ignition and gaseous fuel (typically natural gas) is used as the primary fuel at an annual average ratio of less than 2 parts diesel fuel to 100 parts total fuel on an energy equivalent basis are spark ignition engines.

Stationary internal combustion engine means any internal combustion engine, except combustion turbines, that converts heat energy into mechanical work and is not mobile. Stationary ICE differ from mobile ICE in that a stationary internal combustion engine is not a nonroad engine as defined at 40 CFR 1068.30 (excluding paragraph (2)(ii) of that definition), and is not used to propel a motor vehicle or a vehicle used solely for competition. Stationary ICE include reciprocating ICE, rotary ICE, and other ICE, except combustion turbines.

Stationary internal combustion engine test cell/stand means an engine test cell/stand, as defined in subpart PPPPP of this part, that test stationary ICE.

Stoichiometric means the theoretical air-to-fuel ratio required for complete combustion.

Subpart means 40 CFR part 60, subpart JJJJ.

Two-stroke engine means a type of engine which completes the power cycle in single crankshaft revolution by combining the intake and compression operations into one stroke and the power and exhaust operations into a second stroke. This system requires auxiliary scavenging and inherently runs lean of stoichiometric.

Volatile organic compounds means volatile organic compounds as defined in 40 CFR 51.100(s).

Voluntary certification program means an optional engine certification program that manufacturers of stationary SI internal combustion engines with a maximum engine power greater than 19 KW (25 HP) that do not use gasoline and are not rich burn engines that use LPG can choose to participate in to certify their engines to the emission standards in §60.4231(d) or (e), as applicable.

[73 FR 3591, Jan. 18, 2008, as amended by 73 FR 59177, Oct. 8, 2008]

Table 1 to Subpart JJJJ of Part 60—NO_X, CO, and VOC Emission Standards for Stationary Non-Emergency SI Engines ≥100 HP (Except Gasoline and Rich Burn LPG), Stationary SI Landfill/Digester Gas Engines, and Stationary Emergency Engines >25 HP

Engine type and fuel	Maximum	Manufacture	Emission standards[a]

	engine power	date	g/HP-hr			ppmvd at 15% O_2		
			NO_X	CO	VOC[d]	NO_X	CO	VOC[d]
Non-Emergency SI Natural Gas[b] and Non-Emergency SI Lean Burn LPG[b]	100≤HP<500	7/1/2008 1/1/2011	2.0 1.0	4.0 2.0	1.0 0.7	160 82	540 270	86 60
Non-Emergency SI Lean Burn Natural Gas and LPG	500≥HP<1,350	1/1/2008 7/1/2010	2.0 1.0	4.0 2.0	1.0 0.7	160 82	540 270	86 60
Non-Emergency SI Natural Gas and Non-Emergency SI Lean Burn LPG (except lean burn 500=≥HP<1,350)	HP≥500 HP≥500	7/1/2007 7/1/2010	2.0 1.0	4.0 2.0	1.0 0.7	160 82	540 270	86 60
Landfill/Digester Gas (except lean burn 500≥HP<1,350)	HP<500	7/1/2008 1/1/2011	3.0 2.0	5.0 5.0	1.0 1.0	220 150	610 610	80 80
	HP≥500	7/1/2007 7/1/2010	3.0 2.0	5.0 5.0	1.0 1.0	220 150	610 610	80 80
Landfill/Digester Gas Lean Burn	500≥HP<1,350	1/1/2008 7/1/2010	3.0 2.0	5.0 5.0	1.0 1.0	220 150	610 610	80 80
Emergency	25>HP<130 HP≥130	1/1/2009	[c]10 2.0	387 4.0	N/A 1.0	N/A 160	N/A 540	N/A 86

[a]Owners and operators of stationary non-certified SI engines may choose to comply with the emission standards in units of either g/HP-hr or ppmvd at 15 percent O2.

[b]Owners and operators of new or reconstructed non-emergency lean burn SI stationary engines with a site rating of greater than or equal to 250 brake HP located at a major source that are meeting the requirements of 40 CFR part 63, subpart ZZZZ, Table 2A do not have to comply with the CO emission standards of Table 1 of this subpart.

[c]The emission standards applicable to emergency engines between 25 HP and 130 HP are in terms of NO_X+HC.

[d]For purposes of this subpart, when calculating emissions of volatile organic compounds, emissions of formaldehyde should not be included.

Table 2 to Subpart JJJJ of Part 60—Requirements for Performance Tests				
[As stated in §60.4244, you must comply with the following requirements for performance tests within 10 percent of 100 percent peak (or the highest achievable) load]				
For each	**Complying with the requirement to**	**You must**	**Using**	**According to the following requirements**
1. Stationary SI internal combustion engine demonstrating compliance according to §60.4244.	a. limit the concentration of NO_Xin the stationary SI internal combustion engine exhaust.	i. Select the sampling port location and the number of traverse points;	(1) Method 1 or 1A of 40 CFR part 60, appendix A or ASTM Method D6522–00(2005)[a].	(a) If using a control device, the sampling site must be located at the outlet of the control device.
	ii. Determine the O_2concentration of the stationary internal combustion engine exhaust at the sampling port location;	(2) Method 3, 3A, or 3B[b]of 40 CFR part 60, appendix A or ASTM Method D6522–00(2005)[a].	(b) Measurements to determine O_2concentration must be made at the same time as the measurements for NO_Xconcentration.	
	iii. Determine the exhaust flowrate of the stationary internal combustion engine exhaust;	(3) Method 2 or 19 of 40 CFR part 60.		
	iv. If necessary, measure moisture content of the stationary internal combustion engine exhaust at the sampling port location; and	(4) Method 4 of 40 CFR part 60, appendix A, Method 320 of 40 CFR part 63, appendix A, or ASTM D6348–03 (incorporated by reference, see §60.17).	(c) Measurements to determine moisture must be made at the same time as the measurement for NO_Xconcentration.	
	v. Measure NO_Xat the exhaust of the stationary internal combustion engine.	(5) Method 7E of 40 CFR part 60, appendix A, Method D6522–00(2005)[a], Method 320 of 40 CFR part 63, appendix A, or ASTM D6348–03 (incorporated by reference, see §60.17).	(d) Results of this test consist of the average of the three 1-hour or longer runs.	

Table 2 to Subpart JJJJ of Part 60—Requirements for Performance Tests				
[As stated in §60.4244, you must comply with the following requirements for performance tests within 10 percent of 100 percent peak (or the highest achievable) load]				
For each	**Complying with the requirement to**	**You must**	**Using**	**According to the following requirements**
	b. limit the concentration of CO in the stationary SI internal combustion engine exhaust.	i. Select the sampling port location and the number of traverse points;	(1) Method 1 or 1A of 40 CFR part 60, appendix A.	(a) If using a control device, the sampling site must be located at the outlet of the control device.
	ii. Determine the O_2concentration of the stationary internal combustion engine exhaust at the sampling port location;	(2) Method 3, 3A, or 3Bb of 40 CFR part 60, appendix A or ASTM Method D6522–00(2005)[a].	(b) Measurements to determine O_2concentration must be made at the same time as the measurements for CO concentration.	
	iii. Determine the exhaust flowrate of the stationary internal combustion engine exhaust;	(3) Method 2 or 19 of 40 CFR part 60.		
	iv. If necessary, measure moisture content of the stationary internal combustion engine exhaust at the sampling port location; and	(4) Method 4 of 40 CFR part 60, appendix A, Method 320 of 40 CFR part 63, appendix A, or ASTM D6348–03 (incorporated by reference, see §60.17).	(c) Measurements to determine moisture must be made at the same time as the measurement for CO concentration.	
	v. Measure CO at the exhaust of the stationary internal combustion engine.	(5) Method 10 of 40 CFR part 60, appendix A, ASTM Method D6522–00(2005)[a], Method 320 of 40 CFR part 63, appendix A, or ASTM D 6348–03 (incorporated by reference, see §60.17).	(d) Results of this test consist of the average of the three 1-hour or longer runs.	
	c. limit the concentration of VOC in the stationary SI internal combustion engine exhaust.	i. Select the sampling port location and the number of traverse points;	(1) Method 1 or 1A of 40 CFR part 60, appendix A.	(a) If using a control device, the sampling site must be located at the outlet of the control device.

Table 2 to Subpart JJJJ of Part 60—Requirements for Performance Tests				
[As stated in §60.4244, you must comply with the following requirements for performance tests within 10 percent of 100 percent peak (or the highest achievable) load]				
For each	**Complying with the requirement to**	**You must**	**Using**	**According to the following requirements**
	ii. Determine the O_2concentration of the stationary internal combustion engine exhaust at the sampling port location;	(2) Method 3, 3A, or 3B[b]of 40 CFR part 60, appendix A or ASTM Method D6522–00(2005)[a].	(b) Measurements to determine O_2concentration must be made at the same time as the measurements for VOC concentration.	
	iii. Determine the exhaust flowrate of the stationary internal combustion engine exhaust;	(3) Method 2 or 19 of 40 CFR part 60.		
	iv. If necessary, measure moisture content of the stationary internal combustion engine exhaust at the sampling port location; and	(4) Method 4 of 40 CFR part 60, appendix A, Method 320 of 40 CFR part 63, appendix A, or ASTM D6348–03 (incorporated by reference, see §60.17).	(c) Measurements to determine moisture must be made at the same time as the measurement for VOC concentration.	
	v. Measure VOC at the exhaust of the stationary internal combustion engine.	(5) Methods 25A and 18 of 40 CFR part 60, appendix A, Method 25A with the use of a methane cutter as described in 40 CFR 1065.265, Method 18 or 40 CFR part 60, appendix A,[cd]Method 320 of 40 CFR part 63, appendix A, or ASTM D6348–03 (incorporated by reference, see §60.17).	(d) Results of this test consist of the average of the three 1-hour or longer runs.	

[a]ASTM D6522–00 is incorporated by reference; see 40 CFR 60.17. Also, you may petition the Administrator for approval to use alternative methods for portable analyzer.

[b]You may use ASME PTC 19.10–1981, Flue and Exhaust Gas Analyses, for measuring the O_2content of the exhaust gas as an alternative to EPA Method 3B.

[c]You may use EPA Method 18 of 40 CFR part 60, appendix A, provided that you conduct an adequate presurvey test prior to the emissions test, such as the one described in OTM 11 on EPA's Web site (*http://www.epa.gov/ttn/emc/prelim/otm11.pdf*).

[d]You may use ASTM D6420–99 (2004), Test Method for Determination of Gaseous Organic Compounds by Direct Interface Gas Chromatography/Mass Spectrometry as an alternative to EPA Method 18 for measuring total nonmethane organic.

Table 3 to Subpart JJJJ of Part 60—Applicability of General Provisions to Subpart JJJJ			
[As stated in §60.4246, you must comply with the following applicable General Provisions]			
General provisions citation	**Subject of citation**	**Applies to subpart**	**Explanation**
§60.1	General applicability of the General Provisions	Yes	
§60.2	Definitions	Yes	Additional terms defined in §60.4248.
§60.3	Units and abbreviations	Yes	
§60.4	Address	Yes	
§60.5	Determination of construction or modification	Yes	
§60.6	Review of plans	Yes	
§60.7	Notification and Recordkeeping	Yes	Except that §60.7 only applies as specified in §60.4245.
§60.8	Performance tests	Yes	Except that §60.8 only applies to owners and operators who are subject to performance testing in subpart JJJJ.
§60.9	Availability of information	Yes	
§60.10	State Authority	Yes	
§60.11	Compliance with standards and maintenance requirements	Yes	Requirements are specified in subpart JJJJ.
§60.12	Circumvention	Yes	
§60.13	Monitoring requirements	No	
§60.14	Modification	Yes	
§60.15	Reconstruction	Yes	
§60.16	Priority list	Yes	
§60.17	Incorporations by reference	Yes	
§60.18	General control device requirements	No	

Table 3 to Subpart JJJJ of Part 60—Applicability of General Provisions to Subpart JJJJ			
[As stated in §60.4246, you must comply with the following applicable General Provisions]			
General provisions citation	**Subject of citation**	**Applies to subpart**	**Explanation**
§60.19	General notification and reporting requirements	Yes	

Table 4 to Subpart JJJJ of Part 60—Applicability of Mobile Source Provisions for Manufacturers Participating in the Voluntary Certification Program and Certifying Stationary SI ICE to Emission Standards in Table 1 of Subpart JJJJ			
[As stated in §60.4247, you must comply with the following applicable mobile source provisions if you are a manufacturer participating in the voluntary certification program and certifying stationary SI ICE to emission standards in Table 1 of subpart JJJJ]			
Mobile source provisions citation	**Subject of citation**	**Applies to subpart**	**Explanation**
1048 subpart A	Overview and Applicability	Yes	
1048 subpart B	Emission Standards and Related Requirements	Yes	Except for the specific sections below.
1048.101	Exhaust Emission Standards	No	
1048.105	Evaporative Emission Standards	No	
1048.110	Diagnosing Malfunctions	No	
1048.140	Certifying Blue Sky Series Engines	No	
1048.145	Interim Provisions	No	
1048 subpart C	Certifying Engine Families	Yes	Except for the specific sections below.
1048.205(b)	AECD reporting	Yes	
1048.205(c)	OBD Requirements	No	
1048.205(n)	Deterioration Factors	Yes	Except as indicated in 60.4247(c).
1048.205(p)(1)	Deterioration Factor Discussion	Yes	
1048.205(p)(2)	Liquid Fuels as they require	No	
1048.240(b)(c)(d)	Deterioration Factors	Yes	
1048 subpart D	Testing Production-Line Engines	Yes	
1048 subpart E	Testing In-Use Engines	No	
1048 subpart F	Test Procedures	Yes	

Table 4 to Subpart JJJJ of Part 60—Applicability of Mobile Source Provisions for Manufacturers Participating in the Voluntary Certification Program and Certifying Stationary SI ICE to Emission Standards in Table 1 of Subpart JJJJ			
[As stated in §60.4247, you must comply with the following applicable mobile source provisions if you are a manufacturer participating in the voluntary certification program and certifying stationary SI ICE to emission standards in Table 1 of subpart JJJJ]			
Mobile source provisions citation	**Subject of citation**	**Applies to subpart**	**Explanation**
1065.5(a)(4)	Raw sampling (refers reader back to the specific emissions regulation for guidance)	Yes	
1048 subpart G	Compliance Provisions	Yes	
1048 subpart H	Reserved		
1048 subpart I	Definitions and Other Reference Information	Yes	
1048 appendix I and II	Yes		
1065 (all subparts)	Engine Testing Procedures	Yes	Except for the specific section below.
1065.715	Test Fuel Specifications for Natural Gas	No	
1068 (all subparts)	General Compliance Provisions for Nonroad Programs	Yes	Except for the specific sections below.
1068.245	Hardship Provisions for Unusual Circumstances	No	
1068.250	Hardship Provisions for Small-Volume Manufacturers	No	
1068.255	Hardship Provisions for Equipment Manufacturers and Secondary Engine Manufacturers	No	

Indiana Department of Environmental Management
Office of Air Quality

Addendum to the Technical Support Document for Part 70 Significant Permit Modification

Source Description and Location

Source Name:	Eli Lilly and Company, Lilly Technology Center
Source Location:	1555 South Harding Street, Indianapolis, IN 46168
County:	Marion
SIC Code:	2833, 2834
Operation Permit No.:	T097-30149-00072
Operation Permit Issuance Date:	June 13, 2011
Significant Permit Modification No.:	097-32466-00072
Permit Reviewer:	Ghassan Shalabi

Public Notice Information

On January 28, 2013, the Office of Air Quality (OAQ) had a notice published in the Indianapolis Star, Indianapolis, Indiana, stating that Eli Lilly and Company, Lilly Technology Center had applied for a Part 70 Significant Permit Modification relating to adding an emergency generator at building 359. The application also includes the addition of an insignificant sized compression ignition emergency generator at B314, whose addition is covered by the Advance Approval conditions of the existing permit. The Permittee has also requested to add the following:

1. The requirements of 326 IAC 8-5-3 to Building 130 complex
2. Revise Conditions D.4.1 and D.4.2
3. Revise Condition D.4.4 (b)
4. Update the CFR reference date in Attachments A through F of the permit

Proposed Changes

The IDEM does not amend the Technical Support Document (TSD). The TSD is maintained to document the original review. This addendum to the TSD is used to document comments, responses to comments and changes made from the time the permit was drafted until a final decision is made.

The Office of Air Quality (OAQ) received comments from Eli Lilly and Company, Lilly Technology Center during the public notice period. The following is a summary of the comments. In the responses, additions to the permit are bolded for emphasis; the language with a line through it has been deleted.

Comment 1:
As currently written, D.4.4(b), which incorporates the requirements of 326 IAC 8-5-3(b)(2) into the permit does not state that it applies only to air dryers and production equipment exhaust systems with potential to emit VOC at greater than 15 pounds per day. Because Rule 8-5-3 applies only to equipment with potential to emit greater than 15 pounds per day, this term should be revised to be consistent with the regulations. All other provisions in Condition D.4.4 include language that limits applicability to equipment with potential to emit greater than 15 pounds per day, so the proposed revision will make D.4.4(b) consistent with the rest of D.4.4. Proposed language is included in Appendix B.

As noted above, please revise the proposed permit language at Conditions D.4.4(b) and D.5.2(b) to read:

Pursuant to 326 IAC 8-5-3(b)(2), VOC emissions from all air dryers and production equipment exhaust systems which have the potential to emit VOC greater than 15 pounds per day shall be reduced:

This will conform the applicability to that of the underlying rule.

Response to Comment 1:
IDEM agrees with the source. Conditions D.4.4(b) and D.5.2(b) are changed as follows:

D.4.4 Synthesized Pharmaceutical Manufacturing Operations [326 IAC 8-5-3]

...

(b) Pursuant to 326 IAC 8-5-3(b)(2), VOC emissions from all air dryers and production equipment exhaust systems **which have the potential to emit VOC greater than 15 pounds per day** shall be reduced:

(1) by at least ninety percent (90%) if emissions are one hundred fifty (150) kilograms per day (three hundred thirty (330) pounds per day) or more of VOC; or

(2) to fifteen (15) kilograms per day (thirty three (33) pounds per day) or less if emissions are less than one hundred fifty (150) kilograms per day (three hundred thirty (330) pounds per day) of VOC.

...

D.5.2 Synthesized Pharmaceutical Manufacturing Operations [326 IAC 8-5-3]

...

(b) Pursuant to 326 IAC 8-5-3(b)(2), VOC emissions from all air dryers and production equipment exhaust systems **which have the potential to emit VOC greater than 15 pounds per day** shall be reduced:

(1) by at least ninety percent (90%) if emissions are one hundred fifty (150) kilograms per day (three hundred thirty (330) pounds per day) or more of VOC; or

(2) to fifteen (15) kilograms per day (thirty three (33) pounds per day) or less if emissions are less than one hundred fifty (150) kilograms per day (three hundred thirty (330) pounds per day) of VOC.

...

Comment 2:
Section D.1.1(c)(2) has a picture of scissors instead of a plus/minus symbol (typographical error)

Response to Comment 2:
To correct a typographical error, Condition D.1.1 is changed as follows:

D.1.1 Synthesized Pharmaceutical Manufacturing Operations 326 IAC 8-1-5] [326 IAC 8-5-3]

...

(c) The emission units which have the potential to emit VOC greater than 15 pounds

per day shall comply with the requirements of 326 IAC 8-5-3(b)(3) through (6).

...

(2) Pursuant to 326 IAC 8-5-3(b)(3), the Permittee shall install a pressure / vacuum conservation vents set at plus or minus two-tenths (~~≥~~±0.2) kiloPascals on all storage tanks which have the potential to emit VOC greater than 15 pounds per day and that store VOC with vapor pressures greater than ten (10) kiloPascals (one and five-tenths (1.5) pounds per square inch) at 20 degrees C, unless a more effective control system is used.

...

Comment 3:
Section D.2.2(b) requires compliance with 40 CFR Part 61, Subpart V, but does not reference Section E.4.1 of the permit. For clarity, I suggest the following revision:

BACT for fugitive emissions from waste components in VOC service shall be the Leak Detection and Repair requirements of 40 CFR 61, Subpart V, **as referenced in Section E.4.1 of this permit.** In VOC service means that a piece of equipment either contains or contacts a fluid (liquid or gas) that is at least 5 percent by weight a volatile organic compound (VOC). Waste components are those components after the Pharmaceutical Production MACT point of determination (POD).

Response to Comment 3:
IDEM agrees with the comment. Condition D.2.2 is changed accordingly.

Comment 4:
An error was made in the table entries in Sections E.1 and E.2 for the new B314 Unit 2 engine. These tables show this engine, installed in 2013, in the column" NSPS New; Meet 60.4204" as Yes; Yes. The correct entry should be **Yes; No**—this engine is not expected to meet the standards for non-emergency engines of the same model year, but instead the Tier 2 standards required of emergency engines.

Response to Comment 4:
Section E.1 and Section E.2 are changed as follows:

SECTION E.1 EMISSIONS UNIT OPERATION CONDITIONS

Emissions Unit Description:

(g) Emergency Generators and fire pumps including those below:

Bldg.	Name & if Fire Pump	Manufacturer/ Model	Nominal Capacity	Units	Fuel	CI or SI	Date/Year Installed or Mfd.	NSPS New; Meet 60.4204	RICE MACT
B 134	B 134	Cummins 100DGDBL36421A	166	HP	No.2 oil	CI	1991	No; N/A	Existing
B152	B 152	Cummins 800DFJB	1200	HP	No.2 oil	CI	Before 2002	No; N/A	Existing
B 185	B185 Fire Pump #1	Caterpillar 3406B DI	375	HP	No.2 oil	CI	1990	No; N/A	Existing

B 185	B185 Fire Pump #2	Caterpillar 3406B DI	375	HP	No.2 oil	CI	1990	No; N/A	Existing
B 314	B314	Cummins 200DFAA	380	HP	No.2 oil	CI	1997	No; N/A	Existing
B 360	B 360	Cummins 60CSFAD	145	HP	No.2 oil	CI	2011	Yes; Yes	New
B 180	B 180	Cummins DGDB-4476255	155	HP	No.2 oil	CI	2007 (manufactured 2000)	No; N/A	Existing
B 359	B 359 Fire House	GM Gaseous Engine 3 L 4 cylinder	20	KW	Natural Gas	SI	20006	No; N/A	Existing
B141	B141 A	Cummins DFHD	1350	HP	No. 2 oil	CI	1999	No; N/A	Existing
B141	B141 B	Cummins DFJD	1350	HP	No. 2 oil	CI	2001	No; N/A	Existing
B141	B141 C	Cummins DQKC	2700	HP	No. 2 oil	CI	2006	No; N/A	New
B141	B141 D	Cummins SAK60-G6 NR2	2922	HP	No. 2 oil	CI	2010	Yes; Yes	New
B 314	B314 Unit 2	Cummins 200 DSGAE	324	HP	No. 2 oil	CI	2013	Yes; ~~Yes~~ **No**	New
B 359	B 359 Fire House	TBD	0.25 (383)	MW (HP)	Natural Gas	SI	2013	Yes Yes	New

This is an affected source under 40 CFR 63, Subpart ZZZZ.

(The information describing the process contained in this emissions unit description box is descriptive information and does not constitute enforceable conditions.)

SECTION E.2 EMISSIONS UNIT OPERATION CONDITIONS

Emissions Unit Description:

(g) Emergency Generators and fire pumps including those below:

Bldg.	Name & if Fire Pump	Manufacturer/ Model	Nominal Capacity	Units	Fuel	CI or SI	Date/Year Installed or Mfd.	NSPS New; Meet 60.4204	RICE MACT
B 360	B 360	Cummins 60CSFAD	145	HP	No.2 oil	CI	2011	Yes; Yes	New
B141	B141 D	Cummins SAK60-G6 NR2	2922	HP	No. 2 oil	CI	2010	Yes; Yes	New
B314	B314 Unit 2	Cummins 200DSGAE	324	HP	No. 2 oil	CI	2013	Yes; ~~Yes~~ **No**	New

This is an affected source under 40 CFR 60, Subpart IIII.

(The information describing the process contained in this emissions unit description box is descriptive information and does not constitute enforceable conditions.)

Comment 5:
It is not clear why the descriptive information in Section E.7 needs to contain "at a maximum of 500 hours per year" as this is not in fact a limit applicable to the unit, and is confusing as a result. USEPA guidance provides that the appropriate estimation of potential to emit for an emergency generator is based on 500 hours/year operation; however nothing in the NSPS nor the NESHAPS nor any other rule limits the emergency operation of these units; in fact, the NSPS and NESHAPs explicitly state that operation in emergency situations is unlimited. The rules contain quite explicit conditions which must be met for the unit to be classified as an emergency generator, but do not limit its total operation. Please delete this phrase, as it is unnecessary and confusing.

Response to Comment 5:
IDEM agrees with the comment. Section E.7 is changed as follows:

SECTION E.7 EMISSIONS UNIT OPERATION CONDITIONS

Emissions Unit Description: Emergency Generator

One (1) 0.25MW natural gas-fired emergency generator, identified as B359, permitted in 2013, with heat input capacity of 3.51 million British thermal units per hour, ~~at a maximum of 500 hours per year of operations,~~ using Catalytic Oxidizer as control, and exhausting to stack B359 Emergency Generator.

This is an affected source under 40 CFR 60, Subpart JJJJ.

(The information describing the process contained in this facility description box is descriptive information and does not constitute enforceable conditions.)

IDEM Contact

Questions regarding this proposed permit can be directed to:

Ghassan Shalabi
Indiana Department Environmental Management
Office of Air Quality
100 North Senate Avenue
MC 61-53, Room 1003
Indianapolis, Indiana 46204-2251
Toll free (within Indiana): 1-800-451-6027 extension (4-5378)
Or dial directly: (317) 234-5378
pnguyen@idem.in.gov

Please reference permit number T097-32466-00072 in all correspondence.

Indiana Department of Environmental Management
Office of Air Quality

Technical Support Document (TSD) for a Part 70 Significant Permit Modification

Source Description and Location

Source Name:	Eli Lilly and Company, Lilly Technology Center
Source Location:	1555 South Harding Street, Indianapolis, IN 46168
County:	Marion
SIC Code:	2833, 2834
Operation Permit No.:	T097-30149-00072
Operation Permit Issuance Date:	June 13, 2011
Significant Permit Modification No.:	097-32466-00072
Permit Reviewer:	Ghassan Shalabi

Existing Approvals

The source was issued Part 70 Operating Permit No. 097-30149-00072 on June 13, 2011. The source has not received any other approvals since then.

County Attainment Status

The source is located in Marion County.

Pollutant	Designation
SO_2	Better than national standards.
CO	Attainment effective February 18, 2000, for the part of the city of Indianapolis bounded by 11th Street on the north; Capitol Avenue on the west; Georgia Street on the south; and Delaware Street on the east. Unclassifiable or attainment effective November 15, 1990, for the remainder of Indianapolis and Marion County.
O_3	Attainment effective November 8, 2007, for the 8-hour ozone standard.[1]
PM_{10}	Unclassifiable effective November 15, 1990.
NO_2	Cannot be classified or better than national standards.
Pb	Attainment effective July 10, 2000, for the part of Franklin Township bounded by Thompson Road on the south; Emerson Avenue on the west; Five Points Road on the east; and Troy Avenue on the north. Attainment effective July 10, 2000, for the part of Wayne Township bounded by Rockville Road on the north; Girls School Road on the east; Washington Street on the south; and Bridgeport Road on the west. The remainder of the county is not designated.
[1]Attainment effective October 18, 2000, for the 1-hour ozone standard for the Indianapolis area, including Marion County, and is a maintenance area for the 1-hour ozone National Ambient Air Quality Standards (NAAQS) for purposes of 40 CFR 51, Subpart X*. The 1-hour designation was revoked effective June 15, 2005. Basic nonattainment designation effective federally April 5, 2005, for PM2.5.	

(a) Ozone Standards

Volatile organic compounds (VOC) and Nitrogen Oxides (NOx) are regulated under the Clean Air Act (CAA) for the purposes of attaining and maintaining the National Ambient Air Quality Standards (NAAQS) for ozone. Therefore, VOC and NOx emissions are considered when evaluating the rule applicability relating to ozone. Marion County has been designated as attainment or unclassifiable for ozone. Therefore, VOC and NOx emissions were reviewed pursuant to the requirements for Prevention of Significant

Deterioration (PSD), 326 IAC 2-2.

(b) PM2.5
Marion County has been classified as nonattainment for PM2.5 in 70 FR 943 dated January 5, 2005. On May 8th, 2008, U.S. EPA promulgated specific New Source Review rules for PM2.5 emissions, and the effective date of these rules was July 15th, 2008. Therefore, direct PM2.5 and SO2 emissions were reviewed pursuant to the requirements of Nonattainment New Source Review, 326 IAC 2-1.1-5. See the State Rule Applicability – Entire Source section.

(c) Other Criteria Pollutants
Marion County has been classified as attainment or unclassifiable in Indiana for all other criteria pollutants. Therefore, these emissions were reviewed pursuant to the requirements for Prevention of Significant Deterioration (PSD), 326 IAC 2-2.

Fugitive Emissions

Since this source is classified as a pharmaceutical manufacturing source, it is considered one of the twenty-eight (28) listed source categories, as specified in 326 IAC 2-2, 326 IAC 2-3, or 326 IAC 2-7. Therefore, fugitive emissions are counted toward the determination of PSD, Emission Offset, and Part 70 Permit applicability.

Source Status

The table below summarizes the potential to emit of the entire source, prior to the proposed modification, after consideration of all enforceable limits established in the effective permits:

Pollutant	**Emissions** (ton/yr)
PM	<10
PM_{10}	<10
$PM_{2.5}$	<10
SO_2	1.72
VOC	<104.5
CO	15.29
NO_X	36.24
GHGs as CO_2e	3394..51
Single HAP	>10
Total	>25

(a) This existing source is a major stationary source, under PSD (326 IAC 2-2), because a regulated pollutant is emitted at a rate of 100 tons per year or more, and it is one of the twenty-eight (28) listed source categories, as specified in 326 IAC 2-2-1(ff)(1).

(b) These emissions are based upon Part 70 Operating Permit First Renewal T097-30149-00072, issued on June 13, 2011.

This existing source is a major source of HAPs, as defined in 40 CFR 63.2, because HAP emissions are greater than ten (10) tons per year for a single HAP and greater than twenty-five (25) tons per year for a combination of HAPs. Therefore, this source is a major source under Section 112 of the Clean Air Act (CAA).

Description of Proposed Modification

The Office of Air Quality (OAQ) has reviewed a modification application, submitted by Eli Lilly and Company - Lilly Technology Center on July 31, 2012, and supplemented on December 14, 2012

relating to adding an emergency generator at building 359. The new emergency generator will be a spark ignition, natural gas fired reciprocating engine rated at approximately 383 horsepower to be constructed in 2013. The application also includes the addition of an insignificant sized compression ignition emergency generator at B314, whose addition is covered by the Advance Approval conditions of the existing permit. The Permittee has also requested to add the following:

1. The requirements of 326 IAC 8-5-3 to Building 130 complex
2. Revise Conditions D.4.1 and D.4.2
3. Revise Condition D.4.4 (b)
4. Update the CFR reference date in Attachments A through F of the permit

Emission Calculations

See Appendix A of this Technical Support Document for detailed emission calculations.

Permit Level Determination – Part 70

Pursuant to 326 IAC 2-1.1-1(16), Potential to Emit is defined as "the maximum capacity of a stationary source or emission unit to emit any air pollutant under its physical and operational design. Any physical or operational limitation on the capacity of a source to emit an air pollutant, including air pollution control equipment and restrictions on hours of operation or type or amount of material combusted, stored, or processed shall be treated as part of its design if the limitation is enforceable by the U. S. EPA, IDEM, or the appropriate local air pollution control agency."

The following table is used to determine the appropriate permit level under 326 IAC 2-7-10.5. This table reflects the PTE before controls. Control equipment is not considered federally enforceable until it has been required in a federally enforceable permit.

PTE Before Controls of the New Units (Emergency Generator B359 and Emergency Generator B314 Unit 2)	
Pollutant	**Potential To Emit** (ton/yr)
PM	0.06
PM_{10}	0.06
$PM_{2.5}$	0.06
SO_2	0.04
VOC	0.08
CO	3.40
NO_X	2.58
Single HAPs	0.018
Total HAPs	0.028

Appendix A of this TSD reflects the unrestricted potential emissions of the modification. Additionally, source-wide GHG calculations were performed and included.

Before controls emissions from the new emergency generators are bellow exemption threshold. Therefore, pursuant to 326 IAC 2-1.1-3 this modification is exempt from any source modification requirements. However, the modification will be incorporated into the permit as a Significant Permit Modification under 326 IAC 2-7-12(d) because the B359 emergency generator is subject to 40 CFR 60, Subpart JJJJ which requires the addition of a new emission limit, new record keeping and reporting requirements.

Permit Level Determination – PSD or Nonattainment NSR

The table below summarizes the potential to emit, reflecting all limits, of the emission units. Any control equipment is considered federally enforceable only after issuance of this Part 70 permit modification, and only to the extent that the effect of the control equipment is made practically enforceable in the permit.

	Potential to Emit (ton/yr)							
Process / Emission Unit	**PM**	**PM_{10}**	**$PM_{2.5}$***	**SO_2**	**VOC**	**CO**	**NO_X**	**GHGs**
Emergency Generator B359	0.009	0.01	0.01	0.0005	0.03	3.26	1.94	120.15
Emergency Generator B314 Unit 2	0.05	0.05	0.05	0.04	0.05	0.14	0.64	23.70
Total for Modification	0.06	0.06	0.06	0.04	0.08	3.40	2.58	143.88
Significant Level	25	15	10	40	40	100	40	75,000 CO_2e

*$PM_{2.5}$ listed is direct $PM_{2.5}$.

This modification to an existing major stationary source is not major because the emissions increases are less than the PSD significant levels. Therefore, pursuant to 326 IAC 2-2, the PSD requirements do not apply.

This modification to an existing minor stationary source is not major because the emissions increase is less than the Nonattainment NSR major levels. Therefore, pursuant to 326 IAC 2-1.1-5, the Nonattainment NSR requirements do not apply to this modification.

Process/ Emission Unit	**Potential To Emit of the Entire Source After Issuance of Renewal (tons/year)**								
	PM	PM10*	PM2.5	SO_2	VOC	CO	NOx	HAPs	H2S
Building 110	0	0	0	0	< 10	0	0	Single > 10 Total > 25	0
Building 358	0	0	0	0	< 24.1	0	0		
BHI Building (132)	< 9	< 9	< 9	0	< 40	0	0		
Building 130				0	41.9	0	0		
Building 135	0	0	0	0	< 25	0	0		
Fermentation Operations Building 333	0	0	0	0	0	0	0	0	3.8
Emergency Generator B141A	0.24	0.14	0.14	0.14	0.24	1.86	4.39	0.004	0
Emergency Generator B141B	0.24	0.14	0.14	0.14	0.24	1.86	4.39	0.004	0
Emergency Generator B141C	0.47	0.27	0.27	0.27	0.48	3.71	8.87	0.007	0
Emergency Generator B141D	0.51	0.29	0.29	0.89	0.52	4.02	9.5	0.008	0
Emergency Generator B359	0.009	0.01	0.01	0.0005	0.03	3.26	1.94	0.028	0
Emergency Generator B314 Unit 2	0.05	0.05	0.05	0.04	0.05	0.14	0.64	0.001	0
Other insignificant Emergency Generator	0.49	0.28	0.28	0.28	0.49	3.84	9.09	0.008	0

Process/ Emission Unit	Potential To Emit of the Entire Source After Issuance of Renewal (tons/year)								
	PM	PM10*	PM2.5	SO_2	VOC	CO	NOx	HAPs	H2S
Injection Pen manufacturing lines	0	0	0	0	0.67	0	0	0.068	0
other insignificant activities	< 1	< 1	< 1	0	neg	0	0	neg	0
Total PTE of Entire Source	**< 10**	**< 10**	**< 10**	**1.76**	**<143.72**	**18.79**	**38.82**	**> 10 > 25**	**3.8**
Title V Major Source Thresholds	NA	100	--	100	100	100	100	25	10
Nonattainment NSR Major Source Thresholds	--	--	100	100	--	--	100	NA	NA
PSD Major Source Thresholds	100	100	--	--	100	100	--	NA	NA

negl. = negligible
*Under the Part 70 Permit program (40 CFR 70), particulate matter with an aerodynamic diameter less than or equal to a nominal 10 micrometers (PM10), not particulate matter (PM), is considered as a "regulated air pollutant".

(a) This existing stationary source is major for PSD because the emissions of at least one criteria pollutant are greater than one hundred (>100) tons per year, and it is in one of the twenty-eight (28) listed source categories.

(b) This existing stationary source is minor for Nonattainment NSR because PM2.5, SO2, and NOx emissions are less than one hundred (<100) tons per year.

Federal Rule Applicability Determination

The following federal rules are applicable to the source due to this modification:

NSPS:

(a) New Emergency Generator B359 is subject to the New Source Performance Standards for Stationary Spark Ignition Internal Combustion Engines 40 CFR 60.42, Subpart JJJJ, which is incorporated by reference as 326 IAC 12.

The Emergency Generator, identified as B359 is subject to the following portions of Subpart JJJJ.

(1) 40 CFR 60.4230(a)(4)(iii)
(2) 40 CFR 60.4233(e)
(3) 40 CFR 60.4234
(4) 40 CFR 60.4236(a)
(5) 40 CFR 60.4236(c)
(6) 40 CFR 60.4237
(7) 40 CFR 60.4243(b)
(8) 40 CFR 60.4243(d) and (e)
(9) 40 CFR 60.4243(f)
(10) 40 CFR 60.4243(g)
(11) 40 CFR 60.4245(a) and (b)
(12) 40 CFR 60.4246
(13) 40 CFR 60.4244 when 60.4243(f) applies

(b) New Emergency Generator B359 is not subject to the New Source Performance Standards for stationary Compression Ignition (CI) Internal Combustion Engines (ICE) because Emergency Generator B359 is a Spark Ignition and not a Compression Ignition Internal Combustion Engine.

(c) Emergency Generator B314 Unit 2 is subject to the New Source Performance Standards, 40 CFR 60, Subpart IIII (Standard of Performance for Stationary Compression Ignition Internal Combustion Engines) which is incorporated by reference as 326 IAC 12 because it is CI ICE thats is constructed after 2005.

This emission unit is subject to the folowing part of 40 CFR 60, Subpart IIII:

(1) 40 CFR 60.4201;
(2) 40 CFR 60.4202;
(3) 40 CFR 60.4204; (if the engine is operated for any purposes other than emergencies, maintenance checks or readiness testing);
(4) 40 CFR 60.4205;
(5) 40 CFR 60.4206;
(6) 40 CFR 60.4207(b);
(7) 40 CFR 60.4208;
(8) 40 CFR 60.4209(a);
(9) 40 CFR 60.4211(a);
(10) 40 CFR 60.4211(b);
(11) 40 CFR 60.4211(c);
(12) 40 CFR 60.4211(e);
(13) 40 CFR 60.4214(b);

NESHAP:

(c) New Emergency Generators B359 and B314 Unit 2 are subject to the National Emission Standards for Hazardous Air Pollutants for Stationary Reciprocating Internal Combustion Engines (NESHAPs) (326 IAC 14, 326 IAC 20 and 40 CFR Part 63 Subpart ZZZZ). These Standards apply to stationary reciprocating internal combusting engines (RICE) located at facilities that are Major source of HAPs. The source is a major source of HAPs, therefore, the source is required to comply with the requirements of 40 CFR 63, Subpart ZZZZ. The Emergency Generators, identified as B359 and B314 Unit 2 are subject to following portions of 40 CFR 63, Subpart ZZZZ:

(1) 40 CFR 63.6590(c)(4) and (6)

(d) Pursuant to 40 CFR 64.2, Compliance Assurance Monitoring (CAM) is applicable to new or modified emission units that involve a pollutant-specific emission unit and meet the following criteria:

(1) has a potential to emit before controls equal to or greater than the Part 70 major source threshold for the pollutant involved;

(2) is subject to an emission limitation or standard for that pollutant; and

(3) uses a control device, as defined in 40 CFR 64.1, to comply with that emission limitation or standard.

This modification does not have a potential to emit before control equal to or greater than the Part 70 major source threshold. Therefore, 40 CFR 64 is not applicable to the new emergency generator.

State Rule Applicability Determination

The following state rules are applicable to the source due to the modification:

326 IAC 2-1.1-5 (Nonattainment New Source Review)
Nonattainment New Source Review applicability is discussed under the Permit Level Determination – PSD and Emission Offset section.

326 IAC 2-2 (PSD)
PSD applicability is discussed under the Permit Level Determination – PSD and Emission Offset section.

326 IAC 2-6 (Emission Reporting)
Since this source is required to have an operating permit under 326 IAC 2-7, Part 70 Permit Program, this source is subject to 326 IAC 2-6 (Emission Reporting). In accordance with the compliance schedule in 326 IAC 2-6-3, an emission statement must be submitted triennially. Subsequent reports are due every three (3) years thereafter. The emission statement shall contain, at a minimum, the information specified in 326 IAC 2-6-4.

Compliance Determination and Monitoring Requirements

Permits issued under 326 IAC 2-7 are required to ensure that sources can demonstrate compliance with all applicable state and federal rules on a continuous basis. All state and federal rules contain compliance provisions; however, these provisions do not always fulfill the requirement for a continuous demonstration. When this occurs, IDEM, OAQ, in conjunction with the source, must develop specific conditions to satisfy 326 IAC 2-7-5. As a result, Compliance Determination Requirements are included in the permit. The Compliance Determination Requirements in Section D of the permit are those conditions that are found directly within state and federal rules and the violation of which serves as grounds for enforcement action.

If the Compliance Determination Requirements are not sufficient to demonstrate continuous compliance, they will be supplemented with Compliance Monitoring Requirements, also in Section D of the permit. Unlike Compliance Determination Requirements, failure to meet Compliance Monitoring conditions would serve as a trigger for corrective actions and not grounds for enforcement action. However, a violation in relation to a compliance monitoring condition will arise through a source's failure to take the appropriate corrective actions within a specific time period.

There are no new Compliance or Monitoring requirements under 326 IAC 2-7 applicable to the new Emergency Generators, identified as B359 and B 314 Unit 2 other than NSPS 40 CFR 60.42, Subpart JJJJ and NESHAP 40 CFR 63, Subpart ZZZZ.

Proposed Changes

The changes listed below have been made to Part 70 Operating Permit No. 097-30149-00072. Deleted language appears as ~~strikethroughs~~ and new language appears in **bold**:

Change 1: To incorporate the new Emergency Generators, the permit is modified as follows:

A.2 Emission Units and Pollution Control Equipment Summary [326 IAC 2-7-4(c)(3)] [326 IAC 2-7-5(15)]

This stationary source consists of the following emission units and pollution control devices:

...

(g) Emergency Generators and fire pumps including, but not limited to, those below:

Bldg.	Name & if Fire Pump	Manufacturer/ Model	Nominal Capacity	Units	Fuel	CI or SI	Date/Year Installed or Mfd.	NSPS New; Meet 60.4204	RICE MACT
...	...	...	...	...	...	...	...	...	...
B 314	**B314 Unit 2**	**Cummins 200 DSGAE**	**324**	**HP**	**No.2 oil**	**CI**	**2013**	**Yes; Yes**	**New**
...	...	...	...	...	...	...	...	...	...
B 359	**B 359 Fire House**	**TBD**	**0.25** **(383)**	**MW (HP)**	**Natural Gas**	**SI**	**2013**	**Yes Yes**	**New**
...	...	...	...	...	...	...	...	...	...

B.12 Permit Shield [326 IAC 2-7-15][326 IAC 2-7-20][326 IAC 2-7-12]

...

(b) In addition to the nonapplicability determinations set forth in Sections D of this permit, the IDEM, OAQ have made the following determinations regarding this source:

...

~~(7) **40 CFR 60, Subpart JJJJ - Stationary Spark Ignition Internal Combustion Engines:** This source is not subject to 40 CFR Part 60, Subpart JJJJ and 326 IAC 12, because any Spark Ignition Internal Combustion Engines at the source were manufactured before July 1, 2007 and are not fire pump engines.~~

...

...

SECTION E.1 EMISSIONS UNIT OPERATION CONDITIONS

Emissions Unit Description:

(g) Emergency Generators and fire pumps including those below:

Bldg.	Name & if Fire Pump	Manufacturer/ Model	Nominal Capacity	Units	Fuel	CI or SI	Date/Year Installed or Mfd.	NSPS New; Meet 60.4204	RICE MACT
...	...	...	...	...	...	...	...	...	...
B 314	**B314 Unit 2**	**Cummins 200 DSGAE**	**324**	**HP**	**No. 2 oil**	**CI**	**2013**	**Yes; Yes**	**New**
B 359	**B 359 Fire House**	**TBD**	**0.25** **(383)**	**MW (HP)**	**Natural Gas**	**SI**	**2013**	**Yes; Yes**	**New**

This is an affected source under 40 CFR 63, Subpart ZZZZ.

(The information describing the process contained in this emissions unit description box is descriptive information and does not constitute enforceable conditions.)

SECTION E.2 EMISSIONS UNIT OPERATION CONDITIONS

Emissions Unit Description:

(g) Emergency Generators and fire pumps including those below:

Bldg.	Name & if Fire Pump	Manufacturer/ Model	Nominal Capacity	Units	Fuel	CI or SI	Date/Year Installed or Mfd.	NSPS New; Meet 60.4204	RICE MACT
...	...	...	...	...	...	...	...	...	...
B314	**B314 Unit 2**	**Cummins 200DSGAE**	**324**	**HP**	**No. 2 oil**	**CI**	**2013**	**Yes; Yes**	**New**

This is an affected source under 40 CFR 60, Subpart IIII.

(The information describing the process contained in this emissions unit description box is descriptive information and does not constitute enforceable conditions.)

SECTION E.7 EMISSIONS UNIT OPERATION CONDITIONS

Emissions Unit Description: Emergency Generator

One (1) 0.25MW natural gas-fired emergency generator, identified as B359, permitted in 2013, with heat input capacity of 3.51 million British thermal units per hour, at a maximum of 500 hours per year of operations, using Catalytic Oxidizer as control, and exhausting to stack B359 Emergency Generator.

This is an affected source under 40 CFR 60, Subpart JJJJ.

(The information describing the process contained in this facility description box is descriptive information and does not constitute enforceable conditions.)

New Source Performance Standards (NSPS) Requirements [326 IAC 12-1]

E.7.1 General Provisions Relating to New Source Performance Standards [326 IAC 12-1] [40 CFR Part 60, Subpart A]

(a) Pursuant to 40 CFR 60.1, the Permittee shall comply with the provisions of 40 CFR Part 60 Subpart A – General Provisions, which are incorporated by reference as 326 IAC 12-1 for emergency generator B359 except as otherwise specified in 40 CFR Part 60, Subpart JJJJ.

(b) Pursuant to 40 CFR 60.19, the Permittee shall submit all required notifications and reports to:

Indiana Department of Environmental Management
Compliance and Enforcement Branch, Office of Air Quality
100 North Senate Avenue
MC 61-53 IGCN 1003
Indianapolis, Indiana 46204-2251

E.7.2 Standards of Performance for Stationary Spark Ignition Internal Combustion Engines [40 CFR Part 60, Subpart JJJJ] [326 IAC 12]

Pursuant to 40 CFR Part 60, Subpart JJJJ, the Permittee shall comply with the provisions of Standards of Performance for Stationary Spark Ignition Internal Combustion Engines, which are incorporated by reference as 326 IAC 12, for emergency generator

B359 as follows: The full text of Subpart JJJJ may be found in Attachment G to this permit.

(1) 40 CFR 60.4230(a)(4)(iii)
(2) 40 CFR 60.4233(e)
(3) 40 CFR 60.4234
(4) 40 CFR 60.4236(a)
(5) 40 CFR 60.4236(c)
(6) 40 CFR 60.4237
(7) 40 CFR 60.4243(b)
(8) 40 CFR 60.4243(d) and (e)
(9) 40 CFR 60.4243(f)
(10) 40 CFR 60.4243(g)
(11) 40 CFR 60.4245(a) and (b)
(12) 40 CFR 60.4246
(13) 40 CFR 60.4244 when 60.4243(f) applies

Change 2: The original production model for B130 was to manufacture a single product, a form of synthetic human insulin. As the market of diabetes medications has broadened, Lilly's product line now includes various forms of treatments, some or all of which may be produced in B130. In the course of planning for products, Lilly revisited the emission estimates and discovered that the VOC potential to emit in one filter operation was over 15 lb/day. As the filter is enclosed and the tank it vents through is covered, the process has conformed to the requirements of 326 IAC 8-5-3. However, in order to correct the terms of the permit and due to the potential variety of products that can be manufactured at B130, Lilly requested to add permit conditions that insure all applicable requirements are accurately reflected in the permit. Therefore, Section D.5 is changed as follows:

D.5.2 Synthesized Pharmaceutical Manufacturing Operations [326 IAC 8-5-3]

~~The bulk manufacture of pharmaceutical products takes place in the Building 130 Complex. However, there are no facilities in this area with the potential to emit greater than 15 pounds per day of VOC, therefore, the requirements of 326 IAC 8-5-3 are not included.~~

(a) Volatile organic compound emissions from all reactors, distillation operations, filters, crystallizers, centrifuges, and vacuum dryers, which have the potential to emit VOC greater than 15 pounds per day, shall be controlled by surface condensers or equivalent controls.

(1) If surface condensers are used, the condenser outlet gas temperature must not exceed minus twenty five degrees Celsius (-25 ^{o}C) when condensing VOC of vapor pressure greater than forty (40) kilo Pascals (5.8 pounds per square inch);

(2) If surface condensers are used, the condenser outlet gas temperature must not exceed minus fifteen degrees Celsius (-15 ^{o}C) when condensing VOC of vapor pressure greater than twenty (20) kilo Pascals (2.9 pounds per square inch);

(3) If surface condensers are used, the condenser outlet gas temperature must not exceed zero degrees Celsius (0 ^{o}C) when condensing VOC of vapor pressure greater than ten (10) kilo Pascals (1.5 pounds per square inch);

(4) If surface condensers are used, the condenser outlet gas temperature must not exceed ten degrees Celsius (10 ^{o}C) when condensing VOC of vapor pressure greater than seven (7) kilo Pascals (1 pound per square inch);

(5) If surface condensers are used, the condenser outlet gas temperature must not exceed twenty five degrees Celsius (25 ^{o}C) when condensing VOC of vapor pressure greater than three and a half (3.5) kilo Pascals (0.5 pound

per square inch);

(6) The vapor pressures listed in (1) through (5) above shall be measured at twenty degrees Celsius (20 °C).

(7) If equivalent controls are used, the Volatile Organic Compound emissions must be reduced by at least as much as they would be by using a surface condenser which meets the requirements of (1) through (5) above.

(b) Pursuant to 326 IAC 8-5-3(b)(2), VOC emissions from all air dryers and production equipment exhaust systems shall be reduced:

(1) by at least ninety percent (90%) if emissions are one hundred fifty (150) kilograms per day (three hundred thirty (330) pounds per day) or more of VOC; or

(2) to fifteen (15) kilograms per day (thirty three (33) pounds per day) or less if emissions are less than one hundred fifty (150) kilograms per day (three hundred thirty (330) pounds per day) of VOC.

(c) Pursuant to 326 IAC 8-5-3(b)(3)(A), the Permittee shall provide a vapor balance system or equivalent control that is at least 90% effective in reducing emissions from truck or railcar deliveries to storage tanks, which have the potential to emit VOC greater than 15 pounds per day and which have capacities greater than seven thousand five hundred (7,500) liters (two thousand (2,000) gallons) that store VOC with vapor pressures greater than twenty-eight (28) kiloPascals (four and one-tenth (4.1) pounds per square inch) at 20 degrees C.

(d) Pursuant to 326 IAC 8-5-3(b)(3)(B), the Permittee shall install a pressure / vacuum conservation vents set at plus or minus two-tenths (±0.2) kiloPascals on all storage tanks which have the potential to emit VOC greater than 15 pounds per day and that store VOC with vapor pressures greater than ten (10) kiloPascals (one and five-tenths (1.5) pounds per square inch) at 20 degrees C, unless a more effective control system is used.

(e) Pursuant to 326 IAC 8-5-3(b)(4), the Permittee shall enclose all centrifuges, rotary vacuum filters, and other filters which have the potential to emit VOC greater than 15 pounds per day and which have an exposed liquid surface, where the liquid contains VOC and exerts a total VOC vapor pressure of three and five-tenths (3.5) kiloPascals (five-tenths (0.5) pounds per square inch) or more at 20 degrees C.

(f) Pursuant to 326 IAC 8-5-3(b)(5), the Permittee shall install covers on all inprocess tanks which have the potential to emit VOC greater than 15 pounds per day and which contain a volatile organic compound at any time. These covers must remain closed, unless production, sampling, maintenance, or inspection procedures require operator access.

(g) Pursuant to 326 IAC 8-5-3(b)(6), the Permittee shall, for the emission units which have the potential to emit VOC greater than 15 pounds per day, repair all leaks from which a liquid, containing VOC, can be observed running or dripping. The repair shall be completed the first time the equipment is off line for a period of time long enough to complete the repair.

D.5.4 Preventive Maintenance Plan [326 IAC 2-7-5(12)]

A Preventive Maintenance Plan (PMP) is required for emission units and control devices subject to Condition D.5.2 - Synthesized Pharmaceutical Manufacturing Operations [326 IAC 8-5-3]. Section B - Preventive Maintenance Plan contains the Permittee's obligations with regard to the preventive maintenance plan required by this condition.

Compliance Monitoring Requirements [326 IAC 2-7-5(1)] [326 IAC 2-7-6(1)]

D.5.5 Synthesized Pharmaceutical Manufacturing Operations [326 IAC 8-5-3]

(a) For emitting units, subject to Condition D.5.2, controlled by a surface condenser, the Permittee shall record the condenser outlet gas temperature at least once per batch when the emitting unit is in operation.

(b) For emitting units, subject to Condition D.5.2, controlled by a scrubber, the Permittee shall record the recirculation flow rate at least once per batch when the emitting unit is in operation.

D.5.6 Instrument Specifications [326 IAC 2-1.1-11] [326 IAC 2-7-5(3)] [326 IAC 2-7-6(1)]

(a) The instrument employed for the measurement of temperature as required by Conditions D.5.2 and D.5.5 shall have a scale such that the expected normal reading shall be no less than five percent (5%) of full scale and be accurate within plus or minus 2.5°C.

(b) The instrument employed for the measurement of flowrate as required by Condition D.5.5 shall be accurate within plus or minus ten percent (10%) of design flow rate.

(c) The Permittee may request that IDEM, OAQ approve the use of an instrument that does not meet the above specifications provided the Permittee can demonstrate that an alternative instrument specification will adequately ensure compliance with permit conditions requiring the measurement.

Record Keeping and Reporting Requirements [326 IAC 2-7-5(3)] [326 IAC 2-7-19]

D.5.7 Record Keeping Requirements

(a) To document the compliance status with Conditions D.5.2 and D.5.5, the Permittee is required to:

(1) Keep an on-site log of emitting units subject to Condition D.5.2 the condensing VOC vapor pressure, the respective control device, and the applicable limitation.

(2) Keep records of once per batch temperature as per Condition D.5.5 for surface condensers subject to Condition D.5.2.

(3) Keep records of once per batch liquid flow rates as per Condition D.5.5 for scrubbers subject to Condition D.5.2.

(b) Section C - General Record Keeping Requirements contains the Permittee's obligations with regard to the record keeping required by this condition.

Change 3: To correct the scope of the synthetic minor limit in Condition D.4.1 and the LDAR requirements in Condition D.4.2, the permit is changed as follows:

D.4.1 Prevention of Significant Deterioration Minor Limit [326 IAC 2-2][40 CFR 52.21]

Pursuant to Permit Number CP 910072-01 issued on October 2, 1991 and Amendment A072-0001 issued on June 3, 1997, VOC emissions from Building**s** 132**, 133 and 138** are limited to less than 40 tons per 12 consecutive month period with compliance determined at the end of each month such that 326 IAC 2-2 is not applicable.

D.4.2 Leak Detection and Repair [326 IAC 2-2] [40 CFR 52.21] [40 CFR 63 Subpart GGG]

Pursuant to CP-910072-01 and Amendment A072-0001, the Permittee shall implement leak detection and repair (LDAR) for pumps, valves, and connectors in VOC service **in Buildings 132, 133, and 138**. The LDAR requirements are described in Conditions E.3.3. In VOC service means that a piece of equipment either contains or contacts a fluid (liquid or gas) that is at least ten (10) percent by weight a volatile organic compound (VOC).

(a) On or before December 31, 2011, the Permittee shall complete all required monitoring for the current monitoring period, and shall close the current monitoring periods for valves and connectors on December 31, 2011.

(b) The Permittee shall begin new monitoring periods for valves and for connectors on January 1, 2012.

(c) The Permittee may revise the "process or group of processes" used for leak rate calculations on January 1, 2012.

Change 4: To clarify that 326 IAC 8-5-3 applies only to equipment with potential to emit VOC at greater than 15 pounds per day, Condition D.4.4 is modified as follows:

D.4.4 Synthesized Pharmaceutical Manufacturing Operations [326 IAC 8-5-3]

...

(b) Pursuant to 326 IAC 8-5-3(b)(2), VOC emissions from all air dryers and production equipment exhaust systems **which have the potential to emit VOC greater than 15 pounds day** shall be reduced:

(1) by at least ninety percent (90%) if emissions are one hundred fifty (150) kilograms per day (three hundred thirty (330) pounds per day) or more of VOC; or

(2) to fifteen (15) kilograms per day (thirty three (33) pounds per day) or less if emissions are less than one hundred fifty (150) kilograms per day (three hundred thirty (330) pounds per day) of VOC.

Change 5: To correct a typographical error, the permit's attachments are changed as follows:

Attachment A
to a Part 70 Operating Permit
40 CFR 63, Subpart ZZZZ—National Emission Standards for Hazardous Air Pollutants for Stationary Reciprocating Internal Combustion Engines:

Source Background and Description

Source Name:	Eli Lilly and Company, Lilly Technology Center
Source Location:	1555 South Harding Street, Indianapolis, IN 46168
County:	Marion
SIC Code:	2833, 2834
Permit Renewal No.:	T097-30149-00072
Permit Reviewer:	Josiah Balogun

The following is believed to be the correct text of the sections cited. However, in the event there is any discrepancy between this material and that of these regulatory sections as they appear in the

Code of Federal Regulations, July 1, ~~2009~~**2011** edition (the CFR), as adopted by reference by IDEM at 326 IAC 1-1-3, the language of the CFR shall govern.
...

Attachment B
to a Part 70 Operating Permit
40 CFR 60, Subpart IIII — Standards of Performance for Stationary Compression Ignition Internal Combustion Engines

Source Background and Description

Source Name:	Eli Lilly and Company, Lilly Technology Center
Source Location:	1555 South Harding Street, Indianapolis, IN 46168
County:	Marion
SIC Code:	2833, 2834
Permit Renewal No.:	T097-30149-00072
Permit Reviewer:	Josiah Balogun

The following is believed to be the correct text of the sections cited. However, in the event there is any discrepancy between this material and that of these regulatory sections as they appear in the Code of Federal Regulations, July 1, ~~2009~~**2011** edition (the CFR), as adopted by reference by IDEM at 326 IAC 1-1-3, the language of the CFR shall govern.
...

Attachment C – Applicable Portions of the National Emission Standards for Pharmaceuticals Production
[40 CFR Part 63, Subpart GGG] [326 IAC 20]

Source Background and Description

Source Name:	Eli Lilly and Company, Lilly Technology Center
Source Location:	1555 South Harding Street, Indianapolis, IN 46168
County:	Marion
SIC Code:	2833, 2834
Permit Renewal No.:	T097-30149-00072
Permit Reviewer:	Josiah Balogun

The following is believed to be the correct text of the sections cited. However, in the event there is any discrepancy between this material and that of these regulatory sections as they appear in the Code of Federal Regulations, July 1, ~~2009~~**2011** edition (the CFR), as adopted by reference by IDEM at 326 IAC 1-1-3, the language of the CFR shall govern.
...

Attachment C – Applicable Portions of the National Emission Standards for Pharmaceuticals Production
[40 CFR Part 63, Subpart GGG] [326 IAC 20]

Source Background and Description

Source Name:	Eli Lilly and Company, Lilly Technology Center
Source Location:	1555 South Harding Street, Indianapolis, IN 46168

County:	Marion
SIC Code:	2833, 2834
Permit Renewal No.:	T097-30149-00072
Permit Reviewer:	Josiah Balogun

The following is believed to be the correct text of the sections cited. However, in the event there is any discrepancy between this material and that of these regulatory sections as they appear in the Code of Federal Regulations, July 1, ~~2009~~**2011** edition (the CFR), as adopted by reference by IDEM at 326 IAC 1-1-3, the language of the CFR shall govern.
...

Attachment D – Applicable Portions of the National Emission Standards for Equipment Leaks (Fugitives Emissions Sources) [40 CFR Part 61, Subpart V] [326 IAC 14]

Source Description and Location

Source Name:	Eli Lilly and Company, Lilly Technology Center
Source Location:	1555 South Harding Street, Indianapolis, IN 46168
County:	Marion
SIC Code:	2833, 2834
Permit Renewal No.:	T097-30149-00072
Permit Reviewer:	Josiah Balogun

The following is believed to be the correct text of the sections cited. However, in the event there is any discrepancy between this material and that of these regulatory sections as they appear in the Code of Federal Regulations, July 1, ~~2009~~**2011** edition (the CFR), as adopted by reference by IDEM at 326 IAC 1-1-3, the language of the CFR shall govern.
...

Attachment E
to a Part 70 Operating Permit
40 CFR 63, Subpart GGGGG— National Emission Standards for Hazardous Air Pollutants: Site Remediation:

Source Background and Description

Source Name:	Eli Lilly and Company, Lilly Technology Center
Source Location:	1555 South Harding Street, Indianapolis, IN 46168
County:	Marion
SIC Code:	2833, 2834
Permit Renewal No.:	T097-30149-00072
Permit Reviewer:	Josiah Balogun

The following is believed to be the correct text of the sections cited. However, in the event there is any discrepancy between this material and that of these regulatory sections as they appear in the Code of Federal Regulations, July 1, ~~2009~~**2011** edition (the CFR), as adopted by reference by IDEM at 326 IAC 1-1-3, the language of the CFR shall govern.
...

Attachment F
to a Part 70 Operating Permit
40 CFR 61, Subpart FF— National Emission Standards for Benzene Waste Operations

Source Background and Description

Source Name:	Eli Lilly and Company, Lilly Technology Center
Source Location:	1555 South Harding Street, Indianapolis, IN 46168
County:	Marion
SIC Code:	2833, 2834
Permit Renewal No.:	T097-30149-00072
Permit Reviewer:	Josiah Balogun

The following is believed to be the correct text of the sections cited. However, in the event there is any discrepancy between this material and that of these regulatory sections as they appear in the Code of Federal Regulations, July 1, ~~2009~~**2011** edition (the CFR), as adopted by reference by IDEM at 326 IAC 1-1-3, the language of the CFR shall govern.

Change 6: On October 27, 2010, the Indiana Air Pollution Control Board issued revisions to 326 IAC 2. These revisions resulted in changes to the rule cites listed in the permit. These changes are not changes to the underlying provisions. The change is only to cite of these rules in Section A - General Information, Section A - Emission Units and Pollution Control Equipment Summary, Section A - Specifically Regulated Insignificant Activities, Section B - Preventative Maintenance Plan, Section B - Emergency Provisions, Section B - Operational Flexibility, Section C - Risk Management Plan, the Facility Descriptions, and Section D - Preventative Maintenance Plan. Therefore, the permit is changed as follows:

A.1 General Information [326 IAC 2-7-4(c)][326 IAC 2-7-5**(14)** ~~(15)~~][326 IAC 2-7-1(22)]

***

A.2 Emission Units and Pollution Control Equipment Summary [326 IAC 2-7-4(c)(3)][326 IAC 2-7-5**(14)** ~~(15)~~]

***

A.3 Specifically Regulated Insignificant Activities [326 IAC 2-7-1(21)][326 IAC 2-7-4(c)] 326 IAC 2-7-5(**14)** ~~(15)~~]

***

A.4 Insignificant Activities [326 IAC 2-7-1(21)] [326 IAC 2-7-4(c)] [326 IAC 2-7-5**(14)**~~(15)~~]

***

B.10 Preventive Maintenance Plan [326 IAC 2-7-5~~(1),(3) and (13)~~ **(12)**] [~~326 IAC 2-7-6(1) and (6)~~][326 IAC 1-6-3]

***

B.11 Emergency Provisions [326 IAC 2-7-16]

***

(e) The Permittee seeking to establish the occurrence of an emergency shall make records available upon request to ensure that failure to implement a PMP did not cause or contribute to an exceedance of any limitations on emissions. However, IDEM, OAQ may require that the Preventive Maintenance Plans required under 326 IAC 2-7-4(c)~~(9)~~ **(8)** be revised in response to an emergency.

***

B.19 Operational Flexibility [326 IAC 2-7-20][326 IAC 2-7-10.5]

(a) The Permittee may make any change or changes at the source that are described in 326 IAC 2-7-20(b)~~,~~ **or** (c)~~, or (e)~~ without a prior permit revision, if each of the following conditions is met:

***

(5) The Permittee maintains records on-site, on a rolling five (5) year basis, which document all such changes and emission trades that are subject to 326 IAC 2-7-20(b)~~,~~ **or** (c)~~, or (e)~~. The Permittee shall make such records available, upon reasonable request, for public review.

Such records shall consist of all information required to be submitted to IDEM, OAQ in the notices specified in 326 IAC 2-7-20(b)(1)~~,~~ **and** (c)(1)~~, and (e)(2)~~.

***

C.13 Risk Management Plan [326 IAC 2-7-5(**11**~~12~~)] [40 CFR 68]

***

D.2.4 Preventive Maintenance Plan [326 IAC 2-7-5(**12**~~13~~)]

***

D.4.6 Preventive Maintenance Plan [326 IAC 2-7-5(**12**~~13~~)]

***

Change 7: On October 27, 2010, the Indiana Air Pollution Control Board issued revisions to 326 IAC 2. These revisions included the incorporation of the U.S. EPA's definition of reasonable possibility. The permit previously cited to the EPA definition. Also, the revisions resulted in changes to other rule cites listed in the permit. Neither of these changes are changes to the underlying provisions. The change is only to the citation of these rules in Section C - General Reporting and Section C - General Recordkeeping.

C.17 General Record Keeping Requirements [326 IAC 2-7-5(3)] [326 IAC 2-7-6] [326 IAC 2-2][326 IAC 2-3]

***

(c) If there is a reasonable possibility (as defined in ~~40 CFR 51.165(a)(6)(vi)(A), 40 CFR 51.165(a)(6)(vi)(B), 40 CFR 51.166(r)(6)(vi)(a), and/or 40 CFR 51.166(r)(6)(vi)(b)~~ **326 IAC 2-2-8 (b)(6)(A), 326 IAC 2-2-8 (b)(6)(B), 326 IAC 2-3-2 (l)(6)(A), and/or 326 IAC 2-3-2 (l)(6)(B)**) that a "project" (as defined in 326 IAC 2-2-1(~~qq~~ **oo**) and/or 326 IAC 2-3-1(~~ll~~ **jj**)) at an existing emissions unit, other than projects at a source with a Plantwide Applicability Limitation (PAL), which is not part of a "major modification" (as defined in 326 IAC 2-2-1(~~ee~~ **dd**) and/or 326 IAC 2-3-1(~~z~~ **y**)) may result in significant emissions increase and the Permittee elects to utilize the "projected actual emissions" (as defined in 326 IAC 2-2-1(~~rr~~ **pp**) and/or 326 IAC 2-3-1(~~mm~~ **kk**)), the Permittee shall comply with **the** following:

(1) Before beginning actual construction of the "project" (as defined in 326 IAC 2-2-1(~~qq~~ **oo**) and/or 326 IAC 2-3-1(~~ll~~ **jj**)) at an existing emissions unit, document and maintain the following records:

***

(C) A description of the applicability test used to determine that the project is not a major modification for any regulated NSR pollutant, including:

***

(iii) Amount of emissions excluded under section 326 IAC 2-2-1(~~rr~~ **pp**)(2)(A)(iii) and/or 326 IAC 2-3-1 (~~mm~~ **kk**)(2)(A)(iii); and

***

(d) If there is a reasonable possibility (as defined in ~~40 CFR 51.165(a)(6)(vi)(A) and/or 40 CFR 51.166(r)(6)(vi)(a)~~ **326 IAC 2-2-8 (b)(6)(A) and/or 326 IAC 2-3-2 (l)(6)(A)**) that a "project" (as defined in 326 IAC 2-2-1(~~qq~~ **oo**) and/or 326 IAC 2-3-1(~~ll~~ **jj**)) at an existing emissions unit, other than projects at a source with a Plantwide Applicability Limitation (PAL), which is not part of a "major modification" (as defined in 326 IAC 2-2-1(~~ee~~ **dd**) and/or 326 IAC 2-3-1(~~z~~ **y**)) may result in significant emissions increase and the Permittee elects to utilize the "projected actual emissions" (as defined in 326 IAC 2-2-1(~~rr~~ **pp**) and/or 326 IAC 2-3-1(~~mm~~ **kk**)), the Permittee shall comply with **the** following:

***

C.18 General Reporting Requirements [326 IAC 2-7-5(3)(C)] [326 IAC 2-1.1-11] [326 IAC 2-2] [326 IAC 2-3]

***

(f) If the Permittee is required to comply with the recordkeeping provisions of (d) in Section C - General Record Keeping Requirements for any "project" (as defined in 326 IAC 2-2-1 (~~qq~~ **oo**) and/or 326 IAC 2-3-1 (~~ll~~ **jj**)) at an existing emissions unit, and the project meets the following criteria, then the Permittee shall submit a report to:***

(1) The annual emissions, in tons per year, from the project identified in (c)(1) in Section C- General Record Keeping Requirements exceed the baseline actual emissions, as documented and maintained under Section C- General Record Keeping Requirements (c)(1)(C)(i), by a significant amount, as defined in 326 IAC 2-2-1 (~~xx~~ **ww**) and/or 326 IAC 2-3-1 (~~qq~~ **pp**), for that regulated NSR pollutant, and

Change 8: TSD Language: IDEM, OAQ has clarified the Permittee's responsibility with regards to record keeping.

C.17 General Record Keeping Requirements [326 IAC 2-7-5(3)] [326 IAC 2-7-6] [326 IAC 2-2] [326 IAC 2-3]

(a) Records of all required monitoring data, reports and support information required by this permit shall be retained for a period of at least five (5) years from the date of monitoring sample, measurement, report, or application. **Support information includes the following:**

(AA) All calibration and maintenance records.

(BB) All original strip chart recordings for continuous monitoring instrumentation.

(CC) Copies of all reports required by the Part 70 permit.

Records of required monitoring information include the following:

(AA) The date, place, as defined in this permit, and time of sampling or measurements.

(BB) The dates analyses were performed.

(CC) The company or entity that performed the analyses.

(DD) The analytical techniques or methods used.

(EE) The results of such analyses.

(FF) The operating conditions as existing at the time of sampling or measurement.

These records shall be physically present or electronically accessible at the source location for a minimum of three (3) years. The records may be stored elsewhere for the remaining two (2) years as long as they are available upon request. If the Commissioner makes a request for records to the Permittee, the Permittee shall furnish the records to the Commissioner within a reasonable time.

(b) Unless otherwise specified in this permit, for all record keeping requirements not already legally required, the Permittee shall be allowed up to ninety (90) days from the date of permit issuance or the date of initial start-up, whichever is later, to begin such record keeping.

Change 9: TSD Language: IDEM, OAQ has clarified the interaction of the Quarterly Deviation and Compliance Monitoring Report and the Emergency Provisions.

C.18 General Reporting Requirements [326 IAC 2-7-5(3)(C)] [326 IAC 2-1.1-11] [326 IAC 2-2] [326 IAC 2-3]

(a) The Permittee shall submit the attached Quarterly Deviation and Compliance Monitoring Report or its equivalent. **Proper notice submittal under Section B –Emergency Provisions satisfies the reporting requirements of this paragraph**. Any deviation from permit requirements, the date(s) of each deviation, the cause of the deviation, and the response steps taken must be reported except that a deviation required to be reported pursuant to an applicable requirement that exists independent of this permit, shall be reported according to the schedule stated in the applicable requirement and does not need to be included in this report. This report shall be submitted not later than thirty (30) days after the end of the reporting period. The Quarterly Deviation and Compliance Monitoring Report shall include a certification that meets the requirements of 326 IAC 2-7-6(1) by a "responsible official" as defined by 326 IAC 2-7-1(34). A deviation is an exceedance of a permit limitation or a failure to comply with a requirement of the permit.

****

INDIANA DEPARTMENT OF ENVIRONMENTAL MANAGEMENT
OFFICE OF AIR QUALITY
COMPLIANCE AND ENFORCEMENT BRANCH
PART 70 OPERATING PERMIT
QUARTERLY DEVIATION AND COMPLIANCE MONITORING REPORT

Source Name: Eli Lilly and Company, Lilly Technology Center
Source Address: 1555 South Harding Street, Indianapolis, Indiana 46168
Part 70 Permit No.: T097-30149-00072

Months: _____ to _____ Year: _____

Page 1 of 2

This report shall be submitted quarterly based on a calendar year. **Proper notice submittal under Section B –Emergency Provisions satisfies the reporting requirements of paragraph (a) of Section C-General Reporting.** Any deviation from the requirements of this permit, the date(s) of each deviation, the probable cause of the deviation, and the response steps taken must be reported. A deviation required to be reported pursuant to an applicable requirement that exists independent of the permit, shall be reported according to the schedule stated in the applicable requirement and does not need to be included in this report. Additional pages may be attached if necessary. If no deviations occurred, please specify in the box marked "No deviations occurred this reporting period".

***

Change 6: For additional clarification, Section E.4 is changed as follows:

SECTION E.4 EMISSIONS UNIT OPERATION CONDITIONS

Emissions Unit Description:

Manufacture of bulk pharmaceutical products (Building 358) by:

(1) protein isolation with a carbon adsorber for VOC and HAP control with laboratory support;
(2) chemical synthesis,

units subject to BACT [326 IAC 8-1-6].

(The information describing the process contained in this emissions unit description box is descriptive information and does not constitute enforceable conditions.)

National Emission Standards For Hazardous Air Pollutants [40 CFR 61]

E.4.1 National Emission Standards for Equipment Leaks (Fugitive Emission Sources) [40 CFR 61, Subpart V] [326 IAC 14-8]

Where required by specific conditions in Section D of this permit, ~~P~~pursuant to 40 CFR 61, Subpart V, the Permittee shall comply with the provisions of the National Emission Standards for Equipment Leaks (Fugitive Emission Sources) which are incorporated by reference as 326 IAC 14-8 as specified as follows:

40 CFR 61.242-2
40 CFR 61.242-3
40 CFR 61.242-4
40 CFR 61.242-5
40 CFR 61.242-6
40 CFR 61.242-7
40 CFR 61.242-8
40 CFR 61.242-10
40 CFR 61.243-1
40 CFR 61.243-2

Change 10: On November 3, 2011, the Indiana Air Pollution Control Board issued a revision to 326 IAC 2. The revision resulted in a change to the rule site of the “responsible official” definition. Therefore, the permit is changed as follows:

B.8 Certification [326 IAC 2-7-4(f)][326 IAC 2-7-6(1)][326 IAC 2-7-5(3)(C)]

(a) A certification required by this permit meets the requirements of 326 IAC 2-7-6(1) if:

(1) it contains a certification by a "responsible official" as defined by 326 IAC 2-7-1(~~34~~**35**), and

(2) the certification states that, based on information and belief formed after reasonable inquiry, the statements and information in the document are true, accurate, and complete.

(b) The Permittee may use the attached Certification Form, or its equivalent with each submittal requiring certification. One (1) certification may cover multiple forms in one (1) submittal.

(c) A "responsible official" is defined at 326 IAC 2-7-1(~~34~~**35**).

B.9 Annual Compliance Certification [326 IAC 2-7-6(5)]

...

The submittal by the Permittee does require a certification that meets the requirements of 326 IAC 2-7-6(1) by a "responsible official" as defined by 326 IAC 2-7-1(~~34~~**35**).

B.10 Preventive Maintenance Plan [326 IAC 2-7-5(12)][326 IAC 1-6-3]

...

(b) If required by specific condition(s) in Section D of this permit where no PMP was previously required, the Permittee shall prepare and maintain Preventive Maintenance Plans (PMPs) no later than ninety (90) days after issuance of this permit or ninety (90) days after initial start-up, whichever is later, including the following information on each facility:

...

The PMP extension notification does not require a certification that meets the requirements of 326 IAC 2-7-6(1) by a "responsible official" as defined by 326 IAC 2-7-1(~~34~~**35**).

...

(c) A copy of the PMPs shall be submitted to IDEM, OAQ upon request and within a reasonable time, and shall be subject to review and approval by IDEM, OAQ. IDEM, OAQ may require the Permittee to revise its PMPs whenever lack of proper maintenance causes or is the primary contributor to an exceedance of any limitation on emissions. The PMPs and their submittal do not require a certification that meets the requirements of 326 IAC 2-7-6(1) by a "responsible official" as defined by 326 IAC 2-7-1(~~34~~**35**).

...

B.11 Emergency Provisions [326 IAC 2-7-16]

...

(b) An emergency, as defined in 326 IAC 2-7-1(12), constitutes an affirmative defense to an action brought for noncompliance with a technology-based emission limitation if the affirmative defense of an emergency is demonstrated through properly signed, contemporaneous operating logs or other relevant evidence that describe the following:

...

(5) For each emergency lasting one (1) hour or more, the Permittee submitted the attached Emergency Occurrence Report Form or its equivalent, either by mail or facsimile to:
Indiana Department of Environmental Management
Compliance and Enforcement Branch, Office of Air Quality
100 North Senate Avenue
MC 61-53 IGCN 1003
Indianapolis, Indiana 46204-2251

...

The notification which shall be submitted by the Permittee does not require a certification that meets the requirements of 326 IAC 2-7-6(1) by a "responsible official" as defined by 326 IAC 2-7-1(~~34~~**35**).

(6) The Permittee immediately took all reasonable steps to correct the emergency.

...

B.15 Permit Modification, Reopening, Revocation and Reissuance, or Termination [326 IAC 2-7-5(6)(C)][326 IAC 2-7-8(a)][326 IAC 2-7-9]

(a) This permit may be modified, reopened, revoked and reissued, or terminated for cause. The filing of a request by the Permittee for a Part 70 Operating Permit modification, revocation and reissuance, or termination, or of a notification of planned changes or anticipated noncompliance does not stay any condition of this permit.
[326 IAC 2-7-5(6)(C)] The notification by the Permittee does require a certification that meets the requirements of 326 IAC 2-7-6(1) by a "responsible official" as defined by 326 IAC 2-7-1(~~34~~**35**).

...

B.16 Permit Renewal [326 IAC 2-7-3][326 IAC 2-7-4][326 IAC 2-7-8(e)]

(a) The application for renewal shall be submitted using the application form or forms prescribed by IDEM, OAQ and shall include the information specified in 326 IAC 2-7-4. Such information shall be included in the application for each emission unit at this source, except those emission units included on the trivial or insignificant activities list contained in 326 IAC 2-7-1(21) and 326 IAC 2-7-1(40). The renewal application does require a certification that meets the requirements of 326 IAC 2-7-6(1) by a "responsible official" as defined by 326 IAC 2-7-1(~~34~~**35**).
Request for renewal shall be submitted to:

Indiana Department of Environmental Management
Permit Administration and Support Section, Office of Air Quality
100 North Senate Avenue
MC 61-53 IGCN 1003
Indianapolis, Indiana 46204-2251

...

B.17 Permit Amendment or Modification [326 IAC 2-7-11][326 IAC 2-7-12] [40 CFR 72]

...

(b) Any application requesting an amendment or modification of this permit shall be submitted to:

Indiana Department of Environmental Management
Permit Administration and Support Section, Office of Air Quality
100 North Senate Avenue
MC 61-53 IGCN 1003
Indianapolis, Indiana 46204-2251

Any such application does require a certification that meets the requirements of 326 IAC 2-7-6(1) by a "responsible official" as defined by 326 IAC 2-7-1(~~34~~**35**).

...

B.19 Operational Flexibility [326 IAC 2-7-20][326 IAC 2-7-10.5]

...

(b) The Permittee may make Section 502(b)(10) of the Clean Air Act changes (this term is defined at 326 IAC 2-7-1(36)) without a permit revision, subject to the constraint of 326 IAC 2-7-20(a). For each such Section 502(b)(10) of the Clean Air Act change, the required written notification shall include the following:

(1) A brief description of the change within the source;

(2) The date on which the change will occur;

(3) Any change in emissions; and

(4) Any permit term or condition that is no longer applicable as a result of the change.

The notification which shall be submitted is not considered an application form, report or compliance certification. Therefore, the notification by the Permittee does not require a certification that meets the requirements of 326 IAC 2-7-6(1) by a "responsible official" as defined by 326 IAC 2-7-1(~~34~~**35**).

...

B.22 Transfer of Ownership or Operational Control [326 IAC 2-7-11]

...

(b) Any application requesting a change in the ownership or operational control of the source shall contain a written agreement containing a specific date for transfer of permit responsibility, coverage and liability between the current and new Permittee. The application shall be submitted to:
Indiana Department of Environmental Management
Permit Administration and Support Section, Office of Air Quality
100 North Senate Avenue
MC 61-53 IGCN 1003
Indianapolis, Indiana 46204-2251

Any such application does require a certification that meets the requirements of 326 IAC 2-7-6(1) by a "responsible official" as defined by 326 IAC 2-7-1(~~34~~**35**).

...

C.7 Performance Testing [326 IAC 3-6]

(a) For performance testing required by this permit, a test protocol, except as provided elsewhere in this permit, shall be submitted to:
Indiana Department of Environmental Management
Compliance and Enforcement Branch, Office of Air Quality
100 North Senate Avenue
MC 61-53 IGCN 1003
Indianapolis, Indiana 46204-2251

no later than thirty-five (35) days prior to the intended test date. The protocol submitted by the Permittee does not require a certification that meets the requirements of 326 IAC 2-7-6(1) by a "responsible official" as defined by 326 IAC 2-7-1(~~34~~**35**).

(b) The Permittee shall notify IDEM, OAQ of the actual test date at least fourteen (14) days prior to the actual test date. The notification submitted by the Permittee does not require a certification that meets the requirements of 326 IAC 2-7-6(1) by a "responsible official" as defined by 326 IAC 2-7-1(~~34~~**35**).

...

C.9 Compliance Monitoring [326 IAC 2-7-5(3)][326 IAC 2-7-6(1)]

...

The notification which shall be submitted by the Permittee does require a certification that meets the requirements of 326 IAC 2-7-6(1) by a "responsible official" as defined by 326 IAC 2-7-1(~~34~~**35**).

...

C.15 Actions Related to Noncompliance Demonstrated by a Stack Test [326 IAC 2-7-5][326 IAC 2-7-6]

...

The response action documents submitted pursuant to this condition do require a certification that meets the requirements of 326 IAC 2-7-6(1) by a "responsible official" as defined by 326 IAC 2-7-1(~~34~~**35**).

C.16 Emission Statement [326 IAC 2-7-5(3)(C)(iii)][326 IAC 2-7-5(7)][326 IAC 2-7-19(c)][326 IAC 2-6]

...

The emission statement does require a certification that meets the requirements of 326 IAC 2-7-6(1) by a "responsible official" as defined by 326 IAC 2-7-1(~~34~~**35**).

C.18 General Reporting Requirements [326 IAC 2-7-5(3)(C)] [326 IAC 2-1.1-11] [326 IAC 2-2]

(a) The Permittee shall submit the attached Quarterly Deviation and Compliance Monitoring Report or its equivalent. Proper notice submittal under Section B –Emergency Provisions satisfies the reporting requirements of this paragraph. Any deviation from permit requirements, the date(s) of each deviation, the cause of the deviation, and the response steps taken must be reported except that a deviation required to be reported pursuant to an applicable requirement that exists independent of this permit, shall be reported according to the schedule stated in the applicable requirement and does not need to be included in this report. This report shall be submitted not later than thirty (30) days after the end of the reporting period. The Quarterly Deviation and Compliance Monitoring Report shall include a certification that meets the requirements of 326 IAC 2-7-6(1) by a "responsible official" as defined by 326 IAC 2-7-1(~~34~~**35**). A deviation is an exceedance of a permit limitation or a failure to comply with a requirement of the permit.

...

(d) Unless otherwise specified in this permit, all reports required in Section D and Section E of this permit shall be submitted within thirty (30) days of the end of the reporting period. Unless otherwise specified in this permit, all reports shall include a certification that meets the requirements of 326 IAC 2-7-6(1) by a "responsible official" as defined by 326 IAC 2-7-1(~~34~~**35**).

(e) Reporting periods are based on calendar years, unless otherwise specified in this permit. For the purpose of this permit “calendar year” means the twelve (12) month period from January 1 to December 31 inclusive.

...

D.1.6 Reporting Requirements

(a) The Permittee shall submit an annual summary of volatile organic compounds (VOC) emissions to document the compliance status with Condition D.1.1 of this permit, using the reporting form located at the end of this permit, or its equivalent. This annual report submitted by the Permittee does require a certification by a “responsible official” as defined by 326 IAC 2-7-1(~~34~~**35**). Section C - General Reporting Requirements contains the Permittee's obligations with regard to the reporting required by this condition.

...

Conclusion and Recommendation

The operation of this proposed modification shall be subject to the conditions of the attached proposed Part 70 Significant Permit Modification. The staff recommend to the Commissioner that this Part 70 Significant Permit Modification be approved.

IDEM Contact

(a) Questions regarding this proposed permit can be directed to Ghassan Shalabi at the Indiana Department Environmental Management, Office of Air Quality, Permits Branch, 100 North Senate Avenue, MC 61-53 IGCN 1003, Indianapolis, Indiana 46204-2251 or by telephone at 317-234-5378 or toll free at 1-800-451-6027 extension 4-5378.

(b) A copy of the findings is available on the Internet at: http://www.in.gov/ai/appfiles/idem-caats/

(c) For additional information about air permits and how the public and interested parties can participate, refer to the IDEM's Guide for Citizen Participation and Permit Guide on the Internet at: www.idem.in.gov

Emissions Summary

Company Name: Eli Lilly and Company, Lilly Technology Center
Address City IN Zip: 1555 South Harding Street, Indianapolis, IN 46168
Permit Number: 097-32466-00072
Reviewer: Ghassan Shalabi
Date: 15-Aug-2012

Modification Emissions (Emergency Generator B359 Unit 2 and Emergency Generator B314)

Pollutant	TPY
PM	0.06
PM10	0.06
PM2.5	0.06
SO2	0.04
NOX	2.58
VOC	0.08
CO	3.40
GHG	143.88
Single HAP	0.02
Total HAPs	0.03

Appendix A: Emission Calculations
Reciprocating Internal Combustion Engines - Natural Gas
4-Stroke Rich-Burn (4SRB) Engines

New B359 Emergency Generator

Company Name: Eli Lilly and Company, Lilly Technology Center
Address City IN Zip: 1555 South Harding Street, Indianapolis, IN 46168
Permit Number: 097-32466-00072
Reviewer: Ghassan Shalabi
Date: 15-Aug-2012

Maximum Heat Input Capacity (MMBtu/hr)	3.51
Maximum Hours Operated per Year (hr/yr)*	500
Potential Fuel Usage (MMBtu/yr)	1755
High Heat Value (MMBtu/MMscf)	1020
Potential Fuel Usage (MMcf/yr)	1.72

	Pollutant						
Criteria Pollutants	PM	PM10	PM2.5	SO2	NOx	VOC	CO
Emission Factor (lb/MMBtu)	9.91E-03	9.50E-03	9.50E-03	5.88E-04	2.21E+00	2.96E-02	3.72E+00
Potential Emissions (tons/yr)	0.009	0.01	0.01	0.0005	1.94	0.03	3.26

PM10(filtrerable) = PM2.5 (filterable)

Hazardous Air Pollutants (HAPs)

Pollutant	Emission Factor (lb/MMBtu)	Potential Emissions (tons/yr)
Acetaldehyde	2.79E-03	2.45E-03
Acrolein	2.63E-03	2.31E-03
Benzene	1.58E-03	1.39E-03
1,3-Butadiene	6.63E-04	5.82E-04
Formaldehyde	2.05E-02	1.80E-02
Methanol	3.06E-03	2.69E-03
Total PAH***	1.41E-04	1.24E-04
Toluene	5.58E-04	4.90E-04
Xylene	1.95E-04	1.71E-04
	Total	**0.028**

Criteria Pollutants and HAPs Emission factors are from AP-42 (07/2000), Table 3.2-3 AP-42

Appendix A: Emission Calculations

Company Name: Eli Lilly and Company, Lilly Technology Center
Address City IN Zip: 1555 South Harding Street, Indianapolis, IN 46168
Permit Number: 097-32466-00072
Reviewer: Ghassan Shalabi
Date: 15-Aug-2012

HAP pollutants consist of the nine highest HAPs included in AP-42 Table 3.2-3.
***PAH = Polyaromatic Hydrocarbon (PAHs are considered HAPs, since they are considered Polycyclic Organic Matter)

Methodology

***** Potential to emit for the emergency generators is based on 500 hours per year of operation

Emission Factors are from AP-42 (Supplement F, July 2000), Table 3.2-3
Potential Fuel Usage (MMBtu/yr) = [Maximum Heat Input Capacity (MMBtu/hr)] * [Maximum Hours Operating per Year (hr/yr)]
Potential Emissions (tons/yr) = [Potential Fuel Usage (MMBtu/yr)] * [Emission Factor (lb/MMBtu)] / [2000 lb/ton]

	Greenhouse Gas (GHG)		
Greenhouse Gases (GHGs)	CO2	CH4	N2O
Emission Factor in lb/MMBtu****	110	1.25	
Emission Factor in lb/MMcf*****			2.2
Potential Emission in **tons/yr**	96.53	1.10	0.002
Summed Potential Emissions in **tons/yr**	97.62		
CO2e **tons/yr**	96.53	23.03	0.59
CO2e Total in **tons/yr**	120.15		

Methodology
****The CO2 and CH4 emission factors are from Emission Factors are from AP-42 (Supplement F, July 2000), Table 3.2-2
*****The N2O emission factor is from AP 42, Table 1.4-2. The N2O Emission Factor for uncontrolled is 2.2. The N2O Emission Factor for low Nox burner is 0.64.
Greenhouse Warming Potentials (GWP) from Table A-1 of 40 CFR Part 98 Subpart A.
For CO2 and CH4: Emission (tons/yr) = [Potential Fuel Usage (MMBtu/yr)] * [Emission Factor (lb/MMBtu)] / [2,000 lb/ton]
For N2O: Emission (tons/yr) = [Potential Fuel Usage (MMCF/yr)] * [Emission Factor (lb/MMCF)] / [2,000 lb/ton]
CO2e (tons/yr) = CO2 Potential Emission ton/yr x CO2 GWP (1), CH4 Potential Emission ton/yr x CH4 GWP (21), and N2O Potential Emission ton/yr x N20 GWP (310).

Abbreviations

PM = Particulate Matter
PM10 = Particulate Matter (<10 um)
SO2 = Sulfur Dioxide
NOx = Nitrous Oxides
VOC - Volatile Organic Compounds
CO = Carbon Monoxide
CO2 = Cabon Dioxide
CH4 = Methane
N2O = Nitrous Oxide
CO2e = CO2 equivalent emissions

Appendix A: Emission Calculations
Reciprocating Internal Combustion Engines - Natural Gas
4-Stroke Rich-Burn (4SRB) Engines

Old B359 Emergency Generator

Company Name: Eli Lilly and Company, Lilly Technology Center
Address City IN Zip: 1555 South Harding Street, Indianapolis, IN 46168
Permit Number: 097-32466-00072
Reviewer: Ghassan Shalabi
Date: 15-Aug-2012

Maximum Heat Input Capacity (MMBtu/hr)	0.28
Maximum Hours Operated per Year (hr/yr)*	500
Potential Fuel Usage (MMBtu/yr)	140
High Heat Value (MMBtu/MMscf)	1020
Potential Fuel Usage (MMcf/yr)	0.14

	Pollutant						
Criteria Pollutants	PM**	PM10**	PM2.5**	SO2	NOx	VOC	CO
Emission Factor (lb/MMBtu)	9.91E-03	9.50E-03	9.50E-03	5.88E-04	2.21E+00	2.96E-02	3.72E+00
Potential Emissions (tons/yr)	0.0007	0.00	0.00	0.0000	0.15	0.00	0.26

PM10(filtrerable) = PM2.5 (filterable)

Hazardous Air Pollutants (HAPs)

Pollutant	Emission Factor (lb/MMBtu)	Potential Emissions (tons/yr)
Acetaldehyde	2.79E-03	1.95E-04
Acrolein	2.63E-03	1.84E-04
Benzene	1.58E-03	1.11E-04
1,3-Butadiene	6.63E-04	4.64E-05
Formaldehyde	2.05E-02	1.44E-03
Methanol	3.06E-03	2.14E-04
Total PAH***	1.41E-04	9.87E-06
Toluene	5.58E-04	3.91E-05
Xylene	1.95E-04	1.37E-05
	Total	**0.002**

Criteria Pollutants and HAPs Emission factors are from AP-42 (07/2000), Table 3.2-3 AP-42

Appendix A: Emission Calculations

Company Name: Eli Lilly and Company, Lilly Technology Center
Address City IN Zip: 1555 South Harding Street, Indianapolis, IN 46168
Permit Number: 097-32466-00072
Reviewer: Ghassan Shalabi
Date: 15-Aug-2012

HAP pollutants consist of the nine highest HAPs included in AP-42 Table 3.2-3.
***PAH = Polyaromatic Hydrocarbon (PAHs are considered HAPs, since they are considered Polycyclic Organic Matter)

Methodology

***** Potential to emit for the emergency generators is based on 500 hours per year of operation

Emission Factors are from AP-42 (Supplement F, July 2000), Table 3.2-3
Potential Fuel Usage (MMBtu/yr) = [Maximum Heat Input Capacity (MMBtu/hr)] * [Maximum Hours Operating per Year (hr/yr)]
Potential Emissions (tons/yr) = [Potential Fuel Usage (MMBtu/yr)] * [Emission Factor (lb/MMBtu)] / [2000 lb/ton]

	Greenhouse Gas (GHG)		
Greenhouse Gases (GHGs)	CO2	CH4	N2O
Emission Factor in lb/MMBtu****	110	1.25	
Emission Factor in lb/MMcf*****			2.2
Potential Emission in **tons/yr**	7.70	0.09	0.00
Summed Potential Emissions in **tons/yr**		7.79	
CO2e **ton/yr**	7.70	1.84	0.05
CO2e Total in **tons/yr**		9.58	

Methodology
****The CO2 and CH4 emission factors are from Emission Factors are from AP-42 (Supplement F, July 2000), Table 3.2-2
*****The N2O emission factor is from AP 42, Table 1.4-2. The N2O Emission Factor for uncontrolled is 2.2. The N2O Emission Factor for low Nox burner is 0.64.
Greenhouse Warming Potentials (GWP) from Table A-1 of 40 CFR Part 98 Subpart A.
For CO2 and CH4: Emission (tons/yr) = [Potential Fuel Usage (MMBtu/yr)] * [Emission Factor (lb/MMBtu)] / [2,000 lb/ton]
For N2O: Emission (tons/yr) = [Potential Fuel Usage (MMCF/yr)] * [Emission Factor (lb/MMCF)] / [2,000 lb/ton]
CO2e (tons/yr) = CO2 Potential Emission ton/yr x CO2 GWP (1), CH4 Potential Emission ton/yr x CH4 GWP (21), N2O Potential Emission ton/yr x N20 GWP (310).

Abbreviations

PM = Particulate Matter
PM10 = Particulate Matter (<10 um)
SO2 = Sulfur Dioxide
NOx = Nitrous Oxides
VOC - Volatile Organic Compounds
CO = Carbon Monoxide
CO2 = Cabon Dioxide
CH4 = Methane
N2O = Nitrous Oxide
CO2e = CO2 equivalent emissions

Appendix A: Emission Calculations
Large Reciprocating Internal Combustion Engines - Diesel Fuel (B141A)
Output Rating (>600 HP)
Maximum Input Rate (>4.2 MMBtu/hr)

Company Name:	Eli Lilly and Company, Lilly Technology Center
Address City IN Zip:	1555 South Harding Street, Indianapolis, IN 46168
Permit Number:	097-32466-00072
Reviewer:	Ghassan Shalabi
Date:	15-Aug-2012

Emissions calculated based on output rating (hp)

Output Horsepower Rating (hp)	1350.0
Maximum Hours Operated per Year	500
Potential Throughput (hp-hr/yr)	675,000
Sulfur Content (S) of Fuel (% by weight)	0.050

Green House Gas Emissions (GHG)

	Pollutant		
	CO2	CH4	N2O
Emission Factor in lb/hp-hr	1.16E+00	6.35E-05	9.30E-06
Potential Emission in **tons/yr**	3.92E+02	2.14E-02	3.14E-03
Summed Potential Emissions in tons/yr	**3.92E+02**		
CO2e	3.92E+02	4.50E-01	9.73E-01
CO2e Total in tons/yr	**3.93E+02**		

Methodology
Emission Factors are from AP 42 (Supplement B 10/96) Tables 3.4-1 , 3.4-2, 3.4-3, and 3.4-4.
CH4 and N2O Emission Factor from 40 CFR 98 Subpart C Table C-2.
Global Warming Potentials (GWP) from Table A-1 of 40 CFR Part 98 Subpart A.
Potential Throughput (hp-hr/yr) = [Output Horsepower Rating (hp)] * [Maximum Hours Operated per Year]
Potential Emission (tons/yr) = [Potential Throughput (hp-hr/yr)] * [Emission Factor (lb/hp-hr)] / [2,000 lb/ton]
CO2e (tons/yr) = CO2 Potential Emission ton/yr x CO2 GWP (1) + CH4 Potential Emission ton/yr x CH4 GWP (21) + N2O Potential Emission ton/yr x N2O GWP (310).

Appendix A: Emission Calculations
Large Reciprocating Internal Combustion Engines - Diesel Fuel (B141B)
Output Rating (>600 HP)
Maximum Input Rate (>4.2 MMBtu/hr)

Company Name: Eli Lilly and Company, Lilly Technology Center
Address City IN Zip: 1555 South Harding Street, Indianapolis, IN 46168
Permit Number: 097-32466-00072
Reviewer: Ghassan Shalabi
Date: 15-Aug-2012

Emissions calculated based on output rating (hp)

Output Horsepower Rating (hp)	1350.0
Maximum Hours Operated per Year	500
Potential Throughput (hp-hr/yr)	675,000
Sulfur Content (S) of Fuel (% by weight)	0.050

Green House Gas Emissions (GHG)

	Pollutant		
	CO2	CH4	N2O
Emission Factor in lb/hp-hr	1.16E+00	6.35E-05	9.30E-06
Potential Emission in **tons/yr**	3.92E+02	2.14E-02	3.14E-03
Summed Potential Emissions in tons/yr	**3.92E+02**		
CO2 ton/yr	3.92E+02	4.56E+00	9.73E-01
CO2e Total in tons/yr	**3.97E+02**		

Methodology
Emission Factors are from AP 42 (Supplement B 10/96) Tables 3.4-1 , 3.4-2, 3.4-3, and 3.4-4.
CH4 and N2O Emission Factor from 40 CFR 98 Subpart C Table C-2.
Global Warming Potentials (GWP) from Table A-1 of 40 CFR Part 98 Subpart A.
Potential Throughput (hp-hr/yr) = [Output Horsepower Rating (hp)] * [Maximum Hours Operated per Year]
Potential Emission (tons/yr) = [Potential Throughput (hp-hr/yr)] * [Emission Factor (lb/hp-hr)] / [2,000 lb/ton]
CO2e (tons/yr) = CO2 Potential Emission ton/yr x CO2 GWP (1), CH4 Potential Emission ton/yr x CH4 GWP (21), N2O Potential Emission ton/yr x N2O GWP (310).

Appendix A: Emission Calculations
Large Reciprocating Internal Combustion Engines - Diesel Fuel (B141C)
Output Rating (>600 HP)
Maximum Input Rate (>4.2 MMBtu/hr)

Company Name: Eli Lilly and Company, Lilly Technology Center
Address City IN Zip: 1555 South Harding Street, Indianapolis, IN 46168
Permit Number: 097-32466-00072
Reviewer: Ghassan Shalabi
Date: 15-Aug-2012

Emissions calculated based on output rating (hp)

Output Horsepower Rating (hp)	2700.0
Maximum Hours Operated per Year	500
Potential Throughput (hp-hr/yr)	1,350,000
Sulfur Content (S) of Fuel (% by weight)	0.050

Green House Gas Emissions (GHG)

	Pollutant		
	CO2	CH4	N2O
Emission Factor in lb/hp-hr	1.16E+00	6.35E-05	9.30E-06
Potential Emission in **tons/yr**	7.83E+02	4.28E-02	6.28E-03
Summed Potential Emissions in tons/yr	**7.83E+02**		
	7.83E+02	8.99E-01	1.95E+00
CO2e Total in tons/yr	**7.86E+02**		

Methodology
Emission Factors are from AP 42 (Supplement B 10/96) Tables 3.4-1 , 3.4-2, 3.4-3, and 3.4-4.
CH4 and N2O Emission Factor from 40 CFR 98 Subpart C Table C-2.
Global Warming Potentials (GWP) from Table A-1 of 40 CFR Part 98 Subpart A.
Potential Throughput (hp-hr/yr) = [Output Horsepower Rating (hp)] * [Maximum Hours Operated per Year]
Potential Emission (tons/yr) = [Potential Throughput (hp-hr/yr)] * [Emission Factor (lb/hp-hr)] / [2,000 lb/ton]
CO2e (tons/yr) = CO2 Potential Emission ton/yr x CO2 GWP (1) + CH4 Potential Emission ton/yr x CH4 GWP (21) + N2O Potential Emission ton/yr x N2O GWP (310).

Appendix A: Emission Calculations
Large Reciprocating Internal Combustion Engines - Diesel Fuel (B141D)
Output Rating (>600 HP)
Maximum Input Rate (>4.2 MMBtu/hr)

Company Name: Eli Lilly and Company, Lilly Technology Center
Address City IN Zip: 1555 South Harding Street, Indianapolis, IN 46168
Permit Number: 097-32466-00072
Reviewer: Ghassan Shalabi
Date: 15-Aug-2012

Emissions calculated based on output rating (hp)

Output Horsepower Rating (hp)	2700.0
Maximum Hours Operated per Year	500
Potential Throughput (hp-hr/yr)	1,350,000
Sulfur Content (S) of Fuel (% by weight)	0.050

Green House Gas Emissions (GHG)

	Pollutant		
	CO2	CH4	N2O
Emission Factor in lb/hp-hr	1.16E+00	6.35E-05	9.30E-06
Potential Emission in **tons/yr**	7.83E+02	4.28E-02	6.28E-03
Summed Potential Emissions in tons/yr	**7.83E+02**		
CO2e	7.83E+02	8.99E-01	1.95E+00
CO2e Total in tons/yr	**7.86E+02**		

Methodology
Emission Factors are from AP 42 (Supplement B 10/96) Tables 3.4-1 , 3.4-2, 3.4-3, and 3.4-4.
CH4 and N2O Emission Factor from 40 CFR 98 Subpart C Table C-2.
Global Warming Potentials (GWP) from Table A-1 of 40 CFR Part 98 Subpart A.
Potential Throughput (hp-hr/yr) = [Output Horsepower Rating (hp)] * [Maximum Hours Operated per Year]
Potential Emission (tons/yr) = [Potential Throughput (hp-hr/yr)] * [Emission Factor (lb/hp-hr)] / [2,000 lb/ton]
CO2e (tons/yr) = CO2 Potential Emission ton/yr x CO2 GWP (1), CH4 Potential Emission ton/yr x CH4 GWP (21), N2O Potential Emission ton/yr x N2O GWP (310).

Appendix A: Emission Calculations
Large Reciprocating Internal Combustion Engines - Diesel Fuel
Output Rating (>600 HP)
Maximum Input Rate (>4.2 MMBtu/hr)

Company Name: Eli Lilly and Company, Lilly Technology Center
Address City IN Zip: 1555 South Harding Street, Indianapolis, IN 46168
Permit Number: 097-32466-00072
Reviewer: Ghassan Shalabi
Date: 15-Aug-2012

Emissions calculated based on output rating (hp)

Output Horsepower Rating (hp)	2796.0
Maximum Hours Operated per Year	500
Potential Throughput (hp-hr/yr)	1,398,000
Sulfur Content (S) of Fuel (% by weight)	0.050

Green House Gas Emissions (GHG)

	Pollutant		
	CO2	CH4	N2O
Emission Factor in lb/hp-hr	1.16E+00	6.35E-05	9.30E-06
Potential Emission in **tons/yr**	8.11E+02	4.44E-02	6.50E-03
Summed Potential Emissions in tons/yr	**8.11E+02**		
	8.11E+02	**9.31E-01**	**2.02E+00**
CO2e Total in tons/yr	**8.14E+02**		

Methodology
Emission Factors are from AP 42 (Supplement B 10/96) Tables 3.4-1 , 3.4-2, 3.4-3, and 3.4-4.
CH4 and N2O Emission Factor from 40 CFR 98 Subpart C Table C-2.
Global Warming Potentials (GWP) from Table A-1 of 40 CFR Part 98 Subpart A.
Potential Throughput (hp-hr/yr) = [Output Horsepower Rating (hp)] * [Maximum Hours Operated per Year]
Potential Emission (tons/yr) = [Potential Throughput (hp-hr/yr)] * [Emission Factor (lb/hp-hr)] / [2,000 lb/ton]
CO2e (tons/yr) = CO2 Potential Emission ton/yr x CO2 GWP (1), CH4 Potential Emission ton/yr x CH4 GWP (21), N2O Potential Emission ton/yr x N2O GWP (310).

Appendix A: Emission Calculations
Reciprocating Internal Combustion Engines - Diesel Fuel (B314)
Output Rating (<=600 HP)
Maximum Input Rate (<=4.2 MMBtu/hr)

Company Name: Eli Lilly and Company, Lilly Technology Center
Address City IN Zip: 1555 South Harding Street, Indianapolis, IN 46168
Permit Number: 097-32466-00072
Reviewer: Ghassan Shalabi
Date: 15-Aug-2012

	Pollutant						
	PM*	PM10*	direct PM2.5*	SO2	NOx	VOC	CO
Emission Factor in lb/hp-hr	0.0022	0.0022	0.0022	0.0021	0.0310	0.0025	0.0067
Potential Emission in **tons/yr**	0.05	0.05	0.05	0.04	0.64	0.05	0.14

*PM and PM2.5 emission factors are assumed to be equivalent to PM10 emission factors. No information was given regarding which method was used to determine the factor or the fraction of PM10 which is condensable.

Hazardous Air Pollutants (HAPs)

	Pollutant							
	Benzene	Toluene	Xylene	1,3-Butadiene	Formaldehyde	Acetaldehyde	Acrolein	Total PAH HAPs***
Emission Factor in lb/hp-hr****	6.53E-06	2.86E-06	2.00E-06	2.74E-07	8.26E-06	5.37E-06	6.48E-07	1.18E-06
Potential Emission in **tons/yr**	1.34E-04	5.89E-05	4.10E-05	5.63E-06	1.70E-04	1.10E-04	1.33E-05	2.42E-05

***PAH = Polyaromatic Hydrocarbon (PAHs are considered HAPs, since they are considered Polycyclic Organic Matter)
****Emission factors in lb/hp-hr were calculated using emission factors in lb/MMBtu and a brake specific fuel consumption of 7,000 Btu / hp-hr (AP-42 Table 3.3-1).

Potential Emission of Total HAPs (tons/yr)	**5.58E-04**

Green House Gas Emissions (GHG)

	Pollutant		
	CO2	CH4	N2O
Emission Factor in lb/hp-hr	1.15E+00	4.63E-05	9.26E-06
Potential Emission in **tons/yr**	2.37E+01	9.52E-04	1.90E-04
Summed Potential Emissions in tons/yr	**2.37E+01**		
CO2e	**2.37E+01**	**2.00E-02**	**5.90E-02**
CO2e Total in tons/yr	**2.37E+01**		

Methodology
Emission Factors are from AP42 (Supplement B 10/96), Tables 3.3-1 and 3.3-2
CH4 and N2O Emission Factor from 40 CFR 98 Subpart C Table C-2.
Global Warming Potentials (GWP) from Table A-1 of 40 CFR Part 98 Subpart A.
Potential Throughput (hp-hr/yr) = [Output Horsepower Rating (hp)] * [Maximum Hours Operated per Year]
Potential Emission (tons/yr) = [Potential Throughput (hp-hr/yr)] * [Emission Factor (lb/hp-hr)] / [2,000 lb/ton]
CO2e (tons/yr) = CO2 Potential Emission ton/yr x CO2 GWP (1), CH4 Potential Emission ton/yr x CH4 GWP (21), N2O Potential Emission ton/yr x N2O GWP (310).

Appendix A: Emission Calculations

Company Name: Eli Lilly and Company, Lilly Technology Center
Address City IN Zip: 1555 South Harding Street, Indianapolis, IN 46168
Permit Number: 097-32466-00072
Reviewer: Ghassan Shalabi
Date: 15-Aug-2012

Entire Source GHG Emissions

Unit	CO2e (TPY)
B359	9.58
B359 Unit 2	120.15
B141A	392.92
B141B	397.03
B141C	785.85
B141D	785.85
Insig	813.79
B314	23.73
Total	3328.90

INDIANA DEPARTMENT OF ENVIRONMENTAL MANAGEMENT

We Protect Hoosiers and Our Environment.

Michael R. Pence
Governor

Thomas W. Easterly
Commissioner

100 North Senate Avenue
Indianapolis, Indiana 46204
(317) 232-8603
Toll Free (800) 451-6027
www.idem.IN.gov

SENT VIA U.S. MAIL: CONFIRMED DELIVERY AND SIGNATURE REQUESTED

TO: Catherine Ehlhardt
Eli Lilly and Company, Lilly Technology Center
Lilly Technology Ctr
Indianapolis, IN 46285

DATE: March 27, 2013

FROM: Matt Stuckey, Branch Chief
Permits Branch
Office of Air Quality

SUBJECT: Final Decision
Title V - Significant Permit Modification
097 - 32466 - 00072

Enclosed is the final decision and supporting materials for the air permit application referenced above. Please note that this packet contains the original, signed, permit documents.

The final decision is being sent to you because our records indicate that you are the contact person for this application. However, if you are not the appropriate person within your company to receive this document, please forward it to the correct person.

A copy of the final decision and supporting materials has also been sent via standard mail to:
W Darin Moody, VP-Corporate Engineering & Continuous Improvement
Bernard Paul B Paul Consulting
OAQ Permits Branch Interested Parties List

If you have technical questions regarding the enclosed documents, please contact the Office of Air Quality, Permits Branch at (317) 233-0178, or toll-free at 1-800-451-6027 (ext. 3-0178), and ask to speak to the permit reviewer who prepared the permit. If you think you have received this document in error, please contact Joanne Smiddie-Brush of my staff at 1-800-451-6027 (ext 3-0185), or via e-mail at jbrush@idem.IN.gov.

Final Applicant Cover letter.dot 11/30/07

INDIANA DEPARTMENT OF ENVIRONMENTAL MANAGEMENT

We Protect Hoosiers and Our Environment.

Michael R. Pence
Governor

Thomas W. Easterly
Commissioner

100 North Senate Avenue
Indianapolis, Indiana 46204
(317) 232-8603
Toll Free (800) 451-6027
www.idem.IN.gov

March 27, 2013

TO: Indianapolis Central Library Branch

From: Matthew Stuckey, Branch Chief
Permits Branch
Office of Air Quality

Subject: **Important Information for Display Regarding a Final Determination**

Applicant Name: Eli Lilly and Company, Lilly Technology Center
Permit Number: 097 - 32466 - 00072

You previously received information to make available to the public during the public comment period of a draft permit. Enclosed is a copy of the final decision and supporting materials for the same project. Please place the enclosed information along with the information you previously received. To ensure that your patrons have ample opportunity to review the enclosed permit, **we ask that you retain this document for at least 60 days.**

The applicant is responsible for placing a copy of the application in your library. If the permit application is not on file, or if you have any questions concerning this public review process, please contact Joanne Smiddie-Brush, OAQ Permits Administration Section at 1-800-451-6027, extension 3-0185.

Enclosures
Final Library.dot 11/30/07

INDIANA DEPARTMENT OF ENVIRONMENTAL MANAGEMENT

We Protect Hoosiers and Our Environment.

Michael R. Pence
Governor

Thomas W. Easterly
Commissioner

100 North Senate Avenue
Indianapolis, Indiana 46204
(317) 232-8603
Toll Free (800) 451-6027
www.idem.IN.gov

TO: Interested Parties / Applicant

DATE: March 27, 2013

RE: Eli Lilly and Company, Lilly Technology Center / 097 - 32466 - 00072

FROM: Matthew Stuckey, Branch Chief
Permits Branch
Office of Air Quality

In order to conserve paper and reduce postage costs, IDEM's Office of Air Quality is now sending many permit decisions on CDs in Adobe PDF format. The enclosed CD contains information regarding the company named above.

This permit is also available on the IDEM website at:
http://www.in.gov/ai/appfiles/idem-caats/

If you would like to request a paper copy of the permit document, please contact IDEM's central file room at:

Indiana Government Center North, Room 1201
100 North Senate Avenue, MC 50-07
Indianapolis, IN 46204
Phone: 1-800-451-6027 (ext. 4-0965)
Fax (317) 232-8659

Please Note: *If you feel you have received this information in error, or would like to be removed from the Air Permits mailing list, please contact Patricia Pear with the Air Permits Administration Section at 1-800-451-6027, ext. 3-6875 or via e-mail at PPEAR@IDEM.IN.GOV.*

Enclosures
CD Memo.dot 11/14/08

Mail Code 61-53

IDEM Staff	LPOGOST 3/27/2013 Eli Lilly & Co - Lilly Tech Ctr 097 - 32466 - 00072 final)			AFFIX STAMP HERE IF USED AS CERTIFICATE OF MAILING
Name and address of Sender	▶	Indiana Department of Environmental Management Office of Air Quality – Permits Branch 100 N. Senate Indianapolis, IN 46204	Type of Mail: **CERTIFICATE OF MAILING ONLY**	

Line	Article Number	Name, Address, Street and Post Office Address	Postage	Handing Charges	Act. Value (If Registered)	Insured Value	Due Send if COD	R.R. Fee	S.D. Fee	S.H. Fee	Rest. Del. Fee Remarks
1		Catherine Ehlhardt Eli Lilly & Co - Lilly Tech Ctr Lilly Technology Ctr Indianapolis IN 46285 (Source CAATS) Via confirmed delivery									
2		W Darin Moody VP-Corporate Engineering & Continuous Improvement Eli Lilly & Co - Lilly Tech Ctr Lilly Corporate Ctr Indianapolis IN 46285 *(RO CAATS)*									
3		Marion County Health Department 3838 N, Rural St Indianapolis IN 46205-2930 *(Health Department)*									
4		Indianapolis Central Library Branch 40 East St. Clair Street Indianapolis IN 46204 *(Library)*									
5		Indianapolis City Council and Mayors Office 200 East Washington Street, Room E Indianapolis IN 46204 *(Local Official)*									
6		Marion County Commissioners 200 E. Washington St. City County Bldg., Suite 801 Indianapolis IN 46204 *(Local Official)*									
7		Matt Mosier Office of Sustainability 1200 S Madison Ave #200 Indianapolis IN 46225 *(Local Official)*									
8		Bernard Paul B Paul Consulting, LLC 285 Spring Drive Zionsville IN 46077 *(Consultant)*									
9											
10											
11											
12											
13											
14											
15											

Total number of pieces Listed by Sender	Total number of Pieces Received at Post Office	Postmaster, Per (Name of Receiving employee)	The full declaration of value is required on all domestic and international registered mail. The maximum indemnity payable for the reconstruction of nonnegotiable documents under Express Mail document reconstructing insurance is $50,000 per piece subject to a limit of $50, 000 per occurrence. The maximum indemnity payable on Express mil merchandise insurance is $500. The maximum indemnity payable is $25,000 for registered mail, sent with optional postal insurance. See ***Domestic Mail Manual*** **R900, S913**, and **S921** for limitations of coverage on inured and COD mail. See ***International Mail Manual*** for limitations o coverage on international mail. Special handling charges apply only to Standard Mail (A) and Standard Mail (B) parcels.

FACSIMILIE OF PS Form 3877