INDIANA DEPARTMENT OF ENVIRONMENTAL MANAGEMENT
We Protect Hoosiers and Our Environment.
100 N. Senate Avenue • Indianapolis, IN 46204
(800) 451-6027 • (317) 232-8603 • www.idem.IN.gov

Michael R. Pence
Governor

Thomas W. Easterly
Commissioner

TO: Interested Parties / Applicant

DATE: March 20, 2014

RE: U.S. Steel – Gary Works / 089-33651-00121

FROM: Matthew Stuckey, Branch Chief
Permits Branch
Office of Air Quality

Notice of Decision: Approval – Effective Immediately

Please be advised that on behalf of the Commissioner of the Department of Environmental Management, I have issued a decision regarding the enclosed matter. Pursuant to IC 13-17-3-4 and 326 IAC 2, this permit modification is effective immediately, unless a petition for stay of effectiveness is filed and granted, and may be revoked or modified in accordance with the provisions of IC 13-15-7-1.

If you wish to challenge this decision, IC 4-21.5-3-7 and IC 13-15-7-3 require that you file a petition for administrative review. This petition may include a request for stay of effectiveness and must be submitted to the Office Environmental Adjudication, 100 North Senate Avenue, Government Center North, Suite N 501E, Indianapolis, IN 46204, **within eighteen (18) days of the mailing of this notice**. The filing of a petition for administrative review is complete on the earliest of the following dates that apply to the filing:

(1) the date the document is delivered to the Office of Environmental Adjudication (OEA);
(2) the date of the postmark on the envelope containing the document, if the document is mailed to OEA by U.S. mail; or
(3) The date on which the document is deposited with a private carrier, as shown by receipt issued by the carrier, if the document is sent to the OEA by private carrier.

The petition must include facts demonstrating that you are either the applicant, a person aggrieved or adversely affected by the decision or otherwise entitled to review by law. Please identify the permit, decision, or other order for which you seek review by permit number, name of the applicant, location, date of this notice and all of the following:

(1) the name and address of the person making the request;
(2) the interest of the person making the request;
(3) identification of any persons represented by the person making the request;
(4) the reasons, with particularity, for the request;
(5) the issues, with particularity, proposed for considerations at any hearing; and
(6) identification of the terms and conditions which, in the judgment of the person making the request, would be appropriate in the case in question to satisfy the requirements of the law governing documents of the type issued by the Commissioner.

Pursuant to 326 IAC 2-7-18(d), any person may petition the U.S. EPA to object to the issuance of a Title V operating permit or modification within sixty (60) days of the end of the forty-five (45) day EPA review period. Such an objection must be based only on issues that were raised with reasonable specificity during the public comment period, unless the petitioner demonstrates that it was impractible to raise such issues, or if the grounds for such objection arose after the comment period.

To petition the U.S. EPA to object to the issuance of a Title V operating permit, contact:

U.S. Environmental Protection Agency
401 M Street
Washington, D.C. 20406

If you have technical questions regarding the enclosed documents, please contact the Office of Air Quality, Permits Branch at (317) 233-0178. Callers from within Indiana may call toll-free at 1-800-451-6027, ext. 3-0178.

INDIANA DEPARTMENT OF ENVIRONMENTAL MANAGEMENT
We Protect Hoosiers and Our Environment.
100 N. Senate Avenue • Indianapolis, IN 46204
(800) 451-6027 • (317) 232-8603 • www.idem.IN.gov

Michael R. Pence
Governor

Thomas W. Easterly
Commissioner

Mr. Joseph E. Hanning
U.S. Steel - Gary Works
Penn Liberty Plaza I
1350 Penn Ave., Suite 200
Pittsburgh, PA 15222

March 20, 2014

Re: 089-33651-00121
Significant Permit Modification to
Part 70 Renewal No.: T089-29907-00121

Dear Mr. Hanning:

U.S. Steel - Gary Works was issued Part 70 Operating Permit Renewal No. T089-29907-00121 on December 20, 2013 for a stationary integrated steel mill located at 1 North Broadway, Gary, Indiana 46402. An application requesting changes to this permit was received on September 13, 2013. Pursuant to the provisions of 326 IAC 2-7-12, a significant permit modification to this permit is hereby approved as described in the attached Technical Support Document.

For your convenience, the entire Part 70 Operating Permit Renewal as modified is attached.

A copy of the permit is available on the Internet at: http://www.in.gov/ai/appfiles/idem-caats/. For additional information about air permits and how the public and interested parties can participate, refer to the IDEM's Guide for Citizen Participation and Permit Guide on the Internet at: www.idem.in.gov

This decision is subject to the Indiana Administrative Orders and Procedures Act - IC 4-21.5-3-5. If you have any questions on this matter, please contact Kristen Willoughby, of my staff, at 317-233-3031 or 1-800-451-6027, and ask for extension 3-3031.

Sincerely,

Jenny Acker, Section Chief
Permits Branch
Office of Air Quality

Attachment(s): Updated Permit and Technical Support Document

JA/kw

cc: File - Lake County
Lake County Health Department
U.S. EPA, Region V
Compliance and Enforcement Branch
Billing, Licensing and Training Section
IDEM Northwest Regional Office

INDIANA DEPARTMENT OF ENVIRONMENTAL MANAGEMENT
We Protect Hoosiers and Our Environment.
100 N. Senate Avenue • Indianapolis, IN 46204
(800) 451-6027 • (317) 232-8603 • www.idem.IN.gov

Michael R. Pence
Governor

Thomas W. Easterly
Commissioner

Part 70 Operating Permit Renewal
OFFICE OF AIR QUALITY

U.S. Steel - Gary Works
One North Broadway
Gary, Indiana 46402

(herein known as the Permittee) is hereby authorized to operate subject to the conditions contained herein, the source described in Section A (Source Summary) of this permit.

The Permittee must comply with all conditions of this permit. Noncompliance with any provisions of this permit is grounds for enforcement action; permit termination, revocation and reissuance, or modification; or denial of a permit renewal application. Noncompliance with any provision of this permit, except any provision specifically designated as not federally enforceable, constitutes a violation of the Clean Air Act. It shall not be a defense for the Permittee in an enforcement action that it would have been necessary to halt or reduce the permitted activity in order to maintain compliance with the conditions of this permit. An emergency does constitute an affirmative defense in an enforcement action provided the Permittee complies with the applicable requirements set forth in Section B, Emergency Provisions.

This permit is issued in accordance with 326 IAC 2 and 40 CFR Part 70 Appendix A and contains the conditions and provisions specified in 326 IAC 2-7 as required by 42 U.S.C. 7401, et. seq. (Clean Air Act as amended by the 1990 Clean Air Act Amendments), 40 CFR Part 70.6, IC 13-15 and IC 13-17.

Operation Permit No.: T089-29907-00121	
Issued by: Original Signed Chrystal Wagner, Section Chief Permits Branch, Office of Air Quality	Issuance Date:December 20, 2013 Expiration Date:December 20, 2018

Significant Permit Modification No.: 089-33651-00121	
Issued by: Jenny Acker, Section Chief Permits Branch Office of Air Quality	Issuance Date: March 20, 2014 Expiration Date:December 20, 2018

TABLE OF CONTENTS

SECTION A SOURCE SUMMARY 15

A.1 General Information [326 IAC 2-7-4(c)] [326 IAC 2-7-5(14)] [326 IAC 2-7-1(22)] 15
A.2 Part 70 Source Definition [326 IAC 2-7-1(22)] 15
A.3 Emission Units and Pollution Control Equipment Summary [326 IAC 2-7-4(c)(3)] [326 IAC 2-7-5(14)] 16
A.4 Insignificant Activities [326 IAC 2-7-1(21)] [326 IAC 2-7-4(c)][326 IAC 2-7-5(14)] 51
A.5 Part 70 Permit Applicability [326 IAC 2-7-2] 56

SECTION B GENERAL CONDITIONS 57

B.1 Definitions [326 IAC 2-7-1] 57
B.2 Permit Term [326 IAC 2-7-5(2)][326 IAC 2-1.1-9.5][326 IAC 2-7-4(a)(1)(D)][IC 13-15-3-6(a)] 57
B.3 Term of Conditions [326 IAC 2-1.1-9.5] 57
B.4 Enforceability [326 IAC 2-7-7] [IC 13-17-12] 57
B.5 Severability [326 IAC 2-7-5(5)] 57
B.6 Property Rights or Exclusive Privilege [326 IAC 2-7-5(6)(D)] 57
B.7 Duty to Provide Information [326 IAC 2-7-5(6)(E)] 57
B.8 Certification [326 IAC 2-7-4(f)][326 IAC 2-7-6(1)][326 IAC 2-7-5(3)(C)] 58
B.9 Annual Compliance Certification [326 IAC 2-7-6(5)] 58
B.10 Preventive Maintenance Plan [326 IAC 2-7-5(12)] [326 IAC 1-6-3] 59
B.11 Emergency Provisions [326 IAC 2-7-16] 60
B.12 Permit Shield [326 IAC 2-7-15][326 IAC 2-7-20][326 IAC 2-7-12] 61
B.13 Prior Permits Superseded [326 IAC 2-1.1-9.5][326 IAC 2-7-10.5] 62
B.14 Termination of Right to Operate [326 IAC 2-7-10][326 IAC 2-7-4(a)] 62
B.15 Permit Modification, Reopening, Revocation and Reissuance, or Termination [326 IAC 2-7-5(6)(C)][326 IAC 2-7-8(a)][326 IAC 2-7-9] 62
B.16 Permit Renewal [326 IAC 2-7-3][326 IAC 2-7-4][326 IAC 2-7-8(e)] 63
B.17 Permit Amendment or Modification [326 IAC 2-7-11][326 IAC 2-7-12] [40 CFR 72] 64
B.18 Permit Revision Under Economic Incentives and Other Programs [326 IAC 2-7-5(8)][326 IAC 2-7-12(b)(2)] 64
B.19 Operational Flexibility [326 IAC 2-7-20][326 IAC 2-7-10.5] 64
B.20 Source Modification Requirement [326 IAC 2-7-10.5] 66
B.21 Inspection and Entry [326 IAC 2-7-6][IC 13-14-2-2][IC 13-30-3-1][IC 13-17-3-2] 66
B.22 Transfer of Ownership or Operational Control [326 IAC 2-7-11] 66
B.23 Annual Fee Payment [326 IAC 2-7-19] [326 IAC 2-7-5(7)][326 IAC 2-1.1-7] 67
B.24 Credible Evidence [326 IAC 2-7-5(3)][326 IAC 2-7-6][62 FR 8314] [326 IAC 1-1-6] 67

SECTION C SOURCE OPERATION CONDITIONS 68

Emission Limitations and Standards [326 IAC 2-7-5(1)] 68
C.1 Opacity [326 IAC 5-1] 68
C.2 Open Burning [326 IAC 4-1] [IC 13-17-9] 68
C.3 Incineration [326 IAC 4-2] [326 IAC 9-1-2] 68
C.4 Fugitive Dust Emissions [326 IAC 6-4] 68
C.5 Fugitive Particulate Matter Emissions [326 IAC 6.8-10-3] 68
C.6 Stack Height [326 IAC 1-7] 70
C.7 Asbestos Abatement Projects [326 IAC 14-10] [326 IAC 18] [40 CFR 61, Subpart M] ... 70

Testing Requirements [326 IAC 2-7-6(1)] 71
C.8 Performance Testing [326 IAC 3-6] 71
C.9 Sulfur Fuel Sampling and Analysis (Entire Source) [326 IAC 7-4.1-2] 71

Compliance Requirements [326 IAC 2-1.1-11] 72
C.10 Compliance Requirements [326 IAC 2-1.1-11] 72

Compliance Monitoring Requirements [326 IAC 2-7-5(1)][326 IAC 2-7-6(1)] 72
C.11 Compliance Monitoring [326 IAC 2-7-5(3)][326 IAC 2-7-6(1)][40 CFR 64][326 IAC 3-8] 72
C.12 Continuous Compliance Plan [326 IAC 6.8-8-1] [326 IAC 6.8-8-8] 73
C.13 Instrument Specifications [326 IAC 2-1.1-11] [326 IAC 2-7-5(3)] [326 IAC 2-7-6(1)] 73

Corrective Actions and Response Steps [326 IAC 2-7-5][326 IAC 2-7-6] 73
C.14 Emergency Reduction Plans [326 IAC 1-5-2] [326 IAC 1-5-3] 73
C.15 Risk Management Plan [326 IAC 2-7-5(12)] [40 CFR 68] 73
C.16 Response to Excursions or Exceedances [40 CFR 64][326 IAC 3-8] [326 IAC 2-7-5] [326 IAC 2-7-6] 73
C.17 Actions Related to Noncompliance Demonstrated by a Stack Test [326 IAC 2-7-5][326 IAC 2-7-6] 76

Record Keeping and Reporting Requirements [326 IAC 2-7-5(3)] [326 IAC 2-7-19] 76
C.18 Emission Statement [326 IAC 2-7-5(3)(C)(iii)][326 IAC 2-7-5(7)][326 IAC 2-7-19(c)][326 IAC 2-6] 76
C.19 General Record Keeping Requirements [326 IAC 2-7-5(3)] [326 IAC 2-7-6] [326 IAC 2-2][326 IAC 2-3] 76
C.20 Sulfur Record keeping Requirements (Entire Source) [326 IAC 7-4.1-20(c)(1)] 78
C.21 General Reporting Requirements [326 IAC 2-7-5(3)(C)] [326 IAC 2-1.1-11] [326 IAC 2-2][326 IAC 2-3][40 CFR 64][326 IAC 3-8] 78
C.22 Sulfur Dioxide (SO2) Reporting Requirements (Entire Source) [326 IAC 7-4.1-20(c)(2)] 80

Stratospheric Ozone Protection 81
C.23 Compliance with 40 CFR 82 and 326 IAC 22-1 81

SECTION D.1 FACILITY OPERATION CONDITIONS 82

Emission Limitations and Standards [326 IAC 2-7-5(1)] 82
D.1.1 Lake County PM_{10} Emission Requirements [326 IAC 6.8-2-38] [326 IAC 11-3-2(a)] 82
D.1.2 Fugitive Dust Emission Limitations [326 IAC 6-4-2][326 IAC 6.8-10-3] 83
D.1.3 Coke Oven Battery Emission Limitations - Precarbonization [326 IAC 6.8-9-3(a)(9)(A)] [326 IAC 11-3-2(a)(1)] 84
D.1.4 Opacity Limitations [326 IAC 6.8-9-3(a)(9)(B)] 84
D.1.5 Coke Oven Battery Opacity Limitations [326 IAC 11-3-2(a)(2)] 84
D.1.6 Sulfur Dioxide (SO_2) Limitations [326 IAC 7-4.1-20(c)(3)] 84

Compliance Determination Requirements 84
D.1.7 Testing Requirements [326 IAC 2-7-6(1),(6)][326 IAC 2-1.1-11] 84
D.1.8 Particulate Matter Control 85

Compliance Monitoring Requirements 85
D.1.9 Electrostatic Precipitator (ESPs) Compliance Assurance Monitoring (CAM) [40 CFR Part 64] 85

Record Keeping and Reporting Requirements [326 IAC 2-7-5(3)] [326 IAC 2-7-19] 85
D.1.10 Record Keeping Requirements 85
D.1.11 Reporting Requirements 86

SECTION D.2 OPERATION CONDITIONS 87

Emission Limitations and Standards [326 IAC 2-7-5(1)] 88
D.2.1 Lake County PM_{10} Emission Requirements [326 IAC 6.8-2-38] [326 IAC 6.8-9-3(a)(8)] [326 IAC 11-3-2(i)] 88
D.2.2 Lake County PM10 Coke Battery Emission Requirements [326 IAC 6.8-9] 89

D.2.3 Emission Limitations for Coke Oven Batteries [326 IAC 11-3-2] 90
D.2.4 Coke Oven Identification [326 IAC 11-3-3] 91
D.2.5 Sulfur Dioxide (SO_2) Limitations [326 IAC 7-4.1-20] [326 IAC 11-3-2(i)] 91
D.2.6 Nitrogen Oxide (NO_X) Limitations PSD [326 IAC 2-2] and Emissions Offsets [326 IAC 2-3] 92
D.2.7 Prevention of Significant Deterioration (PSD) Minor Limit PM/PM10/NOx/SO2/CO/VOC [326 IAC 2-2] Nonattainment New Source Review (NSR) Minor Limit PM2.5/SO2 [326 IAC 2-1.1-5] 92

Compliance Determination Requirements 93
D.2.8 Testing Requirements [326 IAC 2-7-6(1), (6)] [326 IAC 2-1.1-11] 93
D.2.9 Visible Emission Inspections for Charging [326 IAC 11-3-4(a)] 93
D.2.10 Charge Port Lids and Off take Piping - Emissions Testing [326 IAC 11-3-4(b)] 94
D.2.11 Visible Emissions for Oven Doors [326 IAC 11-3-4(c)] 94
D.2.12 Visible Emissions Inspections for Gas Collector Main [326 IAC 11-3-4(e)] 95
D.2.13 Visible Emissions Inspections Pushing [326 IAC 6.8-9-3(3)] 95
D.2.14 Sulfur Fuel Sampling and Analysis [326 IAC 7-4.1-2)] 95
D.2.15 Particulate Matter Control [326 IAC 2-7-6(6)] 95

Compliance Monitoring Requirements [326 IAC 2-7-6(1)][326 IAC 2-7-5(1)] 96
D.2.16 Visible Emissions Notations 96
D.2.17 Parametric Monitoring 96
D.2.18 Continuous Opacity Monitoring (COM) [326 IAC 3-5] 96
D.2.19 Maintenance of Continuous Opacity Monitoring Equipment [326 IAC 2-7-5(3)(A)(iii)] 97

Record Keeping and Reporting Requirements [326 IAC 2-7-5(3)] [326 IAC 2-7-19] 97
D.2.20 Record Keeping Requirements 97
D.2.21 Reporting Requirements 98

SECTION D.3 FACILITY OPERATION CONDITIONS 99

Emission Limitations and Standards [326 IAC 2-7-5(1)] 101
D.3.1 Particulate Emissions Limitations [326 IAC 6.8-1-2(a)] 101

SECTION D.4 FACILITY OPERATION CONDITIONS 102

Emission Limitations and Standards [326 IAC 2-7-5(1)] 102
D.4.1 Lake County PM_{10} Emission Requirements [326 IAC 6.8-2-38] 102
D.4.2 Sulfur Dioxide (SO_2) Emissions Limitations [326 IAC 7-4.1-20] 102

Record Keeping and Reporting Requirements [326 IAC 2-7-5(3)] [326 IAC 2-7-19] 102
D.4.3 Record Keeping Requirements 102
D.4.4 Reporting Requirements 103

SECTION D.5 FACILITY OPERATION CONDITIONS 104

Emission Limitations and Standards [326 IAC 2-7-5(1)] 104
D.5.1 Lake County PM_{10} Emission Requirements [326 IAC 6.8-2-38] [326 IAC 6.8-1-2(b)] 104
D.5.2 Sulfur Dioxide (SO_2) Limitations [326 IAC 7-4.1-20] 105
D.5.3 Nonattainment NSR Minor Limits [326 IAC 2-1.1-5] 106
D.5.4 PSD Minor Limits [326 IAC 2-2] 106

Compliance Determination Requirements 106
D.5.5 Testing Requirements [326 IAC 2-7-6(1),(6)] [326 IAC 2-1.1-11] [326 IAC 2-1.1-5] 106
D.5.6 Sulfur Fuel Sampling and Analysis [326 IAC 7-4.1-2] 107
D.5.7 Particulate Matter Control 107

Compliance Monitoring Requirements [326 IAC 2-7-6(1)] [326 IAC 2-7-5(1)] 107
D.5.8 Continuous Emissions Monitoring [326 IAC 3-5] [326 IAC 2-7-6(1),(6)] 107

Record Keeping and Reporting Requirement [326 IAC 2-7-5(3)] [326 IAC 2-7-19] 107
D.5.9 Record Keeping Requirements 107
D.5.10 Reporting Requirements 107

SECTION D.6 FACILITY OPERATION CONDITIONS 109

Emission Limitations and Standards [326 IAC 2-7-5(1)] 109
D.6.1 Particulate Emissions Offset [326 IAC 2-3] 109
D.6.2 Lake County PM_{10} Emission Requirements [326 IAC 6.8-2-38] 109
D.6.3 Sulfur Dioxide (SO_2) Limitations [326 IAC 7-4.1-20] 110
D.6.4 Volatile Organic Compounds (VOC) Limitations [326 IAC 8-13-3] 110

Compliance Determination Requirements 112
D.6.5 Testing Requirements [326 IAC 2-7-6(1),(6)][326 IAC 2-1.1-11] 112
D.6.6 Particulate Matter Control 112

Compliance Monitoring Requirements [326 IAC 2-7-6(1)][326 IAC 2-7-5(1)] 113
D.6.7 Visible Emissions Notations 113
D.6.8 Parametric Monitoring 113
D.6.9 Scrubber Failure Detection 114
D.6.10 Continuous Emissions Monitoring (VOC)[326 IAC 8-13-8][326 IAC 3-5] 114
D.6.11 VOC Monitoring Downtime [326 IAC 2-7-6] [326 IAC 2-7-5(3)] 115

Record Keeping and Reporting Requirements [326 IAC 2-7-5(3)] [326 IAC 2-7-19] 115
D.6.12 Record Keeping Requirements 115
D.6.13 Reporting Requirements 116

Section D.7 Facility Operation Conditions 117

Emission Limitations and Standards [326 IAC 2-7-5(1)] 119
D.7.1 Emission Offset Minor Limitation [326 IAC 2-3] 119
D.7.2 PSD Minor Limit PM/PM_{10} [326 IAC 2-2] 119
D.7.3 Nonattainment New Source Review (NSR) Minor Limit [326 IAC 2-1.1-5] 119
D.7.4 Particulate Emission Limitation [326 IAC 6.8-1-2(a)] 119
D.7.5 Lake County PM_{10} Emission Requirements [326 IAC 6.8-2-38] 120
D.7.6 Fugitive Dust Emission Limitations [326 IAC 6-4-2][326 IAC 6.8-10-3] 120
D.7.7 Sulfur Dioxide (SO_2) Limitations [326 IAC 7-4.1-20(a)(1)(I)(J) and (K) 121
D.7.8 Carbon Monoxide (CO) Limitations [326 IAC 9-1-2(2)] 122

Compliance Determination Requirements 122
D.7.9 Testing Requirements [326 IAC 2-7-6(1),(6)][326 IAC 2-1.1-11] 122
D.7.10 Sulfur Fuel Sampling and Analysis [326 IAC 7-4-1.1(d)] 122
D.7.11 Particulate Matter and CO Control [326 IAC 2-7-6(6)] 122
D.7.12 Fugitive Dust Control 123

Compliance Monitoring Requirements [326 IAC 2-7-6(1)][326 IAC 2-7-5(1)] 123
D.7.13 Visible Emissions Notations 123
D.7.14 Parametric Monitoring 124

Record Keeping and Reporting Requirements [326 IAC 2-7-5(3)] [326 IAC 2-7-19] 124
D.7.15 Record Keeping Requirements 124
D.7.16 Reporting Requirements 125
D.7.17 Actual to Projected Actual Applicability Test [326 IAC 2-2-2(d)] [326 IAC 2-2-3(c)] 125
D.7.18 Volatile Organic Compounds (VOC) De Minimis [326 IAC 2-3-2(b)] 126

SECTION D.8 FACILITY OPERATION CONDITIONS 127

Emission Limitations and Standards [326 IAC 2-7-5(1)] 128
D.8.1 Lake County PM_{10} Emission Requirements [326 IAC 6.8-2-38] 128
D.8.2 Particulate Emissions Limitations [326 IAC 6.8-1-2(a)] 128
D.8.3 Sulfur Dioxide (SO_2) Limitations [326 IAC 7-4.1-20(c)(3)] 128
D.8.4 Sulfur Dioxide (SO_2) Limitations Hot Metal Transfer and Desulfurization Stations [326 IAC 7-4.1-20] 128

Compliance Determination Requirements 129
D.8.5 Particulate Matter Testing Requirements [326 IAC 2-7-6(1),(6)][326 IAC 2-1.1-11] 129
D.8.6 Sulfur Dioxide Testing Requirements 129
D.8.7 Particulate Matter Control [326 IAC 2-7-6(6)] 130

Compliance Monitoring Requirements [326 IAC 2-7-6(1)][326 IAC 2-7-5(1)] 130
D.8.8 Visible Emissions Notations 130
D.8.9 Parametric Monitoring 130
D.8.10 Scrubber Failure Detection 131

Record Keeping and Reporting Requirements [326 IAC 2-7-5(3)] [326 IAC 2-7-19] 131
D.8.11 Record Keeping Requirements 131

SECTION D.9 FACILITY OPERATION CONDITIONS 133

Emission Limitations and Standards [326 IAC 2-7-5(1)] 134
D.9.1 PSD Minor Limit [326 IAC 2-2] 134
D.9.2 Lake County PM_{10} Emission Requirements [326 IAC 6.8-2-38] 135
D.9.3 Particulate Emissions Limitations [326 IAC 6.8-1-2(a)] 136
D.9.4 Sulfur Dioxide (SO_2) Limitations [326 IC 7-4.1-20(c)(3)] 136
D.9.5 Sulfur Dioxide (SO_2 Limitations – Hot Metal Transfer and Desulfurization Stations [326 IAC 7-4.1-20] 136
D.9.6 Carbon Monoxide (CO) Limitations 326 IAC 9-1-2 136

Compliance Determination Requirements 136
D.9.7 Particulate Testing Requirements [326 IAC 2-7-6(1),(6)][326 IAC 2-1.1-11] 136
D.9.8 Sulfur Dioxide (SO_2) Testing Requirements 137
D.9.9 Particulate Matter Control [326 IAC 2-7-6(6)] 137
D.9.10 Carbon Monoxide (CO) Control 138

Compliance Monitoring Requirements [326 IAC 2-7-6(1)][326 IAC 2-7-5(1)] 138
D.9.11 Visible Emissions Notations 138
D.9.12 Parametric Monitoring 139
D.9.13 Scrubber Failure Detection 139

Record Keeping and Reporting Requirements [326 IAC 2-7-5(3)] [326 IAC 2-7-19] 140
D.9.14 Record Keeping Requirements 140

SECTION D.10 FACILITY OPERATION CONDITIONS 141

Emission Limitations and Standards [326 IAC 2-7-5(1)] 141
D.10.1 Lake County PM_{10} Emission Requirements [326 IAC 6.8-2-38] 141
D.10.2 Sulfur Dioxide (SO_2) Limitations [326 IAC 7-4.1-20] 141

Compliance Determination Requirements 142
D.10.3 Testing Requirements [326 IAC 2-7-6(1),(6)][326 IAC 2-1.1-11] 142
D.10.4 Lake County PM10 Emissions 143
D.10.5 Sulfur Fuel Sampling and Analysis [326 IAC 7-4.1-2] 143

Record Keeping and Reporting Requirements [326 IAC 2-7-5(3)] [326 IAC 2-7-19] 143
D.10.6 Record Keeping Requirements 143
D.10.7 Reporting Requirements 144

SECTION D.11 FACILITY OPERATION CONDITIONS 145

Emission Limitations and Standards [326 IAC 2-7-5(1)] 145
D.11.1 Particulate (PM) Limitation [326 IAC 6.8-1-2(a)] 145

SECTION D.12 FACILITY OPERATION CONDITIONS 146

Emission Limitations and Standards [326 IAC 2-7-5(1)] 147
D.12.1 Lake County PM_{10} Emission Requirements [326 IAC 6.8-2-38] 147
D.12.2 Particulate Emissions Limitations [326 IAC 6.8-1-2(a)] 147
D.12.3 Nitrogen Dioxide (NO_X) Emissions Offset Limitations [326 IAC 2-3] 147
D.12.4 Sulfur Dioxide (SO_2) Limitations [326 IAC 7-4.1-20(c)(3)] 147

Record Keeping and Reporting Requirements [326 IAC 2-7-5(3)] [326 IAC 2-7-19] 147
D.12.5 Record Keeping Requirements 147
D.12.6 Reporting Requirements 148

SECTION D.13 FACILITY OPERATION CONDITIONS 149

Emission Limitations and Standards [326 IAC 2-7-5(1)] 150
D.13.1 Particulate Emissions Limitations [326 IAC 6.8-1-2(a)] 150
D.13.2 Sulfur Dioxide (SO_2) Limitations [326 IAC 7-4.1-20(c)(3)] 150

Record Keeping and Reporting Requirements [326 IAC 2-7-5(3)] [326 IAC 2-7-19] 150
D.13.3 Record Keeping Requirements 150

SECTION D.14 FACILITY OPERATION CONDITIONS 151

Emission Limitations and Standards [326 IAC 2-7-5(1)] 151
D.14.1 Lake County PM_{10} Emission Requirements [326 IAC 6.8-2-38] 151
D.14.2 Sulfur Dioxide (SO_2) Limitations [326 IAC 7-4.1-20] 151

Compliance Determination Requirements 152
D.14.3 Sulfur Fuel Sampling and Analysis [326 IAC 7-4.1-2] 152
D.14.4 Lake County PM10 Emissions 152

Compliance Monitoring Requirements [326 IAC 2-7-6(1)] [326 IAC 2-7-5(1)] 153
D.14.5 Visible Emission Notations 153

Record Keeping Requirements [326 IAC 2-7-5(3)] [326 IAC 2-7-19] 153
D.14.6 Record Keeping Requirements 153
D.14.7 Reporting Requirements 154

SECTION D.15 FACILITY OPERATION CONDITIONS 155

Emission Limitations and Standards [326 IAC 2-7-5(1)] 155
D.15.1 Lake County PM_{10} Emissions Requirements [326 IAC 6.8-2-38] 155
D.15.2 Sulfur Dioxide (SO_2) Limitations [326 IAC 7-4.1-20] 155
D.15.3 PSD Nitrogen Oxides (NO_X) Emission Offset Limitations [326 IAC 2-2] [326 IAC 2-3] .. 157
D.15.4 Nitrogen Oxides (NO_X) Limitations 158

Compliance Determination Requirements 158
D.15.5 Lake County PM10 Emissions 158
D.15.6 Sulfur Fuel Sampling and Analysis [326 IAC 7-4.1-2] 159

Compliance Monitoring Requirements [326 IAC 2-7-6(1)] [326 IAC 2-7-5(1)] 159
D.15.7 Visible Emission Notations 159

Record Keeping and Reporting Requirements [326 IAC 2-7-5(3)] [326 IAC 2-7-19] 159
D.15.8 Record Keeping Requirements 159
D.15.9 Reporting Requirements 160

SECTION D.16 FACILITY OPERATION CONDITIONS 161

Emission Limitations and Standards [326 IAC 2-7-5(1)] 161
D.16.1 Particulate Matter (PM) Lake County Fugitive Dust Limits [326 IAC 6.8-10-4] 161

Compliance Determination Requirements 161
D.16.2 Particulate Matter Control 161

Record Keeping and Reporting Requirement [326 IAC 2-7-5(3)] [326 IAC 2-7-19] 163
D.16.3 Record Keeping Requirements 163
D.16.4 Reporting Requirements 164

Section D.17 FACILITY OPERATION CONDITIONS 165

Emission Limitations and Standards 168
D.17.1 Fugitive Dust Emission Limitations [326 IAC 6-4-2][326 IAC 6.8-10-3] 168
D.17.2 Volatile Organic Compounds (VOC) [326 IAC 8-3-2] 169
D.17.3 Volatile Organic Compounds (VOC) [326 IAC 8-3-3 169
D.17.4 Volatile Organic Compounds (VOC) [326 IAC 8-3-4] 170
D.17.5 Volatile Organic Liquid Storage Vessels [326 IAC 8-9-1] 170

Section D.18 FACILITY OPERATION CONDITIONS 171

Emission Limitations and Standards 174
D.18.1 Prevention of Significant Deterioration (PSD) Minor Limit PM/PM10/NOx/SO2/CO/VOC [326 IAC 2-2] Nonattainment New Source Review (NSR) Minor Limit PM2.5/SO2 [326 IAC 2-1.1-5] 174
D.18.1.1 Prevention of Significant Deterioration (PSD) Minor Limit PM/PM10 [326 IAC 2-2] Nonattainment New Source Review (NSR) Minor Limit PM2.5/SO2 [326 IAC 2-1.1-5] . 176
D.18.2 Particulate Emission Limitation [326 IAC 6.8-1-2(a)] 176

Compliance Determination Requirements 176
D.18.3 Particulate Control 176
D.18.4 Spray Scrubber Operation 176
D.18.5 Feed Enhancement Reactor (FER) Afterburner and Particle Fusion Reactor (PFR) Afterburner Operation 176
D.18.6 Testing Requirements [326 IAC 2-7-6(1),(6)][326 IAC 2-1.1-11] 177

Compliance Monitoring Requirements [326 IAC 2-7-6(1)] [326 IAC 2-7-5(1)] 178
D.18.7 Feed Enhancement Reactor Afterburner and Particle Fusion Reactor Afterburner Temperature Monitoring 178
D.18.8 Coal Tar Reclaimer Temperature Monitoring 178
D.18.9 Scrubber Monitoring [40 CFR Part 64] 179
D.18.10 Visible Emissions Notations [40 CFR Part 64] 179
D.18.11 Parametric Monitoring Notations [40 CFR Part 64] 180
D.18.12 Broken or Failed Bag Detection [40 CFR Part 64] 180
D.18.13 Cyclone Failure Detection [40 CFR Part 64] 180

Record Keeping and Reporting Requirement [326 IAC 2-7-5(3)] [326 IAC 2-7-19] 180
D.18.14 Record Keeping Requirements 180

Section D.19 FACILITY OPERATION CONDITIONS 182

Emission Limitations and Standards 186
D.19.1 Prevention of Significant Deterioration (PSD) Minor Limit PM/PM10 [326 IAC 2-2] Nonattainment New Source Review (NSR) Minor Limit PM2.5 [326 IAC 2-1.1-5] 186
D.19.1.1 Prevention of Significant Deterioration (PSD) Minor Limit PM/PM10 [326 IAC 2-2] Nonattainment New Source Review (NSR) Minor Limit PM2.5/SO2 [326 IAC 2-1.1-5] . 189
D.19.2 Particulate Emission Limitation [326 IAC 6.8-1-2(a)] 189

Compliance Determination Requirements 189
D.19.3 Particulate Control 189
D.19.4 Testing Requirements [326 IAC 2-7-6(1),(6)][326 IAC 2-1.1-11] 189

Compliance Monitoring Requirements [326 IAC 2-7-6(1)] [326 IAC 2-7-5(1)] 192
D.19.5 Visible Emissions Notations 192
D.19.6 Parametric Monitoring Notations 193
D.19.7 Broken or Failed Bag Detection 193

Record Keeping and Reporting Requirement [326 IAC 2-7-5(3)] [326 IAC 2-7-19] 193
D.19.8 Record Keeping Requirements 193

Section D.20 FACILITY OPERATION CONDITIONS 195

Emission Limitations and Standards 198
D.20.1 Prevention of Significant Deterioration (PSD) Minor Limit PM/PM10 [326 IAC 2-2] Nonattainment New Source Review (NSR) Minor Limit PM2.5 [326 IAC 2-1.1-5] 198
D.20.1.1 Prevention of Significant Deterioration (PSD) Minor Limit PM/PM10 [326 IAC 2-2] Nonattainment New Source Review (NSR) Minor Limit PM2.5/SO2 [326 IAC 2-1.1-5] . 203
D.20.2 Fugitive Dust Emission Limitations [326 IAC 6-4-2][326 IAC 6.8-10-3] 203
D.20.3 Particulate Emission Limitation [326 IAC 6.8-1-2(a)] 204

Compliance Determination Requirements 204
D.20.4 Particulate Matter Control 204

Record Keeping and Reporting Requirement [326 IAC 2-7-5(3)] [326 IAC 2-7-19] 206
D.20.5 Record Keeping Requirements 206
D.20.6 Reporting Requirements 207

Section D.21 FACILITY OPERATION CONDITIONS 208

Emission Limitations and Standards 210
D.21.1 Particulate Emission Limitation [326 IAC 6.8-1-2(a)] 210
D.21.2 Volatile Organic Liquid Storage Vessels [326 IAC 8-9-1] 210

SECTION D.22 FACILITY OPERATION CONDITIONS 211

Emission Limitations and Standards [326 IAC 2-7-5(1)] 211
D.22.1 PSD Minor Limit (NO_X) [326 IAC 2-2] 211
D.22.2 PM and PM_{10} Minor Limits [326 IAC 2-2][326 IAC 2-1.1-5] 211
D.22.3 Particulate Limitations [326 IAC 6.8-1-2(a)] 211

Compliance Determination Requirements 212
D.22.4 Testing Requirements 212
D.22.5 Particulate Matter Control [326 IAC 2-7-6(6)] 212

Compliance Monitoring Requirements [326 IAC 2-7-6(1)] [326 IAC 2-7-5(1)] 212
D.22.6 Visible Emissions Notations 212
D.22.7 Parametric Monitoring 213

Record Keeping and Reporting Requirements [326 IAC 2-7-5(3)] [326 IAC 2-7-19] 213
D.22.8 Record Keeping Requirements 213
D.22.9 Reporting Requirements 213

SECTION D.23 Facility Operation Conditions 214

Emission Limitations and Standards [326 IAC 2-7-5(1)] 214
D.23.1 PM and PM_{10} Minor Limits [326 IAC 2-2][326 IAC 2-1.1-5] 214
D.23.2 Particulate Limitations [326 IAC 6.8-1-2(a)] 214

Compliance Determination Requirements 214
D.23.3 Testing Requirements 214
D.23.4 Particulate Control 215

Record Keeping and Reporting Requirements [326 IAC 2-7-5(3)] [326 IAC 2-7-19] 215
D.23.5 Record Keeping Requirements 215

SECTION D.24 FACILITY OPERATION CONDITIONS 216

Emission Limitations and Standards [326 IAC 2-7-5(1)] 216
D.24.1 PSD Minor Limit (NO_X) [326 IAC 2-2] 216
D.24.2 Fugitive Dust Emission Limitations [326 IAC 6-4-2][326 IAC 6.8-10-3] 216

Record Keeping and Reporting Requirements [326 IAC 2-7-5(3)] [326 IAC 2-7-19] 217
D.24.3 Record Keeping Requirements 217
D.24.4 Reporting Requirements 217

SECTION D.25 FACILITY OPERATION CONDITIONS 218

Emission Limitations and Standards [326 IAC 2-7-5(1)] 219
D.25.1 PM and PM_{10} Minor Limits [326 IAC 2-2][326 IAC 2-1.1-5] 219
D.25.2 Particulate Limitations [326 IAC 6.8-1-2(a)] 219

Compliance Determination Requirements 219
D.25.3 Testing Requirements 219
D.25.4 Particulate Control 220
D.25.5 Fugitive Dust Control 220

Record Keeping and Reporting Requirements [326 IAC 2-7-5(3)] [326 IAC 2-7-19] 221
D.25.6 Record Keeping Requirements 221

SECTION D.26 FACILITY OPERATION CONDITIONS 222

Emission Limitations and Standards [326 IAC 2-7-5(1)] 222
D.26.1 Volatile Organic Compounds (VOC) [326 8-3-5] 222
D.26.2 Volatile Organic Compounds (VOC) [326 IAC 8-3-8] (Material require¬ments for cold cleaning degreasers) 223
D.26.3 Volatile Organic Liquid Storage Vessels [326 IAC 8-9-1] 224

SECTION D.27 FACILITY OPERATION CONDITIONS 225

Emission Limitations and Standards [326 IAC 2-7-5(1)] 225
D.27.1 Particulate Emissions Limitations [326 IAC 6.8-1-2(a)] 225

SECTION E.1 Nitrogen Oxides Budget Trading Program - NOX Budget Permit for NOX Budget Units Under 326 IAC 10-4-1(a) 226

E.1.1 Automatic Incorporation of Definitions [326 IAC 10-4-7(e)] 226
E.1.2 Standard Permit Requirements [326 IAC 10-4-4(a)] 226
E.1.3 Monitoring Requirements [326 IAC 10-4-4(b)] 226
E.1.4 Nitrogen Oxides Requirements [326 IAC 10-4-4(c)] 227

E.1.5 Excess Emissions Requirements [326 IAC 10-4-4(d)] 227
E.1.6 Record Keeping Requirements [326 IAC 10-4-4(e)] [326 IAC 2-7-5(3)] 228
E.1.7 Reporting Requirements [326 IAC 10-4-4(e)] 228
E.1.8 Liability [326 IAC 10-4-4(f)] 229
E.1.9 Effect on Other Authorities [326 IAC 10-4-4(g)] 229

SECTION E.2 Clean Air Interstate (CAIR) Nitrogen Oxides Ozone Season Trading Program – CAIR Permit for CAIR Units Under 326 IAC 24-3-1(a) 230

E.2.1 Automatic Incorporation of Definitions [326 IAC 24-3-7(e)] [40 CFR 97.323(b)] 230
E.2.2 Standard Permit Requirements [326 IAC 24-3-4(a)] [40 CFR 97.306(a)] 230
E.2.3 Monitoring, Reporting, and Record Keeping Requirements [326 IAC 24-3-4(b)] [40 CFR 97.306(b)] 230
E.2.4 Nitrogen Oxides Ozone Season Emission Requirements [326 IAC 24-3-4(c)] [40 CFR 97.306(c)] 231
E.2.5 Excess Emissions Requirements [326 IAC 24-3-4(d)] [40 CFR 97.306(d)] 231
E.2.6 Record Keeping Requirements [326 IAC 24-3-4(e)] [326 IAC 2-7-5(3)] [40 CFR 97.306(e)] 232
E.2.7 Reporting Requirements [326 IAC 24 3 4(e) [40 CFR 97.306(e)] 232
E.2.8 Liability [326 IAC 24-3-4(f)] [40 CFR 97.306(f)] 233
E.2.9 Effect on Other Authorities [326 IAC 24-3-4(g)] [40 CFR 97.306(g)] 233

SECTION F.1 FACILITY OPERATION CONDITIONS - NSPS, SUBPART Dc 234

New Source Performance Standards (NSPS) Requirements [326 IAC 2-7-5(1)] 235
F.1.1 General Provisions Relating to New Source Performance Standards [40 CFR Part 60, Subpart A] [326 IAC 12-1] 235
F.1.2 Standards of Performance for Small Industrial-Commercial-Institutional Steam Generating Units [40 CFR Part 60, Subpart Dc] [326 IAC 12] 235

SECTION F.2 FACILITY OPERATION CONDITIONS - NSPS, SUBPART Y 236

New Source Performance Standards (NSPS) Requirements [326 IAC 2-7-5(1)] 243
F.2.1 General Provisions Relating to New Source Performance Standards [40 CFR Part 60, Subpart A] [326 IAC 12-1] 243
F.2.2 Standards of Performance for Coal Preparation Plants [40 CFR Part 60, Subpart Y] [326 IAC 12] 243

SECTION F.3 FACILITY OPERATION CONDITIONS - NSPS, SUBPART D 245

New Source Performance Standards (NSPS) Requirements [326 IAC 2-7-5(1)] 245
F.3.1 General Provisions Relating to New Source Performance Standards [40 CFR Part 60, Subpart A] [326 IAC 12-1] 245
F.3.2 Standards of Performance for Fossil-Fuel-Fired Steam Generators [40 CFR Part 60, Subpart D] [326 IAC 12] 245

SECTION F.4 FACILITYOPERATION CONDITIONS - NSPS, SUBPART Db 246

New Source Performance Standards (NSPS) Requirements [326 IAC 2-7-5(1)] 246
F.4.1 General Provisions Relating to New Source Performance Standards [40 CFR Part 60, Subpart A] [326 IAC 12-1] 246
F.4.2 Standards of Performance for Industrial-Commercial-Institutional Steam Generating Units [40 CFR Part 60, Subpart Db] [326 IAC 12] 246

SECTION F.5 FACILITY OPERATION CONDITIONS - NSPS, SUBPART IIII 247

New Source Performance Standards (NSPS) Requirements [326 IAC 2-7-5(1)] 248
F.5.1 General Provisions Relating to New Source Performance Standards [40 CFR Part 60, Subpart A] [326 IAC 12-1] 248

F.5.2 Standards of Performance for Stationary Compression Ignition Internal Combustion Engines [40 CFR Part 60, Subpart IIII] [326 IAC 12] 248

SECTION F.6 FACILITY OPERATION CONDITIONS - NESHAP, SUBPART ZZZZ 250

National Emissions Standards for Hazardous Air Pollutants 250
F.6.1 General Provisions Relating to NESHAP [326 IAC 20-1] [40 CFR Part 63, Subpart A] . 250
F.6.2 National Emissions Standards for Hazardous Air Pollutants for Stationary Reciprocating Internal Combustion Engines [40 CFR 63, Subpart ZZZZ] [326 IAC 20-82] 250

SECTION F.7 FACILITY OPERATION CONDITIONS - NESHAP, SUBPART L 251

National Emission Standards (NESHAP) Requirements..... 252
F.7.1 National Emissions Standards for Hazardous Air Pollutants for Coke Oven Batteries [40 CFR Part 63, Subpart L] [326 IAC 20-3] 252

SECTION F.8 FACILITY OPERATION CONDITIONS - NESHAP, SUBPART CCCCC 253

National Emissions Standards for Hazardous Air Pollutants 254
F.8.1 General Provisions Relating to NESHAP [326 IAC 20-1] [40 CFR Part 63, Subpart A] . 254
F.8.2 National Emissions Standards for Hazardous Air Pollutants for Coke Ovens: Pushing, Quenching, and Battery Stacks [40 CFR Part 63, Subpart CCCCC] [326 IAC 20-74] ... 254

SECTION F.9 FACILITY OPERATION CONDITIONS - NESHAP, SUBPART FFFFF 256

National Emissions Standards for Hazardous Air Pollutants 258
F.9.1 General Provisions Relating to NESHAP [326 IAC 20-1] [40 CFR Part 63, Subpart A] . 258
F.9.2 National Emissions Standards for Hazardous Air Pollutants for Integrated Iron and Steel Manufacturing Facilities [40 CFR Part 63, Subpart FFFFF] [326 IAC 20-93] 258

SECTION F.10 FACILITY OPERATION CONDITIONS - NESHAP, SUBPART CCC 260

National Emissions Standards for Hazardous Air Pollutants 260
F.10.1 General Provisions Relating to NESHAP [326 IAC 20-1] [40 CFR Part 63, Subpart A] . 260
F.10.2 National Emissions Standards for Hazardous Air Pollutants for Steel Pickling—HCl Process Facilities and Hydrochloric Acid Regeneration Plants [40 CFR Part 63, Subpart CCC] [326 IAC 20-29] 260

SECTION F.11 FACILITY OPERATION CONDITIONS - NESHAP, SUBPART L 261

National Emissions Standards for Hazardous Air Pollutants 264
F.11.1 General Provisions Relating to National Emission Standards for Hazardous Air Pollutants under 40 CFR 61 [326 IAC 14-1] [40 CFR Part 61, Subpart A] 264
F.11.2 National Emissions Standards for Benzene from Coke By-Products Recovery Plants [40 CFR 61, Subpart L] [326 IAC 14-9-1] 264

SECTION F.12 FACILITY OPERATION CONDITIONS - NESHAP, SUBPART V 265

National Emissions Standards for Hazardous Air Pollutants 268
F.12.1 General Provisions Relating to National Emission Standards for Hazardous Air Pollutants under 40 CFR Part 61 [326 IAC 14-1] [40 CFR Part 61, Subpart A] 268
F.12.2 National Emissions Standards for Equipment Leaks (Fugitive Emission Sources) [40 CFR 61, Subpart V] [326 IAC 14-8] 268

SECTION F.13 FACILITY OPERATION CONDITIONS - NESHAP, SUBPART FF 269

National Emissions Standards for Hazardous Air Pollutants 272
F.13.1 National Emissions Standards for Benzene Waste Operations [40 CFR 61, Subpart FF] 272

SECTION F.14 FACILITY OPERATION CONDITIONS - NESHAP, SUBPART DDDDD 273

National Emissions Standards for Hazardous Air Pollutants 274
F.14.1 General Provisions Relating to National Emission Standards for Hazardous Air Pollutants under 40 CFR Part 63 [326 IAC 20-1] [40 CFR Part 63, Subpart A] 274
F.14.2 Applicability of National Emission Standards for Hazardous Air Pollutants for Industrial, Commercial, and Institutional Boilers and Process Heaters Requirements [40 CFR Part 63, Subpart DDDDD]..... 275

CERTIFICATION..... 276
EMERGENCY OCCURRENCE REPORT 277
QUARTERLY DEVIATION AND COMPLIANCE MONITORING REPORT 279
PART 70 OPERATING PERMIT QUARTERLY REPORT 281

Attachments:

Attachment A Preventive Maintenance Plan General Plant Fugitive Dust Emissions

Attachment B 40 CFR 60, Subpart Dc - Standards of Performance for Small Industrial-Commercial-Institutional Steam Generating Units

Attachment C 40 CFR 60, Subpart Y - Standards of Performance for Coal Preparation and Processing Plants

Attachment D 40 CFR 60, Subpart D- Standards of Performance for Fossil-Fuel-Fired Steam Generators

Attachment E 40 CFR Part 60, Subpart Db - Standards of Performance for Industrial-Commercial-Institutional Steam Generating Units of Greater than 100 MMBtu/hr

Attachment F 40 CFR Part 60, Subpart IIII—Standards of Performance for Stationary Compression Ignition Internal Combustion Engines

Attachment G 40 CFR 63, Subpart ZZZZ - National Emissions Standards for Hazardous Air Pollutants for Stationary Reciprocating Internal Combustion Engine

Attachment H 40 CFR 63, Subpart L—National Emission Standards for Coke Oven Batteries

Attachment I 40 CFR 63, Subpart CCCCC - National Emission Standards for Hazardous Air Pollutants for Coke Ovens: Pushing, Quenching, and Battery Stacks

Attachment J 40 CFR 63, Subpart FFFFF - National Emission Standards for Hazardous Air Pollutants for Integrated Iron and Steel Manufacturing Facilities

Attachment K 40 CFR 63, Subpart CCC - National Emission Standards for Hazardous Air Pollutants for Steel Pickling—HCl Process Facilities and Hydrochloric Acid Regeneration Plants

Attachment L 40 CFR 61, Subpart L—National Emission Standard for Benzene Emissions from Coke By-Product Recovery Plants

Attachment M 40 CFR 61, Subpart V - National Emission Standard for Equipment Leaks (Fugitive Emission Sources)

Attachment N 40 CFR 61, Subpart FF - National Emission Standard for Benzene Waste Operations

Attachment O 40 CFR 63, Subpart DDDDD – National Emission Standards for Industrial, Commercial, and Institutional Boilers and Process Heaters

SECTION A SOURCE SUMMARY

This permit is based on information requested by the Indiana Department of Environmental Management (IDEM), Office of Air Quality (OAQ). The information describing the source contained in conditions A.1 through A.4 is descriptive information and does not constitute enforceable conditions. However, the Permittee should be aware that a physical change or a change in the method of operation that may render this descriptive information obsolete or inaccurate may trigger requirements for the Permittee to obtain additional permits or seek modification of this permit pursuant to 326 IAC 2, or change other applicable requirements presented in the permit application.

A.1 General Information [326 IAC 2-7-4(c)] [326 IAC 2-7-5(14)] [326 IAC 2-7-1(22)]

The Permittee owns and operates an integrated steel mill.

Source Address:	1 North Broadway, Gary, Indiana 46402
General Source Phone Number:	219-888-3387
SIC Code:	3312
County Location:	Lake
Source Location Status:	Nonattainment for 8-hour ozone Attainment or unclassifiable for all other criteria pollutants
Source Status:	Part 70 Permit Program Major Source, under PSD and Emission Offset; Major Source, Section 112 of the Clean Air Act; Greenhouse Gas (GHG) potential to emit (PTE) is equal to or more than one hundred thousand (100,000) tons of CO2 equivalent (CO2e) emissions per year 1 of 28 Source Categories

A.2 Part 70 Source Definition [326 IAC 2-7-1(22)]

This integrated steel mill includes the primary operation, U.S. Steel – Gary Works (Source ID 089-00121), at One North Broadway, Gary, Indiana, collocated with on-site contractors:

	Company Name	Source ID	Operation Description
1	U.S. Steel – Gary Works	089-00121	integrated steel mill
	On-Site Contractors		
2	Tube City IMS LLC	089-00132	slag processing/metal recovery
3	South Shore Slag LLC	089-00133	slag crushing, screening and conveying
4	Tube City IMS, LLC	089-00170	iron ore screening
5	Central Teaming Company Inc	089-00172	material handling
6	Mid-Continent Coal & Coke	089-00173	raw material segregation of metallurgical coke and coal
7	Tube City IMS LLC	089-00174	iron ore screening
8	AKJ Industries, Inc.	089-00505	coal tar sludge processing

A Part 70 permit will be issued to U.S. Steel – Gary Works (Source ID 089-00121). Separate Administrative Part 70 permits will be issued to each of the on-site contractors, solely for administrative purposes. The companies may maintain separate reporting and compliance certification.

A.3 Emission Units and Pollution Control Equipment Summary [326 IAC 2-7-4(c)(3)] [326 IAC 2-7-5(14)]

The integrated steel mill, U.S. Steel-Gary Works consists of the following:

Coal Handling Operation

(a) One (1) coal car bottom thaw shed (holding yard), identified as CHY00071, constructed in 1959, combusting coke oven gas, with a maximum heat input capacity of 25 MMBtu per hour, with an open flame heater, with uncontrolled fugitive emissions.

(b) One (1) coal car side thaw station, identified as CHT0001, constructed in 1959, combusting natural gas, with a maximum heat input capacity of 15 MMBtu per hour, with an open flame heater, with uncontrolled fugitive emissions.

(c) One (1) No. 2 Coke Battery Precarbonization facility, consisting of three (3) lines, Line A, Line B and Line C identified as CH2A0020, CH2B0021 and CH2C0022, constructed prior to October 24, 1974, each with a maximum capacity of 153.5 tons per hour. Particulate matter emissions from the three lines are controlled by electrostatic precipitators (ESP), ESP A, ESP B and ESP C, identified as CH3029, CH3030 and CH3031, exhausting through stacks CH6034, CH6035 and CH6037, respectively.

(d) One (1) coal crusher: system consisting of three (3) enclosed hammer mills with a maximum capacity of 160 tons per hour, three (3) enclosed hammer mills with a maximum capacity of 150 tons per hour, and (2) enclosed hammer mills with a maximum capacity of 100 tons per hour, with fugitive emissions contained within the coal blending building.

(e) One (1) enclosed petroleum coke crusher with a maximum capacity of 400 tons per hour which also operates as a coal breaker with a maximum capacity of 1200 tons per hour. This unit is a totally enclosed hammer mill with fugitive emissions contained within the coal blending building.

(f) Coal Handling Storage Facilities, identified as CHSQ0003.

(g) One (1) frozen coal breaker, installed in 1959, with a maximum capacity of 1300 tons per hour, with fugitive emissions contained within the coal blending building.

Coke Batteries

(a) No. 2 Coke Battery

(1) One (1) six (6) meter tall vertical flue coke battery with 57 ovens, No. 2 Coke Battery, identified as CP2B0079, constructed in November 1975, with a maximum charging capacity of 217 tons per hour. Excessive coke oven gas back pressure is controlled by three (3) flares lit with internal flare igniters CP3060, CP3061 and CP3062, exhausting to Bypass/Bleeder Flare Stacks CP6105, CP6106 and CP6107.

(2) The No. 2 Coke Battery underfiring system has a maximum combustion heat input capacity of 250 MMBtu per hour, exhausting to stack CP6040 equipped with a continuous opacity monitor (COM).

(3) The No. 2 Coke Battery has a maximum pushing capacity of 161 tons of coke per hour, with particulate emissions controlled by a Mobile Scrubber Car 9119, 9120, 9121 or 9122, identified as CP3034, exhausting to Stack CP6041.

(4) Nos. 2 and 3 Quench Towers identified as CP1Q0080 and CP2Q0081, constructed in 1975, with a maximum combined capacity of 322 tons of coke per hour, and No. 1 Quench Tower identified as CPQ0087 constructed in 1975 with a capacity of 322 tons of coke per hour, each equipped with a quench water header and baffle system with sprays. Nos. 2 and 3 Quench Towers service No. 2 Coke Battery. No. 1 Quench Tower services Nos. 2, 5 and 7 Coke Batteries.

(5) The No. 2 Coke Battery fugitive emissions are generated from charging operations, off take piping, door leaks, lid leaks and collector main leaks.

(b) No. 5 Coke Battery

(1) One (1) three (3) meter short vertical flue coke oven battery with 77 ovens, No. 5 Coke Battery, identified as CP5B0090, constructed in 1954, with a maximum charging capacity of 84 tons per hour. Excessive coke oven gas back pressure is controlled by two (2) flares lit with internal flare igniters CP3066 and CP3067, exhausting to Bypass/Bleeder Flare stacks CP6111 and CP 6112.

(2) The No. 5 Coke Battery underfiring system has a maximum combustion heat input capacity of 125 MMBtu per hour, exhausting to stack CP6049, equipped with a COM.

(3) The No. 5 and No. 7 Coke Batteries have a combined maximum pushing capacity of 103 tons of coke per hour, with particulate emissions controlled by a common baghouse, identified as CP3041, exhausting to stack CP6050.

(4) Nos. 5 and 6 Quench Towers identified as CP5Q0091 and CP5Q0095, constructed in 1954, with a maximum combined capacity of 103 tons of coke per hour, equipped with a quench water header and baffle system with sprays. These towers service Nos. 5 and 7 Coke Batteries.

(5) The No. 5 Coke Battery fugitive emissions are generated from charging operations, offtake piping, door leaks, lid leaks and collector main leaks.

(c) No. 7 Coke Battery

(1) One (1) three (3) meter short vertical flue coke oven battery, with 77 ovens, No. 7 Coke Battery, identified as CP7B0094, constructed in 1954, with a maximum charging capacity of 84 tons per hour. Excessive coke oven gas back pressure is controlled by two (2) flares lit with internal flare igniters CP3068 and CP3069, exhausting to Bypass/Bleeder Flare stacks CP6113 and CP6114.

(2) The No. 7 Coke Battery underfiring system has a maximum combustion heat input capacity of 125 MMBtu per hour, exhausting to stack CP6053 equipped with a COM.

(3) The No. 5 and No. 7 Coke Batteries have a combined maximum pushing capacity of 103 tons of coke per hour, with particulate emissions controlled by a common baghouse, identified as CP3041, exhausting to stack CP6050.

(4) No. 6 Quench Tower identified as CP5Q0095, constructed in 1954, with a maximum capacity of 103 tons of coke per hour, equipped with a quench water header and baffle system with sprays. This tower services Nos. 5 and 7 Coke Batteries.

(5) The No. 7 Coke Battery fugitive emissions are generated from charging operations, offtake piping, door leaks, lids leaks and collector main leaks.

(d) Natural Gas Underfiring Injection System Jets

Three (3) natural gas injection jets, identified as CPNGI001, CPNGI002 and CPNGI003, constructed in 2001, with heat input capacities of 22 MMBtu per hour, 43 MMBtu per hour and 122 MMBtu per hour, respectively. Natural gas injection provides Btu stabilization control, coke oven gas quality control and emergency gas supply to the battery underfiring system.

Coke By-Products Recovery Plant

(a) Control Station No. 1

(1) Four (4) Predecanters D-101A, D-101B, D-101C and D-101D, identified as CBP10100, CBP20101, CBP30102 and CBP30103, constructed in 1975, with vapors directed by a natural gas blanketing system CB3080 to Control Station No. 1 and into the 72- inch Suction Main.

(2) Two (2) Still Decanters D-102B and D-102A, identified as CBD00104 and CBD00105, constructed in 1975, with vapors directed by a natural gas blanketing system CB3080 to Control Station No. 1 and into the 72-inch Suction Main.

(3) Two (2) Gary Decanters D-5 and D-4, identified as CBD20107 and CBD30108, constructed in 1975 with vapors directed by a natural gas blanket system CB3080 to Control Station No. 1 and into the 72-inch Suction Main.

(4) One (1) Bleed-Off Tank B101, identified as CBB10106, constructed in 1975, with vapors directed by a natural gas blanketing system CB3080 to Control Station No. 1 and into the 72 inch Suction Main.

(5) One (1) Liquor Storage Tank T-7, identified as CBL10109, constructed in 1975, with vapors directed by a natural gas blanketing system CB3080 to Control Station No. 1 into the 72-inch Suction Main.

(6) Two (2) Tar Storage Tanks T-2 and T-3, identified as CBT00110 and CBT00111, constructed in 1968 with vapors, directed by a natural gas blanketing system CB3080 to Control Station No. 1 and into the 72-inch Suction Main.

(7) One (1) Storage Tank T-6, identified as CBT20112, constructed in 1968, with vapors, directed by a natural gas blanketing system CB3080 to Control Station No. 1 and into the 72-inch Suction Main.

(8) Two (2) PC Tar Storage Tanks T-363D and T-363A, identified as CBT30113 and CB40114, constructed in 1975, with vapors directed by a natural gas blanketing system CB3080 to Control Station No. 1 into the 72-inch Suction Main.

(9) One (1) Dry Tar Storage Tank T-9, identified as CBT50115, constructed in 1975, with vapors directed by a natural gas blanketing system CB3080 to Control Station No. 1 and into the 72 inch Suction Main.

(10) One (1) Sump S-9 serving Dry Tar Storage Tank ST-9, identified as CBS10116, constructed in 1991, with vapors, directed by a natural gas blanketing system CB3080 to Control Station No. 1 and into the 72-inch Suction Main.

(b) Control Station No. 2

(1) Three (3) Tar Tanks T-304C, T-304B and T-304A , identified as CBT60118, CBT70119, and CBT80121, constructed in 1990, 1953 and 1953, respectively, with vapors directed by a natural gas blanketing system CB3081 to Control Station No. 2 and into the 72-inch Suction Main.

(2) One (1) Tar Feed Tank T-306C, identified as CBTF0164, constructed in 1953, with vapors directed by a natural gas blanketing system CB3081 to Control Station No. 2 and into the 72 inch Suction Main.

(3) One (1) Wash Oil Tank T-331AN, identified as CBO10123, constructed in 1961, with vapors directed by a natural gas blanketing system CB3081 to Control Station No. 2 into the 72-inch Suction Main.

(4) Two (2) Light Oil Storage Tanks T-312 and T-311, identified as CBO20124 and CBO30125, constructed in 1953 with vapors directed by a natural gas blanketing system CB3081 to Control Station No. 2 and into the 72-inch Suction Main.

(5) One (1) sump S-304/306, constructed in 1996, with vapors directed by a natural gas blanketing system CB3081 to Control Station No. 2 and into the 72-inch Suction Main.

(c) Control Station No. 3

(1) Four (4) Predecanters D-105A, D-105B, D-105C and D-105D, identified as CBP70137, CBP80138, CBP50139 and CBP60140, constructed in 1976, with vapors directed by a natural gas blanketing system CB3082 to Control Station No. 3 and into the 72-inch Suction Main.

(2) Two (2) Still Decanters D-106A and D-106B, identified as CBD60134 and CBD70136, constructed in 1976, with vapors directed by a natural gas blanketing system CB3082 to Control Station No. 3 and into the 72-inch Suction Main.

(3) Two (2) Gary Decanters D-6 and D-7, identified as CBD40132 and CBD50133, constructed in 1976, with vapors directed by a natural gas blanketing system CB3082 to Control Station No. 3 and into the 72-inch Suction Main.

(4) Two (2) Tar Decanters D-5/7N and D-5/7S, identified as CBD80141 and CBD90142, constructed in 1953, with vapors directed by a natural gas blanketing system CB3082 to Control Station No. 3 and into the 72-inch Suction Main.

(5) One (1) Bleed-Off Tank B-104, identified as CBB20135, constructed in 1976 with vapors directed by a natural gas blanketing system CB3082 to Control Station No. 3 and into the 72-inch Suction Main.

(6) One (1) Liquor Surge Tank T-11, identified as CBL60131, constructed in 1975, with vapors directed by a natural gas blanketing system CB3082 to Control Station No. 3 and into the 72-inch Suction Main.

(d) Control Station No. 4

(1) Four (4) Circulating Liquor Decanters L-100B, L-100C, L-100D and L-100E, identified as CBC30127, CBC40128, CBC50129 and CBL80145, constructed in 1975, with vapors directed by a natural gas blanketing system CB3083 to Control Station No. 4 and into the 72-inch Suction Main.

(2) Two (2) Liquor Surge Tanks T-340A and T-340B, identified as CBC20126 and CBL70143, constructed in 1995, with vapors directed by a natural gas blanketing system CB3083 to Control Station No. 4 and into the 72-inch Suction Main.

(3) One (1) Primary Cooler Tank T-345A, identified as CBTF0130, constructed in 1995 with vapors directed by a natural gas blanketing system CB3083 to Control Station No. 4 and into the 72-inch Suction Main.

(e) Control Station No. 5

(1) One (1) Sump of Circulating Liquor Ls-100E, identified as CBS40144, constructed in 1991, with vapors directed by a natural gas blanketing system CB3051 to Control Station No. 5 and into the 72-inch Suction Main.

(2) Three (3) Tar Storage Tanks T-301,T-302A, T-302B, identified as CBTA0146, CBTB0147 and CBTC0148, constructed in 1948, 1930, and 1930, respectively, with vapors directed by a natural gas blanketing system CB3051 to Control Station No. 5 and into the 72-inch Suction Main.

(3) Two (2) Storage Tanks T-7100, T7110 and T-7120, constructed and refurbished in 1997, with vapors directed by a natural gas blanketing system CB3051 to Control Station No. 5 and into the 72-inch Suction Main.

(4) Two (2) Oil/Tar Separator Tanks, T-7000 and T-7010, constructed in 1997, with vapors directed by a natural gas blanketing system CB3051 to Control Station No. 5 and into the 72-inch Suction Main.

(5) Two (2) Oil and Tar Receiver Tanks, T-7020 and T-7030, constructed in 1997 with vapors directed by a natural gas blanketing system CB3051 to Control Station No. 5 and into the 72-inch Suction Main.

(f) One (1) Surge Tank T-7800, constructed in 1997, with vapors directed to a nitrogen gas blanketing system.

(g) Distillation Sump Emission Control

One (1) Distillation Sump Emission Control System, identified as CBS80151, constructed in 1989 with vapors directed to a nitrogen gas blanketing system.

(h) Coke Oven Gas (COG) High Pressure Control System, constructed in 1991, contains instrumentation and control valves designed to limit the maximum pressure in the COG distribution system. Excess COG pressure is directed to and combusted in a bleeder flare with emissions exhausting to Stack CG6077.

(i) Equipment in Benzene Service consist of several hundred components pumps, exhausters, valves, flanges and pressure relief devices in benzene service within the byproducts plant.

Coke Oven Gas (COG) Desulfurization Facility

(a) One (1) amine unit, constructed in 1997, removes hydrogen sulfide and other organic sulfur compounds from the coke oven gas (COG) stream.

(b) One (1) reflux unit, constructed in 1997, recycles ammonia and acid gas into the COG stream.

(c) One (1) hydrogen cyanide (HCN) destruction unit, constructed in 1997 converts HCN in the acid gas stream to ammonia to minimize corrosion to the Sulfur Recovery Unit.

(d) One (1) sulfur recovery unit, constructed in 1997, converts sulfur compounds in the acid gas stream to elemental sulfur. This sulfur is sold as a product.

(e) One (1) incineration unit, constructed in 1997, converts remaining sulfur compounds not removed by the sulfur recovery unit into sulfur dioxide.

Coke Plant Boiler House

(a) Two (2) Boilers, Nos. 1 and 2, identified as CSS10155 and CSS20156, constructed prior to 1970, with a maximum heat input capacity of 160 MMBtu per hour each, exhausting to stack CS6061. These boilers are equipped to combust natural gas.

(b) One (1) Boiler, No. 3, identified as CSS30157, constructed in 1943, with a maximum heat input capacity of 160 MMBtu per hour, exhausting to stack CS6062. This boiler is equipped to combust natural gas and coke oven gas.

(c) Two (2) Boilers, Nos. 4 and 5, identified as CSS40158 and CSS50159, constructed prior to 1955, with a maximum heat input of 170 MMBtu per hour each, exhausting to stack CS6063. These boilers are equipped to combust natural gas and coke oven gas.

(d) One (1) Boiler No. 6, identified as CSS60160, constructed in 1955, with a maximum heat input capacity of 170 MMBtu per hour, exhausting to stack CS6064. This boiler is equipped to combust natural gas and coke oven gas.

(e) One (1) Boiler, No. 7, identified as CS70161, constructed in 1976, with a maximum heat input capacity of 170 MMBtu per hour, exhausting to stack CS6065. This boiler is equipped to combust natural gas and coke oven gas.

(f) One (1) Boiler, No. 8, identified as CSS80162, constructed in 1981, with a maximum heat input capacity of 249 MMBtu per hour, exhausting to stack CS6066. This boiler is equipped to combust natural gas and coke oven gas.

(g) Two (2) boilers at the coke plant boiler house, identified as Boilers No. 9 CSS80164 and No. 10 CSS80165, constructed in 2004, each with a maximum heat input capacity of 235 MMBtu/hr, exhausting to stacks CS6067 and CS6068, respectively. These boilers are equipped to burn natural gas and coke oven gas.

(h) One (1) lime storage silo with a maximum capacity of 20 tons per hour and emissions controlled by a baghouse LRS-1, constructed in 2001, exhausting inside the building.

Number 3 Sinter Plant

(a) Three (3) Sinter Strands, constructed in 1958 , identified as ISS10379, ISS20380 and ISS30381, each with 50 MMBtu per hour reheat burners combusting natural gas and coke oven gas identified as ISB001, ISB002 and ISB003 and a maximum capacity of 225 tons of sinter per hour each, each with ignition hood burners with a combined heat input of 50 MMBtu/hr combusting natural gas and coke oven gas, controlled by two (2) Windbox Gas Cleaning Systems IS3203 and IS3204, installed in 1996, each comprised of a Quench Reactor, Dry Venturi Scrubber, a baghouse operated in series, exhausting to Windbox stacks IS6198 and IS6199 which are equipped with VOC CEMS.

(b) One (1) Cold Screen Station, identified as ISR00389, constructed in 1958, with a maximum capacity of 450 tons per hour, using a Baghouse IS3209 as a control device and exhausting to stack IS6207.

(c) One (1) S1/S2 Conveyer System, identified as ISY00388, constructed in 1979, with a maximum capacity of 450 tons per hour, that transfers sinter from the sinter coolers to the cold screening station, using a baghouse IS3208 as a control device and exhausting to stack IS6206.

(d) Three (3) Sinter Coolers, identified as ISC10385, ISC20386, and ISC30387, constructed in 1958, with a maximum capacity of 225 ton per hour each, with emissions exhausting to stacks IS6203, IS6204, and IS6205 respectively.

(e) Three (3) Sinter Strand Discharge End Areas, identified as ISS10379, ISS20380 and ISS0381, constructed in 1958, using three (3) baghouses as control devices, designated as IS3205, IS3206, and IS3207, exhausting to stacks IS6200, IS6201, and IS6202 respectively.

(f) Blended Material Storage Bin Building, identified as ISB00377, constructed in 1979, including bins, feeders and conveyors, with a maximum capacity of 1,000 tons per hour, using a baghouse IS3196 as a control device and exhausting to stack IS6197.

(g) Storage and Blending Piles, identified as ISBP0376, with fugitive emissions.

Blast Furnaces

(a) Raw materials shipped to the ore yard identified as IAOYO366, are transferred to the Highline, identified as IAHL0307, from which raw material shipments and coke are sent through the Stockhouse.

(b) The No. 14 Blast Furnace Stockhouse, constructed in 1979, modified in 2009 with the addition of a baghouse for particulate control, identified Blast Furnace No. 14 Stockhouse Baghouse, exhausting to stack IDSH0367, servicing Blast Furnace 14. The No 4 Blast Furnace Stockhouse constructed in 1979, controlled by dust suppression, services Blast Furnace No. 4.

(c) The No 6 Blast Furnace Stockhouse constructed in 1979, controlled by dust suppression, services Blast Furnace No. 6. The No. 8 Blast Furnace Stockhouse constructed in 1979, controlled by dust suppression, services Blast Furnace No. 8.

(d) No. 4 Blast Furnace, constructed in 1917, with a maximum capacity of 200 tons per hour, identified as IABF0308, using a Blast Furnace Gas Distribution System to collect the blast furnace gas and using natural gas injection and pulverized coal at a rate of 26 tons per hour, oil (from on-site contractor when it meets specifications) at a rate of 70 gallons per minute and/or coal tar (when the on-site contractor tar centrifuge is not operating) at a rate of 70 gallons per minute.

(1) Three (3) No. 4 Blast Furnace Stoves identified as IAST0360, replaced in 1947, with a maximum heat input capacity of 350 MMBtu per hour total combusting blast furnace gas (BFG) and natural gas, exhausting to the combustion stack IA6160.

(2) No. 4 Blast Furnace Casthouse, identified as IABF0308, constructed in 1917, with emissions from tapping and runners controlled by a natural gas iron oxide fume suppression system IA3177, exhausting to casthouse roof monitor IA6010.

(3) One (1) Slag Pit, identified as IASP0311, with fugitive emissions.

(e) No. 6 Blast Furnace, constructed in 1910, with a maximum capacity of 200 tons per hour, identified as IABFO341, using a Blast Furnace Gas Distribution System to collect the blast furnace gas and using natural gas injection and pulverized coal injected at a rate of 26 tons per hour, oil at a rate of 70 gallons per minute and /or coal tar at a rate of 70 gallons per minute.

(1) Four (4) No. 6 Blast Furnace Stoves identified as IBST0361, replaced in 1997, with a maximum heat input capacity of 350 MMBtu per hour total, combusting Blast Furnace Gas (BFG) and natural gas exhausting to the combustion stack IB6168.

(2) No. 6 Blast Furnace Casthouse, identified as IBBF0341, constructed in 1910, with emissions from tapping and runners controlled by a natural gas iron oxide fume suppression system IB3178, exhausting to casthouse roof monitor IB6011.

(3) One (1) Slag Pit, identified as IBSP0335, with fugitive emissions.

(f) No. 8 Blast Furnace, constructed in 1909, with a maximum capacity of 183 tons per hour, identified as ICBFO354, using a Blast Furnace Gas Distribution System to collect the blast furnace gas and using natural gas injection and pulverized coal injected at a rate of 26 ton per hour, oil at a rate of 70 gallons per minute and/or coal tar at a rate of 70 gallons per minute.

(1) Four (4) No. 8 Blast Furnace Stoves, identified as ICST0362, replaced in 1999, with a maximum heat input capacity of 325 MMBtu per hour total, combusting Blast Furnace Gas and natural gas, exhausting to the combustion stack IC6175.

(2) No. 8 Blast Furnace Casthouse, identified as ICBF0354, constructed in 1909, with emissions from tapping and runners controlled by a natural gas iron oxide fume suppression system IC3179, exhausting to cast house roof monitor IC6012.

(3) One (1) Slag Pit, identified as ICSP0363, with fugitive emissions.

(g) No. 14 Blast Furnace, constructed in 1974, with a maximum capacity of 450 tons per hour, identified as IDBF0369, using a Blast Furnace Gas Distribution System to collect the blast furnace gas and using natural gas injection and pulverized coal injected at a rate of 80 tons per hour, oil at a rate of 150 gallons per minute and/or coal tar at a rate of 150 gallons per minute.

(1) Three (3) No. 14 Blast Furnace Stoves identified as IDST0359, constructed in 1974, with a maximum heat input capacity of 700 MMBtu per hour total, combusting blast furnace gas and natural gas, exhausting to the combustion stack ID6184;

(2) No. 14 Blast Furnace Casthouse, identified as IDBF0369, constructed in 1974 with emissions controlled by a baghouse, identified as ID3185, exhausting to stack ID6187 and fugitive emissions exhausting through the casthouse roof monitor ID6013;

(3) One (1) Slag Pit, identified as IDSP0371, with fugitive emissions.

(4) Pursuant to Significant Source Modification 089-20118-00121, issued October 20, 2005, the following activities involved in the No. 14 Blast Furnace Reline Project were approved for construction:

(A) Replacement of furnace refractory lining with new and thinner refractory brick.

(B) Replacement of furnace shell.

(C) Removal and replacement of the top charging system with a new “bell-less” charging system.

(D) Placement of new copper staves in the mantle area of the furnace.

(E) Installation of copper cooling plates and a new bustle pipe.

(F) Repair of the checker work brick in the stoves and various structural, mechanical and electrical repairs.

(G) Enlargement of the slag granulator and addition of a stack.

(H) Changes to the casthouse and casthouse emissions control system to improve capture efficiency of hoods at the tap holes, iron troughs and runners.

(I) Removal and replacement of the existing system for cleaning blast furnace gas with a more efficient scrubbing system.

(h) One (1) No. 14 Blast Furnace Slag Granulation Plant owned by U.S. Steel - Gary Works and operated by U.S. Steel - Gary Works as part of the slag processing operation. The granulation plant has a maximum capacity of 1,704,000 tons of steel mill slag per year, consisting of the following:

(1) One (1) hot slag quenching operation, constructed in 1991, directed to a hooded exhaust stack.

(2) Two (2) silos, constructed in 1991, for temporary slag storage.

(3) Two (2) belt conveyers, constructed in January 1995.

(4) One (1) storage silo and loadout bay, constructed in May 1995, with a capacity of 400,000 tons per year.

(i) One (1) blast furnace gas distribution system consisting of instrumentation and valves designed to limit the maximum pressure through the distribution system by venting excess blast furnace gas to the three (3) bleeder stacks equipped with Flare No. 1 identified as BG6073, constructed before 1920, Flare No. 2, identified as BG6074 constructed before 1920 and Flare No. 4 identified as BG6075, constructed in 1974.

(j) One (1) iron beaching process, constructed prior to 1965, identified as IMIB0378.

(k) One (1) transfer ladle maintenance operation, constructed prior to 1965, identified as, IMVM0375.

Number One Basic Oxygen Process (BOP) Shop

(a) Two (2) Stations, identified as No. 1 and No. 2, Hot Metal Transfer and Desulfurization Stations. The Desulfurization Stations were originally constructed in 1981 and the Hot Metal Transfer Stations were originally constructed in 1965, and replaced in 1998. Each station consists of Hot Metal Desulfurization, SSDS0201, Hot Metal Transfer SSMT0203 and Slag Skimming SSSS0205. Hot metal from the blast furnaces is desulfurized and skimmed prior to charging in the steel making vessels. The maximum capacity of each station is 456 tons per hour. Each station is equipped with a local exhaust ventilation hood to capture emissions ducted to the Hot Metal Desulfurization/Skimming Stations Baghouse SS3100. The desulfurization units are equipped with nitrogen suppression around where the desulfurization lance penetrates the hood hole.

(b) One (1) Flux handling system, identified as SSFH0206, constructed in 1965, used for unloading, temporary storage, and transfer of fluxing agents to the steel making vessels, with a maximum capacity of 80 tons per hour. Emissions are controlled by No. 1, No. 2 and No. 3 baghouses SS3058, SS3059, and SS3053. Nos. 1 and 2 exhaust inside the building and No. 3 discharges through stack SS6056.

(c) Basic Oxygen Process (BOP) Vessels, constructed in 1965, consisting of BOP vessel M, identified as SSVM0234, vessel E, identified as SSVE0235 and vessel D, identified as SSVD0236, with a maximum capacity of 250 tons per hour each. Emissions are controlled by open combustion hoods and an exhaust emission hood collection system, which exhausts emissions to the Gas Cleaning Systems SS3103 and SS3104.

(d) Two (2) gas cleaning systems SS3103 and SS3104 that process the exhaust gases from the three (3) steel making vessels consisting of three (3) quenchers, two (2) scuppers, two (2) Venturi scrubbers, two (2) separators, two (2) gas coolers fitted with internal mist eliminators and two (2) induced draft fans. Emissions exhaust through stacks SS6102 and SS6103.

(e) CASbell/OB Lancing Stations M, D and E, include the controlled argon stirring process and blowing of oxygen to maintain temperature and chemistry. Constructed in 1981, Station M, identified as SSCM0231, Station E identified as SSCE0232, and Station D identified as SSCD0233 with a maximum capacity of 250 tons per hour each. Emissions are controlled by the CASbell/OB Lancing baghouse SS3105, exhausting through Stack SS6104 and uncaptured emissions venting to the roof monitor SS6636.

(f) One (1) Slingot Moulding Station, including the casting of bottom-poured steel ingots, identified as SSMS0227, constructed in 1965, exhausting to the roof monitor SS6637.

(g) Nine (9) natural gas fired Ladle Preheaters and Dryers identified as No. 1 through 9, with 1 through 4, constructed in 1983, 5 and 6 constructed in 1982 and 7 through 9 construction unknown. Six (6) Preheaters with a capacity of 14 MMBtu/hr each and three (3) Dryers with a capacity of 10 MMBtu/hr each, identified as SSLD0230, exhausting through Roof Monitor SS6637.

(h) One (1) Continuous Caster, identified as SCSC0274, constructed in 1967, including a Tundish dryer with a heating capacity of 7.0 MMBtu/hr per hour, continuously casting steel slabs with a maximum capacity of 275 tons per hour. Emissions exhaust through Roof Monitor SC6638.

(i) One (1) fugitive emissions mitigation system at the No. 1 BOP Shop, constructed in June 2002, consisting of a capture hood system ducted to a 99% efficient baghouse with a flow rate of 11,500 acfm.

(j) One emergency slag skimming station with a maximum capacity of 456 tons per hour with emissions ducted to the Hot Metal Transfer Station and Desulfurization/Skimming Stations Baghouse SS3100.

Number Two Q-BOP Shop

(a) Two (2) Hot Metal Transfer and Desulfurization Stations, identified as NSDS0246, constructed in 1987, with a maximum capacity of 510 tons per hour. These stations included: two (2) Hot Metal Mixers, identified as NSMM0264 and two (2) Hot Metal Mixer Heaters, identified as NSMH0251, constructed in 1973, with a maximum capacity of 255 tons per hour. The natural gas fired mixer heaters have a heat input capacity of 10 MMBtu/hr each. Emissions from the hot metal transfer and desulfurization stations, mixers and heaters are controlled by the Hot Metal Transfer and Desulfurization Stations Baghouse NS3115, discharging through NS6144 and the uncontrolled emissions go through roof monitor NS6631.

(b) Q-Basic Oxygen Process (BOP) vessels, constructed in 1973, consisting of BOP vessel T identified as NSVT0268, vessel W, identified as NSVW0269, and vessel Y, identified as NSVY0270, with a maximum capacity of 250 tons per hour each. Primary emissions are controlled by open combustion hood and two (2) Gas Cleaning Systems, secondary emissions are controlled by the Secondary Emissions Baghouse NS3124, exhausting to stack NS6123, and uncontrolled emissions exhaust through Roof Monitor NS6632.

(c) Two (2) Gas Cleaning Systems, identified as NS3125 and NS3126 located in the gas cleaner facility, constructed in 1973, process the exhaust gases from the three (3) steel making vessels through three (3) quenchers, two (2) scuppers (tank like structures that remove excess quench water and solids from the gas stream), two (2) Venturi scrubbers, two (2) separators, two (2) gas coolers with mist eliminators, and two (2) induced draft fans exhausting to Stacks NS6124 and NS6125.

(d) Three (3) Flux Bins T, W, and Y, identified as NSVT0265, NSVW0266 and NSVY0267, constructed in 1973, with a maximum capacity of 141 tons per hour each. Emissions are controlled by five (5) baghouses. Three (3) Flux Transfer Baghouses at 166' level identified as NS3112, NS3108, and NS3107, exhausting through Stacks NS6623, NS6627and NS6628 recycling captured material back to the process; One (1) North Flux Handling Baghouse at 116' level identified as NS3109 and one (1) South Flux Handling Baghouse at 116' level identified as NS3110, exhausting through stacks NS6626 and NS6625. Uncontrolled emissions exhaust through the roof monitor NS6632.

(e) Three (3) Ladle Metallurgical Facilities, LMF1 identified as NSL10293, LMF 2 identified as NSL20294 were constructed in 1986 and LMF 3 identified as NSL30295, constructed in 1991 with a maximum capacity of 348 tons per hour each. Hot fume emissions from LMF 1 and 2 are controlled by Nos. 1 and 2 LMF Hot Fume Exhaust baghouses NS3135 and NS3136, exhausting through stacks NS6146 and NS6147. Material handling emissions at LMF 1 and 2 are controlled by the LMF Nos. 1 and 2 Material Handling baghouse NS3052, exhausting through stack NS6055. The LMF 3 Hot Fume Exhaust and Material Handling emissions are controlled by the LMF 3 Hot Fume and Material Handling Baghouse NS3137, exhausting to stack NS6148. All uncontrolled emissions exhaust through the roof monitor NS6634.

(f) One (1) Capped Argon Bubbling (CAB) Station with oxygen blowing, approved in 2014 for construction, identified as NSC40296, with a maximum capacity of 477,000 tons per year, using the No. 3 LMF Hot Fume and Material Handling Baghouse NS3137 as control, and exhausting to stack NS6148. All uncontrolled emissions exhaust through the roof monitor NS6634.

(g) One (1) R-H Vacuum Degasser, identified as NSVD0271, constructed in 1989, with a maximum capacity of 297.1 tons of steel per hour consisting of two (2) natural gas fired heaters, one (1) active and one (1) spare, identified as NSAB0276 and NSSB0275, with heat input capacities of 12 MMBtu per hour and 3 MMBtu per hour, respectively. Carbon monoxide and other combustible gas emissions are controlled with a flare that exhausts through Stack NS6145 and uncontrolled emissions exhaust through the Roof Monitor NS6634.

(h) One (1) Slag Conditioning Station servicing the RH Vacuum Degasser, constructed in 1997, with a maximum capacity of 297.1 tons of steel per hour.

(1) PM_{10} emissions from the station are controlled by a baghouse exhausting through Stacks S-1 through S-6 and recycling captured material back to the process.

(2) PM_{10} emissions from the material handling of slag conditioning and metallurgical agents are exhausted through the RH Vacuum Degasser Slag Conditioning Baghouse NS3207, exhausting through Stack NS6636.

(i) One (1) Daytank Lime Silo at the lime dumping station, identified as NSDS0250 constructed in 1971. Emissions are controlled by the Daytank Lime Silo baghouse NS3106, exhausting through the stack, NS6629.

(j) Three (3) Continuous Casting Lines, identified as Lines A, B and C identified as, NCCA0284, NCCB0285 and NCCC0286, with a total maximum capacity of 800 tons per hour combined. Lines A and B were constructed in 1986. Line C was constructed in 1991. Emissions from the continuous casters go to the Roof Monitor NC6635.

(k) Fourteen (14) natural gas fired Ladle Preheaters, identified as NBLD0262, eleven (11) with a heat input capacity of 9 MMBtu per hour each and three (3) with a heat input of 10 MMBtu per hour each. Emissions go through Roof Monitor NS6633.

(l) Two (2) Hot Metal Ladle Skimmers, identified as NSLS0248, constructed in 1973. Emissions go through Roof Monitor NS6631.

(m) Two (2) Steel Slag Skimming Stations, consisting of slag skimmers, identified as NSS10292 and NSS20287. Both were constructed in 1973. Emissions go through Roof Monitor NS6633.

(n) One (1) Slingot Station, identified as NSST0290, constructed in 1986. Emissions go through Roof Monitor NS6634.

(p) Eight (8) natural gas fired Tundish Preheaters located at the No. 2 Caster, with a heat input capacity of 6 MMBtu per hour each. Emissions go through Roof Monitor NC6635.

Hot Rolling Mill

(a) Four (4) reheat furnaces Nos. 1, 2, 3 and 4, identified as RMF10500, RMF20501, RMF30502 and RMF40503 commenced operation in 1967, with heat input capacity of 600 MMBtu per hour each. Each furnace is equipped to combust natural gas and coke oven gas with emissions exhausting through Stacks RM6500, RM6501, RM6502 and RM6503.

(b) Two (2) waste heat boilers Nos. 1 and 2 , identified as RB1B0508 and RB2B0509, commenced operation in 1967, with a heat input capacity of 226 MMBtu per hour each. The heat input capacity from fuel from these boilers is derived from a combination of

waste heat ducted from the reheat furnaces and the combustion of natural gas and coke oven gas. Emissions exhaust through the waste heat boiler stacks HB6504 and HB6505.

(c) One (1) 84-inch Hot Strip Mill, identified as RMV00504, commenced operation in 1967, with a maximum capacity of 856 tons per hour, 5 roughing mills and a 7-stand finishing mill with fugitive emissions through a Roof Monitor RM6630.

Continuous Pickling Lines

(a) One (1) 84-inch Pickle Line, the North Continuous Pickle Line, identified as HWPO0625, constructed in 1968, with a maximum capacity of 314 tons per hour consisting of four (4) pickle tanks and two (2) rinse tanks (hot and cold). Emissions at this pickle line are controlled by a fume exhaust scrubber, HW3545 exhausting to stack HW6525.

(b) One (1) 80-inch Pickle Line, the South Continuous Pickle Line, identified as HMPO0589, constructed in 1948, with a maximum capacity of 91 tons per hour, consisting of three (3) pickle tanks and two (2) rinse tanks (hot and cold). Emissions are controlled by a fume exhaust scrubber, HM3540, exhausting to stack HM6520.

Sheet Products Division

(a) North Sheet Mill

(1) One (1) 5-Stand Cold Reduction Mill, identified as H5M50637, constructed in 1964, with a maximum capacity of 400 tons per hour, consisting of 5 Mill Stands. Emissions are controlled by fume collection H53547, exhausting to Stack H56527.

(2) Twenty-six (26) 4-Stack A Box Annealing Furnaces and 50 bases, identified as HTAF0813 through HTAF0838, constructed in 1964, with a heat input capacity of 12 MMBtu per hour each. These furnaces are direct fired with emissions exhausting through vent pipes HT6530 through HT6555.

(3) One (1) 80-inch temper mill, constructed in 1964, with a maximum capacity of 250 tons per hour, with fugitive emissions.

(4) One (1) 80-inch Recoil Line, constructed in 1964, with a maximum capacity 120 tons per hour, with fugitive emissions.

(b) South Sheet Mill

(1) Seventeen (17) 8-Stack A Box Annealing furnaces and 66 bases, identified as HXBA0560 through HXBA0576, constructed in 1948. Eleven (11) furnaces have a heat input capacity of 15 MMBtu per hour each and the remaining six (6) are rated at 18 MMBtu per hour each. Emissions from these furnaces exhaust through the Roof Monitor HX6003.

(2) One (1) 2-Stand Temper Mill, identified as H2M00579, constructed in 1974, with a maximum capacity of 89 tons per hour, with fugitive emissions through Roof Monitor H26004.

(3) One (1) No. 6 East Galvanizing Line, constructed in 1962, with a maximum capacity of 48 tons an hour, with one (1) annealing furnace identified as H6F10527 with a heat input of 45 MMBtu per hour and emissions through stack H66516. Also, contains one (1) Galvanneal Furnace identified as HF20529 with

a heat input capacity of 20.0 MMBtu per hour and emissions exhausting through Roof Monitor H66006.

(4) Two (2) hydrogen atmosphere batch annealing furnaces, with a total heat input capacity of 10.26 MMBtu per hour, constructed in 1997, consisting of three (3) fixed bases and two (2) movable cooling hoods.

(5) One (1) 84-inch Hot Roll Temper Mill, constructed in 1967, with a maximum capacity of 124 tons per hour, with fugitive emissions.

(6) One (1) coil prep line, constructed in 1968, with a maximum capacity of 73 tons per hour, with fugitive emissions.

(c) Electro-galvanizing Line (EGL)

(1) One (1) Electro-galvanizing Line (EGL), with one HCl pickle tank, No. 1 Pickle tank, identified as HET20685, a cleaner section, a plating section and associated scrubber, with a maximum capacity of 60.5 tons per hour. Fumes from the Pickle Section are controlled by a fume scrubber HE3583 exhausting through stack HE6563. The single sided process for this coating line was constructed in 1977 and was modified in 1993 to a double sided process for coating.

(2) One (1) natural gas fired Boiler No. 1 in the EGL Boiler House, identified as HBB10675, constructed in 1978 and modified in 2001, with a heat input capacity of 39.147 MMBtu per hour, exhausting through stack HB6559.

Tin Division

(a) One (1) 6-Stand Cold Reduction Mill, identified as TRM00709, constructed in 1967, with a maximum capacity of 150 tons per hour. Emissions are controlled by a mist eliminator TR3600, exhausting to stack TR6575.

(b) One (1) cleaning line, identified as No. 7 Cleaning Line, constructed in 1967, with a maximum capacity of 80 tons per hour. Fumes are controlled by a fume scrubber exhausting to a stack.

(c) Two (2) Annealing Lines, No. 1 and No. 2, each containing an annealing furnace, identified as T1AF0794 and T2AF0799, No. 1 constructed in 1950 and No. 2 constructed in 1959, with a maximum heat input capacities of 32 and 35 MMBtu per hour, respectively. Emissions exhaust to stacks T16609 and T26610. The No. 2 Continuous Anneal Line has a cleaning section with fumes collected in a fume scrubber exhausting through a stack.

(d) Five (5) 4-Stack A Box Annealing Furnaces and 12 bases, identified as TXAF0765 through TXAF0769, constructed in 1968. All furnaces have a heat input of 10.5 MMBtu per hour each. Emissions exhaust to stacks TX6580 through TX6584.

(e) One (1) 48-inch Temper Mill, constructed in 1958, with a maximum capacity of 150 tons per hour, with fugitive emissions. This unit has a dust filter that exhausts inside the building.

(f) One (1) Double Reduction Mill with two (2) mill stands, identified as TDMO0742, constructed in 1963, with a maximum capacity of 75 tons per hour. Emissions are controlled by a mist eliminator D3603, exhausting to stack TD6595.

(g) One (1) No. 1 Tin Free Steel Line (TFS), constructed in 1950, with a maximum capacity of 24 tons per hour. The chemical treatment rinse section, TFR00753 exhaust through stack TF6597 and all other fugitive emissions from the line to roof monitor TF6661.

(h) One (1) No. 5 Electrolytic Tinning Line 5 (ETL), constructed in 1957, and with a maximum capacity of 50 tons per hour. The No. 5 ETL contains a Plating and Chemical Treatment Tank, identified as TFR00777, with fugitive emissions through Roof Monitor T56071.

(i) One (1) No. 6 Electrolytic Tinning Line (6 ETL), constructed in 1966, with a maximum capacity of 120 tons per hour. The 6 ETL also contains a Plating and Chemical Treatment Tank, identified as T6H00786, with fugitive emissions through Roof Monitor T56071.

(j) One (1) Tin Anode Caster, constructed in 1965, with a maximum capacity of 0.57 tons per hour, with fugitive emissions through roof monitor.

(k) One (1) Tin Mill Recoil and inspection Line, constructed in 1967, with a maximum capacity of 14.8 tons per hour.

(l) One (1) 45” Side Trimmer, constructed in 1961, with fugitive emissions through the roof monitor.

No. 4 Boiler House

(a) Two (2) Boilers, No. 1 and No. 2, identified as O4B10459 and O4B20460, constructed in 1967, equipped to combust natural gas, blast furnace gas and fuel oil, with a maximum heat input of 500 MMBtu per hour each, exhausting through Stacks O46268 and O46269, respectively.

(b) One (1) Boiler, No. 3, identified as O4B30461, constructed in 1967, equipped to combust blast furnace gas and natural gas, with a maximum heat input of 500 MMBtu per hour, exhausting through Stack O46270.

Turboblower Boiler House (TBBH)

(a) Three (3) Boilers, No. 1, No. 2 and No. 3, identified as OTB10462, OTB20463 and OTB30464, constructed in 1948, equipped to combust blast furnace gas, coke oven gas, fuel oil and natural gas, with a maximum heat input of 410 MMBtu per hour each, exhausting through Stacks OT6271, OT6272 and OT6273, respectively.

(b) One (1) Boiler No. 5, identified as OTB50466, constructed in 1958, equipped to combust blast furnace gas, coke oven gas, fuel oil and natural gas, with a maximum heat input of 410 MMBtu per hour, exhausting through Stack OT6275.

(c) One (1) boiler, No. 6, identified as OTB60467, constructed after August 17, 1971, equipped to combust blast furnace gas and natural gas, with a maximum heat input capacity of 710 MMBtu per hour, exhausting through Stack OT6276.

Coal Pulverization and Air Preheater System

(a) One (1) coal pulverization equipment train, identified as SS-1 that consists of a pulverizer with a maximum capacity of 90 tons per hour; a preheater with a maximum heat input capacity of 37.3 MMBtu per hour, and a dual process separation cyclone, constructed in 1993, and exhausting to one baghouse with three modules (three stacks) 1A, 1B and 1C.

(b) One (1) coal pulverization equipment train, identified as SS-2 that consists of a pulverizer with a maximum capacity of 90 tons per hour; a preheater with a maximum heat input capacity of 37.3 MMBtu per hour, and a dual process separation cyclone, constructed in 1993, and exhausting to one baghouse with three modules (three stacks) 2A, 2B and 2C.

(c) One (1) coal pulverization equipment train, identified as SS-3 that consists of a pulverizer with a maximum capacity of 90 tons per hour; a preheater with a maximum heat input capacity of 37.3 MMBtu per hour, and a dual process separation cyclone, constructed in 1993, and exhausting to one baghouse with three modules (three stacks) 3A, 3B and 3C.

Pulverized Coal Storage and Feed System

(a) One (1) Pulverized coal Transport, identified as Line A, constructed in 1993, with a maximum capacity of 210 tons per hour, ducted to a baghouse (A) exhausting to stack (SS-5).

(b) One (1) Pulverized coal Transport, identified as Line B, constructed in 1993, with a maximum capacity of 210 tons per hour, ducted to a baghouse (B) exhausting to stack (SS-6).

(c) One (1) Pulverized coal storage reservoir, constructed in 1993, with a maximum capacity of 600 tons, blanketed with nitrogen and ducted to a baghouse (vent filter house) exhausting to stack (SS-7).

Railcar Heater

One (1) railcar heater system, constructed in 1993, with a maximum capacity of 14 MMBtu per hour, exhausting inside the building.

Coal Handling Operations

Coal Handling System

(a) One (1) Railcar Dumper, identified as RCD-1, constructed in 1993, with a maximum capacity of 600 tons per hour, ducted to a baghouse 8AB exhausting through one or two fans to stacks 8A and/or 8B.

(b) One (1) Reclaim Hopper, identified as RCH-1, constructed in 1993, with a maximum capacity of 300 tons per hour, ducted to baghouse DC-6 and exhausting to stack DC-6.

(c) One (1) Car Dump Hopper 1/C1, identified as FS-8, constructed in 1993, with a maximum capacity of 200 tons per hour, ducted to baghouse DC-1 exhausting to stack F1.

(d) One (1) Car dump Hopper 2/C1, identified as FS-9, constructed in 1993, with a maximum capacity of 200 tons per hour, ducted to a baghouse DC-2 exhausting to stack F2.

(e) One (1) Car Dump Hopper 3/C1, identified as FS-10, constructed in 1993, with a maximum capacity of 200 tons per hour, ducted to a baghouse DC-3 exhausting to stack F3.

(f) One (1) Transfer Point C1/C2, identified as FS-2, constructed in 1993, with a maximum capacity of 600 tons per hour, ducted to a baghouse DC-4 exhausting to stack F4.

(g) One (1) Reclaim Hopper/C2, identified as FS-14, constructed in 1993, with a maximum capacity of 300 tons per hour, ducted to a baghouse DC-5 exhausting to stack F5.

(h) One (1) Screen Transfer/C2, identified as FS-3, constructed in 1993, with a maximum capacity of 600 tons per hour, ducted to a baghouse DC-7 exhausting to stack F7.

(i) One (1) Screen/C3 Gate Transfer identified as FS-11, constructed in 1993, ducted to a baghouse DC-8 exhausting to stack F.

(j) One (1) Screen/C4 Gate Transfer, identified as FS-12, constructed in 1993, with a maximum capacity of 600 tons per hour, ducted to a baghouse DC-9 exhausting to stack F9.

(k) One (1) Transfer Point C4/C5, identified as FS-4, constructed in 1993, ducted to a baghouse DC-10 exhausting to stack F10.

East Building – Coal handling

(a) One (1) Transfer Point C5/C6, identified as FS-5, constructed in 1993, with a maximum capacity of 600 tons per hour, ducted to a baghouse DC-11 exhausting to stack F11.

(b) One (1) Transfer Point C6/Bin 1, identified as FS-7, constructed in 1993, ducted to baghouse DC-12 exhausting to stack F12.

(c) One (1) Transfer Point C5/Bin 2, identified as FS-6, constructed in 1993, ducted to baghouse DC-13 exhausting to stack F13.

(d) One (1) Transfer Point C6/Bin 3, identified as FS-13, constructed in 1993, with a maximum capacity of 600 tons per hour, ducted to baghouse DC-14 exhausting to stack F14.

Coal Piles and Haul Roads

(a) One (1) coal pile and handling operation, identified as F17, constructed in 1993, with a storage capacity of 100,000 tons and an area of 2 acres, having a maximum throughput of 200,000 tons per year.

(b) Haul Roads - Vehicle Traffic

Carbon Alloy Synthesis Plant (CASP) Module A

(a) Raw Material Receiving Handling and Silos A, identified as RMRHSA, approved for construction in 2010, consisting of the following:

(1) One (1) CDA1 wet coal feed hopper discharge, with a rated capacity of 50 tons per hour, one (1) vibratory feeder, with a rated capacity of 50 tons per hour, and associated drag conveyors, each with a rated capacity of 50 tons per hour, ducted to one (1) baghouse (OR-A-01-DC1105), exhausting to stack OR-A-01-ST1105.

(2) One (1) CDA2 wet coal feed hopper discharge, with a rated capacity of 50 tons per hour, one (1) vibratory feeder, with a rated capacity of 50 tons per hour, and associated drag conveyors, each with a rated capacity of 50 tons per hour, ducted to one (1) dust collector (OR-A-01-DC2105), exhausting to stack OR-A-01-ST2105.

(3) Five (5) dry coal storage silos, each with a storage capacity of 240 tons of dried coal, ducted to dedicated baghouses (OR-A-02-DC1070, OR-A-02-DC2070, OR-A-02-DC3070, OR-A-02-DC4070, and OR-A-02-DC5070, respectively),

exhausting to stacks OR-A-02-ST1070, OR-A-02-ST2070, OR-A-02-ST3070, OR-A-02-ST4070, and OR-A-02-ST5070, respectively.

(4) Five (5) blend #1 weigh feeders, each with a rated capacity of 40 tons per hour, and one (1) drag conveyor, with a rated capacity of 60 tons per hour, ducted to one (1) baghouse (OR-A-03-DC1105), exhausting to stack OR-A-03-ST1105.

(5) Four (4) blend #1 feed hoppers, with a rated capacity of 30 tons per hour, and two (2) blend #1 hopper feed drag conveyors, each with a rated capacity of 60 tons per hour, ducted to one (1) baghouse (OR-A-04-DC1105), exhausting to stack OR-A-04-ST1105.

Under 40 CFR 60, Subpart Y, the RMRHSA facilities are considered coal processing and conveying equipment.

(b) One (1) coal dryer and associated dried coal conveyors, collectively identified as CDA1, approved for construction in 2010, with a maximum capacity of 50 tons per hour, utilizing heated air from the FER A1 and FER A2 air to air heat exchangers to dry the coal, ducted to three (3) cyclones in parallel (collectively identified as OR-A-01-CY-1305) and one (1) dust collector (OR-A-01-DC1205), in series, exhausting to the coal dryer for heat recovery, with excess heat exhausting to stack OR-A-01-ST1215. Under 40 CFR 60, Subpart Y, the dryer is considered a thermal dryer and the associated conveyors are considered coal conveying equipment.

Note: It is not necessary for the baghouse exhaust to be recycled and the system can be operated as a once-through air stream.

(c) One (1) coal crusher and associated crushed coal conveyors, collectively identified as CCA1, approved for construction in 2010, with a maximum capacity of 100 tons per hour, ducted to one (1) dust collector (OR-A-02-DC1105), exhausting to stack OR-A-02-ST1105. Under 40 CFR 60, Subpart Y, this is considered coal processing and conveying equipment.

(d) One (1) coal dryer and associated dried coal conveyors, collectively identified as CDA2, approved for construction in 2010, with a maximum capacity of 50 tons per hour, utilizing heated air from the FER A3 and FER A4 air to air heat exchangers to dry the coal, ducted to three (3) cyclones in parallel (collectively identified as OR-A-01-CY-2305) and one (1) dust collector (OR-A-01-DC2205), in series, exhausting to the coal dryer for heat recovery, with excess heat exhausting to stack OR-A-01-ST2215. Under 40 CFR 60, Subpart Y, the dryer is considered a thermal dryer and the associated conveyors are considered coal conveying equipment.

Note: It is not necessary for the baghouse exhaust to be recycled and the system can be operated as a once-through air stream.

(e) One (1) coal crusher and associated crushed coal conveyors, collectively identified as CCA2, approved for construction in 2010, with a maximum capacity of 50 tons per hour, ducted to one (1) dust collector (OR-A-02-DC2105), exhausting to stack OR-A-02-ST2105. Under 40 CFR 60, Subpart Y, this is considered coal processing and conveying equipment.

(f) One (1) Feed Enhancement Reactor (FER) rotary kiln, identified as FERA1, approved for construction in 2010, with a maximum capacity of seven (7) tons of coal per hour, equipped with natural gas-fired low-NOx burners with a combined maximum heat input capacity of four (4) MMBtu/hr, and one (1) integral afterburner, identified as FERAB A1, equipped with natural gas-fired burners with a combined maximum heat input capacity of

ten (10) MMBtu/hr, exhausting through a heat exchanger to one (1) spray scrubber (OR-A-09-SR1015), one (1) cyclone (OR-A-09-CY-1025), and one (1) baghouse (OR-A-09-DC1030), in series, exhausting to stack OR-A-09-ST1045.

(g) One (1) Feed Enhancement Reactor (FER) rotary kiln, identified as FERA2, approved for construction in 2010, with a maximum capacity of seven (7) tons of coal per hour, equipped with natural gas-fired low-NOx burners with a combined maximum heat input capacity of four (4) MMBtu/hr, and one (1) integral afterburner, identified as FERAB A2, equipped with natural gas-fired burners with a combined maximum heat input capacity of ten (10) MMBtu/hr, exhausting through a heat exchanger to one (1) spray scrubber (OR-A-09-SR2015), one (1) cyclone (OR-A-09-CY-2025), and one (1) baghouse (OR-A-09-DC2030), in series, exhausting to stack OR-A-09-ST2045.

(h) One (1) Feed Enhancement Reactor (FER) rotary kiln, identified as FERA3, approved for construction in 2010, with a maximum capacity of seven (7) tons of coal per hour, equipped with natural gas-fired low-NOx burners with a combined maximum heat input capacity of four (4) MMBtu/hr, and one (1) integral afterburner, identified as FERAB A3, equipped with natural gas-fired burners with a combined maximum heat input capacity of ten (10) MMBtu/hr, exhausting through a heat exchanger to one (1) spray scrubber (OR-A-09-SR3015), one (1) cyclone (OR-A-09-CY-3025), and one (1) baghouse (OR-A-09-DC3030), in series, exhausting to stack OR-A-09-ST3045.

(i) One (1) Feed Enhancement Reactor (FER) rotary kiln, identified as FERA4, approved for construction in 2010, with a maximum capacity of seven (7) tons of coal per hour, equipped with natural gas-fired low-NOx burners with a combined maximum heat input capacity of four (4) MMBtu/hr, and one (1) integral afterburner, identified as FERAB A4, equipped with natural gas-fired burners with a combined maximum heat input capacity of ten (10) MMBtu/hr, exhausting through a heat exchanger to one (1) spray scrubber (OR-A-09-SR4015), one (1) cyclone (OR-A-09-CY-4025), and one (1) baghouse (OR-A-09-DC4030), in series, exhausting to stack OR-A-09-ST4045.

(j) Four (4) coal tar reclaimer systems, identified as RCLM A1 - RCLM A4, approved for construction in 2010, each with a maximum capacity of 2,000 pounds of coal tar recovered per hour, one system dedicated to each of FER A1 - FER A4, consisting of the following:

(1) Four (4) reformers, one (1) per FER, operating at a temperature range of 500 ^{0}F - 800 ^{0}F, for the recovery and distillation of coal tar, with non-recovered vapors exhausting to FERAB A1 - FERAB A4, respectively.

(2) Four (4) coal tar surge tanks, one (1) per FER.

(k) One (1) Carborec Storage and Blending Area A, identified as CBSBA, approved for construction in 2010, consisting of the following:

(1) Carborec crusher feed drag conveyors, each with a rated capacity of 60 tons per hour, ducted to a baghouse (OR-A-05-DC1205), exhausting to stack OR-A-05-ST1205.

(2) Six (6) weigh feeders, each with a rated capacity of 40 tons per hour, and blend #2 drag conveyors, each with a rated capacity of 75 tons per hour, ducted to a baghouse (OR-A-05-DC1405), exhausting to stack OR-A-05-ST1405.

(3) One (1) Carborec storage silo, with a storage capacity of 240 tons, ducted to a baghouse (OR-A-05-DC6070), exhausting to stack OR-A-05-ST6070.

(4) One (1) blend #2 surge bin, with a storage capacity of 440 tons, ducted to a baghouse (OR-A-06-DC1405), exhausting to stack OR-A-06-ST1405.

(5) Three (3) blend #2 weigh feeders, three (3) blend #2 drag conveyors, three (3) blend #2 crushers, three (3) hi-intensive mixers, three (3) pug mills, and three (3) densifers, each with a rated capacity of 30 tons per hour, billet belt conveyors and one (1) billet roller screener, each with a rated capacity of 80 tons per hour, and one (1) billet fines weigh feeder, with a rated capacity of 10 tons per hour, ducted to a baghouse (OR-A-06-DC1205), exhausting to stack OR-A-06-ST1205.

Under 40 CFR 60, Subpart Y, these facilities are considered coal processing and conveying equipment, or coal storage systems.

(l) One (1) billet transfer area, approved for construction in 2010, with emissions uncontrolled, consisting of the following:

(1) One (1) billet fines hopper, identified as OR-A-06-HP1125, with a maximum rated capacity of 10 tons per hour.

(2) Three (3) billet fines open belt conveyors, identified as OR-A-06-CB1130, OR-A-06-CB1140, and OR-A-06-CB1145, each with a maximum rated capacity of 10 tons per hour.

(3) One (1) billet belt conveyor, identified as OR-A-06-CB1110, with a maximum rated capacity of 60 tons per hour.

(4) One (1) billet hopper, identified as OR-A-06-HP1115, with a maximum storage capacity of 3 tons.

(5) Four (4) billet belt conveyors, identified as OR-A-06-CB1120, OR-A-06-CB2120, OR-A-06-CB1126, and OR-A-06-CB2126, each with a maximum rated capacity of 60 tons per hour.

(6) Two (2) billet vibratory feeders, identified as OR-A-06-VF1125 and OR-A-06-VF2125, each with a rated maximum capacity of 30 tons per hour.

(7) Two (2) trolley car loading stations, collectively identified as OR-A-06-LD1128, each with maximum capacity of 30 tons per hour.

(8) One (1) billet hopper, identified as OR-A-06-HP1135, and five (5) belt conveyors, identified as OR-A-06-CB1150, OR-A-06-CB1160, OR-A-06-CB1170, OR-A-06-CB1180, and OR-A-06-CB1190, each with a rated capacity of 30 tons per hour.

(m) One (1) Particle Fusion Reactor (PFR) tunnel kiln, identified as PFRA1, approved for construction in 2010, with a maximum production capacity of 20 tons per hour of Cokonyx, equipped with natural gas-fired low-NOx burners with a combined maximum heat input capacity of fifty (50) MMBtu/hr, with off gases ducted to one (1) afterburner, identified as PFRAB A1, equipped with natural gas-fired burners with a combined maximum heat input capacity of ten (10) MMBtu/hr, exhausting through a clean energy recovery process (CERP) to one (1) spray scrubber (OR-A-10-SR1010), two (2) cyclones in parallel (collectively identified as OR-A-10-CY-1115), and one (1) baghouse (OR-A-10-DC1020), in series, exhausting to stack OR-A-10-ST1025. Under 40 CFR 60, Subpart Dc, this is considered an affected steam generating unit.

(n) One (1) Particle Fusion Reactor (PFR) tunnel kiln, identified as PFRA2, approved for construction in 2010, with a maximum production capacity of 20 tons per hour of

Cokonyx, equipped with natural gas-fired low-NOx burners with a combined maximum heat input capacity of fifty (50) MMBtu/hr, with off gases ducted to one (1) afterburner, identified as PFRAB A2, equipped with natural gas-fired burners with a combined maximum heat input capacity of ten (10) MMBtu/hr, exhausting through a clean energy recovery process (CERP) to one (1) spray scrubber (OR-A-10-SR2010), two (2) cyclones in parallel (collectively identified as OR-A-10-CY-2115), and one (1) baghouse (OR-A-10-DC2020), in series, exhausting to stack OR-A-10-ST2025. Under 40 CFR 60, Subpart Dc, this is considered an affected steam generating unit.

(o) One (1) Finish Product Handling and Loading process, approved for construction in 2010, with emissions uncontrolled, consisting of the following equipment:

(1) Four (4) Cokonyx belt conveyors, identified as OR-A-08-CB1020, OR-A-08-CB1030, OR-A-08-CB2020, and OR-A-08-CB2030, each with a maximum rated capacity of 20 tons per hour.

(2) One (1) Cokonyx belt conveyor, identified as OR-A-08-CD1035, with a maximum rated capacity of 40 tons per hour.

(p) One (1) lime storage silo, identified as LSA, approved for construction in 2010, with a storage capacity of 50 tons of lime, equipped with one (1) dust collector (OR-A-12-DC1006), exhausting to stack OR-A-12-ST1006.

(q) Two (2) diesel-fired emergency generators, identified as EGA1 and EGA2, approved for construction in 2010, each with a maximum rated output of 1650 kW. Under 40 CFR 60, Subpart IIII, these are each considered an emergency stationary CI ICE. Under 40 CFR 63, Subpart ZZZZ, these are each considered a new emergency stationary RICE.

(r) One (1) natural gas-fired emergency generator, identified as EGA3, approved for construction in 2010, with a maximum rated output of 450 kW. Under 40 CFR 60, Subpart IIII, this is considered an emergency stationary CI ICE. Under 40 CFR 63, Subpart ZZZZ, this is considered a new emergency stationary RICE.

Carbon Alloy Synthesis Plant (CASP) Module B

(a) Raw Material Receiving Handling and Silos B, identified as RMRHSB, approved for construction in 2010, consisting of the following:

(1) One (1) CDB1 wet coal feed hopper discharge, with a rated capacity of 50 tons per hour, one (1) vibratory feeder, with a rated capacity of 50 tons per hour, and associated drag conveyors, each with a rated capacity of 50 tons per hour, ducted to one (1) baghouse (OR-B-01-DC1105), exhausting to stack OR-B-01-ST1105.

(2) One (1) CDB2 wet coal feed hopper discharge, with a rated capacity of 50 tons per hour, one (1) vibratory feeder, with a rated capacity of 50 tons per hour, and associated drag conveyors, each with a rated capacity of 50 tons per hour, ducted to one (1) dust collector (OR-B-01-DC2105), exhausting to stack OR-B-01-ST2105.

(3) Five (5) dry coal storage silos, each with a storage capacity of 240 tons of dried coal, ducted to dedicated baghouses (OR-B-02-DC1070, OR-B-02-DC2070, OR-B-02-DC3070, OR-B-02-DC4070, and OR-B-02-DC5070, respectively), exhausting to stacks OR-B-02-ST1070, OR-B-02-ST2070, OR-B-02-ST3070, OR-B-02-ST4070, and OR-B-02-ST5070, respectively.

(4) Five (5) blend #1 weigh feeders, each with a rated capacity of 40 tons per hour, and one (1) drag conveyor, with a rated capacity of 60 tons per hour, ducted to one (1) baghouse (OR-B-03-DC1105), exhausting to stack OR-B-03-ST1105.

(5) Four (4) blend #1 feed hoppers, with a rated capacity of 30 tons per hour, and two (2) blend #1 hopper feed drag conveyors, each with a rated capacity of 60 tons per hour, ducted to one (1) baghouse (OR-B-04-DC1105), exhausting to stack OR-B-04-ST1105.

Under 40 CFR 60, Subpart Y, the RMRHSB facilities are considered coal processing and conveying equipment.

(b) One (1) coal dryer and associated dried coal conveyors, collectively identified as CDB1, approved for construction in 2010, with a maximum capacity of 50 tons per hour, utilizing heated air from the FER B1 and FER B2 air to air heat exchangers to dry the coal, ducted to three (3) cyclones in parallel (collectively identified as OR-B-01-CY-1305) and one (1) dust collector (OR-B-01-DC1205), in series, exhausting to the coal dryer for heat recovery, with excess heat exhausting to stack OR-B-01-ST1215. Under 40 CFR 60, Subpart Y, the dryer is considered a thermal dryer and the associated conveyors are considered coal conveying equipment.

Note: It is not necessary for the baghouse exhaust to be recycled and the system can be operated as a once-through air stream.

(c) One (1) coal crusher and associated crushed coal conveyors, collectively identified as CCB1, approved for construction in 2010, with a maximum capacity of 100 tons per hour, ducted to one (1) dust collector (OR-B-02-DC1105), exhausting to stack OR-B-02-ST1105. Under 40 CFR 60, Subpart Y, this is considered coal processing and conveying equipment.

(d) One (1) coal dryer and associated dried coal conveyors, collectively identified as CDB2, approved for construction in 2010, with a maximum capacity of 50 tons per hour, utilizing heated air from the FER B3 and FER B4 air to air heat exchangers to dry the coal, ducted to three (3) cyclones in parallel (collectively identified as OR-B-01-CY-2305) and one (1) dust collector (OR-B-01-DC2205), in series, exhausting to the coal dryer for heat recovery, with excess heat exhausting to stack OR-B-01-ST2215. Under 40 CFR 60, Subpart Y, the dryer is considered a thermal dryer and the associated conveyors are considered coal conveying equipment.

Note: It is not necessary for the baghouse exhaust to be recycled and the system can be operated as a once-through air stream.

(e) One (1) coal crusher and associated crushed coal conveyors, collectively identified as CCB2, approved for construction in 2010, with a maximum capacity of 50 tons per hour, ducted to one (1) dust collector (OR-B-02-DC2105), exhausting to stack OR-B-02-ST2105. Under 40 CFR 60, Subpart Y, this is considered coal processing and conveying equipment.

(f) One (1) Feed Enhancement Reactor (FER) rotary kiln, identified as FERB1, approved for construction in 2010, with a maximum capacity of seven (7) tons of coal per hour, equipped with natural gas-fired low-NOx burners with a combined maximum heat input capacity of four (4) MMBtu/hr, and one (1) integral afterburner, identified as FERAB B1, equipped with natural gas-fired burners with a combined maximum heat input capacity of ten (10) MMBtu/hr, exhausting through a heat exchanger to one (1) spray scrubber (OR-B-09-SR1015), one (1) cyclone (ORB-09-CY-1025), and one (1) baghouse (OR-B-09-DC1030), in series, exhausting to stack OR-B-09-ST1045.

(g) One (1) Feed Enhancement Reactor (FER) rotary kiln, identified as FERB2, approved for construction in 2010, with a maximum capacity of seven (7) tons of coal per hour, equipped with natural gas-fired low-NOx burners with a combined maximum heat input capacity of four (4) MMBtu/hr, and one (1) integral afterburner, identified as FERAB B2, equipped with natural gas-fired burners with a combined maximum heat input capacity of ten (10) MMBtu/hr, exhausting through a heat exchanger to one (1) spray scrubber (OR-B-09-SR2015), one (1) cyclone (OR-B09-CY-2025), and one (1) baghouse (OR-B-09-DC2030), in series, exhausting to stack OR-B-09-ST2045.

(h) One (1) Feed Enhancement Reactor (FER) rotary kiln, identified as FERB3, approved for construction in 2010, with a maximum capacity of seven (7) tons of coal per hour, equipped with natural gas-fired low-NOx burners with a combined maximum heat input capacity of four (4) MMBtu/hr, and one (1) integral afterburner, identified as FERAB B3, equipped with natural gas-fired burners with a combined maximum heat input capacity of ten (10) MMBtu/hr, exhausting through a heat exchanger to one (1) spray scrubber (OR-B-09-SR3015), one (1) cyclone (OR-B-09-CY-3025), and one (1) baghouse (OR-B-09-DC3030), in series, exhausting to stack OR-B-09-ST3045.

(i) One (1) Feed Enhancement Reactor (FER) rotary kiln, identified as FERB4, approved for construction in 2010, with a maximum capacity of seven (7) tons of coal per hour, equipped with natural gas-fired low-NOx burners with a combined maximum heat input capacity of four (4) MMBtu/hr, and one (1) integral afterburner, identified as FERAB B4, equipped with natural gas-fired burners with a combined maximum heat input capacity of ten (10) MMBtu/hr, exhausting through a heat exchanger to one (1) spray scrubber (OR-B-09-SR4015), one (1) cyclone (OR-B-09-CY-4025), and one (1) baghouse (OR-B-09-DC4030), in series, exhausting to stack OR-B-09-ST4045.

(j) Four (4) coal tar reclaimer systems, identified as RCLM B1 - RCLM B4, approved for construction in 2010, each with a maximum capacity of 2,000 pounds of coal tar recovered per hour, one system dedicated to each of FER B1 - FER B4, consisting of the following:

(1) Four (4) reformers, one (1) per FER, operating at a temperature range of 500 ^{0}F - 800 ^{0}F, for the recovery and distillation of coal tar, with non-recovered vapors exhausting to FERAB B1 - FERAB B4, respectively.

(2) Four (4) coal tar surge tanks, one (1) per FER.

(k) One (1) Carborec Storage and Blending Area B, identified as CBSBB, approved for construction in 2010, consisting of the following:

(1) Carborec crusher feed drag conveyors, each with a rated capacity of 60 tons per hour, ducted to a baghouse (OR-B-05-DC1205), exhausting to stack OR-B-05-ST1205.

(2) Six (6) weigh feeders, each with a rated capacity of 40 tons per hour, and blend #2 drag conveyors, each with a rated capacity of 75 tons per hour, ducted to a baghouse (OR-B-05-DC1405), exhausting to stack OR-B-05-ST1405.

(3) One (1) Carborec storage silo, with a storage capacity of 240 tons, ducted to a baghouse (OR-B-05-DC6070), exhausting to stack OR-B-05-ST6070.

(4) One (1) blend #2 surge bin, with a storage capacity of 440 tons, ducted to a baghouse (OR-B-06-DC1405), exhausting to stack OR-B-06-ST1405.

(5) Three (3) blend #2 weigh feeders, three (3) blend #2 drag conveyors, three (3) blend #2 crushers, three (3) hi-intensive mixers, three (3) pug mills, and three (3) densifers, each with a rated capacity of 30 tons per hour, billet belt conveyors and one (1) billet roller screener, each with a rated capacity of 80 tons per hour, and one (1) billet fines weigh feeder, with a rated capacity of 10 tons per hour, ducted to a baghouse (OR-B-06-DC1205), exhausting to stack OR-B-06-ST1205.

Under 40 CFR 60, Subpart Y, these facilities are considered coal processing and conveying equipment, or coal storage systems.

(l) One (1) billet transfer area, approved for construction in 2010, with emissions uncontrolled, consisting of the following:

(1) One (1) billet fines hopper, identified as OR-B-06-HP1125, with a maximum rated capacity of 10 tons per hour.

(2) Three (3) billet fines open belt conveyors, identified as OR-B-06-CB1130, OR-B-06-CB1140, and OR-B-06-CB1145, each with a maximum rated capacity of 10 tons per hour.

(3) One (1) billet belt conveyor, identified as OR-B-06-CB1110, with a maximum rated capacity of 60 tons per hour.

(4) One (1) billet hopper, identified as OR-B-06-HP1115, with a maximum storage capacity of 3 tons.

(5) Four (4) billet belt conveyors, identified as OR-B-06-CB1120, OR-B-06-CB2120, OR-B-06-CB1126, and OR-B-06-CB2126, each with a maximum rated capacity of 60 tons per hour.

(6) Two (2) billet vibratory feeders, identified as OR-B-06-VF1125 and OR-B-06-VF2125, each with a rated maximum capacity of 30 tons per hour.

(7) Two (2) trolley car loading stations, collectively identified as OR-B-06-LD1128, each with maximum capacity of 30 tons per hour.

(8) One (1) billet hopper, identified as OR-B-06-HP1135, and five (5) belt conveyors, identified as OR-B-06-CB1150, OR-B-06-CB1160, OR-B-06-CB1170, OR-B-06-CB1180, and OR-B-06-CB1190, each with a rated capacity of 30 tons per hour.

(m) One (1) Particle Fusion Reactor (PFR) tunnel kiln, identified as PFRB1, approved for construction in 2010, with a maximum production capacity of 20 tons per hour of Cokonyx, equipped with natural gas-fired low-NOx burners with a combined maximum heat input capacity of fifty (50) MMBtu/hr, with off gases ducted to one (1) afterburner, identified as PFRAB B1, equipped with natural gas-fired burners with a combined maximum heat input capacity of ten (10) MMBtu/hr, exhausting through a clean energy recovery process (CERP) to one (1) spray scrubber (OR-B-10-SR1010), two (2) cyclones in parallel (collectively identified as OR-B-10-CY-1115), and one (1) baghouse (OR-B-10-DC1020), in series, exhausting to stack OR-B-10-ST1025. Under 40 CFR 60, Subpart Dc, this is considered an affected steam generating unit.

(n) One (1) Particle Fusion Reactor (PFR) tunnel kiln, identified as PFRB2, approved for construction in 2010, with a maximum production capacity of 20 tons per hour of Cokonyx, equipped with natural gas-fired low-NOx burners with a combined maximum heat input capacity of fifty (50) MMBtu/hr, with off gases ducted to one (1) afterburner, identified as PFRAB B2, equipped with natural gas-fired burners with a combined

maximum heat input capacity of ten (10) MMBtu/hr, exhausting through a clean energy recovery process (CERP) to one (1) spray scrubber (OR-B-10-SR2010), two (2) cyclones in parallel (collectively identified as OR-B-10-CY-2115), and one (1) baghouse (OR-B-10-DC2020), in series, exhausting to stack OR-B-10-ST2025. Under 40 CFR 60, Subpart Dc, this is considered an affected steam generating unit.

(o) One (1) Finish Product Handling and Loading process, approved for construction in 2010, with emissions uncontrolled, consisting of the following equipment:

(1) Four (4) Cokonyx belt conveyors, identified as OR-B-08-CB1020, OR-B-08-CB1030, OR-B-08-CB2020, and OR-B-08-CB2030, each with a maximum rated capacity of 20 tons per hour.

(2) One (1) Cokonyx belt conveyor, identified as OR-B-08-CD1035, with a maximum rated capacity of 40 tons per hour.

(p) One (1) lime storage silo, identified as LSB, approved for construction in 2010, with a storage capacity of 50 tons of lime, equipped with one (1) dust collector (OR-B-12-DC1006), exhausting to stack OR-B-12-ST1006.

(q) Two (2) diesel-fired emergency generators, identified as EGB1 and EGB2, approved for construction in 2010, each with a maximum rated output of 1650 kW. Under 40 CFR 60, Subpart IIII, these are each considered an emergency stationary CI ICE. Under 40 CFR 63, Subpart ZZZZ, these are each considered a new emergency stationary RICE.

(r) One (1) natural gas-fired emergency generator, identified as EGB3, approved for construction in 2010, with a maximum rated output of 450 kW. Under 40 CFR 60, Subpart IIII, this is considered an emergency stationary CI ICE. Under 40 CFR 63, Subpart ZZZZ, this is considered a new emergency stationary RICE.

Carbon Alloy Synthesis Plant (CASP) Module C

(a) Raw Material Receiving Handling and Silos C, identified as RMRHSC, approved for construction in 2010, consisting of the following:

(1) One (1) CDC1 wet coal feed hopper discharge, with a rated capacity of 50 tons per hour, one (1) vibratory feeder, with a rated capacity of 50 tons per hour, and associated drag conveyors, each with a rated capacity of 50 tons per hour, ducted to one (1) baghouse (OR-C-01-DC1105), exhausting to stack OR-C-01-ST1105.

(2) One (1) CDC2 wet coal feed hopper discharge, with a rated capacity of 50 tons per hour, one (1) vibratory feeder, with a rated capacity of 50 tons per hour, and associated drag conveyors, each with a rated capacity of 50 tons per hour, ducted to one (1) dust collector (OR-C-01-DC2105), exhausting to stack OR-C-01-ST2105.

(3) Five (5) dry coal storage silos, each with a storage capacity of 240 tons of dried coal, ducted to dedicated baghouses (OR-C-02-DC1070, OR-C-02-DC2070, OR-C-02-DC3070, OR-C-02-DC4070, and OR-C-02-DC5070, respectively), exhausting to stacks OR-C-02-ST1070, OR-C-02-ST2070, OR-C-02-ST3070, OR-C-02-ST4070, and OR-C-02-ST5070, respectively.

(4) Five (5) blend #1 weigh feeders, each with a rated capacity of 40 tons per hour, and one (1) drag conveyor, with a rated capacity of 60 tons per hour, ducted to one (1) baghouse (OR-C-03-DC1105), exhausting to stack OR-C-03-ST1105.

(5) Four (4) blend #1 feed hoppers, with a rated capacity of 30 tons per hour, and two (2) blend #1 hopper feed drag conveyors, each with a rated capacity of 60 tons per hour, ducted to one (1) baghouse (OR-C-04-DC1105), exhausting to stack OR-C-04-ST1105.

Under 40 CFR 60, Subpart Y, the RMRHSC facilities are considered coal processing and conveying equipment.

(b) One (1) coal dryer and associated dried coal conveyors, collectively identified as CDC1, approved for construction in 2010, with a maximum capacity of 50 tons per hour, utilizing heated air from the FER C1 and FER C2 air to air heat exchangers to dry the coal, ducted to three (3) cyclones in parallel (collectively identified as OR-C-01-CY-1305) and one (1) dust collector (OR-C-01-DC1205), in series, exhausting to the coal dryer for heat recovery, with excess heat exhausting to stack OR-C-01-ST1215. Under 40 CFR 60, Subpart Y, the dryer is considered a thermal dryer and the associated conveyors are considered coal conveying equipment.

Note: It is not necessary for the baghouse exhaust to be recycled and the system can be operated as a once-through air stream.

(c) One (1) coal crusher and associated crushed coal conveyors, collectively identified as CCC1, approved for construction in 2010, with a maximum capacity of 100 tons per hour, ducted to one (1) dust collector (OR-C-02-DC1105), exhausting to stack OR-C-02-ST1105. Under 40 CFR 60, Subpart Y, this is considered coal processing and conveying equipment.

(d) One (1) coal dryer and associated dried coal conveyors, collectively identified as CDC2, approved for construction in 2010, with a maximum capacity of 50 tons per hour, utilizing heated air from the FER C3 and FER C4 air to air heat exchangers to dry the coal, ducted to three (3) cyclones in parallel (collectively identified as OR-C-01-CY-2305) and one (1) dust collector (OR-C-01-DC2205), in series, exhausting to the coal dryer for heat recovery, with excess heat exhausting to stack OR-C-01-ST2215. Under 40 CFR 60, Subpart Y, the dryer is considered a thermal dryer and the associated conveyors are considered coal conveying equipment.

Note: It is not necessary for the baghouse exhaust to be recycled and the system can be operated as a once-through air stream.

(e) One (1) coal crusher and associated crushed coal conveyors, collectively identified as CCC2, approved for construction in 2010, with a maximum capacity of 50 tons per hour, ducted to one (1) dust collector (OR-C-02-DC2105), exhausting to stack OR-C-02-ST2105. Under 40 CFR 60, Subpart Y, this is considered coal processing and conveying equipment.

(f) One (1) Feed Enhancement Reactor (FER) rotary kiln, identified as FERC1, approved for construction in 2010, with a maximum capacity of seven (7) tons of coal per hour, equipped with natural gas-fired low-NOx burners with a combined maximum heat input capacity of four (4) MMBtu/hr, and one (1) integral afterburner, identified as FERAB C1, equipped with natural gas-fired burners with a combined maximum heat input capacity of ten (10) MMBtu/hr, exhausting through a heat exchanger to one (1) spray scrubber (OR-C-09-SR1015), one (1) cyclone (OR-C-09-CY-1025), and one (1) baghouse (OR-C-09-DC1030), in series, exhausting to stack OR-C-09-ST1045.

(g) One (1) Feed Enhancement Reactor (FER) rotary kiln, identified as FERC2, approved for construction in 2010, with a maximum capacity of seven (7) tons of coal per hour,

equipped with natural gas-fired low-NOx burners with a combined maximum heat input capacity of four (4) MMBtu/hr, and one (1) integral afterburner, identified as FERAB C2, equipped with natural gas-fired burners with a combined maximum heat input capacity of ten (10) MMBtu/hr, exhausting through a heat exchanger to one (1) spray scrubber (OR-C-09-SR2015), one (1) cyclone (OR-C-09-CY-2025), and one (1) baghouse (OR-C-09-DC2030), in series, exhausting to stack OR-C-09-ST2045.

(h) One (1) Feed Enhancement Reactor (FER) rotary kiln, identified as FERC3, approved for construction in 2010, with a maximum capacity of seven (7) tons of coal per hour, equipped with natural gas-fired low-NOx burners with a combined maximum heat input capacity of four (4) MMBtu/hr, and one (1) integral afterburner, identified as FERAB C3, equipped with natural gas-fired burners with a combined maximum heat input capacity of ten (10) MMBtu/hr, exhausting through a heat exchanger to one (1) spray scrubber (OR-C-09-SR3015), one (1) cyclone (OR-C-09-CY-3025), and one (1) baghouse (OR-C-09-DC3030), in series, exhausting to stack OR-C-09-ST3045.

(i) One (1) Feed Enhancement Reactor (FER) rotary kiln, identified as FERC4, approved for construction in 2010, with a maximum capacity of seven (7) tons of coal per hour, equipped with natural gas-fired low-NOx burners with a combined maximum heat input capacity of four (4) MMBtu/hr, and one (1) integral afterburner, identified as FERAB C4, equipped with natural gas-fired burners with a combined maximum heat input capacity of ten (10) MMBtu/hr, exhausting through a heat exchanger to one (1) spray scrubber (OR-C-09-SR4015), one (1) cyclone (OR-C-09-CY-4025), and one (1) baghouse (OR-C-09-DC4030), in series, exhausting to stack OR-C-09-ST4045.

(j) Four (4) coal tar reclaimer systems, identified as RCLM C1 - RCLM C4, approved for construction in 2010, each with a maximum capacity of 2,000 pounds of coal tar recovered per hour, one system dedicated to each of FER C1 - FER C4, consisting of the following:

(1) Four (4) reformers, one (1) per FER, operating at a temperature range of 500 ^{0}F - 800 ^{0}F, for the recovery and distillation of coal tar, with non-recovered vapors exhausting to FERAB C1 - FERAB C4, respectively.

(2) Four (4) coal tar surge tanks, one (1) per FER.

(k) One (1) Carborec Storage and Blending Area C, identified as CBSBC, approved for construction in 2010, consisting of the following:

(1) Carborec crusher feed drag conveyors, each with a rated capacity of 60 tons per hour, ducted to a baghouse (OR-C-05-DC1205), exhausting to stack OR-C-05-ST1205.

(2) Six (6) weigh feeders, each with a rated capacity of 40 tons per hour, and blend #2 drag conveyors, each with a rated capacity of 75 tons per hour, ducted to a baghouse (OR-C-05-DC1405), exhausting to stack OR-C-05-ST1405.

(3) One (1) Carborec storage silo, with a storage capacity of 240 tons, ducted to a baghouse (OR-C-05-DC6070), exhausting to stack OR-C-05-ST6070.

(4) One (1) blend #2 surge bin, with a storage capacity of 440 tons, ducted to a baghouse (OR-C-06-DC1405), exhausting to stack OR-C-06-ST1405.

(5) Three (3) blend #2 weigh feeders, three (3) blend #2 drag conveyors, three (3) blend #2 crushers, three (3) hi-intensive mixers, three (3) pug mills, and three (3) densifers, each with a rated capacity of 30 tons per hour, billet belt conveyors

and one (1) billet roller screener, each with a rated capacity of 80 tons per hour, and one (1) billet fines weigh feeder, with a rated capacity of 10 tons per hour, ducted to a baghouse (OR-C-06-DC1205), exhausting to stack OR-C-06-ST1205.

Under 40 CFR 60, Subpart Y, these facilities are considered coal processing and conveying equipment, or coal storage systems.

(l) One (1) billet transfer area, with emissions uncontrolled, consisting of the following:

(1) Two (2) billet fines open belt conveyors, identified as OR-C-06-CB1140 and OR-C-06- CS1145, approved for construction in 2010, each with a maximum rated capacity of 10 tons per hour.

(2) One (1) billet belt conveyor, identified as OR-C-06-CB1110, approved for construction in 2010, with a maximum rated capacity of 60 tons per hour.

(3) One (1) billet belt conveyor, identified as OR-C-06-CB1120, approved for construction in 2010, with a maximum rated capacity of 60 tons per hour.

(4) One (1) billet shuttle belt, identified as OR-C-CB1125, permitted in 2013, with a maximum rated capacity of 60 tons per hour, equipped with a dust collector for nuisance dust.

(5) Two (2) trolley car loading stations, collectively identified as OR-C-06-LD1128, approved for construction in 2010, each with maximum capacity of 30 tons per hour, equipped with a dust collector for nuisance dust.

(m) One (1) Particle Fusion Reactor (PFR) tunnel kiln, identified as PFRC1, approved for construction in 2010, with a maximum production capacity of 20 tons per hour of Cokonyx, equipped with natural gas-fired low-NOx burners with a combined maximum heat input capacity of fifty (50) MMBtu/hr, with off gases ducted to one (1) afterburner, identified as PFRAB C1, equipped with natural gas-fired burners with a combined maximum heat input capacity of ten (10) MMBtu/hr, exhausting through a clean energy recovery process (CERP) to one (1) spray scrubber (OR-C-10-SR1010), two (2) cyclones in parallel (collectively identified as OR-C-10-CY-1115), and one (1) baghouse (OR-C-10-DC1020), in series, exhausting to stack OR-C-10-ST1025. Under 40 CFR 60, Subpart Dc, this is considered an affected steam generating unit.

(n) One (1) Particle Fusion Reactor (PFR) tunnel kiln, identified as PFRC2, approved for construction in 2010, with a maximum production capacity of 20 tons per hour of Cokonyx, equipped with natural gas-fired low-NOx burners with a combined maximum heat input capacity of fifty (50) MMBtu/hr, with off gases ducted to one (1) afterburner, identified as PFRAB C2, equipped with natural gas-fired burners with a combined maximum heat input capacity of ten (10) MMBtu/hr, exhausting through a clean energy recovery process (CERP) to one (1) spray scrubber (OR-C-10-SR2010), two (2) cyclones in parallel (collectively identified as OR-C-10-CY-2115), and one (1) baghouse (OR-C-10-DC2020), in series, exhausting to stack OR-C-10-ST2025. Under 40 CFR 60, Subpart Dc, this is considered an affected steam generating unit.

(o) One (1) Finish Product Handling and Loading process, approved for construction in 2010, with emissions uncontrolled, consisting of the following equipment:

(1) Four (4) Cokonyx belt conveyors, identified as OR-C-08-CB1020, OR-C-08-CB1030, OR-C-08-CB2020, and OR-C-08-CB2030, each with a maximum rated capacity of 20 tons per hour.

(2) One (1) Cokonyx belt conveyor, identified as OR-C-08-CD1035, with a maximum rated capacity of 40 tons per hour.

(p) One (1) lime storage silo, identified as LSC, approved for construction in 2010, with a storage capacity of 50 tons of lime, equipped with one (1) dust collector (OR-C-12-DC1006), exhausting to stack OR-C-12-ST1006.

(q) Two (2) diesel-fired emergency generators, identified as EGC1 and EGC2, approved for construction in 2010, each with a maximum rated output of 1650 kW. Under 40 CFR 60, Subpart IIII, these are each considered an emergency stationary CI ICE. Under 40 CFR 63, Subpart ZZZZ, these are each considered a new emergency stationary RICE.

(r) One (1) natural gas-fired emergency generator, identified as EGC3, approved for construction in 2010, with a maximum rated output of 450 kW. Under 40 CFR 60, Subpart IIII, this is considered an emergency stationary CI ICE. Under 40 CFR 63, Subpart ZZZZ, this is considered a new emergency stationary RICE.

Carbon Alloy Synthesis Plant (CASP) Module D

(a) Raw Material Receiving Handling and Silos D, identified as RMRHSD, approved for construction in 2010, consisting of the following:

(1) One (1) CDD1 wet coal feed hopper discharge, with a rated capacity of 50 tons per hour, one (1) vibratory feeder, with a rated capacity of 50 tons per hour, and associated drag conveyors, each with a rated capacity of 50 tons per hour, ducted to one (1) baghouse (OR-D-01-DC1105), exhausting to stack OR-D-01-ST1105.

(2) One (1) CDD2 wet coal feed hopper discharge, with a rated capacity of 50 tons per hour, one (1) vibratory feeder, with a rated capacity of 50 tons per hour, and associated drag conveyors, each with a rated capacity of 50 tons per hour, ducted to one (1) dust collector (OR-D-01-DC2105), exhausting to stack OR-D-01-ST2105.

(3) Five (5) dry coal storage silos, each with a storage capacity of 240 tons of dried coal, ducted to dedicated baghouses (OR-D-02-DC1070, OR-D-02-DC2070, OR-D-02-DC3070, OR-D-02-DC4070, and OR-D-02-DC5070, respectively), exhausting to stacks OR-D-02-ST1070, OR-D-02-ST2070, OR-D-02-ST3070, OR-D-02-ST4070, and OR-D-02-ST5070, respectively.

(4) Five (5) blend #1 weigh feeders, each with a rated capacity of 40 tons per hour, and one (1) drag conveyor, with a rated capacity of 60 tons per hour, ducted to one (1) baghouse (OR-D-03-DC1105), exhausting to stack OR-D-03-ST1105.

(5) Four (4) blend #1 feed hoppers, with a rated capacity of 30 tons per hour, and two (2) blend #1 hopper feed drag conveyors, each with a rated capacity of 60 tons per hour, ducted to one (1) baghouse (OR-D-04-DC1105), exhausting to stack OR-D-04-ST1105.

Under 40 CFR 60, Subpart Y, the RMRHSD facilities are considered coal processing and conveying equipment.

(b) One (1) coal dryer and associated dried coal conveyors, collectively identified as CDD1, approved for construction in 2010, with a maximum capacity of 50 tons per hour, utilizing heated air from the FER D1 and FER D2 air to air heat exchangers to dry the coal,

ducted to three (3) cyclones in parallel (collectively identified as OR-D-01-CY-1305) and one (1) dust collector (OR-D-01-DC1205), in series, exhausting to the coal dryer for heat recovery, with excess heat exhausting to stack OR-D-01-ST1215. Under 40 CFR 60, Subpart Y, the dryer is considered a thermal dryer and the associated conveyors are considered coal conveying equipment.

Note: It is not necessary for the baghouse exhaust to be recycled and the system can be operated as a once-through air stream.

(c) One (1) coal crusher and associated crushed coal conveyors, collectively identified as CCD1, approved for construction in 2010, with a maximum capacity of 100 tons per hour, ducted to one (1) dust collector (OR-D-02-DC1105), exhausting to stack OR-D-02-ST1105. Under 40 CFR 60, Subpart Y, this is considered coal processing and conveying equipment.

(d) One (1) coal dryer and associated dried coal conveyors, collectively identified as CDD2, approved for construction in 2010, with a maximum capacity of 50 tons per hour, utilizing heated air from the FER D3 and FER D4 air to air heat exchangers to dry the coal, ducted to three (3) cyclones in parallel (collectively identified as OR-D-01-CY-2305) and one (1) dust collector (OR-D-01-DC2205), in series, exhausting back into the coal dryer for heat recovery, with excess heat exhausting to stack OR-D-01-ST2215. Under 40 CFR 60, Subpart Y, the dryer is considered a thermal dryer and the associated conveyors are considered coal conveying equipment.

Note: It is not necessary for the baghouse exhaust to be recycled and the system can be operated as a once-through air stream.

(e) One (1) coal crusher and associated crushed coal conveyors, collectively identified as CCD2, approved for construction in 2010, with a maximum capacity of 50 tons per hour, ducted to one (1) dust collector (OR-D-02-DC2105), exhausting to stack OR-D-02-ST2105. Under 40 CFR 60, Subpart Y, this is considered coal processing and conveying equipment.

(f) One (1) Feed Enhancement Reactor (FER) rotary kiln, identified as FERD1, approved for construction in 2010, with a maximum capacity of seven (7) tons of coal per hour, equipped with natural gas-fired low-NOx burners with a combined maximum heat input capacity of four (4) MMBtu/hr, and one (1) integral afterburner, identified as FERAB D1, equipped with natural gas-fired burners with a combined maximum heat input capacity of ten (10) MMBtu/hr, exhausting through a heat exchanger to one (1) spray scrubber (OR-D-09-SR1015), one (1) cyclone (OR-D-09-CY-1025), and one (1) baghouse (OR-D-09-DC1030), in series, exhausting to stack OR-D-09-ST1045.

(g) One (1) Feed Enhancement Reactor (FER) rotary kiln, identified as FERD2, approved for construction in 2010, with a maximum capacity of seven (7) tons of coal per hour, equipped with natural gas-fired low-NOx burners with a combined maximum heat input capacity of four (4) MMBtu/hr, and one (1) integral afterburner, identified as FERAB D2, equipped with natural gas-fired burners with a combined maximum heat input capacity of ten (10) MMBtu/hr, exhausting through a heat exchanger to one (1) spray scrubber (OR-D-09-SR2015), one (1) cyclone (OR-D -09-CY-2025), and one (1) baghouse (OR-D-09-DC2030), in series, exhausting to stack OR-D-09-ST2045.

(h) One (1) Feed Enhancement Reactor (FER) rotary kiln, identified as FERD3, approved for construction in 2010, with a maximum capacity of seven (7) tons of coal per hour, equipped with natural gas-fired low-NOx burners with a combined maximum heat input capacity of four (4) MMBtu/hr, and one (1) integral afterburner, identified as FERAB D3, equipped with natural gas-fired burners with a combined maximum heat input capacity of

ten (10) MMBtu/hr, exhausting through a heat exchanger to one (1) spray scrubber (OR-D-09-SR3015), one (1) cyclone (OR-D-09-CY-3025), and one (1) baghouse (OR-D-09-DC3030), in series, exhausting to stack OR-D-09-ST3045.

(i) One (1) Feed Enhancement Reactor (FER) rotary kiln, identified as FERD4, approved for construction in 2010, with a maximum capacity of seven (7) tons of coal per hour, equipped with natural gas-fired low-NOx burners with a combined maximum heat input capacity of four (4) MMBtu/hr, and one (1) integral afterburner, identified as FERAB D4, equipped with natural gas-fired burners with a combined maximum heat input capacity of ten (10) MMBtu/hr, exhausting through a heat exchanger to one (1) spray scrubber (OR-D-09-SR4015), one (1) cyclone (OR-D-09-CY-4025), and one (1) baghouse (OR-D-09-DC4030), in series, exhausting to stack OR-D-09-ST4045.

(j) Four (4) coal tar reclaimer systems, identified as RCLM D1- RCLM D4 approved for construction in 2010, each with a maximum capacity of 2,000 pounds of coal tar recovered per hour, one system dedicated to each of FER D1 - FER D4 consisting of the following:

(1) Four (4) reformers, one (1) per FER, operating at a temperature range of 500 ^{0}F - 800 ^{0}F, for the recovery and distillation of coal tar, with non-recovered vapors exhausting to FERAB D1 - FERAB D4 respectively.

(2) Four (4) coal tar surge tanks, one (1) per FER.

(k) One (1) Carborec Storage and Blending Area D, identified as CBSBD, approved for construction in 2010, consisting of the following:

(1) Carborec crusher feed drag conveyors, each with a rated capacity of 60 tons per hour, ducted to a baghouse (OR-D-05-DC1205), exhausting to stack OR-D-05-ST1205.

(2) Six (6) weigh feeders, each with a rated capacity of 40 tons per hour, and blend #2 drag conveyors, each with a rated capacity of 75 tons per hour, ducted to a baghouse (OR-D-05-DC1405), exhausting to stack OR-D-05-ST1405.

(3) One (1) Carborec storage silo, with a storage capacity of 240 tons, ducted to a baghouse (OR-D-05-DC6070), exhausting to stack OR-D-05-ST6070.

(4) One (1) blend #2 surge bin, with a storage capacity of 440 tons, ducted to a baghouse (OR-D-06-DC1405), exhausting to stack OR-D-06-ST1405.

(5) Three (3) blend #2 weigh feeders, three (3) blend #2 drag conveyors, three (3) blend #2 crushers, three (3) hi-intensive mixers, three (3) pug mills, and three (3) densifiers, each with a rated capacity of 30 tons per hour, billet belt conveyors and one (1) billet roller screener, each with a rated capacity of 80 tons per hour, and one (1) billet fines weigh feeder, with a rated capacity of 10 tons per hour, ducted to a baghouse (OR-D-06-DC1205), exhausting to stack OR-D-06-ST1205.

Under 40 CFR 60, Subpart Y, these facilities are considered coal processing and conveying equipment, or coal storage systems.

(l) One (1) billet transfer area, approved for construction in 2010, with emissions uncontrolled, consisting of the following:

(1) One (1) billet fines hopper, identified as OR-D-06-HP1125, with a maximum rated capacity of 10 tons per hour.

(2) Three (3) billet fines open belt conveyors, identified as OR-D-06-CB1130, OR-D-06-CB1140, and OR-D-06-CB1145, each with a maximum rated capacity of 10 tons per hour.

(3) One (1) billet belt conveyor, identified as OR-D-06-CB1110, with a maximum rated capacity of 60 tons per hour.

(4) One (1) billet hopper, identified as OR-D-06-HP1115, with a maximum storage capacity of 3 tons.

(5) Four (4) billet belt conveyors, identified as OR-D-06-CB1120, OR-D-06-CB2120, OR-D-06-CB1126, and OR-D-06-CB2126, each with a maximum rated capacity of 60 tons per hour.

(6) Two (2) billet vibratory feeders, identified as OR-D-06-VF1125 and OR-D-06-VF2125, each with a rated maximum capacity of 30 tons per hour.

(7) Two (2) trolley car loading stations, collectively identified as OR-D-06-LD1128, each with maximum capacity of 30 tons per hour.

(8) One (1) billet hopper, identified as OR-D-06-HP1135, and five (5) belt conveyors, identified as OR-D-06-CB1150, OR-D-06-CB1160, OR-D-06-CB1170, OR-D-06-CB1180, and OR-D-06-CB1190, each with a rated capacity of 30 tons per hour.

(m) One (1) Particle Fusion Reactor (PFR) tunnel kiln, identified as PFRD1, approved for construction in 2010, with a maximum production capacity of 20 tons per hour of Cokonyx, equipped with natural gas-fired low-NOx burners with a combined maximum heat input capacity of fifty (50) MMBtu/hr, with off gases ducted to one (1) afterburner, identified as PFRAB D1, equipped with natural gas-fired burners with a combined maximum heat input capacity of ten (10) MMBtu/hr, exhausting through a clean energy recovery process (CERP) to one (1) spray scrubber (OR-D-10-SR1010), two (2) cyclones in parallel (collectively identified as OR-D-10-CY-1115), and one (1) baghouse (OR-D-10-DC1020), in series, exhausting to stack OR-D-10-ST1025. Under 40 CFR 60, Subpart Dc, this is considered an affected steam generating unit.

(n) One (1) Particle Fusion Reactor (PFR) tunnel kiln, identified as PFRD2, approved for construction in 2010, with a maximum production capacity of 20 tons per hour of Cokonyx, equipped with natural gas-fired low-NOx burners with a combined maximum heat input capacity of fifty (50) MMBtu/hr, with off gases ducted to one (1) afterburner, identified as PFRAB D2, equipped with natural gas-fired burners with a combined maximum heat input capacity of ten (10) MMBtu/hr, exhausting through a clean energy recovery process (CERP) to one (1) spray scrubber (OR-D-10-SR2010), two (2) cyclones in parallel (collectively identified as OR-D-10-CY-2115), and one (1) baghouse (OR-D-10-DC2020), in series, exhausting to stack OR-D-10-ST2025.

(o) One (1) Finish Product Handling and Loading process, approved for construction in 2010, with emissions uncontrolled, consisting of the following equipment:

(1) Four (4) Cokonyx belt conveyors, identified as OR-D-08-CB1020, OR-D-08-CB1030, OR-D-08-CB2020, and OR-D-08-CB2030, each with a maximum rated capacity of 20 tons per hour.

(2) One (1) Cokonyx belt conveyor, identified as OR-D-08-CD1035, with a maximum rated capacity of 40 tons per hour.

(p) One (1) lime storage silo, identified as LSD, approved for construction in 2010, with a storage capacity of 50 tons of lime, equipped with one (1) dust collector (OR-D-12-DC1006), exhausting to stack OR-D-12-ST1006.

(q) Two (2) diesel-fired emergency generators, identified as EGD1 and EGD2, approved for construction in 2010, each with a maximum rated output of 1650 kW. Under 40 CFR 60, Subpart IIII, these are each considered an emergency stationary CI ICE. Under 40 CFR 63, Subpart ZZZZ, these are each considered a new emergency stationary RICE.

(r) One (1) natural gas-fired emergency generator, identified as EGD3, approved for construction in 2010, with a maximum rated output of 450 kW. Under 40 CFR 60, Subpart IIII, this is considered an emergency stationary CI ICE. Under 40 CFR 63, Subpart ZZZZ, this is considered a new emergency stationary RICE.

CASP Coal Receiving and Handling

(a) Phase 1 CASP C and CASP D coal handling, approved for construction in 2010, consisting of the following:

(1) One (1) feed hopper and conveyor No.1 (PHS1-HC1), with a maximum rated capacity of 100 tons per hour, with emissions uncontrolled.

(2) Two (2) CASP C coal conveyors, identified as PHS1C-C1 and PHS1C-C2, each with a maximum rate of 100 tons per hour, with emissions uncontrolled.

(3) One (1) CASP C coal feed hopper No.2, identified as CASPC-FH2, with a maximum rate of 100 tons per hour, with hopper receiving emissions uncontrolled.

(4) Two (2) CASP D coal conveyors, identified as PHS1D-C1 and PHS1D-C2, each with a maximum rate of 100 tons per hour, with emissions uncontrolled.

(5) One (1) CASP D coal feed hopper No.2, identified as CASPD-FH2, with a maximum rate of 100 tons per hour, with hopper receiving emissions uncontrolled.

(b) Phase 2 CASP coal handling, approved for construction in 2010, consisting of the following:

(1) Two (2) CASP coal conveyors, identified as CASP-C1 and CASP-C2, each with a maximum rate of 100 tons per hour, with emissions uncontrolled.

(2) One (1) CASP rotary stacker CASP-RS1, with a maximum rate of 200 tons per hour, with emissions uncontrolled.

(3) Four (4) CASP coal conveyor feed hoppers No.1, identified as CASPA-FH1, CASPB-FH1, CASPC-FH1, and CASPD-FH1, each with a maximum rate of 100 tons per hour, with emissions uncontrolled.

(4) Two (2) CASP A coal conveyors, identified as CASPA-C1 and CASPA-C2, each with a maximum rated capacity of 100 tons per hour, with emissions uncontrolled.

(5) One (1) CASP A coal feed hopper No.2, identified as CASPA-FH2, with a maximum rate of 100 tons per hour, with hopper receiving emissions uncontrolled.

(6) Two (2) CASP B coal conveyors, identified as CASPB-C1 and CASPB-C2, each with a maximum rated capacity of 100 tons per hour, with emissions uncontrolled.

(7) One (1) CASP B coal feed hopper No.2, identified as CASPB-FH2, with a maximum rate of 100 tons per hour, with hopper receiving emissions uncontrolled.

(8) Two (2) CASP C coal conveyors, identified as CASPC-C1 and CASPC-C2, each with a maximum rated capacity of 100 tons per hour, with emissions uncontrolled.

(9) Two (2) CASP D coal conveyors, identified as CASPD-C1 and CASPD-C2, each with a maximum rated capacity of 100 tons per hour, with emissions uncontrolled.

Under 40 CFR 60, Subpart Y, the CASP Raw Material Receiving and Handling facilities are considered coal processing and conveying equipment, and coal storage systems.

(c) Storage Piles

(1) One (1) PHS1 intermediate coal storage pile No. 1, with a storage capacity of 0.25 acres.
(2) Four (4) PHS1 coal storage piles, with a combined storage capacity of 3.6 acres.
(3) One (1) PHS1 intermediate coal storage pile No. 2, with a storage capacity of 0.25 acres.
(4) Four (4) CASP coal storage piles, with a combined a storage capacity of 3.6 acres.

Under 40 CFR 60, Subpart Y, these storage piles are each considered open storage piles.

CASP Cokonyx Loadout

(a) Two (2) single deck vibratory screener feeders for CASP A, identified as CASPA-VF1 and CASPA-VF2, approved for construction in 2010, each with a maximum rated capacity of 20 tons per hour, with emissions controlled by water suppression, as needed, and ducted to the PFR afterburners (PFRAB A1 and PFRAB A2) for heat recovery.

Note: It is not necessary for the exhaust to be ducted to the PFR afterburners to meet applicable limitations.

(b) Two (2) single deck vibratory screener feeders for CASP B, identified as CASPB-VF1 and CASPB-VF2, approved for construction in 2010, each with a maximum rated capacity of 20 tons per hour, with emissions controlled by water suppression, as needed, and ducted to the PFR afterburners (PFRAB B1 and PFRAB B2) for heat recovery.

Note: It is not necessary for the exhaust to be ducted to the PFR afterburners to meet applicable limitations.

(c) Two (2) single deck vibratory screener feeders for CASP C, identified as CASPC-VF1 and CASPC-VF2, approved for construction in 2010, each with a maximum rated

capacity of 20 tons per hour, with emissions controlled by water suppression, as needed, and ducted to the PFR afterburners (PFRAB C1 and PFRAB C2) for heat recovery.

Note: It is not necessary for the exhaust to be ducted to the PFR afterburners to meet applicable limitations.

(d) Two (2) single deck vibratory screener feeders for CASP D, identified as CASPD-VF1 and CASPD-VF2, approved for construction in 2010, each with a maximum rated capacity of 20 tons per hour, with emissions controlled by water suppression, as needed, and ducted to the PFR afterburners (PFRAB D1 and PFRAB D2) for heat recovery.

Note: It is not necessary for the exhaust to be ducted to the PFR afterburners to meet applicable limitations.

(e) Two (2) emergency product by-pass bunkers for CASP A, identified as CASPA-EB1 and CASPA-EB2, approved for construction in 2010, with emissions uncontrolled.

(f) Two (2) emergency product by-pass bunkers for CASP B, identified as CASPB-EB1 and CASPB-EB2, approved for construction in 2010, with emissions uncontrolled.

(g) Two (2) emergency product by-pass bunkers for CASP C, identified as CASPC-EB1 and CASPC-EB2, approved for construction in 2010, with emissions uncontrolled.

(h) Two (2) emergency product by-pass bunkers for CASP D, identified as CASPD-EB1 and CASPD-EB2, approved for construction in 2010, with emissions uncontrolled.

(i) Two (2) Cokonyx loadout conveyors for CASP A, identified as CKNXC-A1 and CKNXC-A2, approved for construction in 2010, each with a maximum capacity of 20 tons of Cokonyx per hour, with emissions uncontrolled.

(j) Two (2) Cokonyx loadout conveyors for CASP B, identified as CKNXC-B1 and CKNXC-B2, approved for construction in 2010, each with a maximum capacity of 20 tons of Cokonyx per hour, with emissions uncontrolled.

(k) Two (2) Cokonyx loadout conveyors for CASP C, identified as CKNXC-C1 and CKNXC-C2, approved for construction in 2010, each with a maximum capacity of 20 tons of Cokonyx per hour, with emissions uncontrolled.

(l) Two (2) Cokonyx loadout conveyors for CASP D, identified as CKNXC-D1 and CKNXC-D2, approved for construction in 2010, each with a maximum capacity of 20 tons of Cokonyx per hour, with emissions uncontrolled.

(m) One (1) C/D Cokonyx conveyor, identified as CKNXC-C/D, approved for construction in 2010, with a maximum capacity of 57 tons of Cokonyx per hour, with emissions uncontrolled.

(n) One (1) A/B Cokonyx conveyor, identified as CKNXC-A/B, approved for construction in 2010, with a maximum capacity of 57 tons of Cokonyx per hour, with emissions uncontrolled.

(o) Two (2) C/D Cokonyx surge bins, collectively identified as CKNXBin-C/D1, approved for construction in 2010, with a maximum capacity of 147 tons per bin, with emissions uncontrolled.

(p) Two (2) A/B Cokonyx surge bins, collectively identified as CKNXBin-A/B1, approved for construction in 2010, with a maximum storage capacity of 147 tons per silo, with emissions uncontrolled.

(q) Storage Piles

(1) CASP A/B Cokonyx Emergency Storage Pile, with a storage capacity of 0.02 acres.

(2) CASP C/D Cokonyx Emergency Storage Pile, with a storage capacity of 0.02 acres.

Corrective Action Management Unit (CAMU)

(a) One (1) CAMU Evaporative Spray System, with a maximum throughput capacity of 250 gallons per minute (gpm), consisting of 16 spray heads, each with a rated capacity of 14.4 gpm, located on the floor of CAMU Unit 2. The system is fed from a single pump drawing water from the CAMU Unit 1 leachate collection system, which contains non-native materials dredged from the Calumet River.

Fugitive Dust Sources consisting of, but not limited to, the following:

(a) Paved Roads and Parking Lots

(b) Unpaved Roads and Parking Lots

(c) Batch Transfer-Loading and Unloading Operations

(d) Continuous Transfer In and Out of Storage Piles

(e) Batch Transfer Operations-Slag and Kish Handling

(f) Wind Erosion from Storage Piles and Open Areas

(g) In Plant Transfer by Truck or Rail

(h) In Plant Transfer by Front End Loader or Skip Hoist

(i) Material Processing Facility

(j) Crusher Fugitive Emissions

(k) Material Processing Facility Building Openings

(l) Dust Handling Equipment

A.4 Insignificant Activities [326 IAC 2-7-1(21)] [326 IAC 2-7-4(c)][326 IAC 2-7-5(14)]

(a) Specifically regulated insignificant activities:

(1) Degreasing operations that do not exceed 145 gallons per 12 months, except if subject to 326 IAC 20-6. [326 IAC 8-3-5][326 IAC 8-3-6][326 IAC 8-9-1]

(2) Cleaners and solvents characterized as follows:

(A) Having a vapor pressure equal to or less than 2 kPa; 15 mm Hg; or 0.3 psi measured at 38°C (100°F) or;

(B) Having a vapor pressure equal to or less than 0.7 kPA; 5mm Hg; or 0.1 psi measured at 20°C (68°F); the use of which for all cleaners and solvents combined does not exceed 145 gallons per 12 months.[326 IAC 8-3-5][326 IAC 8-3-6][326 IAC 8-9-1]

(3) The following VOC and HAP storage containers:

(A) Storage tanks with capacity less than or equal to 1,000 gallons and annual throughput less than 12,000 gallons. [326 IAC 8-9-1]

(B) Vessels storing lubricating oils, hydraulic oils, machining oils, and machining fluids. [326 IAC 8-9-1]

(4) The following equipment related to manufacturing activities not resulting in the emission of HAPs: brazing equipment, cutting torches, soldering equipment, welding equipment. [326 IAC 6.8-10-3]

(5) Any of the following structural steel and bridge fabrication activities:

(A) Cutting 200,000 linear feet or less of one inch (10) plate or equivalent.

(B) Using 80 tons or less of welding consumables. [326 IAC 6.8-10-3]

(6) Conveyors as follows:

(A) Covered conveyor for coal or coke conveying of less than or equal to 360 tons per day; [326 IAC 6.8-10-3]

(B) Uncovered coal conveying of less than or equal to 120 tons per day. [326 IAC 6.8-10-3]

(7) Coal bunker and coal scale exhausts and associated dust collector vents. [326 IAC 6.8-10-3]

(8) Grinding and machining operations controlled with fabric filters, scrubbers, mist collectors, wet collectors and electrostatic precipitators with a design grain loading of less than or equal to 0.03 grains per actual cubic foot and a gas flow rate less than or equal to 4000 actual cubic feet per minute, including the following: deburring; buffing; polishing; abrasive blasting; pneumatic conveying; and woodworking operations. [326 IAC 6.8-10-3]

(9) Vents from ash transport systems not operated at positive pressure. [326 IAC 6.8-10-3)]

(10) Fuel dispensing activities, including the following:

(A) A gasoline fuel transfer dispensing operation handling less than or equal to one thousand three hundred (1,300) gallons per day and filling storage tanks having a capacity equal to or less than ten thousand five hundred (10,500) gallons. Such storage tanks may be in a fixed location or on mobile equipment. [326 IAC 8-9-1]

(B) A petroleum fuel other than gasoline dispensing facility, having a storage tank capacity less than or equal to ten thousand five hundred (10,500) gallons, and dispensing three thousand five hundred (3,500) gallons per

day or less. A petroleum fuel, other than gasoline, dispensing facility having a storage capacity less than or equal to 10,500 gallons, dispensing less than or equal to 230,000 gallons per month. [326 IAC 8-9-1]

(b) Specifically regulated insignificant activities (former Gary Coal Processing, LP):

(1) Degreasing operations that do not exceed 145 gallons per 12 months, except if subject to 326 IAC 20-6.[326 IAC 8-3-5][326 IAC 8-3-8]

(2) Cleaners and solvents characterized as follows:

(A) Having a vapor pressure equal to or less than 2 kPa; 15 mm Hg; or 0.3 psi measured at 38°C (100°F) or;

(B) Having a vapor pressure equal to or less than 0.7 kPa; 5mm Hg; or 0.1 psi measured at 20°C (68°F); the use of which for all cleaners and solvents combined does not exceed 145 gallons per 12 months. [326 IAC 8-3-2] [326 IAC 8-3-5] [326 IAC 8-3-8]

(3) One (1) 5, 000 gallon #2 diesel fuel tank - A petroleum fuel, other than gasoline, dispensing facility having a storage capacity less than or equal to 10,500 gallons, and dispensing less than or equal to 230,000 gallons per month. [326 IAC 8-9-1]

(c) Other Insignificant Activities

(1) Space heaters, process heaters, or boilers using the following fuels:

(A) Natural gas-fired combustion sources with heat input equal to or less than ten million (10,000,000) Btu per hour.

(B) Fuel oil-fired combustion sources with heat input equal to or less than two million (2,000,000) Btu per hour and firing fuel containing equal or less than five-tenths percent (0.5%) sulfur by weight.

(2) Equipment powered by diesel fuel fired or natural gas fired internal combustion engines of capacity equal to or less than five hundred thousand (500,000) British thermal units per hour except where total capacity of equipment operated by one (1) stationary source as defined by subdivision (38) exceeds two million (2,000,000) British thermal units per hour.

(3) Combustion source flame safety purging on startup.

(4) Refractory storage not requiring air pollution control equipment.

(5) Equipment used exclusively for the following:

(A) Packaging lubricants and greases.

(B) Filling drums, pails, or other packaging containers with the following: Lubricating oils, Waxes and Greases.

(6) Application of: oils; greases; lubricants; and nonvolatile material; as temporary protective coatings.

(7) Closed loop heating and cooling systems.

(8) Rolling oil recovery systems.

(9) Groundwater oil recovery wells.

(10) Activities associated with the treatment of wastewater streams with an oil and grease content less than or equal to 1% by volume.

(11) Water runoff ponds for petroleum coke-cutting and coke storage piles.

(12) Any operation using aqueous solutions containing less than 1% by weight of VOCs, excluding HAPS.

(13) Water based adhesives that are less than or equal to 5% by volume of VOCs excluding HAPs.

(14) Noncontact cooling tower systems with forced or induced draft cooling tower system not regulated under a NESHAP.

(15) Quenching operations used with heat treating operations.

(16) Replacement or repair of electrostatic precipitators, bags in baghouses and filters in other air filtration equipment.

(17) Heat exchanger cleaning and repair.

(18) Process vessel degassing and cleaning to prepare for internal repairs.

(19) Stockpiled soils from soil remediation activities that are covered and waiting transport for disposal.

(20) Paved and unpaved roads and parking lots with public access.

(21) Underground conveyors.

(22) Asbestos abatement projects regulated by 326 IAC 14-10.

(23) Purging of gas lines and vessels that is related to routing maintenance and repair of buildings, structures, or vehicles at the source where air emissions from those activities would not be associated with any production process.

(24) Flue gas conditioning systems and associated chemicals, such as the following: sodium sulfate, ammonia and sulfur trioxide.

(25) Equipment used to collect any material that might be released during a malfunction, process upset, or spill cleanup, including catch tanks, temporary liquid separators, tanks, and fluid handling equipment.

(26) Blow down for any of the following: sight glass; boiler; compressors; pumps; and cooling tower.

(27) Activities associated with emergencies, including the following:

(A) On-site fire training approved by the department.

(B) Emergency generators as follows: Gasoline generators not exceeding one hundred ten (110) horsepower, Diesel generators not exceeding one thousand six hundred (1,600) horsepower and natural gas turbines or reciprocating engines not exceeding one thousand six hundred (1,600) horsepower.

(C) Stationary fire pumps.

(28) Purge double block and bleed valves.

(29) A laboratory as defined in 326 IAC 2-7-1(21)(G).

(30) RCRA groundwater remediation system, identified as GWRP-1 which includes eleven (11) recirculation wells to remove benzene from groundwater through a combination of in-situ air sparging, air stripping and vapor extraction.

(d) Specifically regulated insignificant activities (Carbon Alloy Synthesis Plants):

CASP Module A

(1) One (1) lubricating oil storage tank, identified as STO3 A, approved for construction in 2010, with a storage capacity of 1,000 gallons.

(2) One (1) diesel storage tank, identified as STO4 A, approved for construction in 2010, with a storage capacity of 1,000 gallons.

(3) Two (2) noncontact cooling tower systems, identified as PFRCT A1 and PFRCT A2, approved for construction in 2010, each rated at 20,000 gallons per minute.

(4) One (1) diesel-fired stationary fire pump, identified as FPA, approved for construction in 2010, with a maximum rated output of 315 Hp. Under 40 CFR 60, Subpart IIII, this is considered a fire pump stationary CI ICE. Under 40 CFR 63, Subpart ZZZZ, this is considered an emergency stationary RICE.

(5) One (1) coal tar storage tank, identified as STO1 A, approved for construction in 2010, with a storage capacity of 10,000 gallons.

CASP Module B

(1) One (1) lubricating oil storage tank, identified as STO3 B, approved for construction in 2010, with a storage capacity of 1,000 gallons.

(2) One (1) diesel storage tank, identified as STO4 B, approved for construction in 2010, with a storage capacity of 1,000 gallons.

(3) Two (2) noncontact cooling tower systems, identified as PFRCT B1 and PFRCT B2, approved for construction in 2010, each rated at 20,000 gallons per minute.

(4) One (1) diesel-fired stationary fire pump, identified as FPB, approved for construction in 2010, with a maximum rated output of 315 Hp. Under 40 CFR 60, Subpart IIII, this is considered a fire pump stationary CI ICE. Under 40 CFR 63, Subpart ZZZZ, this is considered an emergency stationary RICE.

(5) Two (2) coal tar storage tanks, identified as STO1 B and STO2 B, approved for construction in 2010, each with a storage capacity of 10,000 gallons.

CASP Module C

(1) One (1) lubricating oil storage tank, identified as STO3 C, approved for construction in 2010, with a storage capacity of 1,000 gallons.

(2) One (1) diesel storage tank, identified as STO4 C, approved for construction in 2010, with a storage capacity of 1,000 gallons.

(3) Two (2) noncontact cooling tower systems, identified as PFRCT C and PFRCT C2, approved for construction in 2010, each rated at 20,000 gallons per minute.

(4) One (1) diesel-fired stationary fire pump, identified as FPC, approved for construction in 2010, with a maximum rated output of 315 Hp. Under 40 CFR 60, Subpart IIII, this is considered a fire pump stationary CI ICE. Under 40 CFR 63, Subpart ZZZZ, this is considered an emergency stationary RICE.

(5) Two (2) coal tar storage tanks, identified as STO1 C and STO2 C, approved for construction in 2010, each with a storage capacity of 10,000 gallons.

CASP Module D

(1) One (1) lubricating oil storage tank, identified as STO3 D, approved for construction in 2010, with a storage capacity of 1,000 gallons.

(2) One (1) diesel storage tank, identified as STO4 D, approved for construction in 2010, with a storage capacity of 1,000 gallons.

(3) Two (2) noncontact cooling tower systems, identified as PFRCT D1 and PFRCT D2, approved for construction in 2010, each rated at 20,000 gallons per minute.

(4) One (1) diesel-fired stationary fire pump, identified as FPD, approved for construction in 2010, with a maximum rated output of 315 Hp. Under 40 CFR 60, Subpart IIII, this is considered a fire pump stationary CI ICE. Under 40 CFR 63, Subpart ZZZZ, this is considered an emergency stationary RICE.

(5) One (1) coal tar storage tank, identified as STO1 D, approved for construction in 2010, with a storage capacity of 10,000 gallons.

CASP Coal Receiving and Handling: Phase 1 CASP C and CASP D Coal Handling

(1) Two (2) CASP C coal conveyors, approved for construction in 2012, identified as PHS1C-C3, and PHS1C-C4, each with a maximum rate of 100 tons per hour, with emissions uncontrolled.

(2) Two (2) CASP D coal conveyors, approved for construction in 2012, identified as PHS1C-D3, and PHS1C-D4, each with a maximum rate of 100 tons per hour, with emissions uncontrolled.

A.5 Part 70 Permit Applicability [326 IAC 2-7-2]

This integrated steel mill is required to have a Part 70 permit by 326 IAC 2-7-2 (Applicability) because:

(a) It is a major source, as defined in 326 IAC 2-7-1(22);

(b) It is a source in a source category designated by the United States Environmental Protection Agency (U.S. EPA) under 40 CFR 70.3 (Part 70 - Applicability).

SECTION B GENERAL CONDITIONS

B.1 Definitions [326 IAC 2-7-1]

Terms in this permit shall have the definition assigned to such terms in the referenced regulation. In the absence of definitions in the referenced regulation, the applicable definitions found in the statutes or regulations (IC 13-11, 326 IAC 1-2 and 326 IAC 2-7) shall prevail.

B.2 Permit Term [326 IAC 2-7-5(2)][326 IAC 2-1.1-9.5][326 IAC 2-7-4(a)(1)(D)][IC 13-15-3-6(a)]

(a) This permit, T089-29907-00121, is issued for a fixed term of five (5) years from the issuance date of this permit, as determined in accordance with IC 4-21.5-3-5(f) and IC 13-15-5-3. Subsequent revisions, modifications, or amendments of this permit do not affect the expiration date of this permit or of permits issued pursuant to Title IV of the Clean Air Act and 326 IAC 21 (Acid Deposition Control).

(b) If IDEM, OAQ, upon receiving a timely and complete renewal permit application, fails to issue or deny the permit renewal prior to the expiration date of this permit, this existing permit shall not expire and all terms and conditions shall continue in effect, including any permit shield provided in 326 IAC 2-7-15, until the renewal permit has been issued or denied.

B.3 Term of Conditions [326 IAC 2-1.1-9.5]

Notwithstanding the permit term of a permit to construct, a permit to operate, or a permit modification, any condition established in a permit issued pursuant to a permitting program approved in the state implementation plan shall remain in effect until:

(a) the condition is modified in a subsequent permit action pursuant to Title I of the Clean Air Act; or

(b) the emission unit to which the condition pertains permanently ceases operation.

B.4 Enforceability [326 IAC 2-7-7] [IC 13-17-12]

Unless otherwise stated, all terms and conditions in this permit, including any provisions designed to limit the source's potential to emit, are enforceable by IDEM, the United States Environmental Protection Agency (U.S. EPA) and by citizens in accordance with the Clean Air Act.

B.5 Severability [326 IAC 2-7-5(5)]

The provisions of this permit are severable; a determination that any portion of this permit is invalid shall not affect the validity of the remainder of the permit.

B.6 Property Rights or Exclusive Privilege [326 IAC 2-7-5(6)(D)]

This permit does not convey any property rights of any sort or any exclusive privilege.

B.7 Duty to Provide Information [326 IAC 2-7-5(6)(E)]

(a) The Permittee shall furnish to IDEM, OAQ, within a reasonable time, any information that IDEM, OAQ may request in writing to determine whether cause exists for modifying, revoking and reissuing, or terminating this permit, or to determine compliance with this permit. Upon request, the Permittee shall also furnish to IDEM, OAQ copies of records required to be kept by this permit.

(b) For information furnished by the Permittee to IDEM, OAQ, the Permittee may include a claim of confidentiality in accordance with 326 IAC 17.1. When furnishing copies of requested records directly to U. S. EPA, the Permittee may assert a claim of confidentiality in accordance with 40 CFR 2, Subpart B.

B.8 Certification [326 IAC 2-7-4(f)][326 IAC 2-7-6(1)][326 IAC 2-7-5(3)(C)]

(a) A certification required by this permit meets the requirements of 326 IAC 2-7-6(1) if:

(1) it contains a certification by a "responsible official", as defined by 326 IAC 2-7-1 (35), and

(2) the certification states that, based on information and belief formed after reasonable inquiry, the statements and information in the document are true, accurate, and complete.

(b) The Permittee may use the attached Certification Form, or its equivalent, with each submittal requiring certification. One (1) certification may cover multiple forms in one (1) submittal.

(c) A "responsible official" is defined at 326 IAC 2-7-1(35).

B.9 Annual Compliance Certification [326 IAC 2-7-6(5)]

(a) The Permittee shall annually submit a compliance certification report which addresses the status of the source's compliance with the terms and conditions contained in this permit, including emission limitations, standards, or work practices. All certifications shall cover the time period from January 1 to December 31 of the previous year, and shall be submitted no later than April 15 of each year to:

Indiana Department of Environmental Management
Compliance and Enforcement Branch, Office of Air Quality
100 North Senate Avenue
MC 61-53 IGCN 1003
Indianapolis, Indiana 46204-2251

and

United States Environmental Protection Agency, Region V
Air and Radiation Division, Air Enforcement Branch - Indiana (AE-17J)
77 West Jackson Boulevard
Chicago, Illinois 60604-3590

(b) The annual compliance certification report required by this permit shall be considered timely if the date postmarked on the envelope or certified mail receipt, or affixed by the shipper on the private shipping receipt, is on or before the date it is due. If the document is submitted by any other means, it shall be considered timely if received by IDEM, OAQ, on or before the date it is due.

(c) The annual compliance certification report shall include the following:

(1) The appropriate identification of each term or condition of this permit that is the basis of the certification;

(2) The compliance status;

(3) Whether compliance was continuous or intermittent;

(4) The methods used for determining the compliance status of the source, currently and over the reporting period consistent with 326 IAC 2-7-5(3); and

(5) Such other facts, as specified in Sections D of this permit, as IDEM, OAQ may require to determine the compliance status of the source.

The submittal by the Permittee does require a certification that meets the requirements of 326 IAC 2-7-6(1) by a "responsible official" as defined by 326 IAC 2-7-1(35).

B.10 Preventive Maintenance Plan [326 IAC 2-7-5(12)] [326 IAC 1-6-3]

(a) The Permittee shall prepare and maintain Preventive Maintenance Plans (PMPs) within ninety (90) days after issuance of this permit, for the source as described in 326 IAC 1-6-3. At a minimum, the PMPs shall include:

(1) Identification of the individual(s) responsible for inspecting, maintaining, and repairing emission control devices;

(2) A description of the items or conditions that will be inspected and the inspection schedule for said items or conditions; and

(3) Identification and quantification of the replacement parts that will be maintained in inventory for quick replacement.

The Permittee shall implement the PMPs.

(b) If required by specific condition(s) in Section D of this permit where no PMP was previously required, the Permittee shall prepare and maintain Preventive Maintenance Plans (PMPs) no later than ninety (90) days after issuance of this permit or ninety (90) days after initial start -up, whichever is later, including the following information on each facility:

(1) Identification of the individual(s) responsible for inspecting, maintaining, and repairing emission control devices;

(2) A description of the items or conditions that will be inspected and the inspection schedule for said items or conditions; and

(3) Identification and quantification of the replacement parts that will be maintained in inventory for quick replacement.

If, due to circumstances beyond the Permittee’s control, the PMPs cannot be prepared and maintained within the above time frame, the Permittee may extend the date an additional ninety (90) days provided the Permittee notifies:

Indiana Department of Environmental Management
Compliance and Enforcement Branch, Office of Air Quality
100 North Senate Avenue
MC 61 -53 IGCN 1003
Indianapolis, Indiana 46204 -2251

The PMP extension notification does not require a certification that meets the requirements of 326 IAC 2 -7 -6(1) by a "responsible official" as defined by 326 IAC 2 -7 -1(35).

The Permittee shall implement the PMPs.

(c) A copy of the PMPs shall be submitted to IDEM, OAQ upon request and within a reasonable time, and shall be subject to review and approval by IDEM, OAQ. IDEM, OAQ may require the Permittee to revise its PMPs whenever lack of proper maintenance causes or is the primary contributor to an exceedance of any limitation on emissions. The

PMPs and their submittal do not require a certification that meets the requirements of 326 IAC 2 -7 -6(1) by a "responsible official" as defined by 326 IAC 2 -7 -1(35).

(d) To the extent the Permittee is required by 40 CFR Part 60/63 to have an Operation Maintenance, and Monitoring (OMM) Plan for a unit, such Plan is deemed to satisfy the PMP requirements of 326 IAC 1 -6 -3 for that unit.

B.11 Emergency Provisions [326 IAC 2-7-16]

(a) An emergency, as defined in 326 IAC 2-7-1(12), is not an affirmative defense for an action brought for noncompliance with a federal or state health-based emission limitation.

(b) An emergency, as defined in 326 IAC 2-7-1(12), constitutes an affirmative defense to an action brought for noncompliance with a technology-based emission limitation if the affirmative defense of an emergency is demonstrated through properly signed, contemporaneous operating logs or other relevant evidence that describe the following:

(1) An emergency occurred and the Permittee can, to the extent possible, identify the causes of the emergency;

(2) The permitted facility was at the time being properly operated;

(3) During the period of an emergency, the Permittee took all reasonable steps to minimize levels of emissions that exceeded the emission standards or other requirements in this permit;

(4) For each emergency lasting one (1) hour or more, the Permittee notified IDEM, OAQ or Northwest Regional Office, within four (4) daytime business hours after the beginning of the emergency, or after the emergency was discovered or reasonably should have been discovered;

Telephone Number: 1-800-451-6027 (ask for Office of Air Quality, Compliance and Enforcement Branch), or
Telephone Number: 317-233-0178 (ask for Office of Air Quality, Compliance and Enforcement Branch)
Facsimile Number: 317-233-6865
Northwest Regional Office phone: (219) 464-0233; fax: (219) 464-0553.

(5) For each emergency lasting one (1) hour or more, the Permittee submitted the attached Emergency Occurrence Report Form or its equivalent, either by mail or facsimile to:

Indiana Department of Environmental Management
Compliance and Enforcement Branch, Office of Air Quality
100 North Senate Avenue
MC 61-53 IGCN 1003
Indianapolis, Indiana 46204-2251

within two (2) working days of the time when emission limitations were exceeded due to the emergency.

The notice fulfills the requirement of 326 IAC 2-7-5(3)(C)(ii) and must contain the following:

(A) A description of the emergency;

(B) Any steps taken to mitigate the emissions; and

(C) Corrective actions taken.

The notification which shall be submitted by the Permittee does not require a certification that meets the requirements of 326 IAC 2-7-6(1) by a "responsible official" as defined by 326 IAC 2-7-1(35).

(6) The Permittee immediately took all reasonable steps to correct the emergency.

(c) In any enforcement proceeding, the Permittee seeking to establish the occurrence of an emergency has the burden of proof.

(d) This emergency provision supersedes 326 IAC 1-6 (Malfunctions). This permit condition is in addition to any emergency or upset provision contained in any applicable requirement.

(e) The Permittee seeking to establish the occurrence of an emergency shall make records available upon request to ensure that failure to implement a PMP did not cause or contribute to an exceedance of any limitations on emissions. However, IDEM, OAQ may require that the Preventive Maintenance Plans required under 326 IAC 2-7-4(c)(8) be revised in response to an emergency.

(f) Failure to notify IDEM, OAQ by telephone or facsimile of an emergency lasting more than one (1) hour in accordance with (b)(4) and (5) of this condition shall constitute a violation of 326 IAC 2-7 and any other applicable rules.

(g) If the emergency situation causes a deviation from a technology-based limit, the Permittee may continue to operate the affected emitting facilities during the emergency provided the Permittee immediately takes all reasonable steps to correct the emergency and minimize emissions.

B.12 Permit Shield [326 IAC 2-7-15][326 IAC 2-7-20][326 IAC 2-7-12]

(a) Pursuant to 326 IAC 2-7-15, the Permittee has been granted a permit shield. The permit shield provides that compliance with the conditions of this permit shall be deemed compliance with any applicable requirements as of the date of permit issuance, provided that either the applicable requirements are included and specifically identified in this permit or the permit contains an explicit determination or concise summary of a determination that other specifically identified requirements are not applicable. The Indiana statutes from IC 13 and rules from 326 IAC, referenced in conditions in this permit, are those applicable at the time the permit was issued. The issuance or possession of this permit shall not alone constitute a defense against an alleged violation of any law, regulation or standard, except for the requirement to obtain a Part 70 permit under 326 IAC 2-7 or for applicable requirements for which a permit shield has been granted.

This permit shield does not extend to applicable requirements which are promulgated after the date of issuance of this permit unless this permit has been modified to reflect such new requirements.

(b) If, after issuance of this permit, it is determined that the permit is in nonconformance with an applicable requirement that applied to the source on the date of permit issuance, IDEM, OAQ shall immediately take steps to reopen and revise this permit and issue a compliance order to the Permittee to ensure expeditious compliance with the applicable requirement until the permit is reissued. The permit shield shall continue in effect so long as the Permittee is in compliance with the compliance order.

(c) No permit shield shall apply to any permit term or condition that is determined after issuance of this permit to have been based on erroneous information supplied in the permit application. Erroneous information means information that the Permittee knew to be false, or in the exercise of reasonable care should have been known to be false, at the time the information was submitted.

(d) Nothing in 326 IAC 2-7-15 or in this permit shall alter or affect the following:

(1) The provisions of Section 303 of the Clean Air Act (emergency orders), including the authority of the U.S. EPA under Section 303 of the Clean Air Act;

(2) The liability of the Permittee for any violation of applicable requirements prior to or at the time of this permit's issuance;

(3) The applicable requirements of the acid rain program, consistent with Section 408(a) of the Clean Air Act; and

(4) The ability of U.S. EPA to obtain information from the Permittee under Section 114 of the Clean Air Act.

(e) This permit shield is not applicable to any change made under 326 IAC 2-7-20(b)(2) (Sections 502(b)(10) of the Clean Air Act changes) and 326 IAC 2-7-20(c)(2) (trading based on State Implementation Plan (SIP) provisions).

(f) This permit shield is not applicable to modifications eligible for group processing until after IDEM, OAQ, has issued the modifications. [326 IAC 2-7-12(c)(7)]

(g) This permit shield is not applicable to minor Part 70 permit modifications until after IDEM, OAQ, has issued the modification. [326 IAC 2-7-12(b)(8)]

B.13 Prior Permits Superseded [326 IAC 2-1.1-9.5][326 IAC 2-7-10.5]

(a) All terms and conditions of permits established prior to T089-29907-00121 and issued pursuant to permitting programs approved into the state implementation plan have been either:

(1) incorporated as originally stated,

(2) revised under 326 IAC 2-7-10.5, or

(3) deleted under 326 IAC 2-7-10.5.

(b) Provided that all terms and conditions are accurately reflected in this permit, all previous registrations and permits are superseded by this Part 70 operating permit, except for permits issued pursuant to Title IV of the Clean Air Act and 326 IAC 21 (Acid Deposition Control)

B.14 Termination of Right to Operate [326 IAC 2-7-10][326 IAC 2-7-4(a)]

The Permittee's right to operate this source terminates with the expiration of this permit unless a timely and complete renewal application is submitted at least nine (9) months prior to the date of expiration of the source’s existing permit, consistent with 326 IAC 2-7-3 and 326 IAC 2-7-4(a).

B.15 Permit Modification, Reopening, Revocation and Reissuance, or Termination [326 IAC 2-7-5(6)(C)][326 IAC 2-7-8(a)][326 IAC 2-7-9]

(a) This permit may be modified, reopened, revoked and reissued, or terminated for cause. The filing of a request by the Permittee for a Part 70 Operating Permit modification,

revocation and reissuance, or termination, or of a notification of planned changes or anticipated noncompliance does not stay any condition of this permit. [326 IAC 2-7-5(6)(C)] The notification by the Permittee does require a certification that meets the requirements of 326 IAC 2-7-6(1) by a "responsible official" as defined by 326 IAC 2-7-1(35).

(b) This permit shall be reopened and revised under any of the circumstances listed in IC 13-15-7-2 or if IDEM, OAQ determines any of the following:

(1) That this permit contains a material mistake.

(2) That inaccurate statements were made in establishing the emissions standards or other terms or conditions.

(3) That this permit must be revised or revoked to assure compliance with an applicable requirement. [326 IAC 2-7-9(a)(3)]

(c) Proceedings by IDEM, OAQ to reopen and revise this permit shall follow the same procedures as apply to initial permit issuance and shall affect only those parts of this permit for which cause to reopen exists. Such reopening and revision shall be made as expeditiously as practicable. [326 IAC 2-7-9(b)]

(d) The reopening and revision of this permit, under 326 IAC 2-7-9(a), shall not be initiated before notice of such intent is provided to the Permittee by IDEM, OAQ at least thirty (30) days in advance of the date this permit is to be reopened, except that IDEM, OAQ may provide a shorter time period in the case of an emergency. [326 IAC 2-7-9(c)]

B.16 Permit Renewal [326 IAC 2-7-3][326 IAC 2-7-4][326 IAC 2-7-8(e)]

(a) The application for renewal shall be submitted using the application form or forms prescribed by IDEM, OAQ and shall include the information specified in 326 IAC 2-7-4. Such information shall be included in the application for each emission unit at this source, except those emission units included on the trivial or insignificant activities list contained in 326 IAC 2-7-1(21) and 326 IAC 2-7-1(42). The renewal application does require a certification that meets the requirements of 326 IAC 2-7-6(1) by a "responsible official" as defined by 326 IAC 2-7-1(35).

Request for renewal shall be submitted to:

Indiana Department of Environmental Management
Permit Administration and Support Section, Office of Air Quality
100 North Senate Avenue
MC 61-53 IGCN 1003
Indianapolis, Indiana 46204-2251

(b) A timely renewal application is one that is:

(1) Submitted at least nine (9) months prior to the date of the expiration of this permit; and

(2) If the date postmarked on the envelope or certified mail receipt, or affixed by the shipper on the private shipping receipt, is on or before the date it is due. If the document is submitted by any other means, it shall be considered timely if received by IDEM, OAQ on or before the date it is due.

(c) If the Permittee submits a timely and complete application for renewal of this permit, the source's failure to have a permit is not a violation of 326 IAC 2-7 until IDEM, OAQ takes

final action on the renewal application, except that this protection shall cease to apply if, subsequent to the completeness determination, the Permittee fails to submit by the deadline specified, pursuant to 326 IAC 2-7-4(a)(2)(D), in writing by IDEM, OAQ any additional information identified as being needed to process the application.

B.17 Permit Amendment or Modification [326 IAC 2-7-11][326 IAC 2-7-12] [40 CFR 72]

(a) Permit amendments and modifications are governed by the requirements of 326 IAC 2-7-11 or 326 IAC 2-7-12 whenever the Permittee seeks to amend or modify this permit.

(b) Any application requesting an amendment or modification of this permit shall be submitted to:

Indiana Department of Environmental Management
Permit Administration and Support Section, Office of Air Quality
100 North Senate Avenue
MC 61-53 IGCN 1003
Indianapolis, Indiana 46204-2251

Any such application does require a certification that meets the requirements of 326 IAC 2-7-6(1) by a "responsible official" as defined by 326 IAC 2-7-1(35).

(c) The Permittee may implement administrative amendment changes addressed in the request for an administrative amendment immediately upon submittal of the request. [326 IAC 2-7-11(c)(3)]

B.18 Permit Revision Under Economic Incentives and Other Programs [326 IAC 2-7-5(8)][326 IAC 2-7-12(b)(2)]

(a) No Part 70 permit revision or notice shall be required under any approved economic incentives, marketable Part 70 permits, emissions trading, and other similar programs or processes for changes that are provided for in a Part 70 permit.

(b) Notwithstanding 326 IAC 2-7-12(b)(1) and 326 IAC 2-7-12(c)(1), minor Part 70 permit modification procedures may be used for Part 70 modifications involving the use of economic incentives, marketable Part 70 permits, emissions trading, and other similar approaches to the extent that such minor Part 70 permit modification procedures are explicitly provided for in the applicable State Implementation Plan (SIP) or in applicable requirements promulgated or approved by the U.S. EPA.

B.19 Operational Flexibility [326 IAC 2-7-20][326 IAC 2-7-10.5]

(a) The Permittee may make any change or changes at the source that are described in 326 IAC 2-7-20(b) or (c), without a prior permit revision, if each of the following conditions is met:

(1) The changes are not modifications under any provision of Title I of the Clean Air Act;

(2) Any preconstruction approval required by 326 IAC 2-7-10.5 has been obtained;

(3) The changes do not result in emissions which exceed the limitations provided in this permit (whether expressed herein as a rate of emissions or in terms of total emissions);

(4) The Permittee notifies the:

Indiana Department of Environmental Management
Permit Administration and Support Section, Office of Air Quality
100 North Senate Avenue
MC 61-53 IGCN 1003
Indianapolis, Indiana 46204-2251

and

United States Environmental Protection Agency, Region V
Air and Radiation Division, Regulation Development Branch - Indiana (AR-18J)
77 West Jackson Boulevard
Chicago, Illinois 60604-3590

in advance of the change by written notification at least ten (10) days in advance of the proposed change. The Permittee shall attach every such notice to the Permittee's copy of this permit; and

(5) The Permittee maintains records on-site, on a rolling five (5) year basis, which document all such changes and emission trades that are subject to 326 IAC 2-7-20(b)(1) or (c)(1). The Permittee shall make such records available, upon reasonable request, for public review.

Such records shall consist of all information required to be submitted to IDEM, OAQ in the notices specified in 326 IAC 2-7-20(b)(1) and (c)(1)

(b) The Permittee may make Section 502(b)(10) of the Clean Air Act changes (this term is defined at 326 IAC 2-7-1(37)) without a permit revision, subject to the constraint of 326 IAC 2-7-20(a). For each such Section 502(b)(10) of the Clean Air Act change, the required written notification shall include the following:

(1) A brief description of the change within the source;

(2) The date on which the change will occur;

(3) Any change in emissions; and

(4) Any permit term or condition that is no longer applicable as a result of the change.

The notification which shall be submitted is not considered an application form, report or compliance certification. Therefore, the notification by the Permittee does not require a certification that meets the requirements of 326 IAC 2-7-6(1) by a “responsible official” as defined by 326 IAC 2-7-1(35).

(c) Emission Trades [326 IAC 2-7-20(c)]
The Permittee may trade emissions increases and decreases at the source, where the applicable SIP provides for such emission trades without requiring a permit revision, subject to the constraints of Section (a) of this condition and those in 326 IAC 2-7-20(c).

(d) Alternative Operating Scenarios [326 IAC 2-7-20(d)]
The Permittee may make changes at the source within the range of alternative operating scenarios that are described in the terms and conditions of this permit in accordance with 326 IAC 2-7-5(9). No prior notification of IDEM, OAQ or U.S. EPA is required.

(e) Backup fuel switches specifically addressed in, and limited under, Section D of this permit shall not be considered alternative operating scenarios. Therefore, the notification requirements of part (a) of this condition do not apply.

(f) This condition does not apply to emission trades of SO_2 or NO_X under 326 IAC 21 or 326 IAC 10-4.

B.20 Source Modification Requirement [326 IAC 2-7-10.5]

A modification, construction, or reconstruction is governed by the requirements of 326 IAC 2.

B.21 Inspection and Entry [326 IAC 2-7-6][IC 13-14-2-2][IC 13-30-3-1][IC 13-17-3-2]

Upon presentation of proper identification cards, credentials, and other documents as may be required by law, and subject to the Permittee's right under all applicable laws and regulations to assert that the information collected by the agency is confidential and entitled to be treated as such, the Permittee shall allow IDEM, OAQ, U.S. EPA, or an authorized representative to perform the following:

(a) Enter upon the Permittee's premises where a Part 70 source is located, or emissions related activity is conducted, or where records must be kept under the conditions of this permit;

(b) As authorized by the Clean Air Act, IC 13-14-2-2, IC 13-17-3-2, and IC 13-30-3-1, have access to and copy any records that must be kept under the conditions of this permit;

(c) As authorized by the Clean Air Act, IC 13-14-2-2, IC 13-17-3-2, and IC 13-30-3-1, inspect any facilities, equipment (including monitoring and air pollution control equipment), practices, or operations regulated or required under this permit;

(d) As authorized by the Clean Air Act, IC 13-14-2-2, IC 13-17-3-2, and IC 13-30-3-1, sample or monitor substances or parameters for the purpose of assuring compliance with this permit or applicable requirements; and

(e) As authorized by the Clean Air Act, IC 13-14-2-2, IC 13-17-3-2, and IC 13-30-3-1, utilize any photographic, recording, testing, monitoring, or other equipment for the purpose of assuring compliance with this permit or applicable requirements.

B.22 Transfer of Ownership or Operational Control [326 IAC 2-7-11]

(a) The Permittee must comply with the requirements of 326 IAC 2-7-11 whenever the Permittee seeks to change the ownership or operational control of the source and no other change in the permit is necessary.

(b) Any application requesting a change in the ownership or operational control of the source shall contain a written agreement containing a specific date for transfer of permit responsibility, coverage and liability between the current and new Permittee. The application shall be submitted to:

Indiana Department of Environmental Management
Permit Administration and Support Section, Office of Air Quality
100 North Senate Avenue
MC 61-53 IGCN 1003
Indianapolis, Indiana 46204-2251

Any such application does require a certification that meets the requirements of 326 IAC 2-7-6(1) by a "responsible official" as defined by 326 IAC 2-7-1(35).

(c) The Permittee may implement administrative amendment changes addressed in the request for an administrative amendment immediately upon submittal of the request. [326 IAC 2-7-11(c)(3)]

B.23 Annual Fee Payment [326 IAC 2-7-19] [326 IAC 2-7-5(7)][326 IAC 2-1.1-7]

(a) The Permittee shall pay annual fees to IDEM, OAQ within thirty (30) calendar days of receipt of a billing. Pursuant to 326 IAC 2-7-19(b), if the Permittee does not receive a bill from IDEM, OAQ the applicable fee is due April 1 of each year.

(b) Except as provided in 326 IAC 2-7-19(e), failure to pay may result in administrative enforcement action or revocation of this permit.

(c) The Permittee may call the following telephone numbers: 1-800-451-6027 or 317-233-4230 (ask for OAQ, Billing, Licensing, and Training Section), to determine the appropriate permit fee.

B.24 Credible Evidence [326 IAC 2-7-5(3)][326 IAC 2-7-6][62 FR 8314] [326 IAC 1-1-6]

For the purpose of submitting compliance certifications or establishing whether or not the Permittee has violated or is in violation of any condition of this permit, nothing in this permit shall preclude the use, including the exclusive use, of any credible evidence or information relevant to whether the Permittee would have been in compliance with the condition of this permit if the appropriate performance or compliance test or procedure had been performed.

SECTION C SOURCE OPERATION CONDITIONS

Entire Source

Emission Limitations and Standards [326 IAC 2-7-5(1)]

C.1 Opacity [326 IAC 5-1]

Pursuant to 326 IAC 5-1-2 (Opacity Limitations), except as provided in 326 IAC 5-1-1 (Applicability) and 326 IAC 5-1-3 (Temporary Alternative Opacity Limitations), opacity shall meet the following, unless otherwise stated in this permit:

(a) Opacity shall not exceed an average of twenty percent (20%) in any one (1) six (6) minute averaging period as determined in 326 IAC 5-1-4.

(b) Opacity shall not exceed sixty percent (60%) for more than a cumulative total of fifteen (15) minutes (sixty (60) readings as measured according to 40 CFR 60, Appendix A, Method 9 or fifteen (15) one (1) minute nonoverlapping integrated averages for a continuous opacity monitor) in a six (6) hour period.

C.2 Open Burning [326 IAC 4-1] [IC 13-17-9]

The Permittee shall not open burn any material except as provided in 326 IAC 4-1-3, 326 IAC 4-1-4 or 326 IAC 4-1-6. The previous sentence notwithstanding, the Permittee may open burn in accordance with an open burning approval issued by the Commissioner under 326 IAC 4-1-4.1.

C.3 Incineration [326 IAC 4-2] [326 IAC 9-1-2]

The Permittee shall not operate an incinerator except as provided in 326 IAC 4-2 or in this permit. The Permittee shall not operate a refuse incinerator or refuse burning equipment except as provided in 326 IAC 9-1-2 or in this permit.

C.4 Fugitive Dust Emissions [326 IAC 6-4]

The Permittee shall not allow fugitive dust to escape beyond the property line or boundaries of the property, right-of-way, or easement on which the source is located, in a manner that would violate 326 IAC 6-4 (Fugitive Dust Emissions). 326 IAC 6-4-2(4) is not federally enforceable.

C.5 Fugitive Particulate Matter Emissions [326 IAC 6.8-10-3]

Pursuant to 326 IAC 6.8-10-3 (formerly 326 IAC 6-1-11.1) (Lake County Fugitive Particulate Matter Control Requirements), the particulate matter emissions from source wide activities shall meet the following requirements:

(a) The average instantaneous opacity of fugitive particulate emissions from a paved road shall not exceed ten percent (10%).

(b) The average instantaneous opacity of fugitive particulate emissions from an unpaved road shall not exceed ten percent (10%).

(c) The opacity of fugitive particulate emissions from exposed areas shall not exceed ten percent (10%) on a six (6) minute average.

(d) The opacity of fugitive particulate emissions from continuous transfer of material onto and out of storage piles shall not exceed ten percent (10%) on a three (3) minute average.

(e) The opacity of fugitive particulate emissions from storage piles shall not exceed ten percent (10%) on a six (6) minute average.

(f) There shall be a zero (0) percent frequency of visible emission observations of a material during the inplant transportation of material by truck or rail at any time.

(g) The opacity of fugitive particulate emissions from the inplant transportation of material by front end loaders and skip hoists shall not exceed ten percent (10%).

(h) Material processing facilities shall include the following:

(1) There shall be a zero (0) percent frequency of visible emission observations from a building enclosing all or part of the material processing equipment, except from a vent in the building.

(2) The PM_{10} emissions from building vents shall not exceed twenty-two thousandths (0.022) grains per dry standard cubic foot and ten percent (10%) opacity.

(3) The PM_{10} stack emissions from a material processing facility shall not exceed twenty-two thousandths (0.022) grains per dry standard cubic foot and ten percent (10%) opacity.

(4) The opacity of fugitive particulate emissions from the material processing facilities, except a crusher at which a capture system is not used, shall not exceed ten percent (10%) opacity.

(5) The opacity of fugitive particulate emissions from a crusher at which a capture system is not used shall not exceed fifteen percent (15%).

(i) The opacity of particulate emissions from dust handling equipment shall not exceed ten percent (10%).

(j) Material transfer limits shall be as follows:

(1) The average instantaneous opacity of fugitive particulate emissions from batch transfer shall not exceed ten percent (10%).

(2) Where adequate wetting of the material for fugitive particulate emissions control is prohibitive to further processing or reuse of the material, the opacity shall not exceed ten percent (10%), three (3) minute average.

(3) Slag and kish handling activities at integrated iron and steel plants shall comply with the following particulate emissions limits:

(A) The opacity of fugitive particulate emissions from transfer from pots and trucks into pits shall not exceed twenty percent (20%) on a six (6) minute average.

(B) The opacity of fugitive particulate emissions from transfer from pits into front end loaders and from transfer from front end loaders into trucks shall comply with the fugitive particulate emission limits in 326 IAC 6.8-10-3(9).

(k) Any facility or operation not specified in 326 IAC 6.8-10-3 shall meet a twenty percent (20%), three (3) minute average opacity standard.

The Permittee shall achieve these limits by controlling fugitive particulate matter emissions according to the attached Fugitive Dust Control Plan.

C.6 Stack Height [326 IAC 1-7]

The Permittee shall comply with the applicable provisions of 326 IAC 1-7 (Stack Height Provisions), for all exhaust stacks through which a potential (before controls) of twenty-five (25) tons per year or more of particulate matter or sulfur dioxide is emitted. The provisions of 326 IAC 1-7-1(3), 326 IAC 1-7-2, 326 IAC 1-7-3(c) and (d), 326 IAC 1-7-4, and 326 IAC 1-7-5(a), (b), and (d) are not federally enforceable.

C.7 Asbestos Abatement Projects [326 IAC 14-10] [326 IAC 18] [40 CFR 61, Subpart M]

(a) Notification requirements apply to each owner or operator. If the combined amount of regulated asbestos containing material (RACM) to be stripped, removed or disturbed is at least 260 linear feet on pipes or 160 square feet on other facility components, or at least thirty-five (35) cubic feet on all facility components, then the notification requirements of 326 IAC 14-10-3 are mandatory. All demolition projects require notification whether or not asbestos is present.

(b) The Permittee shall ensure that a written notification is sent on a form provided by the Commissioner at least ten (10) working days before asbestos stripping or removal work or before demolition begins, per 326 IAC 14-10-3, and shall update such notice as necessary, including, but not limited to the following:

(1) When the amount of affected asbestos containing material increases or decreases by at least twenty percent (20%); or

(2) If there is a change in the following:

(A) Asbestos removal or demolition start date;

(B) Removal or demolition contractor; or

(C) Waste disposal site.

(c) The Permittee shall ensure that the notice is postmarked or delivered according to the guidelines set forth in 326 IAC 14-10-3(2).

(d) The notice to be submitted shall include the information enumerated in 326 IAC 14-10-3(3).

All required notifications shall be submitted to:

Indiana Department of Environmental Management
Compliance and Enforcement Branch, Office of Air Quality
100 North Senate Avenue
MC 61-53 IGCN 1003
Indianapolis, Indiana 46204-2251

The notice shall include a signed certification from the owner or operator that the information provided in this notification is correct and that only Indiana licensed workers and project supervisors will be used to implement the asbestos removal project. The notifications do not require a certification that meets the requirements of 326 IAC 2-7-6(1) by a "responsible official" as defined by 326 IAC 2-7-1(35).

(e) Procedures for Asbestos Emission Control
The Permittee shall comply with the applicable emission control procedures in 326 IAC 14-10-4 and 40 CFR 61.145(c). Per 326 IAC 14-10-1, emission control requirements are applicable for any removal or disturbance of RACM greater than three

(3) linear feet on pipes or three (3) square feet on any other facility components or a total of at least 0.75 cubic feet on all facility components.

(f) Demolition and Renovation
The Permittee shall thoroughly inspect the affected facility or part of the facility where the demolition or renovation will occur for the presence of asbestos pursuant to 40 CFR 61.145(a).

(g) Indiana Licensed Asbestos Inspector
The Permittee shall comply with 326 IAC 14-10-1(a) that requires the owner or operator, prior to a renovation/demolition, to use an Indiana Licensed Asbestos Inspector to thoroughly inspect the affected portion of the facility for the presence of asbestos. The requirement to use an Indiana Licensed Asbestos inspector is not federally enforceable.

Testing Requirements [326 IAC 2-7-6(1)]

C.8 Performance Testing [326 IAC 3-6]

(a) For performance testing required by this permit, a test protocol, except as provided elsewhere in this permit, shall be submitted to:

Indiana Department of Environmental Management
Compliance and Enforcement Branch, Office of Air Quality
100 North Senate Avenue
MC 61-53 IGCN 1003
Indianapolis, Indiana 46204-2251

no later than thirty-five (35) days prior to the intended test date. The protocol submitted by the Permittee does not require a certification that meets the requirements of 326 IAC 2-7-6(1) by a "responsible official" as defined by 326 IAC 2-7-1(35).

(b) The Permittee shall notify IDEM, OAQ of the actual test date at least fourteen (14) days prior to the actual test date. The notification submitted by the Permittee does not require a certification that meets the requirements of 326 IAC 2-7-6(1) by a "responsible official" as defined by 326 IAC 2-7-1(35).

(c) Pursuant to 326 IAC 3-6-4(b), all test reports must be received by IDEM, OAQ not later than forty-five (45) days after the completion of the testing. An extension may be granted by IDEM, OAQ if the Permittee submits to IDEM, OAQ a reasonable written explanation not later than five (5) days prior to the end of the initial forty-five (45) day period.

C.9 Sulfur Fuel Sampling and Analysis (Entire Source) [326 IAC 7-4.1-2]

Pursuant to 326 IAC 7-4.1-2 and in order to comply with sulfur dioxide limitations in the applicable D sections, the Permittee shall submit a sampling and analysis protocol to the Department by July 1, 2006.

(a) The protocol shall contain a description of planned procedures for:

(1) sampling of sulfur-bearing fuels and materials;

(2) analysis of the sulfur content; and

(3) any planned direct measurement of sulfur dioxide emissions vented to the atmosphere; and

(b) Specify the frequency of sampling, analysis, and measurement for each fuel and material and for each emissions unit.

(c) The protocol may be revised as necessary with approval by IDEM-OAQ.

(d) IDEM, OAQ may also require that a source conduct a stack test at any facility listed in this permit within sixty (60) days of written notification by the IDEM-OAQ.

Compliance Requirements [326 IAC 2-1.1-11]

C.10 Compliance Requirements [326 IAC 2-1.1-11]

The commissioner may require stack testing, monitoring, or reporting at any time to assure compliance with all applicable requirements by issuing an order under 326 IAC 2-1.1-11. Any monitoring or testing shall be performed in accordance with 326 IAC 3 or other methods approved by the commissioner or the U. S. EPA.

Compliance Monitoring Requirements [326 IAC 2-7-5(1)][326 IAC 2-7-6(1)]

C.11 Compliance Monitoring [326 IAC 2-7-5(3)][326 IAC 2-7-6(1)][40 CFR 64][326 IAC 3-8]

(a) For new units:
Unless otherwise specified in the approval for the new emission unit(s), compliance monitoring for new emission units shall be implemented on and after the date of initial start-up.

(b) For existing units:
Unless otherwise specified in this permit, for all monitoring requirements not already legally required, the Permittee shall be allowed up to ninety (90) days from the date of permit issuance, to begin such monitoring. If due to circumstances beyond the Permittee's control, any monitoring equipment required by this permit cannot be installed and operated no later than ninety (90) days after permit issuance, the Permittee may extend the compliance schedule related to the equipment for an additional ninety (90) days provided the Permittee notifies:

Indiana Department of Environmental Management
Compliance and Enforcement Branch, Office of Air Quality
100 North Senate Avenue
MC 61-53 IGCN 1003
Indianapolis, Indiana 46204-2251

in writing, prior to the end of the initial ninety (90) day compliance schedule, with full justification of the reasons for the inability to meet this date.

The notification which shall be submitted by the Permittee does require a certification that meets the requirements of 326 IAC 2-7-6(1) by a "responsible official" as defined by 326 IAC 2-7-1(35).

(c) For monitoring required by CAM, at all times, the Permittee shall maintain the monitoring, including but not limited to, maintaining necessary parts for routine repairs of the monitoring equipment.

(d) For monitoring required by CAM, except for, as applicable, monitoring malfunctions, associated repairs, and required quality assurance or control activities (including, as applicable, calibration checks and required zero and span adjustments), the Permittee shall conduct all monitoring in continuous operation (or shall collect data at all required intervals) at all times that the pollutant-specific emissions unit is operating. Data recorded during monitoring malfunctions, associated repairs, and required quality assurance or control activities shall not be used for purposes of this part, including data averages and calculations, or fulfilling a minimum data availability requirement, if applicable. The owner

or operator shall use all the data collected during all other periods in assessing the operation of the control device and associated control system. A monitoring malfunction is any sudden, infrequent, not reasonably preventable failure of the monitoring to provide valid data. Monitoring failures that are caused in part by poor maintenance or careless operation are not malfunctions.

C.12 Continuous Compliance Plan [326 IAC 6.8-8-1] [326 IAC 6.8-8-8]

(a) Pursuant to 326 IAC 6.8-8-1, the Permittee shall submit to IDEM and maintain at source a copy of the Continuous Compliance Plan (CCP). The Permittee shall perform the inspections, monitoring and record keeping in accordance with the information in 326 IAC 6.8-8-5 through 326 IAC 6.8-8-7 or applicable procedures in the CCP.

(b) Pursuant to 326 IAC 6.8-8-8, the Permittee shall update the CCP, as needed, retain a copy of any changes and updates to the CCP at the source and make the updated CCP available for inspection by the department. The Permittee shall submit the updated CCP, if required, to IDEM, OAQ within thirty (30) days of the update.

(c) Pursuant to 326 IAC 6.8-8, failure to submit a CCP, maintain all information required by the CCP at the source, or submit update to a CCP is a violation of 326 IAC 6.8-8.

C.13 Instrument Specifications [326 IAC 2-1.1-11] [326 IAC 2-7-5(3)] [326 IAC 2-7-6(1)]

(a) When required by any condition of this permit, an analog instrument used to measure a parameter related to the operation of an air pollution control device shall have a scale such that the expected maximum reading for the normal range shall be no less than twenty percent (20%) of full scale. The analog instrument shall be capable of measuring values outside of the normal range.

(b) The Permittee may request that the IDEM, OAQ approve the use of an instrument that does not meet the above specifications provided the Permittee can demonstrate that an alternative instrument specification will adequately ensure compliance with permit conditions requiring the measurement of the parameters.

Corrective Actions and Response Steps [326 IAC 2-7-5][326 IAC 2-7-6]

C.14 Emergency Reduction Plans [326 IAC 1-5-2] [326 IAC 1-5-3]

Pursuant to 326 IAC 1-5-2 (Emergency Reduction Plans; Submission):

(a) The Permittee maintain the most recently submitted written emergency reduction plans (ERPs) consistent with safe operating procedures.

(b) Upon direct notification by IDEM, OAQ that a specific air pollution episode level is in effect, the Permittee shall immediately put into effect the actions stipulated in the approved ERP for the appropriate episode level. [326 IAC 1-5-3]

C.15 Risk Management Plan [326 IAC 2-7-5(12)] [40 CFR 68]

If a regulated substance, as defined in 40 CFR 68, is present at a source in more than a threshold quantity, the Permittee must comply with the applicable requirements of 40 CFR 68.

C.16 Response to Excursions or Exceedances [40 CFR 64][326 IAC 3-8] [326 IAC 2-7-5] [326 IAC 2-7-6]

(I) Upon detecting an excursion where a response step is required by the D Section, or an exceedance of a limitation, not subject to CAM, in this permit:

(a) The Permittee shall take reasonable response steps to restore operation of the emissions unit (including any control device and associated capture system) to

its normal or usual manner of operation as expeditiously as practicable in accordance with good air pollution control practices for minimizing excess emissions.

(b) The response shall include minimizing the period of any startup, shutdown or malfunction. The response may include, but is not limited to, the following:

(1) initial inspection and evaluation;

(2) recording that operations returned or are returning to normal without operator action (such as through response by a computerized distribution control system); or

(3) any necessary follow -up actions to return operation to normal or usual manner of operation.

(c) A determination of whether the Permittee has used acceptable procedures in response to an excursion or exceedance will be based on information available, which may include, but is not limited to, the following:

(1) monitoring results;

(2) review of operation and maintenance procedures and records; and/or

(3) inspection of the control device, associated capture system, and the process.

(d) Failure to take reasonable response steps shall be considered a deviation from the permit.

(e) The Permittee shall record the reasonable response steps taken.

(II)

(a) CAM Response to excursions or exceedances.

(1) Upon detecting an excursion or exceedance, subject to CAM, the Permittee shall restore operation of the pollutant-specific emissions unit (including the control device and associated capture system) to its normal or usual manner of operation as expeditiously as practicable in accordance with good air pollution control practices for minimizing emissions. The response shall include minimizing the period of any startup, shutdown or malfunction and taking any necessary corrective actions to restore normal operation and prevent the likely recurrence of the cause of an excursion or exceedance (other than those caused by excused startup or shutdown conditions). Such actions may include initial inspection and evaluation, recording that operations returned to normal without operator action (such as through response by a computerized distribution control system), or any necessary follow-up actions to return operation to within the indicator range, designated condition, or below the applicable emission limitation or standard, as applicable.

(2) Determination of whether the Permittee has used acceptable procedures in response to an excursion or exceedance will be based on information available, which may include but is not limited to, monitoring results,

review of operation and maintenance procedures and records, and inspection of the control device, associated capture system, and the process.

(b) If the Permittee identifies a failure to achieve compliance with an emission limitation, subject to CAM, or standard, subject to CAM, for which the approved monitoring did not provide an indication of an excursion or exceedance while providing valid data, or the results of compliance or performance testing document a need to modify the existing indicator ranges or designated conditions, the Permittee shall promptly notify the IDEM, OAQ and, if necessary, submit a proposed significant permit modification to this permit to address the necessary monitoring changes. Such a modification may include, but is not limited to, reestablishing indicator ranges or designated conditions, modifying the frequency of conducting monitoring and collecting data, or the monitoring of additional parameters.

(c) Based on the results of a determination made under paragraph (II)(a)(2) of this condition, the EPA or IDEM, OAQ may require the Permittee to develop and implement a QIP. The Permittee shall develop and implement a QIP if notified to in writing by the EPA or IDEM, OAQ.

(d) Elements of a QIP:
The Permittee shall maintain a written QIP, if required, and have it available for inspection. The plan shall conform to 40 CFR 64.8 b (2).

(e) If a QIP is required, the Permittee shall develop and implement a QIP as expeditiously as practicable and shall notify the IDEM, OAQ if the period for completing the improvements contained in the QIP exceeds 180 days from the date on which the need to implement the QIP was determined.

(f) Following implementation of a QIP, upon any subsequent determination pursuant to paragraph (II)(a)(2) of this condition the EPA or the IDEM, OAQ may require that the Permittee make reasonable changes to the QIP if the QIP is found to have:

(1) Failed to address the cause of the control device performance problems; or

(2) Failed to provide adequate procedures for correcting control device performance problems as expeditiously as practicable in accordance with good air pollution control practices for minimizing emissions.

(g) Implementation of a QIP shall not excuse the Permittee from compliance with any existing emission limitation or standard, or any existing monitoring, testing, reporting or recordkeeping requirement that may apply under federal, state, or local law, or any other applicable requirements under the Act.

(h) CAM recordkeeping requirements.

(1) The Permittee shall maintain records of monitoring data, monitor performance data, corrective actions taken, any written quality improvement plan required pursuant to paragraph (II)(a) of this condition and any activities undertaken to implement a quality improvement plan, and other supporting information required to be maintained under this condition (such as data used to document the adequacy of monitoring, or records of monitoring maintenance or corrective actions). Section C - General Record Keeping Requirements of this permit contains the

Permittee's obligations with regard to the records required by this condition.

(2) Instead of paper records, the owner or operator may maintain records on alternative media, such as microfilm, computer files, magnetic tape disks, or microfiche, provided that the use of such alternative media allows for expeditious inspection and review, and does not conflict with other applicable recordkeeping requirements

C.17 Actions Related to Noncompliance Demonstrated by a Stack Test [326 IAC 2-7-5][326 IAC 2-7-6]

(a) When the results of a stack test performed in conformance with Section C - Performance Testing, of this permit exceed the level specified in any condition of this permit, the Permittee shall submit a description of its response actions to IDEM, OAQ no later than seventy-five (75) days after the date of the test.

(b) A retest to demonstrate compliance shall be performed no later than one hundred eighty (180) days after the date of the test. Should the Permittee demonstrate to IDEM, OAQ that retesting in one hundred eighty (180) days is not practicable, IDEM, OAQ may extend the retesting deadline.

(c) IDEM, OAQ reserves the authority to take any actions allowed under law in response to noncompliant stack tests.

The response action documents submitted pursuant to this condition do require a certification that meets the requirements of 326 IAC 2-7-6(1) by a "responsible official" as defined by 326 IAC 2-7-1(35).

Record Keeping and Reporting Requirements [326 IAC 2-7-5(3)] [326 IAC 2-7-19]

C.18 Emission Statement [326 IAC 2-7-5(3)(C)(iii)][326 IAC 2-7-5(7)][326 IAC 2-7-19(c)][326 IAC 2-6]

(a) Pursuant to 326 IAC 2-6-3(a)(1), the Permittee shall submit by July 1 of each year an emission statement covering the previous calendar year. The emission statement shall contain, at a minimum, the information specified in 326 IAC 2-6-4(c) and shall meet the following requirements:

(1) Indicate estimated actual emissions of all pollutants listed in 326 IAC 2-6-4(a);

(2) Indicate estimated actual emissions of regulated pollutants as defined by 326 IAC 2-7-1 (32) ("Regulated pollutant, which is used only for purposes of Section 19 of this rule") from the source, for purpose of fee assessment.

The statement must be submitted to:

Indiana Department of Environmental Management
Technical Support and Modeling Section, Office of Air Quality
100 North Senate Avenue
MC 61-50 IGCN 1003
Indianapolis, Indiana 46204-2251

The emission statement does require a certification that meets the requirements of 326 IAC 2-7-6(1) by a "responsible official" as defined by 326 IAC 2-7-1(35).

C.19 General Record Keeping Requirements [326 IAC 2-7-5(3)] [326 IAC 2-7-6] [326 IAC 2-2][326 IAC 2-3]

(a) Records of all required monitoring data, reports and support information required by this permit shall be retained for a period of at least five (5) years from the date of monitoring

sample, measurement, report, or application. Support information includes the following, where applicable:

(AA) All calibration and maintenance records.
(BB) All original strip chart recordings for continuous monitoring instrumentation.
(CC) Copies of all reports required by the Part 70 permit.

Records of required monitoring information include the following, where applicable:

(AA) The date, place, as defined in this permit, and time of sampling or measurements.
(BB) The dates analyses were performed.
(CC) The company or entity that performed the analyses.
(DD) The analytical techniques or methods used.
(EE) The results of such analyses.
(FF) The operating conditions as existing at the time of sampling or measurement.

These records shall be physically present or electronically accessible at the source location for a minimum of three (3) years. The records may be stored elsewhere for the remaining two (2) years as long as they are available upon request. If the Commissioner makes a request for records to the Permittee, the Permittee shall furnish the records to the Commissioner within a reasonable time.

(b) Unless otherwise specified in this permit, for all record keeping requirements not already legally required, the Permittee shall be allowed up to ninety (90) days from the date of permit issuance or the date of initial start -up, whichever is later, to begin such record keeping.

(c) If there is a reasonable possibility (as defined in 326 IAC 2-2-8 (b)(6)(A), 326 IAC 2-2-8 (b)(6)(B), 326 IAC 2-3-2 (l)(6)(A), and/or 326 IAC 2-3-2 (l)(6)(B)) that a “project” (as defined in 326 IAC 2-2-1(oo) and/or 326 IAC 2-3-1(jj)) at an existing emissions unit, other than projects at a source with a Plantwide Applicability Limitation (PAL), which is not part of a “major modification” (as defined in 326 IAC 2-2-1(dd) and/or 326 IAC 2-3-1(y)) may result in significant emissions increase and the Permittee elects to utilize the “projected actual emissions” (as defined in 326 IAC 2-2-1(pp) and/or 326 IAC 2-3-1(kk)), the Permittee shall comply with following:

(1) Before beginning actual construction of the “project” (as defined in 326 IAC 2 -2 -1(oo) and/or 326 IAC 2 -3 -1(jj)) at an existing emissions unit, document and maintain the following records:

(A) A description of the project.

(B) Identification of any emissions unit whose emissions of a regulated new source review pollutant could be affected by the project.

(C) A description of the applicability test used to determine that the project is not a major modification for any regulated NSR pollutant, including:

(i) Baseline actual emissions;

(ii) Projected actual emissions;

(iii) Amount of emissions excluded under section 326 IAC 2 -2 -1(pp)(2)(A)(iii) and/or 326 IAC 2 -3 -1 (kk)(2)(A)(iii); and

(iv) An explanation for why the amount was excluded, and any netting calculations, if applicable.

(d) If there is a reasonable possibility (as defined in 326 IAC 2-2-8 (b)(6)(A) and/or 326 IAC 2-3-2 (l)(6)(A)) that a “project” (as defined in 326 IAC 2-2-1(oo) and/or 326 IAC 2-3-1(jj)) at an existing emissions unit, other than projects at a source with a Plantwide Applicability Limitation (PAL), which is not part of a “major modification” (as defined in 326 IAC 2-2-1(dd) and/or 326 IAC 2-3-1(y)) may result in significant emissions increase and the Permittee elects to utilize the “projected actual emissions” (as defined in 326 IAC 2-2-1(pp) and/or 326 IAC 2-3-1(kk)), the Permittee shall comply with following:

(1) Monitor the emissions of any regulated NSR pollutant that could increase as a result of the project and that is emitted by any existing emissions unit identified in (1)(B) above; and

(2) Calculate and maintain a record of the annual emissions, in tons per year on a calendar year basis, for a period of five (5) years following resumption of regular operations after the change, or for a period of ten (10) years following resumption of regular operations after the change if the project increases the design capacity of or the potential to emit that regulated NSR pollutant at the emissions unit.

C.20 Sulfur Record keeping Requirements (Entire Source) [326 IAC 7-4.1-20(c)(1)]

Pursuant to 326 IAC 7-4.1-20(c)(1), the Permittee shall record and make available to IDEM, upon request, process and fuel use information pertaining to each emissions unit, process, or combustion unit identified in this section, including the following:

(a) Identification of the applicable limit.

(b) The amount and type each fuel used for each facility for each calendar day of operation.

(c) The operating scenario chosen for the U.S. Steel – Gary Works.

(d) The hourly sulfur dioxide emission rate in pounds of sulfur dioxide per hour calculated by dividing the total daily sulfur dioxide emissions in pounds of sulfur dioxide per day by twenty-four (24) hours.

(e) The hourly sulfur dioxide emission rate in pounds of sulfur dioxide per MMBtu for those facilities with a pound per MMBtu limit in this rule calculated by dividing the total daily sulfur dioxide emissions in pounds of sulfur dioxide per day by the total heat input per day in MMBtu.

C.21 General Reporting Requirements [326 IAC 2-7-5(3)(C)] [326 IAC 2-1.1-11] [326 IAC 2-2][326 IAC 2-3][40 CFR 64][326 IAC 3-8]

(a) The Permittee shall submit the attached Quarterly Deviation and Compliance Monitoring Report or its equivalent. Proper notice submittal under Section B –Emergency Provisions satisfies the reporting requirements of this paragraph. Any deviation from permit requirements, the date(s) of each deviation, the cause of the deviation, and the response steps taken must be reported except that a deviation required to be reported pursuant to an applicable requirement that exists independent of this permit, shall be reported according to the schedule stated in the applicable requirement and does not need to be included in this report. This report shall be submitted not later than thirty (30) days after the end of the reporting period. The Quarterly Deviation and Compliance Monitoring Report shall include a certification that meets the requirements of 326 IAC 2-7-6(1) by a "responsible official" as defined by 326 IAC 2-7-1(35). A deviation is an exceedance of a permit limitation or a failure to comply with a requirement of the permit.

On and after the date by which the Permittee must use monitoring that meets the requirements of 40 CFR Part 64 and 326 IAC 3-8, the Permittee shall submit CAM reports to the IDEM, OAQ.

A report for monitoring under 40 CFR Part 64 and 326 IAC 3-8 shall include, at a minimum, the information required under paragraph (a) of this condition and the following information, as applicable:

(1) Summary information on the number, duration and cause (including unknown cause, if applicable) of excursions or exceedances, as applicable, and the corrective actions taken;

(2) Summary information on the number, duration and cause (including unknown cause, if applicable) for monitor downtime incidents (other than downtime associated with zero and span or other daily calibration checks, if applicable); and

(3) A description of the actions taken to implement a QIP during the reporting period as specified in Section C-Response to Excursions or Exceedances. Upon completion of a QIP, the owner or operator shall include in the next summary report documentation that the implementation of the plan has been completed and reduced the likelihood of similar levels of excursions or exceedances occurring.

The Permittee may combine the Quarterly Deviation and Compliance Monitoring Report and a report pursuant to 40 CFR 64 and 326 IAC 3-8.

(b) The address for report submittal is:

Indiana Department of Environmental Management
Compliance and Enforcement Branch, Office of Air Quality
100 North Senate Avenue
MC 61 -53 IGCN 1003
Indianapolis, Indiana 46204 -2251

(c) Unless otherwise specified in this permit, any notice, report, or other submission required by this permit shall be considered timely if the date postmarked on the envelope or certified mail receipt, or affixed by the shipper on the private shipping receipt, is on or before the date it is due. If the document is submitted by any other means, it shall be considered timely if received by IDEM, OAQ on or before the date it is due.

(d) Reporting periods are based on calendar years, unless otherwise specified in this permit. For the purpose of this permit “calendar year” means the twelve (12) month period from January 1 to December 31 inclusive.

(e) If the Permittee is required to comply with the recordkeeping provisions of (d) in Section C - General Record Keeping Requirements for any “project” (as defined in 326 IAC 2-2-1(oo) and/or 326 IAC 2-3-1(jj)) *at an existing emissions unit*, and the project meets the following criteria, then the Permittee shall submit a report to IDEM, OAQ:

(1) The annual emissions, in tons per year, from the project identified in (c)(1) in Section C - General Record Keeping Requirements exceed the baseline actual emissions, as documented and maintained under Section C - General Record

Keeping Requirements (c)(1)(C)(i), by a significant amount, as defined in 326 IAC 2-2-1(ww) and/or 326 IAC 2-3-1(pp), for that regulated NSR pollutant, and

(2) The emissions differ from the preconstruction projection as documented and maintained under Section C - General Record Keeping Requirements (c)(1)(C)(ii).

(f) The report for project at an existing emissions *unit* shall be submitted no later than sixty (60) days after the end of the year and contain the following:

(1) The name, address, and telephone number of the major stationary source.

(2) The annual emissions calculated in accordance with (d)(1) and (2) in Section C - General Record Keeping Requirements.

(3) The emissions calculated under the actual-to-projected actual test stated in 326 IAC 2-2-2(d)(3) and/or 326 IAC 2-3-2(c)(3).

(4) Any other information that the Permittee wishes to include in this report such as an explanation as to why the emissions differ from the preconstruction projection.

Reports required in this part shall be submitted to:

Indiana Department of Environmental Management
Compliance and Enforcement Branch, Office of Air Quality
100 North Senate Avenue
MC 61-53 IGCN 1003
Indianapolis, Indiana 46204 -2251

(g) The Permittee shall make the information required to be documented and maintained in accordance with (c) in Section C - General Record Keeping Requirements available for review upon a request for inspection by IDEM, OAQ. The general public may request this information from the IDEM, OAQ under 326 IAC 17.1.

C.22 Sulfur Dioxide (SO2) Reporting Requirements (Entire Source) [326 IAC 7-4.1-20(c)(2)]

Pursuant to 326 IAC 7-4.1-20(c)(2), the Permittee shall submit an exception report to IDEM, OAQ, within thirty (30) days of an exceedance of the limitations in this permit that included the following:

(a) Identification of the applicable limit or limits being exceeded.

(b) Identification of any emissions unit exceeding the applicable limit and the dates when the limits were exceeded.

(c) The calculated sulfur dioxide emission rate in pounds per hour for each facility exceeding the limitations for the days that the pounds per hour limitations were exceeded.

(d) The calculated sulfur dioxide emission rate in pounds per million Btu for each combustion unit, furnace, boiler, or process operation for each facility exceeding the pounds per million Btu limitation for the days that the limitations were exceeded.

(e) The actual daily fuel usage for each combustion unit, furnace, boiler, or process operation for each facility exceeding the limitations for the days that the limitations were exceeded.

Stratospheric Ozone Protection

C.23 Compliance with 40 CFR 82 and 326 IAC 22-1

Pursuant to 40 CFR 82 (Protection of Stratospheric Ozone), Subpart F, except as provided for motor vehicle air conditioners in Subpart B, the Permittee shall comply with applicable standards for recycling and emissions reduction.

SECTION D.1 FACILITY OPERATION CONDITIONS

Emission Unit Description: One (1) Coal Handling Operation

(a) One (1) coal car bottom thaw shed (holding yard), identified as CHY00071, constructed in 1959, combusting coke oven gas, with a maximum heat input capacity of 25 MMBtu per hour, with an open flame heater, with uncontrolled fugitive emissions.

(b) One (1) coal car side thaw station, identified as CHT0001, constructed in 1959, combusting natural gas, with a maximum heat input capacity of 15 MMBtu per hour, with an open flame heater, with uncontrolled fugitive emissions.

(c) One (1) No. 2 Coke Battery Precarbonization facility, consisting of three (3) lines, Line A, Line B and Line C identified as CH2A0020, CH2B0021 and CH2C0022, constructed prior to October 24, 1974, each with a maximum capacity of 153.5 tons per hour. Particulate matter emissions from the three lines are controlled by electrostatic precipitators (ESP), ESP A, ESP B and ESP C, identified as CH3029, CH3030 and CH3031, exhausting through stacks CH6034, CH6035 and CH6037, respectively.

(d) One (1) coal crusher: system consisting of three (3) enclosed hammer mills with a maximum capacity of 160 tons per hour, three (3) enclosed hammer mills with a maximum capacity of 150 tons per hour, and two (2) enclosed hammer mills with a maximum capacity of 100 tons per hour, with fugitive emissions contained within the coal blending building.

(e) One (1) enclosed petroleum coke crusher with a maximum capacity of 400 tons per hour which also operates as a coal breaker with a maximum capacity of 1200 tons per hour. This unit is a totally enclosed hammer mill with fugitive emissions contained within the coal blending building.

(f) Coal Handling Storage Facilities, identified as CHSQ0003.

(g) One (1) frozen coal breaker, installed in 1959, with a maximum capacity of 1300 tons per hour, with fugitive emissions contained within the coal blending building.

(The information describing the process contained in this facility description box is descriptive information and does not constitute enforceable conditions.)

Emission Limitations and Standards [326 IAC 2-7-5(1)]

D.1.1 Lake County PM_{10} Emission Requirements [326 IAC 6.8-2-38] [326 IAC 11-3-2(a)]

Pursuant to 326 IAC 6.8-2-38 and 326 IAC 11-3-2(a), the PM_{10} from the No. 2 Coke Battery Precarbonization Lines A, B, and C, ESP stacks CH6034, CH6035 and CH6037 shall comply with the following:

(a) The PM_{10} emissions from the Coke Battery # 2 Precarbonization Lines A, B, and C electrostatic precipitator stacks CH6034, CH6035 and CH6037 shall not exceed a total of 62.5 pounds per hour.

(b) The PM_{10} emissions from the Coke Battery # 3 Precarbonization Lines A, B, and C electrostatic precipitator stacks CH6028, CH6029 and CH6031 shall not exceed a total of 62.5 pounds per hour.

(c) Each emission limit applies to one (1) stack serving one (1) facility unless otherwise noted. The emissions limitations apply to one (1) stack serving the multiple units specified when the facility description notes stack serving, and to each stack of multiple stacks serving multiple facilities when the facility description notes each stack serving.

D.1.2 Fugitive Dust Emission Limitations [326 IAC 6-4-2][326 IAC 6.8-10-3]

(a) Pursuant to 326 IAC 6-4-2:

(1) The coal car bottom thaw shed CHY00071, coal car side thaw station CHT00001 and pet coke crusher used as a second coal crusher generating fugitive dust shall be in violation of this rule (326 IAC 6-4) if any of the following criteria are violated:

(A) A source or combination of sources which cause to exist fugitive dust concentrations greater than sixty-seven percent (67%) in excess of ambient upwind concentrations as determined by the following formula:

$$P = \frac{100\ (R) - U)}{U}$$

Where
P = Percentage increase
R = Number of particles of fugitive dust measured at downward receptor site
U = Number of particles of fugitive dust measured at upwind or background site

(B) The fugitive dust is comprised of fifty percent (50%) or more respirable dust, then the percent increase of dust concentration in subdivision (1) of this section shall be modified as follows:

$$PR = (1.5 \pm N)\ P$$

Where
N = Fraction of fugitive dust that is respirable dust;
PR = allowable percentage increase in dust concentration above background; and
P = no value greater than sixty-seven percent (67%).

(C) The ground level ambient air concentrations exceed fifty (50) micrograms per cubic meter above background concentrations for a sixty (60) minute period.

(D) If fugitive dust is visible crossing the boundary or property line of a source. This subdivision may be refuted by factual data expressed in subdivisions (1), (2) or (3) of this section. 326 IAC 6-4-2(4) is not federally enforceable.

(2) Pursuant to 326 IAC 6-4-6(6) (Exceptions), fugitive dust from a source caused by adverse meteorological conditions will be considered an exception to this rule (326 IAC 6-4) and therefore not in violation.

(b) Pursuant to 326 IAC 6.8-10-3 Lake County Fugitive Particulate Matter Emissions Limitations, fugitive emissions from coal car bottom thaw shed CHY00071, coal car side thaw station CHT00001 and pet coke crusher used as a second coal crusher generating fugitive dust shall comply with the emission limitations in Section C.5 - Fugitive Dust Emissions.

D.1.3 Coke Oven Battery Emission Limitations - Precarbonization [326 IAC 6.8-9-3(a)(9)(A)] [326 IAC 11-3-2(a)(1)]

(a) Pursuant to 326 IAC 6.8-9-3(a)(9)(A), Particulate emissions from the precarbonization towers shall be limited by the emission limitations contained in 326 IAC 6.8-2-38.

(b) Pursuant to 326 IAC 11-3-2(a)(1), particulate emissions from precarbonization towers shall be limited by the emission limitations determined under 326 IAC 6.8-2-38.

D.1.4 Opacity Limitations [326 IAC 6.8-9-3(a)(9)(B)]

Pursuant to 326 IAC 6.8-9-3(a)(9)(B), the visible emissions from the precarbonization towers shall comply with the requirements set forth in 326 IAC 5.

D.1.5 Coke Oven Battery Opacity Limitations [326 IAC 11-3-2(a)(2)]

Pursuant to 326 IAC 11-3-2(a)(2), the visible emissions from any precarbonization unit shall comply with the requirements set forth in 326 IAC 5-1.

D.1.6 Sulfur Dioxide (SO_2) Limitations [326 IAC 7-4.1-20(c)(3)]

Pursuant to 326 IAC 7-4.1-20(c)(3), an emission unit shall burn natural gas only:

(a) If it is not listed in this rule; or

(b) under any operating condition not specifically listed in this rule.

Compliance Determination Requirements

D.1.7 Testing Requirements [326 IAC 2-7-6(1),(6)][326 IAC 2-1.1-11]

(a) Pursuant to the COMS Waiver, issued by IDEM May 16, 1997, this performance test schedule is the alternative monitoring requirement for the Precarbonization Units, in lieu of installing and operating Continuous Opacity Monitors (COMs) on the three (3) Precarbon ESP stacks CH6034, CH6035, CH6037, as required by 326 IAC 6.8-5-1.

(b) Pursuant to the protocol, incorporated as Exhibit C of the Agreed Order issued March 22, 1996 the Permittee shall conduct the performance test for Particulate Matter, to demonstrate compliance by measuring combined filterable and condensable emissions utilizing Method 5 and Method 202 of 40 CFR 60 Appendix A or other methods as approved by the Commissioner.

(c) Pursuant to Revised Source Testing Protocol for No. 2 Precarbonization Lines for Coke Battery No. 2, in a letter dated June 29, 1998 the Permittee shall conduct the operation of a single Precarbonization Line through two ESPs. In order for the testing to represent the worst case emissions, the Permittee shall operate a single precarbon line through its associated ESP line with the tie lines between ESPs closed during the test. The results of this testing will be considered in compliance if the average PM_{10} (filterable plus condensable) are less than 31.25 pounds per hour.

This test protocol modification reflects the change in operations of ESPs immediately after the precarbonization line returns from the “stand by” mode which results in decreased ESP collection efficiency.

(d) Pursuant to the COMS Waiver, dated May 16, 1997, the Permittee shall conduct performance tests on the No. 2 Precarbonization Lines for Coke Battery No. 2, in accordance with (b) and (c) above for PM_{10} emissions using the schedule and testing frequency established in the COMS Waiver

(e) Testing shall be conducted in accordance with the provisions of 326 IAC 3-6 (Source Sampling Procedures). Section C - Performance Testing contains the Permittee's obligation with regard to the performance testing required by this condition.

D.1.8 Particulate Matter Control

The No. 2 Coke Battery Precarbonization ESPs CH3029, CH3030 and CH3031, shall be in operation for PM_{10} control at all times the No. 2 Coke Battery Precarbonization lines A, B and/or C are in operation.

Compliance Monitoring Requirements

D.1.9 Electrostatic Precipitator (ESPs) Compliance Assurance Monitoring (CAM) [40 CFR Part 64]

Pursuant to 40 CFR Part 64, the Permittee shall comply with the following Compliance Assurance Monitoring requirements for PM/PM10/PM2.5 from the ESPs in conjunction with the No. 2 Precarbonization equipment A, B, and C:

Monitoring Approach:

PARAMETER	MONITORING METHODS	FREQUENCY	ACCEPTABLE RANGE
Oxygen in stack gas	Instrument Analyzer	Continuous	<8%
Percent CO at discharge from combustion chamber	Instrument Analyzer	Continuous	<6%
Primary field voltage/Amps per T/R set	Signal to recording instrument	Continuous	300 volts / 30 amps
Secondary field Voltage/Amps per T/R set	Signal to recording instrument	Continuous	300 volts / 30 amps
Visible emissions	Method 9	2 hours/day for 7 days per week	<10% opacity/ 6-minute average
ESP static pressure	magnehelic	Continuous	positive pressure

When for any one reading, that any parameter reading falls out of the range. the Permittee shall take **a** reasonable response ~~steps~~. Section C - Response to Excursions or Exceedances contains the Permittee's obligation with regard to the reasonable response steps required by this condition.Each parameter falling out of the range is not a deviation from this permit. Failure to take response steps shall be considered a deviation from this permit.

Record Keeping and Reporting Requirements [326 IAC 2-7-5(3)] [326 IAC 2-7-19]

D.1.10 Record Keeping Requirements

(a) To document the compliance status with Condition D.1.8, the Permittee shall maintain records of corrective actions taken in response to excursions of the parameters as required by the CAM Plan for the ESPs (if any are required).

(b) To document the compliance status with the Condition D.1.7 the Permittee shall maintain records of the stack tests conducted in accordance with the COMS Waiver for the No. 2 Precarbon.

(c) Section C - General Record Keeping Requirements contains the Permittee's obligations with regards to the records required by this condition.

D.1.11 Reporting Requirements

Pursuant to the COMS Waiver issued by IDEM May 16, 1997, the Permittee shall submit quarterly reports on relative parameters which are indicative of process and control device operation for the life of the Nos. 2 Coke Battery Precarbonization facility . Section C - General Reporting contains the Permittee's obligation with regard to the reporting required by this condition. The report submitted by the Permittee does require a certification that meets the requirements of 326 IAC 2-7-6(1) by a "responsible official" as defined by 326 IAC 2-7-1(35).

SECTION D.2 OPERATION CONDITIONS

Emission Unit Description: The Coke Battery Operations

(a) No. 2 Coke Battery

(1) One (1) six (6) meter tall vertical flue coke battery with 57 ovens, No. 2 Coke Battery, identified as CP2B0079, constructed in November 1975, with a maximum charging capacity of 217 tons per hour. Excessive coke oven gas back pressure is controlled by three (3) flares lit with internal flare igniters CP3060, CP3061 and CP3062, exhausting to Bypass/Bleeder Flare Stacks CP6105, CP6106 and CP6107.

(2) The No. 2 Coke Battery underfiring system has a maximum combustion heat input capacity of 250 MMBtu per hour, exhausting to stack CP6040 equipped with a continuous opacity monitor (COM).

(3) The No. 2 Coke Battery has a maximum pushing capacity of 161 tons of coke per hour, with particulate emissions controlled by a Mobile Scrubber Car 9119, 9120, 9121 or 9122, identified as CP3034, exhausting to Stack CP6041.

(4) Nos. 2 and 3 Quench Towers identified as CP1Q0080 and CP2Q0081, constructed in 1975, with a maximum combined capacity of 322 tons of coke per hour, and No. 1 Quench Tower identified as CPQ0087 constructed in 1975 with a capacity of 322 tons of coke per hour, each equipped with a quench water header and baffle system with sprays. Nos. 2 and 3 Quench Towers service Nos. 2 and 3 Coke Batteries. No. 1 Quench Tower services Nos. 2, 3, 5 and 7 Coke Batteries.

(5) The No. 2 Coke Battery fugitive emissions are generated from charging operations, off take piping, door leaks, lid leaks and collector main leaks.

(b) No. 5 Coke Battery

(1) One (1) three (3) meter short vertical flue coke oven battery with 77 ovens, No. 5 Coke Battery, identified as CP5B0090, constructed in 1954, with a maximum charging capacity of 84 tons per hour. Excessive coke oven gas back pressure is controlled by two (2) flares lit with internal flare igniters CP3066 and CP3067, exhausting to Bypass/Bleeder Flare stacks CP6111 and CP 6112.

(2) The No. 5 Coke Battery underfiring system has a maximum combustion heat input capacity of 125 MMBtu per hour, exhausting to stack CP6049, equipped with a COM.

(3) The No. 5 and No. 7 Coke Batteries have a combined maximum pushing capacity of 103 tons of coke per hour, with particulate emissions controlled by a common baghouse, identified as CP3041, exhausting to stack CP6050.

(4) Nos. 5 and 6 Quench Towers identified as CP5Q0091 and CP5Q0095, constructed in 1954, with a maximum combined capacity of 103 tons of coke per hour, equipped with a quench water header and baffle system with sprays. These towers service Nos. 5 and 7 Coke Batteries.

(5) The No. 5 Coke Battery fugitive emissions are generated from charging operations, offtake piping, door leaks, lid leaks and collector main leaks.

(c) No. 7 Coke Battery

(1) One (1) three (3) meter short vertical flue coke oven battery, with 77 ovens, No. 7 Coke Battery, identified as CP7B0094, constructed in 1954, with a maximum charging capacity of 84 tons per hour. Excessive coke oven gas back pressure is controlled by two (2) flares lit with internal flare igniters CP3068 and CP3069, exhausting to Bypass/Bleeder Flare stacks CP6113 and CP6114.

(2) The No. 7 Coke Battery underfiring system has a maximum combustion heat input capacity of 125 MMBtu per hour, exhausting to stack CP6053 equipped with a COM.

(3) The No. 5 and No. 7 Coke Batteries have a combined maximum pushing capacity of 103 tons of coke per hour, with particulate emissions controlled by a common baghouse, identified as CP3041, exhausting to stack CP6050.

(4) No. 6 Quench Tower identified as CP5Q0095, constructed in 1954, with a maximum capacity of 103 tons of coke per hour, equipped with a quench water header and baffle system with sprays. Thise tower service Nos. 5 and 7 Coke Batteries.

(5) The No. 7 Coke Battery fugitive emissions are generated from charging operations, offtake piping, door leaks, lids leaks and collector main leaks.

(d) Natural Gas Underfiring Injection System Jets
Three (3) natural gas injection jets, identified as CPNGI001, CPNGI002 and CPNGI003, constructed in 2001, with heat input capacities of 22 MMBtu per hour, 43 MMBtu per hour and 122 MMBtu per hour, respectively. Natural gas injection provides Btu stabilization control, coke oven gas quality control and emergency gas supply to the battery underfiring system.

(The information describing the process contained in this facility description box is descriptive information and does not constitute enforceable conditions.)

Emission Limitations and Standards [326 IAC 2-7-5(1)]

D.2.1 Lake County PM_{10} Emission Requirements [326 IAC 6.8-2-38] [326 IAC 6.8-9-3(a)(8)] [326 IAC 11-3-2(i)]

Pursuant to 326 IAC 6.8-2-38, 326 IAC 6.8-9-3(8)(A) and 326 IAC 11-3-2(i), the PM_{10} emissions from the Nos. 2, 3, 5 and 7 Coke Battery underfiring stacks and Coke Batteries 5/7 baghouse stack CP6050 shall comply with the following:

(a) The PM_{10} emissions from the Coke Battery number 2 underfiring stack CP6040 shall not exceed 32.30 pounds per hour.

(b) The PM_{10} emissions from the Coke Battery number 5 underfiring stack CP6049 shall not exceed 24.70 pounds per hour.

(c) The PM_{10} emissions from the Coke Battery number 7 underfiring stack CP6053 shall not exceed 21.30 pounds per hour.

(d) The PM_{10} emissions from the Coke Battery number 5/7 pushing emissions control baghouse shall not exceed 0.017 pound PM_{10} per ton coke produced and 1.28 pounds per hour.

(e) Each emission limit applies to one (1) stack serving one (1) facility unless otherwise noted. The emissions limitations apply to one (1) stack serving the multiple units specified when the facility description notes stack serving, and to each stack of multiple stacks serving multiple facilities when the facility description notes each stack serving.

D.2.2 Lake County PM10 Coke Battery Emission Requirements [326 IAC 6.8-9]

The Coke Batteries Nos. 2, 5 and 7 shall comply with the following:

(a) Pursuant to 326 IAC 6.8-9-3(1), no visible emissions shall be permitted from more than ten percent (10%) of the observed coke oven doors on any coke oven battery.

(b) Pursuant to 326 IAC 6.8-9-3(2), the visible emissions from the charging operations shall comply with the following:

(1) No visible emissions shall be permitted from the charging system for more than cumulative total of one hundred twenty-five (125) seconds during five (5) consecutive charging periods.

(2) A “charging system” means the equipment required to add coal to a coke battery including a larry car, charge ports, jumper pipe and off take pipe.

(c) Pursuant to 326 IAC 6.8-9-3(3), the emissions from the pushing operations shall comply with the following:

(1) The opacity of emissions from the coke-side of an oven to be pushed, before the first movement of the coke from the oven to the coke car begins, shall not exceed twenty percent (20%).

(2) The opacity of emissions during the pushing operation shall not exceed twenty percent (20%). The pushing shall be considered to begin with the first movement of coke from the oven into the coke car and to end when the quench car enters the quench tower. The opacity shall be determined using 40 CFR 60, Appendix A, Method 9, except that the readings shall be taken at fifteen (15) second intervals. Six (6) consecutive readings shall be averaged to determine the opacity. The observer shall only use those backgrounds that are above the elevation of the battery surface. If this condition cannot be met for six (6) consecutive readings, then the opacity shall be determined using the lesser number of consecutive readings.

(3) The particulate emissions from the pushing control devices: No. 2 Battery Mobile scrubber cars Nos. 9119, 9120, 9121, and 9122 and No. 5 and No. 7 Coke Batteries Pushing Process Baghouse Stack CP6050 shall not exceed four-hundredths (0.04) pound per ton of coke pushed.

(d) Pursuant to [326 IAC 6.8-9-3(4), no visible emissions shall be permitted from more than three percent (3%) of the total charge port lids on operating ovens of a coke oven battery.

(e) Pursuant to 326 IAC 6.8-9-3(5), visible emissions from the Off take Piping shall comply with the following:

(1) No visible emissions shall be permitted from more than five percent (5%) of the total off take piping on any coke oven battery.

(2) At no time, shall the visible emissions from any gooseneck cap opening exceed twenty percent (20%).

(3) An exclusion from the twenty percent (20%) gooseneck cap opacity limit shall be allowed for two (2) minutes after a gooseneck cap is opened.

(f) Pursuant to 326 IAC 6.8-9-3(6), emissions from gas collector mains shall comply with the following:

(1) No visible emissions shall be permitted from the gas collector mains.

(2) Caps on the collector main shall be exempt from requirement during maintenance.

(g) Pursuant to 326 IAC 6.8-9-3(7)(A), the quench water as applied to the coke shall not exceed one thousand five hundred (1,500) milligrams per liter of total dissolved solids (TDS).

(h) Pursuant to 326 IAC 6.8-9-3(7)(B), the Permittee shall submit the following information regarding its quenching operation in a CCP required to be submitted by 326 IAC 6.8-8-1:

(1) The source of quench water, for example, Lake Michigan water only, or a mixture of Lake Michigan water, spent quench water, process water and miscellaneous sources of non process water.

(2) The volume of quench water and proportion of each source of water.

(i) Pursuant to 326 IAC 6.8-9-3(7)(C), all coke oven towers shall be equipped with baffles. Baffles shall cover ninety-five percent (95%) or more of the cross-sectional area of the exhaust vent or stack for straight quench towers and must be maintained in operable condition. For offset quench towers numbers 2 and 3 at U.S. Steel, the number and arrangement of baffles in the tower shall be maintained as designed. Compliance with the quench tower baffle requirement shall be determined by comparison of the number and arrangement of baffles with the submitted plans.

D.2.3 Emission Limitations for Coke Oven Batteries [326 IAC 11-3-2]

The Coke Batteries Nos. 2, 5 and 7 shall each comply with the following requirements:

(a) Pursuant to 326 IAC 11-3-2(b), the visible emissions from the charging system (including any open charge port, off take system, mobile jumper pipe or larry car) shall not be visible for more than a cumulative total of one hundred twenty-five (125) seconds during five (5) consecutive charging periods.

(b) Pursuant to 326 IAC 11-3-2(c), visible emissions shall not be permitted from more than three percent (3%) of the total charge port lids.

(c) Pursuant to 326 IAC 11-3-2(d), no visible emissions shall be permitted from more than five percent (5%) of the total off take piping on any coke oven battery.

(d) Pursuant to 326 IAC 11-3-2(e), no visible emissions shall be permitted from gas collector main on any coke oven battery.

(e) Pursuant to 326 IAC 11-3-2(f), visible emissions shall not be permitted from more than ten percent (10%) of the total coke oven doors on any coke oven battery.

(f) Pursuant to 326 IAC 11-3-2(g), the coke oven batteries pushing emissions requirements shall be as follows:

(1) All coke oven batteries shall be equipped with a device capable of capturing and collecting coke-side particulate matter such that the effluent gas emissions contain no more than four-hundredths (0.04) gram per two (2.0) kilogram of coke pushed.

(2) Such devices shall be designed and operated in compliance with an operating permit to collect ninety percent (90%) of the pushing emissions. If the construction and design of the device have been approved by the commissioner by granting the permit, the device, if operated properly in compliance with the permit conditions, will be assumed to be collecting ninety percent (90%) of the pushing emissions.

(g) Pursuant to 326 IAC 11-3-2(h)(1), the Nos. 1, 2, 3 and 6 quench towers shall not have visible emissions from the quenching of coke with the direct application of water to hot coke unless quenching is conducted under a tower equipped with efficient baffles to impede the release of particulate into the atmosphere. Efficient baffles are baffles taking the form of slats, louvers, screens, or other impediments placed in a configuration within a quench tower to force a change of direction and reduction of velocity of the steam plume to aid in the reduction of particulate matter emitted.

(h) Pursuant to 326 IAC 11-3-2(h)(2), the quench water makeup shall not contain a total dissolved solids content of more than one thousand five hundred (1,500) milligrams per liter.

(i) Pursuant to 326 IAC 11-3-2(i), the visible emissions and particulate emissions from the underfire stacks shall comply with the requirements of Conditions C.1 and D.2.2 of this permit.

D.2.4 Coke Oven Identification [326 IAC 11-3-3]

Pursuant to 326 IAC 11-3-3, the Permittee shall maintain the identity of each coke oven in such a manner that it is easily and readily visible from the topside and on each coke and push-side on every coke oven battery.

D.2.5 Sulfur Dioxide (SO_2) Limitations [326 IAC 7-4.1-20] [326 IAC 11-3-2(i)]

Pursuant to 326 IAC 7-4.1-20(a)(1)(D), the SO_2 emissions from the Coke Battery underfiring stacks CP6040, CP6049 and CP6043 for Nos. 2, 5 and 7 coke batteries shall not exceed the following:

(a) Pursuant to 326 IAC 7-4.1-20(a)(1)(D), during periods when the coke oven gas desulfurization unit is not operating:

Emission Unit	Emission Limit lb/MMBtu	Emission Limit Lb/hr
No. 2 Coke Oven Battery Underfiring stack	1.270 lbs/MMBtu	251.5 lbs/hr
No. 5 and 7 Coke Oven Battery Underfiring stacks	1.270 lbs/MMBtu each	158.75 lbs/hr each

(b) Pursuant to 326 IAC 7-4.1-20(b)(4), during periods when the coke oven gas desulfurization unit is operating:

Emission Unit	Emission Limit lb/MMBtu	Emission Limit Lb/hr
No. 2 Coke Oven Battery Underfiring stack	0.260 lbs/MMBtu	51.5 lbs/hr
No. 5 Coke Oven Battery Underfiring stacks	0.270 lbs/MMBtu	33.8 lbs/hr
No. 7 Coke Oven Battery Underfiring stacks	0.260 lbs/MMBtu	32.5 lbs/hr

D.2.6 Nitrogen Oxide (NO_X) Limitations PSD [326 IAC 2-2] and Emissions Offsets [326 IAC 2-3]

Pursuant to the Significant Source Modification 089-12880-00121, issued July 26, 2001, the Natural gas usage injected through the coke oven battery natural gas injection jets CPNGI001, CPNGI002 and CPNGI003 shall not exceed 178.7 million cubic feet (MMCF) per 12-consecutive month period, with compliance demonstrated at the end of each month. Compliance with this limit makes 326 IAC 2-2 PSD and 326 IAC 2-3 not applicable for the modification.

D.2.7 Prevention of Significant Deterioration (PSD) Minor Limit PM/PM10/NOx/SO2/CO/VOC [326 IAC 2-2]
Nonattainment New Source Review (NSR) Minor Limit PM2.5/SO2 [326 IAC 2-1.1-5]

Pursuant to 326 IAC 2-2 (PSD) and 326 IAC 2-1.1-5 (Nonattainment New Source Review), and in order to render the requirements of 326 IAC 2-2 (PSD and 326 IAC 2-1.1-5 (Nonattainment NSR) not applicable to the Carbon Alloy Synthesis Plant (CASP) modifications (Significant Source Modification (SSM) No. 089-28848-00121 and Significant Permit Modification (SPM) No. 089-29236-00121), the following shall apply:

(a) Prior to startup of the first of the four (4) Carbon Alloy Synthesis Plants (CASP), the Permittee shall decommission and permanently shut down No. 3 Coke Battery.

(b) Within one hundred eighty (180) days after startup of the third Carbon Alloy Synthesis Plant (CASP), the Permittee shall decommission and permanently shut down either No. 5 Coke Battery or No. 7 Coke Battery.

(c) Within one hundred eighty (180) days after startup of the fourth Carbon Alloy Synthesis Plant (CASP), the Permittee shall decommission and permanently shut down either No. 5 Coke Battery or No. 7 Coke Battery, whichever is still operational, and Nos. 5 and 6 Quench Towers.

Compliance with this requirement, in conjunction with other limits taken as part of the CASP modifications (SSM 089-22848-00121 and SPM 089-29236-00121), will ensure the following:

(d) The PM, PM10, NOx, SO2, VOC, and CO net emissions increase from the CASP modifications (SSM 089-22848-00121 and SPM 089-29236-00121) shall be less than twenty-five (25), fifteen (15), forty (40), forty (40), forty (40), and one hundred (100) tons, respectively, per twelve (12) consecutive month period, with compliance determined at the end of each month. Therefore, the requirements of 326 IAC 2-2 (PSD) are rendered not applicable to these modifications.

(e) The PM2.5 and SO2 net emissions increase from the CASP modifications (SSM 089-22848-00121 and SPM 089-29236-00121) shall be less than ten (10) and forty (40) tons, respectively, per twelve (12) consecutive month period, with compliance determined at

the end of each month. Therefore, the requirements of 326 IAC 2-1.1-5 (Nonattainment NSR) are rendered not applicable to these modifications.

Compliance Determination Requirements

D.2.8 Testing Requirements [326 IAC 2-7-6(1), (6)] [326 IAC 2-1.1-11]

(a) Within 2.5 years from the date of the most recent valid compliance demonstration, the Permittee shall perform PM_{10} testing on the No. 2, No. 5 and No. 7 coke batteries underfire Stacks CP6040, CP6045, CP6049 and CP6053, for the purpose of determining compliance with Condition D.2.1, utilizing methods approved by the Commissioner. This test shall be repeated at least once every 2.5 years from the date of the most recent valid compliance demonstration. PM_{10} includes filterable and condensable PM.

(b) Testing shall be conducted in accordance with the provisions of 326 IAC 3-6 (Source Sampling Procedures). Section C - Performance Testing contains the Permittee's obligation with regard to the performance testing required by this condition.

D.2.9 Visible Emission Inspections for Charging [326 IAC 11-3-4(a)]

(a) Pursuant to 326 IAC 11-3-4(a) and in order to demonstrate compliance with Conditions D.2.2(b) and D.2.3(a), the observations shall be made and the identity recorded from any point or points on the topside of a coke oven battery such that the observer can obtain an unobstructed view of the charging operation. The observer shall keep cumulative time of the total number of seconds charging emissions are visible. Time is started when a visible emission appears and is stopped when the visible emission expires. This procedure shall continue throughout the entire charging period. Visible emissions occurring simultaneously from two (2) or more separate points shall be timed as one (1).

(b) Visible emissions shall not be timed from:

(1) Burning coal spilled on the top of the oven or oven lids during charging.

(2) Any equipment other than the charging system or charge ports.

(3) Standpipes during charging.

(4) Charge port lids and the standpipe on the oven most recently charged.

(5) Coke oven doors which may be wind-blown across the topside of a coke oven battery.

(6) Steam from uncombined water.

(c) The time retained is the total time visible emissions are observed during a charge and shall be recorded on a data sheet. If the observations of a consecutive set of five (5) charges are interrupted by an event not in the control of the observer, for example momentary interference by a passing quench car plume, then the data for the interrupted charge(s) shall be discarded and additional consecutive charges shall be observed. Five (5) charges observed as such shall be treated as consecutive charges.

(d) The observer shall discard the data for the charge observed, during each set, which contains the greatest cumulative total number of seconds during which emissions are visible. A set shall consist of the total number of consecutive charges read by the observer during any one (1) observation period, but in no event shall a set exceed twenty (20) consecutive charges.

D.2.10 Charge Port Lids and Off take Piping - Emissions Testing [326 IAC 11-3-4(b)]

Pursuant to 326 IAC 11-3-4(b) and in order to determine compliance with conditions D.2.2(d), (e), D.2.3(b) and (c), the observer shall walk the length of the topside of a coke oven battery, on a line down the middle of the battery, or as close as safety permits, to record the identity of standpipes in a single traverse and charge port lids in a single traverse that have any visible emissions.

(a) Visible emissions shall not be counted from:

(1) Burning coal spilled on the top of the oven or oven lids.

(2) Charge port lids and standpipe lids, from a maximum of three (3) ovens that are opened during a decarbonization period or charging period.

(3) The standpipe on an oven being charged.

(4) Resulting from maintenance work.

(5) Steam caused by the vaporization of wet luting material.

(6) Steam from uncombined water.

(b) Visible emissions from charge port lids shall include all emissions from the charge port casting/lid interface.

(c) Visible emissions from the off take piping assembly shall include any leaks from the following:

(1) Cracks and/or defects in the piping itself.

(2) Flanged joints of any pipes, including the final joint with the collector main.

(3) The standpipe base.

(4) The standpipe lid or along its seal with the standpipe.

(5) Off take piping assembly which is not contained in one (1) of the categories in this subdivision.

D.2.11 Visible Emissions for Oven Doors [326 IAC 11-3-4(c)]

(a) Pursuant to 326 IAC 11-3-4(c) and in order to demonstrate compliance with Conditions D.2.2(a) and D.2.3(e), an observer shall record the starting time of the inspection, then shall move steadily along the push-side or coke-side of a coke oven battery, stopping only to record the identity of any doors of ovens not temporarily or permanently taken out of service that have visible emissions, but not including visible emissions due to steam from uncombined water. The inspector shall have any of the following options:

(1) To wait for any doors which are blocked from the inspector's view to becomes unobstructed.

(2) To continue the inspection and return when the view of the doors becomes unobstructed.

(3) To exclude the obstructed doors from the calculation of the total number of doors observed.

(b) The finishing time of that inspection shall be recorded followed by the inspector repeating the same procedure on the opposite side of the same battery. The inspector shall be positioned either outside of the quench car tracks on the coke-side of the battery or outside of the push-side bench. After a brief scan of a coke oven door, the observer shall proceed in the inspection checking each succeeding door in a like manner.

D.2.12 Visible Emissions Inspections for Gas Collector Main [326 IAC 11-3-4(e)]

Pursuant to 326 IAC 11-3-4(e) and in order to determine compliance with conditions D.2.2(f) and D.2.3(d), the observer shall walk the length of the topside of the gas collector main, to record the number of points in a single traverse from which emissions are visible.

D.2.13 Visible Emissions Inspections Pushing [326 IAC 6.8-9-3(3)]

(a) Pursuant to 326 IAC 6.8-9-3(3)(A) and in order to determine compliance with Condition D.2.2(c)(1), the opacity of emissions from the coke-side of an oven to be pushed, before the first movement of the coke from the oven to the coke car begins shall be determined on an instantaneous basis at the top of the battery. The observer shall be positioned outside of the quench car rails.

(b) Pursuant to 326 IAC 6.8-9-3(3)(B) and in order to determine compliance with Condition D.2.2(c)(2), the opacity of emissions from the pushing operations (begin with the first movement of coke from the oven into the coke car and to end when the quench car enters the quench tower), shall be determined using 40 CFR 60, Appendix A, Method 9, except the readings shall be taken at fifteen (15) second intervals. Six (6) consecutive readings shall be averaged to determine the opacity. The observer shall only use those backgrounds that are above the elevation of the battery surface. If this condition cannot be met for six (6) consecutive readings, then the opacity shall be determined using the lesser number of consecutive readings.

D.2.14 Sulfur Fuel Sampling and Analysis [326 IAC 7-4.1-2)]

To demonstrate compliance with condition D.2.5, the Permittee shall perform Sulfur Fuel Sampling and Analysis. Section C - Sulfur Fuel Sampling and Analysis contains the Permittee's obligation with regard to the sampling and analysis required by this condition.

D.2.15 Particulate Matter Control [326 IAC 2-7-6(6)]

(a) Except as otherwise provided by statute, rule, or this permit, PM control shall be as follows:

(1) The mobile scrubber cars 9119, 9120, 9121 and/or 9122 shall be in operation at all times, when the No. 2 Coke Battery pushing process is in operation to control particulate matter.

(2) The baghouse CP3041 shall be in operation at all times, when the No. 5 and/or 7 Coke Batteries pushing processes are in operation, to control particulate matter.

(b) In the event that bag failure is observed in a multi-compartment baghouse, if operations will continue for ten (10) days or more after the failure is observed before the failed units will be repaired or replaced, the Permittee shall promptly notify the IDEM, OAQ of the expected date the failed units will be repaired or replaced. The notification shall also include the status of the applicable compliance monitoring parameters with respect to normal, and the results of any response actions taken up to the time of notification.

Compliance Monitoring Requirements [326 IAC 2-7-6(1)][326 IAC 2-7-5(1)]

D.2.16 Visible Emissions Notations

(a) Visible emission notations of the No. 2 Coke Oven Battery: mobile scrubber cars 9119, 9120, 9121 and 9122 and the No. 5 and No. 7 Coke Oven Battery: pushing bag house stack CP6050 shall be performed once per day during normal daylight operations when exhausting to the atmosphere. A trained employee shall record whether emissions are normal or abnormal.

(b) For processes operated continuously, "normal" means those conditions prevailing, or expected to prevail, eighty percent (80%) of the time the process is in operation, not counting startup or shut down time.

(c) In the case of batch or discontinuous operations, readings shall be taken during that part of the operation that would normally be expected to cause the greatest emissions.

(d) A trained employee is an employee who has worked at the plant at least one (1) month and has been trained in the appearance and characteristics of normal visible emissions for that specific process.

(e) If abnormal emissions are observed, the Permittee shall take a reasonable response. Section C - Response to Excursions or Exceedances contains the Permittee's obligation with regard to the reasonable response steps required by this condition. Failure to take response steps shall be considered a deviation of this permit.

(f) The Permittee shall comply with the most current Continuous Compliance Plan visible emission evaluation program. Section C - Continuous Compliance Plan contains the Permittee's obligation with regards to the visible emission evaluation program required by this condition.

D.2.17 Parametric Monitoring

(a) The Permittee shall record the pressure drop across the baghouse CP3041 used in conjunction with No. 5 and No. 7 coke oven batteries pushing operations at least once per day when pushing is occurring. When for any one reading, the pressure drop across each baghouse is outside the normal range, the Permittee shall take a reasonable response. The normal range for this unit is a pressure drop between 3.0 and 15.0 inches of water unless a different upper-bound or lower-bound value for this range is determined during the latest stack test. Section C - Response to Excursions or Exceedances contains the Permittee's obligation with regard to the reasonable response steps required by this condition. A pressure reading that is outside the above mentioned range is not a deviation from this permit. Failure to take response steps shall be considered a deviation of this permit.

(b) The instrument used for determining the pressure shall comply with Section C - Instrument Specifications of this permit, shall be subject to approval by IDEM, OAQ and shall be calibrated or replaced at least once every six (6) months or other time period specified by the manufacturer. The Permittee shall maintain records of the manufacturer specifications, if used.

D.2.18 Continuous Opacity Monitoring (COM) [326 IAC 3-5]

Pursuant to 326 IAC 3-5, the continuous monitoring system shall be calibrated, maintained and operated to measure the opacity of the exhaust from the Nos. 2, 5 and 7 Coke Battery underfiring stacks CP6040, CP6049 and CP6053. The continuous opacity monitoring system shall be certified in accordance with and meet the performance specifications of 326 IAC 3-5-2.

D.2.19 Maintenance of Continuous Opacity Monitoring Equipment [326 IAC 2-7-5(3)(A)(iii)]

(a) The Permittee shall install, calibrate, maintain, and operate all necessary continuous opacity monitoring systems (COMS) and related equipment.

(b) All COMS shall meet the performance specifications of 40 CFR 60, Appendix B, Performance Specification No. 1, and are subject to monitor system certification requirements pursuant to 326 IAC 3-5.

(c) In the event that a breakdown of a COMS occurs, a record shall be made of the times and reasons of the breakdown and efforts made to correct the problem.

(d) Whenever a COMS is malfunctioning or is down for maintenance, or repairs for a period of twenty four (24) hours or more, and a backup COMS is not on line within twenty-four (24) hours of shutdown or malfunction of the primary COMS, the Permittee shall provide a certified opacity reader, who may be an employee of the Permittee or an independent contractor, to self-monitor the emissions from the emission unit stack.

(1) Visible emission readings shall be performed in accordance with 40 CFR 60, Appendix A, Method 9, for a minimum of five (5) consecutive six (6) minute averaging periods beginning not more than twenty-four (24) hours after the start of the malfunction or down time.

(2) Method 9 opacity readings shall be repeated for a minimum of five (5) consecutive six (6) minute averaging periods at least twice per day during daylight operations, with at least four (4) hours between each set of readings until a COMS is on line.

(3) Method 9 readings may be discontinued once a COM is online.

(4) Any opacity exceedances determined by Method 9 readings shall be reported with the Quarterly Opacity Exceedances Reports.

(5) If abnormal emissions are observed, the Permittee shall take reasonable response Section C - Response to Excursions and Exceedances contains the Permittee's obligation with regard to the reasonable response steps required by this condition. Observation of abnormal emissions that do not violate an applicable opacity limit is not a deviation from this permit. Failure to take response steps shall be considered a deviation from this permit.

(e) Nothing in this permit shall excuse the Permittee from complying with the requirements to operate a continuous opacity monitoring system pursuant to 326 IAC 3-5, (and 40 CFR 63).

Record Keeping and Reporting Requirements [326 IAC 2-7-5(3)] [326 IAC 2-7-19]

D.2.20 Record Keeping Requirements

(a) To document the compliance status with Condition D.2.19, the Permittee shall maintain records of the continuous opacity monitoring (COM) data in accordance with 326 IAC 3-5. Records shall be complete and sufficient to establish compliance with the limits established in this section. When the COM system is not functioning, the Permittee shall maintain records sufficient to demonstrate compliance D.2.21.

(b) To document the compliance status with Condition D.2.5, the Permittee shall maintain records in accordance with Section C - Sulfur Dioxide (SO_2) Record Keeping Requirements (Entire Source).

(c) To document the compliance status with Condition D.2.6, the Permittee shall maintain records of the natural gas usage for 12 month consecutive periods, with compliance demonstrated at the end of each month.

(d) To document the compliance status with Condition D.2.7(b) and D.2.7(c), the Permittee shall maintain a record of the dates the No. 5 Coke Oven Battery, the No. 7 Coke Oven Battery, and the Nos. 5 and 6 Quench Towers are each permanently shut down.

(e) To document the compliance status with Condition D.2.16, the Permittee shall maintain records of the once per day visible emissions notations of the stack exhausts. The Permittee shall include in its daily record when a visible emission notation is not taken and the reason for the lack of visible emission notation (e.g. the process did not operate that day).

(f) To document the compliance status with Condition D.2.17, the Permittee shall maintain records of the once per day pressure drop during normal operation. The Permittee shall include in its daily record when a pressure drop reading is not taken and the reason for the lack of pressure drop reading (e.g. the process did not operate that day).

(g) Section C - General Record Keeping Requirements contains the Permittee's obligations with regards to the records required by this condition.

D.2.21 Reporting Requirements

(a) A quarterly report of opacity exceedances shall be submitted not later than thirty (30) days after the end of the quarter being reported. Section C - General Reporting contains the Permittee’s obligation with regard to the reporting required by this condition.

(b) A quarterly summary report to document the compliance status with condition D.2.5 shall be submitted not later than thirty (30) days after the end of the quarter being reported. Section C – Sulfur Dioxide SO_2 Reporting Requirements (Entire Source) contains the Permittee's obligations with regards to the records required by this condition.

(c) A quarterly summary of the natural gas usage to document the compliance status with Condition D.2.6 shall be submitted not later than thirty (30) days after the end of the quarter being reported. Section C - General Reporting contains the Permittee’s obligation with regard to the reporting required by this condition.

SECTION D.3 FACILITY OPERATION CONDITIONS

Emission Unit Description: One (1) Coke Plant By-Product Recovery Plant

Coke Plant By-Product Recovery Plant

(a) Control Station No. 1

(1) Four (4) Predecanters D-101A, D-101B, D-101C and D-101D, identified as CBP10100, CBP20101, CBP30102 and CBP30103, constructed in 1975, with vapors directed by a natural gas blanketing system CB3080 to Control Station No. 1 and into the 72- inch Suction Main.

(2) Two (2) Still Decanters D-102B and D-102A, identified as CBD00104 and CBD00105, constructed in 1975, with vapors directed by a natural gas blanketing system CB3080 to Control Station 1 and into the 72-inch Suction Main.

(3) Two (2) Gary Decanters D-5 and D-4, identified as CBD20107 and CBD30108, constructed in 1975, with vapors directed by a natural gas blanket system CB3080 to Control Station No. 1 and into the 72-inch Suction Main.

(4) One (1) Bleed-Off Tank B101, identified as CBB10106, constructed in 1975, with vapors directed by a natural gas blanketing system CB3080 to Control Station No. 1 and into the 72 inch Suction Main.

(5) One (1) Liquor Storage Tank T-7, identified as CBL10109, constructed in 1975, with vapors directed by a natural gas blanketing system CB3080 to Control Station No. 1 into the 72-inch Suction Main.

(6) Two (2) Tar Storage Tanks T-2 and T-3, identified as CBT00110 and CBT00111, constructed in 1968, with vapors, directed by a natural gas blanketing system CB3080 to Control Station No. 1 and into the 72-inch Suction Main.

(7) One (1) Storage Tank T-6, identified as CBT20112, constructed in 1968, with vapors, directed by a natural gas blanketing system CB3080 to Control Station No. 1 and into the 72-inch Suction Main.

(8) Two (2) PC Tar Storage Tanks T-363D and T-363A, identified as CBT30113 and CB40114, constructed in 1975, with vapors directed by a natural gas blanketing system CB3080 to Control Station No. 1 into the 72-inch Suction Main.

(9) One (1) Dry Tar Storage Tank T-9, identified as CBT50115, constructed in 1975, with vapors directed by a natural gas blanketing system CB3080 to Control Station No. 1 and into the 72 inch Suction Main.

(10) One (1) Sump S-9 serving Dry Tar Storage Tank ST-9, identified as CBS10116, constructed in 1991, with vapors, directed by a natural gas blanketing system CB3080 to Control Station No. 1 and into the 72-inch Suction Main.

(b) Control Station No. 2

(1) Three (3) Tar Tanks T-304C, T-304B and T-304A , identified as CBT60118, CBT70119, and CBT80121, constructed in 1990, 1953 and 1953, respectively, with vapors directed by a natural gas blanketing system CB3081 to Control Station No. 2 and into the 72-inch Suction Main.

(2) One (1) Tar Feed Tank T-306C, identified as CBTF0164, constructed in 1953, with vapors directed by a natural gas blanketing system CB3081 to Control Station No. 2 and into the 72 inch Suction Main.

(3) One (1) Wash Oil Tank T-331AN, identified as CBO10123, constructed in 1961, with vapors directed by a natural gas blanketing system CB3081 to Control Station No. 2 into the 72-inch Suction Main.

(4) Two (2) Light Oil Storage Tanks T-312 and T-311, identified as CBO20124 and CBO30125, constructed in 1953, with vapors directed by a natural gas blanketing system CB3081 to Control Station No. 2 and into the 72-inch Suction Main.

(5) One (1) sump S-304/306, constructed in 1996, with vapors directed by a natural gas blanketing system CB3081 to Control Station No. 2 and into the 72-inch Suction Main.

(c) Control Station No. 3

(1) Four (4) Predecanters D-105A, D-105B, D-105C and D-105D, identified as CBP70137, CBP80138, CBP50139 and CBP60140, constructed in 1976, with vapors directed by a natural gas blanketing system CB3082 to Control Station No. 3 and into the 72-inch Suction Main.

(2) Two (2) Still Decanters D-106A and D-106B, identified as CBD60134 and CBD70136, constructed in 1976, with vapors directed by a natural gas blanketing system CB3082 to Control Station No. 3 and into the 72-inch Suction Main.

(3) Two (2) Gary Decanters D-6 and D-7, identified as CBD40132 and CBD50133, constructed in 1976, with vapors directed by a natural gas blanketing system CB3082 to Control Station No. 3 and into the 72-inch Suction Main.

(4) Two (2) Tar Decanters D-5/7N and D-5/7S, identified as CBD80141 and CBD90142, constructed in 1953, with vapors directed by a natural gas blanketing system CB3082 to Control Station No. 3 and into the 72-inch Suction Main.

(5) One (1) Bleed-Off Tank B-104, identified as CBB20135, constructed in 1976 with vapors directed by a natural gas blanketing system CB3082 to Control Station No. 3 and into the 72-inch Suction Main.

(6) One (1) Liquor Surge Tank T-11, identified as CBL60131, constructed in 1975, with vapors directed by a natural gas blanketing system CB3082 to Control Station No. 3 and into the 72-inch Suction Main.

(d) Control Station No. 4

(1) Four (4) Circulating Liquor Decanters L-100B, L-100C, L-100D and L-100E, identified as CBC30127, CBC40128, CBC50129 and CBL80145, constructed in 1975, with vapors directed by a natural gas blanketing system CB3083 to Control Station No. 4 and into the 72-inch Suction Main.

(2) Two (2) Liquor Surge Tanks T-340A and T-340B, identified as CBC20126 and CBL70143, constructed in 1995, with vapors directed by a natural gas blanketing system CB3083 to Control Station No. 4 and into the 72-inch Suction Main.

(3) One (1) Primary Cooler Tank T-345A, identified as CBTF0130, constructed in 1995, with vapors directed by a natural gas blanketing system CB3083 to Control Station No. 4 and into the 72-inch Suction Main.

(e) Control Station No. 5

(1) One (1) Sump of Circulating Liquor Ls-100E, identified as CBS40144, constructed in 1991, with vapors directed by a natural gas blanketing system CB3051 to Control Station No. 5 and into the 72-inch Suction Main.

(2) Three (3) Tar Storage Tanks T-301,T-302A, T-302B, identified as CBTA0146, CBTB0147 and CBTC0148, constructed in 1948, 1930 and 1930, respectively, with vapors directed by a natural gas blanketing system CB3051 to Control Station No. 5 and into the 72-inch Suction Main.

(3) Two (2) Storage Tanks T-7100, T7110 and T-7120, constructed and refurbished in 1997, with vapors directed by a natural gas blanketing system CB3051 to Control Station No. 5 and into the 72-inch Suction Main.

(4) Two (2) Oil/Tar Separator Tanks, T-7000 and T-7010, constructed in 1997, with vapors directed by a natural gas blanketing system CB3051 to Control Station No. 5 and into the 72-inch Suction Main.

(5) Two (2) Oil and Tar Receiver Tanks, T-7020 and T-7030, constructed in 1997, with vapors directed by a natural gas blanketing system CB3051 to Control Station No. 5 and into the 72-inch Suction Main.

(f) One (1) Surge Tank T-7800, constructed in 1997, with vapors directed to a nitrogen gas blanketing system.

(g) Distillation Sump Emission Control

One (1) Distillation Sump Emission Control System, identified as CBS80151, constructed in 1989, with vapors directed to a nitrogen gas blanketing system.

(h) Coke Oven Gas (COG) High Pressure Control System, constructed in 1991, contains instrumentation and control valves designed to limit the maximum pressure in the COG distribution system. Excess COG pressure is directed to and combusted in a bleeder flare with emissions exhausting to Stack CG6077.

(i) Equipment in Benzene Service consists of several hundred components: pumps, exhausters, valves, flanges and pressure relief devices in benzene service within the byproducts plant.

(The information describing the process contained in this facility description box is descriptive information and does not constitute enforceable conditions.)

Emission Limitations and Standards [326 IAC 2-7-5(1)]

D.3.1 Particulate Emissions Limitations [326 IAC 6.8-1-2(a)]

Pursuant to 326 IAC 6.8-1-2(a), the Permittee shall not allow or permit discharge to the atmosphere any gases which contain particulate matter in excess of 0.03 grain per dry standard cubic foot (dscf) from the Coke Oven Gas High Pressure Control System Stack CG6077.

SECTION D.4 FACILITY OPERATION CONDITIONS

Emission Unit Description: One (1) coke oven gas (COG) desulfurization facility

(a) One (1) amine unit, constructed in 1997, removes hydrogen sulfide and other organic sulfur compounds from the coke oven gas (COG) stream.

(b) One (1) reflux unit, constructed in 1997, recycles ammonia and acid gas into the COG stream.

(c) One (1) hydrogen cyanide (HCN) destruction unit, constructed in 1997 converts HCN in the acid gas stream to ammonia to minimize corrosion to the Sulfur Recovery Unit.

(d) One (1) sulfur recovery unit, constructed in 1997, converts sulfur compounds in the acid gas stream to elemental sulfur. This sulfur is sold as a product.

(e) One (1) incineration unit, constructed in 1997, converts remaining sulfur compounds not removed by the sulfur recovery unit into sulfur dioxide.

(The information describing the process contained in this facility description box is descriptive information and does not constitute enforceable conditions.)

Emission Limitations and Standards [326 IAC 2-7-5(1)]

D.4.1 Lake County PM_{10} Emission Requirements [326 IAC 6.8-2-38]

(a) Pursuant to 326 IAC 6.8-2-38, the PM_{10} emissions from the Coke Plant Desulfurization Facility Tail Gas Incinerator shall not exceed 0.13 pound per hour.

(b) Each emission limit applies to one (1) stack serving one (1) facility unless otherwise noted. The emissions limitations apply to one (1) stack serving the multiple units specified when the facility description notes stack serving, and to each stack of multiple stacks serving multiple facilities when the facility description notes each stack serving.

D.4.2 Sulfur Dioxide (SO_2) Emissions Limitations [326 IAC 7-4.1-20]

Pursuant to 326 IAC 7-4.1-20 the sulfur dioxide emissions from the desulfurization plant shall be as follows:

(a) Pursuant to 326 IAC 7-4.1-20(a)(1)(H), when the coke oven gas desulfurization facility is not operating, sulfur dioxide from the Coke Oven Gas Tail Gas Incinerator stack shall not exceed 22.0 pounds per hour.

(b) Pursuant to 326 IAC 7-4.1-20(b)(8), when the coke oven gas desulfurization facility is operating sulfur dioxide emissions from the Coke Oven Gas Tail Gas Incinerator stack shall not exceed 295 pounds per hour.

(c) Pursuant to 326 IAC 7-4.1-20(c)(4), the Coke Oven Gas Desulfurization Plant's down time shall not exceed nine hundred fifty (950) hours per year.

Record Keeping and Reporting Requirements [326 IAC 2-7-5(3)] [326 IAC 2-7-19]

D.4.3 Record Keeping Requirements

(a) To document the compliance status with Condition D.4.2, the Permittee shall maintain records of the downtime hours of the Coke Oven Gas Desulfurization Plant.

(b) Section C - General Record Keeping Requirements contains the Permittee's obligations with regard to the records required by this condition.

D.4.4 Reporting Requirements

A quarterly summery report to document compliance with Condition D.4.2 shall be submitted not later than thirty (30) days after the end of the quarter being reported. Section C - Sulfur Dioxide SO_2 Reporting Requirements (Entire Source) contains the Permittee's obligation with regard to the reporting required by this condition. The report submitted by the Permittee does require a certification that meets the requirements of 326 IAC 2-7-6(1) by a “responsible official” as defined by 326 IAC 2-7-1(35).

SECTION D.5 FACILITY OPERATION CONDITIONS

Emission Unit Description: One (1) No. 2 Coke Plant Boiler House

(a) Two (2) Boilers, Nos. 1 and 2, identified as CSS10155 and CSS20156, constructed prior to 1970, with a maximum heat input capacity of 160 MMBtu per hour each, exhausting to stack CS6061. These boilers are equipped to combust natural gas.

(b) One (1) Boiler, No. 3, identified as CSS30157, constructed in 1943, with a maximum heat input capacity of 160 MMBtu per hour, exhausting to stack CS6062. This boiler is equipped to combust natural gas and coke oven gas.

(c) Two (2) Boilers, Nos. 4 and 5, identified as CSS40158 and CSS50159, constructed prior to 1955, with a maximum heat input of 170 MMBtu per hour each, exhausting to stack CS6063. These boilers are equipped to combust natural gas and coke oven gas.

(d) One (1) Boiler No. 6, identified as CSS60160, constructed in 1955, with a maximum heat input capacity of 170 MMBtu per hour, exhausting to stack CS6064. This boiler is equipped to combust natural gas and coke oven gas.

(e) One (1) Boiler, No. 7, identified as CS70161, constructed in 1976, with a maximum heat input capacity of 170 MMBtu per hour, exhausting to stack CS6065. This boiler is equipped to combust natural gas and coke oven gas.

(f) One (1) Boiler, No. 8, identified as CSS80162, constructed in 1981, with a maximum heat input capacity of 249 MMBtu per hour, exhausting to stack CS6066. This boiler is equipped to combust natural gas and coke oven gas.

(g) Two (2) boilers at the coke plant boiler house, identified as Boilers No. 9 CSS80164 and No. 10 CSS 80165, constructed in 2004, each with a maximum heat input capacity of 235 MMBtu/hr, exhausting to stacks CS6067 and CS6068, respectively. These boilers are equipped to burn natural gas and coke oven gas.

(h) One (1) lime storage silo with a maximum capacity of 20 tons per hour and emissions controlled by a baghouse LRS-1, constructed in 2001, exhausting inside the building.

(The information describing the process contained in this facility description box is descriptive information and does not constitute enforceable conditions.)

Emission Limitations and Standards [326 IAC 2-7-5(1)]

D.5.1 Lake County PM_{10} Emission Requirements [326 IAC 6.8-2-38] [326 IAC 6.8-1-2(b)]

Pursuant to 326 IAC 6.8-2-38 the PM_{10} emissions from the Boilers Nos. 1 and 2, CSS10155 and CSS20156, Boiler No. 3, CSS60157, Boiler No. 4, CSS40158, Boiler No. 5, CSS50159, Boiler No. 6, CSS60160, Boiler No. 7, CSS70161 and Boiler No. 8, CSS80162 shall comply with the following:

(a) The PM_{10} emissions from the Coke Plant Boiler House Boilers Nos. 1 and 2 stacks CS6060 and CS6061 shall not exceed 0.003 pounds per MMBtu heat input each and a total of 0.75 pound per hour.

(b) The PM_{10} emissions from the Coke Plant Boiler House Boiler No. 3 stack CS6062 shall not exceed 0.012 pound per MMBtu of heat input and 1.8 pounds per hour.

(c) The PM_{10} emissions from the Coke Plant Boiler House Boilers No. 4 and No. 5 stack CS6063 shall not exceed 0.012 pound per MMBtu of heat input each and a total of 3.9 pounds per hour.

(d) The PM_{10} emissions from the Coke Plant Boiler House Boiler No. 6 stack CS6064 shall not exceed 0.012 pound per MMBtu of heat input and 2.0 pounds per hour.

(e) The PM_{10} emissions from the Coke Plant Boiler House Boiler No. 7 Stack CS6065 shall not exceed 0.012 pound per MMBtu of heat input and 1.9 pounds per hour.

(f) The PM_{10} emissions from the Coke Plant Boiler House Boiler No. 8 Stack CS6066 shall not exceed 0.012 pound per MMBtu of heat input and 2.9 pounds per hour.

(g) The PM_{10} emissions from the Coke Plant Boiler House Lime Storage Silo Baghouse LRS-1 shall not exceed 0.030 grain per dry standard cubic foot and 0.28 pound per hour.

(h) Each emission limit applies to one (1) stack serving one (1) facility unless otherwise noted. The emissions limitations apply to one (1) stack serving the multiple units specified when the facility description notes stack serving, and to each stack of multiple stacks serving multiple facilities when the facility description notes each stack serving.

(i) Pursuant to Significant Source Modification 089-19678-00121, issued October 29, 2004 and 326 IAC 6.8-1-2(b) (Particulate Matter Limitations for Lake County), particulate matter (PM) from each of the boilers No. 9, No. 10 and the temporary rental boiler shall not exceed 0.01 grains per dry standard cubic foot (gr/dscf) of exhaust air.

D.5.2 Sulfur Dioxide (SO_2) Limitations [326 IAC 7-4.1-20]

Pursuant to 326 IAC 7-4-1-20, the SO_2 emissions from the Boilers: Boiler No. 1 CSS10155, Boiler No. 2 CSS20156, Boiler No. 3 Stack CS6062, Boiler No. 4 and 5 Stack CS6063, Boiler No. 6 Stack CS6064, Boiler No. 7 Stack CS6065 and Boiler No. 8 Stack CS6066 shall comply with the following limitations:

(a) Pursuant to 326 IAC 7-4.1-20(a)(1)(C), (a)(2)(B) and (a)(2)(C), when the coke oven gas desulfurization facility is not operating during the following periods,

Months	Boilers	Emission Limit (lbs/MMBtu)	Emission Limit (lbs/hr)
Jan - Dec	Boiler No. 8	1.27	316.2
Jan - Dec	Boiler No. 9	1.27	298.45
Jan - Dec	Boiler No. 10	1.27	298.45
Jan - Apr	Boiler Nos. 4 & 5.	0.444	150.0 total
May - Oct	Boiler Nos. 4 & 5.	0.385	130.0 total
Nov - Dec	Boiler Nos. 4 & 5.	0.000	0.0 total
Jan - Apr	Boiler No. 6	1.27	214.6
May - Oct	Boiler No. 6	1.27	214.6
Nov - Dec	Boiler No. 6	1.18	200.0

(b) Pursuant to 326 IAC 7-4.1-20(b)(3), when the coke oven gas desulfurization facility is operating.

Boilers	Emission Limit (lbs/MMBtu)	Emission Limit (lbs/hr)
Boiler No. 3	0.260	40.6
Boilers Nos. 4 and 5	0.260	87.9 total
Boiler No. 6	0.260	44.0

Boilers	Emission Limit (lbs/MMBtu)	Emission Limit (lbs/hr)
Boiler No. 7	0.260	42.1
Boiler No. 8	0.260	64.7
Boiler No. 9	0.260	61.10
Boiler No. 10	0.260	61.10

D.5.3 Nonattainment NSR Minor Limits [326 IAC 2-1.1-5]

Pursuant to Significant Source Modification 089-19678-00121, issued October 29, 2004 and in order to make the requirements of 326 IAC 2-1.1-5 Nonattainment NSR not applicable, the Permittee shall comply with the following:

(a) The NO_X emissions from each boiler No. 1 through 8 shall not exceed 280 pounds per million cubic feet (MMCF) of natural gas. (This is the NO_X emission factor in AP-42, Table 1.4-1 for uncontrolled boilers.)

(b) The NO_X emissions from each of the boilers No. 9 and No. 10 shall not exceed 129 pounds per million cubic feet (MMCF) of natural gas.

(c) The total NO_X emissions from boilers No. 1 through No. 10 at the coke plant boiler house (CPBH) shall be limited to less than 64.6 tons per twelve (12) consecutive month period with compliance determined at the end of each month. The monthly NO_X emissions shall be calculated using the following equation:

NO_X Emissions (tons/month) = (280 X + 129 Z) / 2,000

Where:

X = total monthly natural gas usage in boilers No. 1 through No. 8 (MMCF/month)
Z = total monthly natural gas usage in boilers No. 9 and No. 10 (MMCF/month)

This limitation ensures the net NO_X emission increase from the modification to add Boilers No. 9 and No. 10 shall be less than 40 tons/yr and the requirements of 326 IAC 2-1.1-5 (Nonattainment NSR) are not applicable.

D.5.4 PSD Minor Limits [326 IAC 2-2]

Pursuant to Significant Source Modification 089-19678-00121, issued October 29, 2004 and in order to make the requirements of 326 IAC 2-2 (PSD) not applicable, the Permittee shall limit the total natural gas usage from boilers No. 1 though No. 10 to less than 2,550 MMCF per twelve (12) consecutive month period with compliance determined at the end of each month.

This is equivalent to 9.69 tons/yr of PM_{10} emissions and 107 tons/yr of CO emissions from boilers No. 1 through No. 10. The net emission increases from this modification are limited to less than 15 tons/yr for PM_{10} and less than 100 tons/yr for CO. Therefore, the requirements of 326 IAC 2-2 (PSD) is not applicable.

Compliance Determination Requirements

D.5.5 Testing Requirements [326 IAC 2-7-6(1),(6)] [326 IAC 2-1.1-11] [326 IAC 2-1.1-5]

Within 2.5 years after the most recent valid compliance demonstration, the Permittee shall perform NO_X testing for boilers No. 9 and No. 10, for the purpose of determining compliance with Condition D.5.3, utilizing methods as approved by the Commissioner. Testing shall be conducted in accordance with the provisions of 326 IAC 3-6 (Source Sampling Procedures). Section C - Performance Testing contains the Permittee's obligation with regard to the performance testing

required by this condition. Pursuant to 40 CFR 60.46b(e), the performance test requirements may be satisfied by using 30 day average emission rate data from NO_X CEMs.

D.5.6 Sulfur Fuel Sampling and Analysis [326 IAC 7-4.1-2]

To demonstrate compliance with condition D.5.2, the Permittee shall perform Sulfur Fuel Sampling and Analysis. Section C - Sulfur Fuel Sampling and Analysis contains the Permittee's obligation with regard to the sampling and analysis required by this condition.

D.5.7 Particulate Matter Control

The lime storage silo baghouse shall be in operation and control particulate emissions at all times the silo is pneumatically loaded.

Compliance Monitoring Requirements [326 IAC 2-7-6(1)] [326 IAC 2-7-5(1)]

D.5.8 Continuous Emissions Monitoring [326 IAC 3-5] [326 IAC 2-7-6(1),(6)]

In order to demonstrate compliance with condition D.5.3(c), the Permittee shall install, calibrate, certify, maintain and operate a continuous monitoring system for Boilers No. 9 and No. 10 for measuring NO_X emissions discharged to the atmosphere. The continuous monitoring system shall meet the performance specifications of 326 IAC 3-5-2 and 326 IAC 3-5-3. 326 IAC 3-5 is not federally enforceable.

Record Keeping and Reporting Requirement [326 IAC 2-7-5(3)] [326 IAC 2-7-19]

D.5.9 Record Keeping Requirements

(a) To document the compliance status with Condition D.5.3(b), the Permittee shall maintain records of the NO_X continuous emission monitoring data in accordance with 326 IAC 3-5.

(b) To document the compliance status with Condition D.5.3(d), the Permittee shall maintain monthly records of the following:

(1) total natural gas usage for boilers No. 1 through No. 8;

(2) total natural gas usage for boilers No. 9 and No. 10; and

(4) calculated NO_X emissions using the equation listed in Condition D.5.3(d).

(c) To document the compliance status with Condition D.5.4, the Permittee shall maintain monthly records of the total natural gas usage for boilers No. 1 through No. 10.

(d) To document the compliance status with Condition D.5.2, the Permittee shall maintain records in accordance with Section C - Sulfur Dioxide (SO_2) Record Keeping Requirements (Entire Source).

(e) Section C - General Record Keeping Requirements contains the Permittee's obligations with regard to the records required by this condition.

D.5.10 Reporting Requirements

(a) A quarterly summary report to document compliance with condition D.5.2 shall be submitted not later than thirty (30) days after the end of the quarter being reported. Section C – Sulfur Dioxide Reporting Requirements (Entire Source) contains the Permittee's obligation with regard to the reporting required by this condition.

(b) A quarterly summary of the information to document compliance with Conditions D.5.3(d) and D.5.4 shall be submitted not later than thirty (30) days after the end of the quarter being reported.

(c) The report submitted by the Permittee does require a certification that meets the requirements of 326 IAC 2-7-6(1) by a "responsible official" as defined by 326 IAC 2-7-1(35). Section C - General Reporting contains the Permittee's obligation with regard to the reporting required by this condition.

SECTION D.6 FACILITY OPERATION CONDITIONS

Emission Unit Description: One (1) Number 3 Sinter Plant

(a) Three (3) Sinter Strands, constructed in 1958 , identified as ISS10379, ISS20380 and ISS30381, each with 50 MMBtu per hour reheat burners combusting natural gas and coke oven gas identified as ISB001, ISB002 and ISB003 and a maximum capacity of 225 tons of sinter per hour each, each with ignition hood burners with a combined heat input of 50 MMBtu/hr combusting natural gas and coke oven gas, controlled by two (2) Windbox Gas Cleaning Systems IS3203 and IS3204, installed in 1996, each comprised of a Quench Reactor, Dry Venturi Scrubber, a baghouse operated in series, exhausting to Windbox stacks IS6198 and IS6199 which are equipped with VOC CEMS.

(b) One (1) Cold Screen Station, identified as ISR00389, constructed in 1958, with a maximum capacity of 450 tons per hour, using a Baghouse IS3209 as a control device and exhausting to stack IS6207.

(c) One (1) S1/S2 Conveyer System, identified as ISY00388, constructed in 1979, with a maximum capacity of 450 tons per hour, that transfers sinter from the sinter coolers to the cold screening station, using a baghouse IS3208 as a control device and exhausting to stack IS6206.

(d) Three (3) Sinter Coolers, identified as ISC10385, ISC20386, and ISC30387, constructed in 1958, with a maximum capacity of 225 ton per hour each, with emissions exhausting to stacks IS6203, IS6204, and IS6205 respectively.

(e) Three (3) Sinter Strand Discharge End Areas, identified as ISS10379, ISS20380 and ISS0381, constructed in 1958, using three (3) baghouses as control devices, designated as IS3205, IS3206, and IS3207, exhausting to stacks IS6200, IS6201, and IS6202 respectively.

(f) Blended Material Storage Bin Building, identified as ISB00377, constructed in 1979, including bins, feeders and conveyors, with a maximum capacity of 1,000 tons per hour, using a Baghouse IS3196 as a control device and exhausting to stack IS6197.

(g) Storage and Blending Piles, identified as ISBP0376, with fugitive emissions.

(The information describing the process contained in this facility description box is descriptive information and does not constitute enforceable conditions.)

Emission Limitations and Standards [326 IAC 2-7-5(1)]

D.6.1 Particulate Emissions Offset [326 IAC 2-3]

Pursuant to the significant source modification 089-12880-00121, issued July 26, 2001, the natural gas usage shall be less than 95.5 million standard cubic feet (MMSCF) or the coke oven gas usage shall be less than 1,637.4 MMSCF in the No. 3 Sinter Plant Sinter Strand Windbox reheat burners ISB001, ISB002 and ISB003 per 12-consecutive month period, with compliance demonstrated at the end of each month. Compliance with this limit makes 326 IAC 2-3 (Emissions Offset) not applicable.

D.6.2 Lake County PM_{10} Emission Requirements [326 IAC 6.8-2-38]

Pursuant to 326 IAC 6.8-2-38, PM_{10} emissions from the No. 3 Sinter Plant shall comply with the following:

(a) The PM_{10} emissions from the No. 3 Sinter Plant Strand Windbox gas cleaning system stacks IS6198 and IS6199 emissions shall not exceed 0.020 grains per dry standard cubic foot and a total of 200.0 pounds per hour.

(b) The PM_{10} emissions from the No. 3 Sinter Plant Cold Screen Station Baghouse Stack IS6207 shall not exceed 0.0100 grains per dry standard cubic foot and 10.89 pounds per hour.

(c) The PM_{10} emissions from the No. 3 Sinter Plant S1/S2 Conveyor System Baghouse Stack IS6206 shall not exceed 0.0100 grains per dry standard cubic foot and 1.29 pounds per hour.

(d) The PM_{10} emissions from the No. 3 Sinter Plant Sinter Coolers Stacks IS6203, IS6204 and IS6205 shall not exceed 0.0300 grains per dry standard cubic foot and a total of 272.57 pounds per hour.

(e) The PM_{10} emissions from the No. 3 Sinter Plant Discharge Ends Area Baghouse Stacks IS6200, IS6201 and IS6202 shall not exceed 0.0100 grain per dry standard cubic foot and total of 20.57 pounds per hour.

(f) The PM_{10} emissions from the No. 3 Sinter Plant Blended Material Storage Bins Building Baghouse Stack IS6197 shall not exceed 0.0100 grain per dry standard cubic foot and 0.43 pounds per hour.

(g) Each emission limit applies to one (1) stack serving one (1) facility unless otherwise noted. The emissions limitations apply to one (1) stack serving the multiple units specified when the facility description notes stack serving, and to each stack of multiple stacks serving multiple facilities when the facility description notes each stack serving.

D.6.3 Sulfur Dioxide (SO_2) Limitations [326 IAC 7-4.1-20]

Pursuant to 326 IAC 7-4.1-20 the SO_2 emissions from the Sinter Plant Windbox gas cleaning systems stacks IS6198 and IS6199 shall not exceed the following:

(a) Pursuant to 326 IAC 7-4.1-20(a)(1)(G), the SO_2 emissions from the Sinter Plant Windbox gas cleaning systems stacks IS6198 and IS6199 shall not exceed a total of 260.0 pounds per hour when the coke oven gas desulfurization plant is not in operation.

(b) Pursuant to 326 IAC 7-4.1-20(b)(7), the SO_2 emissions from the Sinter Plant Windbox gas cleaning systems stacks IS6198 and IS6199 shall not exceed a total of 200.0 pounds per hour when the coke oven gas desulfurization plant is in operation.

D.6.4 Volatile Organic Compounds (VOC) Limitations [326 IAC 8-13-3]

Pursuant to 326 IAC 8-13-3(b) and (c), the No. 3 Sinter Plant windbox gas cleaning system stacks (IS6198 and IS6199) shall not exceed the VOC emission limits as follows:

(a) During the period May 1 through September 30, the total VOC emissions (the seasonal cap) shall not exceed 256,948 pounds of VOC emissions. This is based on the following equation:

VOC (pounds) = 0.25 lb of VOC per ton of sinter produced x average daily sinter production rate of 6717.59 tons per day x 153 days

(b) Except as provided in 326 IAC 8-13-3(b)(3), on any day from May 1 through September 30, the sinter plant windbox exhaust VOC emissions (the maximum daily limit) shall not exceed 2,096 pounds of VOC emissions. This is based on the following equation:

VOC (pounds per day) = 0.25 lb of VOC per ton of sinter produced x maximum actual daily sinter production rate 8384 tons per day

(c) On any day from May 1 through September 30 when ozone levels in Lake, Porter, or LaPorte Counties are expected to exceed the national ambient air quality standard for ozone (either one (1) hour or eight (8) hour), the sinter plant windbox exhaust VOC emissions (the lower daily limit) shall not exceed 1,679 pounds of VOC emissions. This is based on the following equation:

VOC (pounds per day) = 0.25 lb of VOC per ton of sinter produced x maximum actual daily sinter production rate of 6716 tons per day

A high ozone level day shall be predicted in accordance with item (g)(4) of this condition.

(d) The maximum actual daily sinter production (tons per day) is equal to the maximum actual sinter produced on an operating day during the period from 1990 to 1997.

(e) The average daily sinter production equals either of the following:

(1) The annual average sinter production in tons divided by the annual average number of operating days in the period 1990 through 1994.

(2) In the event sinter production in 1990 to 1994 is not representative of the current sinter production due to factors, such as, but not limited to, routine repair, maintenance, or replacement, a source may elect to use the average actual sinter production in tons per day during a calendar year up to the year 1997, which represents current sinter production. The averaging period must include and not be less than the ozone season (May 1 through September 30).

(f) From October 1 through April 30, sinter plant windbox exhaust gas VOC emissions shall be limited to thirty-six hundredths (0.36) pound per ton of sinter produced. The limit shall be complied with on an operating day average basis.

(g) Pursuant to 326 IAC 8-13-4(b)(8) and an Ozone Action Plan dated August 2, 1999, the Permittee shall do the following:

(1) Control the sinter burden oil and grease content by regulating the amount of mill scale in the sinter burden.

(2) Use a continuous emissions monitoring system to ensure compliance with the applicable limits.

(3) Implement the following sequence of events upon discovery and initial internal notification of an actual or projected VOC emission limit, exceedance.

(A) Verify the exceedance.

(B) Determine the exceedance status: ceased or on-going.

(C) Implement corrective measures if a verified on-going exceedance condition exists. The feed rate of mill scale to the sinter burden from the dedicated mill scale bin is reduced or terminated. Incremental reductions in the mill scale feed rate may be utilized.

(4) To predict high ozone days: the Permittee is a participant in IDEM's Partners for Clean Air Program and receives notification of Ozone Action Days from IDEM -

OAQ. The Permittee will initiate the ozone action plan. A high ozone level day shall be predicted by the Permittee by using notification from IDEM, OAQ of an ozone action day.

Compliance Determination Requirements

D.6.5 Testing Requirements [326 IAC 2-7-6(1),(6)][326 IAC 2-1.1-11]

(a) Within 2.5 years after the most recent valid compliance demonstration, the Permittee shall perform simultaneous sampling and analysis of both non-condensable (front half) and condensable (back half) PM_{10} on Sinter Plant Windbox Gas Cleaning Systems Stacks IS6198 and IS6199 for the purpose of determining compliance with Condition D.6.2(a), utilizing methods approved by the Commissioner. This test shall be repeated at least once every 2.5 years from the date of the most recent valid compliance demonstration.

(b) Within 2.5 years after the most recent valid compliance demonstration, the Permittee shall perform PM_{10} testing on the Discharge Ends Area Baghouse Stacks IS6200, IS6201 and IS6202 for the purpose of determining compliance with Condition D.6.2(e), utilizing methods approved by the Commissioner. This test shall be repeated at least once every 2.5 years from the date of the most recent valid compliance demonstration.

(c) Within 2.5 years after the most recent valid compliance demonstration, the Permittee shall perform PM_{10} testing of the three (3) Sinter Coolers Stacks IS6203, IS6204 and IS6205 for the purpose of determining compliance with Condition D.6.2(d), utilizing methods approved by the Commissioner. This test shall be repeated at least once every 2.5 years from the date of the most recent valid compliance demonstration.

(d) Within 2.5 years after the most recent valid compliance demonstration, the Permittee shall perform SO_2 testing on Sinter Windbox Gas Cleaning Systems Stacks IS6198 and IS6199 for the purpose of determining compliance with Condition D.6.3, utilizing methods approved by the Commissioner. This test shall be repeated at least once every 2.5 years from the date of the most recent valid compliance demonstration.

(e) Testing shall be conducted in accordance with the provisions of 326 IAC 3-6 (Source Sampling Procedures). Section C - Performance Testing contains the Permittee's obligation with regard to the performance testing required by this condition.

D.6.6 Particulate Matter Control

(a) Except as otherwise provided by statue, rule or this permit the control devices as listed in (1) through (5) below shall be in operation at all times the associated processes are in operation to control particulate emissions.

(1) Sinter Plant Windbox Gas Cleaning System each comprised of a Quench Reactor, Dry Venturi Scrubber, and a Baghouse in series, identified as emission units IS3203 and IS3204, shall be in operation at all times when the No. 3 Sinter Plant Sinter Windbox is in operation.

(2) The Cold Screen Station Baghouse, identified as control device IS3209, shall be in operation at all times when the No. 3 Sinter Plant Cold Screen Station is in operation.

(3) The S1/S2 Conveyor System Baghouse, identified as control device IS3208, shall be in operation at all times material is conveyed by the No. 3 Sinter Plant S1/S2 conveyor system.

(4) The Sinter Strand Discharge Ends Area Baghouses, identified as control devices IS3205, IS3206, IS3207, shall be in operation at all times when the associated No. 3 Sinter Plant Sinter Strand Discharge Ends Area and Sinter Coolers are in operation.

(5) The Blended Material Storage Bins Baghouse, identified as control device IS3196, shall be in operation at all times when material is being transferred in the building.

(b) In the event that bag failure is observed in a multi-compartment baghouse, if operations will continue for ten (10) days or more after the failure is observed before the failed units will be repaired or replaced, the Permittee shall promptly notify the IDEM, OAQ of the expected date the failed units will be repaired or replaced. The notification shall also include the status of the applicable compliance monitoring parameters with respect to normal, and the results of any response actions taken up to the time of notification.

Compliance Monitoring Requirements [326 IAC 2-7-6(1)][326 IAC 2-7-5(1)]

D.6.7 Visible Emissions Notations

(a) Visible emission notations of the Sinter Strand Windbox Gas Cleaning System stacks IS6198 and IS6199, Cold Screen Station Stack IS6207, Sinter Cooler Stacks IS6203, IS6204 and IS6205 and Discharge Ends Area Stacks IS6200, IS6201 and IS6202, shall be performed once per day during normal daylight operations when the No. 3 Sinter Plant Sinter Strand Windbox Gas Cleaning System, Cold Screen Station, Sinter Coolers and Discharge Ends Area are in operation. A trained employee shall record whether emissions are normal or abnormal.

(b) For processes operated continuously, "normal" means those conditions prevailing, or expected to prevail, eighty percent (80%) of the time the process is in operation, not counting startup or shut down time.

(c) In the case of batch or discontinuous operations, readings shall be taken during that part of the operation that would normally be expected to cause the greatest emissions.

(d) A trained employee is an employee who has worked at the plant at least one (1) month and has been trained in the appearance and characteristics of normal visible emissions for that specific process.

(e) If abnormal emissions are observed, the Permittee shall take a reasonable response. Section C - Response to Excursions or Exceedances contains the Permittee’s obligation with regard to the reasonable response steps required by this condition. Failure to take response steps shall be considered a deviation of this permit.

(f) The Permittee shall comply with the most current Continuous Compliance Plan visible emission evaluation program. Section C - Continuous Compliance Plan contains the Permittee's obligation with regard to the visible emission evaluation program required by this condition.

D.6.8 Parametric Monitoring

(a) The Permittee shall record the pressure drop and liquid reagent flow rate of the dry venturi scrubbers used in conjunction with the No. 3 Sinter Plant Sinter Strand Windbox Gas Cleaning Systems at least once per day when the No. 3 Sinter Plant Sinter Strand Windbox units are in operation. When for any one reading, the pressure drop or flow rate across the scrubbers is outside the normal range, the Permittee shall take a reasonable response. The normal range for this unit is a range of 3 to 8 inches of water and the normal flow rate of the scrubber is 400 to 600 gallons per minute (gpm) unless a different

upper-bound or lower-bound value for these ranges is determined during the latest stack test. Section C - Response to Excursions or Exceedances contains the Permittee's obligation with regard to the reasonable response steps required by this condition. A pressure drop or flow rate that is outside the above mentioned ranges is not a deviation from this permit. Failure to take response steps shall be considered a deviation of this permit.

(b) The Permittee shall record the pressure drop of the baghouse used in conjunction with the No. 3 Sinter Plant Discharge Ends Area at least once per day when the No. 3 Sinter Plant Discharge Ends Area is in operation. When for any one reading, the pressure drop across the baghouse is outside the range, the Permittee shall take a reasonable response. The normal range for this unit is a pressure drop between 3 and 8 inches of water unless a different upper-bound or lower-bound value for this range is determined during the latest stack test. Section C - Response to Excursions or Exceedances contains the Permittee's obligation with regard to the reasonable response steps required by this condition. A pressure reading that is outside the above mentioned range is not a deviation from this permit. Failure to take response shall be considered a deviation of this permit.

(c) The Permittee shall record the pressure drop of the baghouse used in conjunction with the No. 3 Sinter Plant Cold Screen Station at least once per day when the No. 3 Sinter Plant Cold Screen Station is in operation. When for any one reading, the pressure drop across the baghouse is outside the range the Permittee shall take a reasonable response. The normal range for this unit is a pressure drop between 3 and 8 inches of water unless a different upper-bound or lower-bound value for this range is determined during the latest stack test. Section C - Response to Excursions or Exceedances contains the Permittee's obligation with regard to the reasonable response steps required by this condition. A pressure reading that is outside the above mentioned range is not a deviation from this permit. Failure to take response steps shall be considered a deviation of this permit.

(d) The Permittee shall comply with the most current Continuous Compliance Plan for the baghouse operation, recording and maintenance. Section C - Continuous Compliance Plan contains the Permittee's obligation with regards to the baghouse operation, recording and maintenance required by this condition.

(e) The instruments used for determining the pressure drop and flow rate shall comply with Section C - Instrument Specifications, of this permit, shall be subject to approval by IDEM, OAQ and shall be calibrated or replaced at least once every six (6) months or other time period specified by the manufacturer. The Permittee shall maintain records of the manufacturer specifications, if used.

D.6.9 Scrubber Failure Detection

In the event, a scrubber failure has been observed:

Failed units and the associated process will be shut down immediately until the failed units have been repaired or replaced. Operations may continue only if the event qualifies as an emergency and the Permittee satisfies the requirements of the emergency provisions of this permit (Section C - Emergency Provisions).

D.6.10 Continuous Emissions Monitoring (VOC)[326 IAC 8-13-8][326 IAC 3-5]

The Permittee shall operate the continuous emissions monitoring system (CEMS) for the measurement of VOC emissions discharged into the atmosphere from the No. 3 Sinter Plant Sinter Windbox gas cleaning system stacks IS6198 and IS6199, in accordance with 326 IAC 8-13-8, and 326 IAC 3-5.

(a) The continuous emissions monitoring system (CEMS) shall measure VOC emission rate in pounds per hour.

(b) The Permittee shall demonstrate compliance with Condition D.6.4 utilizing data from the VOC CEMS and 326 IAC 8-13-3(b) calculations.

(c) The Permittee shall follow the maintenance, operating procedures, quality assurance procedures and performance specifications for the VOC CEMs in 326 IAC 3-5.

(d) In the event of an exceedance of VOC emissions, the Permittee shall implement the corrective action plan requirements in 326 IAC 8-13-4(b)(5).

D.6.11 VOC Monitoring Downtime [326 IAC 2-7-6] [326 IAC 2-7-5(3)]

Whenever the VOC continuous emission monitoring system is malfunctioning or down for repairs or adjustments for more than four (4) hours, the following method shall be used to provide information related to VOC emissions:

(a) The Permittee shall not include additional oily scale in the sinter plant burden raw materials, and

(b) Sample and analyze the sinter burden blend for oil and grease utilizing the methods and calculations in 326 IAC 8-13-5(d).

Record Keeping and Reporting Requirements [326 IAC 2-7-5(3)] [326 IAC 2-7-19]

D.6.12 Record Keeping Requirements

(a) To document the compliance status with Condition D.6.1 and pursuant to Significant Source Modification 089-12880-00121, issued on July 26, 2001, the Permittee shall maintain records of the Coke oven gas and natural gas usage in the No. 3 Sinter Plant Strand Windbox gas reheat burners ISB001, ISB002 and ISB003.

(b) To document the compliance status with Condition D.6.3, the Permittee shall maintain records in accordance with Section C – Sulfur Dioxide (SO_2) Record Keeping (Entire Source).

(c) To document the compliance status with Condition D.6.4, the Permittee shall maintain the following records:

(1) Records of the VOC emissions monitoring data for the period May 1 through September 30, as follows:

(A) The VOC emitted each day.

(B) The cumulative total of VOC emitted.

(C) The sinter produced each operating day.

(2) Maintain records of the VOC continuous emissions monitor system (CEMS) as required in 326 IAC 3-5.

(d) To document the compliance status with Condition D.6.7 the Permittee shall maintain records of once per day visible emission notations of the Sinter Cooler Stacks IS6203, IS6204 and IS6205 exhausts. The Permittee shall include in its daily record when a visible emission notation is not taken and the reason for the lack of visible emission notation (e.g. the process did not operate that day).

(e) To document the compliance status with Condition D.6.8 the Permittee shall maintain the records of the Sinter Plant Windbox Gas Cleaning system pressure drop across the baghouse; pressure drop and flow rate of the Sinter Plant Windbox Gas Cleaning Scrubbers; pressure drop across the Cold Screen Station Baghouse and pressure drop across the Discharge Ends Area baghouse during normal operation on at least a once per day basis. The Permittee shall include in its daily record when a pressure drop reading is not taken and the reason for the lack of pressure drop reading (e.g. the process did not operate that day).

(f) Section C - General Record Keeping Requirements contains the Permittee's obligations with regard to the records required by this condition.

D.6.13 Reporting Requirements

(a) Pursuant to Significant Source modification 089-12880-00121, a quarterly summary of the natural gas and coke oven gas usage at the No. 3 Sinter Plant Sinter Strands Windbox recirculating burners per 12-consecutive month period with compliance demonstrated at the end of each month to document the compliance status with Conditions D.6.1, shall be submitted not later than thirty (30) days after the end of the quarter being reported.

(b) Pursuant to 326 IAC 8-13-8(a)(3), reports to document the compliance status with Condition D.6.4, shall be as follows:

(1) For VOC Continuous Emissions Monitoring System (CEMS), the following reports shall be submitted:

(A) A report shall be submitted within thirty (30) days of an exceedance of VOC emission limits in D.6.4 containing the following information:

(i) The name and location of the source.

(ii) The nature of the exceedance.

(iii) The date of the occurrence.

(iv) The cause of the exceedance, such as, but not limited to, production rates or characteristics of the sinter burden.

(v) The corrective action taken according to the corrective action plan in 326 IAC 8-13-4(b)(5).

(B) Submit the CEM certification reports according to the procedures and schedule in 326 IAC 3-5.

(c) A quarterly summary report to document the compliance status with condition D.6.3 shall be not later than thirty (30) days after the end of the quarter being reported. Section C – Sulfur Dioxide (SO_2) Reporting Requirements (Entire Source) contains the Permittee's obligation with regard to the reporting required by this condition.

(d) The reports submitted by the Permittee do require a certification that meets the requirements of 326 IAC 2-7-6(1) by a "responsible official" as defined by 326 IAC 2-7-1(35).

Section D.7 **Facility Operation Conditions**

Emission Unit Description: Four (4) Blast Furnaces, designated as Blast Furnace No. 4, Blast Furnace No. 6, Blast Furnace No. 8 and Blast Furnace No. 14

(a) Raw materials shipped to the ore yard identified as IAOYO366, are transferred to the Highline, identified as IAHL0307, from which raw material shipments and coke are sent through the Stockhouse.

(b) The No. 14 Blast Furnace Stockhouse, constructed in 1979, modified in 2009 with the addition of a baghouse for particulate control, identified Blast Furnace No. 14 Stockhouse Baghouse, exhausting to stack IDSH0367, servicing Blast Furnace 14. The No. 4 Blast Furnace Stockhouse constructed in 1979, controlled by dust suppression, services Blast Furnace No. 4.

(c) The No 6 Blast Furnace Stockhouse constructed in 1979, controlled by dust suppression, services Blast Furnace No. 6. The No. 8 Blast Furnace Stockhouse constructed in 1979, controlled by dust suppression, services Blast Furnace No. 8.

(d) No. 4 Blast Furnace, constructed in 1917, with a maximum capacity of 200 tons per hour, identified as IABF0308, using a Blast Furnace Gas Distribution System to collect the blast furnace gas and using natural gas injection and pulverized coal at a rate of 26 tons per hour, oil (from on-site contractor when it meets specifications) at a rate of 70 gallons per minute and/or coal tar (when the on-site contractor tar centrifuge is not operating) at a rate of 70 gallons per minute.

(1) Three (3) No. 4 Blast Furnace Stoves identified as IAST0360, replaced in 1947, with a maximum heat input capacity of 350 MMBtu per hour total combusting blast furnace gas (BFG) and natural gas, exhausting to the combustion stack IA6160.

(2) No. 4 Blast Furnace Casthouse, identified as IABF0308, constructed in 1917, with emissions from tapping and runners controlled by a natural gas iron oxide fume suppression system IA3177, exhausting to casthouse roof monitor IA6010.

(3) One (1) Slag Pit, identified as IASP0311, with fugitive emissions.

(e) No. 6 Blast Furnace, constructed in 1910, with a maximum capacity of 200 tons per hour, identified as IABFO341, using a Blast Furnace Gas Distribution System to collect the blast furnace gas and using natural gas injection and pulverized coal injected at a rate of 26 tons per hour, oil at a rate of 70 gallons per minute and /or coal tar at a rate of 70 gallons per minute.

(1) Four (4) No. 6 Blast Furnace Stoves identified as IBST0361, replaced in 1997, with a maximum heat input capacity of 350 MMBtu per hour total, combusting Blast Furnace Gas (BFG) and natural gas exhausting to the combustion stack IB6168.

(2) No. 6 Blast Furnace Casthouse, identified as IBBF0341, constructed in 1910, with emissions from tapping and runners controlled by a natural gas iron oxide fume suppression system IB3178, exhausting to casthouse roof monitor IB6011.

(3) One (1) Slag Pit, identified as IBSP0335, with fugitive emissions.

(f) No. 8 Blast Furnace, constructed in 1909, with a maximum capacity of 183 tons per hour, identified as ICBFO354, using a Blast Furnace Gas Distribution System to collect the blast furnace gas and using natural gas injection and pulverized coal injected at a rate of 26 ton per hour, oil at a rate of 70 gallons per minute and /or coal tar at a rate of 70 gallons per minute.

(1) Four (4) No. 8 Blast Furnace Stoves, identified as ICST0362, replaced in 1999, with a maximum heat input capacity of 325 MMBtu per hour total, combusting Blast Furnace Gas and natural gas, exhausting to the combustion stack IC6175.

(2) No. 8 Blast Furnace Casthouse, identified as ICBF0354, constructed in 1909, with emissions from tapping and runners controlled by a natural gas iron oxide fume suppression system IC3179, exhausting to cast house roof monitor IC6012.

(3) One (1) Slag Pit, identified as ICSP0363, with fugitive emissions.

(g) No. 14 Blast Furnace, constructed in 1974, with a maximum capacity of 450 tons per hour, identified as IDBF0369, using a Blast Furnace Gas Distribution System to collect the blast furnace gas and using natural gas injection and pulverized coal injected at a rate of 80 tons per hour, oil at a rate of 150 gallons per minute and/or coal tar at a rate of 150 gallons per minute.

(1) Three (3) No. 14 Blast Furnace Stoves identified as IDST0359, constructed in 1974, with a maximum heat input capacity of 700 MMBtu per hour total, combusting blast furnace gas and natural gas, exhausting to the combustion stack ID6184.

(2) No. 14 Blast Furnace Casthouse, identified as IDBF0369, constructed in 1974 with emissions controlled by a baghouse, identified as ID3185, exhausting to stack ID6187 and fugitive emissions exhausting through the casthouse roof monitor ID6013;

(3) One (1) Slag Pit, identified as IDSP0371, with fugitive emissions.

(4) Pursuant to Significant Source Modification 089-20118-00121, issued October 20, 2005, the following activities involved in the No. 14 Blast Furnace Reline Project were approved for construction:

(A) Replacement of furnace refractory lining with new and thinner refractory brick.

(B) Replacement of furnace shell.

(C) Removal and replacement of the top charging system with a new “bell-less” charging system.

(D) Placement of new copper staves in the mantle area of the furnace.

(E) Installation of copper cooling plates and a new bustle pipe.

(F) Repair of the checker work brick in the stoves and various structural, mechanical and electrical repairs.

(G) Enlargement of the slag granulator and addition of a stack.

(H) Changes to the casthouse and casthouse emissions control system to improve capture efficiency of hoods at the tap holes, iron troughs and runners.

(I) Removal and replacement of the existing system for cleaning blast furnace gas with a more efficient scrubbing system.

(h) One (1) No. 14 Blast Furnace Slag Granulation Plant owned by U.S. Steel -Gary Works and operated by U.S. Steel - Gary Works as part of the slag processing operation. The granulation plant has a maximum capacity of 1,704,000 tons of steel mill slag per year, consisting of the following:

(1) One (1) hot slag quenching operation, constructed in 1991, directed to a hooded exhaust stack.

(2) Two (2) silos, constructed in 1991, for temporary slag storage.

(3) Two (2) belt conveyers, constructed in January 1995.

(4) One (1) storage silo and loadout bay, constructed in May 1995, with a capacity of 400,000 tons per year.

(i) One (1) blast furnace gas distribution system consisting of instrumentation and valves designed to limit the maximum pressure through the distribution system by venting excess blast furnace gas to the three (3) bleeder stacks equipped with Flare No. 1 identified as BG6073, constructed before 1920, Flare No. 2, identified as BG6074 constructed before 1920 and Flare No. 4 identified as BG6075, constructed in 1974.

(j) One (1) iron beaching process, constructed prior to 1965, identified as IMIB0378.

(k) One (1) transfer ladle maintenance operation, constructed prior to 1965, identified as, IMVM0375.

(The information describing the process contained in this facility description box is descriptive information and does not constitute enforceable conditions.)

Emission Limitations and Standards [326 IAC 2-7-5(1)]

D.7.1 Emission Offset Minor Limitation [326 IAC 2-3]

Pursuant to Construction Permit 089-2936-00133, issued July 2, 1993 and 326 IAC 2-3 (Emission Offset), the total granulation plant throughput shall not exceed 1,704,000 tons per 12 consecutive month period with compliance demonstrated at the end of each month. Therefore, the emission offset rule 326 IAC 2-3 does not apply.

D.7.2 PSD Minor Limit PM/PM_{10} [326 IAC 2-2]

In order render the requirements of PSD (Prevention of Significant Deterioration) not applicable for PM and PM_{10}, the Blast Furnace No. 14 Stockhouse Baghouse shall achieve 90% capture efficiency and the exhaust from stack IDSH0367 shall not exceed 2.57 lbs of PM per hour and 2.57 lbs of PM_{10} per hour.

Compliance with these limits will ensure that the PM and PM_{10} emissions increase from the modification permitted in Significant Permit Modification 089-27690-00121 shall be less than twenty-five (25) and fifteen (15) tons per year, respectively. Therefore, the requirements of 326 IAC 2-2 (PSD) are rendered not applicable to this modification.

D.7.3 Nonattainment New Source Review (NSR) Minor Limit [326 IAC 2-1.1-5]

In order render the requirements of Nonattainment NSR not applicable for $PM_{2.5}$, the Blast Furnace No. 14 Stockhouse Baghouse shall achieve 90% capture efficiency and the exhaust from stack IDSH0367 shall not exceed 2.19 lbs of $PM_{2.5}$ per hour.

Compliance with this limit will ensure that the $PM_{2.5}$ emissions increase from the modification permitted in Significant Permit Modification 089-27690-00121 shall be less than ten (10) tons per year and shall render the requirements of 326 IAC 2-1.1-5-2 (Nonattainment New Source Review (NSR)) not applicable to this modification.

D.7.4 Particulate Emission Limitation [326 IAC 6.8-1-2(a)]

Pursuant to Construction Permit 089-1953-00133, issued March 18, 1991 and 326 IAC 6.8-1-2(a) (Particulate Matter Limitations for Lake County), the particulate matter emissions from the slag

granulation process quenching hooded exhaust stack shall not exceed 0.03 grain per dry standard cubic foot (dscf).

D.7.5 Lake County PM_{10} Emission Requirements [326 IAC 6.8-2-38]

Pursuant to 326 IAC 6.8-2-38, PM_{10} emissions shall comply with the following:

(a) The PM_{10} emissions from the Blast Furnace No. 4 stoves Stack IA6160 shall not exceed 0.033 pound per MMBtu of heat input and a total of 11.70 pounds per hour.

(b) The PM_{10} emissions from the Blast Furnace No. 6 stoves Stack IB6168 shall not exceed 0.033 pound per MMBtu of heat input and a total of 11.70 pounds per hour.

(c) The PM_{10} emissions from the Blast Furnace No. 8 stoves Stack IC6175 shall not exceed 0.033 pound per MMBtu of heat input and a total of 11.70 pounds per hour.

(d) The PM_{10} emissions from the Blast Furnace No. 14 stoves Stack ID6184 shall not exceed 0.029 pound per MMBtu of heat input and a total of 20.40 pounds per hour.

(e) The PM_{10} emissions from the Number 14 Blast Furnace Casthouse Baghouse Stack ID6187 shall not exceed 0.0090 grains per dry standard cubic feet and 38.57 pounds per hour.

(f) Each emission limit applies to one (1) stack serving one (1) facility unless otherwise noted. The emissions limitations apply to one (1) stack serving the multiple units specified when the facility description notes stack serving, and to each stack of multiple stacks serving multiple facilities when the facility description notes each stack serving.

D.7.6 Fugitive Dust Emission Limitations [326 IAC 6-4-2][326 IAC 6.8-10-3]

(a) Pursuant to 326 IAC 6-4-2:

(1) The iron beaching and ladle maintenance generating fugitive dust shall be in violation of this rule (326 IAC 6-4) if any of the following criteria are violated:

(A) A source or combination of sources which cause to exist fugitive dust concentrations greater than sixty-seven percent (67%) in excess of ambient upwind concentrations as determined by the following formula:

$$P = \frac{100\ (R) - U)}{U}$$

Where
P = Percentage increase
R = Number of particles of fugitive dust measured at downward receptor site
U = Number of particles of fugitive dust measured at upwind or background site

(B) The fugitive dust is comprised of fifty percent (50%) or more respirable dust, then the percent increase of dust concentration in subdivision (1) of this section shall be modified as follows:

$$PR = (1.5 \pm N)\ P$$

Where
N = Fraction of fugitive dust that is reparable dust;

PR = allowable percentage increase in dust concentration above background; and
P = no value greater than sixty-seven percent (67%).

(C) The ground level ambient air concentrations exceed fifty (50) micrograms per cubic meter above background concentrations for a sixty (60) minute period.

(D) If fugitive dust is visible crossing the boundary or property line of a source. This subdivision may be refuted by factual data expressed in subdivisions (1), (2) or (3) of this section. 326 IAC 6-4-2(4) is not federally enforceable.

(2) Pursuant to 326 IAC 6-4-6(6) (Exceptions), fugitive dust from a source caused by adverse meteorological conditions will be considered an exception to this rule (326 IAC 6-4) and therefore not in violation.

(b) Pursuant to 326 IAC 6.8-10-3 Lake County Fugitive Particulate Matter Emissions Limitations, fugitive emissions from iron beaching and ladle maintenance generating fugitive emissions shall comply with the emissions limitations in Section C.5 - Fugitive Dust Emissions.

(c) Pursuant to 326 IAC 6.8-10-3(7)(A), the PM_{10} emissions from Blast Furnace No. 14 Stockhouse Baghouse Stack IDSH0367 shall not exceed 0.022 grain per dry standard cubic foot (dscf) and ten percent (10%) opacity.

D.7.7 Sulfur Dioxide (SO_2) Limitations [326 IAC 7-4.1-20(a)(1)(I)(J) and (K)

(a) Pursuant to 326 IAC 7-4.1-20(a)(1)(I)(J), and (K), the SO_2 emissions from the No. 4 Blast Furnace Stoves IAST0360, No. 6 Blast Furnace Stoves IBST0361, No. 8 Blast Furnace Stoves ICST0362 and No. 14 Blast Furnace Stoves IDST0359 shall comply with the following when the coke oven gas desulfurization unit is not operating:

Furnace	Emission Limit lbs/MMBtu	Emission Limit lbs/hr
Blast Furnace No. 4 Stove Stack	0.115	40.25 total
Blast Furnace No. 6 Stove Stack	0.115	40.25 total
Blast Furnace No. 8 Stove Stack	0.115	37.38 total
Blast Furnace No. 14 Stove Stack during periods when combusting blast furnace gas	0.134	93.50 total
Blast Furnace No. 14 Casthouse Baghouse Stack during periods when Blast Furnace No. 14 Stoves are combusting blast furnace gas.	---	115.0

(b) Pursuant to 326 IAC 7-4.1-20(b)(5) and (9), the SO_2 emissions from the No. 4 Blast Furnace Stoves IAST0360, No. 6 Blast Furnace Stoves IBST0361, No. 8 Blast Furnace Stoves ICST0362 and No. 14 Blast Furnace Stoves IDST0359 shall comply with the following when the coke oven gas desulfurization unit is operating:

Furnace	Emission Limit lbs/MMBtu	Emission Limit lbs/hr
Blast Furnace No. 4 Stove Stack	0.115	40.25 total
Blast Furnace No. 6 Stove Stack	0.115	40.25 total
Blast Furnace No. 8 Stove Stack	0.115	37.38 total
Blast Furnace No. 14 Stove Stack	0.134	93.50 total
Blast Furnace No. 14 Casthouse Baghouse Stack	---	115.0

D.7.8 Carbon Monoxide (CO) Limitations [326 IAC 9-1-2(2)]

Pursuant to 326 IAC 9-1-2(2), no carbon monoxide shall be discharged from the No. 14 Blast Furnace IDBF0369, waste gas stream, unless the gas stream is burned in one of the following: a direct-flame afterburner, boiler or recuperative incinerator. In instances where carbon monoxide destruction is not required, carbon monoxide emissions shall be released at such elevation that the maximum ground level concentration from a single source shall not exceed twenty percent (20%) of the maximum ground one hour Indiana ambient air quality value for carbon monoxide.

Compliance Determination Requirements

D.7.9 Testing Requirements [326 IAC 2-7-6(1),(6)][326 IAC 2-1.1-11]

(a) Within 2.5 years after the most recent valid compliance demonstration, the Permittee shall perform PM_{10} testing on the No. 14 Blast Furnace Casthouse Baghouse Stack ID6187 for the purpose of determining compliance with Condition D.7.6, utilizing methods as listed in 326 IAC 6.8-4-1(5) or a testing method approved by the Commissioner. This test shall be repeated at least once every 2.5 years from the date of the most recent valid compliance demonstration.

(b) Within 5 years after the most recent valid compliance demonstration, the Permittee shall perform PM, PM_{10}, and $PM_{2.5}$ testing on the Blast Furnace No. 14 Stockhouse Baghouse for the purpose of determining compliance with Condition D.7.2 and D.7.6(c), utilizing methods as listed in 326 IAC 6.8-4-1(5) or a testing method approved by the Commissioner. This test shall be repeated at least once every 5 years from the date of the most recent valid compliance demonstration.

Testing shall be conducted in accordance with the provisions of 326 IAC 3-6 (Source Sampling Procedures). Section C - Performance Testing contains the Permittee's obligation with regard to the performance testing required by this condition.

D.7.10 Sulfur Fuel Sampling and Analysis [326 IAC 7-4-1.1(d)]

To demonstrate compliance with condition D.7.7, the Permittee shall perform Sulfur Fuel Sampling and Analysis. Section C - Sulfur Fuel Sampling and Analysis contains the Permittee's obligation with regard to the sampling and analysis required by this condition.

D.7.11 Particulate Matter and CO Control [326 IAC 2-7-6(6)]

(a) Except as otherwise provided by statute, rule or this permit, the baghouses for particulate control shall be in operation and control emissions at all times the associated coal processing or drop point conveyors are in operation.

(1) Nos. 4, 6 and 8 Blast Furnace natural gas iron oxide fume suppression systems IA3177, IB3178, IC3179, shall be in operation in order minimize particulate matter emissions as follows:

(A) The iron and slag runners at the No. 4 Blast Furnace shall be equipped with a natural gas fired lance for fume suppression during the cast to minimize particulate matter emissions.

(B) The iron and slag runners at the No. 6 Blast Furnace shall be equipped with a natural gas fired lance for fume suppression during the cast to minimize particulate matter emissions.

(C) The iron and slag runners at the No. 8 Blast Furnace shall be equipped with a natural gas fired lance for fume suppression during the cast to minimize particulate matter emissions.

(2) The No. 14 blast furnace Casthouse Baghouse ID3185 shall be in operation at all times during casting operations at the No. 14 Blast Furnace Casthouse is in operation.

(3) The Blast Furnace No. 14 Stockhouse Baghouse shall be in operation at all times when material conveying and/or sizing operations at the Blast Furnace No. 14 Stockhouse are in operation.

(4) In the event that bag failure is observed in a multi-compartment baghouse, if operations will continue for ten (10) days or more after the failure is observed before the failed units will be repaired or replaced, the Permittee shall promptly notify the IDEM, OAQ of the expected date the failed units will be repaired or replaced. The notification shall also include the status of the applicable compliance monitoring parameters with respect to normal, and the results of any response actions taken up to the time of notification.

(b) Carbon Monoxide Emissions Control

The Blast Furnace Gas Distribution System Flare controls GC3629, GC3628 and GC3627 and bleeder stack Flare No. 1 BG6073, Flare No. 2 BG6074 and Flare No. 4 BG6075 shall be in operation and the pilot flame shall be present at all times when the No. 14 Blast Furnace, No. 4 Blast Furnace, No. 6 Blast Furnace and No. 8 Blast Furnace are in operation in order to minimize CO emissions.

D.7.12 Fugitive Dust Control

The dust suppression used as control for the fugitive particulate emissions from the granulation plant shall be applied as often as necessary to control fugitive dust.

Compliance Monitoring Requirements [326 IAC 2-7-6(1)][326 IAC 2-7-5(1)]

D.7.13 Visible Emissions Notations

(a) Visible emission notations of the No. 14 Blast Furnace Casthouse Baghouse Stack ID6187, Blast Furnace No. 14 Stockhouse Baghouse Stack IDSH0367, iron beaching, quenching hooded exhaust, transferring, conveying operations, and loadout bay shall be performed once per day during normal daylight operations when exhausting to the atmosphere. A trained employee shall record whether emissions are normal or abnormal.

(b) For processes operated continuously, "normal" means those conditions prevailing, or expected to prevail, eighty percent (80%) of the time the process is in operation, not counting startup or shut down time.

(c) In the case of batch or discontinuous operations, readings shall be taken during that part of the operation that would normally be expected to cause the greatest emissions.

(d) A trained employee is an employee who has worked at the plant at least one (1) month and has been trained in the appearance and characteristics of normal visible emissions for that specific process.

(e) If abnormal emissions are observed, the Permittee shall take a reasonable response. Section C - Response to Excursions or Exceedances contains the Permittee's obligation with regard to the reasonable response steps required by this condition. Failure to take response steps shall be considered a deviation of this permit.

(f) The Permittee shall comply with the most current Continuous Compliance Plan visible emission evaluation program. Section C - Continuous Compliance Plan contains the Permittee's obligation with regard to the visible emission evaluation program required by this condition.

D.7.14 Parametric Monitoring

(a) The Permittee shall record the pressure drop across the No. 14 Blast Furnace Cast house baghouse ID3185, at least once per day when the No. 14 Blast Furnace Casthouse is in operation. When for any one reading, the pressure drop across the baghouses is outside the normal range, the Permittee shall take a reasonable response. The normal range for this unit is a pressure drop between 3 and 9 inches of water unless a different upper-bound or lower-bound value for this range is determined during the latest stack test. Section C - Response to Excursions and Exceedances contains the Permittee's obligation with regard to the reasonable response steps required by this condition. A pressure reading that is outside the above mentioned range is not a deviation from this permit. Failure to take response steps shall be considered a deviation of this permit.

(b) The Permittee shall record the pressure drop across the Blast Furnace No. 14 Stockhouse Baghouse, at least once per day when the No. 14 Blast Furnace Stockhouse processes are in operation. When for any one reading, the pressure drop across the baghouses is outside the normal range, the Permittee shall take a reasonable response. The normal range for this unit is a pressure drop between 3 and 9 inches of water unless a different upper-bound or lower-bound value for this range is determined during the latest stack test. Section C - Response to Excursions and Exceedances contains the Permittee's obligation with regard to the reasonable response steps required by this condition. A pressure reading that is outside the above mentioned range is not a deviation from this permit. Failure to take response steps shall be considered a deviation of this permit.

(c) The Permittee shall comply with the most current Continuous Compliance Plan for the baghouse operation, recording and maintenance. Section C - Continuous Compliance Plan contains the Permittee's obligation with regard to the baghouse operation, recording and maintenance required by this condition.

(d) The instrument used for determining the pressure shall comply with Section C - Instrument Specifications, of this permit, shall be subject to approval by IDEM, OAQ, and shall be calibrated or replaced at least once every six (6) months or other time period specified by the manufacturer. The Permittee shall maintain records of the manufacturer specifications, if used.

Record Keeping and Reporting Requirements [326 IAC 2-7-5(3)] [326 IAC 2-7-19]

D.7.15 Record Keeping Requirements

(a) To document the compliance status with Condition D.7.1, the Permittee shall maintain records at the plant of the total tons of slag processed in the granulation plant per twelve (12) consecutive month period.

(b) To document the compliance status with Condition D.7.7, the Permittee shall maintain records in accordance with Section C – Sulfur Dioxide SO_2 Record Keeping (Entire Source).

(c) To document the compliance status with Condition D.7.13, the Permittee shall maintain records of once per day visible emission notations of the No. 14 Casthouse Baghouse Stack (ID6187), the Blast Furnace No. 14 Stockhouse Baghouse exhaust stack (IDSH0367), the iron beaching facility, quenching hooded exhaust, transferring, conveying operations, and loadout bay when in operation. The Permittee shall include in its daily record when a visible emission notation is not taken and the reason for the lack of visible emission notation (e.g. the process did not operate that day).

(d) To document the compliance status with Condition D.7.14, the Permittee shall maintain the records of the once per day pressure drop of the No. 14 Casthouse Baghouse and the Blast Furnace No. 14 Stockhouse Baghouse during normal operation. The Permittee shall include in its daily record when a pressure drop reading is not taken and the reason for the lack of pressure drop reading (e.g. the process did not operate that day).

(e) Section C - General Record Keeping Requirements contains the Permittee's obligations with regard to the records required by this condition.

D.7.16 Reporting Requirements

A quarterly summary report to document the compliance status with condition D.7.1 and D.7.7 shall be submitted not later than thirty (30) days after the end of the quarter being reported. Section C - General Reporting contains the Permittee’s obligation with regard to the reporting required by this condition. The report submitted by the Permittee does require a certification that meets the requirements of 326 IAC 2-7-6(1) by a "responsible official" as defined by 326 IAC 2-7-1(35).

D.7.17 Actual to Projected Actual Applicability Test [326 IAC 2-2-2(d)] [326 IAC 2-2-3(c)]

(a) Pursuant to SSM 089-20118-00121, issued October 20, 2005, 326 IAC 2-2-2(d) and 326 IAC 2-3-2(c), the No. 14 Blast Furnace Reline Project shall not cause a significant net emission increase for any of the pollutants listed in 326 IAC 2-2-1(ww) and 326 IAC 2-3-1(pp).

The significant net emission increase shall be determined using the Actual to Projected Actual Applicability Test.

Therefore, the requirements of 326 IAC 2-2 (Prevention of Significant Deterioration) and 326 IAC 2-3 (Emission Offset) are not applicable.

(b) Unless otherwise specified in this permit, all record keeping requirements not already legally required shall be implemented when the new or modified equipment begins normal operation.

(c) If there is a reasonable possibility that the No. 14 Blast Furnace Reline Project may result in a significant emission increase and the Permittee elects to utilize the “projected actual emissions” (as defined in 326 IAC 2-2-1(pp) and 326 IAC 2-3-1 (kk)), the Permittee shall comply with the following:

(1) Before beginning actual construction of the “project” (as defined in 326 IAC 2-2-1(qq) and 326 IAC 2-3-1(ll)) at an existing emission unit, document and maintain the following records:

(A) A description of the project;

(B) Identification of any emission unit whose emissions of a regulated new source review (NSR) pollutant could be affected by the project;

(C) A description of the applicability test used to determine that the project is not a major modification for any regulated NSR pollutant, including:

(i) Baseline actual emissions;

(ii) Projected actual emissions;

(iii) Amount of emissions excluded under section 326 IAC 2-2-1(pp)(2)(A)(iii); and

(iv) An explanation for why the amount was excluded, and any netting calculations, if applicable.

(2) Monitor the emissions of any regulated NSR pollutant that could increase as a result of the project and that is emitted by any existing emission unit identified in (1)(B) above; and

(3) Calculate and maintain a record of the annual emissions, in tons per year on a calendar year basis, for a period of five (5) years following resumption of regular operations after the change, or for a period of ten (10) years following resumption of regular operations after the change if the project increases the design capacity or the potential to emit that regulated NSR pollutant at the emission unit.

D.7.18 Volatile Organic Compounds (VOC) De Minimis [326 IAC 2-3-2(b)]

Pursuant to SSM 089-20118-00121, issued October 20, 2005 and 326 IAC 2-3-2(b), the VOC emissions increases for the five (5) calendar year period January 2000 to December 2005 plus the net emission increase from the No. 14 Blast Furnace Reline Project resulted in an emission increase less than the VOC de minimis level (25 tons per year).

SECTION D.8 FACILITY OPERATION CONDITIONS

Emission Unit Description: Number 1 BOP Shop

(a) Two (2) Stations, identified as No. 1 and No. 2, Hot Metal Transfer and Desulfurization Stations. The Desulfurization Stations were originally constructed in 1981 and the Hot Metal Transfer Stations were originally constructed in 1965, and replaced in 1998. Each station consists of Hot Metal Desulfurization, SSDS0201, Hot Metal Transfer SSMT0203 and Slag Skimming SSSS0205. Hot metal from the blast furnaces is desulfurized and skimmed prior to charging in the steel making vessels. The maximum capacity of each station is 456 tons per hour. Each station is equipped with a local exhaust ventilation hood to capture emissions ducted to the Hot Metal Desulfurization/Skimming Stations Baghouse SS3100. The desulfurization units are equipped with nitrogen suppression around where the desulfurization lance penetrates the hood hole.

(b) One (1) Flux handling system, identified as SSFH0206, constructed in 1965, used for unloading, temporary storage, and transfer of fluxing agents to the steel making vessels, with a maximum capacity of 80 tons per hour. Emissions are controlled by No. 1, No. 2 and No. 3 baghouses SS3058, SS3059, and SS3053. Nos. 1 and 2 exhaust inside the building and No. 3 discharges through stack SS6056.

(c) Basic Oxygen Process (BOP) Vessels, constructed in 1965, consisting of BOP vessel M, identified as SSVM0234, vessel E, identified as SSVE0235 and vessel D, identified as SSVD0236, with a maximum capacity of 250 tons per hour each. Emissions are controlled by open combustion hoods and an exhaust emission hood collection system, which exhausts emissions to the Gas Cleaning Systems SS3103 and SS3104.

(d) Two (2) gas cleaning systems SS3103 and SS3104 that process the exhaust gases from the three (3) steel making vessels consisting of three (3) quenchers, two (2) scuppers, two (2) Venturi scrubbers, two (2) separators, two (2) gas coolers fitted with internal mist eliminators and two (2) induced draft fans. Emissions exhaust through stacks SS6102 and SS6103.

(e) CASbell/OB Lancing Stations M, D and E, include the controlled argon stirring process and blowing of oxygen to maintain temperature and chemistry. Constructed in 1981, Station M, identified as SSCM0231, Station E identified as SSCE0232, and Station D identified as SSCD0233 with a maximum capacity of 250 tons per hour each. Emissions are controlled by the CASbell/OB Lancing baghouse SS3105, exhausting through Stack SS6104 and uncaptured emissions venting to the roof monitor SS6636.

(f) One (1) Slingot Moulding Station, including the casting of bottom-poured steel ingots, identified as SSMS0227, constructed in 1965, exhausting to the roof monitor SS6637.

(g) Nine (9) natural gas fired Ladle Preheaters and Dryers identified as No. 1 through 9, with 1 through 4, constructed in 1983, 5 and 6 constructed in 1982 and 7 through 9 construction unknown. Six (6) Preheaters with a capacity of 14 MMBtu/hr each and three (3) Dryers with a capacity of 10 MMBtu/hr each, identified as SSLD0230, exhausting through Roof Monitor SS6637.

(h) One (1) Continuous Caster, identified as SCSC0274, constructed in 1967, including a Tundish dryer with a heating capacity of 7.0 MMBtu/hr per hour, continuously casting steel slabs with a maximum capacity of 275 tons per hour. Emissions exhaust through Roof Monitor SC6638.

(i) One (1) fugitive emissions mitigation system at the No. 1 BOP Shop, constructed in June 2002, consisting of a capture hood system ducted to a 99% efficient baghouse with a flow rate of 11,500 acfm.

(j) One emergency slag skimming station with a maximum capacity of 456 tons per hour exhausting through Roof Monitor SS6636.

(The information describing the process contained in this facility description box is descriptive information and does not constitute enforceable conditions.)

Emission Limitations and Standards [326 IAC 2-7-5(1)]

D.8.1 Lake County PM_{10} Emission Requirements [326 IAC 6.8-2-38]

Pursuant to 326 IAC 6.8-2-38, PM_{10} emissions from the No. 1 Basic Oxygen Process Shop operations shall comply with the following:

(a) The PM_{10} emissions from the No. 1 BOP Shop Hot Metal Transfer and Desulfurization Stations Baghouse discharge shall not exceed 0.007 grains per dry standard cubic foot of exhaust air and 15.0 pounds per hour.

(b) The PM_{10} emissions from the No. 1 BOP Shop Gas Cleaning System Stacks SS6102 and SS6103 shall not exceed 0.011 grains per dry standard cubic foot of exhaust air and a total of 46.0 pounds per hour.

(c) The PM_{10} emissions from the No. 1 BOP CASBell/OB Lancing Baghouse Stack SS6104 shall not exceed 0.0070 grains per dry standard cubic foot of exhaust air and 5.10 pounds per hour.

(d) Each emission limit applies to one (1) stack serving one (1) facility unless otherwise noted. The emissions limitations apply to one (1) stack serving the multiple units specified when the facility description notes stack serving, and to each stack of multiple stacks serving multiple facilities when the facility description notes each stack serving.

D.8.2 Particulate Emissions Limitations [326 IAC 6.8-1-2(a)]

Pursuant to 326 IAC 6.8-1-2(a), the particulate emissions from the roof monitors SS6636, NS6637 and SS6638 shall not exceed three-hundredths (0.03) grain per dry standard cubic foot (dscf).

D.8.3 Sulfur Dioxide (SO_2) Limitations [326 IAC 7-4.1-20(c)(3)]

Pursuant to 326 IAC 7-4.1-20(c)(3), an emission unit shall burn natural gas only:

(a) If it is not listed in this rule; or

(b) under any operating condition not specifically listed in this rule.

D.8.4 Sulfur Dioxide (SO_2) Limitations Hot Metal Transfer and Desulfurization Stations [326 IAC 7-4.1-20]

(a) Pursuant to the U.S. EPA Administrative Consent Order, issued January 2, 2004, the Permittee shall comply with the following:

(1) The SO_2 emissions from the Nos. 1 and 2 Hot Metal Transfer and Desulfurization Stations Baghouse as measured during all hot metal processing activities shall not exceed 0.05 pound per ton of hot metal. Hot metal processing will include hot metal transfer, hot metal desulfurization reagent injection and hot metal skimming, as applicable.

(2) The SO_2 emissions from the Nos. 1 and 2 Hot Metal Transfer and Desulfurization Stations Baghouse as measured during hot metal desulfurization reagent injection only shall not exceed 0.01 pound per ton of hot metal.

(b) Pursuant to 326 IAC 7-4.1-20(a)(1)(M) and ((b)(11), the SO_2 emissions from the Nos. 1 and 2 Hot Metal Transfer and Desulfurization Stations Baghouse shall not exceed 0.05 pounds per ton of hot metal and 28.54 pounds per hour.

Compliance Determination Requirements

D.8.5 Particulate Matter Testing Requirements [326 IAC 2-7-6(1),(6)][326 IAC 2-1.1-11]

(a) Within 2.5 years after the most recent valid compliance demonstration, the Permittee shall perform PM_{10} testing on the No. 1 BOP Desulfurization Baghouse discharge for the purpose of determining compliance with Condition D.8.1(a), utilizing methods approved by the Commissioner. This test shall be repeated at least once every 2.5 years from the date of the most recent valid compliance demonstration.

(b) Within 2.5 years after the most recent compliance demonstration, the Permittee shall perform PM_{10} testing on the No. 1 BOP Gas Cleaning Systems Stacks SS6102 and SS610 for the purpose of determining compliance with Condition D.8.1(b), utilizing methods approved by the Commissioner. This test shall be repeated at least once every 2.5 years from the date of the most recent valid compliance demonstration.

(c) Testing shall be conducted in accordance with the provisions of 326 IAC 3-6 (Source Sampling Procedures). Section C - Performance Testing contains the Permittee's obligation with regard to the performance testing required by this condition.

D.8.6 Sulfur Dioxide Testing Requirements

(a) Pursuant to the U.S. EPA Administrative Consent Order, issued January 2, 2004, within 2.5 years from the date of the most recent valid compliance test, the Permittee shall perform SO_2 emission testing on the No. 1 and No. 2 Hot Metal Desulfurization station baghouse discharge utilizing the test method 40 CFR 60, Appendix A Method 6C or other methods as submitted in accordance with the U.S. EPA Administrative Consent Order, issued January 2, 2004, for the purpose of determining compliance with condition D.8.4(a). This test shall be repeated at least once every 2.5 years from the date of the most recent valid compliance demonstration.

(b) Pursuant to the U.S. EPA Administrative Consent Order, issued January 2, 2004, within 2.5 years from the date of the most recent valid compliance test, the Permittee shall perform SO_2 emission testing on the No. 1 and No. 2 Hot Metal Desulfurization Station Baghouse discharge utilizing the test method 40 CFR 60, Appendix A Method 6C or other methods as submitted in accordance with the U.S. EPA Administrative Consent Order, issued January 2, 2004, for the purpose of determining compliance with condition D.8.4(b) during the desulfurization reagent injection only. This test shall be repeated at least once every two and one-half (2 ½) years from the date of the most recent valid compliance demonstration.

(c) Pursuant to the U.S. EPA Administrative Consent Order, issued January 2, 2004 demonstration of compliance by performance testing per D.8.6 (b) above shall not fulfill the compliance demonstration requirement for D.8.6(a).

(d) Testing shall be conducted in accordance with the provisions of 326 IAC 3-6 (Source Sampling Procedures). Section C - Performance Testing contains the Permittee's obligation with regard to the performance testing required by this condition.

D.8.7 Particulate Matter Control [326 IAC 2-7-6(6)]

(a) Except as otherwise provided by statue, rule or this permit, the control devices listed below shall be in operation for particulate emissions control at all times the associated process is in operation. The control devices are as follows:

(1) The Hot Metal Desulfurization/Skimming Baghouse SS3100,

(2) Flux Handling System Baghouses SS3053, SS3058 and SS3059,

(3) BOP Gas Cleaning systems SS3103 and SS3104; and

(4) CASBell/OB Lancing Station Baghouse SS3105.

(b) In the event that bag failure is observed in a multi-compartment baghouse, if operations will continue for ten (10) days or more after the failure is observed before the failed units will be repaired or replaced, the Permittee shall promptly notify the IDEM, OAQ of the expected date the failed units will be repaired or replaced. The notification shall also include the status of the applicable compliance monitoring parameters with respect to normal, and the results of any response actions taken up to the time of notification.

Compliance Monitoring Requirements [326 IAC 2-7-6(1)][326 IAC 2-7-5(1)]

D.8.8 Visible Emissions Notations

(a) Visible emission notations of the BOP Operations Gas Cleaning System stacks SS6102 and SS6103, and CASBell/OB Lancing Station Baghouse stack SS6104, shall be performed once per day during normal daylight operations. A trained employee shall record whether emissions are normal or abnormal.

(b) For processes operated continuously, "normal" means those conditions prevailing, or expected to prevail, eighty percent (80%) of the time the process is in operation, not counting startup or shut down time.

(c) In the case of batch or discontinuous operations, readings shall be taken during that part of the operation that would normally be expected to cause the greatest emissions.

(d) A trained employee is an employee who has worked at the plant at least one (1) month and has been trained in the appearance and characteristics of normal visible emissions for that specific process.

(e) If abnormal emissions are observed, the Permittee shall take a reasonable response. Section C - Response to Excursions or Exceedances contains the Permittee’s obligation with regard to the reasonable response steps required by this condition. Failure to take response steps shall be considered a deviation from this permit.

(f) The Permittee shall comply with the most current Continuous Compliance Plan visible emission evaluation program. Section C - Continuous Compliance Plan contains the Permittee's obligation with regard to the visible emission evaluation program required by this condition.

D.8.9 Parametric Monitoring

(a) The Permittee shall record the pressure drop across the CASBell/OB Lancing Stations baghouse SS3105 used in conjunction with the CASBell/OB Lancing Stations, at least once per day when the CASBell/OB Lancing Stations are in operation. When for any one reading, the pressure drop across the baghouse is outside the normal, the Permittee shall take a reasonable response. The normal range for this unit is a pressure drop between 2 and 10 inches of water unless a different upper-bound or lower-bound value

for this range is determined during the latest stack test Section C - Response to Excursions or Exceedances contains the Permittee's obligation with regard to the reasonable response steps required by this condition. A pressure reading that is outside the above mentioned range is not a deviation from this permit. Failure to take response steps shall be considered a deviation of this permit.

(b) The Permittee shall record the pressure drop and flow rate of the scrubbers used in conjunction with the three (3) BOP vessels M, E, and D, at least once per day when the three (3) BOP vessels M, E, and D units are in operation. When for any one reading, the pressure drop or flow rate across the scrubbers is outside the normal range, the Permittee shall take a reasonable response. The normal range for this unit is a range of 50 and 90 inches of water and the normal flow rate of the scrubber is 2500 to 4500 gallons per minute (gpm) unless a different upper-bound or lower-bound value for these ranges is determined during the latest stack test. Section C - Response to Excursions or Exceedances contains the Permittee's obligation with regard to the reasonable response steps required by this condition. A reading that is outside the above mentioned range~~s~~ for respective parameters is not a deviation from this permit. Failure to take response steps shall be considered a deviation of this permit.

(c) The Permittee shall record the pressure drop across the Hot Metal Transfer and Desulfurization Baghouse SS3100 used in conjunction with the No. 1 BOP Hot Metal Desulfurization stations, at least once per day when the No. 1 BOP Hot Metal Desulfurization Stations are in operation. When for any one reading, the pressure drop across the baghouse is outside the normal range, the Permittee shall take a reasonable response. The normal range for this unit is a pressure drop between 2 and 10 inches of water unless a different upper-bound or lower-bound value for this range is determined during the latest stack test Section C - Response to Excursions or Exceedances contains the Permittee's obligation with regard to the reasonable response steps required by this condition. A pressure reading that is outside the above mentioned range is not a deviation from this permit. Failure to take response steps shall be considered a deviation of this permit.

(d) The Permittee shall comply with the most current Continuous Compliance Plan for the baghouse operation, recording and maintenance. Section C - Continuous Compliance Plan contains the Permittee's obligation with regard to the baghouse operation, recording and maintenance required by this condition.

(e) The instruments used for determining the pressure and flow rate shall comply with Section C – Instrument Specifications, of this permit, shall be subject to approval by IDEM, OAQ, and shall be calibrated or replaced at least once every six (6) months or other time period specified by the manufacturer. The Permittee shall maintain records of the manufacturer specifications, if used.

D.8.10 Scrubber Failure Detection

In the event that a scrubber failure has been observed:

Failed units and the associated process will be shut down immediately until the failed units have been repaired or replaced. Operations may continue only if the event qualifies as an emergency and the Permittee satisfies the requirements of the emergency provisions of this permit (Section B - Emergency Provisions).

Record Keeping and Reporting Requirements [326 IAC 2-7-5(3)] [326 IAC 2-7-19]

D.8.11 Record Keeping Requirements

(a) Pursuant to the U.S. EPA Administrative Consent Order, issued January 2, 2004, and in order to document the compliance status with Condition D.8.4, the Permittee shall keep

records of the monthly hot metal throughput for the No. 1 and No. 2 Hot Metal Transfer and Desulfurization Stations.

(b) To document the compliance status with Visible Emission Notations, Condition D.8.8, the Permittee shall maintain records of once per day visible emission notations of the Hot Metal Desulfurization Baghouse Stack SS6101, the BOP Gas Cleaning System Stacks SS6102 and SS6103 and the CASBell/OB Lancing Station Baghouse Stacks SS6104 exhausts. The Permittee shall include in its daily record when a visible emission notation is not taken and the reason for the lack of visible emission notation (e.g. the process did not operate that day).

(c) To document the compliance status with Condition D.8.9, the Permittee shall maintain records of the parametric monitoring CASBell/OB Lancing Station Baghouse SS3105 and Hot Metal Transfer and Desulfurization Baghouse SS3100 total static pressure drop, and No. 1 BOP Shop Gas Cleaning System scrubbers, pressure drop across the venturi throats and scrubber supply water flow rate once per day during normal operation. The Permittee shall include in its daily record when a pressure drop reading and/or flow rate reading is not taken and the reason for the lack of pressure drop reading and/or flow rate reading (e.g. the process did not operate that day).

(d) Section C - General Record Keeping Requirements contains the Permittee's obligations with regard to the records required by this condition.

SECTION D.9 FACILITY OPERATION CONDITIONS

Emission Unit Description: Number 2 Q-BOP Shop

(a) Two (2) Hot Metal Transfer and Desulfurization Stations, identified as NSDS0246, constructed in 1987, with a maximum capacity of 510 tons per hour. These stations included: two (2) Hot Metal Mixers, identified as NSMM0264 and two (2) Hot Metal Mixer Heaters, identified as NSMH0251, constructed in 1973, with a maximum capacity of 255 tons per hour. The natural gas fired mixer heaters have a heat input capacity of 10 MMBtu/hr each. Emissions from the hot metal transfer and desulfurization stations, mixers and heaters are controlled by the Hot Metal Transfer and Desulfurization Stations Baghouse NS3115 that discharges through NS614. The uncontrolled emissions exhaust through roof monitor NS6631.

(b) Q-Basic Oxygen Process (BOP) vessels, constructed in 1973, consisting of BOP vessel T identified as NSVT0268, vessel W, identified as NSVW0269, and vessel Y, identified as NSVY0270, with a maximum capacity of 250 tons per hour each. Primary emissions are controlled by open combustion hood and two (2) Gas Cleaning Systems, secondary emissions are controlled by the Secondary Emissions Baghouse NS3124, exhausting to stack NS6123, and uncontrolled emissions exhaust through Roof Monitor NS6632.

(c) Two (2) Gas Cleaning Systems, identified as NS3125 and NS3126 located in the gas cleaner facility, constructed in 1973, process the exhaust gases from the three (3) steel making vessels through three (3) quenchers, two (2) scuppers (tank like structures that remove excess quench water and solids from the gas stream), two (2) Venturi scrubbers, two (2) separators, two (2) gas coolers with mist eliminators, and two (2) induced draft fans exhausting to Stacks NS6124 and NS6125.

(d) Three (3) Flux Bins T, W, and Y, identified as NSVT0265, NSVW0266 and NSVY0267, constructed in 1973, with a maximum capacity of 141 tons per hour each. Emissions are controlled by five (5) baghouses. Three (3) Flux Transfer Baghouses at 166' level identified as NS3112, NS3108, and NS3107, exhausting through Stacks NS6623, NS6627and NS6628 recycling captured material back to the process; One (1) North Flux Handling Baghouse at 116' level identified as NS3109 and one (1) South Flux Handling Baghouse at 116' level identified as NS3110, exhausting through stacks NS6626 and NS6625. Uncontrolled emissions exhaust through the roof monitor NS6632.

(e) Three (3) Ladle Metallurgical Facilities, LMF1 identified as NSL10293, LMF 2 identified as NSL20294 were constructed in 1986 and LMF 3 identified as NSL30295, constructed in 1991 with a maximum capacity of 348 tons per hour each. Hot fume emissions from LMF 1 and 2 are controlled by Nos. 1 and 2 LMF Hot Fume Exhaust Baghouses NS3135 and NS3136, exhausting through stacks NS6146 and NS6147. Material handling emissions at LMF 1 and 2 are controlled by the LMF Nos. 1 and 2 Material Handling Baghouse NS3052, exhausting through stack NS6055. The LMF 3 Hot Fume Exhaust and Material Handling emissions are controlled by the LMF 3 Hot Fume and Material Handling Baghouse NS3137, exhausting to stack NS6148. All uncontrolled emissions exhaust through the roof monitor NS6634.

(f) One (1) Capped Argon Bubbling (CAB) Station with oxygen blowing, approved in 2014 for construction, identified as NSC40296, with a maximum capacity of 477,000 tons per year, using the No. 3 LMF Hot Fume and Material Handling Baghouse NS3137 as control, and exhausting to stack NS6148. All uncontrolled emissions exhaust through the roof monitor NS6634.

(g) One (1) R-H Vacuum Degasser, identified as NSVD0271, constructed in 1989, with a maximum capacity of 297.1 tons of steel per hour consisting of two (2) natural gas fired heaters, one (1) active and one (1) spare, identified as NSAB0276 and NSSB0275, with heat input capacities of 12 MMBtu per hour and 3 MMBtu per hour, respectively. Carbon monoxide and other combustible gas emissions are controlled with a flare that exhausts through Stack NS6145 and uncontrolled emissions exhaust through the Roof Monitor NS6634.

(h) One (1) Slag Conditioning Station servicing the RH Vacuum Degasser, constructed in 1997, with a maximum capacity of 297.1 tons of steel per hour.

(1) PM_{10} emissions from the station are controlled by a baghouse exhausting through Stacks S-1 through S-6 and recycling captured material back to the process.

(2) PM_{10} emissions from the material handling of slag conditioning and metallurgical agents are exhausted through the RH Vacuum Degasser Slag Conditioning Baghouse NS3207, exhausting through Stack NS6636.

(i) One (1) Daytank Lime Silo at the lime dumping station, identified as NSDS0250 constructed in 1971. Emissions are controlled by the Daytank Lime Silo baghouse NS3106, exhausting through the stack, NS6629.

(j) Three (3) Continuous Casting Lines, identified as Lines A, B and C identified as, NCCA0284, NCCB0285 and NCCC0286, with a total maximum capacity of 800 tons per hour combined. Lines A and B were constructed in 1986. Line C was constructed in 1991. Emissions from the continuous casters go to the Roof Monitor NC6635.

(k) Fourteen (14) natural gas fired Ladle Preheaters, identified as NBLD0262, eleven (11) with a heat input capacity of 9 MMBtu per hour each and three (3) with a heat input of 10 MMBtu per hour each. Emissions go through Roof Monitor NS6633.

(l) Two (2) Hot Metal Ladle Skimmers, identified as NSLS0248, constructed in 1973. Emissions go through Roof Monitor NS6631.

(m) Two (2) Steel Slag Skimming Stations, consisting of slag skimmers, identified as NSS10292 and NSS20287. Both were constructed in 1973. Emissions go through Roof Monitor NS6633.

(n) One (1) Slingot Station, identified as NSST0290, constructed in 1986. Emissions go through Roof Monitor NS6634.

(o) Eight (8) natural gas fired Tundish Preheaters located at the No. 2 Caster, with a heat input capacity of 6 MMBtu per hour each. Emissions go through Roof Monitor NC6635.

(The information describing the process contained in this facility description box is descriptive information and does not constitute enforceable conditions.)

Emission Limitations and Standards [326 IAC 2-7-5(1)]

D.9.1 PSD Minor Limit [326 IAC 2-2]

In order to render the requirements of 326 IAC 2-2 (PSD) not applicable, the Permittee shall comply with the following:

(a) The PM emission rate from the Capped Argon Bubbling (CAB) Station, identified as NSC40296, controlled by the No. 3 LMF Hot Fume and Material Handling Baghouse NS3137, shall not exceed 2.7 pounds per hour.

(b) The PM_{10} emission rate from the Capped Argon Bubbling (CAB) Station, identified as NSC40296, controlled by the No. 3 LMF Hot Fume and Material Handling Baghouse NS3137, shall not exceed 2.7 pounds per hour.

(c) The $PM_{2.5}$ emission rate from the Capped Argon Bubbling (CAB) Station, identified as NSC40296, controlled by the No. 3 LMF Hot Fume and Material Handling Baghouse NS3137, shall not exceed 2.0 pounds per hour.

Compliance with these emission limits will ensure that the potential to emit from this modification is less than twenty-five (25) tons of PM per year, fifteen (15) tons of PM_{10} per year, and less than ten (10) tons of $PM_{2.5}$ per year and therefore will render the requirements of 326 IAC 2-2 not applicable.

D.9.2 Lake County PM_{10} Emission Requirements [326 IAC 6.8-2-38]

Pursuant to 326 IAC 6.8-2-38, the PM_{10} emissions from the Number 2 Q-BOP Shop operations shall comply with the following:

(a) The PM_{10} emissions from the Number 2 Q-BOP Hot Metal Transfer and Desulfurization Baghouses discharge NS6144 shall not exceed to 0.007 grains per dry standard cubic foot of exhaust air and 13.0 pounds per hour.

(b) The PM_{10} emissions from the Number 2 Q-BOP Secondary Emissions Baghouse stack NS6123 shall not exceed 0.007 grains per dry standard cubic foot of exhaust air and 27.0 pounds per hour.

(c) The PM_{10} emissions from the Number 2 Q-BOP Gas Cleaning System stacks NS6124 and NS6125 shall not exceed 0.0153 grains per dry standard cubic foot of exhaust air and a total of 44.40 pounds per hour.

(d) The PM_{10} emissions from the Number 2 Q-BOP North Flux Handling System Baghouse stack NS6626 shall not exceed to 0.0070 grains per dry standard cubic foot of exhaust air and 1.80 pounds per hour.

(e) The emissions from the Number 2 Q-BOP South Flux Handling System Baghouse stack NS6625, shall not exceed 0.0070 grains per dry standard cubic foot of exhaust air and 1.80 pounds per hour.

(f) The PM_{10} emissions from the Number 2 Q-BOP LMF Number 1 Hot Fume Exhaust Baghouse Stack NS6146 shall not exceed 0.007 grains per dry standard cubic foot of exhaust air and 5.1 pounds per hour.

(g) The PM_{10} emissions from the Number 2 Q-BOP LMF Number 2 Hot Fume Exhaust Baghouse Stack NS6147 shall not exceed 0.007 grains per dry standard cubic foot of exhaust air and 5.1 pounds per hour.

(h) The PM_{10} emissions from the Number 2 Q-BOP LMF Number 3 Hot Fume Exhaust and Material Handling Baghouse Stack NS6148 shall not exceed 0.0070 grains per dry standard cubic foot of exhaust air and 2.70 pounds per hour.

(i) The PM_{10} emissions from the Number 2 Q-BOP LMF Numbers 1 and 2 Material Handling Baghouse Stack NS6055, shall not exceed 0.007 grains per dry standard cubic foot of exhaust air and 3.83 pounds per hour.

(j) The PM_{10} emissions from the Number 2 Q-BOP RH Vacuum Degasser Slag Conditioning Baghouse stacks S-1 through S-6 shall not exceed 0.007 grains per dry standard cubic foot of exhaust air and 5.49 pounds per hour.

(k) Each emission limit applies to one (1) stack serving one (1) facility unless otherwise noted. The emissions limitations apply to one (1) stack serving the multiple units specified when the facility description notes stack serving, and to each stack of multiple stacks serving multiple facilities when the facility description notes each stack serving.

D.9.3 Particulate Emissions Limitations [326 IAC 6.8-1-2(a)]

Pursuant to 326 IAC 6.8-1-2(a), the particulate emissions from the roof monitors NS6631, NS6632, NS6633 and NS6634 shall not exceed three-hundredths (0.03) grain per dry standard cubic foot (dscf).

D.9.4 Sulfur Dioxide (SO_2) Limitations [326 IC 7-4.1-20(c)(3)]

Pursuant to 326 IAC 7-4.1-20(c)(3) gaseous fuel sources shall burn natural gas only:

(a) if it is not listed in 326 IAC 7-4.1-20; or

(b) under an operating condition not specifically listed in 326 IAC 7-4.1-20.

D.9.5 Sulfur Dioxide (SO_2 Limitations – Hot Metal Transfer and Desulfurization Stations [326 IAC 7-4.1-20]

(a) Pursuant to the U.S. EPA Administrative Consent Order, issued January 2, 2004, the Permittee shall comply with the following:

(1) The SO_2 emissions from the Hot Metal Transfer and Desulfurization Stations baghouse as measured during all hot metal processing activities shall not exceed 0.05 pound per ton of hot metal. Hot metal processing will include hot metal transfer, hot metal desulfurization reagent injection and hot metal skimming, as applicable.

(2) The SO_2 emissions from the Hot Metal Transfer and Desulfurization Stations Baghouse as measured during hot metal desulfurization reagent injection only shall not exceed 0.01 pound per ton of hot metal.

(b) Pursuant to 326 IAC 7-4.1-20(a)(1)(L) and (b)(10), the SO_2 emissions from the No. 2 QBOP Shop Hot Metal Transfer and Desulfurization Stations Baghouse shall not exceed 0.05 pounds per ton of hot metal and 28.54 pounds per hour.

D.9.6 Carbon Monoxide (CO) Limitations 326 IAC 9-1-2

Pursuant to 326 IAC 9-1-2(2), no carbon monoxide shall be discharged from the Number 2 Q-BOP furnace waste gas stream, unless the gas stream is burned in one of the following: a direct-flame afterburner, boiler or recuperative incinerator. In instances where carbon monoxide destruction is not required, carbon monoxide emissions shall be released at such elevation that the maximum ground level concentration from a single source shall not exceed twenty percent (20%) of the maximum ground one hour Indiana ambient air quality value for carbon monoxide.

Compliance Determination Requirements

D.9.7 Particulate Testing Requirements [326 IAC 2-7-6(1),(6)][326 IAC 2-1.1-11]

(a) Within 2.5 years from the date of the most recent compliance demonstration, the Permittee shall perform PM_{10} testing on the Number 2 Q-BOP Hot Metal Transfer and Desulfurization Stations Baghouse discharge for the purpose of determining compliance with Condition D.9.2(a), utilizing methods approved by the Commissioner. This test shall be repeated at least once every 2.5 years from the date of the most recent valid compliance demonstration.

(b) Within 2.5 years from the date of the most recent compliance demonstration, the Permittee shall perform PM_{10} testing on the Number 2 Q-BOP Gas Cleaning System stacks NS6124 and NS6125 for the purpose of determining compliance with Condition D.9.2 (c), utilizing methods approved by the Commissioner. This test shall be repeated at least once every 2.5 years from the date of the most recent valid compliance demonstration.

(c) Within 2.5 years from the date of the most recent compliance demonstration, the Permittee shall perform PM_{10} testing on the Number 2 Q-BOP Secondary Emissions Baghouse Stack NS6123 for the purpose of determining compliance with Condition D.9.2 (b), utilizing methods approved by the Commissioner. This test shall be repeated at least once every 2.5 years from the date of the most recent valid compliance demonstration.

(d) Not later than 180 days after the startup of the Capped Argon Bubbling (CAB) Station, identified as NSC40296, the Permittee shall perform PM, PM10, and PM2.5 testing of the LMF 3 Hot Fume and Material Handling Baghouse NS3137 utilizing methods approved by the commissioner at least once every 5.0 years from the date of the most recent valid compliance demonstration. PM10 and PM2.5 includes filterable and condensable PM.

(e) Testing shall be conducted in accordance with the provisions of 326 IAC 3-6 (Source Sampling Procedures). Section C - Performance Testing contains the Permittee's obligation with regard to the performance testing required by this condition.

D.9.8 Sulfur Dioxide (SO_2) Testing Requirements

(a) Pursuant to the U.S. EPA Administrative Consent Order, issued January 2, 2004 , within 2.5 years from the date of the most recent valid compliance test, the Permittee shall perform SO_2 emission testing on the No. 2 QBOP Shop Hot Metal Transfer and Desulfurization Stations Baghouse discharge during hot metal transfer, hot metal desulfurization, reagent injection and hot metal skimming operations for the purpose of determining compliance with Condition D.9.5(a)(1), utilizing the test protocol submitted in accordance with the U.S. EPA Administrative Consent Order, issued January 2, 2004.. This test shall be repeated at least once every 2.5 years from the date of the most recent valid compliance demonstration.

(b) Pursuant to the U.S. EPA Administrative Consent Order, issued January 2, 2004, within 2.5 years from the date of the most recent valid compliance test, the Permittee shall perform SO_2 emission testing on the No. 2 QBOP Shop Hot Metal Transfer and desulfurization station baghouse discharge during reagent injection operations only for the purpose of determining compliance with Condition D.9.5(a)(2), utilizing methods approved by the Commissioner. This test shall be repeated at least once every 2.5 years from the date of the most recent valid compliance demonstration.

(c) Pursuant to the U.S. EPA Administrative Consent Order, issued January 2, 2004, demonstration of compliance by performance testing per D.9.9(b) above shall not fulfill the compliance demonstration requirement for D.9.9(a).

(d) Testing shall be conducted in accordance with the provisions of 326 IAC 3-6 (Source Sampling Procedures). Section C - Performance Testing contains the Permittee's obligation with regard to the performance testing required by this condition.

D.9.9 Particulate Matter Control [326 IAC 2-7-6(6)]

(a) Except as otherwise provided by statute, rule or this permit, the control devices listed below shall be in operation for particulate emissions control at all times the associated operations at the No. 2 Q-BOP Shop are in operation. The control devices are as follows:

(1) Hot Metal Transfer and Desulfurization Baghouse NS3115

(2) No. 2 QBOP Secondary Emissions Baghouse NS3124

(3) The two (2) No. 2 QBOP Gas Cleaning Systems NS3125 and NS3126

(4) No. 1 LMF Hot Fume Exhaust Baghouse NS3135

(5) No. 2 LMF Hot Fume Exhaust Baghouse NS3136

(6) No. 1 and No. 2 LMF Material Handling Baghouse NS3052

(7) No. 3 LMF Hot Fume and Material Handling Baghouse NS3137

(b) In the event that bag failure is observed in a multi-compartment baghouse, if operations will continue for ten (10) days or more after the failure is observed before the failed units will be repaired or replaced, the Permittee shall promptly notify the IDEM, OAQ of the expected date the failed units will be repaired or replaced. The notification shall also include the status of the applicable compliance monitoring parameters with respect to normal, and the results of any response actions taken up to the time of notification.

D.9.10 Carbon Monoxide (CO) Control

The R-H Vacuum Degasser Flare NS6145 shall be in operation at all times the R-H Vacuum Degasser is in operation to control the CO emissions.

Compliance Monitoring Requirements [326 IAC 2-7-6(1)][326 IAC 2-7-5(1)]

D.9.11 Visible Emissions Notations

(a) Visible emission notations of the Desulfurization Stations baghouse stack NS6144, Secondary Baghouse stack NS6123, No. 2 Q-BOP Gas Cleaning System Stacks NS6124 and NS6125, and the LMF 3 Hot Fume and Material Handling Baghouse stack NS6148, shall be performed once per day during normal daylight operations. A trained employee shall record whether emissions are normal or abnormal.

(b) For processes operated continuously, "normal" means those conditions prevailing, or expected to prevail, eighty percent (80%) of the time the process is in operation, not counting startup or shut down time.

(c) In the case of batch or discontinuous operations, readings shall be taken during that part of the operation that would normally be expected to cause the greatest emissions.

(d) A trained employee is an employee who has worked at the plant at least one (1) month and has been trained in the appearance and characteristics of normal visible emissions for that specific process.

(e) If abnormal emissions are observed, the Permittee shall take a reasonable response. Section C - Response to Excursions or Exceedances contains the Permittee’s obligation with regard to the reasonable response steps required by this condition. Failure to take response steps shall be considered a deviation of this permit.

(f) The Permittee shall comply with the most current Continuous Compliance Plan visible emission evaluation program. Section C - Continuous Compliance Plan contains the Permittee's obligation with regard to the visible emission evaluation program required by this condition.

D.9.12 Parametric Monitoring

(a) The Permittee shall record the pressure drop across the No. 2 QBOP Secondary Emissions baghouse NS3124 used in conjunction with the secondary emissions from the three (3) Q-BOP vessels T, W, and Y, at least once per day, when any of the three (3) Q-BOP vessels T, W, and Y, is in operation. When for any one reading, the pressure drop across the baghouse is outside the normal range, the Permittee shall take a reasonable response. The normal range for this unit is a pressure drop between 2 and 10 inches of water unless a different upper-bound or lower-bound value for this range is determined during the latest stack test. Section C - Response to Excursions or Exceedances contains the Permittee's obligation with regard to the reasonable response steps required by this condition. A pressure reading that is outside the above mentioned range is not a deviation from this permit. Failure to take response steps shall be considered a deviation of this permit.

(b) The Permittee shall record the pressure drop across the venturi scrubber throats and scrubber total supply water flow rate of the No. 2 Q-BOP gas cleaning Systems scrubbers NS3125 and NS3126 used in conjunction with the 3 No. 2 Q-BOP vessels at least once per day when either the three (3) Q-BOP vessels T, W, and Y units is operating. For each scrubber system, when for any one reading across the venturi scrubber throats is outside the normal range, the Permittee shall take a reasonable response. The normal range for this unit is a pressure drop between 50 and 70 inches of water and the normal flow rate of the scrubber is 2,000 to 4,500 gallons per minute (gpm) unless a different upper-bound or lower-bound value for this range is determined during the latest stack test. Section C - Response to Excursions or Exceedances contains the Permittee's obligation with regard to the reasonable response steps required by this condition. A reading that is outside the above mentioned ranges for respective parameters is not a deviation from this permit. Failure to take response steps shall be considered a deviation of this permit.

(c) The Permittee shall record the pressure drop across the Hot Metal Desulfurization baghouse NS3115 used in conjunction with the No, 2 Q-BOP Hot Metal Desulfurization stations and mixers, at least once per day when the desulfurization stations and mixers are in operation. When for any one reading, the pressure drop across the baghouse is outside the normal range, the Permittee shall take a reasonable response. The normal range for this unit is a pressure drop between 2 and 10 inches of water unless a different upper-bound or lower-bound value for this range is determined during the latest stack test. Section C - Response to Excursions or Exceedances contains the Permittee's obligation with regard to the reasonable response steps required by this condition. A pressure reading that is outside the above mentioned range is not a deviation from this permit. Failure to take response steps shall be considered a deviation of this permit.

(d) The Permittee shall comply with the most current Continuous Compliance Plan for the baghouse operation, recording and maintenance. Section C - Continuous Compliance Plan contains the Permittee's obligation with regard to the baghouse operation, recording and maintenance required by this condition.

(e) The instrument used for determining the pressure and flow rate shall comply with Section C – Instrument Specifications, of this permit, shall be subject to approval by IDEM, OAQ, and shall be calibrated or replaced at least once every six (6) months or other time period specified by the manufacturer. The Permittee shall maintain records of the manufacturer specifications, if used.

D.9.13 Scrubber Failure Detection

In the event that a scrubber failure has been observed:

Failed units and the associated process will be shut down immediately until the failed units have been repaired or replaced. Operations may continue only if the event qualifies as an emergency and the Permittee satisfies the requirements of the emergency provisions of this permit (Section B - Emergency Provisions).

Record Keeping and Reporting Requirements [326 IAC 2-7-5(3)] [326 IAC 2-7-19]

D.9.14 Record Keeping Requirements

(a) Pursuant to the U.S. EPA Administrative Consent Order, issued January 2, 2004, and to document the compliance status with Condition D.9.5, the Permittee shall keep records of the monthly hot metal throughput for the No. 1 and No. 2 Hot Metal Desulfurization Stations.

(b) To document the compliance status with Condition D.9.11 the Permittee shall maintain the records of once per day visible emission notations of the Hot Metal Transfer and Desulfurization Stations baghouse discharge NS6144, No. 2 QBOP Secondary Emissions Baghouse Stack NS6123, No. 2 Q-BOP Gas Cleaning System Stacks NS6124 and NS6125, and the LMF 3 Hot Fume and Material Handling Baghouse stack NS6148 exhausts. The Permittee shall include in its daily record when a visible emission notation is not taken and the reason for the lack of visible emission notation (e.g. the process did not operate that day).

(c) To document the compliance status with Condition D.9.12, the Permittee shall maintain records of the once per day of the pressure drop of the No. 2 QBOP secondary emissions baghouse NS3124, pressure drop across the venturi scrubber throats and supply water flow rate of the No. 2 QBOP Gas cleaning systems scrubbers NS3125 and NS3126, and pressure drop of the Hot Metal Transfer and Desulfurization baghouse NS3115, during normal operation. The Permittee shall include in its daily record when a pressure drop reading and/or flow rate reading is not taken and the reason for the lack of pressure drop reading and/or flow rate reading (e.g. the process did not operate that day).

(d) Section C - General Record Keeping Requirements contains the Permittee's obligations with regard to the records required by this condition.

SECTION D.10 FACILITY OPERATION CONDITIONS

Emission Unit Description: One (1) 84- Inch Hot Strip Mill

(a) Four (4) reheat furnaces Nos. 1, 2, 3 and 4, identified as RMF10500, RMF20501, RMF30502 and RMF40503 commenced operation in 1967, with heat input capacity of 600 MMBtu per hour each. Each furnace is equipped to combust natural gas and coke oven gas with emissions exhausting through Stacks RM6500, RM6501, RM6502 and RM6503.

(b) Two (2) waste heat boilers Nos. 1 and 2 , identified as RB1B0508 and RB2B0509, commenced operation in 1967, with a heat input capacity of 226 MMBtu per hour each. The heat input capacity from fuel from these boilers is derived from a combination of waste heat ducted from the reheat furnaces and the combustion of natural gas and coke oven gas. Emissions exhaust through the waste heat boiler stacks HB6504 and HB6505.

(c) One (1) 84-inch Hot Strip Mill, identified as RMV00504, commenced operation in 1967, with a maximum capacity of 856 tons per hour, 5 roughing mills and a 7-stand finishing mill with fugitive emissions through a Roof Monitor RM6630.

(The information describing the process contained in this facility description box is descriptive information and does not constitute enforceable conditions.)

Emission Limitations and Standards [326 IAC 2-7-5(1)]

D.10.1 Lake County PM_{10} Emission Requirements [326 IAC 6.8-2-38]

(a) Pursuant to Significant Source Modification 089-19709-00121, issued May 2, 2005 and 326 IAC 6.8-2-38, PM_{10} emissions from the 84" Hot Strip Mill Reheat Furnaces Nos. 1, 2, 3 and 4 Stacks RM6500, RM6501, RM6502 and RM 6503 shall not exceed 0.017 pound per MMBtu of heat input and a total of 40.80 pounds per hour.

(b) Pursuant to 326 IAC 6.8-2-38, PM_{10} emissions from the 84" Hot Strip Mill Waste Heat Boilers Nos. 1 and 2 shall comply with the following:

(1) The PM_{10} emissions from the 84" Hot Strip Mill Waste Heat Boiler No. 1 Stack HB6504 shall not exceed 0.043 pound per MMBtu of heat input and 10.0 pounds per hour.

(2) The PM_{10} emissions from the 84" Hot Strip Mill Waste Heat Boiler No. 2 Stack HB6505 shall not exceed 0.043 pound per MMBtu of heat input and 10.0 pounds per hour.

(c) Each emission limit applies to one (1) stack serving one (1) facility unless otherwise noted. The emissions limitations apply to one (1) stack serving the multiple units specified when the facility description notes stack serving, and to each stack of multiple stacks serving multiple facilities when the facility description notes each stack serving.

D.10.2 Sulfur Dioxide (SO_2) Limitations [326 IAC 7-4.1-20]

Pursuant to 326 IAC 7-4.1-20, SO_2 emissions from the Reheat Furnace Nos. 1, 2, 3 and 4, RMF10500, RMF20501, RMF30502 and RMF40503 and Waste Heat Boilers Nos. 1 and 2, RB1B0508 and RB2B0509 shall comply with the following:

(a) Pursuant to 326 IAC 7-4.1-20(a)(1)(E) and (F), during periods when the coke oven gas desulfurization unit is not operating:

Emission Unit Operating Scenarios		Emission Limit lbs/MMBtu	Emission Limit lbs/hr
During periods when Reheat Furnace Nos. 1, 2, 3 and 4 are not combusting coke oven gas	Waste Heat Boiler Nos. 1 or 2	1.270	287.0
	Remaining Waste Heat Boiler	0.704	159.0
Reheat Furnace Nos. 1, 2, 3 and 4 during periods when combusting coke oven gas.	When four (4) furnaces are operating	0.256	615.0
	When three (3) furnaces are operating	0.342	615.0
	When two (2) furnaces are operating	0.513	615.0
	When one (1) furnace is operating	1.025	615.0

(b) Pursuant to 326 IAC 7-4.1-20(b)(6)(A) and (B), during periods when the coke oven gas desulfurization unit is operating:

Emission Unit Operating Scenarios		Emission Limit lbs/MMBtu	Emission Limit lbs/hr
Waste Heat Boiler Nos. 1 and 2	NA	0.260	58.8 each
Continuous Reheat Furnace Nos. 1, 2, 3 and 4	When four (4) furnaces are operating	0.182	436.5
	When three (3) furnaces are operating	0.243	436.5
	When two (2) furnaces are operating	0.354	436.5
	When one (1) furnace is operating	0.728	436.5

Compliance Determination Requirements

D.10.3 Testing Requirements [326 IAC 2-7-6(1),(6)][326 IAC 2-1.1-11]

Within 5 years after the most recent valid compliance demonstration, the Permittee shall perform PM_{10} testing on one of the Nos. 1, 2, 3 and 4 Continuous Reheat Furnace stacks RM6500, RM6501, RM6502 or RM6503 for the purpose of determining compliance with Condition D.10.1(a), using methods approved by the Commissioner. This test shall be repeated at least once every 5 years from the date of the most recent valid compliance demonstration. Testing shall be performed in accordance with provisions of 326 IAC 3-6 (Source Sampling Procedures). Section C - Performance Testing contains the Permittee's obligation with regard to the performance testing required by this condition.

D.10.4 Lake County PM10 Emissions

Compliance with the PM10 limit in Condition D.10.1(b) shall be determined with the following equation:

For PM10 Emissions limit in pounds per hour:

NG PM10 Emissions (lb/hr) = NG usage (MMCF/day) x NG PM10 EF (lb/MMCF) x 1 day/24 hours

COG PM10 Emissions (lb/hr) = COG usage (MMCF/day) x COG PM10 EF (lb/MMCF) x 1day/24 hours

Combined Fuel Total PM10 Emissions (lb/hr) = NG PM10 Emissions (lb/hr) + COG PM10 Emissions (lb/hr)

For PM10 Emissions limit in pound per MMBtu:

NG PM10 Emissions (lb/MMBtu) = NG PM10 EF (lb/MMCF) / NG heating value (MMBTU/MMCF)

COG PM10 Emissions (lb/MMBtu) = COG PM10 EF (lb/MMCF) / COG heating value (MMBTU/MMCF)

Combined Fuel Total PM10 Emissions (lb/MMBtu) = [NG Emissions (lb/MMBTU) x NG Usage (MMBTU/day) + COG Emissions (lb/MMBTU) x COG Usage (MMBTU/day)] / [NG Usage (MMBTU/day) + COG Usage (MMBTU/day)]

where:
NG = pertains to natural gas
COG = pertains to coke oven gas
EF = emission factors, using Emission Factors from AP-42, U.S. EPA FIRE, and U.S. Steel Gary Works Annual Emission Statement Report

D.10.5 Sulfur Fuel Sampling and Analysis [326 IAC 7-4.1-2]

Pursuant to 326 IAC 7-4.1-2, and in order to comply with conditions D.10.2, the Permittee shall perform Sulfur Fuel Sampling and Analysis. Section C - Sulfur Fuel Sampling and Analysis contains the Permittee's obligation with regard to the sampling and analysis required by this condition.

Record Keeping and Reporting Requirements [326 IAC 2-7-5(3)] [326 IAC 2-7-19]

D.10.6 Record Keeping Requirements

(a) To document the compliance status with Condition D.10.2, the Permittee shall maintain records in accordance with Section C - Sulfur Dioxide (SO_2) Record Keeping Requirements (Entire Source).

(b) To document the compliance status with Condition D.10.4, the Permittee shall maintain records and make available to IDEM, upon request, process and fuel use information pertaining to each emissions unit, process, or combustion unit identified in this section, including the following:

(1) Identification of the applicable limit.
(2) The amount and type of each fuel used for each facility for each calendar day of operation.
(3) The PM10 emission rate in pounds per hour (combined for all fuels).
(4) The PM10 emission rate in pounds per MMBtu (combined for all fuels).

(c) Section C - General Record Keeping Requirements contains the Permittee's obligations with regard to the records required by this condition.

D.10.7 Reporting Requirements

A quarterly summary report to document the compliance status with condition D.10.2 shall be submitted not later than thirty (30) days after the end of the quarter being reported. Section C – Sulfur Dioxide SO_2 Reporting Requirements (Entire Source) contains the Permittee's obligation with regard to the reporting required by this condition. The report submitted by the Permittee does require a certification that meets the requirements of 326 IAC 2-7-6(1) by a "responsible official" as defined by 326 IAC 2-7-1(35).

SECTION D.11 FACILITY OPERATION CONDITIONS

Emission Unit Description: Two Continuous Pickle Lines

(a) One (1) 84-inch Pickle Line, the North Continuous Pickle Line, identified as HWPO0625, constructed in 1968, with a maximum capacity of 314 tons per hour consisting of four (4) pickle tanks and two (2) rinse tanks (hot and cold). Emissions at this pickle line are controlled by a fume exhaust scrubber, HW3545 exhausting to stack HW6525.

(b) One (1) 80-inch Pickle Line, the South Continuous Pickle Line, identified as HMPO0589, constructed in 1948, with a maximum capacity of 91 tons per hour, consisting of three (3) pickle tanks and two (2) rinse tanks (hot and cold). Emissions are controlled by a fume exhaust scrubber, HM3540, exhausting to stack HM6520.

(The information describing the process contained in this facility description box is descriptive information and does not constitute enforceable conditions.)

Emission Limitations and Standards [326 IAC 2-7-5(1)]

D.11.1 Particulate (PM) Limitation [326 IAC 6.8-1-2(a)]

Pursuant to 326 IAC 6.8-1-2(a), the pickle lines shall not discharge to the atmosphere any gases which contain particulate in excess of 0.03 grains per dry standard cubic feet.

SECTION D.12 FACILITY OPERATION CONDITIONS

Emission Unit Description: Sheet Products Operations

(a) North Sheet Mill

(1) One (1) 5-Stand Cold Reduction Mill, identified as H5M50637, constructed in 1964, with a maximum capacity of 400 tons per hour, consisting of 5 Mill Stands. Emissions are controlled by fume collection H53547, exhausting to Stack H56527.

(2) Twenty-six (26) 4-Stack Box Annealing Furnaces and 50 bases, identified as HTAF0813 through HTAF0838, constructed in 1964, with a heat input capacity of 12 MMBtu per hour each. These furnaces are direct fired with emissions exhausting through vent pipes HT6530 through HT6555.

(3) One (1) 80-inch temper mill, constructed in 1964, with a maximum capacity of 250 tons per hour, with fugitive emissions.

(4) One (1) 80-inch Recoil Line, constructed in 1964, with a maximum capacity 120 tons per hour, with fugitive emissions.

(b) South Sheet Mill

(1) Seventeen (17) 8-Stack A Box Annealing furnaces and 66 bases, identified as HXBA0560 through HXBA0576, constructed in 1948. Eleven (11) furnaces have a heat input capacity of 15 MMBtu per hour each and the remaining six (6) are rated at 18 MMBtu per hour each. Emissions from these furnaces exhaust through the Roof Monitor HX6003.

(2) One (1) 2-Stand Temper Mill, identified as H2M00579, constructed in 1974, with a maximum capacity of 89 tons per hour, with fugitive emissions through Roof Monitor H26004.

(3) One (1) No. 6 East Galvanizing Line, constructed in 1962, with a maximum capacity of 48 tons an hour, with one (1) annealing furnace identified as H6F10527 with a heat input of 45 MMBtu per hour and emissions through stack H66516. Also, contains one (1) Galvanneal Furnace identified as HF20529 with a heat input capacity of 20.0 MMBtu per hour and emissions exhausting through Roof Monitor H66006.

(4) Two (2) hydrogen atmosphere batch annealing furnaces, with a total heat input capacity of 10.26 MMBtu per hour, constructed in 1997, consisting of three (3) fixed bases and two (2) movable cooling hoods.

(5) One (1) 84-inch Hot Roll Temper Mill, constructed in 1967, with a maximum capacity of 124 tons per hour, with fugitive emissions.

(6) One (1) coil prep line, constructed in 1968, with a maximum capacity of 73 tons per hour, with fugitive emissions.

(c) Electro-galvanizing Line (EGL)

(1) One (1) Electro-galvanizing Line (EGL), with one HCl pickle tank, No. 1 Pickle tank, identified as HET20685, a cleaner section, a plating section and associated scrubber, with a maximum capacity of 60.5 tons per hour. Fumes from the Pickle Section are controlled by a fume scrubber HE3583 exhausting through stack HE6563. The single sided process for this coating line was constructed in 1977 and was modified in 1993 to a double sided process for coating.

(2) One (1) natural gas fired Boiler No. 1 in the EGL Boiler House, identified as HBB10675, constructed in 1978 and modified in 2001, with a heat input capacity of 39.147 MMBtu per hour, exhausting through stack HB6559.

(The information describing the process contained in this facility description box is descriptive information and does not constitute enforceable conditions.)

Emission Limitations and Standards [326 IAC 2-7-5(1)]

D.12.1 Lake County PM_{10} Emission Requirements [326 IAC 6.8-2-38]

Pursuant to 326 IAC 6.8-2-38, the PM_{10} emissions from the EGL Boiler House shall not exceed 0.0033 pounds per MMBtu of heat input and a total of 0.13 pound per hour.

D.12.2 Particulate Emissions Limitations [326 IAC 6.8-1-2(a)]

Pursuant to 326 IAC 6.8-1-2(a), the particulate emissions from the North Sheet Mill: 5-Stand Cold Reduction Mill Stack H56527 and the South Sheet Mill: No. 6 East Galvanize Line Stack H66516 shall not exceed three-hundredths (0.03) grain per dry standard cubic foot (dscf).

D.12.3 Nitrogen Dioxide (NO_X) Emissions Offset Limitations [326 IAC 2-3]

Pursuant to CP 089-8606-00121, issued October 20, 1997, the natural gas usage in the two (2) hydrogen atmosphere batch annealing furnaces shall not exceed 37.2 million cubic feet (MMCF) per 12 consecutive month period with compliance demonstrated at the end of each month. This production limitation is equivalent to NO_X emissions of 2.64 tons per 12 consecutive month period with compliance demonstrated at the end of each month. Therefore, the Emission Offset rule, 326 IAC 2-3, does not apply.

D.12.4 Sulfur Dioxide (SO_2) Limitations [326 IAC 7-4.1-20(c)(3)]

Pursuant to 326 IAC 7-4.1-20(c)(3) gaseous fuel sources shall burn natural gas only:

(a) if it is not listed in 326 IAC 7-4.1-20; or

(b) under an operating condition not specifically listed in 326 IAC 7-4.1-20.

Record Keeping and Reporting Requirements [326 IAC 2-7-5(3)] [326 IAC 2-7-19]

D.12.5 Record Keeping Requirements

(a) Pursuant to Minor Source Modification 089-14424-00121, issued August 2, 2001 (modified by MSM 089-15694-00121, issued August 21, 2002), and 40 CFR 60.40c the Permittee shall record and maintain monthly records of the amounts of fuel combusted for the one (1) 39.147 million British thermal units per hour (MMBtu/hr) natural gas fired boiler, identified as EGL-1 boiler.

(b) Pursuant to Minor Source Modification 089-8606-00121, issued October 20, 1997 and to document the compliance status with Condition D.12.3 the Permittee shall maintain monthly records of the natural gas usage in the two (2) hydrogen atmosphere batch annealing furnaces.

(c) Section C - General Record Keeping Requirements contains the Permittee's obligations with regard to the records required by this condition.

D.12.6 Reporting Requirements

(a) Pursuant to Minor Source Modification 089-8606-00121, issued October 20, 1997 and to document the compliance status with Condition D.12.3 the Permittee shall submit not later than thirty (30) days after the end of the quarter being reported, the hydrogen atmosphere batch annealing furnaces monthly natural gas usage.

(b) Section C - General Reporting Requirements contains the Permittee's obligation with regard to the reporting required by this condition.

(c) The reports submitted by the Permittee do require a certification that meets the requirements of 326 IAC 2-7-6(1) by a “responsible official” as defined by 326 IAC 2-7-1(35).

SECTION D.13 FACILITY OPERATION CONDITIONS

Emission Unit Description: Tin Products Operations

(a) One (1) 6-Stand Cold Reduction Mill, identified as TRM00709, constructed in 1967, with a maximum capacity of 150 tons per hour. Emissions are controlled by a mist eliminator TR3600, exhausting to stack TR6575.

(b) One (1) cleaning line, identified as No. 7 Cleaning Line, constructed in 1967, with a maximum capacity of 80 tons per hour. Fumes are controlled by a fume scrubber exhausting to a stack.

(c) Two (2) Annealing Lines, No. 1 and No. 2, each containing an annealing furnace, identified as T1AF0794 and T2AF0799, No. 1 constructed in 1950 and No. 2 constructed in 1959, with a maximum heat input capacities of 32 and 35 MMBtu per hour, respectively. Emissions exhaust to stacks T16609 and T26610. The No. 2 Continuous Anneal Line has a cleaning section with fumes collected in a fume scrubber exhausting through a stack.

(d) Five (5) 4-Stack A Box Annealing Furnaces and 12 bases, identified as TXAF0765 through TXAF0769, constructed in 1968. All furnaces have a heat input of 10.5 MMBtu per hour each. Emissions exhaust to stacks TX6580 through TX6584.

(e) One (1) 48-inch Temper Mill, constructed in 1958, with a maximum capacity of 150 tons per hour, with fugitive emissions. This unit has a dust filter that exhausts inside the building.

(f) One (1) Double Reduction Mill with two (2) mill stands, identified as TDMO0742, constructed in 1963, with a maximum capacity of 75 tons per hour. Emissions are controlled by a mist eliminator D3603, exhausting to stack TD6595.

(g) One (1) No. 1 Tin Free Steel Line (TFS), constructed in 1950, with a maximum capacity of 24 tons per hour. The chemical treatment rinse section, TFR00753 exhaust through stack TF6597 and all other fugitive emissions from the line to roof monitor TF6661.

(h) One (1) No. 5 Electrolytic Tinning Line 5 (ETL), constructed in 1957, and with a maximum capacity of 50 tons per hour. The No. 5 ETL contains a Plating and Chemical Treatment Tank, identified as TFR00777, with fugitive emissions through Roof Monitor T56071.

(i) One (1) No. 6 Electrolytic Tinning Line (6 ETL), constructed in 1966, with a maximum capacity of 120 tons per hour. The 6 ETL also contains a Plating and Chemical Treatment Tank, identified as T6H00786, with fugitive emissions through Roof Monitor T56071.

(j) One (1) Tin Anode Caster, constructed in 1965, with a maximum capacity of 0.57 tons per hour, with fugitive emissions through roof monitor.

(k) One (1) Tin Mill Recoil and inspection Line, constructed in 1967, with a maximum capacity of 14.8 tons per hour.

(l) One (1) 45” Side Trimmer, constructed in 1961, with fugitive emissions through the roof monitor.

(The information describing the process contained in this facility description box is descriptive information and does not constitute enforceable conditions.)

Emission Limitations and Standards [326 IAC 2-7-5(1)]

D.13.1 Particulate Emissions Limitations [326 IAC 6.8-1-2(a)]

Pursuant to 326 IAC 6.8-1-2(a), the particulate emissions shall not exceed three-hundredths (0.03) grain per dry standard cubic feet (gr/dscf) from the following:

(a) 6-Stand Cold Reduction Mill Stack TR6575,

(b) One (1) Double Reduction Mill Stack TD6595, and

(c) No. 1 Tin Free Steel Line Chemical Treatment Rinse Stack TF6597.

D.13.2 Sulfur Dioxide (SO_2) Limitations [326 IAC 7-4.1-20(c)(3)]

Pursuant to 326 IAC 7-4.1-20(c)(3) gaseous fuel sources shall burn natural gas only:

(a) if it is not listed in 326 IAC 7-4.1-20; or

(b) under an operating condition not specifically listed in 326 IAC 7-4.1-20.

Record Keeping and Reporting Requirements [326 IAC 2-7-5(3)] [326 IAC 2-7-19]

D.13.3 Record Keeping Requirements

(a) In order to document the compliance status with conditions D.13.1 and D.13.2, the Permittee shall maintain records of the natural gas usage of the furnaces.

(b) Section C - General Record Keeping Requirements contains the Permittee's obligations with regard to the records required by this condition.

SECTION D.14 FACILITY OPERATION CONDITIONS

Emission Unit Description: Boiler House No. 4

(a) Two (2) Boilers, No. 1 and No. 2, identified as O4B10459 and O4B20460, constructed in 1967, equipped to combust natural gas, blast furnace gas and fuel oil, with a maximum heat input of 500 MMBtu per hour each, exhausting through Stacks O46268 and O46269, respectively.

(b) One (1) Boiler, No. 3, identified as O4B30461, constructed in 1967, equipped to combust blast furnace gas and natural gas, with a maximum heat input of 500 MMBtu per hour, exhausting through Stack O46270.

(The information describing the process contained in this facility description box is descriptive information and does not constitute enforceable conditions.)

Emission Limitations and Standards [326 IAC 2-7-5(1)]

D.14.1 Lake County PM_{10} Emission Requirements [326 IAC 6.8-2-38]

Pursuant to 326 IAC 6.8-2-38, the PM_{10} emissions from the No. 4 Boiler House Boilers Nos. 1, 2 and 3 Stacks O46268, O46269 and O46270 shall comply with the following:

(a) The PM_{10} emissions from the Number 4 Boiler House Boilers, when one or two boilers are operating shall not exceed 0.054 pounds per MMBtu of heat input and a total of 54.1 pounds per hour.

(b) The PM_{10} emissions from the Number 4 Boiler House Boilers, when three boilers are operating shall not exceed 0.036 pounds per MMBtu of heat input and a total of 54.1 pounds per hour.

(c) Each emission limit applies to one (1) stack serving one (1) facility unless otherwise noted. The emissions limitations apply to one (1) stack serving the multiple units specified when the facility description notes stack serving, and to each stack of multiple stacks serving multiple facilities when the facility description notes each stack serving.

D.14.2 Sulfur Dioxide (SO_2) Limitations [326 IAC 7-4.1-20]

Pursuant to 326 IAC 7-4.1-20, the SO_2 emissions from the No. 4 Boiler House Boilers Nos. 1, 2 and 3 Stacks O46268, O46269 and O46270 shall not exceed the following limitations:

(a) Pursuant to 326 IAC 7-4.1-20(a)(1)(B), during periods when the coke oven gas desulfurization unit is not operating:

Emission Unit Operating Scenarios		Emission Limit lbs/MMBtu	Emission Limit lbs/hr
During periods when No. 14 Blast Furnace Stoves are combusting blast furnace gas	When three (3) boilers are operating:	0.115	172.5 total
	When two (2) boilers are operating:	0.173	172.5 total
	When one (1) boiler is operating:	0.345	172.5 total

Emission Unit Operating Scenarios		Emission Limit lbs/MMBtu	Emission Limit lbs/hr
During periods when No. 14 Blast Furnace Stoves are not combusting blast furnace gas and the Hot Strip Mill Waste Heat Boilers Nos. 1 and 2 are combusting coke oven gas :	When three (3) boilers are operating:	0.200	300.0 total
	When two (2) boilers are operating:	0.300	300.0 total
	When one (1) boiler is operating:	0.600	300.0 total
During periods when No. 14 Blast Furnace Stoves are not combusting blast furnace gas and the Hot Strip Mill Waste Heat Boilers Nos. 1 and 2 are not combusting coke oven gas :	When three (3) boilers are operating:	0.195	293.0 total
	When two (2) boilers are operating:	0.293	293.0 total
	When one (1) boiler is operating:	0.586	293.0 total

(b) Pursuant to 326 IAC 7-4.1-20(b)(2), during periods when the coke oven gas desulfurization unit is operating:

Emission Limit lbs/hr	Emission Limit lbs/MMBtu	Emission Limit lbs/hr
When three (3) boilers are operating:	0.353	529.0 total
When two (2) boilers are operating:	0.529	529.0 total
When one (1) boiler is operating:	1.058 total	529.0 total

Compliance Determination Requirements

D.14.3 Sulfur Fuel Sampling and Analysis [326 IAC 7-4.1-2]

Pursuant to 326 IAC 7-4.1-2, and in order to comply with conditions D.14.1, the Permittee shall perform Sulfur Fuel Sampling and Analysis. Section C - Sulfur Fuel Sampling and Analysis contains the Permittee's obligation with regard to the sampling and analysis required by this condition.

D.14.4 Lake County PM10 Emissions

Compliance with the PM10 limit in Condition D.14.1 shall be determined with the following equation:

For PM10 Emissions limit in pound per hour:

NG PM10 Emissions (lb/hr) = NG usage (MMCF/day) x NG PM10 EF (lb/MMCF) x 1 day/24 hours

FO PM10 Emissions (lb/hr) = FO usage (kgal/day) x FO PM10 EF (lb/kgal) x 1day/24 hours

BFG PM10 Emissions (lb/hr) = BFG input (MMBtu/day) x BFG PM10 EF (lb/MMBtu) x 1day/24 hours

Combined Fuel Total PM10 Emissions (lb/hr) = NG PM10 Emissions (lb/hr) + FO PM10 Emissions (lb/hr) + BFG PM10 Emissions (lb/hr)

For PM10 Emissions limit in pound per MMBtu:

NG PM10 Emissions (lb/MMBtu) = NG PM10 EF (lb/MMCF) / NG heating value (MMBTU/MMCF)

FO PM10 Emissions (lb/MMBtu) = FO PM10 EF (lb/kgal) / FO heating value (MMBTU/kgal)

BFG PM10 Emissions (lb/MMBtu) = BFG PM10 EF (lb/MMCF) / BFG heating value (MMBTU/MMCF)

Combined Fuel Total PM10 Emissions (lb/MMBtu) = [NG Emissions (lb/MMBTU) x NG Usage (MMBTU/day) + FO Emissions (lb/MMBTU) x FO Usage (MMBTU/day) + BFG Emissions (lb/MMBTU) x BFG Usage (MMBTU/day)] / [NG Usage (MMBTU/day) + FO Usage (MMBTU/day) + BFG Usage (MMBTU/day)]

where:
NG = pertains to natural gas
FO = pertains to fuel oil
BFG = pertains to blast furnace gas
EF = emission factors, using Emission Factors from AP-42, U.S. EPA FIRE and U.S. Steel Gary Works Annual Emission Statement Report

Compliance Monitoring Requirements [326 IAC 2-7-6(1)] [326 IAC 2-7-5(1)]

D.14.5 Visible Emission Notations

When Boilers No. 1 and/or No. 2 combust fuel oil or any combination of fuel oil and natural gas or blast furnace gas:

(a) Visible emission notations of the Boilers No. 1 stack O46268 and/or No. 2 stack O46269 shall be performed once per day during normal daylight operations when exhausting to the atmosphere. A trained employee shall record whether emissions are normal or abnormal.

(b) For processes operated continuously, "normal" means those conditions prevailing, or expected to prevail, eighty percent (80%) of the time the process is in operation, not counting startup or shut down time.

(c) In the case of batch or discontinuous operations, readings shall be taken during that part of the operation that would normally be expected to cause the greatest emissions.

(d) A trained employee is an employee who has worked at the plant at least one (1) month and has been trained in the appearance and characteristics of normal visible emissions for that specific process.

(e) If abnormal emissions are observed, the Permittee shall take a reasonable response. Section C - Response to Excursions or Exceedances contains the Permittee's obligation with regard to the reasonable response steps required by this condition. Failure to take response steps shall be considered a deviation of this permit.

Record Keeping Requirements [326 IAC 2-7-5(3)] [326 IAC 2-7-19]

D.14.6 Record Keeping Requirements

(a) To document the compliance status with Condition D.14.2, the Permittee shall maintain records in accordance with Section C - Sulfur Dioxide (SO_2) Record Keeping Requirements (Entire Source).

(b) To document the compliance status with Condition D.14.4, the Permittee shall maintain records and make available to IDEM, upon request, process and fuel use information pertaining to each emissions unit, process, or combustion unit identified in this section, including the following:

(1) Identification of the applicable limit.
(2) The amount and type of each fuel used for each facility for each calendar day of operation.
(3) The hourly PM10 emission rate in pounds per hour (combined for all fuels).
(4) The hourly PM10 emission rate in pounds per MMBtu (combined for all fuels).

(c) To document the compliance status with Conditions D.14.5, the Permittee shall maintain records of the once per day visible emission notations when Boilers No. 1 and/or No. 2 combust fuel oil or any combination of fuel oil and natural gas or blast furnace gas.

(d) Section C - General Record Keeping Requirements contains the Permittee's obligations with regard to the records required by this condition.

D.14.7 Reporting Requirements

A quarterly summary report to document the compliance status with conditions D.14.2 shall be submitted in accordance with Section C – Sulfur Dioxide Reporting Requirements (Entire Source) of this permit. Section C - General Reporting contains the Permittee’s obligation with regard to the reporting required by this condition. This report does require a certification that meets the requirements of 326 IAC 2-7-6(1) by a "responsible official" as defined by 326 IAC 2-7-1(35).

SECTION D.15 FACILITY OPERATION CONDITIONS

Emission Unit Description: TurboBlower Boiler House (TBBH)

(a) Three (3) Boilers, No. 1, No. 2 and No. 3, identified as OTB10462, OTB20463 and OTB30464, constructed in 1948, equipped to combust blast furnace gas, coke oven gas, fuel oil and natural gas, with a maximum heat input of 410 MMBtu per hour each, exhausting through Stacks OT6271, OT6272 and OT6273, respectively.

(b) One (1) Boiler No. 5, identified as OTB50466, constructed in 1958, equipped to combust blast furnace gas, coke oven gas, fuel oil and natural gas, with a maximum heat input of 410 MMBtu per hour, exhausting through Stack OT6275.

(c) One (1) boiler, No. 6, identified as OTB60467, constructed after August 17, 1971, equipped to combust blast furnace gas and natural gas, with a maximum heat input capacity of 710 MMBtu per hour, exhausting through Stack OT6276.

(The information describing the process contained in this facility description box is descriptive information and does not constitute enforceable conditions.)

Emission Limitations and Standards [326 IAC 2-7-5(1)]

D.15.1 Lake County PM_{10} Emissions Requirements [326 IAC 6.8-2-38]

Pursuant to 326 IAC 6.8-2-38, the PM_{10} emissions from the TBBH Boilers Nos. 1, 2, 3, 5 and 6 Stacks OT6271, OT6272, OT6273, OT6275 and OT6276 shall comply with the following:

(a) The PM_{10} emissions from the TBBH Boilers Nos. 1, 2, 3 and 5: OT6271, OT6272, OT6273 and OT6275, when four boilers are operating, shall not exceed 0.037 pound per MMBtu of heat input each and a total of 61.0 pounds per hour.

(b) The PM_{10} emissions from the TBBH Boilers Nos. 1, 2, 3 and 5: OT6271, OT6272, OT6273 and OT6275, when three boilers are operating, shall not exceed 0.050 pound per MMBtu of heat input each and a total of 61.0 pounds per hour.

(c) The PM_{10} emissions from the TBBH Boilers Nos. 1, 2, 3 and 5: OT6271, OT6272, OT6273 and OT6275, when one or two boilers are operating, shall not exceed 0.074 pound per MMBtu of heat input each and a total of 61.0 pounds per hour.

(d) The PM_{10} emissions from the TBBH Boiler No. 6 Stack OT6276, shall not exceed 0.039 pound per MMBtu of heat input and 27.80 pounds per hour.

(e) Each emission limit applies to one (1) stack serving one (1) facility unless otherwise noted. The emissions limitations apply to one (1) stack serving the multiple units specified when the facility description notes stack serving, and to each stack of multiple stacks serving multiple facilities when the facility description notes each stack serving.

D.15.2 Sulfur Dioxide (SO_2) Limitations [326 IAC 7-4.1-20]

Pursuant to 326 IAC 7-4.1-20, the SO_2 emissions from each of the TBBH Boilers Nos. 1, 2, 3, 5 and 6 Stacks OT6271, OT6272, OT6273, OT6275 and OT6276 shall not exceed the following limitations:

(a) Pursuant to 326 IAC 7-4.1-20(a)(1)(A) and (b)(1)(B), the sulfur dioxide emissions from the No. 6 Boiler Stack shall not exceed 0.115 lbs/MMBtu and 81.7 lbs/hr.

(b) Pursuant to 326 IAC 7-4.1-20(a)(2)(A)(i), the sulfur dioxide emissions from the Nos. 1, 2, 3 and 5 Boiler stacks shall not exceed the following during periods when the coke oven gas desulfurization unit is not operating and the Hot Strip Mill Waste Heat Boiler Nos. 1 and 2 are not combusting coke oven gas:

Emission Unit Operating Scenarios		Emission Limit lbs/MMBtu	Emission Limit lbs/hr
Jan - Apr	When four (4) boilers are operating:	0.594	974.5 total
	When three (3) boilers are operating:	0.792	974.5 total
	When two (2) boilers are operating:	1.188	974.5 total
May - Oct	When four (4) boilers are operating:	1.006	1650.0 total
	When three (3) boilers are operating:	1.341	1650.0 total
	When two (2) boilers are operating:	2.012	1650.0 total
Nov - Dec	When four (4) boilers are operating:	0.384	630.0 total
	When three (3) boilers are operating:	0.512	630.0 total
	When two (2) boilers are operating:	0.768	630.0 total

(c) Pursuant to 326 IAC 7-4.1-20(a)(2)(A)(ii), the sulfur dioxide emissions from the Nos. 1, 2, 3 and 5 Boiler stacks shall not exceed the following during periods when the coke oven gas desulfurization unit is not operating and the Hot Strip Mill Waste Heat Boiler Nos. 1 and 2 are combusting coke oven gas:

Emission Unit Operating Scenarios		Emission Limit lbs/MMBtu	Emission Limit lbs/hr
Jan - Apr	When four (4) boilers are operating:	0.625	1025.00 total
	When three (3) boilers are operating:	0.833	1025.00 total
	When two (2) boilers are operating:	1.250	1025.00 total

Emission Unit Operating Scenarios		Emission Limit lbs/MMBtu	Emission Limit lbs/hr
May - Oct	When four (4) boilers are operating:	0.994	1630.0 total
	When three (3) boilers are operating:	1.325	1630.0 total
	When two (2) boilers are operating:	1.988	1630.0 total
Nov - Dec	When four (4) boilers are operating:	0.351	575.0 total
	When three (3) boilers are operating:	0.467	575.0 total
	When two (2) boilers are operating:	0.701	575.0 total

(d) Pursuant to 326 IAC 7-4.1-20(b)(1)(A), the sulfur dioxide emissions from the Nos. 1, 2, 3 and 5 Boiler stacks shall not exceed the following during periods when the coke oven gas desulfurization unit is operating:

Emission Limit lbs/hr	Emission Limit lbs/MMBtu	Emission Limit lbs/hr
When four (4) boilers are operating:	0.427	700.0 total
When three(3) boilers are operating:	0.569	700.0 total
When two (2) boilers are operating:	0.854	700.0 total

D.15.3 PSD Nitrogen Oxides (NO_X) Emission Offset Limitations [326 IAC 2-2] [326 IAC 2-3]

Pursuant to the Minor Source Modification 089-10160-00121 issued, January 13, 2000, 326 IAC 2-2 and 326 IAC 2-3, the NO_X emissions for the TBBH Boiler No. 6 Stack OT6276 shall be limited to the following:

(a) Boiler No. 6 NO_X emissions shall not exceed 0.14 pounds of NO_X per MMBtu of heat input.

(b) Natural gas usage shall be limited to 1,059.7 million cubic feet (MMCF) per twelve (12) consecutive month period with compliance demonstrated at the end of each month. Compliance with this limit will also preclude the Permittee from the requirement to install a continuous emissions monitor (CEM) for NO_X.

(c) Blast furnace gas and natural gas shall be the only fuels combusted in TBBH Boiler No. 6, unless the Permittee receives prior approval from IDEM, OAQ to combust coke oven gas or fuel oil.

(d) These limitations will ensure that the requirements of 326 IAC 2-2 (Prevention of Significant Deterioration) and 326 IAC 2-3 (Emission Offset) do not apply.

D.15.4 Nitrogen Oxides (NO_X) Limitations

Pursuant to Minor Source Modification 089-10160-00121, issued January 13, 2000, 326 IAC 12 and 40 CFR 60, Subpart D (Standards of Performance for Fossil-Fuel-Fired Steam Generators for Which Construction or modification is Commenced After August 17, 1971), NO_X emissions from the Turboblower Boiler House (TBBH) Boiler No. 6 Stack OT6276 shall not exceed 0.20 pound per MMBtu of heat input, when the boiler is burning natural gas only.

Compliance Determination Requirements

D.15.5 Lake County PM10 Emissions

Compliance with the PM10 limit in Condition D.15.1 shall be determined with the following equation:

For PM10 Emissions limit in pound per hour:

NG PM10 Emissions (lb/hr) = NG throughput/usage (MMCF/day) x NG PM10 EF (lb/MMCF) x 1 day/24 hours

FO PM10 Emissions (lb/hr) = FO throughput/usage (kgal/day) x FO PM10 EF (lb/kgal) x 1day/24 hours

BFG PM10 Emissions (lb/hr) = BFG input (MMBtu/day) x BFG PM10 EF (lb/MMBtu) x 1day/24 hours

COG PM10 Emissions (lb/hr) = COG throughput/usage (MMCF/day) x COG PM10 EF (lb/MMCF) x 1 day/24 hrs

Combined Fuel Total PM10 Emissions (lb/hr) = NG PM10 Emissions (lb/hr) + FO PM10 Emissions (lb/hr) + BFG PM10 Emissions (lb/hr) + COG PM10 Emissions (lb/hr)

For PM10 Emissions limit in pound per MMBtu:

NG PM10 Emissions (lb/MMBtu) = NG PM10 EF (lb/MMCF) / NG heating value (MMBTU/MMCF)

FO PM10 Emissions (lb/MMBtu) = FO PM10 EF (lb/kgal) / FO heating value (MMBTU/kgal)

BFG PM10 Emissions (lb/MMBtu) = BFG PM10 EF (lb/MMCF) / BFG heating value (MMBTU/MMCF)

COG PM10 Emissions (lb/MMBtu) = COG PM10 EF (lb/MMCF) / COG heating value (MMBTU/MMCF)

Combined Fuel Total PM10 Emissions (lb/MMBtu) = [NG Emissions (lb/MMBTU) x NG Usage (MMBTU/day) + FO Emissions (lb/MMBTU) x FO Usage (MMBTU/day) + BFG Emissions (lb/MMBTU) x BFG Usage (MMBTU/day) + COG Emissions (lb/MMBTU) x COG Usage (MMBTU/day)] / [NG Usage (MMBTU/day) + FO Usage (MMBTU/day) + BFG Usage (MMBTU/day) + COG Usage (MMBTU/day)]

where:
NG = pertains to natural gas
FO = pertains to fuel oil
BFG = pertains to blast furnace gas
COG = pertains to coke oven gas
EF = emission factors, using Emission Factors from AP-42, U.S. EPA FIRE and U.S. Steel Gary Works Annual Emission Statement Report

D.15.6 Sulfur Fuel Sampling and Analysis [326 IAC 7-4.1-2]

Pursuant to 326 IAC 7-4.1-2, and in order to comply with conditions D.15.2, the Permittee shall perform Sulfur Fuel Sampling and Analysis. Section C - Sulfur Fuel Sampling and Analysis contains the Permittee's obligation with regard to the sampling and analysis required by this condition.

Compliance Monitoring Requirements [326 IAC 2-7-6(1)] [326 IAC 2-7-5(1)]

D.15.7 Visible Emission Notations

When any one or combination of Boilers No. 1, No. 2, No. 3 and No. 5 combust fuel oil or any combination of fuel oil, and natural gas, blast furnace gas or coke oven gas:

(a) Visible emission notations of the Boilers No. 1, No. 2, No. 3 and/or No. 5 stacks OT6271, OT6372, OT6273 and OT6275 shall be performed once per day during normal daylight operations when exhausting to the atmosphere. A trained employee shall record whether emissions are normal or abnormal.

(b) For processes operated continuously, "normal" means those conditions prevailing, or expected to prevail, eighty percent (80%) of the time the process is in operation, not counting startup or shut down time.

(c) In the case of batch or discontinuous operations, readings shall be taken during that part of the operation that would normally be expected to cause the greatest emissions.

(d) A trained employee is an employee who has worked at the plant at least one (1) month and has been trained in the appearance and characteristics of normal visible emissions for that specific process.

(e) If abnormal emissions are observed, the Permittee shall take a reasonable response. Section C - Response to Excursions or Exceedances contains the Permittee’s obligation with regard to the reasonable response steps required by this condition. Failure to take response steps shall be considered a deviation of this permit.

Record Keeping and Reporting Requirements [326 IAC 2-7-5(3)] [326 IAC 2-7-19]

D.15.8 Record Keeping Requirements

(a) To document the compliance status with Condition D.15.2, the Permittee shall maintain records in accordance with Section C - Sulfur Dioxide (SO_2) Record Keeping Requirements (Entire Source).

(b) To document the compliance status with condition D.15.3(b), the Permittee shall maintain records of the TBBH Boiler No. 6, natural gas usage.

(c) To document the compliance status with Condition D.15.5, the Permittee shall maintain records and make available to IDEM, upon request, process and fuel use information pertaining to each emissions unit, process, or combustion unit identified in this section, including the following:

(1) Identification of the applicable limit.
(2) The amount and type of each fuel used for each facility for each calendar day of operation.
(3) The hourly PM10 emission rate in pounds per hour (combined for all fuels).
(4) The hourly PM10 emission rate in pounds per MMBtu (combined for all fuels).

(d) To document the compliance status with Conditions D.15.7, the Permittee shall maintain records of once per day visible emission notations when any one or combination of Boilers No. 1, No. 2, No. 3 and/or No. 5 combust fuel oil or any combination of fuel oil and natural gas, blast furnace gas or coke oven gas.

(e) Section C - General Record Keeping Requirements contains the Permittee's obligations with regard to the records required by this condition.

D.15.9 Reporting Requirements

(a) To document the compliance status with conditions D.15.2, the Permittee shall submit a quarterly summary report as specified in Section C – Sulfur Dioxide Reporting (Entire Source) in this permit.

(b) To document the compliance status with condition D.15.3(b), the Permittee shall submit a report not later than thirty (30) days of the end of the quarter containing the TBBH Boiler No. 6, natural gas usage using the form at the end of this permit or its equivalent.

(c) Section C - General Reporting Requirements contains the Permittee’s obligation with regard to the reporting required by this condition.

(d) These reports do require a certification that meets the requirements of 326 IAC 2-7-6(1) by a "responsible official" as defined by 326 IAC 2-7-1(35).

SECTION D.16 FACILITY OPERATION CONDITIONS

Emission Unit Description:

Fugitive Dust Sources consisting of, but not limited to the following:

(a) Paved Roads and Parking Lots

(b) Unpaved Roads and Parking Lots

(c) Batch Transfer-Loading and Unloading Operations

(d) Continuous Transfer In and Out of Storage Piles

(e) Batch Transfer Operations-Slag and Kish Handling

(f) Wind Erosion from Storage Piles and Open Areas

(g) In Plant Transfer by Truck or Rail

(h) In Plant Transfer by Front End Loader or Skip Hoist

(i) Material Processing Facility

(j) Crusher Fugitive Emissions

(k) Material Processing Facility Building Openings

(l) Dust Handling Equipment

(The information describing the process contained in this facility description box is descriptive information and does not constitute enforceable conditions.)

Emission Limitations and Standards [326 IAC 2-7-5(1)]

D.16.1 Particulate Matter (PM) Lake County Fugitive Dust Limits [326 IAC 6.8-10-4]

Pursuant to 326 IAC 6.8-10-4 (1) (Lake County Fugitive Particulate Matter Control Requirements), compliance with the opacity limits specified in Section C - Fugitive Dust Emissions shall be achieved by controlling fugitive particulate matter emissions according to the revised Fugitive Dust Control Plan (FDCP) submitted on March 1, 2003 (See Attachment A). If it is determined that the control procedures specified in the FDCP do not demonstrate compliance with the fugitive emission limitations, IDEM, OAQ may request that the FDCP be revised and submitted for approval. parmesean

Compliance Determination Requirements

D.16.2 Particulate Matter Control

Pursuant to 326 IAC 6.8-10-3 (Lake County Fugitive Particulate Matter Control Requirements), opacity from the activities shall be determined as follows:

(a) Paved Roads and Parking Lots
The average instantaneous opacity shall be the average of twelve (12) instantaneous opacity readings, taken for four (4) vehicle passes, consisting of three (3) opacity readings for each vehicle pass. The three (3) opacity readings for each vehicle pass shall be taken as follows:

(1) The first will be taken at the time of emission generation.

(2) The second will be taken five (5) seconds later.

(3) The third will be taken five (5) seconds later or ten (10) seconds after the first.

The three (3) readings shall be taken at the point of maximum opacity. The observer shall stand approximately fifteen (15) feet from the plume and at approximately right angles to the plume. Each reading shall be taken approximately four (4) feet above the surface of the roadway or parking area.

(b) Unpaved Roads and Parking Lots
The fugitive particulate emissions from unpaved roads shall be controlled by the implementation of a work program and work practice under the fugitive dust control plan.

(c) Batch Transfer
The average instantaneous opacity shall consist of the average of three (3) opacity readings taken five (5) seconds, ten (10) seconds, and fifteen (15) seconds after the end of one (1) batch loading or unloading operation. The three (3) readings shall be taken at the point of maximum opacity. The observer shall stand approximately fifteen (15) feet from the plume and at approximately right angles to the plume.

(d) Continuous Transfer
The opacity shall be determined using 40 CFR 60, Appendix A, Method 9. The opacity readings shall be taken at least four (4) feet from the point of origin.

(e) Wind Erosion from Storage Piles and Exposed Areas
The opacity shall be determined using 40 CFR 60, Appendix A, Method 9, except that the opacity shall be observed at approximately four (4) feet from the surface at the point of maximum opacity. The observer shall stand approximately fifteen (15) feet from the plume and at approximately right angles to the plume. The limitations may not apply during periods when application of fugitive particulate control measures is either ineffective or unreasonable due to sustained very high wind speeds. During such periods, the company must continue to implement all reasonable fugitive particulate control measures and maintain records documenting the application of measures and the basis for a claim that meeting the opacity limitation was not reasonable given prevailing wind conditions.

(f) Material Transported by Truck or Rail
Compliance with this limitation shall be determined by 40 CFR 60, Appendix A, Method 22, except that the observation shall be taken at approximately right angles to the prevailing wind from the leeward side of the truck or railroad car. Material transported by truck or rail that is enclosed and covered shall be considered in compliance with the in plant transportation requirement.

(g) Material Transported by Front End Loader or Skip Hoist
Compliance with this limitation shall be determined by the average of three (3) opacity readings taken at five (5) second intervals. The three (3) opacity readings shall be taken as follows:

(1) The first will be taken at the time of emission generation.

(2) The second will be taken five (5) seconds later.

(3) The third will be taken five (5) seconds later or ten (10) seconds after the first.

The three (3) readings shall be taken at the point of maximum opacity. The observer shall stand at least fifteen (15) feet from the plume approximately and at right angles to the plume. Each reading shall be taken approximately four (4) feet above the surface of the roadway or parking area.

(h) Material Processing Limitations

(1) Compliance with stack opacity limitations from material processing facilities shall be determined using 40 CFR 60, Appendix A, Method 9.

(2) Compliance with the opacity limitations for fugitive particulate emissions from material processing equipment, except from a crusher at which a capture system is not used, shall be determined using 40 CFR 60, Appendix A, Method 9.

(3) Compliance with the opacity limitations for fugitive particulate emissions from a crusher at which a capture system is not used, shall be determined using 40 CFR 60, Appendix A, Method 9.

(4) Compliance with the opacity limitations for fugitive particulate emissions from a building enclosing all or part of the material processing equipment, except from a vent in the building shall be determined using 40 CFR 60, Appendix A, Method 22.

(5) Compliance with the opacity limitations for fugitive particulate emissions from building vents shall be determined using 40 CFR 60, Appendix A, Method 5 or 17 or 40 CFR 60, Appendix A, Method 9.

(i) Dust Handling Equipment
Compliance with this standard shall be determined by 40 CFR 60, Appendix A, Method 9.

Record Keeping and Reporting Requirement [326 IAC 2-7-5(3)] [326 IAC 2-7-19]

D.16.3 Record Keeping Requirements

Pursuant to 326 IAC 6.8-10-4(4) (Lake County Fugitive Particulate Matter Control Requirements):

(a) The source shall keep the following documentation to show compliance with each of its control measures and control practices:

(1) A map or diagram showing the location of all emission sources controlled, including the location, identification, length, and width of roadways.

(2) For each application of water or chemical solution to roadways, the following shall be recorded:

(A) The name and location of the roadway controlled

(B) Application rate

(C) Time of each application

(D) Width of each application

(E) Identification of each method of application

(F) Total quantity of water or chemical used for each application

(G) For each application of chemical solution, the concentration and identity of the chemical

(H) The material data safety sheets for each chemical

(3) For application of physical or chemical control agents not covered by clause (B), the following:

(A) The name of the agent

(B) Location of application

(C) Application rate

(D) Total quantity of agent used

(E) If diluted, percent of concentration

(F) The material data safety sheets for each chemical

(4) A log recording incidents when control measures were not used and a statement of explanation.

(5) Copies of all records required by this section shall be submitted to the department within twenty (20) working days of a written request by the department.

(b) Section C - General Record Keeping Requirements contains the Permittee's obligations with regard to the records required by this condition.

D.16.4 Reporting Requirements

(a) Pursuant to 326 IAC 6.8-10-4(4)(G) (Lake County Fugitive Particulate Matter Control Requirements), a quarterly report shall be submitted to the department stating the following:

(1) The dates any required control measures were not implemented

(2) A listing of those control measures

(3) The reasons that the control measures were not implemented

(4) Any corrective action taken

(b) These reports shall be submitted not later thirty (30) calendar days following the end of the quarter being reported. Section C – General Reporting Requirements contains the Permittee’s obligation with regard to the reporting required by this condition.

Section D.17 **FACILITY OPERATION CONDITIONS**

Emission Unit Description: Insignificant activities as follows:

(a) Specifically regulated insignificant activities:

(1) Degreasing operations that do not exceed 145 gallons per 12 months, except if subject to 326 IAC 20-6. [326 IAC 8-3-5][326 IAC 8-3-6][326 IAC 8-9-1]

(2) Cleaners and solvents characterized as follows:

(A) Having a vapor pressure equal to or less than 2 kPa; 15 mm Hg; or 0.3 psi measured at 38°C (100°F) or;

(B) Having a vapor pressure equal to or less than 0.7 kPa; 5mm Hg; or 0.1 psi measured at 20°C (68°F); the use of which for all cleaners and solvents combined does not exceed 145 gallons per 12 months.[326 IAC 8-3-5][326 IAC 8-3-6][326 IAC 8-9-1]

(3) The following VOC and HAP storage containers:

(A) Storage tanks with capacity less than or equal to 1,000 gallons and annual throughput less than 12,000 gallons. [326 IAC 8-9-1]

(B) Vessels storing lubricating oils, hydraulic oils, machining oils, and machining fluids. [326 IAC 8-9-1]

(4) The following equipment related to manufacturing activities not resulting in the emission of HAPs: brazing equipment, cutting torches, soldering equipment, welding equipment. [326 IAC 6.8-10-3]

(5) Any of the following structural steel and bridge fabrication activities:

(A) Cutting 200,000 linear feet or less of one inch (10) plate or equivalent.

(B) Using 80 tons or less of welding consumables. [326 IAC 6.8-10-3]

(6) Conveyors as follows:

(A) Covered conveyor for coal or coke conveying of less than or equal to 360 tons per day; [326 IAC 6.8-10-3]

(B) Uncovered coal conveying of less than or equal to 120 tons per day. [326 IAC 6.8-10-3]

(7) Coal bunker and coal scale exhausts and associated dust collector vents. [326 IAC 6.8-10-3]

(8) Grinding and machining operations controlled with fabric filters, scrubbers, mist collectors, wet collectors and electrostatic precipitators with a design grain loading of less than or equal to 0.03 grains per actual cubic foot and a gas flow rate less than or equal to 4000 actual cubic feet per minute, including the following: deburring; buffing; polishing; abrasive blasting; pneumatic conveying; and woodworking operations. [326 IAC 6.8-1-2(a)]

(9) Vents from ash transport systems not operated at positive pressure. [326 IAC 6.8-1- 2(a)]

(10) Fuel dispensing activities, including the following:

(A) A gasoline fuel transfer dispensing operation handling less than or equal to one thousand three hundred (1,300) gallons q per day and filling storage tanks having a capacity equal to or less than ten thousand hundred (10,500) gallons. Such storage tanks may be in a fixed location or on mobile equipment. [326 IAC 8-9-1]

(B) A petroleum fuel other than gasoline dispensing facility, having a storage tank capacity less than or equal to ten thousand five hundred (10,500) gallons, and dispensing three thousand five hundred (3,500) gallons per day or less. A petroleum fuel, other than gasoline, dispensing facility having a storage capacity less than or equal to 10,500 gallons, dispensing less than or equal to 230,000 gallons per month. [326 IAC 8-9-1]

(b) Other Insignificant Activities

(1) Space heaters, process heaters, or boilers using the following fuels:

(A) Natural gas-fired combustion sources with heat input equal to or less than ten million (10,000,000) Btu per hour.

(B) Fuel oil-fired combustion sources with heat input equal to or less than two million (2,000,000)Btu per hour and firing fuel containing equal or less than five-tenths percent (0.5%) sulfur by weight.

(2) Equipment powered by diesel fuel fired or natural gas fired internal combustion engines of capacity equal to or less than five hundred thousand (500,000) British thermal units per hour except where total capacity of equipment operated by one (1) stationary source as defined by subdivision (38) exceeds two million (2,000,000) British thermal units per hour.

(3) Combustion source flame safety purging on startup.

(4) Refractory storage not requiring air pollution control equipment.

(5) Equipment used exclusively for the following:

(A) Packaging lubricants and greases.

(B) Filling drums, pails, or other packaging containers with the following: Lubricating oils, Waxes and Greases.

(6) Application of: oils; greases; lubricants; and nonvolatile material; as temporary protective coatings.

(7) Closed loop heating and cooling systems.

(8) Rolling oil recovery systems.

(9) Groundwater oil recovery wells.

(10) Activities associated with the treatment of wastewater streams with an oil and grease content less than or equal to 1% by volume.

(11) Water runoff ponds for petroleum coke-cutting and coke storage piles.

(12) Any operation using aqueous solutions containing less than 1% by weight of VOCs, excluding HAPS.

(13) Water based adhesives that are less than or equal to 5% by volume of VOCs excluding HAPs.

(14) Noncontact cooling tower systems with forced or induced draft cooling tower system not regulated under a NESHAP.

(15) Quenching operations used with heat treating operations.

(16) Replacement or repair of electrostatic precipitators, bags in baghouses and filters in other air filtration equipment.

(17) Heat exchanger cleaning and repair.

(18) Process vessel degassing and cleaning to prepare for internal repairs.

(19) Stockpiled soils from soil remediation activities that are covered and waiting transport for disposal.

(20) Paved and unpaved roads and parking lots with public access.

(21) Underground conveyors.

(22) Asbestos abatement projects regulated by 326 IAC 14-10.

(23) Purging of gas lines and vessels that is related to routing maintenance and repair of buildings, structures, or vehicles at the source where air emissions from those activities would not be associated with any production process.

(24) Flue gas conditioning systems and associated chemicals, such as the following: sodium sulfate, ammonia and sulfur trioxide.

(25) Equipment used to collect any material that might be released during a malfunction, process upset, or spill cleanup, including catch tanks, temporary liquid separators, tanks, and fluid handling equipment.

(26) Blow down for any of the following: sight glass; boiler; compressors; pumps; and cooling tower.

(27) Activities associated with emergencies, including the following:

(A) On-site fire training approved by the department.

(B) Emergency generators as follows: Gasoline generators not exceeding one hundred ten (110) horsepower , Diesel generators not exceeding one thousand six hundred (1,600) horsepower and natural gas turbines or reciprocating engines not exceeding one thousand six hundred (1,600) horsepower.

(C) Stationary fire pump.

(28) Purge double block and bleed valves.

(29) A laboratory as defined in 326 IAC 2-7-1(21)(G).

(The information describing the process contained in this facility description box is descriptive information and does not constitute enforceable conditions.)

Emission Limitations and Standards

D.17.1 Fugitive Dust Emission Limitations [326 IAC 6-4-2][326 IAC 6.8-10-3]

(a) Pursuant to 326 IAC 6-4-2:

(1) The brazing equipment, cutting torches, soldering equipment, welding equipment, structural steel and bridge fabrication, covered conveyors, dust collector vents associated with coal bunkers and coal scale, grinding and machining operations and ash transport systems vents generating fugitive dust shall be in violation of this rule (326 IAC 6-4) if any of the following criteria are violated:

(A) A source or combination of sources which cause to exist fugitive dust concentrations greater than sixty-seven percent (67%) in excess of ambient upwind concentrations as determined by the following formula:

$$P = \frac{100\ (R) - U)}{U}$$

Where
P = Percentage increase
R = Number of particles of fugitive dust measured at downward receptor site
U = Number of particles of fugitive dust measured at upwind or background site

(B) The fugitive dust is comprised of fifty percent (50%) or more respirable dust, then the percent increase of dust concentration in subdivision (1) of this section shall be modified as follows:

$$PR = (1.5 \pm N)\ P$$

Where
N = Fraction of fugitive dust that is respirable dust;
PR = allowable percentage increase in dust concentration above background; and
P = no value greater than sixty-seven percent (67%).

(C) The ground level ambient air concentrations exceed fifty (50) micrograms per cubic meter above background concentrations for a sixty (60) minute period.

(D) If fugitive dust is visible crossing the boundary or property line of a source. This subdivision may be refuted by factual data expressed in subdivisions (1), (2) or (3) of this section. 326 IAC 6-4-2(4) is not federally enforceable.

(2) Pursuant to 326 IAC 6-4-6(6) (Exceptions), fugitive dust from a source caused by adverse meteorological conditions will be considered an exception to this rule (326 IAC 6-4) and therefore not in violation.

(b) Pursuant to 326 IAC 6.8-10-3 Lake County Fugitive Particulate Matter Emissions Limitations, fugitive emissions from the brazing equipment, cutting torches, soldering equipment, welding equipment, structural steel and bridge fabrication, covered conveyors, dust collector vents associated with coal bunkers and coal scale, grinding and machining operations and ash transport systems vents generating fugitive dust shall comply with the emissions limitations in Section C.5 - Fugitive Dust Emissions.

D.17.2 Volatile Organic Compounds (VOC) [326 IAC 8-3-2]

(a) Pursuant to 326 IAC 8-3-2(a) (Cold cleaner degreaser control equipment and operating requirements), for cold cleaning operations constructed on or before January 1, 1980, located in Lake County at sources that have the potential emissions of one hundred (100) tons per year or greater of VOC, the Permittee shall:

(1) Equip the degreaser with a cover.
(2) Equip the degreaser with a device for draining cleaned parts.
(3) Close the degreaser cover whenever parts are not being handled in the degreaser.
(4) Drain cleaned parts for at least fifteen (15) seconds or until dripping ceases.
(5) Provide a permanent, conspicuous label that lists the operating requirements in subdivisions (3), (4), (6), and (7).
(6) Store waste solvent only in closed containers.
(7) Prohibit the disposal or transfer of waste solvent in such a manner that could allow greater than twenty percent (20%) of the waste solvent (by weight) to evaporate into the atmosphere.

D.17.3 Volatile Organic Compounds (VOC) [326 IAC 8-3-3

(a) Pursuant to 326 IAC 8-3-3(a) (Open top vapor degreaser), for open top vapor degreaser, the owner or operator shall ensure that the following control equipment and operating requirements are met:

(1) Equip the vapor degreaser with a cover that can be opened and closed easily without disturbing the vapor zone.
(2) Keep the cover closed at all times except when processing workloads through the degreaser.
(3) Minimize solvent carryout by:

(A) racking parts to allow complete drainage;
(B) moving parts in and out of the degreaser at less than three and three-tenths (3.3) meters per minute (eleven (11) feet per minute);
(C) degreasing the workload in the vapor zone at least thirty (30) seconds or until condensation ceases;
(D) tipping out any pools of solvent on the cleaned parts before removal; and
(E) allowing parts to dry within the degreaser for at least fifteen (15) seconds or until visually dry.

(4) Prohibit the entrance into the degreaser of porous or absorbent materials, such as cloth, leather, wood, or rope.
(5) Prohibit occupation of more than one-half (1/2) of the degreaser's open top area with the workload.
(6) Prohibit the loading of the degreaser in a manner that causes the vapor level to drop more than fifty percent (50%) of the vapor depth when the workload is removed.
(7) Prohibit solvent spraying above the vapor level.
(8) Repair solvent leaks immediately, or shut down the degreaser if leaks cannot be repaired immediately.
(9) Store waste solvent only in closed containers.

(10) Prohibit the disposal or transfer of waste solvent in a manner that could allow greater than twenty percent (20%) of the waste solvent (by weight) to evaporate into the atmosphere.
(11) Prohibit the use of workplace fans near the degreaser opening.
(12) Prohibit visually detectable water in the solvent exiting the water separator.
(13) Provide the degreaser with a permanent, conspicuous label that lists the operating requirements in subdivisions (2) through (12).

D.17.4 Volatile Organic Compounds (VOC) [326 IAC 8-3-4]

(a) Pursuant to 326 IAC 8-3-4(a) (Conveyorized degreaser control equipment and operating requirements), for conveyorized degreaser, the owner or operator shall ensure that the following control equipment and operating requirements are met:

(1) Minimize carryout emissions by:

(A) racking parts for optimal drainage; and
(B) maintaining the vertical conveyor speed at less than three and three-tenths (3.3) meters per minute (eleven (11) feet per minute).

(2) Store waste solvent only in closed containers.
(3) Prohibit the disposal or transfer of waste solvent in a manner that could allow greater than twenty percent (20%) of the waste solvent (by weight) to evaporate into the atmosphere.
(4) Repair solvent leaks immediately, or shut down the degreaser if leaks cannot be repaired immediately.
(5) Prohibit the use of workplace fans near the degreaser opening.
(6) Prohibit visually detectable water in the solvent from exiting the water separator.
(7) Equip the degreaser with a permanent, conspicuous label that lists the operating requirements in subdivisions (1) through (6).

D.17.5 Volatile Organic Liquid Storage Vessels [326 IAC 8-9-1]

(a) Pursuant to 326 IAC 8-9-1 (a) and (b) (Volatile Organic Liquid Storage Vessels), on and after October 1, 1995, stationary vessels used to store volatile organic liquids (VOL), that are located in Lake County with a capacity of less than thirty nine thousand (39,000) gallons are subject to the reporting and record keeping requirements of this rule. The VOL storage vessels are exempted from all other provisions of this rule.

(b) Pursuant to 326 IAC 8-9-6 (a) and (b), the Permittee of each Volatile Organic Liquid Storage vessel to which 326 IAC 8-9-1 applies shall maintain the following records for the life of the vessel and submit a report to IDEM, OAQ containing the following for each vessel:

(1) The vessel identification number,

(2) The vessel dimensions, and

(3) The vessel capacity.

Section D.18 **FACILITY OPERATION CONDITIONS**

Emission Unit Description: CASP FERs and PFRs
Note: Complete Descriptions are shown in Section A.2.

CASP A

(f) One (1) Feed Enhancement Reactor (FER) rotary kiln No. 1, identified as FERA1, and one (1) integral afterburner, identified as FERAB A1, exhausting through a heat exchanger to one (1) spray scrubber (OR-A-09-SR1015), one (1) cyclone (OR-A-09-CY-1025), and one (1) baghouse (OR-A-09-DC1030), in series, exhausting to stack OR-A-09-ST1045.

(g) One (1) Feed Enhancement Reactor (FER) rotary kiln, identified as FERA2, and one (1) integral afterburner, identified as FERAB A2, exhausting through a heat exchanger to one (1) spray scrubber (OR-A-09-SR2015), one (1) cyclone (OR-A-09-CY-2025), and one (1) baghouse (OR-A-09-DC2030), in series, exhausting to stack OR-A-09-ST2045.

(h) One (1) Feed Enhancement Reactor (FER) rotary kiln, identified as FERA3, and one (1) integral afterburner, identified as FERAB A3, exhausting through a heat exchanger to one (1) spray scrubber (OR-A-09-SR3015), one (1) cyclone (OR-A-09-CY-3025), and one (1) baghouse (OR-A-09-DC3030), in series, exhausting to stack OR-A-09-ST3045.

(i) One (1) Feed Enhancement Reactor (FER) rotary kiln, identified as FERA4, and one (1) integral afterburner, identified as FERAB A4, exhausting through a heat exchanger to one (1) spray scrubber (OR-A-09-SR4015), one (1) cyclone (OR-A-09-CY-4025), and one (1) baghouse (OR-A-09-DC4030), in series, exhausting to stack OR-A-09-ST4045.

(j) Four (4) coal tar reclaimer systems, identified as RCLM A1 - RCLM A4, approved for construction in 2010, each with a maximum capacity of 2,000 pounds of coal tar recovered per hour, one system dedicated to each of FERA1 - FERA4, consisting of the following:

(1) Four (4) reformers, one (1) per FER, operating at a temperature range of 500 ^{0}F - 800 ^{0}F, for the recovery and distillation of coal tar, with non-recovered vapors exhausting to FERAB A1 - FERAB A4, respectively.
(2) Four (4) coal tar surge tanks, one (1) per FER.

(m) One (1) Particle Fusion Reactor (PFR) tunnel kiln, identified as PFRA1, and one (1) afterburner, identified as PFRAB A1, exhausting through a clean energy recovery process (CERP) to one (1) spray scrubber (OR-A-10-SR1010), two (2) cyclones in parallel (collectively identified as OR-A-10-CY-1115), and one (1) baghouse (OR-A-10-DC1020), in series, exhausting to stack OR-A-10-ST1025.

(n) One (1) Particle Fusion Reactor (PFR) tunnel kiln, identified as PFRA2, and one (1) afterburner, identified as PFRAB A2, exhausting through an clean energy recovery process (CERP) to one (1) spray scrubber (OR-A-10-SR2010), two (2) cyclones in parallel (collectively identified as OR-A-10-CY-2115), and one (1) baghouse (OR-A-10-DC2020), in series, exhausting to stack OR-A-10-ST2025.

CASP B

(f) One (1) Feed Enhancement Reactor (FER) rotary kiln, identified as FERB1, and one (1) integral afterburner, identified as FERAB B1, exhausting through a heat exchanger to one (1) spray scrubber (OR-B-09-SR1015), one (1) cyclone (ORB-09-CY-1025), and one (1) baghouse (OR-B-09-DC1030), in series, exhausting to stack OR-B-09-ST1045.

(g) One (1) Feed Enhancement Reactor (FER) rotary kiln, identified as FERB2, and one (1) integral afterburner, identified as FERAB B2, exhausting through a heat exchanger to one (1) spray scrubber (OR-B-09-SR2015), one (1) cyclone (OR-B09-CY-2025), and one (1) baghouse (OR-B-09-DC2030), in series, exhausting to stack OR-B-09-ST2045.

(h) One (1) Feed Enhancement Reactor (FER) rotary kiln, identified as FERB3, and one (1) integral afterburner, identified as FERAB B3, exhausting through a heat exchanger to one (1) spray scrubber (OR-B-09-SR3015), one (1) cyclone (OR-B-09-CY-3025), and one (1) baghouse (OR-B-09-DC3030), in series, exhausting to stack OR-B-09-ST3045.

(i) One (1) Feed Enhancement Reactor (FER) rotary kiln, identified as FERB4, and one (1) integral afterburner, identified as FERAB B4, exhausting through a heat exchanger to one (1) spray scrubber (OR-B-09-SR4015), one (1) cyclone (OR-B-09-CY-4025), and one (1) baghouse (OR-B-09-DC4030), in series, exhausting to stack OR-B-09-ST4045.

(j) Four (4) coal tar reclaimer systems, identified as RCLM B1 - RCLM B4, approved for construction in 2010, each with a maximum capacity of 2,000 pounds of coal tar recovered per hour, one system dedicated to each of FERB1 - FERB4, consisting of the following:

(1) Four (4) reformers, one (1) per FER, operating at a temperature range of 500 ^{0}F - 800 ^{0}F, for the recovery and distillation of coal tar, with non-recovered vapors exhausting to FERAB B1 - FERAB B4, respectively.
(2) Four (4) coal tar surge tanks, one (1) per FER.

(m) One (1) Particle Fusion Reactor (PFR) tunnel kiln, identified as PFRB1, and one (1) afterburner, identified as PFRAB B1, exhausting through a clean energy recovery process (CERP) to one (1) spray scrubber (OR-B-10-SR1010), two (2) cyclones in parallel (collectively identified as OR-B-10-CY-1115), and one (1) baghouse (OR-B-10-DC1020), in series, exhausting to stack OR-B-10-ST1025.

(n) One (1) Particle Fusion Reactor (PFR) tunnel kiln, identified as PFRB2, and one (1) afterburner, identified as PFRAB B2, exhausting through a clean energy recovery process (CERP) to one (1) spray scrubber (OR-B10-SR2010), two (2) cyclones in parallel (collectively identified as OR-B-10-CY-2115), and one (1) baghouse (OR-B-10-DC2020), in series, exhausting to stack OR-B-10-ST2025.

CASP C

(f) One (1) Feed Enhancement Reactor (FER) rotary kiln, identified as FERC1, and one (1) integral afterburner, identified as FERAB C1, exhausting through a heat exchanger to one (1) spray scrubber (OR-C-09-SR1015), one (1) cyclone (OR-C-09-CY-1025), and one (1) baghouse (OR-C-09-DC1030), in series, exhausting to stack OR-C-09-ST1045.

(g) One (1) Feed Enhancement Reactor (FER) rotary kiln, identified as FERC2, and one (1) integral afterburner, identified as FERAB C2, exhausting through a heat exchanger to one (1) spray scrubber (OR-C-09-SR2015), one (1) cyclone (OR-C-09-CY-2025), and one (1) baghouse (OR-C-09-DC2030), in series, exhausting to stack OR-C-09-ST2045.

(h) One (1) Feed Enhancement Reactor (FER) rotary kiln, identified as FERC3, and one (1) integral afterburner, identified as FERAB C3, exhausting through a heat exchanger to one (1) spray scrubber (OR-C-09-SR3015), one (1) cyclone (OR-C -09-CY-3025), and one (1) baghouse (OR-C-09-DC3030), in series, exhausting to stack OR-C-09-ST3045.

(i) One (1) Feed Enhancement Reactor (FER) rotary kiln, identified as FERC4, and one (1) integral afterburner, identified as FERAB C4, exhausting through a heat exchanger to one (1) spray scrubber (OR-C-09-SR4015), one (1) cyclone (OR-C-09-CY-4025), and one (1) baghouse (OR-C-09-DC4030), in series, exhausting to stack OR-C-09-ST4045.

(j) Four (4) coal tar reclaimer systems, identified as RCLM C1 - RCLM C4, approved for construction in 2010, each with a maximum capacity of 2,000 pounds of coal tar recovered per hour, one system dedicated to each of FERC1 - FERC4, consisting of the following:

(1) Four (4) reformers, one (1) per FER, operating at a temperature range of 500 ^{0}F - 800 ^{0}F, for the recovery and distillation of coal tar, with non-recovered vapors exhausting to FERAB C1 - FERAB C4, respectively.
(2) Four (4) coal tar surge tanks, one (1) per FER.

(m) One (1) Particle Fusion Reactor (PFR) tunnel kiln, identified as PFRC1, and one (1) afterburner, identified as PFRAB C1, exhausting through a clean energy recovery process (CERP) to one (1) spray scrubber (OR-C-10-SR1010), two (2) cyclones in parallel (collectively identified as OR-C-10-CY-1115), and one (1) baghouse (OR-C-10-DC1020), in series, exhausting to stack OR-C-10-ST1025.

(n) One (1) Particle Fusion Reactor (PFR) tunnel kiln, identified as PFRC2, and one (1) afterburner, identified as PFRAB C2, exhausting through a clean energy recovery process (CERP) to one (1) spray scrubber (OR-C-10-SR2010), two (2) cyclones in parallel (collectively identified as OR-C-10-CY-2115), and one (1) baghouse (OR-C-10-DC2020), in series, exhausting to stack OR-C-10-ST2025.

CASP D

(f) One (1) Feed Enhancement Reactor (FER) rotary kiln, identified as FERD1, and one (1) integral afterburner, exhausting through a heat exchanger to one (1) spray scrubber (OR-D-09-SR1015), one (1) cyclone (OR-D-09-CY-1025), and one (1) baghouse (OR-D-09-DC1030), in series, exhausting to stack OR-D-09-ST1045.

(g) One (1) Feed Enhancement Reactor (FER) rotary kiln, identified as FERD2, and one (1) integral afterburner, identified as FERAB D2, exhausting through a heat exchanger to one (1) spray scrubber (OR-D-09-SR2015), one (1) cyclone (OR-D -09-CY-2025), and one (1) baghouse (OR-D-09-DC2030), in series, exhausting to stack OR-D-09-ST2045.

(h) One (1) Feed Enhancement Reactor (FER) rotary kiln, identified as FERD3, and one (1) integral afterburner, identified as FERAB D3, exhausting through a heat exchanger to one (1) spray scrubber (OR-D-09-SR3015), one (1) cyclone (OR-D-09-CY-3025), and one (1) baghouse (OR-D-09-DC3030), in series, exhausting to stack OR-D-09-ST3045.

(i) One (1) Feed Enhancement Reactor (FER) rotary kiln, identified as FERD4, and one (1) integral afterburner, identified as FERAB D4, exhausting through a heat exchanger to one (1) spray scrubber (OR-D-09-SR4015), one (1) cyclone (OR-D-09-CY-4025), and one (1) baghouse (OR-D-09-DC4030), in series, exhausting to stack OR-D-09-ST4045.

(j) Four (4) coal tar reclaimer systems, identified as RCLM D1 - RCLM D4, approved for construction in 2010, each with a maximum capacity of 2,000 pounds of coal tar recovered per hour, one system dedicated to each of FERD1 - FERD4, consisting of the following:

(1) Four (4) reformers, one (1) per FER, operating at a temperature range of 500 ^{0}F - 800 ^{0}F, for the recovery and distillation of coal tar, with non-recovered vapors exhausting to FERAB D1 - FERAB D4, respectively.
(2) Four (4) coal tar surge tanks, one (1) per FER.

(m) One (1) Particle Fusion Reactor (PFR) tunnel kiln, identified as PFRD1, and one (1) afterburner, identified as PFRAB D1, exhausting through a clean energy recovery process (CERP) to one (1) spray scrubber (OR-D-10-SR1010), two (2) cyclones in parallel (collectively identified as OR-D-10-CY-1115), and one (1) baghouse (OR-D-10-DC1020), in series, exhausting to stack OR-D-10-ST1025.

(n) One (1) Particle Fusion Reactor (PFR) tunnel kiln, identified as PFRD2, and one (1) afterburner, identified as PFRAB D2, exhausting through a clean energy recovery process (CERP) to one (1) spray scrubber (OR-D-10-SR2010), two (2) cyclones in parallel (collectively identified as OR-D-10-CY-2115), and one (1) baghouse (OR-D-10-DC2020), in series, exhausting to stack OR-D-10-ST2025.

(j) Four (4) coal tar reclaimer systems, identified as RCLM A1 - RCLM A4, approved for construction in 2010, each with a maximum capacity of 2,000 pounds of coal tar recovered per hour, one system dedicated to each of FER A1 - FER A4, consisting of the following:

(1) Four (4) reformers, one (1) per FER, operating at a temperature range of 500 ^{0}F - 800 ^{0}F, for the recovery and distillation of coal tar, with non-recovered vapors exhausting to FERAB A1 - FERAB A4, respectively.
(2) Four (4) coal tar surge tanks, one (1) per FER.

(The information describing the process contained in this facility description box is descriptive information and does not constitute enforceable conditions.)

Emission Limitations and Standards

D.18.1 Prevention of Significant Deterioration (PSD) Minor Limit PM/PM10/NOx/SO2/CO/VOC [326 IAC 2-2]
Nonattainment New Source Review (NSR) Minor Limit PM2.5/SO2 [326 IAC 2-1.1-5]

Pursuant to 326 IAC 2-2 (PSD), 326 IAC 2-3 (Emission Offset), and 326 IAC 2-1.1-5 (Nonattainment New Source Review), and in order to render the requirements of 326 IAC 2-2 (PSD), 326 IAC 2-3 (Emission Offset), and 326 IAC 2-1.1-5 (Nonattainment NSR) not applicable to the Carbon Alloy Synthesis Plant (CASP) modifications (Significant Source Modification (SSM) No. 089-28848-00121 and Significant Permit Modification (SPM) No. 089-29236-00121), the Permittee shall comply with the following:

(a) PM, PM_{10}, $PM_{2.5}$, NOx, SO2, CO, and VOC emissions from the following units shall not exceed the emission limits listed in the table below:

Unit ID	Emission Limits (lbs/hr)				
	PM/ PM10/ PM2.5 (each)	NOx	SO2	CO	VOC
CASP A - Feed Enhancement Reactors (FER)					
FERA1	0.40	0.80	0.10	1.10E-07	0.25
FERA2	0.40	0.80	0.10	1.10E-07	0.25
FERA3	0.40	0.80	0.10	1.10E-07	0.25
FERA4	0.40	0.80	0.10	1.10E-07	0.25
CASP A - Particle Fusion Reactors (PFR)					
PFRA1	3.10	3.20	7.60	9.20E-06	0.25
PFRA2	3.10	3.20	7.60	9.20E-06	0.25

Unit ID	Emission Limits (lbs/hr)				
	PM/ PM10/ PM2.5 (each)	NOx	SO2	CO	VOC
CASP B - Feed Enhancement Reactors (FER)					
FERB1	0.40	0.80	0.10	1.10E-07	0.25
FERB2	0.40	0.80	0.10	1.10E-07	0.25
FERB3	0.40	0.80	0.10	1.10E-07	0.25
FERB4	0.40	0.80	0.10	1.10E-07	0.25
CASP B - Particle Fusion Reactors (PFR)					
PFRB1	3.10	3.20	7.60	9.20E-06	0.25
PFRB2	3.10	3.20	7.60	9.20E-06	0.25
CASP C - Feed Enhancement Reactors (FER)					
FERC1	0.40	0.80	0.10	1.10E-07	0.25
FERC2	0.40	0.80	0.10	1.10E-07	0.25
FERC3	0.40	0.80	0.10	1.10E-07	0.25
FERC4	0.40	0.80	0.10	1.10E-07	0.25
CASP C - Particle Fusion Reactors (PFR)					
PFRC1	3.10	3.20	7.60	9.20E-06	0.25
PFRC2	3.10	3.20	7.60	9.20E-06	0.25
CASP D - Feed Enhancement Reactors (FER)					
FERD1	0.40	0.80	0.10	1.10E-07	0.25
FERD2	0.40	0.80	0.10	1.10E-07	0.25
FERD3	0.40	0.80	0.10	1.10E-07	0.25
FERD4	0.40	0.80	0.10	1.10E-07	0.25
CASP D - Particle Fusion Reactors (PFR)					
PFRD1	3.10	3.20	7.60	9.20E-06	0.25
PFRD2	3.10	3.20	7.60	9.20E-06	0.25

(b) The control devices for each of the above Feed Enhancement Reactors (FER) shall achieve one hundred percent (100%) capture of the emissions generated from the associated FER process.

(c) The control devices for each of the above Particle Fusion Reactors (PFR) shall achieve one hundred percent (100%) capture of the emissions generated from the associated PFR process.

Compliance with these limits, in conjunction with other limits taken as part of the CASP modification (SSM 089-22848-00121 and SPM 089-29236-00121), will ensure the following:

(d) The PM, PM10, NOx, SO2, VOC, and CO net emissions increase from the CASP modifications (SSM 089-22848-00121 and SPM 089-29236-00121) shall be less than twenty-five (25), fifteen (15), forty (40), forty (40), forty (40) and one hundred (100) tons, respectively, per twelve (12) consecutive month period, with compliance determined at the end of each month. Therefore, the requirements of 326 IAC 2-2 (PSD) are rendered not applicable to these modifications.

(e) The PM2.5 and SO2 net emissions increase from the CASP modifications (SSM 089-22848-00121 and SPM 089-29236-00121) shall be less than ten (10) and forty (40) tons,

respectively, per twelve (12) consecutive month period, with compliance determined at the end of each month. Therefore, the requirements of 326 IAC 2-1.1-5 (Nonattainment NSR) are rendered not applicable to these modifications.

D.18.1.1 Prevention of Significant Deterioration (PSD) Minor Limit PM/PM10 [326 IAC 2-2]
Nonattainment New Source Review (NSR) Minor Limit PM2.5/SO2 [326 IAC 2-1.1-5]

On June 27, 2008, the U.S. EPA issued Notices of Violation (NOV) to the Permittee for alleged violations regarding excess emissions from the coke oven batteries. Therefore the Permit Shield in Section B - Permit Shield does not shield the Permittee from possible enforcement actions initiated by U.S. EPA, IDEM or citizens. Compliance with the terms of this permit does not serve as proof of compliance for the emission units or the matters addressed in the NOVs. Following resolution of this enforcement action, IDEM will reopen this permit, if necessary, to incorporate a compliance schedule or any new applicable requirements. The standard language of Section B - Permit Shield does not shield any activity on which the permit is silent.

D.18.2 Particulate Emission Limitation [326 IAC 6.8-1-2(a)]

Pursuant to 326 IAC 6.8-1-2(a), the Permittee shall not allow or permit discharge to the atmosphere any gases which contain particulate matter in excess of 0.03 grain per dry standard cubic foot (dscf) from each of the facilities listed in this section.

Compliance Determination Requirements

D.18.3 Particulate Control

(a) In order for all units to comply with Conditions D.18.1 and D.18.2, each baghouse and cyclone listed in this section shall be in operation and controlling particulate at all times when its associated facility/emissions unit is in operation.

(b) In the event that bag failure is observed in a multi-compartment baghouse, if operations will continue for ten (10) days or more after the failure is observed before the failed units will be repaired or replaced, the Permittee shall promptly notify the IDEM, OAQ of the expected date the failed units will be repaired or replaced. The notification shall also include the status of the applicable compliance monitoring parameters with respect to normal, and the results of any response actions taken up to the time of notification.

D.18.4 Spray Scrubber Operation

In order for all units to comply with Condition D.18.1, each spray scrubber listed in this section shall be in operation at all times when its associated facility/emissions unit is in operation.

In order to comply with Condition D.18.1, each spray scrubber associated with a FER shall be in operation and capturing emissions from its associated FER at all time the associated FER is in operation.

D.18.5 Feed Enhancement Reactor (FER) Afterburner and Particle Fusion Reactor (PFR) Afterburner Operation

In order to comply with Condition D.18.1, the Feed Enhancement Reactor afterburners FERAB A1, FERAB A2, FERAB B1, FERAB B2, FERAB C1, FERAB C2, FERAB D1, and FERAB D2 shall be in operation and combusting the process emissions at all times when the associated Feed Enhancement Reactor is in operation.

In order to comply with Condition D.18.1, the Particle Fusion Reactor afterburners PFRAB A1, PFRAB A2, PFRAB B1, PFRAB B2, PFRAB C1, PFRAB C2, PFRAB D1, and PFRAB D2 shall be in operation and control VOC emissions at all times when the associated Particle Fusion Reactor is in operation.

In order to comply with Condition D.18.1, all PFR fans exhausting to the afterburners shall be in operation and capturing emissions from its associated PFR at all time the associated PFR is in operation.

D.18.6 Testing Requirements [326 IAC 2-7-6(1),(6)][326 IAC 2-1.1-11]

(a) Not later than 180 days after the startup of CASP A, the Permittee shall perform PM, PM10, PM2.5, NOx, SO2, CO, and VOC testing of one (1) of the four (4) Feed Enhancement Reactors (FERA1, FERA2, FERA3, FERA4) and one (1) of the two (2) Particle Fusion Reactor (PFRA1, PFRA2), utilizing methods approved by the commissioner. This test shall be repeated at least once every 2.5 years from the date of the most recent compliance demonstration.

(1) Until such time that all Feed Enhancement Reactors (FERA1, FERA2, FERA3, FERA4) have been tested once, subsequent testing shall be conducted for a FER that has not yet demonstrated compliance. After such time that all Feed Enhancement Reactors (FERA1, FERA2, FERA3, FERA4) have been tested, testing shall be conducted for the FER with the longest lapse in time since the most recent compliance demonstration.

(2) Subsequent testing of the Particle Fusion Reactors (PFRA1, PFRA2) shall be conducted for the Particle Fusion Reactor not tested in the most recent compliance demonstration.

(b) Not later than 180 days after the startup of CASP B, the Permittee shall perform PM, PM10, PM2.5, NOx, SO2, CO, and VOC testing of one (1) of the four (4) Feed Enhancement Reactors (FERB1, FERB2, FERB3, FERB4) and one (1) of the two (2) Particle Fusion Reactor (PFRB1, PFRB2), utilizing methods approved by the commissioner. This test shall be repeated at least once every 2.5 years from the date of the most recent valid compliance demonstration.

(1) Until such time that all Feed Enhancement Reactors (FERB1, FERB2, FERB3, FERB4) have been tested once, subsequent testing shall be conducted for a FER that has not yet demonstrated compliance. After such time that all Feed Enhancement Reactors (FERB1, FERB2, FERB3, FERB4) have been tested, testing shall be conducted for the FER with the longest lapse in time since the most recent compliance demonstration.

(2) Subsequent testing of the Particle Fusion Reactors (PFRB1, PFRB2) shall be conducted for the Particle Fusion Reactor not tested in the most recent compliance demonstration.

(c) Not later than 180 days after the startup of CASP C, the Permittee shall perform PM, PM10, PM2.5, NOx, SO2, CO, and VOC testing of one (1) of the four (4) Feed Enhancement Reactors (FERC1, FERC2, FERC3, FERC4) and one (1) of the two (2) Particle Fusion Reactor (PFRC1, PFRC2), utilizing methods approved by the commissioner. This test shall be repeated at least once every 2.5 years from the date of the most recent valid compliance demonstration.

(1) Until such time that all Feed Enhancement Reactors (FERC1, FERC2, FERC3, FERC4) have been tested once, subsequent testing shall be conducted for a FER that has not yet demonstrated compliance. After such time that all Feed Enhancement Reactors (FERC1, FERC2, FERC3, FERC4) have been tested, testing shall be conducted for the FER with the longest lapse in time since the most recent compliance demonstration.

(2) Subsequent testing of the Particle Fusion Reactors (PFRC1, PFRC2) shall be conducted for the Particle Fusion Reactor not tested in the most recent compliance demonstration.

(d) Not later than 180 days after the startup of CASP D, the Permittee shall perform PM, PM10, PM2.5, NOx, SO2, CO, and VOC testing of one (1) of the four (4) Feed Enhancement Reactors (FERD1, FERD2, FERD3, FERD4) and one (1) of the two (2) Particle Fusion Reactor (PFRD1, PFRD2), utilizing methods approved by the commissioner. This test shall be repeated at least once every 2.5 years from the date of the most recent valid compliance demonstration.

(1) Until such time that all Feed Enhancement Reactors (FERD1, FERD2, FERD3, FERD4) have been tested once, subsequent testing shall be conducted for a FER that has not yet demonstrated compliance. After such time that all Feed Enhancement Reactors (FERD1, FERD2, FERD3, FERD4) have been tested, testing shall be conducted for the FER with the longest lapse in time since the most recent compliance demonstration.

(2) Subsequent testing of the Particle Fusion Reactors (PFRD1, PFRD2) shall be conducted for the Particle Fusion Reactor not tested in the most recent compliance demonstration.

Testing shall be conducted in accordance with the provisions of 326 IAC 3-6 (Source Sampling Procedures). Section C – Performance Testing contains the Permittee's obligation with regard to the performance testing required by this condition.

Compliance Monitoring Requirements [326 IAC 2-7-6(1)] [326 IAC 2-7-5(1)]

D.18.7 Feed Enhancement Reactor Afterburner and Particle Fusion Reactor Afterburner Temperature Monitoring

(a) A continuous monitoring system shall be calibrated, maintained, and operated on the Feed Enhancement Reactor afterburners (FERAB A1, FERAB A2, FERAB B1, FERAB B2, FERAB C1, FERAB C2, FERAB D1, and FERAB D2) and the Particle Fusion Reactor afterburners (PFRAB A1, PFRAB A2, PFRAB B1, PFRAB B2, PFRAB C1, PFRAB C2, PFRAB D1, and PFRAB D2) for measuring operating temperature. For the purpose of this condition, continuous means no less often than once per fifteen (15) minutes. The output of this system shall be recorded as a 3-hour average. From the date of startup until the stack test results are available, the Permittee shall operate each afterburner at or above the 3-hour average temperature of 1,850°F.

(b) The Permittee shall determine the 3-hour average temperature from the most recent valid stack test that demonstrates compliance with limits in Condition D.18.1.

(c) On and after the date the stack test results are available, the Permittee shall operate each afterburner at or above the 3-hour average temperature as observed during the compliant stack test.

D.18.8 Coal Tar Reclaimer Temperature Monitoring

A continuous monitoring system shall be calibrated, maintained, and operated on each of the coal tar reclaimer systems listed in this section for measuring outlet exhaust temperature of each reformer. For the purposes of this condition, continuous monitoring shall mean no less often than once per minute. The output of this system shall be recorded as a 15-min average. The Permittee shall operate each coal tar reformer at or above the 15-minute average temperature of 300 °F.

D.18.9 Scrubber Monitoring [40 CFR Part 64]

(a) The Permittee shall monitor the pH of the scrubbing liquid, exhaust air stream pressure drop, and pump discharge pressure of all spray scrubbers listed in this section at least once per day when the spray tower absorber is in operation.

(b) When for any one reading, the pH of the scrubbing liquid is below the minum, the Permittee shall take a reasonable response. The minum for this unit is 5.0 unless a different minumum is determined during the latest stack test. Section C - Response to Excursions or Exceedances contains the Permittee's obligation with regard to the reasonable response steps required by this condition. A pH reading that is less than the minimum is not a deviation from this permit. Failure to take response steps shall be considered a deviation from this permit.

(c) When for any one reading, the exhaust air stream pressure drop is outside the normal range, the Permittee shall take a reasonable response. The normal range for this unit is between 1.0 and 6.0 inches of water unless a different upper-bound or lower-bound value for this range is determined during the latest stack test. Section C - Response to Excursions or Exceedances contains the Permittee's obligation with regard to the reasonable response steps required by this condition. An exhaust air stream pressure drop that is outside the range is not a deviation from this permit. Failure to take response steps shall be considered a deviation from this permit.

(d) When for any one reading, the pump discharge pressure is outside the normal range, the Permittee shall take a reasonable response. The normal range for this unit is a range of 55 and 70 pounds per square inch of water (psi) unless a different upper-bound or lower-bound value for this range is established during the latest stack test. Section C - Response to Excursions or Exceedances contains the Permittee's obligation with regard to the reasonable response steps required by this condition. A pump discharge pressure that is outside a range of 55 and 70 psi, or a range established during the latest stack test, is not a deviation from this permit. Failure to take response steps shall be considered a deviation from this permit.

(e) The instruments used for determining the pressure shall comply with Section C - Instrument Specifications, of this permit, shall be subject to approval by IDEM, OAQ, and shall be calibrated or replaced at least once every six (6) months or other time period specified by the manufacturer. The Permittee shall maintain records of the manufacturer specifications, if used.

D.18.10 Visible Emissions Notations [40 CFR Part 64]

(a) Visible emission notations of all the baghouse stack exhausts listed in this section shall be performed once per day during normal daylight operations. A trained employee shall record whether emissions are normal or abnormal.

(b) For processes operated continuously, "normal" means those conditions prevailing, or expected to prevail, at least eighty percent (80%) of the time the process is in operation, not counting startup or shut down time.

(c) In the case of batch or discontinuous operations, readings shall be taken during that part of the operation that would normally be expected to cause the greatest emissions.

(d) A trained employee is an employee who has worked at the plant at least one (1) month and has been trained in the appearance and characteristics of normal visible emissions for that specific process.

(e) If abnormal missions are observed, the Permittee shall take a reasonable response. Section C- Response to Excursions or Exceedances contains the Permittee's obligation

with regard to the reasonable response steps required by this condition. An abnormal reading is not a deviation from this permit. Failure to take response steps shall be considered a deviation from this permit.

D.18.11 Parametric Monitoring Notations [40 CFR Part 64]

The Permittee shall record the pressure drop across each baghouse and cyclone listed in this section, at least once per day when the associated facility/emissions unit is in operation. When for any one reading, the pressure drop across a baghouse is outside the normal range, the Permittee shall take a reasonable response. The normal range for this unit is a pressure drop between 0.5 and 6.0 inches of water unless a different upper-bound or lower-bound value for this range is determined during the latest stack test. Section C - Response to Excursions or Exceedances contains the Permittee's obligation with regard to the reasonable response steps required by this condition. A pressure reading that is outside the above mentioned range is not a deviation from this permit. Failure to take response steps shall be considered a deviation from this permit.

The instruments used for determining the pressure shall comply with Section C - Instrument Specifications, of this permit, shall be subject to approval by IDEM, OAQ, and shall be calibrated or replaced at least once every six (6) months or other time period specified by the manufacturer. The Permittee shall maintain records of the manufacturer specifications, if used.

D.18.12 Broken or Failed Bag Detection [40 CFR Part 64]

(a) For a single compartment baghouse controlling emissions from a process operated continuously, a failed unit and the associated process shall be shut down immediately until the failed units have been repaired or replaced. Operations may continue only if the event qualifies as an emergency and the Permittee satisfies the requirements of the emergency provisions of this permit (Section B - Emergency Provisions).

(b) For a single compartment baghouse controlling emissions from a batch process, the feed to the process shall be shut down immediately until the failed unit has been repaired or replaced. The emissions unit shall be shut down no later that the completion of the processing of the material in the line or emissions unit. Operations may continue only if the event qualifies as an emergency and the Permittee satisfies the requirements of the emergency provisions of this permit (Section B - Emergency Provisions).

Bag failure can be indicated by a significant drop in the baghouse's pressure reading with abnormal visible emissions, by an opacity violation, or by other means such as gas temperature, flow rate, air infiltration, leaks, dust traces or triboflows.

D.18.13 Cyclone Failure Detection [40 CFR Part 64]

In the event that cyclone failure has been observed:

Failed units and the associated process will be shut down immediately until the failed units have been repaired or replaced. The emissions unit shall be shut down no later than the completion of the processing of the material in the line. Operations may continue only if the event qualifies as an emergency and the Permittee satisfies the requirements of the emergency provisions of this permit (Section B - Emergency Provisions).

Record Keeping and Reporting Requirement [326 IAC 2-7-5(3)] [326 IAC 2-7-19]

D.18.14 Record Keeping Requirements

(a) To document the compliance status with Condition D.18.7, the Permittee shall maintain the continuous temperature records (on a 3-hour average basis) for the Feed Enhancement Reactor afterburners and Particle Fusion Reactor afterburners and the 3-

hour average temperature used to demonstrate compliance during the most recent compliant stack test.

(b) To document the compliance status with Condition D.18.8, the Permittee shall maintain the continuous temperature records (on a 15-minute average basis) for the coal tar reformers.

(c) To document the compliance status with Condition D.18.9, the Permittee shall maintain daily records of the scrubber operating parameters required by that condition. The Permittee shall include in its daily record when a reading is not taken and the reason for the lack of a reading (e.g. the process did not operate that day).

(d) To document the compliance status with Condition D.18.10, the Permittee shall maintain daily records of the visible emission notations of the stack exhaust of each baghouse listed in this section. The Permittee shall include in its daily record when a visible emission notation is not taken and the reason for the lack of a visible emission notation, (i.e. the process did not operate that day).

(e) To document the compliance status with Condition D.18.11, the Permittee shall maintain daily records of the pressure drop across each baghouse and cyclone listed in this section. The Permittee shall include in its daily record when a pressure drop reading is not taken and the reason for the lack of a pressure drop reading, (i.e. the process did not operate that day).

(f) Section C - General Record Keeping Requirements contains the Permittee's obligation with regard to the records required by this condition.

Section D.19 **FACILITY OPERATION CONDITIONS**

Emission Unit Description: CASP Raw Material Receiving, Handling and Preparation Note: Complete Descriptions are shown in Section A.2.

CASP A

(a) Raw Material Receiving Handling and Silos A, identified as RMRHSA, consisting of the following:

(1) One (1) CDA1 wet coal feed hopper discharge, one (1) vibratory feeder, and associated drag conveyors, ducted to one (1) baghouse (OR-A-01-DC1105), exhausting to stack OR-A-01-ST1105.
(2) One (1) CDA2 wet coal feed hopper discharge, one (1) vibratory feeder, and associated drag conveyors, ducted to one (1) dust collector (OR-A-01-DC2105), exhausting to stack OR-A-01-ST2105.
(3) Five (5) dry coal storage silos, ducted to dedicated baghouses (OR-A-02-DC1070, OR-A-02-DC2070, OR-A-02-DC3070, OR-A-02-DC4070, and OR-A-02-DC5070, respectively), exhausting to stacks OR-A-02-ST1070, OR-A-02-ST2070, OR-A-02-ST3070, OR-A-02-ST4070, and OR-A-02-ST5070, respectively.
(4) Five (5) blend #1 weigh feeders and one (1) drag conveyor, ducted to one (1) baghouse (OR-A-03-DC1105), exhausting to stack OR-A-03-ST1105.
(5) Four (4) blend #1 feed hoppers and two (2) blend #1 hopper feed drag conveyors, ducted to one (1) baghouse (OR-A-04-DC1105), exhausting to stack OR-A-04-ST1105.

(b) One (1) coal dryer and associated dried coal conveyors, collectively identified as CDA1, ducted to three (3) cyclones in parallel (collectively identified as OR-A-01-CY-1305) and one (1) dust collector (OR-A-01-DC1205), in series, exhausting to the coal dryer for heat recovery, with excess heat exhausting to stack OR-A-01-ST1205.

(c) One (1) coal crusher and associated crushed coal conveyors, collectively identified as CCA1, ducted to one (1) dust collector (OR-A-02-DC1105), exhausting to stack OR-A-02-ST1105.

(d) One (1) coal dryer and associated dried coal conveyors, collectively identified as CDA2, ducted to three (3) cyclones in parallel (collectively identified as OR-A-01-CY-2305) and one (1) dust collector (OR-A-01-DC2205), in series, exhausting to the coal dryer for heat recovery, with excess heat exhausting to stack OR-A-01-ST2205.

(e) One (1) coal crusher and associated crushed coal conveyors, collectively identified as CCA2, ducted to one (1) dust collector (OR-A-02-DC2105), exhausting to stack OR-A-02-ST2105.

(k) One (1) Carborec Storage and Blending Area A, identified as CBSBA, consisting of the following:

(1) Carborec crusher feed drag conveyors, ducted to a baghouse (OR-A-05-DC1205), exhausting to stack OR-A-05-ST1205.
(2) Six (6) weigh feeders and blend #2 drag conveyors, ducted to a baghouse (OR-A-05-DC1405), exhausting to stack OR-A-05-ST1405.
(3) One (1) Carborec storage silo, ducted to a baghouse (OR-A-05-DC6070), exhausting to stack OR-A-05-ST6070.
(4) One (1) blend #2 surge bin, ducted to a baghouse (OR-A-06-DC1405), exhausting to stack OR-A-06-ST1405.
(5) Three (3) blend #2 weigh feeders, three (3) blend #2 drag conveyors, three (3) blend #2 crushers, three (3) hi-intensive mixers, three (3) pug mills, and three (3) densifers, billet belt conveyors, one (1) billet roller screener, and one (1) billet fines weigh feeder, ducted to a baghouse (OR-A-06-DC1205), exhausting to stack OR-A-06-ST1205.

(p) One (1) lime storage silo, identified as LSA, equipped with one (1) dust collector (OR-A-12-DC1006), exhausting to stack OR-A-12-ST1006.

CASP B

(a) Raw Material Receiving Handling and Silos B, identified as RMRHSB, approved for construction in 2010, consisting of the following:

(1) One (1) CDB1 wet coal feed hopper discharge, one (1) vibratory feeder, and associated drag conveyors, ducted to one (1) baghouse (OR-B-01-DC1105), exhausting to stack OR-B-01-ST1105.
(2) One (1) CDB2 wet coal feed hopper discharge, one (1) vibratory feeder, and associated drag conveyors, ducted to one (1) dust collector (OR-B-01-DC2105), exhausting to stack OR-B-01-ST2105.
(3) Five (5) dry coal storage silos, ducted to dedicated baghouses (OR-B-02-DC1070, OR-B-02-DC2070, OR-B-02-DC3070, OR-B-02-DC4070, and OR-B-02-DC5070, respectively), exhausting to stacks OR-B-02-ST1070, OR-B-02-ST2070, OR-B-02-ST3070, OR-B-02-ST4070, and OR-B-02-ST5070, respectively.
(4) Five (5) blend #1 weigh feeders and one (1) drag conveyor, ducted to one (1) baghouse (OR-B-03-DC1105), exhausting to stack OR-B-03-ST1105.
(5) Four (4) blend #1 feed hoppers and two (2) blend #1 hopper feed drag conveyors, ducted to one (1) baghouse (OR-B-04-DC1105), exhausting to stack OR-B-04-ST1105.

(b) One (1) coal dryer and associated dried coal conveyors, collectively identified as CDB1, ducted to three (3) cyclones in parallel (collectively identified as OR-B-01-CY-1305) and one (1) dust collector (OR-B-01-DC1205), in series, exhausting to the coal dryer for heat recovery, with excess heat exhausting to stack OR-B-01-ST1205.

(c) One (1) coal crusher and associated crushed coal conveyors, collectively identified as CCB1, ducted to one (1) dust collector (OR-B-02-DC1105), exhausting to stack OR-B-02-ST1105.

(d) One (1) coal dryer and associated dried coal conveyors, collectively identified as CDB2, ducted to three (3) cyclones in parallel (collectively identified as OR-B-01-CY-2305) and one (1) dust collector (OR-B-01-DC2205), in series, exhausting to the coal dryer for heat recovery, with excess heat exhausting to stack OR-B-01-ST2205.

(e) One (1) coal crusher and associated crushed coal conveyors, collectively identified as CCB2, ducted to one (1) dust collector (OR-B-02-DC2105), exhausting to stack OR-B-02-ST2105.

(k) One (1) Carborec Storage and Blending Area B, identified as CBSBB, approved for construction in 2010, consisting of the following:

(1) Carborec crusher feed drag conveyors, ducted to a baghouse (OR-B-05-DC1205), exhausting to stack OR-B-05-DC1205.
(2) Six (6) weigh feeders and blend #2 drag conveyors, ducted to a baghouse (OR-B-05-DC1405), exhausting to stack OR-B-05-DC1405.
(3) One (1) Carborec storage silo, ducted to a baghouse (OR-B-05-DC6070), exhausting to stack OR-B-05-ST6070.
(4) One (1) blend #2 surge bin, ducted to a baghouse (OR-B-06-DC1405), exhausting to stack OR-B-06-ST1405.
(5) Three (3) blend #2 weigh feeders, three (3) blend #2 drag conveyors, three (3) blend #2 crushers, three (3) hi-intensive mixers, three (3) pug mills, and three (3) densifers, billet belt conveyors, one (1) billet roller screener, and one (1) billet fines weigh feeder, ducted to a baghouse (OR-B-06-DC1205), exhausting to stack OR-B-06-ST1205.

(p) One (1) lime storage silo, identified as LSB, equipped with one (1) dust collector (OR-B-12-DC1006), exhausting to stack OR-B-12-ST1006.

CASP C

(a) Raw Material Receiving Handling and Silos C, identified as RMRHSC, approved for construction in 2010, consisting of the following:

(1) One (1) CDC1 wet coal feed hopper discharge, one (1) vibratory feeder, and associated drag conveyors, ducted to one (1) baghouse (OR-C-01-DC1105), exhausting to stack OR-C-01-ST1105.
(2) One (1) CDC2 wet coal feed hopper discharge, one (1) vibratory feeder, and associated drag conveyors, ducted to one (1) dust collector (OR-C-01-DC2105), exhausting to stack OR-C-01-ST2105.
(3) Five (5) dry coal storage silos, ducted to dedicated baghouses (OR-C-02-DC1070, OR-C-02-DC2070, OR-C-02-DC3070, OR-C-02-DC4070, and OR-C-02-DC5070, respectively), exhausting to stacks OR-C-02-ST1070, OR-C-02-ST2070, OR-C-02-ST3070, OR-C-02-ST4070, and OR-C-02-ST5070, respectively.
(4) Five (5) blend #1 weigh feeders and one (1) drag conveyor, ducted to one (1) baghouse (OR-C-03-DC1105), exhausting to stack OR-C-03-ST1105.
(5) Four (4) blend #1 feed hoppers and two (2) blend #1 hopper feed drag conveyors, ducted to one (1) baghouse (OR-C-04-DC1105), exhausting to stack OR-C-04-ST1105.

(b) One (1) coal dryer and associated dried coal conveyors, collectively identified as CDC1, ducted to three (3) cyclones in parallel (collectively identified as OR-C-01-CY-1305) and one (1) dust collector (OR-C-01-DC1205), in series, exhausting to the coal dryer for heat recovery, with excess heat exhausting to stack OR-C-01-ST1205.

(c) One (1) coal crusher and associated crushed coal conveyors, collectively identified as CCC1, ducted to one (1) dust collector (OR-C-02-DC1105), exhausting to stack OR-C-02-ST1105.

(d) One (1) coal dryer and associated dried coal conveyors, collectively identified as CDC2, ducted to three (3) cyclones in parallel (collectively identified as OR-C-01-CY-2305) and one (1) dust collector (OR-C-01-DC2205), in series, exhausting to the coal dryer for heat recovery, with excess heat exhausting to stack OR-C-01-ST2205.

(e) One (1) coal crusher and associated crushed coal conveyors, collectively identified as CCC2, ducted to one (1) dust collector (OR-C-02-DC2105), exhausting to stack OR-C-02-ST2105.

(k) One (1) Carborec Storage and Blending Area C, identified as CBSBC, approved for construction in 2010, consisting of the following:

(1) Carborec crusher feed drag conveyors, ducted to a baghouse (OR-C-05-DC1205), exhausting to stack OR-C-05-ST1205.
(2) Six (6) weigh feeders and blend #2 drag conveyors, ducted to a baghouse (OR-C-05-DC1405), exhausting to stack OR-C-05-ST1405.
(3) One (1) Carborec storage silo, ducted to a baghouse (OR-C-05-DC6070), exhausting to stack OR-C-05-ST6070.
(4) One (1) blend #2 surge bin, ducted to a baghouse (OR-C-06-DC1405), exhausting to stack OR-C-06-ST1405.
(5) Three (3) blend #2 weigh feeders, three (3) blend #2 drag conveyors, three (3) blend #2 crushers, three (3) hi-intensive mixers, three (3) pug mills, and three (3) densifers, billet belt conveyors, one (1) billet roller screener, and one (1) billet fines weigh feeder, ducted to a baghouse (OR-C-06-DC1205), exhausting to stack OR-C-06-ST1205.

(p) One (1) lime storage silo, identified as LSC, equipped with one (1) dust collector (OR-C-12-DC1006), exhausting to stack OR-C-12-ST1006.

CASP D

(a) Raw Material Receiving Handling and Silos D, identified as RMRHSD, approved for construction in 2010, consisting of the following:

(1) One (1) CDD1 wet coal feed hopper discharge, one (1) vibratory feeder, and associated drag conveyors, ducted to one (1) baghouse (OR-D-01-DC1105), exhausting to stack OR-D-01-ST1105.
(2) One (1) CDD2 wet coal feed hopper discharge, one (1) vibratory feeder, and associated drag conveyors, ducted to one (1) dust collector (OR-D-01-DC2105), exhausting to stack OR-D-01-ST2105.
(3) Five (5) dry coal storage silos, ducted to dedicated baghouses (OR-D-02-DC1070, OR-D-02-DC2070, OR-D-02-DC3070, OR-D-02-DC4070, and OR-D-02-DC5070, respectively), exhausting to stacks OR-D-02-ST1070, OR-D-02-ST2070, OR-D-02-ST3070, OR-D-02-ST4070, and OR-D-02-ST5070, respectively.
(4) Five (5) blend #1 weigh feeders and one (1) drag conveyor, ducted to one (1) baghouse (OR-D-03-DC1105), exhausting to stack OR-D-03-ST1105.
(5) Four (4) blend #1 feed hoppers and two (2) blend #1 hopper feed drag conveyors, ducted to one (1) baghouse (OR-D-04-DC1105), exhausting to stack OR-D-04-ST1105.

(b) One (1) coal dryer and associated dried coal conveyors, collectively identified as CDD1, ducted to three (3) cyclones in parallel (collectively identified as OR-D-01-CY-1305) and one (1) dust collector (OR-D-01-DC1205), in series, exhausting to the coal dryer for heat recovery, with excess heat exhausting to stack OR-D-01-ST1205.

(c) One (1) coal crusher and associated crushed coal conveyors, collectively identified as CCD1, ducted to one (1) dust collector (OR-D-02-DC1105), exhausting to stack OR-D-02-ST1105.

(d) One (1) coal dryer and associated dried coal conveyors, collectively identified as CDD2, ducted to three (3) cyclones in parallel (collectively identified as OR-D-01-CY-2305) and one (1) dust collector (OR-D-01-DC2205), in series, exhausting to the coal dryer for heat recovery, with excess heat exhausting to stack OR-D-01-ST2205.

(e) One (1) coal crusher and associated crushed coal conveyors, collectively identified as CCD2, ducted to one (1) dust collector (OR-D-02-DC2105), exhausting to stack OR-D-02-ST2105.

(k) One (1) Carborec Storage and Blending Area D, identified as CBSBD, approved for construction in 2010, consisting of the following:

(1) Carborec crusher feed drag conveyors, ducted to a baghouse (OR-D-05-DC1205), exhausting to stack OR-D-05-ST1205.
(2) Six (6) weigh feeders and blend #2 drag conveyors, ducted to a baghouse (OR-D-05-DC1405), exhausting to stack OR-D-05-ST1405.
(3) One (1) Carborec storage silo, ducted to a baghouse (OR-D-05-DC6070), exhausting to stack OR-D-05-ST6070.
(4) One (1) blend #2 surge bin, ducted to a baghouse (OR-D-06-DC1405), exhausting to stack OR-D-06-ST1405.
(5) Three (3) blend #2 weigh feeders, three (3) blend #2 drag conveyors, three (3) blend #2 crushers, three (3) hi-intensive mixers, three (3) pug mills, and three (3) densifers, billet belt conveyors, one (1) billet roller screener, and one (1) billet fines weigh feeder, ducted to a baghouse (OR-D-06-DC1205), exhausting to stack OR-DA-06-ST1205.

(p) One (1) lime storage silo, identified as LSD, equipped with one (1) dust collector (OR-D-12-DC1006), exhausting to stack OR-D-12-ST1006.

(The information describing the process contained in this facility description box is descriptive information and does not constitute enforceable conditions.)

Emission Limitations and Standards

D.19.1 Prevention of Significant Deterioration (PSD) Minor Limit PM/PM10 [326 IAC 2-2]
Nonattainment New Source Review (NSR) Minor Limit PM2.5 [326 IAC 2-1.1-5]

Pursuant to 326 IAC 2-2 (PSD) and 326 IAC 2-1.1-5 (Nonattainment New Source Review), and in order to render the requirements of 326 IAC 2-2 (PSD) and 326 IAC 2-1.1-5 (Nonattainment NSR) not applicable to the Carbon Alloy Synthesis Plant (CASP) modifications (Significant Source Modification (SSM) No. 089-28848-00121 and Significant Permit Modification (SPM) No. 089-29236-00121), the Permittee shall comply with the following:

(a) PM, PM_{10}, and $PM_{2.5}$ emissions from the following units shall not exceed the emission limits listed in the table below:

Facilities	Stack ID	PM/ PM10/ PM2.5 (lb/hr each)
coal dryer and associated dried coal conveyors (CDA1)	OR-A-01-ST1215	1.29
coal crusher and associated crushed coal conveyors (CCA1)	OR-A-02-ST1105	0.11
coal dryer and associated dried coal conveyors (CDA2)	OR-A-01-ST2215	1.29
coal crusher and associated crushed coal conveyors (CCA2)	OR-A-02-ST2105	0.11
lime storage silo (LSA)	OR-A-12-ST1006	0.04
coal dryer and associated dried coal conveyors (CDB1)	OR-B-01-ST1215	1.29
coal crusher and associated crushed coal conveyors (CCB1)	OR-B-02-ST1105	0.11
coal dryer and associated dried coal conveyors (CDB2)	OR-B-01-ST2215	1.29
coal crusher and associated crushed coal conveyors (CCB2)	OR-B-02-ST2105	0.11
lime storage silo (LSB)	OR-B-12-ST1006	0.04
coal dryer and associated dried coal conveyors (CDC1)	OR-C-01-ST1215	1.29
coal crusher and associated crushed coal conveyors (CCC1)	OR-C-02-ST1105	0.11
coal dryer and associated dried coal conveyors (CDC2)	OR-C-01-ST2215	1.29
coal crusher and associated crushed coal conveyors (CCC2)	OR-C-02-ST2105	0.11
lime storage silo (LSC)	OR-C-12-ST1006	0.04
coal dryer and associated dried coal conveyors (CDD1)	OR-D-01-ST1215	1.29
coal crusher and associated crushed coal conveyors (CCD1)	OR-D-02-ST1105	0.11
coal dryer and associated dried coal conveyors (CDD2)	OR-D-01-ST2215	1.29
coal crusher and associated crushed coal conveyors (CCD2)	OR-D-02-ST2105	0.11
lime storage silo (LSD)	OR-D-12-ST1006	0.04
CASP A - RMRHSA		
CDA1 wet coal feed hopper discharge, vibratory feeder, and associated drag conveyors	OR-A-01-ST1105	0.05
CDA2 wet coal feed hopper discharge, vibratory feeder, and associated drag conveyors	OR-A-01-ST2105	0.11
dry coal storage silo	OR-A-02-ST1070	0.03

Facilities	Stack ID	PM/ PM10/ PM2.5 (lb/hr each)
dry coal storage silo	OR-A-02-ST2070	0.03
dry coal storage silo	OR-A-02-ST3070	0.03
dry coal storage silo	OR-A-02-ST4070	0.03
dry coal storage silo	OR-A-02-ST5070	0.03
blend #1 weigh feeders and drag conveyor	OR-A-03-ST1105	0.11
blend #1 feed hoppers and blend #1 hopper feed drag conveyors	OR-A-04-ST1105	0.03
CASP A - CBSBA		
Carborec crusher feed drag conveyors	OR-A-05-ST1205	0.11
weigh feeders and blend #2 drag conveyors	OR-A-05-ST1405	0.41
Carborec storage silo	OR-A-05-ST6070	0.04
blend #2 surge bin	OR-A-06-ST1405	0.04
blend #2 weigh feeders, blend #2 drag conveyors, blend #2 crushers, hi-intensive mixers, pug mills, densifers, billet belt conveyors, billet roller screener, and billet fines weigh feeder	OR-A-06-ST1205	0.11
CASP B - RMRHSB		
CDB1 wet coal feed hopper discharge, vibratory feeder, and associated drag conveyors	OR-B-01-ST1105	0.05
CDB2 wet coal feed hopper discharge, vibratory feeder, and associated drag conveyors	OR-B-01-ST2105	0.11
dry coal storage silo	OR-B-02-ST1070	0.03
dry coal storage silo	OR-B-02-ST2070	0.03
dry coal storage silo	OR-B-02-ST3070	0.03
dry coal storage silo	OR-B-02-ST4070	0.03
dry coal storage silo	OR-B-02-ST5070	0.03
blend #1 weigh feeders and drag conveyor	OR-B-03-ST1105	0.11
blend #1 feed hoppers and blend #1 hopper feed drag conveyors	OR-B-04-ST1105	0.03
CASP B - CBSBB		
Carborec crusher feed drag conveyors	OR-B-05-ST1205	0.11
weigh feeders and blend #2 drag conveyors	OR-B-05-ST1405	0.41
Carborec storage silo	OR-B-05-ST6070	0.04
blend #2 surge bin	OR-B-06-ST1405	0.04
blend #2 weigh feeders, blend #2 drag conveyors, blend #2 crushers, hi-intensive mixers, pug mills, densifers, billet belt conveyors, billet roller screener, and billet fines weigh feeder	OR-B-06-ST1205	0.11
CASP C - RMRHSC		
CDC1 wet coal feed hopper discharge, vibratory feeder, and associated drag conveyors	OR-C-01-ST1105	0.05
CDC2 wet coal feed hopper discharge, vibratory feeder, and associated drag conveyors	OR-C-01-ST2105	0.11
dry coal storage silo	OR-C-02-ST1070	0.03
dry coal storage silo	OR-C-02-ST2070	0.03
dry coal storage silo	OR-C-02-ST3070	0.03

Facilities	Stack ID	PM/ PM10/ PM2.5 (lb/hr each)
dry coal storage silo	OR-C-02-ST4070	0.03
dry coal storage silo	OR-C-02-ST5070	0.03
blend #1 weigh feeders and drag conveyor	OR-C-03-ST1105	0.11
blend #1 feed hoppers and blend #1 hopper feed drag conveyors	OR-C-04-ST1105	0.03
CASP C - CBSBC		
Carborec crusher feed drag conveyors	OR-C-05-ST1205	0.11
weigh feeders and blend #2 drag conveyors	OR-C-05-ST1405	0.41
Carborec storage silo	OR-C-05-ST6070	0.04
blend #2 surge bin	OR-C-06-ST1405	0.04
blend #2 weigh feeders, blend #2 drag conveyors, blend #2 crushers, hi-intensive mixers, pug mills, densifers, billet belt conveyors, billet roller screener, and billet fines weigh feeder	OR-C-06-ST1205	0.11
CASP D - RMRHSD		
CDD1 wet coal feed hopper discharge, vibratory feeder, and associated drag conveyors	OR-D-01-ST1105	0.05
CDD2 wet coal feed hopper discharge, vibratory feeder, and associated drag conveyors	OR-D-01-ST2105	0.11
dry coal storage silo	OR-D-02-ST1070	0.03
dry coal storage silo	OR-D-02-ST2070	0.03
dry coal storage silo	OR-D-02-ST3070	0.03
dry coal storage silo	OR-D-02-ST4070	0.03
dry coal storage silo	OR-D-02-ST5070	0.03
blend #1 weigh feeders and drag conveyor	OR-D-03-ST1105	0.11
blend #1 feed hoppers and blend #1 hopper feed drag conveyors	OR-D-04-ST1105	0.03
CASP D - CBSBD		
Carborec crusher feed drag conveyors	OR-D-05-ST1205	0.11
weigh feeders and blend #2 drag conveyors	OR-D-05-ST1405	0.41
Carborec storage silo	OR-D-05-ST6070	0.04
blend #2 surge bin	OR-D-06-ST1405	0.04
blend #2 weigh feeders, blend #2 drag conveyors, blend #2 crushers, hi-intensive mixers, pug mills, densifers, billet belt conveyors, billet roller screener, and billet fines weigh feeder	OR-D-06-ST1205	0.11

Compliance with these limits, in conjunction with other limits taken as part of the CASP modification (SSM 089-22848-00121 and SPM 089-29236-00121), will ensure the following:

(b) The PM and PM10 net emissions increase from the CASP modifications (SSM 089-22848-00121 and SPM 089-29236-00121) shall be less than twenty-five (25) and fifteen (15) tons, respectively, per twelve (12) consecutive month period, with compliance determined at the end of each month. Therefore, the requirements of 326 IAC 2-2 (PSD) are rendered not applicable to these modifications.

(c) The PM2.5 net emissions increase from the CASP modifications (SSM 089-22848-00121 and SPM 089-29236-00121) shall be less than ten (10) tons per twelve (12) consecutive

month period, with compliance determined at the end of each month. Therefore, the requirements of 326 IAC 2-1.1-5 (Nonattainment NSR) are rendered not applicable to these modifications.

D.19.1.1 Prevention of Significant Deterioration (PSD) Minor Limit PM/PM10 [326 IAC 2-2]
Nonattainment New Source Review (NSR) Minor Limit PM2.5/SO2 [326 IAC 2-1.1-5]

On June 27, 2008, the U.S. EPA issued Notices of Violation (NOV) to the Permittee for alleged violations regarding excess emissions from the coke oven batteries. Therefore the Permit Shield in Section B - Permit Shield does not shield the Permittee from possible enforcement actions initiated by U.S. EPA, IDEM or citizens. Compliance with the terms of this permit does not serve as proof of compliance for the emission units or the matters addressed in the NOVs. Following resolution of this enforcement action, IDEM will reopen this permit, if necessary, to incorporate a compliance schedule or any new applicable requirements. The standard language of Section B - Permit Shield does not shield any activity on which the permit is silent.

D.19.2 Particulate Emission Limitation [326 IAC 6.8-1-2(a)]

Pursuant to 326 IAC 6.8-1-2(a), the Permittee shall not allow or permit discharge to the atmosphere any gases which contain particulate matter in excess of 0.03 grain per dry standard cubic foot (dscf) from each of the facilities listed in this section.

Compliance Determination Requirements

D.19.3 Particulate Control

(a) In order for all units to comply with Conditions D.19.1 and D.19.2, each baghouse listed in this section shall be in operation and controlling particulate at all times when its associated facility/emissions unit is in operation.

(b) In the event that bag failure is observed in a multi-compartment baghouse, if operations will continue for ten (10) days or more after the failure is observed before the failed units will be repaired or replaced, the Permittee shall promptly notify the IDEM, OAQ of the expected date the failed units will be repaired or replaced. The notification shall also include the status of the applicable compliance monitoring parameters with respect to normal, and the results of any response actions taken up to the time of notification.

D.19.4 Testing Requirements [326 IAC 2-7-6(1),(6)][326 IAC 2-1.1-11]

(a) Not later than 180 days after the startup of CASP A, the Permittee shall perform PM, PM10, and PM2.5 testing of either the coal crusher and associated crushed coal conveyors, identified as CCA1, or the coal crusher and associated crushed coal conveyors, identified as CCA2 for the purpose of determining compliance with Condition D.19.1(a), utilizing methods approved by the commissioner. This test shall be repeated at least once every 5 years from the date of the most recent valid compliance demonstration.

Subsequent testing shall be conducted for the coal crusher and associated conveyors (CCA1 or CCA2) not tested in the most recent compliance demonstration.

(b) Not later than 180 days after the startup of CASP A, the Permittee shall perform PM, PM10, and PM2.5 testing of either the coal dryer and associated dried coal conveyors, identified as CDA1, or the coal dryer and associated dried coal conveyors, identified as CDA2 for the purpose of determining compliance with Condition D.19.1(a), utilizing methods approved by the commissioner. This test shall be repeated at least once every 5 years from the date of the most recent valid compliance demonstration..

Subsequent testing shall be conducted for the coal dryer and associated conveyors (CDA1 or CDA2) not tested in the most recent compliance demonstration.

(c) Not later than 180 days after the startup of CASP A, the Permittee shall perform PM, PM10, and PM2.5 testing of one (1) of the five (5) dry coal bins, identified under RMRHSA for the purpose of determining compliance with Condition D.19.1(a), utilizing methods approved by the commissioner . This test shall be repeated at least once every 5 years from the date of the most recent valid compliance demonstration..

Until such time that all five (5) dry coal bins have been tested once, subsequent testing shall be conducted for a dry coal bin that has not yet demonstrated compliance. After such time that all five (5) dry coal bins have been tested, testing shall be conducted for the dry coal bin with the longest lapse in time since the most recent compliance demonstration.

(d) Not later than 180 days after the startup of CASP A, the Permittee shall perform PM, PM10, and PM2.5 testing of the three (3) blend #2 weigh feeders, three (3) blend #2 drag conveyors, three (3) blend #2 crushers, three (3) hi-intensive mixers, three (3) pug mills, and three (3) densifers, billet belt conveyors, one (1) billet roller screener, and one (1) billet fines weigh feeder, identified under CBSBA for the purpose of determining compliance with Condition D.19.1(a), utilizing methods approved by the commissioner. This test shall be repeated at least once every 5 years from the date of the most recent valid compliance demonstration.

(e) Not later than 180 days after the startup of CASP B, the Permittee shall perform PM testing of either the coal crusher and associated crushed coal conveyors, identified as CCB1, or the coal crusher and associated crushed coal conveyors, identified as CCA2 for the purpose of determining compliance with Condition D.19.1(a), utilizing methods approved by the commissioner. This test shall be repeated at least once every 5 years from the date of the most recent valid compliance demonstration.

Subsequent testing shall be conducted for the coal crusher and associated conveyors (CCB1 or CCB2) not tested in the most recent compliance demonstration.

(f) Not later than 180 days after the startup of CASP B, the Permittee shall perform PM, PM10, and PM2.5 testing of either the coal dryer and associated dried coal conveyors, identified as CDB1, or the coal dryer and associated dried coal conveyors, identified as CDB2 for the purpose of determining compliance with Condition D.19.1(a), utilizing methods approved by the commissioner. This test shall be repeated at least once every 5 years from the date of the most recent valid compliance demonstration.

Subsequent testing shall be conducted for the coal dryer and associated conveyors (CDB1 or CDB2) not tested in the most recent compliance demonstration.

(g) Not later than 180 days after the startup of CASP B, the Permittee shall perform PM, PM10, and PM2.5 testing of one (1) of the five (5) dry coal bins, identified under RMRHSB for the purpose of determining compliance with Condition D.19.1(a), utilizing methods approved by the commissioner. This test shall be repeated at least once every 5 years from the date of the most recent valid compliance demonstration.

Until such time that all five (5) dry coal bins have been tested once, subsequent testing shall be conducted for a dry coal bin that has not yet demonstrated compliance. After such time that all five (5) dry coal bins have been tested, testing shall be conducted for the dry coal bin with the longest lapse in time since the most recent compliance demonstration.

(h) Not later than 180 days after the startup of CASP B, the Permittee shall perform PM, PM10, and PM2.5 testing of the three (3) blend #2 weigh feeders, three (3) blend #2 drag

conveyors, three (3) blend #2 crushers, three (3) hi-intensive mixers, three (3) pug mills, and three (3) densifers, billet belt conveyors, one (1) billet roller screener, and one (1) billet fines weigh feeder, identified under CBSBB for the purpose of determining compliance with Condition D.19.1(a), utilizing methods approved by the commissioner. This test shall be repeated at least once every 5 years from the date of the most recent valid compliance demonstration.

(i) Not later than 180 days after the startup of CASP C, the Permittee shall perform PM, PM10, and PM2.5 testing of either the coal crusher and associated crushed coal conveyors, identified as CCC1, or the coal crusher and associated crushed coal conveyors, identified as CCC2 for the purpose of determining compliance with Condition D.19.1(a), utilizing methods approved by the commissioner. This test shall be repeated at least once every 5 years from the date of the most recent valid compliance demonstration.

Subsequent testing shall be conducted for the coal crusher and associated conveyors (CCC1 or CCC2) not tested in the most recent compliance demonstration.

(j) Not later than 180 days after the startup of CASP C, the Permittee shall perform PM, PM10, and PM2.5 testing of either the coal dryer and associated dried coal conveyors, identified as CDC1, or the coal dryer and associated dried coal conveyors, identified as CDC2 for the purpose of determining compliance with Condition D.19.1(a), utilizing methods approved by the commissioner. This test shall be repeated at least once every 5 years from the date of the most recent valid compliance demonstration.

Subsequent testing shall be conducted for the coal dryer and associated conveyors (CDC1 or CDC2) not tested in the most recent compliance demonstration.

(k) Not later than 180 days after the startup of CASP C, the Permittee shall perform PM, PM10, and PM2.5 testing of one (1) of the five (5) dry coal bins, identified under RMRHSC, utilizing methods approved by the commissioner. This test shall be repeated at least once every 5 years from the date of the most recent valid compliance demonstration.

Until such time that all five (5) dry coal bins have been tested once, subsequent testing shall be conducted for a dry coal bin that has not yet demonstrated compliance. After such time that all five (5) dry coal bins have been tested, testing shall be conducted for the dry coal bin with the longest lapse in time since the most recent compliance demonstration.

(l) Not later than 180 days after the startup of CASP C, the Permittee shall perform PM, PM10, and PM2.5 testing of the three (3) blend #2 weigh feeders, three (3) blend #2 drag conveyors, three (3) blend #2 crushers, three (3) hi-intensive mixers, three (3) pug mills, and three (3) densifers, billet belt conveyors, one (1) billet roller screener, and one (1) billet fines weigh feeder, identified under CBSBC, for the purpose of determining compliance with Condition D.19.1(a), utilizing methods approved by the commissioner. This test shall be repeated at least once every 5 years from the date of the most recent valid compliance demonstration.

(m) Not later than 180 days after the startup of CASP D, the Permittee shall perform PM, PM10, and PM2.5 testing of either the coal crusher and associated crushed coal conveyors, identified as CCD1, or the coal crusher and associated crushed coal conveyors, identified as CCD2, for the purpose of determining compliance with Condition D.19.1(a), utilizing methods approved by the commissioner. This test shall be repeated at least once every 5 years from the date of the most recent valid compliance demonstration.

Subsequent testing shall be conducted for the coal crusher and associated conveyors (CCD1 or CCD2) not tested in the most recent compliance demonstration.

(n) Not later than 180 days after the startup of CASP D, the Permittee shall perform PM, PM10, and PM2.5 testing of either the coal dryer and associated dried coal conveyors, identified as CDDB1, or the coal dryer and associated dried coal conveyors, identified as CDD2, for the purpose of determining compliance with Condition D.19.1(a), utilizing methods approved by the commissioner. This test shall be repeated at least once every 5 years from the date of the most recent valid compliance demonstration.

Subsequent testing shall be conducted for the coal dryer and associated conveyors (CDD1 or CDD2) not tested in the most recent compliance demonstration.

(o) Not later than 180 days after the startup of CASP D, the Permittee shall perform PM, PM10, and PM2.5 testing of one (1) of the five (5) dry coal bins, identified under RMRHSD, for the purpose of determining compliance with Condition D.19.1(a), utilizing methods approved by the commissioner. . This test shall be repeated at least once every 5 years from the date of the most recent valid compliance demonstration.

Until such time that all five (5) dry coal bins have been tested once, subsequent testing shall be conducted for a dry coal bin that has not yet demonstrated compliance. After such time that all five (5) dry coal bins have been tested, testing shall be conducted for the dry coal bin with the longest lapse in time since the most recent compliance demonstration.

(p) Not later than 180 days after the startup of CASP D, the Permittee shall perform PM, PM10, and PM2.5 testing of the three (3) blend #2 weigh feeders, three (3) blend #2 drag conveyors, three (3) blend #2 crushers, three (3) hi-intensive mixers, three (3) pug mills, and three (3) densifers, billet belt conveyors, one (1) billet roller screener, and one (1) billet fines weigh feeder, identified under CBSBD for the purpose of determining compliance with Condition D.19.1(a), utilizing methods approved by the commissioner. This test shall be repeated at least once every 5 years from the date of the most recent valid compliance demonstration.

Testing shall be conducted in accordance with the provisions of 326 IAC 3-6 (Source Sampling Procedures). Section C – Performance Testing contains the Permittee's obligation with regard to the performance testing required by this condition.

Compliance Monitoring Requirements [326 IAC 2-7-6(1)] [326 IAC 2-7-5(1)]

D.19.5 Visible Emissions Notations

(a) Visible emission notations of all the baghouse stack exhausts listed in this section shall be performed once per day during normal daylight operations. A trained employee shall record whether emissions are normal or abnormal.

(b) For processes operated continuously, "normal" means those conditions prevailing, or expected to prevail, at least eighty percent (80%) of the time the process is in operation, not counting startup or shut down time.

(c) In the case of batch or discontinuous operations, readings shall be taken during that part of the operation that would normally be expected to cause the greatest emissions.

(d) A trained employee is an employee who has worked at the plant at least one (1) month and has been trained in the appearance and characteristics of normal visible emissions for that specific process.

(e) If abnormal missions are observed, the Permittee shall take a reasonable response. Section C- Response to Excursions or Exceedances contains the Permittee's obligation with regard to the reasonable response steps required by this condition. An abnormal reading is not a deviation from this permit. Failure to take response steps shall be considered a deviation from this permit.

D.19.6 Parametric Monitoring Notations

The Permittee shall record the pressure drop across each baghouse listed in this section, at least once per day when the associated facility/emissions unit is in operation. When for any one reading, the pressure drop across a baghouse is outside the normal range, the Permittee shall take a reasonable response. The normal range for this unit is a pressure drop between 1.0 and 6.0 inches of water unless a different upper-bound or lower-bound value for this range is determined during the latest stack test Section C - Response to Excursions or Exceedances contains the Permittee's obligation with regard to the reasonable response steps required by this condition. A pressure reading that is outside the above mentioned range is not a deviation from this permit. Failure to take response steps, shall be considered a deviation from this permit.

The instruments used for determining the pressure shall comply with Section C - Instrument Specifications, of this permit, shall be subject to approval by IDEM, OAQ, and shall be calibrated or replaced at least once every six (6) months or other time period specified by the manufacturer. The Permittee shall maintain records of the manufacturer specifications, if used.

D.19.7 Broken or Failed Bag Detection

(a) For a single compartment baghouse controlling emissions from a process operated continuously, a failed unit and the associated process shall be shut down immediately until the failed units have been repaired or replaced. Operations may continue only if the event qualifies as an emergency and the Permittee satisfies the requirements of the emergency provisions of this permit (Section B - Emergency Provisions).

(b) For a single compartment baghouse controlling emissions from a batch process, the feed to the process shall be shut down immediately until the failed unit has been repaired or replaced. The emissions unit shall be shut down no later that the completion of the processing of the material in the line or emissions unit. Operations may continue only if the event qualifies as an emergency and the Permittee satisfies the requirements of the emergency provisions of this permit (Section B - Emergency Provisions).

Bag failure can be indicated by a significant drop in the baghouse's pressure reading with abnormal visible emissions, by an opacity violation, or by other means such as gas temperature, flow rate, air infiltration, leaks, dust traces or triboflows.

Record Keeping and Reporting Requirement [326 IAC 2-7-5(3)] [326 IAC 2-7-19]

D.19.8 Record Keeping Requirements

(a) To demonstrate the compliance status with Condition D.19.1, for each baghouse listed in this section, the Permittee shall maintain records of the manufacturer's specifications. Records shall be complete and sufficient to demonstrate the compliance status with the PM, PM10, and PM2.5 emission limits established in Condition D.19.1.

(b) To document the compliance status with Condition D.19.5, the Permittee shall maintain daily records of the visible emission notations of the stack exhaust of each baghouse listed in this section. The Permittee shall include in its daily record when a visible emission notation is not taken and the reason for the lack of a visible emission notation, (i.e. the process did not operate that day).

(c) To document the compliance status with Condition D.19.6, the Permittee shall maintain daily records of the pressure drop across each baghouse listed in this section. The Permittee shall include in its daily record when a pressure drop reading is not taken and the reason for the lack of a pressure drop reading, (i.e. the process did not operate that day).

(d) Section C - General Record Keeping Requirements contains the Permittee's obligation with regard to the records required by this condition.

Section D.20 **FACILITY OPERATION CONDITIONS**

Emission Unit Description: CASP Billet and Product Handling
Note: Complete Descriptions are shown in Section A.2.

CASP A

(l) One (1) billet transfer area, with emissions uncontrolled, consisting of the following:

(1) One (1) billet fines hopper, identified as OR-A-06-HP1125.
(2) Three (3) billet fines open belt conveyors, identified as OR-A-06-CB1130, OR-A-06-CB1140, and OR-A-06- CB 1145.
(3) One (1) billet belt conveyor, identified as OR-A-06-CB1110.
(4) One (1) billet hopper, identified as OR-A-06-HP1115.
(5) Four (4) billet belt conveyors, identified as OR-A-06-CB1120, OR-A-06-CB2120, OR-A-06-CB1126, and OR-A-06-CB2126.
(6) Two (2) billet vibratory feeders, identified as OR-A-06-VF1125 and OR-A-06-VF2125.
(7) Two (2) trolley car loading stations, collectively identified as OR-A-06-LD1128.
(8) One (1) billet hopper, identified as OR-A-06-HP1135, and five (5) belt conveyors, identified as OR-A-06-CB1150, OR-A-06-CB1160, OR-A-06-CB1170, OR-A-06-CB1180, and OR-A-06-CB1190.

(o) One (1) Finish Product Handling and Loading process, approved for construction in 2010, with emissions uncontrolled, consisting of the following equipment:

(1) Four (4) Cokonyx belt conveyors, identified as OR-A-08-CB1020, OR-A-08-CB1030, OR-A-08-CB2020, and OR-A-08-CB2030.
(2) One (1) Cokonyx belt conveyor, identified as OR-A-08-CD1035.

CASP B

(l) One (1) billet transfer area, with emissions uncontrolled, consisting of the following:

(1) One (1) billet fines hopper, identified as OR-B-06-HP1125.
(2) Three (3) billet fines open belt conveyors, identified as OR-B-06- CB 1130, OR-B-06- CB 1140, and OR-B-06- CB 1145.
(3) One (1) billet belt conveyor, identified as OR-B-06-CB1110.
(4) One (1) billet hopper, identified as OR-B-06-HP1115.
(5) Four (4) billet belt conveyors, identified as OR-B-06-CB1120, OR-B-06-CB2120, OR-B-06-CB1126, and OR-B-06-CB2126.
(6) Two (2) billet vibratory feeders, identified as OR-B-06-VF1125 and OR-B-06-VF2125.
(7) Two (2) trolley car loading stations, collectively identified as OR-B-06-LD1128.
(8) One (1) billet hopper, identified as OR-B-06-HP1135, and five (5) belt conveyors, identified as OR-B-06-CB1150, OR-B-06-CB1160, OR-B-06-CB1170, OR-B-06-CB1180, and OR-B-06-CB1190.

(o) One (1) Finish Product Handling and Loading process, with emissions uncontrolled, consisting of the following equipment:

(1) Four (4) Cokonyx belt conveyors, identified as OR-B-08-CB1020, OR-B-08-CB1030, OR-B-08-CB2020, and OR-B-08-CB2030.
(2) One (1) Cokonyx belt conveyor, identified as OR-B-08-CD1035.

CASP C

(l) One (1) billet transfer area, with emissions uncontrolled, consisting of the following:

(1) Two (2) billet fines open belt conveyors, identified as OR-C-06- CB 1140 and OR-C-06-CS 1145.
(2) One (1) billet belt conveyor, identified as OR-C-06-CB1110.
(3) One (1) billet belt conveyor~~s~~, identified as OR-C-06-CB1120.
(4) One (1) billet shuttle belt, identified as OR-C-CB1125.
(5) Two (2) trolley car loading stations, collectively identified as OR-C-06-LD1128.

(o) One (1) Finish Product Handling and Loading process, with emissions uncontrolled, consisting of the following equipment:

(1) Four (4) Cokonyx belt conveyors, identified as OR-C-08-CB1020, OR-C-08-CB1030, OR-C-08-CB2020, and OR-C-08-CB2030.
(2) One (1) Cokonyx belt conveyor, identified as OR-C-08-CD1035.

CASP D

(l) One (1) billet transfer area, with emissions uncontrolled, consisting of the following:

(1) One (1) billet fines hopper, identified as OR-D-06-HP1125.
(2) Three (3) billet fines open belt conveyors, identified as OR-D-06- CB 1130, OR-D-06- CB 1140, and OR-D-06- CB 1145.
(3) One (1) billet belt conveyor, identified as OR-D-06-CB1110.
(4) One (1) billet hopper, identified as OR-D-06-HP1115.
(5) Four (4) billet belt conveyors, identified as OR-D-06-CB1120, OR-D-06-CB2120, OR-D-06-CB1126, and OR-D-06-CB2126.
(6) Two (2) billet vibratory feeders, identified as OR-D-06-VF1125 and OR-D-06-VF2125.
(7) Two (2) trolley car loading stations, collectively identified as OR-D-06-LD1128.
(8) One (1) billet hopper, identified as OR-D-06-HP1135, and five (5) belt conveyors, identified as OR-D-06-CB1150, OR-D-06-CB1160, OR-D-06-CB1170, OR-D-06-CB1180, and OR-D-06-CB1190.

(o) One (1) Finish Product Handling and Loading process, with emissions uncontrolled, consisting of the following equipment:

(1) Four (4) Cokonyx belt conveyors, identified as OR-D-08-CB1020, OR-D-08-CB1030, OR-D-08-CB2020, and OR-D-08-CB2030.
(2) One (1) Cokonyx belt conveyor, identified as OR-D-08-CD1035.

CASP Coal Receiving and Handling

(a) Phase 1 CASP C and CASP D coal handling, approved for construction in 2010, consisting of the following:

(1) One (1) feed hopper and conveyor No.1 (PHS1-HC1), with emissions uncontrolled.
(2) Two (2) CASP C coal conveyors, identified as PHS1C-C1**,** and PHS1C-C2, each with a maximum rate of 100 tons per hour, with emissions uncontrolled.
(3) One (1) CASP C coal feed hopper No.2, identified as CASPC-FH2, with hopper receiving emissions uncontrolled.
(4) Two (2) CASP D coal conveyors, identified as PHS1D-C1 and PHS1D-C2, each with a maximum rate of 100 tons per hour, with emissions uncontrolled.
(5) One (1) CASP D coal feed hopper No.2, identified as CASPD-FH2, with hopper receiving emissions uncontrolled.

(b) Phase 2 CASP coal handling, approved for construction in 2010, consisting of the following:

(1) Two (2) CASP coal conveyors, identified as CASP-C1 and CASP-C2, with emissions uncontrolled.
(2) One (1) CASP rotary stacker CASP-RS1, with emissions uncontrolled.
(3) Four (4) CASP coal conveyor feed hoppers, identified as CASPA-FH1, CASPB-FH1, CASPC-FH1, and CASPD-FH1, with emissions uncontrolled.
(4) Two (2) CASP A coal conveyors, identified as CASPA-C1 and CASPA-C2, with emissions uncontrolled.
(5) One (1) CASP A coal feed hopper No.2, identified as CASPA-FH2, with hopper receiving emissions uncontrolled.
(6) Two (2) CASP B coal conveyors, identified as CASPB-C1 and CASPB-C2, with emissions uncontrolled.
(7) One (1) CASP B coal feed hopper No.2, identified as CASPB-FH2, with hopper receiving emissions uncontrolled.
(8) Two (2) CASP C coal conveyors, identified as CASPC-C1 and CASPC-C2, with emissions uncontrolled.
(9) Two (2) CASP D coal conveyors, identified as CASPD-C1 and CASPD-C2, with emissions uncontrolled.

(c) Storage Piles

(1) One (1) PHS1 intermediate coal storage pile No. 1.
(2) Four (4) PHS1 coal storage piles.
(3) One (1) PHS1 intermediate coal storage pile No. 2.
(4) Four (4) CASP coal storage piles.

CASP Cokonyx Loadout

(a) Two (2) single deck vibratory screener feeders for CASP A, identified as CASPA-VF1 and CASPA-VF2, with emissions controlled by water suppression, as needed, and ducted to the PFR afterburners (PFRAB A1 and PFRAB A2) for heat recovery.
(b) Two (2) single deck vibratory screener feeders for CASP B, identified as CASPB-VF1 and CASPB-VF2, with emissions controlled by water suppression, as needed, and ducted to the PFR afterburners (PFRAB B1 and PFRAB B2) for heat recovery).
(c) Two (2) single deck vibratory screener feeders for CASP C, identified as CASPC-VF1 and CASPC-VF2, with emissions controlled by water suppression, as needed, and ducted to the PFR afterburners (PFRAB C1 and PFRAB C2) for heat recovery.
(d) Two (2) single deck vibratory screener feeders for CASP D, identified as CASPD-VF1 and CASPD-VF2, with emissions controlled by water suppression, as needed, and ducted to the PFR afterburners (PFRAB D1 and PFRAB D2) for heat recovery).
(e) Two (2) emergency product by-pass bunkers for CASP A, identified as CASPA-EB1 and CASPA-EB2, with emissions uncontrolled.
(f) Two (2) emergency product by-pass bunkers for CASP B, identified as CASPB-EB1 and CASPB-EB2, with emissions uncontrolled.
(g) Two (2) emergency product by-pass bunkers for CASP C, identified as CASPC-EB1 and CASPC-EB2, with emissions uncontrolled.
(h) Two (2) emergency product by-pass bunkers for CASP D, identified as CASPD-EB1 and CASPD-EB2, with emissions uncontrolled.
(i) Two (2) Cokonyx loadout conveyors for CASP A, identified as CKNXC-A1 and CKNXC-A2, with emissions uncontrolled.
(j) Two (2) Cokonyx loadout conveyors for CASP B, identified as CKNXC-B1 and CKNXC-B2, with emissions uncontrolled.
(k) Two (2) Cokonyx loadout conveyors for CASP C, identified as CKNXC-C1 and CKNXC-C2, with emissions uncontrolled.

(l) Two (2) Cokonyx loadout conveyors for CASP D, identified as CKNXC-D1 and CKNXC-D2, with emissions uncontrolled.
(m) One (1) C/D Cokonyx conveyor, identified as CKNXC-C/D, with emissions uncontrolled.
(n) One (1) A/B Cokonyx conveyor, identified as CKNXC-A/B, with emissions uncontrolled.
(o) Two (2) C/D Cokonyx surge bins, collectively identified as CKNXBin-C/D1, with emissions uncontrolled.
(p) Two (2) A/B Cokonyx surge bins, collectively identified as CKNXBin-A/B1, with emissions uncontrolled.
(q) Storage Piles

(1) CASP A/B Cokonyx Emergency Storage Pile.
(2) CASP C/D Cokonyx Emergency Storage Pile.

Insignificant Activities

(d) Specifically regulated insignificant activities (Carbon Alloy Synthesis Plants):

CASP Coal Receiving and Handling

(1) Two (2) CASP C coal conveyors, approved for construction in 2012, identified as PHS1C-C3, and PHS1C-C4, each with a maximum rate of 100 tons per hour, with emissions uncontrolled.

(2) Two (2) CASP D coal conveyors, approved for construction in 2012, identified as PHS1C-D3, and PHS1C-D4, each with a maximum rate of 100 tons per hour, with emissions uncontrolled.

(The information describing the process contained in this facility description box is descriptive information and does not constitute enforceable conditions.)

Emission Limitations and Standards

D.20.1 Prevention of Significant Deterioration (PSD) Minor Limit PM/PM10 [326 IAC 2-2]
Nonattainment New Source Review (NSR) Minor Limit PM2.5 [326 IAC 2-1.1-5]

Pursuant to 326 IAC 2-2 (PSD) and 326 IAC 2-1.1-5 (Nonattainment New Source Review), and in order to render the requirements of 326 IAC 2-2 (PSD) and 326 IAC 2-1.1-5 (Nonattainment NSR) not applicable to the Carbon Alloy Synthesis Plant (CASP) modifications (Significant Source Modification (SSM) No. 089-28848-00121 and Significant Permit Modification (SPM) No. 089-29236-00121), the Permittee shall comply with the following:

(a) The input of coal to the following facilities shall be less than the limited amount per twelve (12) consecutive month period with compliance determined at the end of each month. The PM emissions shall not exceed 1.68 pounds per kton of coal input, the PM_{10} emissions shall not exceed 0.79 pound per kton of coal input, and the $PM_{2.5}$ emissions shall not exceed 0.12 pound per kton of coal input.

Facility Description	Facility ID (if Applicable)	Limited Input (tons per 12 month period)
Phase 1 CASP C/D Coal Feed Path		
PHS1 intermediate storage pile #1	n/a	750,000
phase 1 coal piles (4 piles)	n/a	750,000 (combined)
CASP C/D hopper feeder & conveyor	PHS1-HC1	750,000
PHS1 intermediate storage pile #2	n/a	750,000

Phase 1 CASP C Coal Feed Path		
CASP C coal feed conveyors	PHS1C-C1, PHS1C-C2	375,000 (each)
Phase 1 CASP D Coal Feed Path		
CASP D coal conveyors	PHS1D-C1, PHS1D-C2	375,000 (each)
Phase 2 CASP A/B/C/D Coal Feed Path		
CASP coal conveyors and CASP rotary stacker	CASP-C1, CASP-C2, CASP-RS1	1,500,000 (each)
four (4) CASP coal storage piles	n/a	1,500,000
Phase 2 CASP C Coal Feed Path		
CASP C - coal feed hopper No.1 and coal conveyors	CASPC-FH1 CASPC-C1, CASPC-C2	375,000 (each)
Phase 2 CASP D Coal Feed Path		
CASP D coal feed hopper No.1 and coal conveyors	CASPD-FH1, CASPD-C1, CASPD-C2	375,000 (each)

(1) The amount of coal handled by the Phase 1 CASP C/D Coal Feed Path facilities (PHS1 intermediate storage pile #1, phase 1 coal piles, PHS1-HC1, PHS1 intermediate storage pile #2) and the Phase 2 CASP A/B/C/D Coal Feed Path facilities (CASP-C1, CASP-C2, CASP-RS1, and CASP coal storage piles) shall be less than 1,500,000 tons per twelve (12) consecutive month period with compliance determined at the end of each month.

(2) The amount of coal handled by the Phase 1 CASP C Coal Feed Path facilities (PHS1C-C1 and PHS1C-C2) and the Phase 2 CASP C Coal Feed Path facilities (CASPC-FH1, CASPC-C1, and CASPC-C2) shall be less than 375,000 tons per twelve (12) consecutive month period with compliance determined at the end of each month.

(3) The amount of coal handled by the Phase 1 CASP D Coal Feed Path facilities (PHS1D-C1 and PHS1D-C2) and the Phase 2 CASP D Coal Feed Path facilities (CASPD-FH1, CASPD-C1, and CASPD-C2) shall be less than 375,000 tons per twelve (12) consecutive month period with compliance determined at the end of each month.

(b) The input of coal to the following facilities shall be less than the limited amount per twelve (12) consecutive month period with compliance determined at the end of each month. The PM emissions shall not exceed 1.68 pounds per kton of coal input, the PM_{10} emissions shall not exceed 0.79 pound per kton of coal input, and the $PM_{2.5}$ emissions shall not exceed 0.12 pound per kton of coal input.

Facility Description	Facility ID	Limited Input (tons per 12 month period)
CASP A - feed hopper, Conv. #1, Conv. #2, and coal feed hopper	CASPA-FH1, CASPA-C1 CASPA-C2, CASPA-FH2	375,000 (each)
CASP B - feed hopper, Conv. #1, Conv. #2, and coal feed hopper	CASPB-FH1, CASPB-C1 CASPB-C2, CASPB-FH2	375,000 (each)
CASP C coal feed hopper No.2	CASPC-FH2	375,000
CASP D coal feed hopper No.2	CASPD-FH2	375,000

(c) The input of billets or billet fines to the following facilities shall be less than the limited amount per twelve (12) consecutive month period with compliance determined at the end of each month. The PM emissions shall not exceed 0.41 pound per kton of material input, the PM_{10} emissions shall not exceed 0.19 pound per kton of material input, and the $PM_{2.5}$ emissions shall not exceed 0.03 pound per kton of material input.

Facility Description	Facility ID (if Applicable)	Limited Input (tons per 12 month period)
CASP A - Billet Transfer Area		
billet fines hopper, and three (3) billet fine conveyors	OR-A-06-HP1125, OR-A-06-CB1130, OR-A-06-CB1140, OR-A-06-CB1145	50,000 (each)
billet drag conveyer and billet hopper	OR-A-06-CD1110, OR-A-06-HP1115,	375,000 (each)
billet belt conveyors	OR-A-06-CB1120, OR-A-06-CB1126	375,000 (combined)
billet belt conveyors	OR-A-06-CB2120, OR-A-06-CB2126	375,000 (combined)
billet vibratory feeders	OR-A-06-VF1125, OR-A-06-VF2126	375,000 (combined)
two (2) trolley loading pans	OR-A-06-LD1128	375,000 (combined)
two (2) trolley cars	OR-A-06-LD1128	375,000 (combined)
billet hopper and five (5) billet drag conveyors	OR-A-06-HP1135, OR-A-06-CD1150, OR-A-06-CD1160, OR-A-06-CD1170, OR-A-06-CD1180, OR-A-06-CD1190	375,000 (each)
CASP B - Billet Transfer Area		
billet fines hopper, and three (3) billet fine conveyors	OR-B-06-HP1125, OR-B-06-CB1130, OR-B-06-CB1140, OR-B-06-CB1145	50,000 (each)
billet drag conveyer and billet hopper	OR-B-06-CD1110, OR-B-06-HP1115,	375,000 (each)
billet belt conveyors	OR-B-06-CB1120, OR-B-06-CB1126	375,000 (combined)
billet belt conveyors	OR-B-06-CB2120, OR-B-06-CB2126	375,000 (combined)
billet vibratory feeders	OR-B-06-VF1125, OR-B-06-VF2126	375,000 (combined)
two (2) trolley loading pans	OR-B-06-LD1128	375,000 (combined)
two (2) trolley cars	OR-B-06-LD1128	375,000 (combined)
billet hopper and five (5) billet drag conveyors	OR-B-06-HP1135, OR-B-06-CD1150, OR-B-06-CD1160, OR-B-06-CD1170, OR-B-06-CD1180, OR-B-06-CD1190	375,000 (each)
CASP C - Billet Transfer Area		
two (2) billet fine conveyors	OR-C-06-CB1140, OR-C-06-CS1145	50,000 (each)
billet belt conveyer	OR-C-06-CB1110	375,000
billet belt conveyor	OR-C-06-CB1120	375,000
two (2) trolley loading pans	OR-C-06-LD1128	375,000 (combined)

Facility Description	Facility ID (if Applicable)	Limited Input (tons per 12 month period)
two (2) trolley cars	OR-C-06-LD1128	375,000 (combined)
CASP D - Billet Transfer Area		
billet fines hopper, and three (3) billet fine conveyors	OR-D-06-HP1125, OR-D-06-CB1130, OR-D-06-CB1140, OR-D-06-CB1145	50,000 (each)
billet drag conveyer and billet hopper	OR-D-06-CD1110, OR-D-06-HP1115,	375,000 (each)
billet belt conveyors	OR-D-06-CB1120, OR-D-06-CB1126	375,000 (combined)
billet belt conveyors	OR-D-06-CB2120, OR-D-06-CB2126	375,000 (combined)
billet vibratory feeders	OR-D-06-VF1125, OR-D-06-VF2126	375,000 (combined)
two (2) trolley loading pans	OR-D-06-LD1128	375,000 (combined)
two (2) trolley cars	OR-D-06-LD1128	375,000 (combined)
billet hopper and five (5) billet drag conveyors	OR-D-06-HP1135, OR-D-06-CD1150, OR-D-06-CD1160, OR-D-06-CD1170, OR-D-06-CD1180, OR-D-06-CD1190	375,000 (each)

(d) The input of Cokonyx to the following facilities shall be less than the limited amount per twelve (12) consecutive month period with compliance determined at the end of each month. The PM emissions shall not exceed 1.90 pounds per kton of Cokonyx input, the PM_{10} emissions shall not exceed 0.90 pound per kton of Cokonyx input, and the $PM_{2.5}$ emissions shall not exceed 0.14 pound per kton of Cokonyx input.

Facility Description	Facility ID (if Applicable)	Limited Input (tons per 12 month period)
CASP A - Finish Product Handling & Loading Process		
Cokonyx belt conveyors	OR-A-08-CB1020, OR-A-08-CB1030	300,000 (combined)
Cokonyx belt conveyors	OR-A-08-CB2020, OR-A-08-CB2030	300,000 (combined)
Cokonyx belt conveyor	OR-A-08-CB1035	300,000
CASP B - Finish Product Handling & Loading Process		
Cokonyx belt conveyors	OR-B-08-CB1020, OR-B-08-CB1030	300,000 (combined)
Cokonyx belt conveyors	OR-B-08-CB2020, OR-B-08-CB2030	300,000 (combined)
Cokonyx belt conveyor	OR-B-08-CB1035	300,000
CASP C - Finish Product Handling & Loading Process		
Cokonyx belt conveyors	OR-C-08-CB1020, OR-C-08-CB1030	300,000 (combined)
Cokonyx belt conveyors	OR-C-08-CB2020, OR-C-08-CB2030	300,000 (combined)
Cokonyx belt conveyor	OR-C-08-CB1035	300,000

Facility Description	Facility ID (if Applicable)	Limited Input (tons per 12 month period)
CASP D - Finish Product Handling & Loading Process		
Cokonyx belt conveyors	OR-D-08-CB1020, OR-D-08-CB1030	300,000 (combined)
Cokonyx belt conveyors	OR-D-08-CB2020, OR-D-08-CB2030	300,000 (combined)
Cokonyx belt conveyor	OR-D-08-CB1035	300,000

(e) The input of Cokonyx to the following facilities shall be less than the limited amount per twelve (12) consecutive month period with compliance determined at the end of each month. The PM emissions shall not exceed 15.99 pounds per kton of Cokonyx input, the PM_{10} emissions shall not exceed 7.56 pounds per kton of Cokonyx input, and the $PM_{2.5}$ emissions shall not exceed 1.15 pounds per kton of Cokonyx input.

Facility Description	Facility ID (if Applicable)	Limited Input (tons per 12 month period)
CASP A - two (2) vibratory feeders	CASPA-VF1, CASPA-VF2	300,000 (combined)
CASP A - two (2) emergency bypass bunkers	CASPA-EB1, CASPA-EB2	300,000 (combined)
CASP A - Cokonyx conveyors	CKNXC-A1, CKNXC-A2	300,000 (combined)
CASP B - two (2) vibratory feeders	CASPB-VF1, CASPB-VF2	300,000 (combined)
CASP B - two (2) emergency bypass bunkers	CASPB-EB1, CASPA-EB2	300,000 (combined)
CASP A/B Emergency Storage Pile	n/a	600,000
CASP B - Cokonyx conveyors	CKNXC-B1, CKNXC-B2	300,000 (combined)
CASP A & B - Cokonyx conveyor	CKNXC-A/B	600,000
CASP A & B - Cokonyx storage bins	CKNXBin-A/B	600,000
CASP C - two (2) vibratory feeders	CASPC-VF1, CASPC-VF2	300,000 (combined)
CASP C - two (2) emergency bypass bunkers	CASPC-EB1, CASPC-EB2	300,000 (combined)
CASP C - Cokonyx conveyors	CKNXC-C1, CKNXC-C2	300,000 (combined)
CASP D - two (2) vibratory feeders	CASPD-VF1, CASPD-VF2	300,000 (combined)
CASP D - two (2) emergency bypass bunkers	CASPD-EB1, CASPD-EB2	300,000 (combined)
CASP C/D Emergency Storage Pile	n/a	600,000
CASP D - Cokonyx conveyors	CKNXC-D1, CKNXC-D2	300,000 (combined)
CASP C & D - Cokonyx conveyor	CKNXC-C/D	600,000
CASP C & D - Cokonyx storage bins	CKNXBin-C/D	600,000
Cokonyx loadout to railcar	CKNXLoadout	1,200,000

Compliance with these limits, in conjunction with other limits taken as part of the CASP modification (SSM 089-22848-00121 and SPM 089-29236-00121), will ensure the following:

(f) The PM and PM10 net emissions increase from the CASP modifications (SSM 089-22848-00121 and SPM 089-29236-00121) shall be less than twenty-five (25) and fifteen (15) tons, respectively, per twelve (12) consecutive month period, with compliance determined at the end of each month. Therefore, the requirements of 326 IAC 2-2 (PSD) are rendered not applicable to these modifications.

(g) The PM2.5 net emissions increase from the CASP modifications (SSM 089-22848-00121 and SPM 089-29236-00121) shall be less than ten (10) tons per twelve (12) consecutive month period, with compliance determined at the end of each month. Therefore, the requirements of 326 IAC 2-1.1-5 (Nonattainment NSR) are rendered not applicable to these modifications.

D.20.1.1 Prevention of Significant Deterioration (PSD) Minor Limit PM/PM10 [326 IAC 2-2]
Nonattainment New Source Review (NSR) Minor Limit PM2.5/SO2 [326 IAC 2-1.1-5]

On June 27, 2008, the U.S. EPA issued Notices of Violation (NOV) to the Permittee for alleged violations regarding excess emissions from the coke oven batteries. Therefore the Permit Shield in Section B - Permit Shield does not shield the Permittee from possible enforcement actions initiated by U.S. EPA, IDEM or citizens. Compliance with the terms of this permit does not serve as proof of compliance for the emission units or the matters addressed in the NOVs. Following resolution of this enforcement action, IDEM will reopen this permit, if necessary, to incorporate a compliance schedule or any new applicable requirements. The standard language of Section B - Permit Shield does not shield any activity on which the permit is silent.

D.20.2 Fugitive Dust Emission Limitations [326 IAC 6-4-2][326 IAC 6.8-10-3]

(a) Pursuant to 326 IAC 6-4-2:

(1) The billet transfer areas, finish product handling and loading processes, coal receiving and handling facilities, and cokonyx loadout facilities, roads and storage piles, shall be in violation of this rule (326 IAC 6-4) if any of the following criteria are violated:

(A) A source or combination of sources which cause to exist fugitive dust concentrations greater than sixty-seven percent (67%) in excess of ambient upwind concentrations as determined by the following formula:

$$P = \frac{100\,(R) - U)}{U}$$

Where
P = Percentage increase
R = Number of particles of fugitive dust measured at downward receptor site
U = Number of particles of fugitive dust measured at upwind or background site

(B) The fugitive dust is comprised of fifty percent (50%) or more respirable dust, then the percent increase of dust concentration in subdivision (1) of this section shall be modified as follows:

$$PR = (1.5 \pm N)\,P$$

Where
N = Fraction of fugitive dust that is respirable dust;
PR = allowable percentage increase in dust concentration above background; and

P = no value greater than sixty-seven percent (67%).

(C) The ground level ambient air concentrations exceed fifty (50) micrograms per cubic meter above background concentrations for a sixty (60) minute period.

(D) If fugitive dust is visible crossing the boundary or property line of a source. This subdivision may be refuted by factual data expressed in subdivisions (1), (2) or (3) of this section. 326 IAC 6-4-2(4) is not federally enforceable.

(2) Pursuant to 326 IAC 6-4-6(6) (Exceptions), fugitive dust from a source caused by adverse meteorological conditions will be considered an exception to this rule (326 IAC 6-4) and therefore not in violation.

(b) Pursuant to 326 IAC 6.8-10-3 Lake County Fugitive Particulate Matter Emissions Limitations, fugitive emissions from the billet transfer areas, finish product handling and loading processes, coal receiving and handling facilities, and cokonyx loadout facilities, roads and storage piles, shall comply with the emission limitations in Section C.5 - Fugitive Dust Emissions.

D.20.3 Particulate Emission Limitation [326 IAC 6.8-1-2(a)]

Pursuant to 326 IAC 6.8-1-2(a), the Permittee shall not allow or permit discharge to the atmosphere any gases which contain particulate matter in excess of 0.03 grain per dry standard cubic foot (dscf) from each of the billet shuttle belt (OR-C-06-CB1125) and two (2) trolley car loading stations (OR-C-06-LD1128).

Compliance Determination Requirements

D.20.4 Particulate Matter Control

Pursuant to 326 IAC 6.8-10-3 (Lake County Fugitive Particulate Matter Control Requirements), opacity from the activities shall be determined as follows:

(a) Paved Roads and Parking Lots
The average instantaneous opacity shall be the average of twelve (12) instantaneous opacity readings, taken for four (4) vehicle passes, consisting of three (3) opacity readings for each vehicle pass. The three (3) opacity readings for each vehicle pass shall be taken as follows:

(1) The first will be taken at the time of emission generation.

(2) The second will be taken five (5) seconds later.

(3) The third will be taken five (5) seconds later or ten (10) seconds after the first.

The three (3) readings shall be taken at the point of maximum opacity. The observer shall stand approximately fifteen (15) feet from the plume and at approximately right angles to the plume. Each reading shall be taken approximately four (4) feet above the surface of the roadway or parking area.

(b) Unpaved Roads and Parking Lots
The fugitive particulate emissions from unpaved roads shall be controlled by the implementation of a work program and work practice under the fugitive dust control plan.

(c) Batch Transfer
The average instantaneous opacity shall consist of the average of three (3) opacity readings taken five (5) seconds, ten (10) seconds, and fifteen (15) seconds after the end of one (1) batch loading or unloading operation. The three (3) readings shall be taken at the point of maximum opacity. The observer shall stand approximately fifteen (15) feet from the plume and at approximately right angles to the plume.

(d) Continuous Transfer of Material Unto and Out of Storage Piles
The opacity shall be determined using 40 CFR 60, Appendix A, Method 9. The opacity readings shall be taken at least four (4) feet from the point of origin.

(e) Wind Erosion from Storage Piles and Exposed Areas
The opacity shall be determined using 40 CFR 60, Appendix A, Method 9, except that the opacity shall be observed at approximately four (4) feet from the surface at the point of maximum opacity. The observer shall stand approximately fifteen (15) feet from the plume and at approximately right angles to the plume. The limitations may not apply during periods when application of fugitive particulate control measures is either ineffective or unreasonable due to sustained very high wind speeds. During such periods, the company must continue to implement all reasonable fugitive particulate control measures and maintain records documenting the application of measures and the basis for a claim that meeting the opacity limitation was not reasonable given prevailing wind conditions.

(f) Material Transported by Truck or Rail
Compliance with this limitation shall be determined by 40 CFR 60, Appendix A, Method 22, except that the observation shall be taken at approximately right angles to the prevailing wind from the leeward side of the truck or railroad car. Material transported by truck or rail that is enclosed and covered shall be considered in compliance with the in plant transportation requirement.

(g) Material Transported by Front End Loader or Skip Hoist
Compliance with this limitation shall be determined by the average of three (3) opacity readings taken at five (5) second intervals. The three (3) opacity readings shall be taken as follows:

(1) The first will be taken at the time of emission generation.

(2) The second will be taken five (5) seconds later.

(3) The third will be taken five (5) seconds later or ten (10) seconds after the first.

The three (3) readings shall be taken at the point of maximum opacity. The observer shall stand at least fifteen (15) feet from the plume approximately and at right angles to the plume. Each reading shall be taken approximately four (4) feet above the surface of the roadway or parking area.

(h) Material Processing Limitations

(1) Compliance with stack opacity limitations from material processing facilities shall be determined using 40 CFR 60, Appendix A, Method 9.

(2) Compliance with the opacity limitations for fugitive particulate emissions from material processing equipment, except from a crusher at which a capture system is not used, shall be determined using 40 CFR 60, Appendix A, Method 9.

(3) Compliance with the opacity limitations for fugitive particulate emissions from a crusher at which a capture system is not used, shall be determined using 40 CFR 60, Appendix A, Method 9.

(4) Compliance with the opacity limitations for fugitive particulate emissions from a building enclosing all or part of the material processing equipment, except from a vent in the building shall be determined using 40 CFR 60, Appendix A, Method 22.

(5) Compliance with the opacity limitations for fugitive particulate emissions from building vents shall be determined using 40 CFR 60, Appendix A, Method 5 or 17 or 40 CFR 60, Appendix A, Method 9.

(i) Dust Handling Equipment
Compliance with this standard shall be determined by 40 CFR 60, Appendix A, Method 9.

Record Keeping and Reporting Requirement [326 IAC 2-7-5(3)] [326 IAC 2-7-19]

D.20.5 Record Keeping Requirements

(a) To document the compliance status with Condition D.20.1(a), the Permittee shall maintain records of the coal input to each of the facilities listed in Condition D.20.1(a)(1).

(b) To document the compliance status with Condition D.20.1(a)(1), the Permittee shall maintain records of the coal handled by the Phase 1 CASP C/D Coal Feed Path and the Phase 2 CASP A/B/C/D Coal Feed Path.

(c) To document the compliance status with Condition D.20.1(a)(2), the Permittee shall maintain records of the coal handled by the Phase 1 CASP C Coal Feed Path and the Phase 2 CASP C Coal Feed Path.

(d) To document the compliance status with Condition D.20.1(a)(3), the Permittee shall maintain records of the coal handled by the Phase 1 CASP D Coal Feed Path and the Phase 2 CASP D Coal Feed Path.

(e) To document the compliance status with Condition D.20.1(b), the Permittee shall maintain records of the coal input to each of the facilities listed in Condition D.20.1(b).

(f) To document the compliance status with Condition D.20.1(c), the Permittee shall maintain records of the billet and billet fines input to each of the facilities listed in Condition D.20.1(c).

(g) To document the compliance status with Condition D.20.1(d) and (e), the Permittee shall maintain records of the Cokonyx input to each of the facilities listed in Condition D.20.1(d) and (e).

(h) Pursuant to 326 IAC 6.8-10-4(4) (Lake County Fugitive Particulate Matter Control Requirements):

(1) The source shall keep the following documentation to show compliance with each of its control measures and control practices:

(A) A map or diagram showing the location of all emission sources controlled, including the location, identification, length, and width of roadways.

(B) For each application of water or chemical solution to roadways, the following shall be recorded:

(i) The name and location of the roadway controlled

(ii) Application rate
(iii) Time of each application
(iv) Width of each application
(v) Identification of each method of application
(vi) Total quantity of water or chemical used for each application
(vii) For each application of chemical solution, the concentration and identity of the chemical
(viii) The material data safety sheets for each chemical

(C) For application of physical or chemical control agents not covered by clause (B), the following:

(i) The name of the agent
(ii) Location of application
(iii) Application rate
(iv) Total quantity of agent used
(v) If diluted, percent of concentration
(vi) The material data safety sheets for each chemical

(D) A log recording incidents when control measures were not used and a statement of explanation.

(E) Copies of all records required by this section shall be submitted to the department within twenty (20) working days of a written request by the department.

(b) Section C - General Record Keeping Requirements contains the Permittee's obligations with regard to the records required by this condition.

D.20.6 Reporting Requirements

(a) A quarterly report and a quarterly summary of the information to document the compliance status with Condition D.20.1 shall be submitted not later than thirty (30) days after the end of the quarter being reported.

(b) Pursuant to 326 IAC 6.8-10-4(4)(G) (Lake County Fugitive Particulate Matter Control Requirements), a quarterly report shall be submitted to the department stating the following:

(1) The dates any required control measures were not implemented

(2) A listing of those control measures

(3) The reasons that the control measures were not implemented

(4) Any corrective action taken

(c) These reports shall be submitted not later than thirty (30) calendar days following the end of each calendar quarter. Section C – General Reporting Requirements contains the Permittee's obligation with regard to the reporting required by this condition. The reports submitted by the Permittee do require a certification that meets the requirements of 326 IAC 2-7-6(1) by a “responsible official” as defined by 326 IAC 2-7-1(35).

Section D.21 **FACILITY OPERATION CONDITIONS**

Emission Unit Description: CASP Emergency Generators, Fire Pumps and Tanks Note: Complete Descriptions are shown in Section A.2 and Section A.3.

CASP A

(q) Two (2) diesel-fired emergency generators, identified as EGA1 and EGA2, approved for construction in 2010, each with a maximum rated output of 1650 kW.

(r) One (1) natural gas-fired emergency generator, identified as EGA3, approved for construction in 2010, with a maximum rated output of 450 kW.

CASP B

(q) Two (2) diesel-fired emergency generators, identified as EGB1 and EGB2, approved for construction in 2010, each with a maximum rated output of 1650 kW.

(r) One (1) natural gas-fired emergency generator, identified as EGB3, approved for construction in 2010, with a maximum rated output of 450 kW.

CASP C

(q) Two (2) diesel-fired emergency generators, identified as EGC1 and EGC2, approved for construction in 2010, each with a maximum rated output of 1650 kW.

(r) One (1) natural gas-fired emergency generator, identified as EGC3, approved for construction in 2010, with a maximum rated output of 450 kW.

CASP D

(q) Two (2) diesel-fired emergency generators, identified as EGD1 and EGD2, approved for construction in 2010, each with a maximum rated output of 1650 kW

(r) One (1) natural gas-fired emergency generator, identified as EGD3, approved for construction in 2010, with a maximum rated output of 450 kW.

(d) Specifically regulated insignificant activities (Carbon Alloy Synthesis Plants):

CASP Module A

(1) One (1) lubricating oil storage tank, identified as STO3 A, approved for construction in 2010, with a storage capacity of 1,000 gallons.

(2) One (1) diesel storage tank, identified as STO4 A, approved for construction in 2010, with a storage capacity of 1,000 gallons.

(3) Two (2) noncontact cooling tower systems, identified as PFRCT A1 and PFRCT A2, approved for construction in 2010, each rated at 20,000 gallons per minute.

(4) One (1) diesel-fired stationary fire pump, identified as FPA, approved for construction in 2010, with a maximum rated output of 315 Hp.

(5) One (1) coal tar storage tank, identified as STO1 A, approved for construction in 2010, with a storage capacity of 10,000 gallons.

CASP Module B

(1) One (1) lubricating oil storage tank, identified as STO3 B, approved for construction in 2010, with a storage capacity of 1,000 gallons.

(2) One (1) diesel storage tank, identified as STO4 B, approved for construction in 2010, with a storage capacity of 1,000 gallons.

(3) Two (2) noncontact cooling tower systems, identified as PFRCT B1 and PFRCT B2, approved for construction in 2010, each rated at 20,000 gallons per minute.

(4) One (1) diesel-fired stationary fire pump, identified as FPB, approved for construction in 2010, with a maximum rated output of 315 Hp.

(5) Two (2) coal tar storage tanks, identified as STO1 B and STO2 B, approved for construction in 2010, each with a storage capacity of 10,000 gallons.

CASP Module C

(1) One (1) lubricating oil storage tank, identified as STO3 C, approved for construction in 2010, with a storage capacity of 1,000 gallons.

(2) One (1) diesel storage tank, identified as STO4 C, approved for construction in 2010, with a storage capacity of 1,000 gallons.

(3) Two (2) noncontact cooling tower systems, identified as PFRCT C and PFRCT C2, approved for construction in 2010, each rated at 20,000 gallons per minute.

(4) One (1) diesel-fired stationary fire pump, identified as FPC, approved for construction in 2010, with a maximum rated output of 315 Hp.

(5) Two (2) coal tar storage tanks, identified as STO1 C and STO2 C, approved for construction in 2010, each with a storage capacity of 10,000 gallons.

CASP Module D

(1) One (1) lubricating oil storage tank, identified as STO3 D, approved for construction in 2010, with a storage capacity of 1,000 gallons.

(2) One (1) diesel storage tank, identified as STO4 D, approved for construction in 2010, with a storage capacity of 1,000 gallons.

(3) Two (2) noncontact cooling tower systems, identified as PFRCT D1 and PFRCT D2, approved for construction in 2010, each rated at 20,000 gallons per minute.

(4) One (1) diesel-fired stationary fire pump, identified as FPD, approved for construction in 2010, with a maximum rated output of 315 Hp.

(5) One (1) coal tar storage tank, identified as STO1 D, approved for construction in 2010, with a storage capacity of 10,000 gallons.

(The information describing the process contained in this facility description box is descriptive information and does not constitute enforceable conditions.)

Emission Limitations and Standards

D.21.1 Particulate Emission Limitation [326 IAC 6.8-1-2(a)]

Pursuant to 326 IAC 6.8-1-2(a), the Permittee shall not allow or permit discharge to the atmosphere any gases which contain particulate matter in excess of 0.03 grain per dry standard cubic foot (dscf) from each engine and cooling tower system listed in this section.

D.21.2 Volatile Organic Liquid Storage Vessels [326 IAC 8-9-1]

(a) Pursuant to 326 IAC 8-9-1 (a) and (b) (Volatile Organic Liquid Storage Vessels), on and after October 1, 1995, stationary vessels used to store volatile organic liquids (VOL), that are located in Lake County with a capacity of less than thirty nine thousand (39,000) gallons are subject to the reporting and record keeping requirements of this rule. The VOL storage vessels are exempted from all other provisions of this rule.

(b) Pursuant to 326 IAC 8-9-6 (a) and (b), the Permittee of each Volatile Organic Liquid Storage vessel to which 326 IAC 8-9-1 applies shall maintain the following records for the life of the vessel and submit a report to IDEM, OAQ containing the following for each vessel:

(1) The vessel identification number,

(2) The vessel dimensions, and

(3) The vessel capacity.

SECTION D.22 FACILITY OPERATION CONDITIONS

Emission Unit Description: East PCI Coal Pulverization

(a) One (1) coal pulverization equipment train, identified as SS-1 hat consists of a pulverizer with a maximum capacity of 90 tons per hour; a preheater with a maximum heat input capacity of 37.3 MMBtu per hour, and dual process separation cyclone, constructed in 1993, and exhausting to one baghouse with three modules (three stacks) 1A, 1B and 1C.

(b) One (1) coal pulverization equipment train, identified as SS-2 that consists of a pulverizer with a maximum capacity of 90 tons per hour; a preheater with a maximum heat input capacity of 37.3 MMBtu per hour, and dual process separation cyclone, constructed in 1993, and exhausting to one baghouse with three modules (three stacks) 2A, 2B and 2C.

(c) One (1) coal pulverization equipment train, identified as SS-3 that consists of a pulverizer with a maximum capacity of 90 tons per hour; a preheater with a maximum heat input capacity of 37.3 MMBtu per hour, and dual process separation cyclone, constructed in 1993, and exhausting to one baghouse with three modules (three stacks) 3A, 3B and 3C.

(The information describing the process contained in this facility description box is descriptive information and does not constitute enforceable conditions.)

Emission Limitations and Standards [326 IAC 2-7-5(1)]

D.22.1 PSD Minor Limit (NO_X) [326 IAC 2-2]

Pursuant to CP (45) 1895 issued October 26, 1990, the NO_X emissions from the pulverized coal preheaters and railcar heater (Section D.24) shall be limited to 37 tons per 12 consecutive month period. Pursuant to CP(45) 1895, the natural gas usage in the three (3) preheaters shall be limited to less than 549 million cubic feet per 12 consecutive month period with compliance demonstrated at the end of each month. The natural gas usage in the three (3) preheaters shall be limited to less than 183 million cubic feet per month. Compliance with this limit restricts the potential to emit for NO_X to less than 37 tons per year for the three (3) preheaters and makes the provisions of 326 IAC 2-2 Prevention of Significant Deterioration (PSD), not applicable.

D.22.2 PM and PM_{10} Minor Limits [326 IAC 2-2][326 IAC 2-1.1-5]

(a) The particulate matter (PM) from SS-1 stacks 1A, 1B and 1C; SS-2 stacks 2A, 2B and 2C; and SS-3 stacks 3A, 3B and 3C shall each not exceed 0.36 pounds per hour.

(b) The particulate matter less than 10 microns (PM_{10}) from SS-1 stacks 1A, 1B and 1C; SS-2 stacks 2A, 2B and 2C; and SS-3 stacks 3A, 3B and 3C shall each not exceed 0.21 pounds per hour.

(c) Compliance with the limitations in conditions D.22.2(a), D.23.1(a) and D.25.1(a) combined limits PM to less than 25 tons per year and makes 326 IAC 2-2 and 326 IAC 2-1.1-5 not applicable.

(d) Compliance with the limitations in conditions D.22.2(b), D.23.1(b) and D.25.1(b) combined limits PM_{10} to less than 15 tons per year and makes 326 IAC 2-2 and 326 IAC 2-1.1-5 not applicable.

D.22.3 Particulate Limitations [326 IAC 6.8-1-2(a)]

Pursuant to 326 IAC 6.8-1-2(a) (Particulate Matter Limitations for Lake County), the particulate matter from the coal pulverization equipment trains 1, 2 and 3 shall not exceed three-hundredths (0.03) grain per dry standard cubic foot (dscf).

Compliance Determination Requirements

D.22.4 Testing Requirements

Within 5 years after the most recent valid compliance demonstration, the Permittee shall perform PM/PM_{10} testing on the three pulverization equipment train SS-1 baghouse stacks 1A, 1B and 1C, the three pulverization equipment train SS-2 baghouse stacks 2A, 2B and 2C, or the three pulverization equipment train SS-3, baghouse stacks 3A, 3B and 3C for the purpose of determining compliance with Conditions D.22.2 and D.22.3, utilizing methods approved by the Commissioner..

The second 5 year test cyle shall be performed on the three pulverization equipment train baghouse SS-1 stacks 1A, 1B and 1C, the three pulverization equipment train SS-2 baghouse stacks 2A, 2B and 2C or the three pulverization equipment train SS-3 baghouse stacks 3A, 3B and 3C not previously tested.

The third 5 year test cycle shall be performed on the three pulverization equipment train baghouse SS-1 stacks 1A, 1B and 1C, the three pulverization equipment train SS-2 baghouse stacks 2A, 2B and 2C or the three pulverization equipment train SS-3 baghouse stacks 3A, 3B and 3C not previously tested.

The testing cycle for these units shall be repeated at least once every 5 years from the date of the most recent valid compliance demonstration. Testing shall be conducted in accordance with the provisions of 326 IAC 3-6 (Source Sampling Procedures). Section C - Performance Testing contains the Permittee's obligation with regard to the performance testing required by this condition.

D.22.5 Particulate Matter Control [326 IAC 2-7-6(6)]

(a) The baghouses for particulate control shall be in operation and control particulate emissions at all times the three (3) pulverization equipment trains are in operation.

(b) In the event that bag failure is observed in a multi-compartment baghouse, if operations will continue for ten (10) days or more after the failure is observed before the failed units will be repaired or replaced, the Permittee shall promptly notify the IDEM, OAQ of the expected date the failed units will be repaired or replaced. The notification shall also include the status of the applicable compliance monitoring parameters with respect to normal, and the results of any response actions taken up to the time of notification.

Compliance Monitoring Requirements [326 IAC 2-7-6(1)] [326 IAC 2-7-5(1)]

D.22.6 Visible Emissions Notations

(a) Visible emission notations of the pulverization equipment train SS-1 baghouse stacks 1A, 1B and 1C; pulverization equipment train SS-2 baghouse stacks 2A, 2B and 2C; and pulverization equipment train SS-3, baghouse stacks 3A, 3B and 3C shall be performed once per day during normal daylight operations when exhausting to the atmosphere. A trained employee shall record whether emissions are normal or abnormal.

(b) For processes operated continuously, "normal" means those conditions prevailing, or expected to prevail, eighty percent (80%) of the time the process is in operation, not counting startup or shut down time.

(c) In the case of batch or discontinuous operations, readings shall be taken during that part of the operation that would normally be expected to cause the greatest emissions.

(d) A trained employee is an employee who has worked at the plant at least one (1) month and has been trained in the appearance and characteristics of normal visible emissions for that specific process.

(e) If abnormal emissions are observed, the Permittee shall take a reasonable response. Section C - Response to Excursions or Exceedances contains the Permittee's obligation with regard to the reasonable response steps required by this condition. Failure to take response steps shall be considered a deviation from this permit.

D.22.7 Parametric Monitoring

The Permittee shall record the pressure drop across the baghouses used in conjunction with each pulverization equipment train, at least once per day when each pulverization equipment train is in operation. When for any one reading, the pressure drop across the baghouse is outside the normal range, the Permittee shall take a reasonable response. The normal range for this unit is a pressure drop between 1.0 and 8.0 inches of water unless a different upper-bound or lower-bound value for this range is determined during the latest stack test
Section C - Response to Excursions or Exceedances contains the Permittee's obligation with regard to the reasonable response steps required by this condition. A pressure reading that is outside the above mentioned range is not a deviation from this permit. Failure to take response steps shall be considered a deviation of this permit.

The instrument used for determining the pressure shall comply with Section C - Instrument Specifications, of this permit, shall be subject to approval by IDEM, OAQ shall be calibrated or replaced at least once every six (6) months or other time period specified by the manufacturer. The Permittee shall maintain records of the manufacturer specifications, if used.

Record Keeping and Reporting Requirements [326 IAC 2-7-5(3)] [326 IAC 2-7-19]

D.22.8 Record Keeping Requirements

(a) To document the compliance status with Condition D.22.1, the Permittee shall maintain records of the monthly natural gas usage in the three (3) air preheaters.

(b) To document the compliance status with Conditions D.22.6, the Permittee shall maintain records of once per day visible emission notations of the three (3) pulverization equipment train baghouse stacks exhaust. The Permittee shall include in its daily record when a visible emission notation is not taken and the reason for the lack of visible emission notation (e.g. the process did not operate that day).

(c) To document the compliance status with Condition D.22.7, the Permittee shall maintain records once per day of the pressure drop during normal operation. The Permittee shall include in its daily record when a pressure drop reading is not taken and the reason for the lack of pressure drop reading (e.g. the process did not operate that day).

(d) To document the compliance status with Condition D.22.4, the Permittee shall maintain records of the stacks tested during each 2.5 year test cycle.

(e) Section C - General Record Keeping Requirements contains the Permittee's obligations with regard to the records required by this condition.

D.22.9 Reporting Requirements

A quarterly summary of the information to document the compliance status with conditions D.22.1 shall be submitted not later than thirty (30) days after the end of the quarter being reported. Section C - General Reporting contains the Permittee's obligation with regard to the reporting required by this condition. The report submitted by the Permittee does require a certification that meets the requirements of 326 IAC 2-7-6(1) by a responsible official as defined by 326 IAC 2-7-1 (35).

SECTION D.23 Facility Operation Conditions

Emissions Unit Description: West PCI Coal Pulverization

(a) One (1) Pulverized Coal Transport, identified as Line A, constructed in 1993, with a maximum capacity of 210 tons per hour, ducted to a baghouse (A) exhausting to stack (SS-5).

(b) One (1) Pulverized Coal Transport, identified as Line B, constructed in 1993, with a maximum capacity of 210 tons per hour, ducted to a baghouse (B) exhausting to stack (SS-6).

(c) One (1) Pulverized Coal storage reservoir, constructed in 1993, with a maximum capacity of 600 tons, blanketed with nitrogen and ducted to a baghouse (vent filter house) exhausting to stack (SS-7).

(The information describing the process contained in this facility description box is descriptive information and does not constitute enforceable conditions.)

Emission Limitations and Standards [326 IAC 2-7-5(1)]

D.23.1 PM and PM_{10} Minor Limits [326 IAC 2-2][326 IAC 2-1.1-5]

(a) The particulate matter (PM) from stacks SS-5, SS-6 and SS-7 shall each not exceed 0.09 pound per hour.

(b) The particulate matter less than 10 microns (PM_{10}) from stacks SS-5, SS-6 and SS-7 shall each not exceed 0.06 pound per hour.

(c) Compliance with the limitations in conditions D.22.1(a), D.23.1(a) and D.25.1(a) combined limits PM to less than 25 tons per year and makes 326 IAC 2-2 and 326 IAC 2-1.1-5 not applicable.

(d) Compliance with the limitations in conditions D.22.2(b), D.23.1(b) and D.25.1(b) combined limits PM_{10} to less than 15 tons per year and makes 326 IAC 2-2 and 326 IAC 2-1.1-5 not applicable.

D.23.2 Particulate Limitations [326 IAC 6.8-1-2(a)]

Pursuant to 326 IAC 6.8-1-2(a) (Particulate Matter Limitations for Lake County), the particulate matter from the stacks SS-5, SS-6 and SS-7 shall not exceed three-hundredths (0.03) grain per dry standard cubic foot (dscf).

Compliance Determination Requirements

D.23.3 Testing Requirements

Within 5 years after the most recent valid compliance demonstration, the Permittee shall perform PM/ PM_{10} stack tests on one of the pulverized coal transport stacks SS-5 and SS-6 for the purpose of determining compliance with Conditions D.23.1 and D.23.2, utilizing a testing method approved by the commissioner. PM_{10} includes filterable and condensable PM.

The second 5 year test cycle shall be performed on the pulverized coal transport stacks SS-5 or SS-6 not previously tested and the pulverized coal storage reservoir stack SS-7.

The testing cycle for these units shall be repeated at least once every 5 years from the date of the most recent valid compliance demonstration. Testing shall be conducted in accordance with the provisions of 326 IAC 3-6 (Source Sampling Procedures). Section C - Performance Testing contains the Permittee's obligation with regard to the performance testing required by this condition.

D.23.4 Particulate Control

The baghouses and vent filter house for the for particulate control shall be in operation and control particulate emissions at all times when the pulverized coal transport lines and coal storage reservoir are in operation.

Record Keeping and Reporting Requirements [326 IAC 2-7-5(3)] [326 IAC 2-7-19]

D.23.5 Record Keeping Requirements

(a) To document the compliance status with Condition D.23.3, the Permittee shall maintain records of the stacks tested during each five year testing cycle.

(b) Section C - General Record Keeping Requirements contains the Permittee's obligations with regard to the records required by this condition.

SECTION D.24 FACILITY OPERATION CONDITIONS

Emissions Unit Description: PCI Coal Handling Thaw Shed

One (1) non-vented railcar heater system, constructed in 1993, with a maximum capacity of 14 MMBtu per hour.

(The information describing the process contained in this facility description box is descriptive information and does not constitute enforceable conditions.)

Emission Limitations and Standards [326 IAC 2-7-5(1)]

D.24.1 PSD Minor Limit (NO_X) [326 IAC 2-2]

Pursuant to CP (45) 1895 issued October 26, 1990, the NO_X emissions from the railcar heater and pulverized coal preheaters (Section D.22) shall be limited to 37 tons per 12 consecutive month period. Pursuant to CP(45) 1895, the natural gas usage in the railcar heater shall be limited to less than 12.504 million cubic feet per 12 consecutive month period with compliance demonstrated at the end of each month. The natural gas usage in the railcar heater shall be limited to less than 5 million cubic feet per month. Compliance with this limit restricts the potential to emit for NO_X to less than 37 tons per year for the railcar heater and makes the provisions of 326 IAC 2-2 Prevention of Significant Deterioration (PSD), not applicable.

D.24.2 Fugitive Dust Emission Limitations [326 IAC 6-4-2][326 IAC 6.8-10-3]

(a) Pursuant to 326 IAC 6-4-2:

(1) The railcar heater generating fugitive dust shall be in violation of this rule (326 IAC 6-4) if any of the following criteria are violated:

(A) A source or combination of sources which cause to exist fugitive dust concentrations greater than sixty-seven percent (67%) in excess of ambient upwind concentrations as determined by the following formula:

$$P = \frac{100\,(R - U)}{U}$$

Where
P = Percentage increase
R = Number of particles of fugitive dust measured at downward receptor site
U = Number of particles of fugitive dust measured at upwind or background site

(B) The fugitive dust is comprised of fifty percent (50%) or more respirable dust, then the percent increase of dust concentration in subdivision (1) of this section shall be modified as follows:

$$PR = (1.5 \pm N)\,P$$

Where
N = Fraction of fugitive dust that is respirable dust;
PR = allowable percentage increase in dust concentration above background; and
P = no value greater than sixty-seven percent (67%).

(C) The ground level ambient air concentrations exceed fifty (50) micrograms per cubic meter above background concentrations for a sixty (60) minute period.

(D) If fugitive dust is visible crossing the boundary or property line of a source. This subdivision may be refuted by factual data expressed in subdivisions (1), (2) or (3) of this section. 326 IAC 6-4-2(4) is not federally enforceable.

(2) Pursuant to 326 IAC 6-4-6(6) (Exceptions), fugitive dust from a source caused by adverse meteorological conditions will be considered an exception to this rule (326 IAC 6-4) and therefore not in violation.

(b) Pursuant to 326 IAC 6.8-10-3 Lake County Fugitive Particulate Matter Emissions Limitations, fugitive emissions from the railcar heater generating fugitive dust shall comply with the emissions limitations in Section C - Fugitive Dust Emissions.

Record Keeping and Reporting Requirements [326 IAC 2-7-5(3)] [326 IAC 2-7-19]

D.24.3 Record Keeping Requirements

(a) To document the compliance status with Condition D.24.1, the Permittee shall maintain records of the monthly natural gas usage in the rail car heaters.

(b) Section C - General Record Keeping Requirements contains the Permittee's obligations with regard to the records required by this condition.

D.24.4 Reporting Requirements

A quarterly summary of the information to document the compliance status with condition D.24.1 shall be not later than thirty (30) days after the end of the quarter being reported. Section C - General Reporting contains the Permittee’s obligation with regard to the reporting required by this condition. The report submitted by the Permittee does require a certification that meets the requirements of 326 IAC 2-7-6(1) by a responsible official as defined by 326 IAC 2-7-1(35).

SECTION D.25 FACILITY OPERATION CONDITIONS

Emissions Unit Description: PCI Coal Handling Operations

(a) One (1) Railcar Dumper, identified as RCD-1, constructed in 1993, with a maximum capacity of 600 tons per hour, ducted to a baghouse 8AB exhausting through one or two fans to stacks 8A and/or 8B.

(b) One (1) Reclaim Hopper, identified as RCH-1, constructed in 1993, with a maximum capacity of 300 tons per hour, ducted to baghouse DC-6 and exhausting to stack DC-6.

(c) One (1) Car Dump Hopper 1/C1, identified as FS-8, constructed in 1993, with a maximum capacity of 200 tons per hour, ducted to baghouse DC-1 exhausting to stack F1.

(d) One (1) Car dump Hopper 2/C1, identified as FS-9, constructed in 1993, with a maximum capacity of 200 tons per hour, ducted to a baghouse DC-2 exhausting to stack F2.

(e) One (1) Car Dump Hopper 3/C1, identified as FS-10, constructed in 1993, with a maximum capacity of 200 tons per hour, ducted to a baghouse DC-3 exhausting to stack F3.

(f) One (1) Transfer Point C1/C2, identified as FS-2, constructed in 1993, with a maximum capacity of 600 tons per hour, ducted to a baghouse (DC-4) exhausting to stack (F4).

(g) One (1) Reclaim Hopper/C2, identified as FS-14, constructed in 1993, with a maximum capacity of 300 tons per hour, ducted to a baghouse DC-5 exhausting to stack F5.

(h) One (1) Screen Transfer/C2, identified as FS-3, constructed in 1993, with a maximum capacity of 600 tons per hour, ducted to a baghouse DC-7 exhausting to stack F7.

(i) One (1) Screen/C3 Gate Transfer identified as FS-11, constructed in 1993, ducted to a baghouse DC-8 exhausting to stack F8.

(j) One (1) Screen/C4 Gate Transfer, identified as FS-12, constructed in 1993, with a maximum capacity of 600 tons per hour, ducted to a baghouse DC-9 exhausting to stack F9.

(k) One (1) Transfer Point C4/C5, identified as FS-4, constructed in 1993, ducted to a baghouse DC-10 exhausting to stack F10.

East Building- Coal Handling

(a) One (1) Transfer Point C5/C6, identified as FS-5, constructed in 1993, with a maximum capacity of 600 tons per hour, ducted to a baghouse DC-11 exhausting to stack F11.

(b) One (1) Transfer Point C6/Bin 1, identified as FS-7, constructed in 1993, ducted to baghouse DC-12 exhausting to stack F12.

(c) One (1) Transfer Point C5/Bin 2, identified as FS-6, constructed in 1993, ducted to baghouse DC-13 exhausting to stack F13.

(d) One (1) Transfer Point C6/Bin 3, identified as FS-13, constructed in 1993, with a maximum capacity of 600 tons per hour, ducted to baghouse DC-14 exhausting to stack F14.

Coal Piles and Haul Roads

(a) One coal pile operation, identified as F17, constructed in 1993, with a storage capacity of 100,000 tons and an area of 2 acres.

(b) Haul – Roads – Vehicle Traffic

(The information describing the process contained in this facility description box is descriptive information and does not constitute enforceable conditions.)

Emission Limitations and Standards [326 IAC 2-7-5(1)]

D.25.1 PM and PM_{10} Minor Limits [326 IAC 2-2][326 IAC 2-1.1-5]

The Permittee shall comply with the following particulate matter (PM) and particulate matter less than 10 microns (PM_{10}) emission limits:

(a) The PM emissions from stacks 8A, 8B, shall each not exceed 0.36 pound per hour.

(b) The PM emissions from stacks DC-6, F1 through F5 and F7 through F14 and Coal Pile identified as F17 shall each not exceed 0.09 pound per hour.

(c) The PM_{10} emissions from stacks 8A, 8B, shall each not exceed 0.21 pound per hour

(d) The PM_{10} emissions from stacks DC-6, F1 through F5 and F7 through F14 and Coal Pile identified as F17 shall each not exceed 0.06 pound per hour.

(e) Compliance with the limitations in conditions D.22.2(a), D.23.1(a) and D.25.1(a) combined limits PM to less than 25 tons per year and makes 326 IAC 2-2 and 326 IAC 2-1.1-5 not applicable.

(f) Compliance with the limitations in conditions D.22.2(b), D.23(b) and D.25.1(b) combined limits PM_{10} to less than 15 tons per year and makes 326 IAC 2-2 and 326 IAC 2-1.1-5 not applicable.

D.25.2 Particulate Limitations [326 IAC 6.8-1-2(a)]

Pursuant to 326 IAC 6.8-1-2(a) (Particulate Matter Limitations for Lake County), the particulate matter from the railcar dumpers, hoppers, screens, transfer points and east building transfer points and bins stacks 8A, 8B, DC-6, F1 through F5, F7 through F14 shall not exceed three-hundreds (0.03) grain per dry standard cubic foot (dscf).

Compliance Determination Requirements

D.25.3 Testing Requirements

Within 5 years after the most recent valid compliance demonstration, the Permittee shall perform PM/ PM_{10} stack tests on Railcar Dumper Stacks 8A and 8B and one of each of the following for the purpose of determining compliance with Conditions D25.1 and D.25.2, utilizing methods approved by the Commissioner:

(a) Reclaim Hopper RCH-1 baghouse Stack DC-6 or Reclaim Hopper/C2 stack F5;

(b) Car Dump Hopper 1/C1 stack F1, Car Dump Hopper 2/C2 stack F2 or Car Dump Hopper 3/C3 stack F3;

(c) Transfer Point C1/C2 Stack F4, Transfer Point C4/C5 stack F10 or Transfer Point C5/C6 stack F11;

(d) Screen Transfer/C2 stack F7, Screen Transfer/C3 gate Transfer stack F8 or Screen Transfer/C4 Gate Transfer stack F9; and

(e) Transfer Point C6/Bin 1, stack F12, Transfer Point C5/Bin 2, stack F13 or Transfer Point C6/Bin 3 stack F14

The second 5 year test cycle for PM/ PM_{10} shall be performed on the Railcar Dumper Stacks 8A and 8B and one of each of the following not tested previously:

(a) Reclaim Hopper RCH-1 baghouse Stack DC-6 or Reclaim Hopper/C2 stack F5;

(b) Car Dump Hopper 1/C1 stack F1, Car Dump Hopper 2/C2 stack F2 or Car Dump Hopper 3/C3 stack F3;

(c) Transfer Point C1/C2 Stack F4, Transfer Point C4/C5 stack F10 or Transfer Point C5/C6 stack F11;

(d) Screen Transfer/C2 stack F7, Screen Transfer/C3 gate Transfer stack F8 or Screen Transfer/C4 Gate Transfer stack F9; and

(e) Transfer Point C6/Bin 1, stack F12, Transfer Point C5/Bin 2, stack F13 or Transfer Point C6/Bin 3 stack F14

The third 5 year test cycle for PM/ PM_{10} shall be performed on the Railcar Dumper Stacks 8A and 8B, Reclaim Hopper RCH-1 baghouse Stack DC-6 or Reclaim Hopper/C2 stack F5 and one of each of the following not tested previously in test cycle one or two:

(a) Car Dump Hopper 1/C1 stack F1, Car Dump Hopper 2/C2 stack F2 or Car Dump Hopper 3/C3 stack F3;

(b) Transfer Point C1/C2 Stack F4, Transfer Point C4/C5 stack F10 or Transfer Point C5/C6 stack F11;

(c) Screen Transfer/C2 stack F7, Screen Transfer/C3 gate Transfer stack F8 or Screen Transfer/C4 Gate Transfer stack F9; and

(d) Transfer Point C6/Bin 1, stack F12, Transfer Point C5/Bin 2, stack F13 or Transfer Point C6/Bin 3 stack F14

The test cycle for these units shall be repeated at least once every 5 years from the date of the most recent valid compliance demonstration. Testing shall be conducted in accordance with the provisions of 326 IAC 3-6 (Source Sampling Procedures). Section C - Performance Testing contains the Permittee's obligation with regard to the performance testing required by this condition. PM_{10} includes filterable and condensable PM.

D.25.4 Particulate Control

The baghouses for particulate control shall be in operation and control particulate emissions at all times the railcar dumpers, hoppers screens, and transfer points are in operation.

D.25.5 Fugitive Dust Control

A dust suppressant shall be applied to the coal piles and roads as necessary during the handling and transporting of coal.

Record Keeping and Reporting Requirements [326 IAC 2-7-5(3)] [326 IAC 2-7-19]

D.25.6 Record Keeping Requirements

(a) To document the compliance status with Condition D.25.3, the Permittee shall maintain records of the stacks tested during each five year testing cycle.

(b) Section C - General Record Keeping Requirements contains the Permittee's obligations with regard to the records required by this condition.

SECTION D.26 FACILITY OPERATION CONDITIONS

Emissions Unit Description: Specifically Regulated insignificant activities include the following facilities, emission units, fugitive sources, control equipment, process equipment and operational practices:

(a) Degreasing operations that do not exceed 145 gallons per 12 months, except if subject to 326 IAC 20-6.

(b) Cleaners and solvents characterized as follows:

(1) Having a vapor pressure equal to or less than 2 kPa; 15 mm Hg; or 0.3 psi measured at 38°C (100°F) or;
(2) Having a vapor pressure equal to or less than 0.7 kPa; 5mm Hg; or 0.1 psi measured at 20°C (68°F); the use of which for all cleaners and solvents combined does not exceed 145 gallons per 12 months.

(c) One (1) 5,000 gallon #2 diesel fuel tank - A petroleum fuel, other than gasoline, dispensing facility having a storage capacity less than or equal to 10,500 gallons, and dispensing less than or equal to 230,000 gallons per month.

(The information describing the process contained in this facility description box is descriptive information and does not constitute enforceable conditions.)

Emission Limitations and Standards [326 IAC 2-7-5(1)]

D.26.1 Volatile Organic Compounds (VOC) [326 8-3-5]

(a) Pursuant to 326 IAC 8-3-5(a) (Cold Cleaner Degreaser Operation and Control),for cold cleaner degreaser operations without remote solvent reservoirs existing as of July 1, 1990, located in Clark, Elkhart, Floyd, Lake, Marion, Porter or St. Joseph Counties, the Permittee shall ensure that the following requirements are met:

(1) Equip the degreaser with a cover. The cover must be designed so that it can be easily operated with one (1) hand if:

(A) The solvent volatility is greater than two (2) kiloPascals (fifteen (15) millimeters of mercury or three-tenths (0.3) pounds per square inch) measured at thirty-eight degrees Celsius (38°C) (one hundred degrees Fahrenheit (100°F));

(B) The solvent is agitated; or

(C) The solvent is heated.

(2) Equip the degreaser with a facility for draining cleaned articles. If the solvent volatility is greater than four and three-tenths (4.3) kiloPascals (thirty-two (32) millimeters of mercury or six-tenths (0.6) pounds per square inch) measured at thirty-eight degrees Celsius (38°C) (one hundred degrees Fahrenheit (100°F)), then the drainage facility must be internal such that articles are enclosed under the cover while draining. The drainage facility may be external for applications where an internal type cannot fit into the cleaning system.

(3) Provide a permanent, conspicuous label which lists the operating requirements outlined in subsection (b).

(4) The solvent spray, if used, must be a solid, fluid stream and shall be applied at a pressure which does not cause excessive splashing.

(5) Equip the degreaser with one (1) of the following control devices if the solvent volatility is greater than four and three-tenths (4.3) kiloPascals (thirty-two (32) millimeters of mercury or six-tenths (0.6) pounds per square inch) measured at thirty-eight degrees Celsius (38°C) (one hundred degrees Fahrenheit (100°F)), or if the solvent is heated to a temperature greater than forty-eight and nine-tenths degrees Celsius (48.9°C) (one hundred twenty degrees Fahrenheit (120°F)):

(A) A freeboard that attains a freeboard ratio of seventy-five hundredths (0.75) or greater.

(B) A water cover when solvent is used is insoluble in, and heavier than, water.

(C) Other systems of demonstrated equivalent control such as a refrigerated chiller of carbon adsorption. Such systems shall be submitted to the U.S. EPA as a SIP revision.

(b) Pursuant to 326 IAC 8-3-5(b) (Cold Cleaner Degreaser Operation and Control), the owner or operator of a cold cleaning facility construction of which commenced after July 1, 1990, shall ensure that the following operating requirements are met:

(1) Close the cover whenever articles are not being handled in the degreaser.

(2) Drain cleaned articles for at least fifteen (15) seconds or until dripping ceases.

(3) Store waste solvent only in covered containers and prohibit the disposal or transfer of waste solvent in any manner in which greater than twenty percent (20%) of the waste solvent by weight could evaporate.

D.26.2 Volatile Organic Compounds (VOC) [326 IAC 8-3-8] (Material require¬ments for cold cleaning degreasers)

Pursuant to 326 IAC 8-3-8 (Material requirements for cold cleaning degreasers), the users, providers, and manufacturers of solvents for use in cold cleaning degreasers in Clark, Floyd, Lake, and Porter Counties, except for solvents intended to be used to clean electronic components shall do the following:

(a) On and after November 1, 1999, no person shall Operate a cold cleaning degreaser with a solvent vapor pressure that exceeds two (2) millimeters of mercury (thirty-eight thousandths (0.038) pound per square inch) measured at twenty (20) degrees Celsius (sixty-eight (68) degrees Fahrenheit).

(b) On and after May 1, 2001, no person shall Operate a cold cleaning degreaser with a solvent vapor pressure that exceeds one (1) millimeter of mercury (nineteen-thousandths (0.019) pound per square inch) measured at twenty (20) degrees Celsius (sixty-eight (68) degrees Fahrenheit).

(c) On and after November 1, 1999, all persons subject to the requirements of 326 IAC 8-3-8 (c)(1)(B) and (c)(2)(B) shall maintain each of the following records for each purchase:

(1) The name and address of the solvent supplier.

(2) The date of purchase.

(3) The type of solvent.

(4) The volume of each unit of solvent.

(5) The total volume of the solvent.

(6) The true vapor pressure of the solvent measured in millimeters of mercury at twenty (20) degrees Celsius (sixty-eight (68) degrees Fahrenheit).

(d) All records required by 326 IAC 8-3-8 (d) shall be retained on-site for the most recent three (3) year period and shall be reasonably accessible for an additional two (2) year period.

D.26.3 Volatile Organic Liquid Storage Vessels [326 IAC 8-9-1]

(a) Pursuant to 326 IAC 8-9-1(a) and (b) (Volatile Organic Liquid Storage Vessels), on and after October 1, 1995, stationary vessels used to store volatile organic liquids (VOL), that are located in Clark, Floyd, Lake or Porter County with a capacity of less than thirty nine thousand (39,000) gallons are subject to the reporting and record keeping requirements of this rule. The VOL storage vessels are exempted from all other provisions of this rule.

(b) Pursuant to 326 IAC 8-9-6(a) and (b), the Permittee shall maintain the following records for the life of the stationary storage vessels and submit a report to IDEM, OAQ containing the following for each vessel:

(1) The vessel identification number,

(2) The vessel dimensions, and

(3) The vessel capacity.

SECTION D.27 FACILITY OPERATION CONDITIONS

Emissions Unit Description:

Corrective Action Management Unit (CAMU)

(a) One (1) CAMU Evaporative Spray System, with a maximum throughput capacity of 250 gallons per minute (gpm), consisting of 16 spray heads, each with a rated capacity of 14.4 gpm, located on the floor of CAMU Unit 2. The system is fed from a single pump drawing water from the CAMU Unit 1 leachate collection system, which contains non-native materials dredged from the Calumet River.

(The information describing the process contained in this facility description box is descriptive information and does not constitute enforceable conditions.)

Emission Limitations and Standards [326 IAC 2-7-5(1)]

D.27.1 Particulate Emissions Limitations [326 IAC 6.8-1-2(a)]

Pursuant to 326 IAC 6.8-1-2(a), the Permittee shall not allow or permit discharge to the atmosphere any gases which contain particulate matter in excess of 0.03 grain per dry standard cubic foot (dscf) from the CAMU Evaporative Spray System.

SECTION E.1 Nitrogen Oxides Budget Trading Program - NOX Budget Permit for NOX Budget Units Under 326 IAC 10-4-1(a)

ORIS Code: 50733

NO_X Budget Source [326 IAC 2-7-5(14)]

One (1) Boiler House No. 4, emissions group 720, comprised of the following:

(a) Two (2) Boilers, 720 No. 1 and No. 2, identified as O4B10459 and O4B20460, constructed in 1967, equipped to combust natural gas, blast furnace gas and fuel oil, with a heat input of 500 MMBtu per hour each, exhausting through Stacks O46268 and O46269, respectively.

(b) One (1) Boiler, 720 No. 3, identified as O4B30461, constructed in 1967, equipped to combust blast furnace gas and natural gas, with a heat input of 500 MMBtu per hour, exhausting through Stack O46270.

One (1) Turbo Blower Boiler House (TBBH), emissions group 701, comprised of the following:

(a) Three (3) Boilers, 701 No. 1, No. 2, and No. 3, identified as OTB10462, OTB20463 and OTB30464, constructed in 1948, equipped to combust blast furnace gas, coke oven gas, fuel oil and natural gas, with a heat input of 410 MMBtu per hour each, exhausting through Stacks OT6271, OT6272 and OT6273, respectively.

(b) One (1) Boiler 701 No. 5, identified as OTB50466, constructed in 1958, equipped to combust blast furnace gas, coke oven gas, fuel oil and natural gas, with a heat input of 410 MMBtu per hour, exhausting through Stack OT6275.

(c) One (1) boiler 701 No. 6, identified as OTB60467, constructed prior to August 17, 1971, equipped to combust blast furnace gas and natural gas, with a heat input capacity of 710 MMBtu per hour, exhausting through Stack OT6276.

(The information describing the process contained in this facility description box is descriptive information and does not constitute enforceable conditions.)

E.1.1 Automatic Incorporation of Definitions [326 IAC 10-4-7(e)]

This NO_X budget permit is deemed to incorporate automatically the definitions of terms under 326 IAC 10-4-2.

E.1.2 Standard Permit Requirements [326 IAC 10-4-4(a)]

(a) The owners and operators of the NO_X budget source and each NO_X budget unit shall operate each unit in compliance with this NO_X budget permit.

(b) The NO_X budget units subject to this NO_X budget permit are the following:

(1) At Boiler House No. 4, 720 No. 1, 720 No. 2, and 720 No. 3; and

(2) At Turbo Blower Boiler House, 701 No. 1, 701 No. 2, 701 No. 3, 701 No. 5, and 701 No. 6.

E.1.3 Monitoring Requirements [326 IAC 10-4-4(b)]

(a) The owners and operators and, to the extent applicable, the NO_X authorized account representative of the NO_X budget source and each NO_X budget unit at the source shall comply with the monitoring requirements of 40 CFR 75 and 326 IAC 10-4-12.

(b) The emissions measurements recorded and reported in accordance with 40 CFR 75 and 326 IAC 10-4-12 shall be used to determine compliance by each unit with the NO_X budget emissions limitation under 326 IAC 10-4-4(c) and Condition F.4, Nitrogen Oxides Requirements.

E.1.4 Nitrogen Oxides Requirements [326 IAC 10-4-4(c)]

(a) The owners and operators of the NO_X budget source and each NO_X budget unit at the source shall hold NO_X allowances available for compliance deductions under 326 IAC 10-4-10(j), as of the NO_X allowance transfer deadline, in each unit's compliance account and the source's overdraft account in an amount:

(1) Not less than the total NO_X emissions for the ozone control period from the unit, as determined in accordance with 40 CFR 75 and 326 IAC 10-4-12;

(2) To account for excess emissions for a prior ozone control period under 326 IAC 10-4-10(k)(5); or

(3) To account for withdrawal from the NO_X budget trading program, or a change in regulatory status of a NO_X budget opt in unit.

(b) Each ton of NO_X emitted in excess of the NO_X budget emissions limitation shall constitute a separate violation of the Clean Air Act (CAA) and 326 IAC 10-4.

(c) Each NO_X budget unit shall be subject to the requirements under (a) above and 326 IAC 10-4-4(c)(1) starting on May 31, 2004.

(d) NO_X allowances shall be held in, deducted from, or transferred among NO_X allowance tracking system accounts in accordance with 326 IAC 10 4 9 through 11, 326 IAC 10-4-13, and 326 IAC 10-4-14.

(e) A NO_X allowance shall not be deducted, in order to comply with the requirements under (a) above and 326 IAC 10-4-4(c)(1), for an ozone control period in a year prior to the year for which the NO_X allowance was allocated.

(f) A NO_X allowance allocated under the NO_X budget trading program is a limited authorization to emit one (1) ton of NO_X in accordance with the NO_X budget trading program. No provision of the NO_X budget trading program, the NO_X budget permit application, the NO_X budget permit, or an exemption under 326 IAC 10-4-3 and no provision of law shall be construed to limit the authority of the U.S. EPA or IDEM, OAQ to terminate or limit the authorization.

(g) A NO_X allowance allocated under the NO_X budget trading program does not constitute a property right.

(h) Upon recordation by the U.S. EPA under 326 IAC 10-4-10, 326 IAC 10-4-11, or 326 IAC 10-4-13, every allocation, transfer, or deduction of a NO_X allowance to or from each NO_X budget unit's compliance account or the overdraft account of the source where the unit is located is deemed to amend automatically, and become a part of, this NO_X budget permit of the NO_X budget unit by operation of law without any further review.

E.1.5 Excess Emissions Requirements [326 IAC 10-4-4(d)]

The owners and operators of each NO_X budget unit that has excess emissions in any ozone control period shall do the following:

(a) Surrender the NO_X allowances required for deduction under 326 IAC 10-4-10(k)(5).

(b) Pay any fine, penalty, or assessment or comply with any other remedy imposed under 326 IAC 10-4-10(k)(7).

E.1.6 Record Keeping Requirements [326 IAC 10-4-4(e)] [326 IAC 2-7-5(3)]

Unless otherwise provided, the owners and operators of the NO_X budget source and each NO_X budget unit at the source shall keep, either on site at the source or at a central location within Indiana for those owners or operators with unattended sources, each of the following documents for a period of five (5) years:

(a) The account certificate of representation for the NO_X authorized account representative for the source and each NO_X budget unit at the source and all documents that demonstrate the truth of the statements in the account certificate of representation, in accordance with 326 IAC 10-4-6(h). The certificate and documents shall be retained either on site at the source or at a central location within Indiana for those owners or operators with unattended sources beyond the five (5) year period until the documents are superseded because of the submission of a new account certificate of representation changing the NO_X authorized account representative.

(b) All emissions monitoring information, in accordance with 40 CFR 75 and 326 IAC 10-4-12, provided that to the extent that 40 CFR 75 and 326 IAC 10-4-12 provide for a three (3) year period for record keeping, the three (3) year period shall apply.

(c) Copies of all reports, compliance certifications, and other submissions and all records made or required under the NO_X budget trading program.

(d) Copies of all documents used to complete a NO_X budget permit application and any other submission under the NO_X budget trading program or to demonstrate compliance with the requirements of the NO_X budget trading program.

This period may be extended for cause, at any time prior to the end of five (5) years, in writing by IDEM, OAQ or the U.S. EPA. Records retained at a central location within Indiana shall be available immediately at the location and submitted to IDEM, OAQ or U.S. EPA within three (3) business days following receipt of a written request. Nothing in 326 IAC 10-4-4(e) shall alter the record retention requirements for a source under 40 CFR 75. Unless otherwise provided, all records shall be maintained in accordance with Section C - General Record Keeping Requirements, of this permit.

E.1.7 Reporting Requirements [326 IAC 10-4-4(e)]

(a) The NO_X authorized account representative of the NO_X budget source and each NO_X budget unit at the source shall submit the reports and compliance certifications required under the NO_X budget trading program, including those under 326 IAC 10-4-8, 326 IAC 10-4-12, or 326 IAC 10-4-13.

(b) Pursuant to 326 IAC 10-4-4(e) and 326 IAC 10-4-6(e)(1), each submission shall include the following certification statement by the NO_X authorized account representative: "I am authorized to make this submission on behalf of the owners and operators of the NO_X budget sources or NO_X budget units for which the submission is made. I certify under penalty of law that I have personally examined, and am familiar with, the statements and information submitted in this document and all its attachments. Based on my inquiry of those individuals with primary responsibility for obtaining the information, I certify that the statements and information are to the best of my knowledge and belief true, accurate, and complete. I am aware that there are significant penalties for submitting false statements and information or omitting required statements and information, including the possibility of fine or imprisonment."

(c) Where 326 IAC 10-4 requires a submission to IDEM, OAQ, the NO_X authorized account representative shall submit required information to:

Indiana Department of Environmental Management
Office of Air Quality
100 North Senate Avenue
MC 61-53 IGCN 1003
Indianapolis, Indiana 46204-2251

(d) Where 326 IAC 10-4 requires a submission to U.S. EPA, the NO_X authorized account representative shall submit required information to:

U.S. Environmental Protection Agency
Clean Air Markets Division
1200 Pennsylvania Avenue, NW
Mail Code 6204N
Washington, DC 20460

E.1.8 Liability [326 IAC 10-4-4(f)]

The owners and operators of each NO_X budget source shall be liable as follows:

(a) Any person who knowingly violates any requirement or prohibition of the NO_X budget trading program, a NO_X budget permit, or an exemption under 326 IAC 10-4-3 shall be subject to enforcement pursuant to applicable state or federal law.

(b) Any person who knowingly makes a false material statement in any record, submission, or report under the NO_X budget trading program shall be subject to criminal enforcement pursuant to the applicable state or federal law.

(c) No permit revision shall excuse any violation of the requirements of the NO_X budget trading program that occurs prior to the date that the revision takes effect.

(d) Each NO_X budget source and each NO_X budget unit shall meet the requirements of the NO_X budget trading program.

(e) Any provision of the NO_X budget trading program that applies to a NO_X budget source, including a provision applicable to the NO_X authorized account representative of a NO_X budget source, shall also apply to the owners and operators of the source and of the NO_X budget units at the source.

(f) Any provision of the NO_X budget trading program that applies to a NO_X budget unit, including a provision applicable to the NO_X authorized account representative of a NO_X budget unit, shall also apply to the owners and operators of the unit. Except with regard to the requirements applicable to units with a common stack under 40 CFR 75 and 326 IAC 10-4-12, the owners and operators and the NO_X authorized account representative of one (1) NO_X budget unit shall not be liable for any violation by any other NO_X budget unit of which they are not owners or operators or the NO_X authorized account representative and that is located at a source of which they are not owners or operators or the NO_X authorized account representative.

E.1.9 Effect on Other Authorities [326 IAC 10-4-4(g)]

No provision of the NO_X budget trading program, a NO_X budget permit application, a NO_X budget permit, or an exemption under 326 IAC 10-4-3 shall be construed as exempting or excluding the owners and operators and, to the extent applicable, the NO_X authorized account representative of a NO_X budget source or NO_X budget unit from compliance with any other provision of the applicable, approved state implementation plan, a federally enforceable permit, or the CAA.

SECTION E.2 Clean Air Interstate (CAIR) Nitrogen Oxides Ozone Season Trading Program – CAIR Permit for CAIR Units Under 326 IAC 24-3-1(a)

ORIS Code: 50733

CAIR Permit for CAIR Units Under 326 IAC 24-3-1(a)

(a) One (1) Boiler House No. 4, emissions group 720, comprised of the following:

(1) Two (2) Boilers, 720 No. 1 and No. 2, identified as O4B10459 and O4B20460, constructed in 1967, equipped to combust natural gas, blast furnace gas and fuel oil, with a heat input of 500 MMBtu per hour each, exhausting through Stacks O46268 and O46269, respectively.

(2) One (1) Boiler, 720 No. 3, identified as O4B30461, constructed in 1967, equipped to combust blast furnace gas and natural gas, with a heat input of 500 MMBtu per hour, exhausting through Stack O46270.

(b) One (1) Turbo Blower Boiler House (TBBH), emissions group 701, comprised of the following:

(1) Three (3) Boilers, 701 No. 1, No. 2, and No. 3, identified as OTB10462, OTB20463 and OTB30464, constructed in 1948, equipped to combust blast furnace gas, coke oven gas, fuel oil and natural gas, with a heat input of 410 MMBtu per hour each, exhausting through Stacks OT6271, OT6272 and OT6273, respectively.

(2) One (1) Boiler 701 No. 5, identified as OTB50466, constructed in 1958, equipped to combust blast furnace gas, coke oven gas, fuel oil and natural gas, with a heat input of 410 MMBtu per hour, exhausting through Stack OT6275.

(3) One (1) boiler 701 No. 6, identified as OTB60467, constructed prior to August 17, 1971, equipped to combust blast furnace gas and natural gas, with a heat input capacity of 710 MMBtu per hour, exhausting through Stack OT6276.

(The information describing the process contained in this facility description box is descriptive information and does not constitute enforceable conditions.)

E.2.1 Automatic Incorporation of Definitions [326 IAC 24-3-7(e)] [40 CFR 97.323(b)]

This CAIR permit is deemed to incorporate automatically the definitions of terms under 326 IAC 24-3-2.

E.2.2 Standard Permit Requirements [326 IAC 24-3-4(a)] [40 CFR 97.306(a)]

(a) The owners and operators of the CAIR NO_X ozone season source and CAIR NO_X ozone season units shall operate each unit in compliance with this CAIR permit.

(b) The CAIR NO_X ozone season units subject to this CAIR permit are 701B1, 701B2, 701B3, 701B5, 701B6, 720B1, 720B2 and 720B3.

E.2.3 Monitoring, Reporting, and Record Keeping Requirements [326 IAC 24-3-4(b)] [40 CFR 97.306(b)]

(a) The owners and operators, and the CAIR designated representative, of each CAIR NO_X ozone season source and CAIR NO_X ozone season unit at the source shall comply with the monitoring, reporting, and record keeping requirements of 326 IAC 24-3-11.

(b) The emissions measurements recorded and reported in accordance with 326 IAC 24-3-11 shall be used to determine compliance by each CAIR NO_X ozone season source with

the CAIR NO_X ozone season emissions limitation under 326 IAC 24-3-4(c) and Condition G.4. Nitrogen Oxides Ozone Season Emission Requirements.

E.2.4 Nitrogen Oxides Ozone Season Emission Requirements [326 IAC 24-3-4(c)] [40 CFR 97.306(c)]

(a) As of the allowance transfer deadline, the owners and operators of the each CAIR NO_X ozone season source and each CAIR NO_X ozone season unit at the source shall hold, in the source's compliance account, CAIR NO_X ozone season allowances available for compliance deductions for the control period under 326 IAC 24-3-9(i) in an amount not less than the tons of total nitrogen oxides emissions for the control period from all CAIR NO_X ozone season units at the source, as determined in accordance with 326 IAC 24-3-11.

(b) A CAIR NO_X unit shall be subject to the requirements under (a) above and 326 IAC 24-3-4(c)(1) starting on the deadline for meeting the unit's monitor certifications requirements under 326 IAC 24-3-11(C)(1), 11(c)(2),11(c)(3), or 11(c)(7) and for each control period thereafter.

(c) A CAIR NO_X ozone season allowance shall not be deducted for compliance with the requirements under (a) above and 326 IAC 24-3-4(c)(1), for a control period in a calendar year before the year for which the CAIR NO_X ozone season allowance was allocated.

(d) CAIR NO_X ozone season allowances shall be held in, deducted from, or transferred into or among CAIR NO_X ozone season allowance tracking system accounts in accordance with 326 IAC 24-3-9, 326 IAC 24-3-10, and 326 IAC 24-3-12.

(e) A CAIR NO_X allowance is a limited authorization to emit one (1) ton of nitrogen oxides in accordance with the CAIR NO_X ozone season trading program. No provision of the CAIR NO_X ozone season trading program, the CAIR permit application, the CAIR permit, or an exemption under 326 IAC 24-3-3 and no provision of law shall be construed to limit the authority of the State of Indiana or the United States to terminate or limit the authorization.

(f) A CAIR NO_X allowance does not constitute a property right.

(g) Upon recordation by the U.S. EPA under 326 IAC 24-3-8, 326 IAC 24-3-9, 326 IAC 24-3-10, or 326 IAC 24-3-12, every allocation, transfer, or deduction of a CAIR NO_X ozone season allowance to or from a CAIR NO_X ozone season source's compliance account is incorporated automatically in this CAIR permit.

E.2.5 Excess Emissions Requirements [326 IAC 24-3-4(d)] [40 CFR 97.306(d)]

(a) The owners and operators of a CAIR NO_X ozone season source and each CAIR NO_X ozone season unit that emits nitrogen oxides during any control period in excess of the CAIR NO_X ozone season emissions limitation shall do the following:

(1) Surrender the CAIR NO_X ozone season allowances required for deduction under 326 IAC 24-3-9(j)(4).

(2) Pay any fine, penalty, or assessment or comply with any other remedy imposed, for the same violations, the Clean Air Act (CAA) or applicable state law.

Each ton of such excess emissions and each day of such control period shall constitute a separate violation of 326 IAC 24-3-4, the Clean Air Act (CAA), and applicable state law.

E.2.6 Record Keeping Requirements [326 IAC 24-3-4(e)] [326 IAC 2-7-5(3)] [40 CFR 97.306(e)]

Unless otherwise provided, the owners and operators of the CAIR NO_X ozone season source and each CAIR NO_X ozone season unit at the source shall keep on site at the source or at a central location within Indiana for those owners or operators with unattended sources, each of the following documents for a period of five (5) years from the date the document was created:

(a) The certificate of representation under 326 IAC 24-3-6(h) for the CAIR designated representative for the source and each CAIR NO_X ozone season unit at the source and all documents that demonstrate the truth of the statements in the certificate of representation. The certificate and documents shall be retained on site at the source or at a central location within Indiana for those owners or operators with unattended sources beyond such five (5) year period until such documents are superseded because of the submission of a new account certificate of representation under 326 IAC 24-3-6(h) changing the CAIR designated representative.

(b) All emissions monitoring information, in accordance with 326 IAC 24-3-11, provided that to the extent that 326 IAC 24-3-11 provides for a three (3) year period for record keeping, the three (3) year period shall apply.

(c) Copies of all reports, compliance certifications, and other submissions and all records made or required under the CAIR NO_X ozone season trading program.

(d) Copies of all documents used to complete a CAIR permit application and any other submission under the CAIR NO_X ozone season trading program or to demonstrate compliance with the requirements of the CAIR NO_X ozone season trading program.

This period may be extended for cause, at any time before the end of five (5) years, in writing by IDEM, OAQ or the U.S. EPA. Unless otherwise provided, all records shall be maintained in accordance with Section C - General Record Keeping Requirements, of this permit.

E.2.7 Reporting Requirements [326 IAC 24 3 4(e) [40 CFR 97.306(e)]

(a) The CAIR designated representative of the CAIR NO_X ozone season source and each CAIR NO_X ozone season unit at the source shall submit the reports required under the CAIR NO_X ozone season trading program, including those under 326 IAC 24-3-11.

(b) Pursuant 326 IAC 24-3-4(e) and 326 IAC 24-3-6(e)(1), each submission under the CAIR NO_X ozone season trading program shall include the following certification statement by the CAIR designated representative: “I am authorized to make this submission on behalf of the owners and operators of the source or units for which the submission is made. I certify under penalty of law that I have personally examined, and am familiar with, the statements and information submitted in this document and all its attachments. Based on my inquiry of those individuals with primary responsibility for obtaining the information, I certify that the statements and information are to the best of my knowledge and belief true, accurate, and complete. I am aware that there are significant penalties for submitting false statements and information or omitting required statements and information, including the possibility of fine or imprisonment."

(c) Where 326 IAC 24-3 requires a submission to IDEM, OAQ, the CAIR designated representative shall submit required information to:

Indiana Department of Environmental Management
Office of Air Quality
100 North Senate Avenue
MC 61 53, IGCN 1003
Indianapolis, Indiana 46204-2251

(d) Where 326 IAC 24-3 requires a submission to U.S. EPA, the CAIR designated representative shall submit required information to:

U.S. Environmental Protection Agency
Clean Air Markets Division
1200 Pennsylvania Avenue, NW
Mail Code 6204N
Washington, DC 20460

E.2.8 Liability [326 IAC 24-3-4(f)] [40 CFR 97.306(f)]

The owners and operators of each CAIR NO_X ozone season source and each CAIR NO_X ozone season unit shall be liable as follows:

(a) Each CAIR NO_X ozone season source and each CAIR NO_X ozone season unit shall meet the requirements of the CAIR NO_X ozone season trading program.

(b) Any provision of the CAIR NO_X ozone season trading program that applies to a CAIR NO_X ozone season source or the CAIR designated representative of a CAIR NO_X ozone season source shall also apply to the owners and operators of such source and of the CAIR NO_X ozone season units at the source.

(c) Any provision of the CAIR NO_X ozone season trading program that applies to a CAIR NO_X ozone season unit or the CAIR designated representative of a CAIR NO_X ozone season unit shall also apply to the owners and operators of such units.

E.2.9 Effect on Other Authorities [326 IAC 24-3-4(g)] [40 CFR 97.306(g)]

No provision of the CAIR NO_X ozone season trading program, a CAIR permit application, a CAIR permit, or an exemption under 326 IAC 24-3-3 shall be construed as exempting or excluding the owners and operators, and the CAIR designated representative, of a CAIR NO_X ozone season source or CAIR NO_X ozone season unit from compliance with any other provision of the applicable, approved state implementation plan, a federally enforceable permit, or the Clean Air Act (CAA).

SECTION F.1 FACILITY OPERATION CONDITIONS - NSPS, SUBPART Dc

Emissions Unit Description: Note: Complete Descriptions are shown in Section A.2.

CASP A

(m) One (1) Particle Fusion Reactor (PFR) afterburner, identified as PFRAB A1, exhausting through a clean energy recovery process (CERP) to one (1) spray scrubber (OR-A-10-SR1010), two (2) cyclones in parallel (collectively identified asOR-A-10-CY-1115), and one (1) baghouse (OR-A-10-DC1020), in series, exhausting to stack OR-A-10-ST1025.

(n) One (1) Particle Fusion Reactor (PFR) afterburner, identified as PFRAB A2, exhausting through a clean energy recovery process (CERP) to one (1) spray scrubber (OR-A-10-SR2010), two (2) cyclones in parallel (collectively identified asOR-A-10-CY-2115), and one (1) baghouse (OR-A-10-DC2020), in series, exhausting to stack OR-A-10-ST2025.

CASP B

(m) One (1) Particle Fusion Reactor (PFR) afterburner, identified as PFRAB B1, exhausting through a clean energy recovery process (CERP) to one (1) spray scrubber (OR-B-10-SR1010), two (2) cyclones in parallel (collectively identified asOR-B-10-CY-1115), and one (1) baghouse (OR-B-10-DC1020), in series, exhausting to stack OR-B-10-ST1025.

(n) One (1) Particle Fusion Reactor (PFR) afterburner, identified as PFRAB B2, exhausting through a clean energy recovery process (CERP) to one (1) spray scrubber (OR-B10-SR2010), two (2) cyclones in parallel (collectively identified asOR-B-10-CY-2115), and one (1) baghouse (OR-B-10-DC2020), in series, exhausting to stack OR-B-10-ST2025.

CASP C

(m) One (1) Particle Fusion Reactor (PFR) afterburner, identified as PFRAB C1, exhausting through a clean energy recovery process (CERP) to one (1) spray scrubber (OR-C-10-SR1010), two (2) cyclones in parallel (collectively identified asOR-C-10-CY-1115), and one (1) baghouse (OR-C-09-DC1020), in series, exhausting to stack OR-C-10-ST1025.

(n) One (1) Particle Fusion Reactor (PFR) afterburner, identified as PFRAB C2, exhausting through a clean energy recovery process (CERP) to one (1) spray scrubber (OR-C-10-SR2010), two (2) cyclones in parallel (collectively identified asOR-C-10-CY-2115), and one (1) baghouse (OR-C-10-DC2020), in series, exhausting to stack OR-C-10-ST2025.

CASP D

(m) One (1) Particle Fusion Reactor (PFR) afterburner, identified as PFRAB D1, exhausting through a clean energy recovery process (CERP) to one (1) spray scrubber (OR-D-10-SR1010), two (2) cyclones in parallel (collectively identified asOR-D-10-CY-1115), and one (1) baghouse (OR-D-109-DC1020), in series, exhausting to stack OR-D-10-ST1025.

(n) One (1) Particle Fusion Reactor (PFR) afterburner, identified as PFRAB D2, exhausting through a clean energy recovery process (CERP) to one (1) spray scrubber (OR-D-10-SR2010), two (2) cyclones in parallel (collectively identified asOR-D-10-CY-2115), and one (1) baghouse (OR-D-10-DC2020), in series, exhausting to stack OR-D-10-ST2025.

Under 40 CFR 60, Subpart Dc, each afterburner listed in this section is considered an affected steam generating unit.

(c) Electro-galvanizing Line (EGL)

(2) One (1) natural gas fired Boiler No. 1 in the EGL Boiler House, identified as HBB10675, constructed in 1978 and modified in 2001, with a heat input capacity of 39.147 MMBtu per hour, exhausting through stack HB6559.

(The information describing the process contained in this facility description box is descriptive information and does not constitute enforceable conditions.)

New Source Performance Standards (NSPS) Requirements [326 IAC 2-7-5(1)]

F.1.1 General Provisions Relating to New Source Performance Standards [40 CFR Part 60, Subpart A] [326 IAC 12-1]

(a) Pursuant to 40 CFR 60.1, the Permittee shall comply with the provisions of 40 CFR Part 60 Subpart A - General Provisions, which are incorporated by reference as 326 IAC 12-1, except as otherwise specified in 40 CFR Part 60, Subpart Dc.

(b) Pursuant to 40 CFR 60.19, the Permittee shall submit all required notifications and reports to:

Indiana Department of Environmental Management
Compliance and Enforcement Branch, Office of Air Quality
100 North Senate Avenue
MC 61-53 IGCN 1003
Indianapolis, Indiana 46204-2251

F.1.2 Standards of Performance for Small Industrial-Commercial-Institutional Steam Generating Units [40 CFR Part 60, Subpart Dc] [326 IAC 12]

Pursuant to 40 CFR Part 60, Subpart Dc, the Permittee shall comply with the provisions of the Standards of Performance for Small Industrial-Commercial-Institutional Steam Generating Units (included as Attachment B of this permit), which are incorporated by reference as 326 IAC 12, as specified as follows:

(1) 40 CFR 60.40c (a), (b), and (c)
(2) 40 CFR 60.41c
(3) 40 CFR 60.48c (a)(1), (a)(2), (a)(3), (g)(1), (g)(2), (i), and (j)

SECTION F.2 FACILITY OPERATION CONDITIONS - NSPS, SUBPART Y

Emissions Unit Description:

Carbon Alloy Synthesis Plant A (CASP A)

(a) Raw Material Receiving Handling and Silos A, identified as RMRHSA, consisting of the following:

(1) One (1) CDA1 wet coal feed hopper discharge, with a rated capacity of 50 tons per hour, one (1) vibratory feeder, with a rated capacity of 50 tons per hour, and associated drag conveyors, each with a rated capacity of 50 tons per hour, ducted to one (1) baghouse (OR-A-01-DC1105), exhausting to stack OR-A-01-ST1105.

(2) One (1) CDA2 wet coal feed hopper discharge, with a rated capacity of 50 tons per hour, one (1) vibratory feeder, with a rated capacity of 50 tons per hour, and associated drag conveyors, each with a rated capacity of 50 tons per hour, ducted to one (1) dust collector (OR-A-01-DC2105), exhausting to stack OR-A-01-ST2105.

(3) Five (5) dry coal storage silos, each with a storage capacity of 240 tons of dried coal, ducted to dedicated baghouses (OR-A-02-DC1070, OR-A-02-DC2070, OR-A-02-DC3070, OR-A-02-DC4070, and OR-A-02-DC5070, respectively), exhausting to stacks OR-A-02-ST1070, OR-A-02-ST2070, OR-A-02-ST3070, OR-A-02-ST4070, and OR-A-02-ST5070, respectively.

(4) Five (5) blend #1 weigh feeders, each with a rated capacity of 40 tons per hour, and one (1) drag conveyor, with a rated capacity of 60 tons per hour, ducted to one (1) baghouse (OR-A-03-DC1105), exhausting to stack OR-A-03-ST1105.

(5) Four (4) blend #1 feed hoppers, with a rated capacity of 30 tons per hour, and two (2) blend #1 hopper feed drag conveyors, each with a rated capacity of 60 tons per hour, ducted to one (1) baghouse (OR-A-04-DC1105), exhausting to stack OR-A-04-ST1105.

Under 40 CFR 60, Subpart Y, the RMRHSA facilities are considered coal processing and conveying equipment.

(b) One (1) coal dryer and associated dried coal conveyors, collectively identified as CDA1, approved for construction in 2010, with a maximum capacity of 50 tons per hour, utilizing heated air from the FER A1 and FER A2 air to air heat exchangers to dry the coal, ducted to three (3) cyclones in parallel (collectively identified as OR-A-01-CY-1305) and one (1) dust collector (OR-A-01-DC1205), in series, exhausting to the coal dryer for heat recovery, with excess heat exhausting to stack OR-A-01-ST1215. Under 40 CFR 60, Subpart Y, the dryer is considered a thermal dryer and the associated conveyors are considered coal conveying equipment.

(c) One (1) coal crusher and associated crushed coal conveyors, collectively identified as CCA1, approved for construction in 2010, with a maximum capacity of 100 tons per hour, ducted to one (1) dust collector (OR-A-02-DC1105), exhausting to stack OR-A-02-ST1105. Under 40 CFR 60, Subpart Y, this is considered coal processing and conveying equipment.

(d) One (1) coal dryer and associated dried coal conveyors, collectively identified as CDA2, approved for construction in 2010, with a maximum capacity of 50 tons per hour, utilizing heated air from the FER A3 and FER A4 air to air heat exchangers to dry the coal, ducted to three (3) cyclones in parallel (collectively identified as OR-A-01-CY-2305) and one (1) dust collector (OR-A-01-DC2205), in series, exhausting to the coal dryer for heat recovery, with excess heat exhausting to stack OR-A-01-ST2215. Under 40 CFR 60, Subpart Y, the dryer is considered a thermal dryer and the associated conveyors are considered coal conveying equipment.

(e) One (1) coal crusher and associated crushed coal conveyors, collectively identified as CCA2, approved for construction in 2010, with a maximum capacity of 50 tons per hour, ducted to one (1) dust collector (OR-A-02-DC2105), exhausting to stack OR-A-02-ST2105. Under 40 CFR 60, Subpart Y, this is considered coal processing and conveying equipment.

(k) One (1) Carborec Storage and Blending Area A, identified as CBSBA, approved for construction in 2010, consisting of the following:

(1) Carborec crusher feed drag conveyors, each with a rated capacity of 60 tons per hour, ducted to a baghouse (OR-A-05-DC1205), exhausting to stack OR-A-05-ST1205.

(2) Six (6) weigh feeders, each with a rated capacity of 40 tons per hour, and blend #2 drag conveyors, each with a rated capacity of 75 tons per hour, ducted to a baghouse (OR-A-05-DC1405), exhausting to stack OR-A-05-ST1405.

(3) One (1) Carborec storage silo, with a storage capacity of 240 tons, ducted to a baghouse (OR-A-05-DC6070), exhausting to stack OR-A-05-ST6070.

(4) One (1) blend #2 surge bin, with a storage capacity of 440 tons, ducted to a baghouse (OR-A-06-DC1405), exhausting to stack OR-A-06-ST1405.

(5) Three (3) blend #2 weigh feeders, three (3) blend #2 drag conveyors, three (3) blend #2 crushers, three (3) hi-intensive mixers, three (3) pug mills, and three (3) densifers, each with a rated capacity of 30 tons per hour, billet belt conveyors and one (1) billet roller screener, each with a rated capacity of 80 tons per hour, and one (1) billet fines weigh feeder, with a rated capacity of 10 tons per hour, ducted to a baghouse (OR-A-06-DC1205), exhausting to stack OR-A-06-ST1205.

Under 40 CFR 60, Subpart Y, these facilities are considered coal processing and conveying equipment, or coal storage systems.

CASP B

(a) Raw Material Receiving Handling and Silos B, identified as RMRHSB, approved for construction in 2010, consisting of the following:

(1) One (1) CDB1 wet coal feed hopper discharge, with a rated capacity of 50 tons per hour, one (1) vibratory feeder, with a rated capacity of 50 tons per hour, and associated drag conveyors, each with a rated capacity of 50 tons per hour, ducted to one (1) baghouse (OR-B-01-DC1105), exhausting to stack OR-B-01-ST1105.

(2) One (1) CDB2 wet coal feed hopper discharge, with a rated capacity of 50 tons per hour, one (1) vibratory feeder, with a rated capacity of 50 tons per hour, and associated drag conveyors, each with a rated capacity of 50 tons per hour, ducted to one (1) dust collector (OR-B-01-DC2105), exhausting to stack OR-B-01-ST210.

(3) Five (5) dry coal storage silos, each with a storage capacity of 240 tons of dried coal, ducted to dedicated baghouses (OR-B-02-DC1070, OR-B-02-DC2070, OR-B-02-DC3070, OR-B-02-DC4070, and OR-B-02-DC5070, respectively), exhausting to stacks OR-B-02-ST1070, OR-B-02-ST2070, OR-B-02-ST3070, OR-B-02-ST4070, and OR-B-02-ST5070, respectively.

(4) Five (5) blend #1 weigh feeders, each with a rated capacity of 40 tons per hour, and one (1) drag conveyor, with a rated capacity of 60 tons per hour, ducted to one (1) baghouse (OR-B-03-DC1105), exhausting to stack OR-B-03-ST1105.

(5) Four (4) blend #1 feed hoppers, with a rated capacity of 30 tons per hour, and two (2) blend #1 hopper feed drag conveyors, each with a rated capacity of 60 tons per hour, ducted to one (1) baghouse (OR-B-04-DC1105), exhausting to stack OR-B-04-ST1105.

Under 40 CFR 60, Subpart Y, the RMRHSB facilities are considered coal processing and conveying equipment.

(b) One (1) coal dryer and associated dried coal conveyors, collectively identified as CDB1, approved for construction in 2010, with a maximum capacity of 50 tons per hour, utilizing heated air from the FER B1 and FER B2 air to air heat exchangers to dry the coal, ducted to three (3) cyclones in parallel (collectively identified as OR-B-01-CY-1305) and one (1) dust collector (OR-B-01-DC1205), in series, exhausting to the coal dryer for heat recovery, with excess heat exhausting to stack OR-B-01-ST1215. Under 40 CFR 60, Subpart Y, the dryer is considered a thermal dryer and the associated conveyors are considered coal conveying equipment.

(c) One (1) coal crusher and associated crushed coal conveyors, collectively identified as CCB1, approved for construction in 2010, with a maximum capacity of 100 tons per hour, ducted to one (1) dust collector (OR-B-02-DC1105), exhausting to stack OR-B-02-ST1105. Under 40 CFR 60, Subpart Y, this is considered coal processing and conveying equipment.

(d) One (1) coal dryer and associated dried coal conveyors, collectively identified as CDB2, approved for construction in 2010, with a maximum capacity of 50 tons per hour, utilizing heated air from the FER B3 and FER B4 air to air heat exchangers to dry the coal, ducted to three (3) cyclones in parallel (collectively identified as OR-B-01-CY-2305) and one (1) dust collector (OR-B-01-DC2205), in series, exhausting to the coal dryer for heat recovery, with excess heat exhausting to stack OR-B-01-ST2215. Under 40 CFR 60, Subpart Y, the dryer is considered a thermal dryer and the associated conveyors are considered coal conveying equipment.

(e) One (1) coal crusher and associated crushed coal conveyors, collectively identified as CCB2, approved for construction in 2010, with a maximum capacity of 50 tons per hour, ducted to one (1) dust collector (OR-B-02-DC2105), exhausting to stack OR-B-02-ST2105. Under 40 CFR 60, Subpart Y, this is considered coal processing and conveying equipment.

(k) One (1) Carborec Storage and Blending Area B, identified as CBSBB, approved for construction in 2010, consisting of the following:

(1) Carborec crusher feed drag conveyors, each with a rated capacity of 60 tons per hour, ducted to a baghouse (OR-B-05-DC1205), exhausting to stack OR-B-05-ST1205.

(2) Six (6) weigh feeders, each with a rated capacity of 40 tons per hour, and blend #2 drag conveyors, each with a rated capacity of 75 tons per hour, ducted to a baghouse (OR-B-05-DC1405), exhausting to stack OR-B-05-ST1405.

(3) One (1) Carborec storage silo, with a storage capacity of 240 tons, ducted to a baghouse (OR-B-05-DC6070), exhausting to stack OR-B-05-ST6070.

(4) One (1) blend #2 surge bin, with a storage capacity of 440 tons, ducted to a baghouse (OR-B-06-DC1405), exhausting to stack OR-B-06-ST1405.

(5) Three (3) blend #2 weigh feeders, three (3) blend #2 drag conveyors, three (3) blend #2 crushers, three (3) hi-intensive mixers, three (3) pug mills, and three (3) densifers, each with a rated capacity of 30 tons per hour, billet belt conveyors and one (1) billet roller screener, each with a rated capacity of 80 tons per hour, and one (1) billet fines weigh feeder, with a rated capacity of 10 tons per hour, ducted to a baghouse (OR-B-06-DC1205), exhausting to stack OR-B-06-ST1205.

Under 40 CFR 60, Subpart Y, these facilities are considered coal processing and conveying equipment, or coal storage systems.

CASP C

(a) Raw Material Receiving Handling and Silos C, identified as RMRHSC, approved for construction in 2010, consisting of the following:

(1) One (1) CDC1 wet coal feed hopper discharge, with a rated capacity of 50 tons per hour, one (1) vibratory feeder, with a rated capacity of 50 tons per hour, and associated drag conveyors, each with a rated capacity of 50 tons per hour, ducted to one (1) baghouse (OR-C-01-DC1105), exhausting to stack OR-C-01-ST1105.

(2) One (1) CDC2 wet coal feed hopper discharge, with a rated capacity of 50 tons per hour, one (1) vibratory feeder, with a rated capacity of 50 tons per hour, and associated drag conveyors, each with a rated capacity of 50 tons per hour, ducted to one (1) dust collector (OR-C-01-DC2105), exhausting to stack OR-C-01-ST2105.

(3) Five (5) dry coal storage silos, each with a storage capacity of 240 tons of dried coal, ducted to dedicated baghouses (OR-C-02-DC1070, OR-C-02-DC2070, OR-C-02-DC3070, OR-C-02-DC4070, and OR-C-02-DC5070, respectively), exhausting to stacks OR-C-02-ST1070, OR-C-02-ST2070, OR-C-02-ST3070, OR-C-02-ST4070, and OR-C-02-ST5070, respectively.

(4) Five (5) blend #1 weigh feeders, each with a rated capacity of 40 tons per hour, and one (1) drag conveyor, with a rated capacity of 60 tons per hour, ducted to one (1) baghouse (OR-C-03-DC1105), exhausting to stack OR-C-03-ST1105.

(5) Four (4) blend #1 feed hoppers, with a rated capacity of 30 tons per hour, and two (2) blend #1 hopper feed drag conveyors, each with a rated capacity of 60 tons per hour, ducted to one (1) baghouse (OR-C-04-DC1105), exhausting to stack OR-C-04-ST1105.

Under 40 CFR 60, Subpart Y, the RMRHSC facilities are considered coal processing and conveying equipment.

(b) One (1) coal dryer and associated dried coal conveyors, collectively identified as CDC1, approved for construction in 2010, with a maximum capacity of 50 tons per hour, utilizing heated air from the FER C1 and FER C2 air to air heat exchangers to dry the coal, ducted to three (3) cyclones in parallel (collectively identified as OR-C-01-CY-1305) and one (1) dust collector (OR-C-01-DC1205), in series, exhausting to the coal dryer for heat recovery, with excess heat exhausting to stack OR-C-01-ST1215. Under 40 CFR 60, Subpart Y, the dryer is considered a thermal dryer and the associated conveyors are considered coal conveying equipment.

(c) One (1) coal crusher and associated crushed coal conveyors, collectively identified as CCC1, approved for construction in 2010, with a maximum capacity of 100 tons per hour, ducted to one (1) dust collector (OR-C-02-DC1105), exhausting to stack OR-C-02-ST1105. Under 40 CFR 60, Subpart Y, this is considered coal processing and conveying equipment.

(d) One (1) coal dryer and associated dried coal conveyors, collectively identified as CDC2, approved for construction in 2010, with a maximum capacity of 50 tons per hour, utilizing heated air from the FER C3 and FER C4 air to air heat exchangers to dry the coal, ducted to three (3) cyclones in parallel (collectively identified as OR-C-01-CY-2305) and one (1) dust collector (OR-C-01-DC2205), in series, exhausting to the coal dryer for heat recovery, with excess heat exhausting to stack OR-C-01-ST2215. Under 40 CFR 60, Subpart Y, the dryer is considered a thermal dryer and the associated conveyors are considered coal conveying equipment.

(e) One (1) coal crusher and associated crushed coal conveyors, collectively identified as CCC2, approved for construction in 2010, with a maximum capacity of 50 tons per hour, ducted to one (1) dust collector (OR-C-02-DC2105), exhausting to stack OR-C-02-ST2105. Under 40 CFR 60, Subpart Y, this is considered coal processing and conveying equipment.

(k) One (1) Carborec Storage and Blending Area C, identified as CBSBC, approved for construction in 2010, consisting of the following:

(1) Carborec crusher feed drag conveyors, each with a rated capacity of 60 tons per hour, ducted to a baghouse (OR-C-05-DC1205), exhausting to stack OR-C-05-ST1205.

(2) Six (6) weigh feeders, each with a rated capacity of 40 tons per hour, and blend #2 drag conveyors, each with a rated capacity of 75 tons per hour, ducted to a baghouse (OR-C-05-DC1405), exhausting to stack OR-C-05-ST1405.

(3) One (1) Carborec storage silo, with a storage capacity of 240 tons, ducted to a baghouse (OR-C-05-DC6070), exhausting to stack OR-C-05-ST6070.

(4) One (1) blend #2 surge bin, with a storage capacity of 440 tons, ducted to a baghouse (OR-C-06-DC1405), exhausting to stack OR-C-06-ST1405.

(5) Three (3) blend #2 weigh feeders, three (3) blend #2 drag conveyors, three (3) blend #2 crushers, three (3) hi-intensive mixers, three (3) pug mills, and three (3) densifers, each with a rated capacity of 30 tons per hour, billet belt conveyors and one (1) billet roller screener, each with a rated capacity of 80 tons per hour, and one (1) billet fines weigh feeder, with a rated capacity of 10 tons per hour, ducted to a baghouse (OR-C-06-DC1205), exhausting to stack OR-C-06-ST1205.

Under 40 CFR 60, Subpart Y, these facilities are considered coal processing and conveying equipment, or coal storage systems.

CASP D

(a) Raw Material Receiving Handling and Silos D, identified as RMRHSD, approved for construction in 2010, consisting of the following:

(1) One (1) CDD1 wet coal feed hopper discharge, with a rated capacity of 50 tons per hour, one (1) vibratory feeder, with a rated capacity of 50 tons per hour, and associated drag conveyors, each with a rated capacity of 50 tons per hour, ducted to one (1) baghouse (OR-D-01-DC1105), exhausting to stack OR-D-01-ST1105.

(2) One (1) CDD2 wet coal feed hopper discharge, with a rated capacity of 50 tons per hour, one (1) vibratory feeder, with a rated capacity of 50 tons per hour, and associated drag conveyors, each with a rated capacity of 50 tons per hour, ducted to one (1) dust collector (OR-D-01-DC2105), exhausting to stack OR-D-01-ST2105.

(3) Five (5) dry coal storage silos, each with a storage capacity of 240 tons of dried coal, ducted to dedicated baghouses (OR-D-02-DC1070, OR-D-02-DC2070, OR-D-02-DC3070, OR-D-02-DC4070, and OR-D-02-DC5070, respectively), exhausting to stacks OR-D-02-ST1070, OR-D-02-ST2070, OR-D-02-ST3070, OR-D-02-ST4070, and OR-D-02-ST5070, respectively

(4) Five (5) blend #1 weigh feeders, each with a rated capacity of 40 tons per hour, and one (1) drag conveyor, with a rated capacity of 60 tons per hour, ducted to one (1) baghouse (OR-D-03-DC1105), exhausting to stack OR-D-03-ST1105.

(5) Four (4) blend #1 feed hoppers, with a rated capacity of 30 tons per hour, and two (2) blend #1 hopper feed drag conveyors, each with a rated capacity of 60 tons per hour, ducted to one (1) baghouse (OR-D-04-DC1105), exhausting to stack OR-D-04-ST1105.

Under 40 CFR 60, Subpart Y, the RMRHSD facilities are considered coal processing and conveying equipment.

(b) One (1) coal dryer and associated dried coal conveyors, collectively identified as CDD1, approved for construction in 2010, with a maximum capacity of 50 tons per hour, utilizing heated air from the FER D1 and FER D2 air to air heat exchangers to dry the coal, ducted to three (3) cyclones in parallel (collectively identified as OR-D-01-CY-1305) and one (1) dust collector (OR-D-01-DC1205), in series, exhausting to the coal dryer for heat recovery, with excess heat exhausting to stack OR-D-01-ST1215. Under 40 CFR 60, Subpart Y, the dryer is considered a thermal dryer and the associated conveyors are considered coal conveying equipment.

(c) One (1) coal crusher and associated crushed coal conveyors, collectively identified as CCD1, approved for construction in 2010, with a maximum capacity of 100 tons per hour, ducted to one (1) dust collector (OR-D-02-DC1105), exhausting to stack OR-D-02-ST1105. Under 40 CFR 60, Subpart Y, this is considered coal processing and conveying equipment.

(d) One (1) coal dryer and associated dried coal conveyors, collectively identified as CDD2, approved for construction in 2010, with a maximum capacity of 50 tons per hour, utilizing heated air from the FER D3 and FER D4 air to air heat exchangers to dry the coal, ducted to three (3) cyclones in parallel (collectively identified as OR-D-01-CY-2305) and one (1) dust collector (OR-D-01-DC2205), in series, exhausting back into the coal dryer for heat recovery, with excess heat exhausting to stack OR-D-01-ST2215. Under 40 CFR 60, Subpart Y, the dryer is considered a thermal dryer and the associated conveyors are considered coal conveying equipment.

(e) One (1) coal crusher and associated crushed coal conveyors, collectively identified as CCD2, approved for construction in 2010, with a maximum capacity of 50 tons per hour, ducted to one (1) dust collector (OR-D-02-DC2105), exhausting to stack OR-D-02-ST2105. Under 40 CFR 60, Subpart Y, this is considered coal processing and conveying equipment.

(k) One (1) Carborec Storage and Blending Area D, identified as CBSBD, approved for construction in 2010, consisting of the following:

(1) Carborec crusher feed drag conveyors, each with a rated capacity of 60 tons per hour, ducted to a baghouse (OR-D-05-DC1205), exhausting to stack OR-D-05-ST120.

(2) Six (6) weigh feeders, each with a rated capacity of 40 tons per hour, and blend #2 drag conveyors, each with a rated capacity of 75 tons per hour, ducted to a baghouse (OR-D-05-DC1405), exhausting to stack OR-D-05-ST1405.

(3) One (1) Carborec storage silo, with a storage capacity of 240 tons, ducted to a baghouse (OR-D-05-DC6070), exhausting to stack OR-D-05-ST6070.

(4) One (1) blend #2 surge bin, with a storage capacity of 440 tons, ducted to a baghouse (OR-D-06-DC1405), exhausting to stack OR-D-06-ST1405.

(5) Three (3) blend #2 weigh feeders, three (3) blend #2 drag conveyors, three (3) blend #2 crushers, three (3) hi-intensive mixers, three (3) pug mills, and three (3) densifers, each with a rated capacity of 30 tons per hour, billet belt conveyors and one (1) billet roller screener, each with a rated capacity of 80 tons per hour, and one (1) billet fines weigh

feeder, with a rated capacity of 10 tons per hour, ducted to a baghouse (OR-D-06-DC1205), exhausting to stack OR-D-06-ST1205.

Under 40 CFR 60, Subpart Y, these facilities are considered coal processing and conveying equipment, or coal storage systems.

CASP Coal Receiving and Handling

(a) Phase 1 CASP C and CASP D coal handling, approved for construction in 2010, consisting of the following:

(1) One (1) feed hopper and conveyor No.1 (PHS1-HC1), with a maximum rated capacity of 100 tons per hour, with emissions uncontrolled.

(2) Two (2) CASP C coal conveyors, identified as PHS1C-C1 and PHS1C-C2, each with a maximum rate of 100 tons per hour, with emissions uncontrolled.

(3) One (1) CASP C coal feed hopper No.2, identified as CASPC-FH2, with a maximum rate of 100 tons per hour, with hopper receiving emissions uncontrolled.

(4) Two (2) CASP D coal conveyors, identified as PHS1D-C1 and PHS1D-C2, each with a maximum rate of 100 tons per hour, with emissions uncontrolled.

(5) One (1) CASP D coal feed hopper No.2, identified as CASPD-FH2, with a maximum rate of 100 tons per hour, with hopper receiving emissions uncontrolled.

(b) Phase 2 CASP coal handling, approved for construction in 2010, consisting of the following:

(1) Two (2) CASP coal conveyors, identified as CASP-C1 and CASP-C2, each with a maximum rate of 100 tons per hour, with emissions uncontrolled.

(2) One (1) CASP rotary stacker CASP-RS1, with a maximum rate of 200 tons per hour, with emissions uncontrolled.

(3) Four (4) CASP coal conveyor feed hoppers No.1, identified as CASPA-FH1, CASPB-FH1, CASPC-FH1, and CASPD-FH1, each with a maximum rate of 100 tons per hour, with emissions uncontrolled.

(4) Two (2) CASP A coal conveyors, identified as CASPA-C1 and CASPA-C2, each with a maximum rated capacity of 100 tons per hour, with emissions uncontrolled.

(5) One (1) CASP A coal feed hopper No.2, identified as CASPA-FH2, with a maximum rate of 100 tons per hour, with hopper receiving emissions uncontrolled.

(6) Two (2) CASP B coal conveyors, identified as CASPB-C1 and CASPB-C2, each with a maximum rated capacity of 100 tons per hour, with emissions uncontrolled.

(7) One (1) CASP B coal feed hopper No.2, identified as CASPB-FH2, with a maximum rate of 100 tons per hour, with hopper receiving emissions uncontrolled.

(8) Two (2) CASP C coal conveyors, identified as CASPC-C1 and CASPC-C2, each with a maximum rated capacity of 100 tons per hour, with emissions uncontrolled.

(9) Two (2) CASP D coal conveyors, identified as CASPD-C1 and CASPD-C2, each with a maximum rated capacity of 100 tons per hour, with emissions uncontrolled.

Under 40 CFR 60, Subpart Y, the CASP Raw Material Receiving and Handling facilities are considered coal processing and conveying equipment, and coal storage systems.

(c) Storage Piles

(1) One (1) PHS1 intermediate coal storage pile No. 1, with a storage capacity of 0.25 acres.

(2) Four (4) PHS1 coal storage piles, with a combined storage capacity of 3.6 acres.

(3) One (1) PHS1 intermediate coal storage pile No. 2, with a storage capacity of 0.25 acres.

(4) Four (4) CASP coal storage piles, with a combined a storage capacity of 3.6 acres.

Under 40 CFR 60, Subpart Y, these storage piles are each considered open storage piles.

Insignificant Activities

CASP Coal Receiving and Handling: Phase 1 CASP C and CASP D Coal Handling

(1) Two (2) CASP C coal conveyors, approved for construction in 2012, identified as PHS1C-C3, and PHS1C-C4, each with a maximum rate of 100 tons per hour, with emissions uncontrolled.

(2) Two (2) CASP D coal conveyors, approved for construction in 2012, identified as PHS1D-C1, and PHS1D-C4, each with a maximum rate of 100 tons per hour, with emissions uncontrolled.

(The information describing the process contained in this facility description box is descriptive information and does not constitute enforceable conditions.)

New Source Performance Standards (NSPS) Requirements [326 IAC 2-7-5(1)]

F.2.1 General Provisions Relating to New Source Performance Standards [40 CFR Part 60, Subpart A] [326 IAC 12-1]

(a) Pursuant to 40 CFR 60.1, the Permittee shall comply with the provisions of 40 CFR Part 60 Subpart A - General Provisions, which are incorporated by reference as 326 IAC 12-1, except as otherwise specified in 40 CFR Part 60, Subpart Y.

(b) Pursuant to 40 CFR 60.19, the Permittee shall submit all required notifications and reports to:

Indiana Department of Environmental Management
Compliance and Enforcement Branch, Office of Air Quality
100 North Senate Avenue
MC 61-53 IGCN 1003
Indianapolis, Indiana 46204-2251

F.2.2 Standards of Performance for Coal Preparation Plants [40 CFR Part 60, Subpart Y] [326 IAC 12]

Pursuant to 40 CFR Part 60, Subpart Y, the Permittee shall comply with the provisions of the Standard of Performance for Coal Preparation Plants (included as Attachment C of this permit), which are incorporated by reference as 326 IAC 12, as specified as follows:

(1) 40 CFR 60.250 (a) and (d)
(2) 40 CFR 60.251
(3) 40 CFR 60.252 (b)(1)(i), (b)(2)(iii), (b)(3)(iii), (c)

(4) 40 CFR 60.253 (b)
(5) 40 CFR 60.254 (b) and (c)
(6) 40 CFR 60.255 (b) through (f) and (h)
(7) 40 CFR 60.257 (a), (b)(1) through (b)(5)
(8) 40 CFR 60.258 (a)(1) through (6), (b)(3), (c), and (d)

SECTION F.3 FACILITY OPERATION CONDITIONS - NSPS, SUBPART D

Emissions Unit Description:

Turboblower Boiler House (TBBH)

(d) One (1) boiler, No. 6, identified as OTB60467, constructed after August 17, 1971, equipped to combust blast furnace gas and natural gas, with a maximum heat input capacity of 710 MMBtu per hour, exhausting through Stack OT6276.

(The information describing the process contained in this facility description box is descriptive information and does not constitute enforceable conditions.)

New Source Performance Standards (NSPS) Requirements [326 IAC 2-7-5(1)]

F.3.1 General Provisions Relating to New Source Performance Standards [40 CFR Part 60, Subpart A] [326 IAC 12-1]

(a) Pursuant to 40 CFR 60.1, the Permittee shall comply with the provisions of 40 CFR Part 60 Subpart A - General Provisions, which are incorporated by reference as 326 IAC 12-1, except as otherwise specified in 40 CFR Part 60, Subpart D.

(b) Pursuant to 40 CFR 60.19, the Permittee shall submit all required notifications and reports to:

Indiana Department of Environmental Management
Compliance and Enforcement Branch, Office of Air Quality
100 North Senate Avenue
MC 61-53 IGCN 1003
Indianapolis, Indiana 46204-2251

F.3.2 Standards of Performance for Fossil-Fuel-Fired Steam Generators [40 CFR Part 60, Subpart D] [326 IAC 12]

Pursuant to 40 CFR Part 60, Subpart D, the Permittee shall comply with the provisions of the Standard of Performance for Fossil-Fuel-Fired Steam Generators (included as Attachment D of this permit), which are incorporated by reference as 326 IAC 12, as specified as follows:

(1) 40 CFR Part 60.40 (a), (b), c)
(2) 40 CFR Part 60.41
(3) 40 CFR Part 60.42(a)(1), (2)
(4) 40 CFR Part 60.44(a)(1)

SECTION F.4 FACILITYOPERATION CONDITIONS - NSPS, SUBPART Db

Emissions Unit Description: One (1) No. 2 Coke Plant Boiler House

(g) Two (2) boilers at the coke plant boiler house, identified as Boilers No. 9 CSS80164 and No. 10 CSS 80165, constructed in 2004, each with a maximum heat input capacity of 235 MMBtu/hr, exhausting to stacks CS6067 and CS6068, respectively. These boilers are equipped to burn natural gas and coke oven gas.

(h) One (1) lime storage silo with a maximum capacity of 20 tons per hour and emissions controlled by a baghouse LRS-1, constructed in 2001, exhausting inside the building.

(The information describing the process contained in this facility description box is descriptive information and does not constitute enforceable conditions.)

New Source Performance Standards (NSPS) Requirements [326 IAC 2-7-5(1)]

F.4.1 General Provisions Relating to New Source Performance Standards [40 CFR Part 60, Subpart A] [326 IAC 12-1]

(a) Pursuant to 40 CFR 60.1, the Permittee shall comply with the provisions of 40 CFR Part 60 Subpart A - General Provisions, which are incorporated by reference as 326 IAC 12-1, except as otherwise specified in 40 CFR Part 60, Subpart Db.

(b) Pursuant to 40 CFR 60.19, the Permittee shall submit all required notifications and reports to:

Indiana Department of Environmental Management
Compliance and Enforcement Branch, Office of Air Quality
100 North Senate Avenue
MC 61-53 IGCN 1003
Indianapolis, Indiana 46204-2251

F.4.2 Standards of Performance for Industrial-Commercial-Institutional Steam Generating Units [40 CFR Part 60, Subpart Db] [326 IAC 12]

Pursuant to 40 CFR Part 60, Subpart Db, the Permittee shall comply with the provisions of the Standard of Performance for Industrial-Commercial-Institutional Steam Generating Units (included as Attachment E of this permit) which are incorporated by reference as 326 IAC 12, as specified as follows:

(1) 40 CFR 60.40b(a)
(2) 40 CFR 60.41b
(3) 40 CFR 60.43b(a)(4)
(4) 40 CFR 60.44b(a)(1)(ii), 3(vi), (h), (i)
(5) 40 CFR 60.46b(c), (e),
(6) 40 CFR 60.48b(b), (c), (d), (e)(2)(i),(ii), (3), (f),
(7) 40 CFR 60.49b(b), (d)(1), (g)(1) through (10), (h)(2)(i), (4)(i), (o)

SECTION F.5 FACILITY OPERATION CONDITIONS - NSPS, SUBPART IIII

Emissions Unit Description:

CASP A

(r) Two (2) diesel-fired emergency generators, identified as EGA1 and EGA2, each with a maximum rated output of 1650 kW. Under 40 CFR 60, Subpart IIII, these are each considered an emergency stationary CI ICE.

(s) One (1) natural gas-fired emergency generator, identified as EGA3, with a maximum rated output of 450 kW. Under 40 CFR 60, Subpart IIII, this is considered an emergency stationary CI ICE.

CASP B

(r) Two (2) diesel-fired emergency generators, identified as EGB1 and EGB2, each with a maximum rated output of 1650 kW. Under 40 CFR 60, Subpart IIII, these are each considered an emergency stationary CI ICE.

(s) One (1) natural gas-fired emergency generator, identified as EGB3, with a maximum rated output of 450 kW. Under 40 CFR 60, Subpart IIII, this is considered an emergency stationary CI ICE.

CASP C

(r) Two (2) diesel-fired emergency generators, identified as EGC1 and EGC2, each with a maximum rated output of 1650 kW. Under 40 CFR 60, Subpart IIII, these are each considered an emergency stationary CI ICE.

(s) One (1) natural gas-fired emergency generator, identified as EGC3, with a maximum rated output of 450 kW. Under 40 CFR 60, Subpart IIII, this is considered an emergency stationary CI ICE.

CASP D

(r) Two (2) diesel-fired emergency generators, identified as EGD1 and EGD2, each with a maximum rated output of 1650 kW. Under 40 CFR 60, Subpart IIII, these are each considered an emergency stationary CI ICE.

(s) One (1) natural gas-fired emergency generator, identified as EGD3, with a maximum rated output of 450 kW. Under 40 CFR 60, Subpart IIII, this is considered an emergency stationary CI ICE.

Insignificant Activities

CASP A

(4) One (1) diesel-fired stationary fire pump, identified as FPA, approved for construction in 2010, with a maximum rated output of 315 Hp. Under 40 CFR 60, Subpart IIII, this is considered a fire pump stationary CI ICE.

CASP B

(4) One (1) diesel-fired stationary fire pump, identified as FPB, approved for construction in 2010, with a maximum rated output of 315 Hp. Under 40 CFR 60, Subpart IIII, this is considered a fire pump stationary CI ICE.

CASP C

(4) One (1) diesel-fired stationary fire pump, identified as FPC, approved for construction in 2010, with a maximum rated output of 315 Hp. Under 40 CFR 60, Subpart IIII, this is considered a fire pump stationary CI ICE.

CASP D

(4) One (1) diesel-fired stationary fire pump, identified as FPD, approved for construction in 2010, with a maximum rated output of 315 Hp. Under 40 CFR 60, Subpart IIII, this is considered a fire pump stationary CI ICE.

(The information describing the process contained in this facility description box is descriptive information and does not constitute enforceable conditions.)

New Source Performance Standards (NSPS) Requirements [326 IAC 2-7-5(1)]

F.5.1 General Provisions Relating to New Source Performance Standards [40 CFR Part 60, Subpart A] [326 IAC 12-1]

(a) Pursuant to 40 CFR 60.1, the Permittee shall comply with the provisions of 40 CFR Part 60 Subpart A - General Provisions, which are incorporated by reference as 326 IAC 12-1, except as otherwise specified in 40 CFR Part 60, Subpart IIII.

(b) Pursuant to 40 CFR 60.19, the Permittee shall submit all required notifications and reports to:

Indiana Department of Environmental Management
Compliance and Enforcement Branch, Office of Air Quality
100 North Senate Avenue
MC 61-53 IGCN 1003
Indianapolis, Indiana 46204-2251

F.5.2 Standards of Performance for Stationary Compression Ignition Internal Combustion Engines [40 CFR Part 60, Subpart IIII] [326 IAC 12]

Pursuant to 40 CFR Part 60, Subpart IIII, the Permittee shall comply with the following provisions of the Standards of Performance for Stationary Compression Ignition Internal Combustion Engines (included as Attachment F of this permit), which are incorporated by reference as 326 IAC 12, upon startup:

(1) 40 CFR 60.4200 (a)(2)
(2) 40 CFR 60.4205 (b), (c), and (d)
(3) 40 CFR 60.4206
(4) 40 CFR 60.4207 (a) and (b)
(5) 40 CFR 60.4208
(6) 40 CFR 60.4209
(7) 40 CFR 60.4211 (a), (c), (d)(1), (d)(2), and (e)
(8) 40 CFR 60.4213
(9) 40 CFR 60.4214 (b) and (c)
(10) 40 CFR 60.4217
(11) 40 CFR 60.4218
(12) 40 CFR 60.4219
(13) Table 3 to Subpart IIII of Part 60 (as applicable)
(14) Table 4 to Subpart IIII of Part 60 (as applicable)
(15) Table 5 to Subpart IIII of Part 60 (as applicable)

(16) Table 7 to Subpart IIII of Part 60 (as applicable)
(17) Table 8 to Subpart IIII of Part 60 (as applicable)

SECTION F.6 FACILITY OPERATION CONDITIONS - NESHAP, SUBPART ZZZZ

Emissions Unit Description: Note: Complete Descriptions are shown in Section A.2.

CASP A

(r) Two (2) diesel-fired emergency generators, identified as EGA1 and EGA2, each with a maximum rated output of 1650 kW. Under 40 CFR 63, Subpart ZZZZ, these are each considered a new emergency stationary RICE.

CASP B

(r) Two (2) diesel-fired emergency generators, identified as EGB1 and EGB2, each with a maximum rated output of 1650 kW. Under 40 CFR 63, Subpart ZZZZ, these are each considered a new emergency stationary RICE.

CASP C

(r) Two (2) diesel-fired emergency generators, identified as EGC1 and EGC2, each with a maximum rated output of 1650 kW. Under 40 CFR 63, Subpart ZZZZ, these are each considered a new emergency stationary RICE.

CASP D

(r) Two (2) diesel-fired emergency generators, identified as EGD1 and EGD2, each with a maximum rated output of 1650 kW. Under 40 CFR 63, Subpart ZZZZ, these are each considered a new emergency stationary RICE.

(The information describing the process contained in this facility description box is descriptive information and does not constitute enforceable conditions.)

National Emissions Standards for Hazardous Air Pollutants

F.6.1 General Provisions Relating to NESHAP [326 IAC 20-1] [40 CFR Part 63, Subpart A]

The Permittee shall comply with the provisions of 40 CFR Part 63, Subpart A – General Provisions, which are incorporated by reference as 326 IAC 20-1-1, except when otherwise specified in 40 CFR Part 63, Subpart ZZZZ.

F.6.2 National Emissions Standards for Hazardous Air Pollutants for Stationary Reciprocating Internal Combustion Engines [40 CFR 63, Subpart ZZZZ] [326 IAC 20-82]

Pursuant to 40 CFR 63, Subpart ZZZZ, the Permittee shall comply with the following provisions of the National Emissions Standards for Hazardous Air Pollutants for Stationary Reciprocating Internal Combustion Engines (included as Attachment G of this permit), which are incorporated by reference as 326 IAC 20-82, upon startup:

(1) 40 CFR 63.6580
(2) 40 CFR 63.6585 (a) and (b)
(3) 40 CFR 63.6590(a)(2)(i), (b)(1)(i)
(4) 40 CFR 63.6595(a)(3) (applicability date is upon startup),
(5) 40 CFR 63.6600(c)
(6) 40 CFR 63.6604(c)
(7) 40 CFR 63.6605
(8) 40 CFR 63.6640(f)
(9) 40 CFR 63.6645(f)

SECTION F.7 FACILITY OPERATION CONDITIONS - NESHAP, SUBPART L

Emissions Unit Description: The Coke Battery Operations

(a) No. 2 Coke Battery

(1) One (1) six (6) meter tall vertical flue coke battery with 57 ovens, No. 2 Coke Battery, identified as CP2B0079, constructed in November 1975, with a maximum charging capacity of 217 tons per hour. Excessive coke oven gas back pressure is controlled by three (3) flares lit with internal flare igniters CP3060, CP3061 and CP3062, exhausting to Bypass/Bleeder Flare Stacks CP6105, CP6106 and CP6107.

(2) The No. 2 Coke Battery underfiring system has a maximum combustion heat input capacity of 250 MMBtu per hour, exhausting to stack CP6040 equipped with a continuous opacity monitor (COM).

(3) The No. 2 Coke Battery has a maximum pushing capacity of 161 tons of coke per hour, with particulate emissions controlled by a Mobile Scrubber Car 9119, 9120, 9121 or 9122, identified as CP3034, exhausting to Stack CP6041.

(4) Nos. 2 and 3 Quench Towers identified as CP1Q0080 and CP2Q0081, constructed in 1975, with a maximum combined capacity of 322 tons of coke per hour, and No. 1 Quench Tower identified as CPQ0087 constructed in 1975 with a capacity of 322 tons of coke per hour, each equipped with a quench water header and baffle system with sprays. Nos. 2 and 3 Quench Towers service No. 2 Coke Battery. No. 1 Quench Tower services Nos. 2, 5 and 7 Coke Batteries.

(5) The No. 2 Coke Battery fugitive emissions are generated from charging operations, off take piping, door leaks, lid leaks and collector main leaks.

(b) No. 5 Coke Battery

(1) One (1) three (3) meter short vertical flue coke oven battery with 77 ovens, No. 5 Coke Battery, identified as CP5B0090, constructed in 1954, with a maximum charging capacity of 84 tons per hour. Excessive coke oven gas back pressure is controlled by two (2) flares lit with internal flare igniters CP3066 and CP3067, exhausting to Bypass/Bleeder Flare stacks CP6111 and CP 6112.

(2) The No. 5 Coke Battery underfiring system has a maximum combustion heat input capacity of 125 MMBtu per hour, exhausting to stack CP6049, equipped with a COM.

(3) The No. 5 and No. 7 Coke Batteries have a combined maximum pushing capacity of 103 tons of coke per hour, with particulate emissions controlled by a common baghouse, identified as CP3041, exhausting to stack CP6050.

(4) No. 6 Quench Tower identified as CP5Q0095, constructed in 1954, with a maximum capacity of 103 tons of coke per hour, equipped with a quench water header and baffle system with sprays. This tower services Nos. 5 and 7 Coke Batteries.

(5) The No. 5 Coke Battery fugitive emissions are generated from charging operations, offtake piping, door leaks, lid leaks and collector main leaks.

(d) No. 7 Coke Battery

(1) One (1) three (3) meter short vertical flue coke oven battery, with 77 ovens, No. 7 Coke Battery, identified as CP7B0094, constructed in 1954, with a maximum charging capacity of 84 tons per hour. Excessive coke oven gas back pressure is controlled by two (2) flares lit with internal flare igniters CP3068 and CP3069, exhausting to Bypass/Bleeder Flare stacks CP6113 and CP6114.

(2) The No. 7 Coke Battery underfiring system has a maximum combustion heat input capacity of 125 MMBtu per hour, exhausting to stack CP6053 equipped with a COM.

(3) The No. 5 and No. 7 Coke Batteries have a combined maximum pushing capacity of 103 tons of coke per hour, with particulate emissions controlled by a common baghouse, identified as CP3041, exhausting to stack CP6050.

(4) No. 6 Quench Tower identified as CP5Q0095, constructed in 1954, with a maximum capacity of 103 tons of coke per hour, equipped with a quench water header and baffle system with sprays. This tower service Nos. 5 and 7 Coke Batteries.

(5) The No. 7 Coke Battery fugitive emissions are generated from charging operations, offtake piping, door leaks, lids leaks and collector main leaks.

(e) Natural Gas Underfiring Injection System Jets
Three (3) natural gas injection jets, identified as CPNGI001, CPNGI002 and CPNGI003, constructed in 2001, with heat input capacities of 22 MMBtu per hour, 43 MMBtu per hour and 122 MMBtu per hour, respectively. Natural gas injection provides Btu stabilization control, coke oven gas quality control and emergency gas supply to the battery underfiring system.

(The information describing the process contained in this facility description box is descriptive information and does not constitute enforceable conditions.)

National Emission Standards (NESHAP) Requirements

F.7.1 National Emissions Standards for Hazardous Air Pollutants for Coke Oven Batteries [40 CFR Part 63, Subpart L] [326 IAC 20-3]

Pursuant to 40 CFR Part 63, Subpart L, the Permittee shall comply with the provisions of the National Emissions Standards for Hazardous Air Pollutants for Coke Oven Batteries (included as Attachment H of this permit), which are incorporated by reference as 326 IAC 20-3, as specified as follows:

(1) 40 CFR 63.300(a)(5)
(2) 40 CFR 63.301
(3) 40 CFR 63.304(b)(2),(3)
(4) 40 CFR 63.306
(5) 40 CFR 63.307(a)(1),(2), (b)(1) through (4), (c)
(6) 40 CFR 63.308
(7) 40 CFR 63.309
(8) 40 CFR 63.310
(9) 40 CFR 63.311
(10) 40 CFR 63.313

SECTION F.8 FACILITY OPERATION CONDITIONS - NESHAP, SUBPART CCCCC

Emissions Unit Description: The Coke Battery Operations

(a) No. 2 Coke Battery

(1) One (1) six (6) meter tall vertical flue coke battery with 57 ovens, No. 2 Coke Battery, identified as CP2B0079, constructed in November 1975, with a maximum charging capacity of 217 tons per hour. Excessive coke oven gas back pressure is controlled by three (3) flares lit with internal flare igniters CP3060, CP3061 and CP3062, exhausting to Bypass/Bleeder Flare Stacks CP6105, CP6106 and CP6107.

(2) The No. 2 Coke Battery underfiring system has a maximum combustion heat input capacity of 250 MMBtu per hour, exhausting to stack CP6040 equipped with a continuous opacity monitor (COM).

(3) The No. 2 Coke Battery has a maximum pushing capacity of 161 tons of coke per hour, with particulate emissions controlled by a Mobile Scrubber Car 9119, 9120, 9121 or 9122, identified as CP3034, exhausting to Stack CP6041.

(4) Nos. 2 and 3 Quench Towers identified as CP1Q0080 and CP2Q0081, constructed in 1975, with a maximum combined capacity of 322 tons of coke per hour, and No. 1 Quench Tower identified as CPQ0087 constructed in 1975 with a capacity of 322 tons of coke per hour, each equipped with a quench water header and baffle system with sprays. Nos. 2 and 3 Quench Towers service No. 2 Coke Battery. No. 1 Quench Tower services Nos. 2, 5 and 7 Coke Batteries.

(5) The No. 2 Coke Battery fugitive emissions are generated from charging operations, off take piping, door leaks, lid leaks and collector main leaks.

(b) No. 5 Coke Battery

(1) One (1) three (3) meter short vertical flue coke oven battery with 77 ovens, No. 5 Coke Battery, identified as CP5B0090, constructed in 1954, with a maximum charging capacity of 84 tons per hour. Excessive coke oven gas back pressure is controlled by two (2) flares lit with internal flare igniters CP3066 and CP3067, exhausting to Bypass/Bleeder Flare stacks CP6111 and CP 6112.

(2) The No. 5 Coke Battery underfiring system has a maximum combustion heat input capacity of 125 MMBtu per hour, exhausting to stack CP6049, equipped with a COM.

(3) The No. 5 and No. 7 Coke Batteries have a combined maximum pushing capacity of 103 tons of coke per hour, with particulate emissions controlled by a common baghouse, identified as CP3041, exhausting to stack CP6050.

(4) No. 6 Quench Tower identified as CP5Q0095, constructed in 1954, with a maximum capacity of 103 tons of coke per hour, equipped with a quench water header and baffle system with sprays. This tower services Nos. 5 and 7 Coke Batteries.

(5) The No. 5 Coke Battery fugitive emissions are generated from charging operations, offtake piping, door leaks, lid leaks and collector main leaks.

(d) No. 7 Coke Battery

(1) One (1) three (3) meter short vertical flue coke oven battery, with 77 ovens, No. 7 Coke Battery, identified as CP7B0094, constructed in 1954, with a maximum charging capacity of 84 tons per hour. Excessive coke oven gas back pressure is controlled by two (2) flares lit with internal flare igniters CP3068 and CP3069, exhausting to Bypass/Bleeder Flare stacks CP6113 and CP6114.

(2) The No. 7 Coke Battery underfiring system has a maximum combustion heat input capacity of 125 MMBtu per hour, exhausting to stack CP6053 equipped with a COM.

(3) The No. 5 and No. 7 Coke Batteries have a combined maximum pushing capacity of 103 tons of coke per hour, with particulate emissions controlled by a common baghouse, identified as CP3041, exhausting to stack CP6050.

(4) Nos. 5 and 6 Quench Towers identified as CP5Q0091 and CP5Q0095, constructed in 1954, with a maximum combined capacity of 103 tons of coke per hour, equipped with a quench water header and baffle system with sprays. These towers service Nos. 5 and 7 Coke Batteries.

(5) The No. 7 Coke Battery fugitive emissions are generated from charging operations, offtake piping, door leaks, lids leaks and collector main leaks.

(e) Natural Gas Underfiring Injection System Jets
Three (3) natural gas injection jets, identified as CPNGI001, CPNGI002 and CPNGI003, constructed in 2001, with heat input capacities of 22 MMBtu per hour, 43 MMBtu per hour and 122 MMBtu per hour, respectively. Natural gas injection provides Btu stabilization control, coke oven gas quality control and emergency gas supply to the battery underfiring system.

(The information describing the process contained in this facility description box is descriptive information and does not constitute enforceable conditions.)

National Emissions Standards for Hazardous Air Pollutants

F.8.1 General Provisions Relating to NESHAP [326 IAC 20-1] [40 CFR Part 63, Subpart A]

The Permittee shall comply with the provisions of 40 CFR Part 63, Subpart A – General Provisions, which are incorporated by reference as 326 IAC 20-1-1, except when otherwise specified in 40 CFR Part 63, Subpart, CCCCC.

F.8.2 National Emissions Standards for Hazardous Air Pollutants for Coke Ovens: Pushing, Quenching, and Battery Stacks [40 CFR Part 63, Subpart CCCCC] [326 IAC 20-74]

Pursuant to 40 CFR Part 63, Subpart CCCCC, the Permittee shall comply with the provisions of this NESHAP (included as Attachment I of this permit), which are incorporated by reference as 326 IAC 20-74, as specified as follows:

(1) 40 CFR 63.7280
(2) 40 CFR 63.7281
(3) 40 CFR 63.7282(a), (b), (c)
(4) 40 CFR 63.7283(a), (d)
(5) 40 CFR 63.7290(a)(3)
(6) 40 CFR 63.7291
(7) 40 CFR 63.7293
(8) 40 CFR 63.7294
(9) 40 CFR 63.7295
(10) 40 CFR 63.7296
(11) 40 CFR 63.7300
(12) 40 CFR 63.7310

(13) 40 CFR 63.7321
(14) 40 CFR 63.7323
(17) 40 CFR 63.7330
(18) 40 CFR 63.7331
(19) 40 CFR 63.7332
(20) 40 CFR 63.7333
(21) 40 CFR 63.7334
(22) 40 CFR 63.7335
(23) 40 CFR 63.7336
(24) 40 CFR 63.7340(a), (b
(25) 40 CFR 63.7341
(26) 40 CFR 63.7342
(27) 40 CFR 63.7343
(28) 40 CFR 63.7350
(29) 40 CFR 63.7351
(30) 40 CFR 63.7352
(31) Table 1 to Subpart CCCCC of Part 63

SECTION F.9 FACILITY OPERATION CONDITIONS - NESHAP, SUBPART FFFFF

Emissions Unit Description:

Number 3 Sinter Plant

(a) Three (3) Sinter Strands, constructed in 1958 , identified as ISS10379, ISS20380 and ISS30381, each with 50 MMBtu per hour reheat burners combusting natural gas and coke oven gas identified as ISB001, ISB002 and ISB003 and a maximum capacity of 225 tons of sinter per hour each, each with ignition hood burners with a combined heat input of 50 MMBtu/hr combusting natural gas and coke oven gas, controlled by two (2) Windbox Gas Cleaning Systems IS3203 and IS3204, installed in 1996, each comprised of a Quench Reactor, Dry Venturi Scrubber, a baghouse operated in series, exhausting to Windbox stacks IS6198 and IS6199 which are equipped with VOC CEMS.

(b) One (1) Cold Screen Station, identified as ISR00389, constructed in 1958, with a maximum capacity of 450 tons per hour, using a Baghouse IS3209 as a control device and exhausting to stack IS6207.

(c) One (1) S1/S2 Conveyer System, identified as ISY00388, constructed in 1979, with a maximum capacity of 450 tons per hour, that transfers sinter from the sinter coolers to the cold screening station, using a baghouse IS3208 as a control device and exhausting to stack IS6206.

(d) Three (3) Sinter Coolers, identified as ISC10385, ISC20386, and ISC30387, constructed in 1958, with a maximum capacity of 225 ton per hour each, with emissions exhausting to stacks IS6203, IS6204, and IS6205 respectively.

(e) Three (3) Sinter Strand Discharge End Areas, identified as ISS10379, ISS20380 and ISS0381, constructed in 1958, using three (3) baghouses as control devices, designated as IS3205, IS3206, and IS3207, exhausting to stacks IS6200, IS6201, and IS6202 respectively.

Blast Furnaces

(d) No. 4 Blast Furnace, constructed in 1917, with a maximum capacity of 200 tons per hour, identified as IABF0308, using a Blast Furnace Gas Distribution System to collect the blast furnace gas and using natural gas injection and pulverized coal at a rate of 26 tons per hour, oil (from on-site contractor when it meets specifications) at a rate of 70 gallons per minute and/or coal tar (when the on-site contractor tar centrifuge is not operating) at a rate of 70 gallons per minute.

(1) Three (3) No. 4 Blast Furnace Stoves identified as IAST0360, replaced in 1947, with a maximum heat input capacity of 350 MMBtu per hour total combusting blast furnace gas (BFG) and natural gas, exhausting to the combustion stack IA6160.

(2) No. 4 Blast Furnace Casthouse, identified as IABF0308, constructed in 1917, with emissions from tapping and runners controlled by a natural gas iron oxide fume suppression system IA3177, exhausting to casthouse roof monitor IA6010.

(e) No. 6 Blast Furnace, constructed in 1910, with a maximum capacity of 200 tons per hour, identified as IABFO341, using a Blast Furnace Gas Distribution System to collect the blast furnace gas and using natural gas injection and pulverized coal injected at a rate of 26 tons per hour, oil at a rate of 70 gallons per minute and /or coal tar at a rate of 70 gallons per minute..

(1) Four (4) No. 6 Blast Furnace Stoves identified as IBST0361, replaced in 1997, with a maximum heat input capacity of 350 MMBtu per hour total, combusting Blast Furnace Gas (BFG) and natural gas exhausting to the combustion stack IB6168.

(2) No. 6 Blast Furnace Casthouse, identified as IBBF0341, constructed in 1910, with emissions from tapping and runners controlled by a natural gas iron oxide fume suppression system IB3178, exhausting to casthouse roof monitor IB6011.

(f) No. 8 Blast Furnace, constructed in 1909, with a maximum capacity of 183 tons per hour, identified as ICBFO354, using a Blast Furnace Gas Distribution System to collect the blast furnace gas and using natural gas injection and pulverized coal injected at a rate of 26 ton per hour, oil at a rate of 70 gallons per minute and/or coal tar at a rate of 70 gallons per minute.

(1) No. 8 Blast Furnace Casthouse, identified as ICBF0354, constructed in 1909, with emissions from tapping and runners controlled by a natural gas iron oxide fume suppression system IC3179, exhausting to cast house roof monitor IC6012.

(g) No. 14 Blast Furnace, constructed in 1974, with a maximum capacity of 450 tons per hour, identified as IDBF0369, using a Blast Furnace Gas Distribution System to collect the blast furnace gas and using natural gas injection and pulverized coal injected at a rate of 80 tons per hour, oil at a rate of 150 gallons per minute and/or coal tar at a rate of 150 gallons per minute.

(h) No. 14 Blast Furnace Casthouse, identified as IDBF0369, constructed in 1974 with emissions controlled by a baghouse, identified as ID3185, exhausting to stack ID6187 and fugitive emissions exhausting through the casthouse roof monitor ID6013;

Number One Basic Oxygen Process (BOP) Shop

(a) Two (2) Stations, identified as No. 1 and No. 2, Hot Metal Transfer and Desulfurization Stations. The Desulfurization Stations were originally constructed in 1981 and the Hot Metal Transfer Stations were originally constructed in 1965, and replaced in 1998. Each station consists of Hot Metal Desulfurization, SSDS0201, Hot Metal Transfer SSMT0203 and Slag Skimming SSSS0205. Hot metal from the blast furnaces is desulfurized and skimmed prior to charging in the steel making vessels. The maximum capacity of each station is 456 tons per hour. Each station is equipped with a local exhaust ventilation hood to capture emissions ducted to the Hot Metal Desulfurization/Skimming Stations Baghouse SS3100. The desulfurization units are equipped with nitrogen suppression around where the desulfurization lance penetrates the hood hole.

(c) Basic Oxygen Process (BOP) Vessels, constructed in 1965, consisting of BOP vessel M, identified as SSVM0234, vessel E, identified as SSVE0235 and vessel D, identified as SSVD0236, with a maximum capacity of 250 tons per hour each. Emissions are controlled by open combustion hoods and an exhaust emission hood collection system, which exhausts emissions to the Gas Cleaning Systems SS3103 and SS3104.

(j) One emergency slag skimming station with a maximum capacity of 456 tons per hour with emissions ducted to the Hot Metal Transfer Station and Desulfurization/Skimming Stations Baghouse SS3100.

Number Two Q-BOP Shop

(a) Two (2) Hot Metal Transfer and Desulfurization Stations, identified as NSDS0246, constructed in 1987, with a maximum capacity of 510 tons per hour. These stations included: two (2) Hot Metal Mixers, identified as NSMM0264 and two (2) Hot Metal Mixer Heaters, identified as NSMH0251, constructed in 1973, with a maximum capacity of 255 tons per hour. The natural gas fired mixer heaters have a heat input capacity of 10 MMBtu/hr each. Emissions from the hot metal transfer and desulfurization stations, mixers and heaters are controlled by the Hot Metal Transfer and Desulfurization Stations Baghouse NS3115, discharging through NS6144 and the uncontrolled emissions go through roof monitor NS6631.

(b) Q-Basic Oxygen Process (BOP) vessels, constructed in 1973, consisting of BOP vessel T identified as NSVT0268, vessel W, identified as NSVW0269, and vessel Y, identified as NSVY0270, with a maximum capacity of 250 tons per hour each. Primary emissions are controlled by open combustion hood and two (2) Gas Cleaning Systems, secondary emissions are controlled by the Secondary Emissions Baghouse NS3124, exhausting to stack NS6123, and uncontrolled emissions exhaust through Roof Monitor NS6632.

(e) Three (3) Ladle Metallurgical Facilities, LMF1 identified as NSL10293, LMF 2 identified as NSL20294 were constructed in 1986 and LMF 3 identified as NSL30295, constructed in 1991 with a maximum capacity of 348 tons per hour each. Hot fume emissions from LMF 1 and 2 are controlled by Nos. 1 and 2 LMF Hot Fume Exhaust baghouses NS3135 and NS3136, exhausting through stacks NS6146 and NS6147. Material handling emissions at LMF 1 and 2 are controlled by the LMF Nos. 1 and 2 Material Handling baghouse NS3052, exhausting through stack NS6055. The LMF 3 Hot Fume Exhaust and Material Handling emissions are controlled by the LMF 3 Hot Fume and Material Handling Baghouse NS3137, exhausting to stack NS6148. All uncontrolled emissions exhaust through the roof monitor NS6634.

(f) One (1) Capped Argon Bubble (CAB) Station, approved in 2014 for construction, identified as NSC40296, with a maximum capacity of 477,000 tons per year, using the No. 3 LMF Hot Fume and Material Handling Baghouse NS3137 as control, and exhausting to stack NS6148. All uncontrolled emissions exhaust through the roof monitor NS6634.

(The information describing the process contained in this facility description box is descriptive information and does not constitute enforceable conditions)

National Emissions Standards for Hazardous Air Pollutants

F.9.1 General Provisions Relating to NESHAP [326 IAC 20-1] [40 CFR Part 63, Subpart A]

The Permittee shall comply with the provisions of 40 CFR Part 63, Subpart A – General Provisions, which are incorporated by reference as 326 IAC 20-1-1, except when otherwise specified in 40 CFR Part 63, Subpart FFFFF.

F.9.2 National Emissions Standards for Hazardous Air Pollutants for Integrated Iron and Steel Manufacturing Facilities [40 CFR Part 63, Subpart FFFFF] [326 IAC 20-93]

Pursuant to 40 CFR Part 63, Subpart FFFFF, the Permittee shall comply with the provisions of this NESHAP (included as Attachment J of this permit), which are incorporated by reference as 326 IAC 20-93, as specified as follows:

(1) 40 CFR 63.7780
(2) 40 CFR 63.7781
(3) 40 CFR 63.7782(a), (b), (c), (d)
(4) 40 CFR 63.7783(a), (e)
(5) 40 CFR 63.7790
(6) 40 CFR 63.7800
(7) 40 CFR 63.7810
(8) 40 CFR 63.7820
(9) 40 CFR 63.7821
(10) 40 CFR 63.7822
(11) 40 CFR 63.7823
(12) 40 CFR 63.7824
(13) 40 CFR 63.7825
(14) 40 CFR 63.7826
(15) 40 CFR 63.7830
(16) 40 CFR 63.7831
(17) 40 CFR 63.7832

(18) 40 CFR 63.7833
(19) 40 CFR 63.7834
(20) 40 CFR 63.7835
(21) 40 CFR 63.7840
(22) 40 CFR 63.7841
(23) 40 CFR 63.7842
(24) 40 CFR 63.7843
(25) 40 CFR 63.7850
(26) 40 CFR 63.7851
(27) 40 CFR 63.7852
(28) Table 1 to Subpart FFFFF of Part 63—Emission and Opacity Limits (applicable sections)
(29) Table 3 to Subpart FFFFF of Part 63—Continuous Compliance with Emission and Opacity Limits (applicable sections)
(30) Table 4 to Subpart FFFFF of Part 63—Applicability of General Provisions to Subpart FFFFF (applicable sections)

SECTION F.10 FACILITY OPERATION CONDITIONS - NESHAP, SUBPART CCC

Emissions Unit Description:
Continuous Pickling Lines

(a) One (1) 84-inch Pickle Line, the North Continuous Pickle Line, identified as HWPO0625, constructed in 1968, with a maximum capacity of 314 tons per hour consisting of four (4) pickle tanks and two (2) rinse tanks (hot and cold). Emissions at this pickle line are controlled by a fume exhaust scrubber, HW3545 exhausting to stack HW6525.

(b) One (1) 80-inch Pickle Line, the South Continuous Pickle Line, identified as HMPO0589, constructed in 1948, with a maximum capacity of 91 tons per hour, consisting of three (3) pickle tanks and two (2) rinse tanks (hot and cold). Emissions are controlled by a fume exhaust scrubber, HM3540, exhausting to stack HM6520

(c) Electro-galvanizing Line (EGL) (pickle section)

(1) One (1) Electro-galvanizing Line (EGL), with one HCl pickle tank, No. 1 Pickle tank, identified as HET20685, a cleaner section, a plating section and associated scrubber, with a maximum capacity of 60.5 tons per hour. Fumes from the Pickle Section are controlled by a fume scrubber HE3583 exhausting through stack HE6563. The single sided process for this coating line was constructed in 1977 and was modified in 1993 to a double sided process for coating.

(The information describing the process contained in this facility description box is descriptive information and does not constitute enforceable conditions.)

National Emissions Standards for Hazardous Air Pollutants

F.10.1 General Provisions Relating to NESHAP [326 IAC 20-1] [40 CFR Part 63, Subpart A]

The Permittee shall comply with the provisions of 40 CFR Part 63, Subpart A – General Provisions, which are incorporated by reference as 326 IAC 20-1-1, except when otherwise specified in 40 CFR Part 63, Subpart CCC.

F.10.2 National Emissions Standards for Hazardous Air Pollutants for Steel Pickling—HCl Process Facilities and Hydrochloric Acid Regeneration Plants [40 CFR Part 63, Subpart CCC] [326 IAC 20-29]

Pursuant to 40 CFR Part 63, Subpart CCC, the Permittee shall comply with the provisions of this NESHAP (included as Attachment K of this permit), which are incorporated by reference as 326 IAC 20-29, as specified as follows:

(1) 40 CFR 63.1155
(2) 40 CFR 63.1156
(3) 40 CFR 63.1157
(4) 40 CFR 63.1158
(5) 40 CFR 63.1159
(6) 40 CFR 63.1160(a)(1), (b)
(7) 40 CFR 63.1161
(8) 40 CFR 63.1162(a), (c)
(9) 40 CFR 63.1163(a)(2), (d), (e)
(10) 40 CFR 63.1164
(11) 40 CFR 63.1165
(12) 40 CFR 63.1166
(13) Table 1 to Subpart CCC of Part 63—Applicability of General Provisions (40 CFR Part 63, Subpart A) to Subpart CCC

SECTION F.11 FACILITY OPERATION CONDITIONS - NESHAP, SUBPART L

Emissions Unit Description:

Coke Plant By-Product Recovery Plant -

(a) Control Station No. 1

(1) Four (4) Predecanters D-101A, D-101B, D-101C and D-101D, identified as CBP10100, CBP20101, CBP30102 and CBP30103, constructed in 1975, with vapors directed by a natural gas blanketing system CB3080 to Control Station No. 1 and into the 72- inch Suction Main.

(2) Two (2) Still Decanters D-102B and D-102A, identified as CBD00104 and CBD00105, constructed in 1975, with vapors directed by a natural gas blanketing system CB3080 to Control Station No. 1 and into the 72-inch Suction Main.

(3) Two (2) Gary Decanters D-5 and D-4, identified as CBD20107 and CBD30108, constructed in 1975 with vapors directed by a natural gas blanket system CB3080 to Control Station No. 1 and into the 72-inch Suction Main.

(4) One (1) Bleed-Off Tank B101, identified as CBB10106, constructed in 1975, with vapors directed by a natural gas blanketing system CB3080 to Control Station No. 1 and into the 72 inch Suction Main.

(5) One (1) Liquor Storage Tank T-7, identified as CBL10109, constructed in 1975, with vapors directed by a natural gas blanketing system CB3080 to Control Station No. 1 into the 72-inch Suction Main.

(6) Two (2) Tar Storage Tanks T-2 and T-3, identified as CBT00110 and CBT00111, constructed in 1968 with vapors, directed by a natural gas blanketing system CB3080 to Control Station No. 1 and into the 72-inch Suction Main.

(7) One (1) Storage Tank T-6, identified as CBT20112, constructed in 1968, with vapors, directed by a natural gas blanketing system CB3080 to Control Station No. 1 and into the 72-inch Suction Main.

(8) Two (2) PC Tar Storage Tanks T-363D and T-363A, identified as CBT30113 and CB40114, constructed in 1975, with vapors directed by a natural gas blanketing system CB3080 to Control Station No. 1 into the 72-inch Suction Main.

(9) One (1) Dry Tar Storage Tank T-9, identified as CBT50115, constructed in 1975, with vapors directed by a natural gas blanketing system CB3080 to Control Station No. 1 and into the 72 inch Suction Main.

(10) One (1) Sump S-9 serving Dry Tar Storage Tank ST-9, identified as CBS10116, constructed in 1991, with vapors, directed by a natural gas blanketing system CB3080 to Control Station No. 1 and into the 72-inch Suction Main.

(b) Control Station No. 2

(1) Three (3) Tar Tanks T-304C, T-304B and T-304A , identified as CBT60118, CBT70119, and CBT80121, constructed in 1990, 1953 and 1953, respectively,

with vapors directed by a natural gas blanketing system CB3081 to Control Station No. 2 and into the 72-inch Suction Main.

(2) One (1) Tar Feed Tank T-306C, identified as CBTF0164, constructed in 1953, with vapors directed by a natural gas blanketing system CB3081 to Control Station No. 2 and into the 72 inch Suction Main.

(3) One (1) Wash Oil Tank T-331AN, identified as CBO10123, constructed in 1961, with vapors directed by a natural gas blanketing system CB3081 to Control Station No. 2 into the 72-inch Suction Main.

(4) Two (2) Light Oil Storage Tanks T-312 and T-311, identified as CBO20124 and CBO30125, constructed in 1953 with vapors directed by a natural gas blanketing system CB3081 to Control Station No. 2 and into the 72-inch Suction Main.

(5) One (1) sump S-304/306, constructed in 1996, with vapors directed by a natural gas blanketing system CB3081 to Control Station No. 2 and into the 72-inch Suction Main.

(c) Control Station No. 3

(1) Four (4) Predecanters D-105A, D-105B, D-105C and D-105D, identified as CBP70137, CBP80138, CBP50139 and CBP60140, constructed in 1976, with vapors directed by a natural gas blanketing system CB3082 to Control Station No. 3 and into the 72-inch Suction Main.

(2) Two (2) Still Decanters D-106A and D-106B, identified as CBD60134 and CBD70136, constructed in 1976, with vapors directed by a natural gas blanketing system CB3082 to Control Station No. 3 and into the 72-inch Suction Main.

(3) Two (2) Gary Decanters D-6 and D-7, identified as CBD40132 and CBD50133, constructed in 1976, with vapors directed by a natural gas blanketing system CB3082 to Control Station No. 3 and into the 72-inch Suction Main.

(4) Two (2) Tar Decanters D-5/7N and D-5/7S, identified as CBD80141 and CBD90142, constructed in 1953, with vapors directed by a natural gas blanketing system CB3082 to Control Station No. 3 and into the 72-inch Suction Main.

(5) One (1) Bleed-Off Tank B-104, identified as CBB20135, constructed in 1976 with vapors directed by a natural gas blanketing system CB3082 to Control Station No. 3 and into the 72-inch Suction Main.

(6) One (1) Liquor Surge Tank T-11, identified as CBL60131, constructed in 1975, with vapors directed by a natural gas blanketing system CB3082 to Control Station No. 3 and into the 72-inch Suction Main.

(4) Control Station No. 4

(1) Four (4) Circulating Liquor Decanters L-100B, L-100C, L-100D and L-100E, identified as CBC30127, CBC40128, CBC50129 and CBL80145, constructed in 1975, with vapors directed by a natural gas blanketing system CB3083 to Control Station No. 4 and into the 72-inch Suction Main.

(2) Two (2) Liquor Surge Tanks T-340A and T-340B, identified as CBC20126 and CBL70143, constructed in 1995, with vapors directed by a natural gas blanketing system CB3083 to Control Station No. 4 and into the 72-inch Suction Main.

(3) One (1) Primary Cooler Tank T-345A, identified as CBTF0130, constructed in 1995 with vapors directed by a natural gas blanketing system CB3083 to Control Station No. 4 and into the 72-inch Suction Main.

(5) Control Station No. 5

(1) One (1) Sump of Circulating Liquor Ls-100E, identified as CBS40144, constructed in 1991, with vapors directed by a natural gas blanketing system CB3051 to Control Station No. 5 and into the 72-inch Suction Main.

(2) Three (3) Tar Storage Tanks T-301,T-302A, T-302B, identified as CBTA0146, CBTB0147 and CBTC0148, constructed in 1948, 1930, and 1930, respectively, with vapors directed by a natural gas blanketing system CB3051 to Control Station No. 5 and into the 72-inch Suction Main.

(3) Two (2) Storage Tanks T-7100, T7110 and T-7120, constructed and refurbished in 1997, with vapors directed by a natural gas blanketing system CB3051 to Control Station No. 5 and into the 72-inch Suction Main.

(4) Two (2) Oil/Tar Separator Tanks, T-7000 and T-7010, constructed in 1997, with vapors directed by a natural gas blanketing system CB3051 to Control Station No. 5 and into the 72-inch Suction Main.

(5) Two (2) Oil and Tar Receiver Tanks, T-7020 and T-7030, constructed in 1997 with vapors directed by a natural gas blanketing system CB3051 to Control Station No. 5 and into the 72-inch Suction Main.

(6) One (1) Surge Tank T-7800, constructed in 1997, with vapors directed to a nitrogen gas blanketing system.

(7) Distillation Sump Emission Control

One (1) Distillation Sump Emission Control System, identified as CBS80151, constructed in 1989 with vapors directed to a nitrogen gas blanketing system.

(8) Coke Oven Gas (COG) High Pressure Control System, constructed in 1991, contains instrumentation and control valves designed to limit the maximum pressure in the COG distribution system. Excess COG pressure is directed to and combusted in a bleeder flare with emissions exhausting to Stack CG6077.

(9) Equipment in Benzene Service consist of several hundred components pumps, exhausters, valves, flanges and pressure relief devices in benzene service within the byproducts plant.

(The information describing the process contained in this facility description box is descriptive information and does not constitute enforceable conditions.)

National Emissions Standards for Hazardous Air Pollutants

F.11.1 General Provisions Relating to National Emission Standards for Hazardous Air Pollutants under 40 CFR 61 [326 IAC 14-1] [40 CFR Part 61, Subpart A]

The Permittee shall comply with the provisions of 40 CFR Part 61, Subpart A – General Provisions, which are incorporated by reference as 326 IAC 14, except when otherwise specified in 40 CFR Part 61, Subpart L.

F.11.2 National Emissions Standards for Benzene from Coke By-Products Recovery Plants [40 CFR 61, Subpart L] [326 IAC 14-9-1]

Pursuant to 40 CFR Part 61, Subpart L, the Permitteee shall comply with the provisions of this NESHAP (included as Attachment L of this permit), which are incorporated by reference as 326 IAC 14-9-1, as specified as follows:

(1) 40 CFR 61.130
(2) 40 CFR 61.131
(3) 40 CFR 61.132
(4) 40 CFR 61.133
(5) 40 CFR 61.134
(6) 40 CFR 61.135
(7) 40 CFR 61.136
(8) 40 CFR 61.137
(9) 40 CFR 61.138
(10) 40 CFR 61.139

SECTION F.12 FACILITY OPERATION CONDITIONS - NESHAP, SUBPART V

Emissions Unit Description:

Coke Plant By-Product Recovery Plant -

(a) Control Station No. 1

(1) Four (4) Predecanters D-101A, D-101B, D-101C and D-101D, identified as CBP10100, CBP20101, CBP30102 and CBP30103, constructed in 1975, with vapors directed by a natural gas blanketing system CB3080 to Control Station No. 1 and into the 72- inch Suction Main.

(2) Two (2) Still Decanters D-102B and D-102A, identified as CBD00104 and CBD00105, constructed in 1975, with vapors directed by a natural gas blanketing system CB3080 to Control Station No. 1 and into the 72-inch Suction Main.

(3) Two (2) Gary Decanters D-5 and D-4, identified as CBD20107 and CBD30108, constructed in 1975 with vapors directed by a natural gas blanket system CB3080 to Control Station No. 1 and into the 72-inch Suction Main.

(4) One (1) Bleed-Off Tank B101, identified as CBB10106, constructed in 1975, with vapors directed by a natural gas blanketing system CB3080 to Control Station No. 1 and into the 72 inch Suction Main.

(5) One (1) Liquor Storage Tank T-7, identified as CBL10109, constructed in 1975, with vapors directed by a natural gas blanketing system CB3080 to Control Station No. 1 into the 72-inch Suction Main.

(6) Two (2) Tar Storage Tanks T-2 and T-3, identified as CBT00110 and CBT00111, constructed in 1968 with vapors, directed by a natural gas blanketing system CB3080 to Control Station No. 1 and into the 72-inch Suction Main.

(7) One (1) Storage Tank T-6, identified as CBT20112, constructed in 1968, with vapors, directed by a natural gas blanketing system CB3080 to Control Station No. 1 and into the 72-inch Suction Main.

(8) Two (2) PC Tar Storage Tanks T-363D and T-363A, identified as CBT30113 and CB40114, constructed in 1975, with vapors directed by a natural gas blanketing system CB3080 to Control Station No. 1 into the 72-inch Suction Main.

(9) One (1) Dry Tar Storage Tank T-9, identified as CBT50115, constructed in 1975, with vapors directed by a natural gas blanketing system CB3080 to Control Station No. 1 and into the 72 inch Suction Main.

(10) One (1) Sump S-9 serving Dry Tar Storage Tank ST-9, identified as CBS10116, constructed in 1991, with vapors, directed by a natural gas blanketing system CB3080 to Control Station No. 1 and into the 72-inch Suction Main.

(b) Control Station No. 2

(1) Three (3) Tar Tanks T-304C, T-304B and T-304A , identified as CBT60118, CBT70119, and CBT80121, constructed in 1990, 1953 and 1953, respectively,

with vapors directed by a natural gas blanketing system CB3081 to Control Station No. 2 and into the 72-inch Suction Main.

(2) One (1) Tar Feed Tank T-306C, identified as CBTF0164, constructed in 1953, with vapors directed by a natural gas blanketing system CB3081 to Control Station No. 2 and into the 72 inch Suction Main.

(3) One (1) Wash Oil Tank T-331AN, identified as CBO10123, constructed in 1961, with vapors directed by a natural gas blanketing system CB3081 to Control Station No. 2 into the 72-inch Suction Main.

(4) Two (2) Light Oil Storage Tanks T-312 and T-311, identified as CBO20124 and CBO30125, constructed in 1953 with vapors directed by a natural gas blanketing system CB3081 to Control Station No. 2 and into the 72-inch Suction Main.

(5) One (1) sump S-304/306, constructed in 1996, with vapors directed by a natural gas blanketing system CB3081 to Control Station No. 2 and into the 72-inch Suction Main.

(c) Control Station No. 3

(1) Four (4) Predecanters D-105A, D-105B, D-105C and D-105D, identified as CBP70137, CBP80138, CBP50139 and CBP60140, constructed in 1976, with vapors directed by a natural gas blanketing system CB3082 to Control Station No. 3 and into the 72-inch Suction Main.

(2) Two (2) Still Decanters D-106A and D-106B, identified as CBD60134 and CBD70136, constructed in 1976, with vapors directed by a natural gas blanketing system CB3082 to Control Station No. 3 and into the 72-inch Suction Main.

(3) Two (2) Gary Decanters D-6 and D-7, identified as CBD40132 and CBD50133, constructed in 1976, with vapors directed by a natural gas blanketing system CB3082 to Control Station No. 3 and into the 72-inch Suction Main.

(4) Two (2) Tar Decanters D-5/7N and D-5/7S, identified as CBD80141 and CBD90142, constructed in 1953, with vapors directed by a natural gas blanketing system CB3082 to Control Station No. 3 and into the 72-inch Suction Main.

(5) One (1) Bleed-Off Tank B-104, identified as CBB20135, constructed in 1976 with vapors directed by a natural gas blanketing system CB3082 to Control Station No. 3 and into the 72-inch Suction Main.

(6) One (1) Liquor Surge Tank T-11, identified as CBL60131, constructed in 1975, with vapors directed by a natural gas blanketing system CB3082 to Control Station No. 3 and into the 72-inch Suction Main.

(d) Control Station No. 4

(1) Four (4) Circulating Liquor Decanters L-100B, L-100C, L-100D and L-100E, identified as CBC30127, CBC40128, CBC50129 and CBL80145, constructed in 1975, with vapors directed by a natural gas blanketing system CB3083 to Control Station No. 4 and into the 72-inch Suction Main.

(2) Two (2) Liquor Surge Tanks T-340A and T-340B, identified as CBC20126 and CBL70143, constructed in 1995, with vapors directed by a natural gas blanketing system CB3083 to Control Station No. 4 and into the 72-inch Suction Main.

(3) One (1) Primary Cooler Tank T-345A, identified as CBTF0130, constructed in 1995 with vapors directed by a natural gas blanketing system CB3083 to Control Station No. 4 and into the 72-inch Suction Main.

(e) Control Station No. 5

(1) One (1) Sump of Circulating Liquor Ls-100E, identified as CBS40144, constructed in 1991, with vapors directed by a natural gas blanketing system CB3051 to Control Station No. 5 and into the 72-inch Suction Main.

(2) Three (3) Tar Storage Tanks T-301,T-302A, T-302B, identified as CBTA0146, CBTB0147 and CBTC0148, constructed in 1948, 1930, and 1930, respectively, with vapors directed by a natural gas blanketing system CB3051 to Control Station No. 5 and into the 72-inch Suction Main.

(3) Two (2) Storage Tanks T-7100, T7110 and T-7120, constructed and refurbished in 1997, with vapors directed by a natural gas blanketing system CB3051 to Control Station No. 5 and into the 72-inch Suction Main.

(4) Two (2) Oil/Tar Separator Tanks, T-7000 and T-7010, constructed in 1997, with vapors directed by a natural gas blanketing system CB3051 to Control Station No. 5 and into the 72-inch Suction Main.

(5) Two (2) Oil and Tar Receiver Tanks, T-7020 and T-7030, constructed in 1997 with vapors directed by a natural gas blanketing system CB3051 to Control Station No. 5 and into the 72-inch Suction Main.

(6) One (1) Surge Tank T-7800, constructed in 1997, with vapors directed to a nitrogen gas blanketing system.

(7) Distillation Sump Emission Control

One (1) Distillation Sump Emission Control System, identified as CBS80151, constructed in 1989 with vapors directed to a nitrogen gas blanketing system.

(8) Coke Oven Gas (COG) High Pressure Control System, constructed in 1991, contains instrumentation and control valves designed to limit the maximum pressure in the COG distribution system. Excess COG pressure is directed to and combusted in a bleeder flare with emissions exhausting to Stack CG6077.

(9) Equipment in Benzene Service consist of several hundred components pumps, exhausters, valves, flanges and pressure relief devices in benzene service within the byproducts plant.

(The information describing the process contained in this facility description box is descriptive information and does not constitute enforceable conditions.)

National Emissions Standards for Hazardous Air Pollutants

F.12.1 General Provisions Relating to National Emission Standards for Hazardous Air Pollutants under 40 CFR Part 61 [326 IAC 14-1] [40 CFR Part 61, Subpart A]

Pursuant to 40 CFR Part 61, Subpart V, the Permitteee shall comply with the provisions of this NESHAP (included as Attachment M of this permit), which are incorporated by reference as 326 IAC 14-8, as specified as follows, except as required in 40 CFR Part 61, Subpart L:

F.12.2 National Emissions Standards for Equipment Leaks (Fugitive Emission Sources) [40 CFR 61, Subpart V] [326 IAC 14-8]

Pursuant to 40 CFR Part 61, Subpart V, the Permitteee shall comply with the provisions of this NESHAP (included as Attachment M of this permit), which are incorporated by reference as 326 IAC 14-8, as specified as follows, except as required in 40 CFR Part 61, Subpart L:

(1) 40 CFR 61.240
(2) 40 CFR 61.241
(3) 40 CFR 61.242-1
(4) 40 CFR 61.242-2
(5) 40 CFR 61.242-3
(6) 40 CFR 61.242-4
(7) 40 CFR 61.242-5
(8) 40 CFR 61.242-6
(9) 40 CFR 61.242-7
(10) 40 CFR 61.242-8
(11) 40 CFR 61.242-9
(12) 40 CFR 61.242-10
(13) 40 CFR 61.242-11

SECTION F.13 FACILITY OPERATION CONDITIONS - NESHAP, SUBPART FF

Emissions Unit Description:

Coke Plant By-Product Recovery Plant -

(a) Control Station No. 1

(1) Four (4) Predecanters D-101A, D-101B, D-101C and D-101D, identified as CBP10100, CBP20101, CBP30102 and CBP30103, constructed in 1975, with vapors directed by a natural gas blanketing system CB3080 to Control Station No. 1 and into the 72- inch Suction Main.

(2) Two (2) Still Decanters D-102B and D-102A, identified as CBD00104 and CBD00105, constructed in 1975, with vapors directed by a natural gas blanketing system CB3080 to Control Station No. 1 and into the 72-inch Suction Main.

(3) Two (2) Gary Decanters D-5 and D-4, identified as CBD20107 and CBD30108, constructed in 1975 with vapors directed by a natural gas blanket system CB3080 to Control Station No. 1 and into the 72-inch Suction Main.

(4) One (1) Bleed-Off Tank B101, identified as CBB10106, constructed in 1975, with vapors directed by a natural gas blanketing system CB3080 to Control Station No. 1 and into the 72 inch Suction Main.

(5) One (1) Liquor Storage Tank T-7, identified as CBL10109, constructed in 1975, with vapors directed by a natural gas blanketing system CB3080 to Control Station No. 1 into the 72-inch Suction Main.

(6) Two (2) Tar Storage Tanks T-2 and T-3, identified as CBT00110 and CBT00111, constructed in 1968 with vapors, directed by a natural gas blanketing system CB3080 to Control Station No. 1 and into the 72-inch Suction Main.

(7) One (1) Storage Tank T-6, identified as CBT20112, constructed in 1968, with vapors, directed by a natural gas blanketing system CB3080 to Control Station No. 1 and into the 72-inch Suction Main.

(8) Two (2) PC Tar Storage Tanks T-363D and T-363A, identified as CBT30113 and CB40114, constructed in 1975, with vapors directed by a natural gas blanketing system CB3080 to Control Station No. 1 into the 72-inch Suction Main.

(9) One (1) Dry Tar Storage Tank T-9, identified as CBT50115, constructed in 1975, with vapors directed by a natural gas blanketing system CB3080 to Control Station No. 1 and into the 72 inch Suction Main.

(10) One (1) Sump S-9 serving Dry Tar Storage Tank ST-9, identified as CBS10116, constructed in 1991, with vapors, directed by a natural gas blanketing system CB3080 to Control Station No. 1 and into the 72-inch Suction Main.

(b) Control Station No. 2

(1) Three (3) Tar Tanks T-304C, T-304B and T-304A , identified as CBT60118, CBT70119, and CBT80121, constructed in 1990, 1953 and 1953, respectively, with vapors directed by a natural gas blanketing system CB3081 to Control Station No. 2 and into the 72-inch Suction Main.

(2) One (1) Tar Feed Tank T-306C, identified as CBTF0164, constructed in 1953, with vapors directed by a natural gas blanketing system CB3081 to Control Station No. 2 and into the 72 inch Suction Main.

(3) One (1) Wash Oil Tank T-331AN, identified as CBO10123, constructed in 1961, with vapors directed by a natural gas blanketing system CB3081 to Control Station No. 2 into the 72-inch Suction Main.

(4) Two (2) Light Oil Storage Tanks T-312 and T-311, identified as CBO20124 and CBO30125, constructed in 1953 with vapors directed by a natural gas blanketing system CB3081 to Control Station No. 2 and into the 72-inch Suction Main.

(5) One (1) sump S-304/306, constructed in 1996, with vapors directed by a natural gas blanketing system CB3081 to Control Station No. 2 and into the 72-inch Suction Main.

(c) Control Station No. 3

(1) Four (4) Predecanters D-105A, D-105B, D-105C and D-105D, identified as CBP70137, CBP80138, CBP50139 and CBP60140, constructed in 1976, with vapors directed by a natural gas blanketing system CB3082 to Control Station No. 3 and into the 72-inch Suction Main.

(2) Two (2) Still Decanters D-106A and D-106B, identified as CBD60134 and CBD70136, constructed in 1976, with vapors directed by a natural gas blanketing system CB3082 to Control Station No. 3 and into the 72-inch Suction Main.

(3) Two (2) Gary Decanters D-6 and D-7, identified as CBD40132 and CBD50133, constructed in 1976, with vapors directed by a natural gas blanketing system CB3082 to Control Station No. 3 and into the 72-inch Suction Main.

(4) Two (2) Tar Decanters D-5/7N and D-5/7S, identified as CBD80141 and CBD90142, constructed in 1953, with vapors directed by a natural gas blanketing system CB3082 to Control Station No. 3 and into the 72-inch Suction Main.

(5) One (1) Bleed-Off Tank B-104, identified as CBB20135, constructed in 1976 with vapors directed by a natural gas blanketing system CB3082 to Control Station No. 3 and into the 72-inch Suction Main.

(6) One (1) Liquor Surge Tank T-11, identified as CBL60131, constructed in 1975, with vapors directed by a natural gas blanketing system CB3082 to Control Station No. 3 and into the 72-inch Suction Main.

(d) Control Station No. 4

(1) Four (4) Circulating Liquor Decanters L-100B, L-100C, L-100D and L-100E, identified as CBC30127, CBC40128, CBC50129 and CBL80145, constructed in 1975, with vapors directed by a natural gas blanketing system CB3083 to Control Station No. 4 and into the 72-inch Suction Main.

(2) Two (2) Liquor Surge Tanks T-340A and T-340B, identified as CBC20126 and CBL70143, constructed in 1995, with vapors directed by a natural gas blanketing system CB3083 to Control Station No. 4 and into the 72-inch Suction Main.

(3) One (1) Primary Cooler Tank T-345A, identified as CBTF0130, constructed in 1995 with vapors directed by a natural gas blanketing system CB3083 to Control Station No. 4 and into the 72-inch Suction Main.

(e) Control Station No. 5

(1) One (1) Sump of Circulating Liquor Ls-100E, identified as CBS40144, constructed in 1991, with vapors directed by a natural gas blanketing system CB3051 to Control Station No. 5 and into the 72-inch Suction Main.

(2) Three (3) Tar Storage Tanks T-301,T-302A, T-302B, identified as CBTA0146, CBTB0147 and CBTC0148, constructed in 1948, 1930, and 1930, respectively, with vapors directed by a natural gas blanketing system CB3051 to Control Station No. 5 and into the 72-inch Suction Main.

(3) Two (2) Storage Tanks T-7100, T7110 and T-7120, constructed and refurbished in 1997, with vapors directed by a natural gas blanketing system CB3051 to Control Station No. 5 and into the 72-inch Suction Main.

(4) Two (2) Oil/Tar Separator Tanks, T-7000 and T-7010, constructed in 1997, with vapors directed by a natural gas blanketing system CB3051 to Control Station No. 5 and into the 72-inch Suction Main.

(5) Two (2) Oil and Tar Receiver Tanks, T-7020 and T-7030, constructed in 1997 with vapors directed by a natural gas blanketing system CB3051 to Control Station No. 5 and into the 72-inch Suction Main.

(6) One (1) Surge Tank T-7800, constructed in 1997, with vapors directed to a nitrogen gas blanketing system.

(7) Distillation Sump Emission Control

One (1) Distillation Sump Emission Control System, identified as CBS80151, constructed in 1989 with vapors directed to a nitrogen gas blanketing system.

(8) Coke Oven Gas (COG) High Pressure Control System, constructed in 1991, contains instrumentation and control valves designed to limit the maximum pressure in the COG distribution system. Excess COG pressure is directed to and combusted in a bleeder flare with emissions exhausting to Stack CG6077.

(9) Equipment in Benzene Service consist of several hundred components pumps, exhausters, valves, flanges and pressure relief devices in benzene service within the byproducts plant.

Corrective Action Management Unit (CAMU)

(a) One (1) CAMU Evaporative Spray System, with a maximum throughput capacity of 250 gallons per minute (gpm), consisting of 16 spray heads, each with a rated capacity of 14.4 gpm, located on the floor of CAMU Unit 2. The system is fed from a single pump drawing water from the CAMU Unit 1 leachate collection system, which contains non-native materials dredged from the Calumet River.

(The information describing the process contained in this facility description box is descriptive information and does not constitute enforceable conditions.)

National Emissions Standards for Hazardous Air Pollutants

F.13.1 National Emissions Standards for Benzene Waste Operations [40 CFR 61, Subpart FF]

Pursuant to 40 CFR Part 61, Subpart FF, the Permitteee shall comply with the following provisions of this NESHAP (included as Attachment N of this permit):

(1) 40 CFR 61.340(a), (b)
(2) 40 CFR 61.341
(3) 40 CFR 61.342(a), (c)(2),(3)
(4) 40 CFR 61.355(a)(4)(i), (ii), (c)(1), (2), (3)
(5) 40 CFR 61.356(a), (b)(2)(i)
(6) 40 CFR 61.357(a)(1), (3), (4), (c)
(7) 40 CFR 61.358

SECTION F.14 FACILITY OPERATION CONDITIONS - NESHAP, SUBPART DDDDD

Emissions Unit Description:

Coke Plant Boiler House

(a) Two (2) Boilers, Nos. 1 and 2, identified as CSS10155 and CSS20156, constructed prior to 1970, with a maximum heat input capacity of 160 MMBtu per hour each, exhausting to stack CS6061. These boilers are equipped to combust natural gas.

(b) One (1) Boiler, No. 3, identified as CSS30157, constructed in 1943, with a maximum heat input capacity of 160 MMBtu per hour, exhausting to stack CS6062. This boiler is equipped to combust natural gas and coke oven gas.

(c) Two (2) Boilers, Nos. 4 and 5, identified as CSS40158 and CSS50159, constructed prior to 1955, with a maximum heat input of 170 MMBtu per hour each, exhausting to stack CS6063. These boilers are equipped to combust natural gas and coke oven gas.

(d) One (1) Boiler No. 6, identified as CSS60160, constructed in 1955, with a maximum heat input capacity of 170 MMBtu per hour, exhausting to stack CS6064. This boiler is equipped to combust natural gas and coke oven gas.

(e) One (1) Boiler, No. 7, identified as CS70161, constructed in 1976, with a maximum heat input capacity of 170 MMBtu per hour, exhausting to stack CS6065. This boiler is equipped to combust natural gas and coke oven gas.

(f) One (1) Boiler, No. 8, identified as CSS80162, constructed in 1981, with a maximum heat input capacity of 249 MMBtu per hour, exhausting to stack CS6066. This boiler is equipped to combust natural gas and coke oven gas.

(g) Two (2) boilers at the coke plant boiler house, identified as Boilers No. 9 CSS80164 and No. 10 CSS80165, constructed in 2004, each with a maximum heat input capacity of 235 MMBtu/hr, exhausting to stacks CS6067 and CS6068, respectively. These boilers are equipped to burn natural gas and coke oven gas.

Hot Rolling Mill

(c) Electro-galvanizing Line (EGL)

(2) One (1) natural gas fired Boiler No. 1 in the EGL Boiler House, identified as HBB10675, constructed in 1978 and modified in 2001, with a heat input capacity of 39.147 MMBtu per hour, exhausting through stack HB6559.

No. 4 Boiler House

(a) Two (2) Boilers, No. 1 and No. 2, identified as O4B10459 and O4B20460, constructed in 1967, equipped to combust natural gas, blast furnace gas and fuel oil, with a maximum heat input of 500 MMBtu per hour each, exhausting through Stacks O46268 and O46269, respectively.

(b) One (1) Boiler, No. 3, identified as O4B30461, constructed in 1967, equipped to combust blast furnace gas and natural gas, with a maximum heat input of 500 MMBtu per hour, exhausting through Stack O46270.

Turboblower Boiler House (TBBH)

(a) Three (3) Boilers, No. 1, No. 2 and No. 3, identified as OTB10462, OTB20463 and OTB30464, constructed in 1948, equipped to combust blast furnace gas, coke oven gas, fuel oil and natural gas, with a maximum heat input of 410 MMBtu per hour each, exhausting through Stacks OT6271, OT6272 and OT6273, respectively.

(b) One (1) Boiler No. 5, identified as OTB50466, constructed in 1958, equipped to combust blast furnace gas, coke oven gas, fuel oil and natural gas, with a maximum heat input of 410 MMBtu per hour, exhausting through Stack OT6275.

(c) One (1) boiler, No. 6, identified as OTB60467, constructed after August 17, 1971, equipped to combust blast furnace gas and natural gas, with a maximum heat input capacity of 710 MMBtu per hour, exhausting through Stack OT6276.

Sheet Products Division

(a) North Sheet Mill

(2) Twenty-six (26) 4-Stack A Box Annealing Furnaces and 50 bases, identified as HTAF0813 through HTAF0838, constructed in 1964, with a heat input capacity of 12 MMBtu per hour each. These furnaces are direct fired with emissions exhausting through vent pipes HT6530 through HT6555.

(b) South Sheet Mill

(1) Seventeen (17) 8-Stack A Box Annealing furnaces and 66 bases, identified as HXBA0560 through HXBA0576, constructed in 1948. Eleven (11) furnaces have a heat input capacity of 15 MMBtu per hour each and the remaining six (6) are rated at 18 MMBtu per hour each. Emissions from these furnaces exhaust through the Roof Monitor HX6003.

(4) Two (2) hydrogen atmosphere batch annealing furnaces, with a total heat input capacity of 10.26 MMBtu per hour, constructed in 1997, consisting of three (3) fixed bases and two (2) movable cooling hoods.

Tin Division

(c) Two (2) Annealing Lines, No. 1 and No. 2, each containing an annealing furnace, identified as T1AF0794 and T2AF0799, No. 1 constructed in 1950 and No. 2 constructed in 1959, with a maximum heat input capacities of 32 and 35 MMBtu per hour, respectively. Emissions exhaust to stacks T16609 and T26610. The No. 2 Continuous Anneal Line has a cleaning section with fumes collected in a fume scrubber exhausting through a stack

(d) Five (5) 4-Stack A Box Annealing Furnaces and 12 bases, identified as TXAF0765 through TXAF0769, constructed in 1968. All furnaces have a heat input of 10.5 MMBtu per hour each. Emissions exhaust to stacks TX6580 through TX6584.

(The information describing the process contained in this facility description box is descriptive information and does not constitute enforceable conditions.)

National Emissions Standards for Hazardous Air Pollutants

F.14.1 General Provisions Relating to National Emission Standards for Hazardous Air Pollutants under 40 CFR Part 63 [326 IAC 20-1] [40 CFR Part 63, Subpart A]

(a) Pursuant to 40 CFR 63.7565, the Permittee shall comply with the provisions of 40 CFR Part 63, Subpart A – General Provisions, which are incorporated by reference as 326 IAC 20-1-1 in accordance with schedule in 40 CFR 63 Subpart DDDDD.

F.14.2 Applicability of National Emission Standards for Hazardous Air Pollutants for Industrial, Commercial, and Institutional Boilers and Process Heaters Requirements [40 CFR Part 63, Subpart DDDDD]

The provisions of 40 CFR Part 63, Subpart DDDDD (National Emission Standards for Hazardous Air Pollutants for Industrial, Commercial, and Institutional Boilers and Process Heaters) shall apply to existing boilers and process heaters constructed before June 4, 2010, and shall be in compliance no later than January 31, 2016:

(1) 40 CFR § 63.7480
(2) 40 CFR § 63.7485
(3) 40 CFR § 63.7490
(4) 40 CFR § 63.7495(b)
(5) 40 CFR § 63.7499(l), (n)
(6) 40 CFR § 63.7500(a)(1)
(7) 40 CFR § 63.7510(e)
(7) 40 CFR § 63.7515(e)
(8) 40 CFR § 63.7540(a)(10)
(9) 40 CFR § 63.7545(f)
(10) 40 CFR § 63.7550(c)(1) through (3), (12),
(11) 40 CFR § 63.7555(a)(1)
(11) 40 CFR § 63.7560
(12) 40 CFR § 63.7565
(13) 40 CFR§ 63.7570
(14) 40 CFR§ 63.7575
(15) Table 3 to Subpart DDDDD of Part 63, items (1) through (3)
(16) Table 10 to Subpart DDDDD of Part 63

INDIANA DEPARTMENT OF ENVIRONMENTAL MANAGEMENT
OFFICE OF AIR QUALITY
COMPLIANCE AND ENFORCEMENT BRANCH

PART 70 OPERATING PERMIT
CERTIFICATION

Source Name: U.S. Steel - Gary Works
Source Address: One North Broadway, Gary, IN 46402
Part 70 Permit No.: T089-29907-00121

This certification shall be included when submitting monitoring, testing reports/results or other documents as required by this approval.

Please check what document is being certified:

Test Result (specify)_____

Report (specify) _____

Notification (specify) _____

Other (specify) _____

I certify that, based on information and belief formed after reasonable inquiry, the statements and information in the document are true, accurate, and complete.
Signature:
Printed Name:
Title/Position:
Phone:
Date:

INDIANA DEPARTMENT OF ENVIRONMENTAL MANAGEMENT
OFFICE OF AIR QUALITY
COMPLIANCE AND ENFORCEMENT BRANCH

100 North Senate Avenue
MC 61-53 IGCN 1003
Indianapolis, Indiana 46204-2251
Phone: 317-233-0178
Fax: 317-233-6865

EMERGENCY OCCURRENCE REPORT

Source Name: U.S. Steel - Gary Works
Source Address: One North Broadway, Gary, IN 46402
Part 70 Permit No.: T089-29907-00121

This form consists of 2 pages Page 1 of 2

This is an emergency as defined in 326 IAC 2-7-1(12) The Permittee must notify the Office of Air Quality (OAQ), within four (**4**) business hours (1-800-451-6027 or 317-233-0178, ask for Compliance Section); and The Permittee must submit notice in writing or by facsimile within two (**2**) days (Facsimile Number: 317-233-6865), and follow the other requirements of 326 IAC 2-7-16.

If any of the following are not applicable, mark N/A

Facility/Equipment/Operation:
Control Equipment:
Permit Condition or Operation Limitation in Permit:
Description of the Emergency:
Describe the cause of the Emergency:

If any of the following are not applicable, mark N/A

Date/Time Emergency started:
Date/Time Emergency was corrected:
Was the facility being properly operated at the time of the emergency? Y N Describe:
Type of Pollutants Emitted: TSP, PM-10, SO_2, VOC, NO_X, CO, Pb, other:
Estimated amount of pollutant(s) emitted during emergency:
Describe the steps taken to mitigate the problem:
Describe the corrective actions/response steps taken:
Describe the measures taken to minimize emissions:
If applicable, describe the reasons why continued operation of the facilities are necessary to prevent imminent injury to persons, severe damage to equipment, substantial loss of capital investment, or loss of product or raw materials of substantial economic value:

Form Completed by: _____

Title / Position: _____

Date: _____

Phone: _____

INDIANA DEPARTMENT OF ENVIRONMENTAL MANAGEMENT
OFFICE OF AIR QUALITY
Compliance and Enforcement Branch

QUARTERLY DEVIATION AND COMPLIANCE MONITORING REPORT

Source Name: U.S. Steel - Gary Works
Source Address: One North Broadway, Gary, IN 46402
Part 70 Permit No.: T089-29907-00121

Months: _____ to _____ Year: _____

This report shall be submitted quarterly based on a calendar year. Proper notice submittal under Section B – Emergency Provisions satisfies the reporting requirements of paragraph (a) of Section C - General Reporting. Any deviation from the requirements of this permit, the date(s) of each deviation, the probable cause of the deviation, and the response steps taken must be reported. A deviation required to be reported pursuant to an applicable requirement that exists independent of the permit, shall be reported according to the schedule stated in the applicable requirement and does not need to be included in this report. Additional pages may be attached if necessary. If no deviations occurred, please specify in the box marked "No deviations occurred this reporting period".
☐ NO DEVIATIONS OCCURRED THIS REPORTING PERIOD.
☐ THE FOLLOWING DEVIATIONS OCCURRED THIS REPORTING PERIOD

Permit Requirement (specify permit condition #)	
Date of Deviation:	Duration of Deviation:
Number of Deviations:	
Probable Cause of Deviation:	
Response Steps Taken:	

Permit Requirement (specify permit condition #)	
Date of Deviation:	Duration of Deviation:
Number of Deviations:	
Probable Cause of Deviation:	
Response Steps Taken:	

Permit Requirement (specify permit condition #)	
Date of Deviation:	Duration of Deviation:
Number of Deviations:	
Probable Cause of Deviation:	
Response Steps Taken:	
Permit Requirement (specify permit condition #)	
Date of Deviation:	Duration of Deviation:
Number of Deviations:	
Probable Cause of Deviation:	
Response Steps Taken:	
Permit Requirement (specify permit condition #)	
Date of Deviation:	Duration of Deviation:
Number of Deviations:	
Probable Cause of Deviation:	
Response Steps Taken:	

Form Completed By: _____

Title/Position:_____

Date: _____

Phone: _____

INDIANA DEPARTMENT OF ENVIRONMENTAL MANAGEMENT
OFFICE OF AIR QUALITY
COMPLIANCE AND ENFORCEMENT BRANCH

Part 70 Operating Permit Quarterly Report

Source Name: U.S. Steel - Gary Works
Source Address: One North Broadway, Gary, IN 46402
Part 70 Permit No.: T089-29907-00121
Facility: No. 3 Sinter Plant Sinter Strand Windbox recirculating burners (ISB001, ISB002, and ISB003)
Parameter: Natural gas usage
Limit: 95.5 million cubic feet (MMCF) per 12-consecutive month period with compliance demonstrated at the end of each month.

QUARTER: _____ YEAR:_____

Month	Column 1	Column 2	Column 1 + Column 2
	This Month	Previous 11 Months	12 month Total
Month 1			
Month 2			
Month 3			

☐ No deviation occurred in this quarter.

☐ Deviation/s occurred in this quarter.

Deviation has been reported on: _____

Submitted by: _____

Title / Position: _____

Signature: _____

Date: _____

Phone: _____

INDIANA DEPARTMENT OF ENVIRONMENTAL MANAGEMENT
OFFICE OF AIR QUALITY
COMPLIANCE AND ENFORCEMENT BRANCH

Part 70 Permit Quarterly Report

Source Name: U.S. Steel - Gary Works
Source Address: One North Broadway, Gary, IN 46402
Part 70 Permit No.: T089-29907-00121
Facility: No. 3 Sinter Plant Sinter Strand Windbox recirculating burners (ISB001, ISB002, and ISB003)
Parameter: Coke oven gas usage
Limit: 1,637.4 million cubic feet (MMCF) per 12-consecutive month period with compliance demonstrated at the end of each month

QUARTER:_____ YEAR:_____

Month	Column 1	Column 2	Column 1 + Column 2
	This Month	Previous 11 Months	12 Month Total
Month 1			
Month 2			
Month 3			

☐ No deviation occurred in this quarter.

☐ Deviation/s occurred in this quarter.

Deviation has been reported on: _____

Submitted by :_____

Title / Position: _____

Signature: _____

Date: _____

Phone: _____

INDIANA DEPARTMENT OF ENVIRONMENTAL MANAGEMENT
OFFICE OF AIR QUALITY
COMPLIANCE AND ENFORCEMENT BRANCH

Part 70 Operating Permit Quarterly Report

Source Name: U.S. Steel - Gary Works
Source Address: One North Broadway, Gary, IN 46402
Part 70 Permit No.: T089-29907-00121
Facility: South Sheet Mill hydrogen atmosphere batch annealing furnaces
Parameter: NOx
Limit: 37.2 million cubic feet (MMCF) of natural gas per 12 consecutive month period with compliance demonstrated at the end of each month,

YEAR:_____

Month	Column 1	Column 2	Column 1 + Column 2
	This month	11 previous months	12 month total
Month 1			
Month 2			
Month 3			

☐ No deviation occurred in this quarter.
☐ Deviation/s occurred in this quarter.

Deviation has been reported on:_____

Submitted by:_____

Title / Position:_____

Signature:_____

Date_____

Phone:_____

INDIANA DEPARTMENT OF ENVIRONMENTAL MANAGEMENT
OFFICE OF AIR Quality
COMPLIANCE AND ENFORCEMENT BRANCH

Part 70 Operating Permit Quarterly Report

Source Name: U.S. Steel - Gary Works
Source Address: One North Broadway, Gary, Indiana 46402
Part 70 Part No.: T089-29907-00121
Facility: Turboblower Boiler House (TBBH) boiler no. 6
Parameter: Natural Gas Usage
Limits: 1,059.7 million cubic feet (MMCF) per 12-consecutive month period with compliance demonstrated at the end of each month.

QUARTER: _____YEAR: _____

Month	Column 1	Column 2	Column 1 + Column 2
	This month	11 previous months	12 month total
Month 1			
Month 2			
Month 3			

☐ No deviation occurred in this quarter.

☐ Deviation/s occurred in this quarter.

Deviation has been reported on: _____

Submitted by: _____

Title / Position: _____

Signature: _____

Date: _____

Phone: _____

INDIANA DEPARTMENT OF ENVIRONMENTAL MANAGEMENT
OFFICE OF AIR QUALITY
COMPLIANCE AND ENFORCEMENT BRANCH

Part 70 Quarterly Report

Source Name: U.S. Steel - Gary Works
Source Address: One North Broadway, Gary, IN 46402
Part 70 Permit No.: T089-29907-00121
Facility: Coke oven battery natural gas injection jets (CPNG001, CPNG002, and CPNG003)
Parameter: Natural gas usage
Limit: 178.7 million cubic feet (MMCF) per 12-consecutive month period with compliance demonstrated at the end of each month.

QUARTER:_____YEAR_____

Month	Column 1	Column 2	Column 1 + Column 2
	This month	11 previous months	12 month total
Month 1			
Month 2			
Month 3			

☐ No deviation occurred in this quarter.

☐ Deviation/s occurred in this quarter.

Deviation has been reported on: _____

Submitted by: _____

Title / Position: _____

Signature: _____

Date: _____

Phone: _____

INDIANA DEPARTMENT OF ENVIRONMENTAL MANAGEMENT
OFFICE OF AIR QUALITY
COMPLIANCE AND ENFORCEMENT BRANCH

Part 70 Quarterly Report

Source Name:	U.S. Steel - Gary Works
Source Address:	One North Broadway, Gary, IN 46402
Part 70 Permit No.:	T089-29907-00121
Facility:	Boilers No. through No. 10 and the temporary rental boiler at the coke plant boiler house
Parameter:	Total NOx emissions
Limit:	Less than 64.6 tons per twelve (12) consecutive month period with compliance demonstrated at the end of each month

NOx Emissions (tons/month) = (280X + 36Y + 129 Z)/ 2000

Where X = total monthly natural gas usage in boilers No. 1 through No. 8 (MMCF/month)
Y= monthly natural usage in the temporary rental boiler (MMCF/month)
Z = total monthly natural gas usage in boilers No. 9 and 10 (MMCF/month)

QUARTER:_____YEAR_____

Month	Column 1	Column 2	Column 1 + Column 2
	This month	11 previous months	12 month total
Month 1			
Month 2			
Month 3			

☐ No deviation occurred in this quarter.

☐ Deviation/s occurred in this quarter.

Deviation has been reported on: _____

Submitted by: _____

Title / Position: _____

Signature: _____

Date: _____

Phone: _____

INDIANA DEPARTMENT OF ENVIRONMENTAL MANAGEMENT
OFFICE OF AIR QUALITY
COMPLIANCE AND ENFORCEMENT BRANCH

Part 70 Quarterly Report

Source Name: U.S. Steel - Gary Works
Source Address: One North Broadway, Gary, IN 46402
Part 70 Permit No.: T089-29907-00121
Facility: Boilers No. 1 through No.10 and the temporary rental boiler at the coke plant boiler house
Parameter: Total Natural gas usage
Limit: Less than 2,550 MMCF per 12-consecutive month period with compliance demonstrated at the end of each month.

QUARTER:_____YEAR_____

Month	Column 1	Column 2	Column 1 + Column 2
	This month	11 previous months	12 month total
Month 1			
Month 2			
Month 3			

☐ No deviation occurred in this quarter.

☐ Deviation/s occurred in this quarter.

Deviation has been reported on: _____

Submitted by: _____

Title / Position: _____

Signature: _____

Date: _____

Phone: _____

INDIANA DEPARTMENT OF ENVIRONMENTAL MANAGEMENT
OFFICE OF AIR Quality
COMPLIANCE AND ENFORCEMENT BRANCH

Part 70 Quarterly Report

Source Name: U.S. Steel - Gary Works
Source Address: One North Broadway, Gary, Indiana 46406
Part 70 Permit No.: T089-29907-00121
Facility: Granulation plant
Parameter: granule process rate
Limit:: 1,704,000 tons per 12 consecutive month period with compliance demonstrated at the end of each month

Year:_____

Month	Column 1	Column 2	Column 1 + Column 2
	This Month	Previous 11 Months	12 Month Total
Month 1			
Month 2			
Month 3			

☐ No deviation occurred in this quarter.

☐ Deviations occurred in this quarter.

Deviation has been reported on:_____

Submitted by: _____

Title / Position _____

Signature _____

Date: _____

Phone: _____

INDIANA DEPARTMENT OF ENVIRONMENTAL MANAGEMENT
OFFICE OF AIR QUALITY
COMPLIANCE AND ENFORCEMENT BRANCH

Part 70 Quarterly Report

Source Name: U.S. Steel - Gary Works
Source Address: One North Broadway, Gary, IN 46402
Part 70 Permit No.: T089-29907-00121
Facility: Air Preheaters 1, 2 and 3 combined (former Gary Coal Processing, LP)
Parameter: Natural gas usage
Limit: Natural gas usage of 549 MMCF per 12 consecutive month period with compliance demonstrated at the end of each month and less than 183 MMcf per month.

YEAR:_____

Month	Column 1	Column 2	Column 1 + Column 2
	This Month	Previous 11 Months	12 Month Total
Month 1			
Month 2			
Month 3			

☐ No deviation occurred in this quarter.

☐ Deviations occurred in this quarter.

Deviation has been reported on:_____

Submitted by: _____

Title/Position:_____

Signature: _____

Date: _____

Phone_____

INDIANA DEPARTMENT OF ENVIRONMENTAL MANAGEMENT
OFFICE OF AIR QUALITY
COMPLIANCE AND ENFORCEMENT BRANCH

Part 70 Quarterly Report

Source Name: U.S. Steel - Gary Works
Source Address: One North Broadway, Gary, IN 46402
Part 70 Permit No.: T089-29907-00121
Facility: Railcar Heater - Thaw shed (former Gary Coal Processing, LP)
Parameter: Natural gas usage
Limit: Natural gas usage of 12.504 MMCF per 12 consecutive month period with compliance demonstrated at the end of each month and less than 5 MMCF per month.

YEAR:_____

Month	Column 1	Column 2	Column 1 + Column 2
	This Month	Previous 11 Months	12 Month Total
Month 1			
Month 2			
Month 3			

☐ No deviation occurred in this quarter.

☐ Deviation/s occurred in this quarter.

Deviation has been reported on:

Submitted by: _____

Title/Position:_____

Signature: _____

Date: _____

Phone_____

INDIANA DEPARTMENT OF ENVIRONMENTAL MANAGEMENT
OFFICE OF AIR QUALITY
COMPLIANCE AND ENFORCEMENT BRANCH

Part 70 Quarterly Report

Source Name: U.S. Steel - Gary Works
Source Address: One North Broadway, Gary, IN 46402
Part 70 Permit No.: T089-29907-00121
Parameter: Coal input
Limit: The input of coal to each of the following facilities shall be less than 750,000 tons per twelve (12) consecutive month period with compliance determined at the end of each month:

- HS1 intermediate storage pile #1
- phase 1 coal piles (4 piles)
- CASP C/D hopper feeder & conveyor (PHS1-HC1)
- PHS1 intermediate storage pile #2.

FACILITY:_____ QUARTER: _____ YEAR: _____

Month	Material Input (tons)	Material Input (tons)	Material Input (tons)
	This Month	Previous 11 Months	12 Month Total
Month 1			
Month 2			
Month 3			

☐ No deviation occurred in this quarter.

☐ Deviation/s occurred in this quarter.
Deviation has been reported on: _____

Submitted by: _____

Title / Position: _____

Signature: _____

Date: _____

Phone: _____

INDIANA DEPARTMENT OF ENVIRONMENTAL MANAGEMENT
OFFICE OF AIR QUALITY
COMPLIANCE AND ENFORCEMENT BRANCH

Part 70 Quarterly Report

Source Name: U.S. Steel - Gary Works
Source Address: One North Broadway, Gary, IN 46402
Part 70 Permit No.: T089-29907-00121
Parameter: Coal input
Limit: The input of coal to each of the following facilities shall be less than 375,000 tons per twelve (12) consecutive month period with compliance determined at the end of each month:

CASP A - feed hopper (CASPA-FH1), CASP A Conv. #1 (CASPA-C1), CASP A Conv. #2 (CASPA-C2), CASP A coal feed hopper (CASPA-FH2), CASP B - feed hopper (CASPB-FH1), CASP B Conv. #1 (CASPB-C1), CASP B Conv. #2 (CASPB-C2), CASP B coal feed hopper (CASPB-FH2), CASP C coal feed hopper No.2 (CASPC-FH2), CASP D coal feed hopper No.2 (CASPD-FH2), CASP C coal feed conveyor (PHS1C-C1), CASP C coal feed conveyor (PHS1C-C2), CASP D coal conveyor (PHS1D-C1), CASP D coal conveyor (PHS1D-C2), CASP C - coal feed hopper No.1 (CASPC-FH1), CASP C coal conveyor (CASPC-C1), CASP C coal conveyor (CASPC-C2), CASP D - coal feed hopper No.1 (CASPD-FH1), CASP D coal conveyor (CASPD-C1), CASP D coal conveyor (CASPD-C2)

FACILITY:_____ QUARTER: _____ YEAR: _____

Month	Material Input (tons)	Material Input (tons)	Material Input (tons)
	This Month	Previous 11 Months	12 Month Total
Month 1			
Month 2			
Month 3			

☐ No deviation occurred in this quarter.

☐ Deviation/s occurred in this quarter.
Deviation has been reported on: _____

Submitted by: _____

Title / Position: _____

Signature: _____

Date: _____

Phone: _____

INDIANA DEPARTMENT OF ENVIRONMENTAL MANAGEMENT
OFFICE OF AIR QUALITY
COMPLIANCE AND ENFORCEMENT BRANCH

Part 70 Quarterly Report

Source Name: U.S. Steel - Gary Works
Source Address: One North Broadway, Gary, IN 46402
Part 70 Permit No.: T089-29907-00121
Parameter: Coal input
Limit: The amount of coal handled by the Phase 1 CASP C/D Coal Feed Path facilities (PHS1 intermediate storage pile #1, phase 1 coal piles, PHS1-HC1, PHS1 intermediate storage pile #2) and the Phase 2 CASP A/B/C/D Coal Feed Path facilities (CASP-C1, CASP-C2, CASP-RS1, and CASP coal storage piles) shall be less than 1,500,000 tons per twelve consecutive month period with compliance determined at the end of each month.

FACILITY:_____ QUARTER: _____ YEAR: _____

Month	Material Input (tons)	Material Input (tons)	Material Input (tons)
	This Month	Previous 11 Months	12 Month Total
Month 1			
Month 2			
Month 3			

☐ No deviation occurred in this quarter.

☐ Deviation/s occurred in this quarter.
Deviation has been reported on: _____

Submitted by: _____

Title / Position: _____

Signature: _____

Date: _____

Phone: _____

INDIANA DEPARTMENT OF ENVIRONMENTAL MANAGEMENT
OFFICE OF AIR QUALITY
COMPLIANCE AND ENFORCEMENT BRANCH

Part 70 Quarterly Report

Source Name: U.S. Steel - Gary Works
Source Address: One North Broadway, Gary, IN 46402
Part 70 Permit No.: T089-29907-00121
Parameter: Coal input
Limit: The amount of coal handled by the Phase 1 CASP C Coal Feed Path facilities (PHS1C-C1 and PHS1C-C2) and the Phase 2 CASP C Coal Feed Path facilities (CASPC-FH1, CASPC-C1, and CASPC-C2) shall be less than 375,000 tons per twelve (12) consecutive month period with compliance determined at the end of each month.

FACILITY:_____ QUARTER: _____ YEAR: _____

Month	Material Input (tons)	Material Input (tons)	Material Input (tons)
	This Month	Previous 11 Months	12 Month Total
Month 1			
Month 2			
Month 3			

☐ No deviation occurred in this quarter.

☐ Deviation/s occurred in this quarter.
Deviation has been reported on: _____

Submitted by: _____

Title / Position: _____

Signature: _____

Date: _____

Phone: _____

INDIANA DEPARTMENT OF ENVIRONMENTAL MANAGEMENT
OFFICE OF AIR QUALITY
COMPLIANCE AND ENFORCEMENT BRANCH

Part 70 Quarterly Report

Source Name:	U.S. Steel - Gary Works
Source Address:	One North Broadway, Gary, IN 46402
Part 70 Permit No.:	T089-29907-00121
Parameter:	Cokonyx input
Limit:	The amount of coal handled by the Phase 1 CASP D Coal Feed Path facilities (PHS1D-C1 and PHS1D-C2)and the Phase 2 CASP D Coal Feed Path facilities (CASPD-FH1, CASPD-C1, and CASPD-C2) shall be less than 375,000 tons per twelve (12) consecutive month period with compliance determined at the end of each month.

FACILITY:_____ QUARTER: _____ YEAR: _____

Month	Material Input (tons)	Material Input (tons)	Material Input (tons)
	This Month	Previous 11 Months	12 Month Total
Month 1			
Month 2			
Month 3			

☐ No deviation occurred in this quarter.

☐ Deviation/s occurred in this quarter.
Deviation has been reported on: _____

Submitted by: _____

Title / Position: _____

Signature: _____

Date: _____

Phone: _____

INDIANA DEPARTMENT OF ENVIRONMENTAL MANAGEMENT
OFFICE OF AIR QUALITY
COMPLIANCE AND ENFORCEMENT BRANCH

Part 70 Quarterly Report

Source Name: U.S. Steel - Gary Works
Source Address: One North Broadway, Gary, IN 46402
Part 70 Permit No.: T089-29907-00121
Parameter: Billets and Billet Fines input
Limit: The input of billets and billet fines to each of the following facilities shall be less than 50,000 tons per twelve (12) consecutive month period with compliance determined at the end of each month:

CASP A billet fines hopper (OR-A-06-HP1125), CASP A billet fine conveyor (OR-A-06-CB1130), CASP A billet fine conveyor (OR-A-06-CB1140), CASP A billet fine conveyor (OR-A-06-CB1145), CASP B billet fines hopper (OR-B-06-HP1125), CASP B billet fine conveyor (OR-B-06-CB1130), CASP B billet fine conveyor (OR-B-06-CB1140), CASP B billet fine conveyor (OR-B-06-CB1145), CASP C billet fines hopper (OR-C-06-HP1125), CASP C billet fine conveyor (OR-C-06-CB1130), CASP C billet fine conveyor (OR-C-06-CB1140), CASP C billet fine conveyor (OR-C-06-CB1145), CASP D billet fines hopper (OR-D-06-HP1125), CASP D billet fine conveyor (OR-D-06-CB1130), CASP D billet fine conveyor (OR-D-06-CB1140), CASP D billet fine conveyor (OR-D-06-CB1145)

FACILITY:_____ QUARTER: _____ YEAR: _____

Month	Material Input (tons)	Material Input (tons)	Material Input (tons)
	This Month	Previous 11 Months	12 Month Total
Month 1			
Month 2			
Month 3			

☐ No deviation occurred in this quarter.

☐ Deviation/s occurred in this quarter.
Deviation has been reported on: _____

Submitted by: _____

Title / Position: _____

Signature: _____

Date: _____

Phone: _____

INDIANA DEPARTMENT OF ENVIRONMENTAL MANAGEMENT
OFFICE OF AIR QUALITY
COMPLIANCE AND ENFORCEMENT BRANCH

Part 70 Quarterly Report

Source Name: U.S. Steel - Gary Works
Source Address: One North Broadway, Gary, IN 46402
Part 70 Permit No.: T089-29907-00121
Parameter: Billets and Billet Fines input
Limit: The input of billets and billet fines to each of the following facilities shall be less than 375,000 tons per twelve (12) consecutive month period with compliance determined at the end of each month:

CASP A billet drag conveyer (OR-A-06-CD1110), CASP A billet hopper (OR-A-06-HP1115), CASP A billet hopper (OR-A-06-HP1135), CASP A billet drag conveyor (OR-A-06-CD1150), CASP A billet drag conveyor (OR-A-06-CD1160), CASP A billet drag conveyor (OR-A-06-CD1170), CASP A billet drag conveyor (OR-A-06-CD1180), CASP A billet drag conveyor (OR-A-06-CD1190), CASP B billet drag conveyer (OR-B-06-CD1110), CASP B billet hopper (OR-B-06-HP1115), CASP B billet hopper (OR-B-06-HP1135), CASP B billet drag conveyor (OR-B-06-CD1150), CASP B billet drag conveyor (OR-B-06-CD1160), CASP B billet drag conveyor (OR-B-06-CD1170), CASP B billet drag conveyor (OR-B-06-CD1180), CASP B billet drag conveyor (OR-B-06-CD1190), CASP C billet drag conveyer (OR-C-06-CD1110), CASP C billet hopper (OR-C-06-HP1115), CASP C billet hopper (OR-C-06-HP1135), CASP C billet drag conveyor (OR-C-06-CD1150), CASP A billet drag conveyor (OR-C-06-CD1160), CASP C billet drag conveyor (OR-C-06-CD1170), CASP C billet drag conveyor (OR-C-06-CD1180), CASP C billet drag conveyor (OR-C-06-CD1190), CASP D billet drag conveyer (OR-D-06-CD1110), CASP D billet hopper (OR-DA-06-HP1115), CASP D billet hopper (OR-D-06-HP1135), CASP D billet drag conveyor (OR-D-06-CD1150), CASP D billet drag conveyor (OR-D-06-CD1160), CASP D billet drag conveyor (OR-D-06-CD1170), CASP D billet drag conveyor (OR-D-06-CD1180), CASP D billet drag conveyor (OR-D-06-CD1190)

FACILITY:_____ QUARTER: _____ YEAR: _____

Month	Material Input (tons)	Material Input (tons)	Material Input (tons)
	This Month	Previous 11 Months	12 Month Total
Month 1			
Month 2			
Month 3			

☐ No deviation occurred in this quarter.

☐ Deviation/s occurred in this quarter.
Deviation has been reported on: _____

Submitted by: _____

Title / Position: _____

Signature: _____

Date: _____

Phone: _____

INDIANA DEPARTMENT OF ENVIRONMENTAL MANAGEMENT
OFFICE OF AIR QUALITY
COMPLIANCE AND ENFORCEMENT BRANCH

Part 70 Quarterly Report

Source Name: U.S. Steel - Gary Works
Source Address: One North Broadway, Gary, IN 46402
Part 70 Permit No.: T089-29907-00121
Parameter: Billets and Billet Fines input
Limit: The input of billets and billet fines to each of the following combinations of facilities shall be less than 375,000 tons per twelve (12) consecutive month period with compliance determined at the end of each month:

CASP A billet belt conveyors OR-A-06-CB1120 and OR-A-06-CB1126, CASP A billet belt conveyors OR-A-06-CB2120 and OR-A-06-CB2126, CASP A billet vibratory feeders OR-A-06-VF1125 and OR-A-06-VF2126, CASP A trolley loading pans (collectively identified as OR-A-09-LD-1128), CASP A trolley cars (collectively identified as OR-A-09-LD-1128), CASP B billet belt conveyors OR-B-06-CB1120 and OR-B-06-CB1126, CASP B billet belt conveyors OR-B-06-CB2120 and OR-B-06-CB2126, CASP B billet vibratory feeders OR-B-06-VF1125 and OR-A-06-VF2126, CASP B trolley loading pans (collectively identified as OR-B-09-LD-1128), CASP B trolley cars (collectively identified as OR-A-09-LD-1128), CASP C billet belt conveyors OR-C-06-CB1120 and OR-C-06-CB1126, CASP A billet belt conveyors OR-C-06-CB2120 and OR-C-06-CB2126, CASP C billet vibratory feeders OR-C-06-VF1125 and OR-C-06-VF2126, CASP C trolley loading pans (collectively identified as OR-C-09-LD-1128), CASP C trolley cars (collectively identified as OR-C-09-LD-1128), CASP D billet belt conveyors OR-D-06-CB1120 and OR-D-06-CB1126, CASP D billet belt conveyors OR-D-06-CB2120 and OR-D-06-CB2126, CASP D billet vibratory feeders OR-D-06-VF1125 and OR-D-06-VF2126, CASP D trolley loading pans (collectively identified as OR-D-09-LD-1128), CASP D trolley cars (collectively identified as OR-D-09-LD-1128)

FACILITY:_____ QUARTER: _____ YEAR: _____

Month	Material Input (tons)	Material Input (tons)	Material Input (tons)
	This Month	Previous 11 Months	12 Month Total
Month 1			
Month 2			
Month 3			

☐ No deviation occurred in this quarter.

☐ Deviation/s occurred in this quarter.
Deviation has been reported on: _____

Submitted by: _____

Title / Position: _____

Signature: _____

Date: _____

Phone: _____

INDIANA DEPARTMENT OF ENVIRONMENTAL MANAGEMENT
OFFICE OF AIR QUALITY
COMPLIANCE AND ENFORCEMENT BRANCH

Part 70 Quarterly Report

Source Name: U.S. Steel - Gary Works
Source Address: One North Broadway, Gary, IN 46402
Part 70 Permit No.: T089-29907-00121
Parameter: Cokonyx input
Limit: The input of Cokonyx to each of the following combinations of facilities shall be less than 300,000 tons per twelve (12) consecutive month period with compliance determined at the end of each month:

CASP A Cokonyx belt conveyors OR-A-08-CB1020 and OR-A-08-CB1030, CASP A Cokonyx belt conveyors OR-A-08-CB2020 and OR-A-08-CB2030,
CASP B Cokonyx belt conveyors OR-B-08-CB1020 and OR-B-08-CB1030, CASP B Cokonyx belt conveyors OR-B-08-CB2020 and OR-B-08-CB2030, CASP C Cokonyx belt conveyors OR-C-08-CB1020 and OR-C-08-CB1030, CASP C Cokonyx belt conveyors OR-C-08-CB2020 and OR-C-08-CB2030, CASP D Cokonyx belt conveyors OR-D-08-CB1020 and OR-D-08-CB1030, CASP D Cokonyx belt conveyors OR-D-08-CB2020 and OR-D-08-CB2030, CASP A vibratory feeders CASPA-VF1 and CASPA-VF2, CASP A emergency bypass bunkers CASPA-EB1 and CASPA-EB2, CASP A Cokonyx conveyors CKNXC-A1 and CKNXC-A2, CASP B vibratory feeders CASPB-VF1 and CASPB-VF2, CASP B emergency bypass bunkers CASPB-EB1 and CASPB-EB2, CASP B Cokonyx conveyors CKNXC-B1 and CKNXC-B2, CASP C vibratory feeders CASPC-VF1 and CASPC-VF2, CASP C emergency bypass bunkers CASPC-EB1 and CASPC-EB2, CASP C Cokonyx conveyors CKNXC-C1 and CKNXC-C2, CASP D vibratory feeders CASPD-VF1 and CASPD-VF2, CASP D emergency bypass bunkers CASPD-EB1 and CASPD-EB2, CASP D Cokonyx conveyors CKNXC-D1 and CKNXC-D2

FACILITY:_____ QUARTER: _____ YEAR: _____

Month	Material Input (tons)	Material Input (tons)	Material Input (tons)
	This Month	Previous 11 Months	12 Month Total
Month 1			
Month 2			
Month 3			

☐ No deviation occurred in this quarter.

☐ Deviation/s occurred in this quarter.
Deviation has been reported on: _____

Submitted by: _____

Title / Position: _____

Signature: _____

Date: _____

Phone: _____

INDIANA DEPARTMENT OF ENVIRONMENTAL MANAGEMENT
OFFICE OF AIR QUALITY
COMPLIANCE AND ENFORCEMENT BRANCH

Part 70 Quarterly Report

Source Name: U.S. Steel - Gary Works
Source Address: One North Broadway, Gary, IN 46402
Part 70 Permit No.: T089-29907-00121
Parameter: Cokonyx input
Limit: The input of Cokonyx to each of the following facilities shall be less than 600,000 tons per twelve (12) consecutive month period with compliance determined at the end of each month:

CASP A/B Emergency Storage Pile, CASP A & B - Cokonyx conveyor (CKNXC-A/B), CASP A & B - Cokonyx storage bins (CKNXBin-A/B), CASP C/D Emergency Storage Pile, CASP C & D - Cokonyx conveyor (CKNXC-C/D), CASP C & D- Cokonyx storage bins (CKNXBin-C/D)

FACILITY:_____ QUARTER: _____ YEAR: _____

Month	Material Input (tons)	Material Input (tons)	Material Input (tons)
	This Month	Previous 11 Months	12 Month Total
Month 1			
Month 2			
Month 3			

☐ No deviation occurred in this quarter.

☐ Deviation/s occurred in this quarter.
Deviation has been reported on: _____

Submitted by: _____

Title / Position: _____

Signature: _____

Date: _____

Phone: _____

INDIANA DEPARTMENT OF ENVIRONMENTAL MANAGEMENT
OFFICE OF AIR QUALITY
COMPLIANCE AND ENFORCEMENT BRANCH

Part 70 Quarterly Report

Source Name: U.S. Steel - Gary Works
Source Address: One North Broadway, Gary, IN 46402
Part 70 Permit No.: T089-29907-00121
Parameter: Cokonyx input
Limit: The input of Cokonyx to the Cokonyx loadout railcar shall be less than 1,200,000 tons per twelve (12) consecutive month period with compliance determined at the end of each month:

FACILITY:_____ QUARTER: _____ YEAR: _____

Month	Material Input (tons)	Material Input (tons)	Material Input (tons)
	This Month	Previous 11 Months	12 Month Total
Month 1			
Month 2			
Month 3			

☐ No deviation occurred in this quarter.

☐ Deviation/s occurred in this quarter.
Deviation has been reported on: _____

Submitted by: _____

Title / Position: _____

Signature: _____

Date: _____

Phone: _____

Fugitive Dust Plan

TABLE OF CONTENTS

1.0 Introduction 1
2.0 Description of Facilities 2
3.0 Identification of Facilities 3
3.1 Paved Roadways and Parking Lots 3
3.2 Unpaved Roadways and Parking Lots 3
3.3 Storage Piles 3
3.4 Other Material Handling Facilities 3
3.4.1 Blast Furnace Dustcatchers 3
3.4.2 Revert Coal and Coke Screening 4
3.4.3 Coal and Coke Handling 4
3.4.4 Destock Coke Screening 3
3.4.5 Raw Material Handling at the Sinter Plant 4
3.4.6 Ore Unloading 5
3.4.7 Mill Scale Recycling 5
3.4.8 B-Mix and B-Scrap Recycling 5
3.4.9 Unloading Burnt Lime and Dolomite 5
3.4.10 Baghouse Dust Disposal 6
3.4.11 Alloy Control 6
4.0 Control Measures 6
4.1 Paved Roadway Cleaning 6
4.2 Paved Parking Area Cleaning 6
4.3 Unpaved Roadway Treatment 6
4.4 Exposed Area Treatment 7
4.5 Material Storage Area Treatment 7
4.5.1 Sinter Plant Storage Pile Area 7
4.5.2 Coal Stockpile Delivery Management 7
4.5.3 Coal Storage Pile Areas 8
4.5.4 Coke Loading Station Transfers 8
4.6 Material Transfer and Inplant Transportation Control 8
4.6.1 Vehicle Speed Control 8
4.6.2 Inplant Transportation 8
4.7 Other control Measures 8
5.0 Conditions Preventing Use of Control Measures 9
5.1 Conditions for Paved Roads 9
5.2 Conditions for Unpaved Roadways and Areas and Storage Piles 9
6.0 Schedule for Achieving Compliance 10
6.1 Road Paving Program 10
6.2 Road Cleaning Program 10
6.3 Storage Pile, Material Handling and Transfer, and Exposed Area Treatment 10
6.4 Other Fugitive Dust Control Activities 10
7.0 Record Keeping and Reporting 11
7.1 Drawings Showing Controlled Emission Sources 11
7.2 Records of Water or Chemical Applications 11
7.3 Records of Eliminated or Delayed Treatments 11
7.4 Maintenance of Records 12
7.5 Quarterly Reports 12
7.6 Changing of Control Plan 12
8.0 Fugitive Emission Monitoring Program 12
8.1 Silt Sampling of Paved Road 12
8.2 Opacity Monitoring of Fugitive Emission Sources 13

1.0 INTRODUCTION

On May 12, 1993, The Indiana Department of Environmental Management (IDEM) promulgated rule 326 IAC 6-1-11.1, Lake County Fugitive Particulate Matter Control Requirements, placing it into effect 30 days later. This rule requires that affected sources submit a fugitive particulate control plan to reduce emissions of PM-10 (particulate matter with an aerodynamic diameter of 10 microns or less) from nontraditional sources of fugitive emissions. This plan must include a description of each nontraditional source, measurements of the parameters needed to estimate emissions from these sources, control measures and other work practices to be employed to limit PM-10 emissions from these sources, and conditions (i.e. rain, snow, high wind speeds, freezing conditions, etc.) that may prevent or delay routine implementation of some control measures.

In response to these regulations, Gary Works conducted field programs to quantify emissions of PM-10 generated by vehicular traffic on plant roadways, material handling and transfer activities, wind erosion of storage piles and open areas, and vehicular traffic entering and exiting parking lots. In order to quantify these emissions, samples of the particulate in parking lots and roadways were collected. Storage piles and open areas were also sampled. The opacity of PM-10 emissions from these nontraditional sources were also observed and recorded using the procedures set forth in 326 IAC 6-1-11.1. Gary Works recently updated the original survey. Roadways, storage piles, material transfer and handling activities, parking lots and exposed areas under the control of private contractors were not included in this study. The results of this survey and the quantification of nontraditional sources of fugitive emissions are presented in Figure 1. The background data used to estimate these emissions can be found in Appendix A**.**

The following sections contain the plan developed to control nontraditional fugitive particulate emissions at USS Gary Works. This plan updates the original plan submitted in 1993 and will be executed under the supervision of the USS Environmental Control Division, Gary Works, One North Broadway, Mail Station 70, Gary, Indiana 46402. Telephone number (219) 888-2339. This plan will be implemented on a year round basis except, when not required to do so under Section 5.0 – Conditions Preventing Use of Control Measures.

Areas of USS Gary Works which are under the control of independent contractors and companies will have separate particulate control plans and are not covered within the context of this particulate control plan. These contractors fall under 326 IAC 6-1-11.1 paragraph (a) (4). top↑

2.0 DESCRIPTION OF FACILITIES

USS Gary Works is a fully integrated steelmaking facility located on the southern shore of Lake Michigan in Gary, Indiana. The plant occupies an area approximately seven miles long and more than a mile wide. Landfill areas occupy the extreme eastern end of the plant property. The

Coke Plant and Sinter Plant are also located east of the Slip with the remainder of the Plant west of the slip. Roadways, storage piles, and most of the material handling operations that are the responsibility of Gary Works are identified in this plan. The blast furnace dustcatcher, coke screening, coal handling, raw material handling at the sinter plant, ore unloading, alloy control and other operations are described in paragraphs 3.3.1 through 3.3.11. top↑

3.0 IDENTIFICATION OF FACILITIES

3.1 Paved Roadways and Parking Lots

Drawings GW468068 and GW468069 show the locations of the existing paved roads and parking lots at USS Gary Works. Paved roadways and parking lots that require control measures specified by this plan are identified on these drawings.

3.2 Unpaved Roadways and Open Areas

Drawings GW468070 and GW468071 show the locations of existing unpaved roads and open areas at USS Gary Works. Unpaved roads and open areas that require control measures specified by this plan are identified on these drawings.

3.3 Storage Piles

The approximate locations of the various storage piles are identified on Gary Works drawings GW487814 and GW487815. Because of the transient nature of these storage piles, the exact pile locations may change but the general storage pile areas will remain the same. Load-in, load-out and screening operations are also transient and take place throughout the area.

3.4 Other Material Handling Facilities

The majority of material handling activities that have the potential to generate fugitive particulate are performed by outside contractors. Plant contractor locations and associated activities are identified on Gary Works drawings GW487814 and GW487815. Control of these emissions is the responsibility of the individual contractor and these activities are not included in this control plan. Material handling activities performed by USS are also identified on these drawings and are described below. Figure 2 lists USS material processing facilities and their associated control equipment as specified in 326 IAC 6-1-11.1. A general material process flow diagram can be found in Figure 3.

3.4.1 Blast Furnace Dustcatchers

The blast furnace dustcatchers are unloaded into trucks and hauled to the sinter plant storage area. Occasionally a truck may not be available and the content of the dustcatcher is discharged to the ground and a front-end loader transfers this material to the truck. Because the contents of the dustcatchers for blast furnaces 4, 6, and 8 are wetted in a slurry device with water and steam prior to discharge, emissions are normally negligible. If the dust binds in the dustcatcher and plugs the discharge port, significant emissions may result because the material is not thoroughly wetted in the slurry device.

The No. 13 blast furnace dust catcher unloads automatically on a regular cycle throughout the day. The dust is discharged from an intermediate chamber, which is sealed off from the dust catcher, therefore, the dust falls by gravity to a truck or to the ground and fugitive emissions are not significant. Front-end loaders are used to load material to trucks if on the ground.

3.4.2 Revert Coal & Coke Screening

The coal and coke screening operation sizes undersize material into three or more products. These screened products are recycled or sold. Except for periods when the wind speed is very high, no visible emissions are generated.

3.4.3 Coal and Coke Handling

Coal is transported to the plant by rail. Rail cars are unloaded to hoppers and then the coal is transported by covered conveyors to the coal handling facility where it is pulverized and blended. The blended coal is transferred by covered conveyor to the No. 5 and 7 coke batteries (wet-charged) or to the precarbon facilities and then to the No. 2 and 3 batteries.

After the coking process is completed, the coke is pushed into a quench car and transported to the quench tower. The quenched coke is then transferred to the coke wharf where further cooling takes place. The cooled coke slides down the sloped wharf onto a covered belt conveyor system where it is transferred to one of the three coke loading stations (2 & 3 loading station, No. 5 loading station and No. 6 loading station). The unscreened coke is transported by rail to the blast furnaces where it is unloaded, screened and subsequently charged to the blast furnaces.

3.4.4 Destock Coke Screening

Excess production or purchased coke is staged in a storage area at the east end of the plant. This coke is screened for size prior to use at the blast furnaces. A contractor currently performs this screening activity. Material not suitable for use is recycled or sold.

3.4.5 Raw Material Handling at the Sinter Plant

Waste and raw materials are transferred by truck from various areas of the plant to the Sinter Plant storage pile area. These materials are unloaded from the trucks onto specific storage piles. The material in these storage piles is then loaded into trucks by use of front-end loaders and transferred to one of the blending areas. The material is blended and then loaded into trucks and taken to the sinter plant where it is screened and loaded onto a conveyor. The conveyor transfers the screened material to the Sinter Plant storage bins where it is then fed to the sinter machines. The sinter product is transported by conveyor belt from the sinter plant to the highline sinter load-out bins. Transfer cars deposit the sinter into the appropriate blast furnace bins along the highline. Sinter is then drawn from the highline bins into a stockhouse scale car and then deposited into the blast furnace skips.

3.4.6 Ore Unloading

Pellets are received by bulk carriers and are transferred to a belt conveyor by self-unloaders. Pellets are transferred to a stockpile in the West Ore Yard by a conveyor-stacker or by ore bridge. The material is then handled by ore bridge and/or conveyor and deposited at the North or South pellet screening station. The screened pellets are fed by conveyor into the stockhouse of the No. 13 Blast Furnace.

Screened pellets from the south screening station are transported by conveyor to the blast furnace highline load-out bin. Transfer cars transport the pellets from the load-out bin to the appropriate blast furnace bins. The pellets are then drawn from the highline bins into a stockhouse scale car where they are weighed before being deposited into the blast furnace skips.

3.4.7 Mill Scale Recycling

Mill scale is transferred by truck from the 84-inch Hot Strip Mill and the continuous casters to the sinter plant storage area. This material is wet and is unloaded into storage piles prior to being transferred to the blending area.

3.4.8 B-Mix and B-Scrap Recycling

B-Mix and B-Scrap are processed by slag contractors at several locations in the plant. The material is screened, loaded into trucks and transported to the north and south ends of the West Ore Yard on an alternating sequence. The material is then handled by ore bridge and deposited into highline transfer cars. The transfer cars transport the B-Mix or B-Scrap to the appropriate blast furnace highline bins. The material is then drawn from the highline bins into a stockhouse scale car and deposited into the blast furnace skips.

3.4.9 Unloading Burnt Lime and Dolomite

Burnt lime for the No. 1 BOP Shop is unloaded from rail cars at the flux unloading station east of the shop. The railcar is positioned over an underground storage bin and the lime is discharged from the hopper beneath the car into the storage bin. The burnt lime is transferred from the storage bin by covered conveyor to the highline storage bins inside the BOP Shop. The lime is then drawn from the storage bins into the furnace hopper.

Pulverized lime and pebble sized dolomite are both used as fluxing agents at the No. 2 Q-BOP. Pulverized lime is delivered to the flux unloading station south of the Q-BOP in railroad cars. The lime is unloaded through hoppers at the bottom of the cars by introducing low-pressure air into the hoppers so that the lime is fluidized and flows freely into an underground storage bin. The lime is then transferred pneumatically via a 12-inch steel pipe from the bottom of the storage bin to the day storage tank. The day storage tank is located north of the unloading building and holds enough lime to supply the Q-BOP Shop for one day. The lime is again transferred pneumatically from the day tank to three intermediate bins inside the Q-BOP Shop. The lime in the intermediate bins is transferred to the weigh tank by a short air slide. The powdered lime leaving the weigh tank is injected with oxygen through the tuyeres.

Dolomite is unloaded from rail cars or trucks into underground bins at the unloading house. A conveyor that starts 20-feet underground moves the dolomite to the Q-BOP transfer tower and another conveyor transfers the material to the flux floor. From the flux floor another conveyor moves the dolomite to the inside storage bins. The dolomite is then drawn from the bins to the weigh hoppers.

3.4.10 Baghouse Dust Disposal

Particulate from the many baghouses located at the Gary Works are trucked to the appropriate facility for recycle, disposal onsite or offsite. Figure 2 identifies the plant dust control equipment and the disposition of the collected particulate.

3.4.11 Alloy Control

Alloys used for additions during steel making are screened and stored in small piles prior to use. These alloys are loaded by front-end loaders into trucks and transported to the appropriate facility. top↑

4.0 CONTROL MEASURES

4.1 Paved Roadway Cleaning

Paved roadways within USS Gary Works will be cleaned by using high pressure water flushing and/or vacuum sweeping. The planned cleaning frequency of each paved road segment along with the segment length is listed in Table 1. This frequency may be temporarily or permanently modified if the emissions limitation specified in 326 IAC 6-1-11.1 is exceeded and/or the road silt loading is excessive. Gary Works drawings nos. GW468068 & GW468069 identify paved roadways that require control measures in the plant.

4.2 Paved Parking Area Cleaning

Paved parking areas may be high pressure water flushed and/or vacuum swept to prevent visible particulate emissions from vehicular traffic. Identified lots will be cleaned on as needed basis determined by an opacity-based mechanism where parking areas will be monitored using procedures described in 326 IAC 6-1-11.1. The paved parking areas eligible for control measures are listed in Table 2. Gary Works drawings nos. GW468068 & GW468069 identify lot locations in the plant.

4.3 Unpaved Roadway Treatment

All unpaved roadways listed below in Table 3 are identified on Gary works drawings GW468070 & GW468071 and will be treated with a commercially produced chemical dust suppressant specifically manufactured for that purpose. Application rates and frequencies will be consistent with the manufacturers recommendations to achieve the degree of control required to meet the

applicable emission limitation. At times, recommended application rates may be too high to be absorbed by the roadway in one step. In that case, application will be adjusted in dust suppressant concentration and frequency to ensure proper control of particulate emissions per 326 IAC 6-1-11.1. As an alternative USS may pave previously unpaved road sections and apply paved road cleaning measures to these newly paved roads at frequencies consistent with the existing paved roads in the immediate area.

Gary Works currently uses an asphalt based emulsion dust suppressant to control particulate emissions from unpaved roadways. A material data safety sheet (MSDS) for the current dust suppressant can be found in Appendix B. The minimum application frequencies are shown in Table 4. Note: Contractors are responsible for the treatment of roadways under their control.

4.4 Exposed Area Treatment

Unpaved open areas without roadway designations may require treatment to reduce windblown emissions or to prevent visible emissions from vehicular traffic that utilize these areas. Gary Works will commit to the opacity-based mechanism of the average instantaneous opacity of 10% as described in 326 IAC 6-1-11.1. Application of dust suppressant chemical will be done at a frequency and application rate to effectively control fugitive dust to the above stated opacity limitation. Table 5 lists unpaved open areas currently controlled by chemical dust suppressants at Gary Works and drawings nos. GW468070 and GW468071 show their locations. In addition to chemical treatment, selected open areas have been seeded with vegetation to inhibit the generation of fugitive dust. Current plans are to continue vegetating areas to prevent dust generation in open areas. Note: Contractors are responsible for the treatment of unpaved open areas under their control.

4.5 Material Storage Area Treatment

4.5.1 Sinter Plant Storage Pile Area

Measures to control fugitive emissions generated by mechanical disturbance and wind erosion of the storage piles in the sinter plant area are limited to water spraying, because by specification, hydrocarbon compounds like those contained in the dust suppressant chemicals are strictly limited in the burden materials. This area will be routinely sprayed with water at a rate and frequency necessary to achieve compliance with the applicable emissions limitation.

4.5.2 Coal Stockpile and Delivery Management

Coal stockpile management focuses on the reduction of inventory and land used for coal storage. Coal deliveries are scheduled to maximize availability to utilize coal directly as efficiently as possible. Adherence to shipping schedule is a priority for all concerned parties involved including coal suppliers, railroads and USS.

4.5.3 Coal Storage Pile Areas

A dust suppressant will be applied to coal storage piles, April through November, on an as needed basis to meet the opacity limitation specified in 326 IAC 6-1-11.1. The material safety data sheet for the currently used dust suppressant can be found in Appendix B.

4.5.4 Coke Loading Station Transfers

Coke is transferred to the blast furnaces via three loading stations located at the coke plant. A dust suppressant will be applied at these loading stations should this material transfer activity generate excessive fugitive particulate emissions as specified in 326 IAC 6-1-11.1. The material safety data sheet for the currently used dust suppressant can be found in Appendix B.

4.6 Material Transfer and Inplant Transportation Control

4.6.1 Vehicle Speed Control

All plant roads shall have posted 20 mph speed limits with a few exceptions dependent upon location and utilization. Enforcement of these posted speed limits shall be the responsibility of the various plant security forces who will employ security vehicles and radar.

4.6.2 Inplant Transportation

Inplant transportation of material by truck will be carried out in such a manner that meets the opacity standard found in 326 IAC 6-1-11.1 (d)(6). Material transported by rail or trucks that generate visible particulate emissions will be covered to meet the applicable emission limit.

4.7 Other control Measures

Gary Works has a program to evaluate and improve paved and unpaved roads on an as needed basis when funds are available.

Vacuum sweeping or flushing on paved roads will continue and the unpaved shoulders of the more heavily traveled roads will be treated with a dust suppressant.

The use of open areas as roadways creates a dust problem because vehicles may veer off paved roads to travel on exposed open areas and can track dust onto paved road surfaces. In addition, in some parts of the plant, vehicles can travel in and out of material processing areas although alternate routes can be taken. In order to limit the use of open areas as roadways and reduce the volume of traffic in material processing areas, signs and concrete barriers may be used to redirect traffic at selected locations. The placement of signs and concrete barriers will be coordinated with knowledgeable plant personnel. After the signs and barriers are in place, additional traffic control measures will be evaluated that will further limit the generation of fugitive dust.

As an alternative to eliminate treatment, selected exposed areas may be seeded with an appropriate ground cover to limit or eliminate the generation of fugitive particulate. The type of

ground cover to be established will be appropriate to the soil and climatic conditions at the Gary Works, and will be self-sustaining. top↑

5.0 CONDITIONS PREVENTING USE OF CONTROL MEASURES

Under the following set of conditions, USS Gary Works will not perform the control measures as listed above.

5.1 Conditions for Paved Roads

The cleaning of paved road segments may be delayed when:

- It is raining or snowing at the time of the scheduled cleaning.
- Rain of 0.1 or more inches or 0.5 inches or more of snow has accumulated during the 24-hour period prior to the scheduled cleaning.
- The temperature is below 32ºF at the scheduled time of cleaning, use of high pressure water flushing will be discontinued due to the potential for ice buildup on roadways.
- The road segment is closed or abandoned. Abandoned roads will be barricaded to prevent vehicle access.
- Treatment is not required because the roadway meets the opacity limitation specified in 326 IAC 6-1-11.1.

In the event that consecutive rain or snow days create a condition where a severe backlog of road segments to be cleaned exists, USS will make a reasonable effort to eliminate this backlog as soon as conditions permit.

5.2 Conditions for Unpaved Roadways and Areas and Storage Piles

The treating of unpaved road segments, unpaved areas, or storage piles may be delayed when:

- It is raining or snowing at the time of the scheduled treatment.
- Greater than 0.1 inches of rain or 0.5 inches of snow has accumulated during the 24-hour period prior to the scheduled treatment.

- Road segments, areas, or piles are saturated with water such that chemical dust suppressants cannot be accepted by the surface.

- Road segments, areas, or piles are frozen or covered by ice, snow or standing water.

- The road segment or area is closed or abandoned. Abandoned roads will be barricaded.

- Treatment is not required because the unpaved road or open area meets the opacity limitation specified in 326 IAC 6-1-11.1.

- Sustained wind speeds are excessive.

The treatment of exposed areas and storage piles may be temporarily suspended during periods when excessive wind speeds would result in ineffective or wasteful chemical use. top↑

6.0 SCHEDULE FOR ACHIEVING COMPLIANCE

6.1 Road Paving Program

Road paving and repairing is an ongoing program at the plant. It is expected that the paving of unpaved roads, and paved roads in poor condition, will continue.

6.2 Road Cleaning Program

The road cleaning program was implemented on January 1, 1994, and continues.

6.3 Storage Pile, Material Handling & Transfer, and Exposed Area Treatment

The treatment of storage piles, material handling and transfer activities, and exposed areas was implemented on January 1, 1994, and continues.

6.4 Other Fugitive Dust Control Activities

Other fugitive dust control measures as described in Section 4.7 will continue. top↑

7.0 RECORD KEEPING AND REPORTING

7.1 Drawings Showing Controlled Emission Sources

The drawings showing the locations of the controlled roadways, parking lots, storage piles, open areas, and material handling will be kept in the Environmental Control Division Office. Drawings will also be maintained showing the locations of all areas under the control of outside contractors at USS Gary Works.

7.2 Records of Water or Chemical Applications

Records will be kept on file of all sweeping and flushing and chemical treatments that are performed on the fugitive dust sources covered by this control plan. These forms will be kept in the Environmental Compliance, Energy and Environmental Control Division Office. The following information will be contained on the form:

- The name and location of the roadway, area, or pile controlled.
- The application rate.
- The time of each application.
- The area covered by each application.
- Identification of each method of application.
- The total quantity of water or chemical used for each application.
- For each application of chemical solution, the concentration and identity of the chemical.

If special physical or chemical treatment occurs on an area or facility within the plant as specified in 326 IAC 6-1-11.1 part (e), paragraph (4)(C), the following information will be provided in the log:

- The name of the physical or chemical agent used.
- The location of the application,
- The application rate.
- The total quantity of agent used.
- If the agent was diluted, the percent of concentration.

7.3 Records of Eliminated or Delayed Treatments

A log will be maintained for the reporting of incidents that prevent the application of control measures. For each incident, the date along with a specific explanation as to why the control measures were not implemented will be provided. This notation should also include any necessary corrective action to be taken.

7.4 Maintenance of Records

A section will be established within the Environmental Control Division Office for the Storage of five (5) years of records pertaining to fugitive particulate control measures. Copies of all records required will be submitted to IDEM within twenty (20) working days upon written request. These records will be available for inspection and copying by IDEM department representatives during normal working hours.

7.5 Quarterly Reports

A quarterly report will be submitted by the Environmental Control Division Office containing the following information:

- The dates on which any of the required control measures were not implemented.
- A listing of the above control measures.
- The reasons that the control measures were not implemented.
- Any corrective action taken, that may be necessary.

This report will be submitted to the IDEM within 30 calendar days after the end of the quarter. The quarters end on March 31, June 30, September 30, and December 31.

7.6 Changing of Control Plan

The plan administrator will review and update the plan as necessary. A copy of the revised plan will be provided to IDEM upon request. The plan will also be revised if IDEM determines that the requirements of the control plan have not been met and requests such revisions in writing. The plan will also be revised if a significant change occurs on a road, area, or transfer procedure which would make the current control measure obsolete, such as an unpaved road being paved. top↑

8.0 FUGITIVE EMISSION MONITORING PROGRAM

8.1 Silt Sampling of Paved Road

If requested by IDEM, USS Gary Works will provide representative silt loading measurements for a maximum of ten paved roads per month during the months of April through November. Silt loadings will be measured in accordance with the procedures provided in the Rule. IDEM will have the right to specify the road segments to be sampled.

8.2 Opacity Monitoring of Fugitive Emission Sources

A visible emission based mechanism as described in 326 IAC 6-1-11.1 (d)(1-9) will be used to determine the effectiveness of this treatment program. Opacity readings will be taken one day per month of paved and unpaved roads, parking lots, material handling, processing, transfer activities, wind erosion of storage piles and exposed areas during the months of April through November. Opacity readings will help to determine the effectiveness of the program and identify areas where corrective action may be necessary to maintain compliance. top↑

LIST OF DRAWINGS

GW468068 - Paved Roadways and Paved Parking Lots (West)
GW468069 - Paved Roadways and Paved Parking Lots (East)
GW468070 - Unpaved Roadways and Open Areas (West)
GW468071 - Unpaved Roadways and Open Areas (East)
GW487814 - Storage Piles and Material Handling (West)
GW487815 - Storage Piles and Material Handling (East)

TABLES

Table 1 - Paved Roads
Table 2 - Paved Parking Lots
Table 3 - Unpaved Roads
Table 4 - Control Levels of Applications to Unpaved Roads
Table 5 - Unpaved Open Areas

APPENDICES

Appendix A (Background Data for Estimating Particulate Emissions) top↑
A roads
B roads
C roads
D roads
E roads
Fugitives
Material handling
Modeling Area Designations
Outdoor storage piles
Road Segments

Appendix B (Material Safety Data Sheets for Dust Suppressants) top↑
Asphotac 18883 MSDS
EC-46 MSDS
PetroTac MSDS

Attachment B
To Part 70 Operating Permit Renewal No. T089-29907-00121

[Downloaded from the eCFR on May 13, 2013]

Electronic Code of Federal Regulations

Title 40: Protection of Environment

Subpart Dc—Standards of Performance for Small Industrial-Commercial-Institutional Steam Generating Units

Source: 72 FR 32759, June 13, 2007, unless otherwise noted.

§ 60.40c Applicability and delegation of authority.

(a) Except as provided in paragraphs (d), (e), (f), and (g) of this section, the affected facility to which this subpart applies is each steam generating unit for which construction, modification, or reconstruction is commenced after June 9, 1989 and that has a maximum design heat input capacity of 29 megawatts (MW) (100 million British thermal units per hour (MMBtu/h)) or less, but greater than or equal to 2.9 MW (10 MMBtu/h).

(b) In delegating implementation and enforcement authority to a State under section 111(c) of the Clean Air Act, § 60.48c(a)(4) shall be retained by the Administrator and not transferred to a State.

(c) Steam generating units that meet the applicability requirements in paragraph (a) of this section are not subject to the sulfur dioxide (SO_2) or particulate matter (PM) emission limits, performance testing requirements, or monitoring requirements under this subpart (§§ 60.42c, 60.43c, 60.44c, 60.45c, 60.46c, or 60.47c) during periods of combustion research, as defined in § 60.41c.

(d) Any temporary change to an existing steam generating unit for the purpose of conducting combustion research is not considered a modification under § 60.14.

(e) Affected facilities (*i.e.* heat recovery steam generators and fuel heaters) that are associated with stationary combustion turbines and meet the applicability requirements of subpart KKKK of this part are not subject to this subpart. This subpart will continue to apply to all other heat recovery steam generators, fuel heaters, and other affected facilities that are capable of combusting more than or equal to 2.9 MW (10 MMBtu/h) heat input of fossil fuel but less than or equal to 29 MW (100 MMBtu/h) heat input of fossil fuel. If the heat recovery steam generator, fuel heater, or other affected facility is subject to this subpart, only emissions resulting from combustion of fuels in the steam generating unit are subject to this subpart. (The stationary combustion turbine emissions are subject to subpart GG or KKKK, as applicable, of this part.)

(f) Any affected facility that meets the applicability requirements of and is subject to subpart AAAA or subpart CCCC of this part is not subject to this subpart.

(g) Any facility that meets the applicability requirements and is subject to an EPA approved State or Federal section 111(d)/129 plan implementing subpart BBBB of this part is not subject to this subpart.

(h) Affected facilities that also meet the applicability requirements under subpart J or subpart Ja of this part are subject to the PM and NO_X standards under this subpart and the SO_2 standards under subpart J or subpart Ja of this part, as applicable.

(i) Temporary boilers are not subject to this subpart.

[72 FR 32759, June 13, 2007, as amended at 74 FR 5090, Jan. 28, 2009; 77 FR 9461, Feb. 16, 2012]

§ 60.41c Definitions.

As used in this subpart, all terms not defined herein shall have the meaning given them in the Clean Air Act and in subpart A of this part.

Annual capacity factor means the ratio between the actual heat input to a steam generating unit from an individual fuel or combination of fuels during a period of 12 consecutive calendar months and the potential heat input to the steam generating unit from all fuels had the steam generating unit been operated for 8,760 hours during that 12-month period at the maximum design heat input capacity. In the case of steam generating units that are rented or leased, the actual heat input shall be determined based on the combined heat input from all operations of the affected facility during a period of 12 consecutive calendar months.

Coal means all solid fuels classified as anthracite, bituminous, subbituminous, or lignite by the American Society of Testing and Materials in ASTM D388 (incorporated by reference, see § 60.17), coal refuse, and petroleum coke. Coal-derived synthetic fuels derived from coal for the purposes of creating useful heat, including but not limited to solvent refined coal, gasified coal not meeting the definition of natural gas, coal-oil mixtures, and coal-water mixtures, are also included in this definition for the purposes of this subpart.

Coal refuse means any by-product of coal mining or coal cleaning operations with an ash content greater than 50 percent (by weight) and a heating value less than 13,900 kilojoules per kilogram (kJ/kg) (6,000 Btu per pound (Btu/lb) on a dry basis.

Combined cycle system means a system in which a separate source (such as a stationary gas turbine, internal combustion engine, or kiln) provides exhaust gas to a steam generating unit.

Combustion research means the experimental firing of any fuel or combination of fuels in a steam generating unit for the purpose of conducting research and development of more efficient combustion or more effective prevention or control of air pollutant emissions from combustion, provided that, during these periods of research and development, the heat generated is not used for any purpose other than preheating combustion air for use by that steam generating unit (*i.e.* , the heat generated is released to the atmosphere without being used for space heating, process heating, driving pumps, preheating combustion air for other units, generating electricity, or any other purpose).

Conventional technology means wet flue gas desulfurization technology, dry flue gas desulfurization technology, atmospheric fluidized bed combustion technology, and oil hydrodesulfurization technology.

Distillate oil means fuel oil that complies with the specifications for fuel oil numbers 1 or 2, as defined by the American Society for Testing and Materials in ASTM D396 (incorporated by reference, see § 60.17), diesel fuel oil numbers 1 or 2, as defined by the American Society for Testing and Materials in ASTM D975 (incorporated by reference, see § 60.17), kerosine, as defined by the American Society of Testing and Materials in ASTM D3699 (incorporated by reference, see § 60.17), biodiesel as defined by the American Society of Testing and Materials in ASTM D6751 (incorporated by reference, see § 60.17), or biodiesel blends as defined by the American Society of Testing and Materials in ASTM D7467 (incorporated by reference, see § 60.17).

Dry flue gas desulfurization technology means a SO_2 control system that is located between the steam generating unit and the exhaust vent or stack, and that removes sulfur oxides from the combustion gases of the steam generating unit by contacting the combustion gases with an alkaline reagent and water, whether introduced separately or as a premixed slurry or solution and forming a dry powder material. This definition includes devices where the dry powder material is subsequently converted to another form. Alkaline reagents used in dry flue gas desulfurization systems include, but are not limited to, lime and sodium compounds.

Duct burner means a device that combusts fuel and that is placed in the exhaust duct from another source (such as a stationary gas turbine, internal combustion engine, kiln, etc.) to allow the firing of additional fuel to heat the exhaust gases before the exhaust gases enter a steam generating unit.

Emerging technology means any SO_2 control system that is not defined as a conventional technology under this section, and for which the owner or operator of the affected facility has received approval from the Administrator to operate as an emerging technology under § 60.48c(a)(4).

Federally enforceable means all limitations and conditions that are enforceable by the Administrator, including the requirements of 40 CFR parts 60 and 61, requirements within any applicable State implementation plan, and any permit requirements established under 40 CFR 52.21 or under 40 CFR 51.18 and 51.24.

Fluidized bed combustion technology means a device wherein fuel is distributed onto a bed (or series of beds) of limestone aggregate (or other sorbent materials) for combustion; and these materials are forced upward in the device by the flow of combustion air and the gaseous products of combustion. Fluidized bed combustion technology includes, but is not limited to, bubbling bed units and circulating bed units.

Fuel pretreatment means a process that removes a portion of the sulfur in a fuel before combustion of the fuel in a steam generating unit.

Heat input means heat derived from combustion of fuel in a steam generating unit and does not include the heat derived from preheated combustion air, recirculated flue gases, or exhaust gases from other sources (such as stationary gas turbines, internal combustion engines, and kilns).

Heat transfer medium means any material that is used to transfer heat from one point to another point.

Maximum design heat input capacity means the ability of a steam generating unit to combust a stated maximum amount of fuel (or combination of fuels) on a steady state basis as determined by the physical design and characteristics of the steam generating unit.

Natural gas means:

(1) A naturally occurring mixture of hydrocarbon and nonhydrocarbon gases found in geologic formations beneath the earth's surface, of which the principal constituent is methane; or

(2) Liquefied petroleum (LP) gas, as defined by the American Society for Testing and Materials in ASTM D1835 (incorporated by reference, see § 60.17); or

(3) A mixture of hydrocarbons that maintains a gaseous state at ISO conditions. Additionally, natural gas must either be composed of at least 70 percent methane by volume or have a gross calorific value between 34 and 43 megajoules (MJ) per dry standard cubic meter (910 and 1,150 Btu per dry standard cubic foot).

Noncontinental area means the State of Hawaii, the Virgin Islands, Guam, American Samoa, the Commonwealth of Puerto Rico, or the Northern Mariana Islands.

Oil means crude oil or petroleum, or a liquid fuel derived from crude oil or petroleum, including distillate oil and residual oil.

Potential sulfur dioxide emission rate means the theoretical SO_2 emissions (nanograms per joule (ng/J) or lb/MMBtu heat input) that would result from combusting fuel in an uncleaned state and without using emission control systems.

Process heater means a device that is primarily used to heat a material to initiate or promote a chemical reaction in which the material participates as a reactant or catalyst.

Residual oil means crude oil, fuel oil that does not comply with the specifications under the definition of distillate oil, and all fuel oil numbers 4, 5, and 6, as defined by the American Society for Testing and Materials in ASTM D396 (incorporated by reference, see § 60.17).

Steam generating unit means a device that combusts any fuel and produces steam or heats water or heats any heat transfer medium. This term includes any duct burner that combusts fuel and is part of a combined cycle system. This term does not include process heaters as defined in this subpart.

Steam generating unit operating day means a 24-hour period between 12:00 midnight and the following midnight during which any fuel is combusted at any time in the steam generating unit. It is not necessary for fuel to be combusted continuously for the entire 24-hour period.

Temporary boiler means a steam generating unit that combusts natural gas or distillate oil with a potential SO_2 emissions rate no greater than 26 ng/J (0.060 lb/MMBtu), and the unit is designed to, and is capable of, being carried or moved from one location to another by means of, for example, wheels, skids, carrying handles, dollies, trailers, or platforms. A steam generating unit is not a temporary boiler if any one of the following conditions exists:

(1) The equipment is attached to a foundation.

(2) The steam generating unit or a replacement remains at a location for more than 180 consecutive days. Any temporary boiler that replaces a temporary boiler at a location and performs the same or similar function will be included in calculating the consecutive time period.

(3) The equipment is located at a seasonal facility and operates during the full annual operating period of the seasonal facility, remains at the facility for at least 2 years, and operates at that facility for at least 3 months each year.

(4) The equipment is moved from one location to another in an attempt to circumvent the residence time requirements of this definition.

Wet flue gas desulfurization technology means an SO_2 control system that is located between the steam generating unit and the exhaust vent or stack, and that removes sulfur oxides from the combustion gases of the steam generating unit by contacting the combustion gases with an alkaline slurry or solution and forming a liquid material. This definition includes devices where the liquid material is subsequently converted to another form. Alkaline reagents used in wet flue gas desulfurization systems include, but are not limited to, lime, limestone, and sodium compounds.

Wet scrubber system means any emission control device that mixes an aqueous stream or slurry with the exhaust gases from a steam generating unit to control emissions of PM or SO_2 .

Wood means wood, wood residue, bark, or any derivative fuel or residue thereof, in any form, including but not limited to sawdust, sanderdust, wood chips, scraps, slabs, millings, shavings, and processed pellets made from wood or other forest residues.

[72 FR 32759, June 13, 2007, as amended at 74 FR 5090, Jan. 28, 2009; 77 FR 9461, Feb. 16, 2012]

§ 60.42c Standard for sulfur dioxide (SO2).

(a) Except as provided in paragraphs (b), (c), and (e) of this section, on and after the date on which the performance test is completed or required to be completed under § 60.8, whichever date comes first, the owner or operator of an affected facility that combusts only coal shall neither: cause to be discharged into the atmosphere from the affected facility any gases that contain SO_2 in excess of 87 ng/J (0.20 lb/MMBtu) heat input or 10 percent (0.10) of the potential SO_2 emission rate (90 percent reduction), nor cause to be discharged into the atmosphere from the affected facility any gases that contain SO_2 in excess of 520 ng/J (1.2 lb/MMBtu) heat input. If coal is combusted with other fuels, the affected facility shall neither: cause to be discharged into the atmosphere from the affected facility any gases that contain SO_2 in excess of 87 ng/J (0.20 lb/MMBtu) heat input or 10 percent (0.10) of the potential SO_2 emission rate (90 percent reduction), nor cause to be discharged into the atmosphere from the affected facility any gases that contain SO_2 in excess of the emission limit is determined pursuant to paragraph (e)(2) of this section.

(b) Except as provided in paragraphs (c) and (e) of this section, on and after the date on which the performance test is completed or required to be completed under § 60.8, whichever date comes first, the owner or operator of an affected facility that:

(1) Combusts only coal refuse alone in a fluidized bed combustion steam generating unit shall neither:

(i) Cause to be discharged into the atmosphere from that affected facility any gases that contain SO_2 in excess of 87 ng/J (0.20 lb/MMBtu) heat input or 20 percent (0.20) of the potential SO_2 emission rate (80 percent reduction); nor

(ii) Cause to be discharged into the atmosphere from that affected facility any gases that contain SO_2 in excess of SO_2 in excess of 520 ng/J (1.2 lb/MMBtu) heat input. If coal is fired with coal refuse, the affected facility subject to paragraph (a) of this section. If oil or any other fuel (except coal) is fired with coal refuse, the affected facility is subject to the 87 ng/J (0.20 lb/MMBtu) heat input SO_2 emissions limit or the 90 percent SO_2 reduction requirement specified in paragraph (a) of this section and the emission limit is determined pursuant to paragraph (e)(2) of this section.

(2) Combusts only coal and that uses an emerging technology for the control of SO_2 emissions shall neither:

(i) Cause to be discharged into the atmosphere from that affected facility any gases that contain SO_2 in excess of 50 percent (0.50) of the potential SO_2 emission rate (50 percent reduction); nor

(ii) Cause to be discharged into the atmosphere from that affected facility any gases that contain SO_2 in excess of 260 ng/J (0.60 lb/MMBtu) heat input. If coal is combusted with other fuels, the affected facility is subject to the 50 percent SO_2 reduction requirement specified in this paragraph and the emission limit determined pursuant to paragraph (e)(2) of this section.

(c) On and after the date on which the initial performance test is completed or required to be completed under § 60.8, whichever date comes first, no owner or operator of an affected facility that combusts coal, alone or in combination with any other fuel, and is listed in paragraphs (c)(1), (2), (3), or (4) of this section shall cause to be discharged into the atmosphere from that affected facility any gases that contain SO_2 in excess of the emission limit determined pursuant to paragraph (e)(2) of this section. Percent reduction requirements are not applicable to affected facilities under paragraphs (c)(1), (2), (3), or (4).

(1) Affected facilities that have a heat input capacity of 22 MW (75 MMBtu/h) or less;

(2) Affected facilities that have an annual capacity for coal of 55 percent (0.55) or less and are subject to a federally enforceable requirement limiting operation of the affected facility to an annual capacity factor for coal of 55 percent (0.55) or less.

(3) Affected facilities located in a noncontinental area; or

(4) Affected facilities that combust coal in a duct burner as part of a combined cycle system where 30 percent (0.30) or less of the heat entering the steam generating unit is from combustion of coal in the duct burner and 70 percent (0.70) or more of the heat entering the steam generating unit is from exhaust gases entering the duct burner.

(d) On and after the date on which the initial performance test is completed or required to be completed under § 60.8, whichever date comes first, no owner or operator of an affected facility that combusts oil shall cause to be discharged into the atmosphere from that affected facility any gases that contain SO_2 in excess of 215 ng/J (0.50 lb/MMBtu) heat input from oil; or, as an alternative, no owner or operator of an affected facility that combusts oil shall combust oil in the affected facility that contains greater than 0.5 weight percent sulfur. The percent reduction requirements are not applicable to affected facilities under this paragraph.

(e) On and after the date on which the initial performance test is completed or required to be completed under § 60.8, whichever date comes first, no owner or operator of an affected facility that combusts coal, oil, or coal and oil with any other fuel shall cause to be discharged into the atmosphere from that affected facility any gases that contain SO_2 in excess of the following:

(1) The percent of potential SO_2 emission rate or numerical SO_2 emission rate required under paragraph (a) or (b)(2) of this section, as applicable, for any affected facility that

(i) Combusts coal in combination with any other fuel;

(ii) Has a heat input capacity greater than 22 MW (75 MMBtu/h); and

(iii) Has an annual capacity factor for coal greater than 55 percent (0.55); and

(2) The emission limit determined according to the following formula for any affected facility that combusts coal, oil, or coal and oil with any other fuel:

$$E_s = \frac{(K_a H_a + K_b H_b + K_c H_c)}{(H_a + H_b + H_c)}$$

Where:

E_s = SO_2 emission limit, expressed in ng/J or lb/MMBtu heat input;

K_a = 520 ng/J (1.2 lb/MMBtu);

K_b = 260 ng/J (0.60 lb/MMBtu);

K_c = 215 ng/J (0.50 lb/MMBtu);

H_a = Heat input from the combustion of coal, except coal combusted in an affected facility subject to paragraph (b)(2) of this section, in Joules (J) [MMBtu];

H_b = Heat input from the combustion of coal in an affected facility subject to paragraph (b)(2) of this section, in J (MMBtu); and

H_c = Heat input from the combustion of oil, in J (MMBtu).

(f) Reduction in the potential SO_2 emission rate through fuel pretreatment is not credited toward the percent reduction requirement under paragraph (b)(2) of this section unless:

(1) Fuel pretreatment results in a 50 percent (0.50) or greater reduction in the potential SO_2 emission rate; and

(2) Emissions from the pretreated fuel (without either combustion or post-combustion SO_2 control) are equal to or less than the emission limits specified under paragraph (b)(2) of this section.

(g) Except as provided in paragraph (h) of this section, compliance with the percent reduction requirements, fuel oil sulfur limits, and emission limits of this section shall be determined on a 30-day rolling average basis.

(h) For affected facilities listed under paragraphs (h)(1), (2), (3), or (4) of this section, compliance with the emission limits or fuel oil sulfur limits under this section may be determined based on a certification from the fuel supplier, as described under § 60.48c(f), as applicable.

(1) Distillate oil-fired affected facilities with heat input capacities between 2.9 and 29 MW (10 and 100 MMBtu/hr).

(2) Residual oil-fired affected facilities with heat input capacities between 2.9 and 8.7 MW (10 and 30 MMBtu/hr).

(3) Coal-fired affected facilities with heat input capacities between 2.9 and 8.7 MW (10 and 30 MMBtu/h).

(4) Other fuels-fired affected facilities with heat input capacities between 2.9 and 8.7 MW (10 and 30 MMBtu/h).

(i) The SO_2 emission limits, fuel oil sulfur limits, and percent reduction requirements under this section apply at all times, including periods of startup, shutdown, and malfunction.

(j) For affected facilities located in noncontinental areas and affected facilities complying with the percent reduction standard, only the heat input supplied to the affected facility from the combustion of coal and oil is counted under this

section. No credit is provided for the heat input to the affected facility from wood or other fuels or for heat derived from exhaust gases from other sources, such as stationary gas turbines, internal combustion engines, and kilns.

[72 FR 32759, June 13, 2007, as amended at 74 FR 5090, Jan. 28, 2009; 77 FR 9462, Feb. 16, 2012]

§ 60.43c Standard for particulate matter (PM).

(a) On and after the date on which the initial performance test is completed or required to be completed under § 60.8, whichever date comes first, no owner or operator of an affected facility that commenced construction, reconstruction, or modification on or before February 28, 2005, that combusts coal or combusts mixtures of coal with other fuels and has a heat input capacity of 8.7 MW (30 MMBtu/h) or greater, shall cause to be discharged into the atmosphere from that affected facility any gases that contain PM in excess of the following emission limits:

(1) 22 ng/J (0.051 lb/MMBtu) heat input if the affected facility combusts only coal, or combusts coal with other fuels and has an annual capacity factor for the other fuels of 10 percent (0.10) or less.

(2) 43 ng/J (0.10 lb/MMBtu) heat input if the affected facility combusts coal with other fuels, has an annual capacity factor for the other fuels greater than 10 percent (0.10), and is subject to a federally enforceable requirement limiting operation of the affected facility to an annual capacity factor greater than 10 percent (0.10) for fuels other than coal.

(b) On and after the date on which the initial performance test is completed or required to be completed under § 60.8, whichever date comes first, no owner or operator of an affected facility that commenced construction, reconstruction, or modification on or before February 28, 2005, that combusts wood or combusts mixtures of wood with other fuels (except coal) and has a heat input capacity of 8.7 MW (30 MMBtu/h) or greater, shall cause to be discharged into the atmosphere from that affected facility any gases that contain PM in excess of the following emissions limits:

(1) 43 ng/J (0.10 lb/MMBtu) heat input if the affected facility has an annual capacity factor for wood greater than 30 percent (0.30); or

(2) 130 ng/J (0.30 lb/MMBtu) heat input if the affected facility has an annual capacity factor for wood of 30 percent (0.30) or less and is subject to a federally enforceable requirement limiting operation of the affected facility to an annual capacity factor for wood of 30 percent (0.30) or less.

(c) On and after the date on which the initial performance test is completed or required to be completed under § 60.8, whichever date comes first, no owner or operator of an affected facility that combusts coal, wood, or oil and has a heat input capacity of 8.7 MW (30 MMBtu/h) or greater shall cause to be discharged into the atmosphere from that affected facility any gases that exhibit greater than 20 percent opacity (6-minute average), except for one 6-minute period per hour of not more than 27 percent opacity. Owners and operators of an affected facility that elect to install, calibrate, maintain, and operate a continuous emissions monitoring system (CEMS) for measuring PM emissions according to the requirements of this subpart and are subject to a federally enforceable PM limit of 0.030 lb/MMBtu or less are exempt from the opacity standard specified in this paragraph (c).

(d) The PM and opacity standards under this section apply at all times, except during periods of startup, shutdown, or malfunction.

(e)(1) On and after the date on which the initial performance test is completed or is required to be completed under § 60.8, whichever date comes first, no owner or operator of an affected facility that commences construction, reconstruction, or modification after February 28, 2005, and that combusts coal, oil, wood, a mixture of these fuels, or a mixture of these fuels with any other fuels and has a heat input capacity of 8.7 MW (30 MMBtu/h) or greater shall cause to be discharged into the atmosphere from that affected facility any gases that contain PM in excess of 13 ng/J (0.030 lb/MMBtu) heat input, except as provided in paragraphs (e)(2), (e)(3), and (e)(4) of this section.

(2) As an alternative to meeting the requirements of paragraph (e)(1) of this section, the owner or operator of an affected facility for which modification commenced after February 28, 2005, may elect to meet the requirements of this paragraph. On and after the date on which the initial performance test is completed or required to be completed under § 60.8, whichever date comes first, no owner or operator of an affected facility that commences modification after February 28, 2005 shall cause to be discharged into the atmosphere from that affected facility any gases that contain PM in excess of both:

(i) 22 ng/J (0.051 lb/MMBtu) heat input derived from the combustion of coal, oil, wood, a mixture of these fuels, or a mixture of these fuels with any other fuels; and

(ii) 0.2 percent of the combustion concentration (99.8 percent reduction) when combusting coal, oil, wood, a mixture of these fuels, or a mixture of these fuels with any other fuels.

(3) On and after the date on which the initial performance test is completed or is required to be completed under § 60.8, whichever date comes first, no owner or operator of an affected facility that commences modification after February 28, 2005, and that combusts over 30 percent wood (by heat input) on an annual basis and has a heat input capacity of 8.7 MW (30 MMBtu/h) or greater shall cause to be discharged into the atmosphere from that affected facility any gases that contain PM in excess of 43 ng/J (0.10 lb/MMBtu) heat input.

(4) An owner or operator of an affected facility that commences construction, reconstruction, or modification after February 28, 2005, and that combusts only oil that contains no more than 0.50 weight percent sulfur or a mixture of 0.50 weight percent sulfur oil with other fuels not subject to a PM standard under § 60.43c and not using a post-combustion technology (except a wet scrubber) to reduce PM or SO_2 emissions is not subject to the PM limit in this section.

[72 FR 32759, June 13, 2007, as amended at 74 FR 5091, Jan. 28, 2009; 77 FR 9462, Feb. 16, 2012]

§ 60.44c Compliance and performance test methods and procedures for sulfur dioxide.

(a) Except as provided in paragraphs (g) and (h) of this section and § 60.8(b), performance tests required under § 60.8 shall be conducted following the procedures specified in paragraphs (b), (c), (d), (e), and (f) of this section, as applicable. Section 60.8(f) does not apply to this section. The 30-day notice required in § 60.8(d) applies only to the initial performance test unless otherwise specified by the Administrator.

(b) The initial performance test required under § 60.8 shall be conducted over 30 consecutive operating days of the steam generating unit. Compliance with the percent reduction requirements and SO_2 emission limits under § 60.42c shall be determined using a 30-day average. The first operating day included in the initial performance test shall be scheduled within 30 days after achieving the maximum production rate at which the affect facility will be operated, but not later than 180 days after the initial startup of the facility. The steam generating unit load during the 30-day period does not have to be the maximum design heat input capacity, but must be representative of future operating conditions.

(c) After the initial performance test required under paragraph (b) of this section and § 60.8, compliance with the percent reduction requirements and SO_2 emission limits under § 60.42c is based on the average percent reduction and the average SO_2 emission rates for 30 consecutive steam generating unit operating days. A separate performance test is completed at the end of each steam generating unit operating day, and a new 30-day average percent reduction and SO_2 emission rate are calculated to show compliance with the standard.

(d) If only coal, only oil, or a mixture of coal and oil is combusted in an affected facility, the procedures in Method 19 of appendix A of this part are used to determine the hourly SO_2 emission rate (E_{ho}) and the 30-day average SO_2 emission rate (E_{ao}). The hourly averages used to compute the 30-day averages are obtained from the CEMS. Method 19 of appendix A of this part shall be used to calculate E_{ao} when using daily fuel sampling or Method 6B of appendix A of this part.

(e) If coal, oil, or coal and oil are combusted with other fuels:

(1) An adjusted E_{ho} (E_{ho} o) is used in Equation 19-19 of Method 19 of appendix A of this part to compute the adjusted E_{ao} (E_{ao} o). The E_{ho} o is computed using the following formula:

$$E_{ho}o = \frac{E_{ho} - E_w(1 - X_j)}{X_j}$$

Where:

E_{ho} o = Adjusted E_{ho} , ng/J (lb/MMBtu);

E_{ho} = Hourly SO_2 emission rate, ng/J (lb/MMBtu);

E_w = SO_2 concentration in fuels other than coal and oil combusted in the affected facility, as determined by fuel sampling and analysis procedures in Method 9 of appendix A of this part, ng/J (lb/MMBtu). The value E_w for each fuel lot is used for each hourly average during the time that the lot is being combusted. The owner or operator does not have to measure E_w if the owner or operator elects to assume E_w = 0.

X_k = Fraction of the total heat input from fuel combustion derived from coal and oil, as determined by applicable procedures in Method 19 of appendix A of this part.

(2) The owner or operator of an affected facility that qualifies under the provisions of § 60.42c(c) or (d) (where percent reduction is not required) does not have to measure the parameters E_w or X_k if the owner or operator of the affected facility elects to measure emission rates of the coal or oil using the fuel sampling and analysis procedures under Method 19 of appendix A of this part.

(f) Affected facilities subject to the percent reduction requirements under § 60.42c(a) or (b) shall determine compliance with the SO_2 emission limits under § 60.42c pursuant to paragraphs (d) or (e) of this section, and shall determine compliance with the percent reduction requirements using the following procedures:

(1) If only coal is combusted, the percent of potential SO_2 emission rate is computed using the following formula:

$$\%P_s = 100\left(1 - \frac{\%R_g}{100}\right)\left(1 - \frac{\%R_f}{100}\right)$$

Where:

$\%P_s$ = Potential SO_2 emission rate, in percent;

$\%R_g$ = SO_2 removal efficiency of the control device as determined by Method 19 of appendix A of this part, in percent; and

$\%R_f$ = SO_2 removal efficiency of fuel pretreatment as determined by Method 19 of appendix A of this part, in percent.

(2) If coal, oil, or coal and oil are combusted with other fuels, the same procedures required in paragraph (f)(1) of this section are used, except as provided for in the following:

(i) To compute the $\%P_s$, an adjusted $\%R_g$ ($\%R_g$ o) is computed from E_{ao} o from paragraph (e)(1) of this section and an adjusted average SO_2 inlet rate (E_{ai} o) using the following formula:

$$\%R_g o = 100\left(1 - \frac{E^{\circ}_{ao}}{E^{\circ}_{ai}}\right)$$

Where:

$\%R_g$ o = Adjusted $\%R_g$, in percent;

E_{ao} o = Adjusted E_{ao} , ng/J (lb/MMBtu); and

E_{ai} o = Adjusted average SO_2 inlet rate, ng/J (lb/MMBtu).

(ii) To compute E_{ai} o, an adjusted hourly SO_2 inlet rate (E_{hi} o) is used. The E_{hi} o is computed using the following formula:

$$E_{hi}o = \frac{E_{hi} - E_w(1 - X_k)}{X_k}$$

Where:

E_{hi} o = Adjusted E_{hi} , ng/J (lb/MMBtu);

E_{hi} = Hourly SO_2 inlet rate, ng/J (lb/MMBtu);

E_w = SO_2 concentration in fuels other than coal and oil combusted in the affected facility, as determined by fuel sampling and analysis procedures in Method 19 of appendix A of this part, ng/J (lb/MMBtu). The value E_w for each fuel lot is used for each hourly average during the time that the lot is being combusted. The owner or operator does not have to measure E_w if the owner or operator elects to assume E_w = 0; and

X_k = Fraction of the total heat input from fuel combustion derived from coal and oil, as determined by applicable procedures in Method 19 of appendix A of this part.

(g) For oil-fired affected facilities where the owner or operator seeks to demonstrate compliance with the fuel oil sulfur limits under § 60.42c based on shipment fuel sampling, the initial performance test shall consist of sampling and analyzing the oil in the initial tank of oil to be fired in the steam generating unit to demonstrate that the oil contains 0.5 weight percent sulfur or less. Thereafter, the owner or operator of the affected facility shall sample the oil in the fuel tank after each new shipment of oil is received, as described under § 60.46c(d)(2).

(h) For affected facilities subject to § 60.42c(h)(1), (2), or (3) where the owner or operator seeks to demonstrate compliance with the SO_2 standards based on fuel supplier certification, the performance test shall consist of the certification from the fuel supplier, as described in § 60.48c(f), as applicable.

(i) The owner or operator of an affected facility seeking to demonstrate compliance with the SO_2 standards under § 60.42c(c)(2) shall demonstrate the maximum design heat input capacity of the steam generating unit by operating the steam generating unit at this capacity for 24 hours. This demonstration shall be made during the initial performance test, and a subsequent demonstration may be requested at any other time. If the demonstrated 24-hour average firing rate for the affected facility is less than the maximum design heat input capacity stated by the manufacturer of the affected facility, the demonstrated 24-hour average firing rate shall be used to determine the annual capacity factor for the affected facility; otherwise, the maximum design heat input capacity provided by the manufacturer shall be used.

(j) The owner or operator of an affected facility shall use all valid SO_2 emissions data in calculating $\%P_s$ and E_{ho} under paragraphs (d), (e), or (f) of this section, as applicable, whether or not the minimum emissions data requirements under § 60.46c(f) are achieved. All valid emissions data, including valid data collected during periods of startup, shutdown, and malfunction, shall be used in calculating $\%P_s$ or E_{ho} pursuant to paragraphs (d), (e), or (f) of this section, as applicable.

[72 FR 32759, June 13, 2007, as amended at 74 FR 5091, Jan. 28, 2009]

§ 60.45c Compliance and performance test methods and procedures for particulate matter.

(a) The owner or operator of an affected facility subject to the PM and/or opacity standards under § 60.43c shall conduct an initial performance test as required under § 60.8, and shall conduct subsequent performance tests as requested by the Administrator, to determine compliance with the standards using the following procedures and reference methods, except as specified in paragraph (c) of this section.

(1) Method 1 of appendix A of this part shall be used to select the sampling site and the number of traverse sampling points.

(2) Method 3A or 3B of appendix A-2 of this part shall be used for gas analysis when applying Method 5 or 5B of appendix A-3 of this part or 17 of appendix A-6 of this part.

(3) Method 5, 5B, or 17 of appendix A of this part shall be used to measure the concentration of PM as follows:

(i) Method 5 of appendix A of this part may be used only at affected facilities without wet scrubber systems.

(ii) Method 17 of appendix A of this part may be used at affected facilities with or without wet scrubber systems provided the stack gas temperature does not exceed a temperature of 160 °C (320 °F). The procedures of Sections 8.1 and 11.1 of Method 5B of appendix A of this part may be used in Method 17 of appendix A of this part only if Method 17 of appendix A of this part is used in conjunction with a wet scrubber system. Method 17 of appendix A of this part shall not be used in conjunction with a wet scrubber system if the effluent is saturated or laden with water droplets.

(iii) Method 5B of appendix A of this part may be used in conjunction with a wet scrubber system.

(4) The sampling time for each run shall be at least 120 minutes and the minimum sampling volume shall be 1.7 dry standard cubic meters (dscm) [60 dry standard cubic feet (dscf)] except that smaller sampling times or volumes may be approved by the Administrator when necessitated by process variables or other factors.

(5) For Method 5 or 5B of appendix A of this part, the temperature of the sample gas in the probe and filter holder shall be monitored and maintained at 160 ±14 °C (320±25 °F).

(6) For determination of PM emissions, an oxygen (O_2) or carbon dioxide (CO_2) measurement shall be obtained simultaneously with each run of Method 5, 5B, or 17 of appendix A of this part by traversing the duct at the same sampling location.

(7) For each run using Method 5, 5B, or 17 of appendix A of this part, the emission rates expressed in ng/J (lb/MMBtu) heat input shall be determined using:

(i) The O_2 or CO_2 measurements and PM measurements obtained under this section, (ii) The dry basis F factor, and

(iii) The dry basis emission rate calculation procedure contained in Method 19 of appendix A of this part.

(8) Method 9 of appendix A-4 of this part shall be used for determining the opacity of stack emissions.

(b) The owner or operator of an affected facility seeking to demonstrate compliance with the PM standards under § 60.43c(b)(2) shall demonstrate the maximum design heat input capacity of the steam generating unit by operating the steam generating unit at this capacity for 24 hours. This demonstration shall be made during the initial performance test, and a subsequent demonstration may be requested at any other time. If the demonstrated 24-hour average firing rate for the affected facility is less than the maximum design heat input capacity stated by the manufacturer of the affected facility, the demonstrated 24-hour average firing rate shall be used to determine the annual capacity factor for the affected facility; otherwise, the maximum design heat input capacity provided by the manufacturer shall be used.

(c) In place of PM testing with Method 5 or 5B of appendix A-3 of this part or Method 17 of appendix A-6 of this part, an owner or operator may elect to install, calibrate, maintain, and operate a CEMS for monitoring PM emissions discharged to the atmosphere and record the output of the system. The owner or operator of an affected facility who elects to continuously monitor PM emissions instead of conducting performance testing using Method 5 or 5B of appendix A-3 of this part or Method 17 of appendix A-6 of this part shall install, calibrate, maintain, and operate a CEMS and shall comply with the requirements specified in paragraphs (c)(1) through (c)(14) of this section.

(1) Notify the Administrator 1 month before starting use of the system.

(2) Notify the Administrator 1 month before stopping use of the system.

(3) The monitor shall be installed, evaluated, and operated in accordance with § 60.13 of subpart A of this part.

(4) The initial performance evaluation shall be completed no later than 180 days after the date of initial startup of the affected facility, as specified under § 60.8 of subpart A of this part or within 180 days of notification to the Administrator of use of CEMS if the owner or operator was previously determining compliance by Method 5, 5B, or 17 of appendix A of this part performance tests, whichever is later.

(5) The owner or operator of an affected facility shall conduct an initial performance test for PM emissions as required under § 60.8 of subpart A of this part. Compliance with the PM emission limit shall be determined by using the CEMS specified in paragraph (d) of this section to measure PM and calculating a 24-hour block arithmetic average emission concentration using EPA Reference Method 19 of appendix A of this part, section 4.1.

(6) Compliance with the PM emission limit shall be determined based on the 24-hour daily (block) average of the hourly arithmetic average emission concentrations using CEMS outlet data.

(7) At a minimum, valid CEMS hourly averages shall be obtained as specified in paragraph (c)(7)(i) of this section for 75 percent of the total operating hours per 30-day rolling average.

(i) At least two data points per hour shall be used to calculate each 1-hour arithmetic average.

(ii) [Reserved]

(8) The 1-hour arithmetic averages required under paragraph (c)(7) of this section shall be expressed in ng/J or lb/MMBtu heat input and shall be used to calculate the boiler operating day daily arithmetic average emission concentrations. The 1-hour arithmetic averages shall be calculated using the data points required under § 60.13(e)(2) of subpart A of this part.

(9) All valid CEMS data shall be used in calculating average emission concentrations even if the minimum CEMS data requirements of paragraph (c)(7) of this section are not met.

(10) The CEMS shall be operated according to Performance Specification 11 in appendix B of this part.

(11) During the correlation testing runs of the CEMS required by Performance Specification 11 in appendix B of this part, PM and O_2 (or CO_2) data shall be collected concurrently (or within a 30- to 60-minute period) by both the continuous emission monitors and performance tests conducted using the following test methods.

(i) For PM, Method 5 or 5B of appendix A-3 of this part or Method 17 of appendix A-6 of this part shall be used; and

(ii) For O2 (or CO_2), Method 3A or 3B of appendix A-2 of this part, as applicable shall be used.

(12) Quarterly accuracy determinations and daily calibration drift tests shall be performed in accordance with procedure 2 in appendix F of this part. Relative Response Audit's must be performed annually and Response Correlation Audits must be performed every 3 years.

(13) When PM emissions data are not obtained because of CEMS breakdowns, repairs, calibration checks, and zero and span adjustments, emissions data shall be obtained by using other monitoring systems as approved by the Administrator or EPA Reference Method 19 of appendix A of this part to provide, as necessary, valid emissions data for a minimum of 75 percent of total operating hours on a 30-day rolling average.

(14) As of January 1, 2012, and within 90 days after the date of completing each performance test, as defined in § 60.8, conducted to demonstrate compliance with this subpart, you must submit relative accuracy test audit (*i.e.,* reference method) data and performance test (*i.e.,* compliance test) data, except opacity data, electronically to EPA's Central Data Exchange (CDX) by using the Electronic Reporting Tool (ERT) (see *http://www.epa.gov/ttn/chief/ert/ert tool.html/*) or other compatible electronic spreadsheet. Only data collected using test methods compatible with ERT are subject to this requirement to be submitted electronically into EPA's WebFIRE database.

(d) The owner or operator of an affected facility seeking to demonstrate compliance under § 60.43c(e)(4) shall follow the applicable procedures under § 60.48c(f). For residual oil-fired affected facilities, fuel supplier certifications are only allowed for facilities with heat input capacities between 2.9 and 8.7 MW (10 to 30 MMBtu/h).

[72 FR 32759, June 13, 2007, as amended at 74 FR 5091, Jan. 28, 2009; 76 FR 3523, Jan. 20, 2011; 77 FR 9463, Feb. 16, 2012]

§ 60.46c Emission monitoring for sulfur dioxide.

(a) Except as provided in paragraphs (d) and (e) of this section, the owner or operator of an affected facility subject to the SO_2 emission limits under § 60.42c shall install, calibrate, maintain, and operate a CEMS for measuring SO_2 concentrations and either O_2 or CO_2 concentrations at the outlet of the SO_2 control device (or the outlet of the steam generating unit if no SO_2 control device is used), and shall record the output of the system. The owner or operator of an affected facility subject to the percent reduction requirements under § 60.42c shall measure SO_2 concentrations and either O_2 or CO_2 concentrations at both the inlet and outlet of the SO_2 control device.

(b) The 1-hour average SO_2 emission rates measured by a CEMS shall be expressed in ng/J or lb/MMBtu heat input and shall be used to calculate the average emission rates under § 60.42c. Each 1-hour average SO_2 emission rate must be based on at least 30 minutes of operation, and shall be calculated using the data points required under § 60.13(h)(2). Hourly SO_2 emission rates are not calculated if the affected facility is operated less than 30 minutes in a 1-hour period and are not counted toward determination of a steam generating unit operating day.

(c) The procedures under § 60.13 shall be followed for installation, evaluation, and operation of the CEMS.

(1) All CEMS shall be operated in accordance with the applicable procedures under Performance Specifications 1, 2, and 3 of appendix B of this part.

(2) Quarterly accuracy determinations and daily calibration drift tests shall be performed in accordance with Procedure 1 of appendix F of this part.

(3) For affected facilities subject to the percent reduction requirements under § 60.42c, the span value of the SO_2 CEMS at the inlet to the SO_2 control device shall be 125 percent of the maximum estimated hourly potential SO_2 emission rate of the fuel combusted, and the span value of the SO_2 CEMS at the outlet from the SO_2 control device shall be 50 percent of the maximum estimated hourly potential SO_2 emission rate of the fuel combusted.

(4) For affected facilities that are not subject to the percent reduction requirements of § 60.42c, the span value of the SO_2 CEMS at the outlet from the SO_2 control device (or outlet of the steam generating unit if no SO_2 control device is used) shall be 125 percent of the maximum estimated hourly potential SO_2 emission rate of the fuel combusted.

(d) As an alternative to operating a CEMS at the inlet to the SO_2 control device (or outlet of the steam generating unit if no SO_2 control device is used) as required under paragraph (a) of this section, an owner or operator may elect to determine the average SO_2 emission rate by sampling the fuel prior to combustion. As an alternative to operating a CEMS at the outlet from the SO_2 control device (or outlet of the steam generating unit if no SO_2 control device is used) as required under paragraph (a) of this section, an owner or operator may elect to determine the average SO_2 emission rate by using Method 6B of appendix A of this part. Fuel sampling shall be conducted pursuant to either paragraph (d)(1) or (d)(2) of this section. Method 6B of appendix A of this part shall be conducted pursuant to paragraph (d)(3) of this section.

(1) For affected facilities combusting coal or oil, coal or oil samples shall be collected daily in an as-fired condition at the inlet to the steam generating unit and analyzed for sulfur content and heat content according the Method 19 of appendix A of this part. Method 19 of appendix A of this part provides procedures for converting these measurements into the format to be used in calculating the average SO_2 input rate.

(2) As an alternative fuel sampling procedure for affected facilities combusting oil, oil samples may be collected from the fuel tank for each steam generating unit immediately after the fuel tank is filled and before any oil is combusted. The owner or operator of the affected facility shall analyze the oil sample to determine the sulfur content of the oil. If a partially empty fuel tank is refilled, a new sample and analysis of the fuel in the tank would be required upon filling. Results of the fuel analysis taken after each new shipment of oil is received shall be used as the daily value when

calculating the 30-day rolling average until the next shipment is received. If the fuel analysis shows that the sulfur content in the fuel tank is greater than 0.5 weight percent sulfur, the owner or operator shall ensure that the sulfur content of subsequent oil shipments is low enough to cause the 30-day rolling average sulfur content to be 0.5 weight percent sulfur or less.

(3) Method 6B of appendix A of this part may be used in lieu of CEMS to measure SO_2 at the inlet or outlet of the SO_2 control system. An initial stratification test is required to verify the adequacy of the Method 6B of appendix A of this part sampling location. The stratification test shall consist of three paired runs of a suitable SO_2 and CO_2 measurement train operated at the candidate location and a second similar train operated according to the procedures in § 3.2 and the applicable procedures in section 7 of Performance Specification 2 of appendix B of this part. Method 6B of appendix A of this part, Method 6A of appendix A of this part, or a combination of Methods 6 and 3 of appendix A of this part or Methods 6C and 3A of appendix A of this part are suitable measurement techniques. If Method 6B of appendix A of this part is used for the second train, sampling time and timer operation may be adjusted for the stratification test as long as an adequate sample volume is collected; however, both sampling trains are to be operated similarly. For the location to be adequate for Method 6B of appendix A of this part 24-hour tests, the mean of the absolute difference between the three paired runs must be less than 10 percent (0.10).

(e) The monitoring requirements of paragraphs (a) and (d) of this section shall not apply to affected facilities subject to § 60.42c(h) (1), (2), or (3) where the owner or operator of the affected facility seeks to demonstrate compliance with the SO_2 standards based on fuel supplier certification, as described under § 60.48c(f), as applicable.

(f) The owner or operator of an affected facility operating a CEMS pursuant to paragraph (a) of this section, or conducting as-fired fuel sampling pursuant to paragraph (d)(1) of this section, shall obtain emission data for at least 75 percent of the operating hours in at least 22 out of 30 successive steam generating unit operating days. If this minimum data requirement is not met with a single monitoring system, the owner or operator of the affected facility shall supplement the emission data with data collected with other monitoring systems as approved by the Administrator.

§ 60.47c Emission monitoring for particulate matter.

(a) Except as provided in paragraphs (c), (d), (e), and (f) of this section, the owner or operator of an affected facility combusting coal, oil, or wood that is subject to the opacity standards under § 60.43c shall install, calibrate, maintain, and operate a continuous opacity monitoring system (COMS) for measuring the opacity of the emissions discharged to the atmosphere and record the output of the system. The owner or operator of an affected facility subject to an opacity standard in § 60.43c(c) that is not required to use a COMS due to paragraphs (c), (d), (e), or (f) of this section that elects not to use a COMS shall conduct a performance test using Method 9 of appendix A-4 of this part and the procedures in § 60.11 to demonstrate compliance with the applicable limit in § 60.43c by April 29, 2011, within 45 days of stopping use of an existing COMS, or within 180 days after initial startup of the facility, whichever is later, and shall comply with either paragraphs (a)(1), (a)(2), or (a)(3) of this section. The observation period for Method 9 of appendix A-4 of this part performance tests may be reduced from 3 hours to 60 minutes if all 6-minute averages are less than 10 percent and all individual 15-second observations are less than or equal to 20 percent during the initial 60 minutes of observation.

(1) Except as provided in paragraph (a)(2) and (a)(3) of this section, the owner or operator shall conduct subsequent Method 9 of appendix A-4 of this part performance tests using the procedures in paragraph (a) of this section according to the applicable schedule in paragraphs (a)(1)(i) through (a)(1)(iv) of this section, as determined by the most recent Method 9 of appendix A-4 of this part performance test results.

(i) If no visible emissions are observed, a subsequent Method 9 of appendix A-4 of this part performance test must be completed within 12 calendar months from the date that the most recent performance test was conducted or within 45 days of the next day that fuel with an opacity standard is combusted, whichever is later;

(ii) If visible emissions are observed but the maximum 6-minute average opacity is less than or equal to 5 percent, a subsequent Method 9 of appendix A-4 of this part performance test must be completed within 6 calendar months from the date that the most recent performance test was conducted or within 45 days of the next day that fuel with an opacity standard is combusted, whichever is later;

(iii) If the maximum 6-minute average opacity is greater than 5 percent but less than or equal to 10 percent, a subsequent Method 9 of appendix A-4 of this part performance test must be completed within 3 calendar months from

the date that the most recent performance test was conducted or within 45 days of the next day that fuel with an opacity standard is combusted, whichever is later; or

(iv) If the maximum 6-minute average opacity is greater than 10 percent, a subsequent Method 9 of appendix A-4 of this part performance test must be completed within 45 calendar days from the date that the most recent performance test was conducted.

(2) If the maximum 6-minute opacity is less than 10 percent during the most recent Method 9 of appendix A-4 of this part performance test, the owner or operator may, as an alternative to performing subsequent Method 9 of appendix A-4 of this part performance tests, elect to perform subsequent monitoring using Method 22 of appendix A-7 of this part according to the procedures specified in paragraphs (a)(2)(i) and (ii) of this section.

(i) The owner or operator shall conduct 10 minute observations (during normal operation) each operating day the affected facility fires fuel for which an opacity standard is applicable using Method 22 of appendix A-7 of this part and demonstrate that the sum of the occurrences of any visible emissions is not in excess of 5 percent of the observation period (*i.e.* , 30 seconds per 10 minute period). If the sum of the occurrence of any visible emissions is greater than 30 seconds during the initial 10 minute observation, immediately conduct a 30 minute observation. If the sum of the occurrence of visible emissions is greater than 5 percent of the observation period (*i.e.,* 90 seconds per 30 minute period), the owner or operator shall either document and adjust the operation of the facility and demonstrate within 24 hours that the sum of the occurrence of visible emissions is equal to or less than 5 percent during a 30 minute observation (*i.e.,* 90 seconds) or conduct a new Method 9 of appendix A-4 of this part performance test using the procedures in paragraph (a) of this section within 45 calendar days according to the requirements in § 60.45c(a)(8).

(ii) If no visible emissions are observed for 10 operating days during which an opacity standard is applicable, observations can be reduced to once every 7 operating days during which an opacity standard is applicable. If any visible emissions are observed, daily observations shall be resumed.

(3) If the maximum 6-minute opacity is less than 10 percent during the most recent Method 9 of appendix A-4 of this part performance test, the owner or operator may, as an alternative to performing subsequent Method 9 of appendix A-4 performance tests, elect to perform subsequent monitoring using a digital opacity compliance system according to a site-specific monitoring plan approved by the Administrator. The observations shall be similar, but not necessarily identical, to the requirements in paragraph (a)(2) of this section. For reference purposes in preparing the monitoring plan, see OAQPS “Determination of Visible Emission Opacity from Stationary Sources Using Computer-Based Photographic Analysis Systems.” This document is available from the U.S. Environmental Protection Agency (U.S. EPA); Office of Air Quality and Planning Standards; Sector Policies and Programs Division; Measurement Policy Group (D243-02), Research Triangle Park, NC 27711. This document is also available on the Technology Transfer Network (TTN) under Emission Measurement Center Preliminary Methods.

(b) All COMS shall be operated in accordance with the applicable procedures under Performance Specification 1 of appendix B of this part. The span value of the opacity COMS shall be between 60 and 80 percent.

(c) Owners and operators of an affected facilities that burn only distillate oil that contains no more than 0.5 weight percent sulfur and/or liquid or gaseous fuels with potential sulfur dioxide emission rates of 26 ng/J (0.060 lb/MMBtu) heat input or less and that do not use a post-combustion technology to reduce SO2 or PM emissions and that are subject to an opacity standard in § 60.43c(c) are not required to operate a COMS if they follow the applicable procedures in § 60.48c(f).

(d) Owners or operators complying with the PM emission limit by using a PM CEMS must calibrate, maintain, operate, and record the output of the system for PM emissions discharged to the atmosphere as specified in § 60.45c(c). The CEMS specified in paragraph § 60.45c(c) shall be operated and data recorded during all periods of operation of the affected facility except for CEMS breakdowns and repairs. Data is recorded during calibration checks, and zero and span adjustments.

(e) Owners and operators of an affected facility that is subject to an opacity standard in § 60.43c(c) and that does not use post-combustion technology (except a wet scrubber) for reducing PM, SO_2 , or carbon monoxide (CO) emissions, burns only gaseous fuels or fuel oils that contain less than or equal to 0.5 weight percent sulfur, and is operated such that emissions of CO discharged to the atmosphere from the affected facility are maintained at levels less than or equal to 0.15 lb/MMBtu on a boiler operating day average basis is not required to operate a COMS. Owners and

operators of affected facilities electing to comply with this paragraph must demonstrate compliance according to the procedures specified in paragraphs (e)(1) through (4) of this section; or

(1) You must monitor CO emissions using a CEMS according to the procedures specified in paragraphs (e)(1)(i) through (iv) of this section.

(i) The CO CEMS must be installed, certified, maintained, and operated according to the provisions in § 60.58b(i)(3) of subpart Eb of this part.

(ii) Each 1-hour CO emissions average is calculated using the data points generated by the CO CEMS expressed in parts per million by volume corrected to 3 percent oxygen (dry basis).

(iii) At a minimum, valid 1-hour CO emissions averages must be obtained for at least 90 percent of the operating hours on a 30-day rolling average basis. The 1-hour averages are calculated using the data points required in § 60.13(h)(2).

(iv) Quarterly accuracy determinations and daily calibration drift tests for the CO CEMS must be performed in accordance with procedure 1 in appendix F of this part.

(2) You must calculate the 1-hour average CO emissions levels for each steam generating unit operating day by multiplying the average hourly CO output concentration measured by the CO CEMS times the corresponding average hourly flue gas flow rate and divided by the corresponding average hourly heat input to the affected source. The 24-hour average CO emission level is determined by calculating the arithmetic average of the hourly CO emission levels computed for each steam generating unit operating day.

(3) You must evaluate the preceding 24-hour average CO emission level each steam generating unit operating day excluding periods of affected source startup, shutdown, or malfunction. If the 24-hour average CO emission level is greater than 0.15 lb/MMBtu, you must initiate investigation of the relevant equipment and control systems within 24 hours of the first discovery of the high emission incident and, take the appropriate corrective action as soon as practicable to adjust control settings or repair equipment to reduce the 24-hour average CO emission level to 0.15 lb/MMBtu or less.

(4) You must record the CO measurements and calculations performed according to paragraph (e) of this section and any corrective actions taken. The record of corrective action taken must include the date and time during which the 24-hour average CO emission level was greater than 0.15 lb/MMBtu, and the date, time, and description of the corrective action.

(f) An owner or operator of an affected facility that is subject to an opacity standard in § 60.43c(c) is not required to operate a COMS provided that the affected facility meets the conditions in either paragraphs (f)(1), (2), or (3) of this section.

(1) The affected facility uses a fabric filter (baghouse) as the primary PM control device and, the owner or operator operates a bag leak detection system to monitor the performance of the fabric filter according to the requirements in section § 60.48Da of this part.

(2) The affected facility uses an ESP as the primary PM control device, and the owner or operator uses an ESP predictive model to monitor the performance of the ESP developed in accordance and operated according to the requirements in section § 60.48Da of this part.

(3) The affected facility burns only gaseous fuels and/or fuel oils that contain no greater than 0.5 weight percent sulfur, and the owner or operator operates the unit according to a written site-specific monitoring plan approved by the permitting authority. This monitoring plan must include procedures and criteria for establishing and monitoring specific parameters for the affected facility indicative of compliance with the opacity standard. For testing performed as part of this site-specific monitoring plan, the permitting authority may require as an alternative to the notification and reporting requirements specified in §§ 60.8 and 60.11 that the owner or operator submit any deviations with the excess emissions report required under § 60.48c(c).

[72 FR 32759, June 13, 2007, as amended at 74 FR 5091, Jan. 28, 2009; 76 FR 3523, Jan. 20, 2011; 77 FR 9463, Feb. 16, 2012]

§ 60.48c Reporting and recordkeeping requirements.

(a) The owner or operator of each affected facility shall submit notification of the date of construction or reconstruction and actual startup, as provided by § 60.7 of this part. This notification shall include:

(1) The design heat input capacity of the affected facility and identification of fuels to be combusted in the affected facility.

(2) If applicable, a copy of any federally enforceable requirement that limits the annual capacity factor for any fuel or mixture of fuels under § 60.42c, or § 60.43c.

(3) The annual capacity factor at which the owner or operator anticipates operating the affected facility based on all fuels fired and based on each individual fuel fired.

(4) Notification if an emerging technology will be used for controlling SO_2 emissions. The Administrator will examine the description of the control device and will determine whether the technology qualifies as an emerging technology. In making this determination, the Administrator may require the owner or operator of the affected facility to submit additional information concerning the control device. The affected facility is subject to the provisions of § 60.42c(a) or (b)(1), unless and until this determination is made by the Administrator.

(b) The owner or operator of each affected facility subject to the SO_2 emission limits of § 60.42c, or the PM or opacity limits of § 60.43c, shall submit to the Administrator the performance test data from the initial and any subsequent performance tests and, if applicable, the performance evaluation of the CEMS and/or COMS using the applicable performance specifications in appendix B of this part.

(c) In addition to the applicable requirements in § 60.7, the owner or operator of an affected facility subject to the opacity limits in § 60.43c(c) shall submit excess emission reports for any excess emissions from the affected facility that occur during the reporting period and maintain records according to the requirements specified in paragraphs (c)(1) through (3) of this section, as applicable to the visible emissions monitoring method used.

(1) For each performance test conducted using Method 9 of appendix A-4 of this part, the owner or operator shall keep the records including the information specified in paragraphs (c)(1)(i) through (iii) of this section.

(i) Dates and time intervals of all opacity observation periods;

(ii) Name, affiliation, and copy of current visible emission reading certification for each visible emission observer participating in the performance test; and

(iii) Copies of all visible emission observer opacity field data sheets;

(2) For each performance test conducted using Method 22 of appendix A-4 of this part, the owner or operator shall keep the records including the information specified in paragraphs (c)(2)(i) through (iv) of this section.

(i) Dates and time intervals of all visible emissions observation periods;

(ii) Name and affiliation for each visible emission observer participating in the performance test;

(iii) Copies of all visible emission observer opacity field data sheets; and

(iv) Documentation of any adjustments made and the time the adjustments were completed to the affected facility operation by the owner or operator to demonstrate compliance with the applicable monitoring requirements.

(3) For each digital opacity compliance system, the owner or operator shall maintain records and submit reports according to the requirements specified in the site-specific monitoring plan approved by the Administrator

(d) The owner or operator of each affected facility subject to the SO_2 emission limits, fuel oil sulfur limits, or percent reduction requirements under § 60.42c shall submit reports to the Administrator.

(e) The owner or operator of each affected facility subject to the SO_2 emission limits, fuel oil sulfur limits, or percent reduction requirements under § 60.42c shall keep records and submit reports as required under paragraph (d) of this section, including the following information, as applicable.

(1) Calendar dates covered in the reporting period.

(2) Each 30-day average SO_2 emission rate (ng/J or lb/MMBtu), or 30-day average sulfur content (weight percent), calculated during the reporting period, ending with the last 30-day period; reasons for any noncompliance with the emission standards; and a description of corrective actions taken.

(3) Each 30-day average percent of potential SO_2 emission rate calculated during the reporting period, ending with the last 30-day period; reasons for any noncompliance with the emission standards; and a description of the corrective actions taken.

(4) Identification of any steam generating unit operating days for which SO_2 or diluent (O_2 or CO_2) data have not been obtained by an approved method for at least 75 percent of the operating hours; justification for not obtaining sufficient data; and a description of corrective actions taken.

(5) Identification of any times when emissions data have been excluded from the calculation of average emission rates; justification for excluding data; and a description of corrective actions taken if data have been excluded for periods other than those during which coal or oil were not combusted in the steam generating unit.

(6) Identification of the F factor used in calculations, method of determination, and type of fuel combusted.

(7) Identification of whether averages have been obtained based on CEMS rather than manual sampling methods.

(8) If a CEMS is used, identification of any times when the pollutant concentration exceeded the full span of the CEMS.

(9) If a CEMS is used, description of any modifications to the CEMS that could affect the ability of the CEMS to comply with Performance Specifications 2 or 3 of appendix B of this part.

(10) If a CEMS is used, results of daily CEMS drift tests and quarterly accuracy assessments as required under appendix F, Procedure 1 of this part.

(11) If fuel supplier certification is used to demonstrate compliance, records of fuel supplier certification as described under paragraph (f)(1), (2), (3), or (4) of this section, as applicable. In addition to records of fuel supplier certifications, the report shall include a certified statement signed by the owner or operator of the affected facility that the records of fuel supplier certifications submitted represent all of the fuel combusted during the reporting period.

(f) Fuel supplier certification shall include the following information:

(1) For distillate oil:

(i) The name of the oil supplier;

(ii) A statement from the oil supplier that the oil complies with the specifications under the definition of distillate oil in § 60.41c; and

(iii) The sulfur content or maximum sulfur content of the oil.

(2) For residual oil:

(i) The name of the oil supplier;

(ii) The location of the oil when the sample was drawn for analysis to determine the sulfur content of the oil, specifically including whether the oil was sampled as delivered to the affected facility, or whether the sample was drawn from oil in storage at the oil supplier's or oil refiner's facility, or other location;

(iii) The sulfur content of the oil from which the shipment came (or of the shipment itself); and

(iv) The method used to determine the sulfur content of the oil.

(3) For coal:

(i) The name of the coal supplier;

(ii) The location of the coal when the sample was collected for analysis to determine the properties of the coal, specifically including whether the coal was sampled as delivered to the affected facility or whether the sample was collected from coal in storage at the mine, at a coal preparation plant, at a coal supplier's facility, or at another location. The certification shall include the name of the coal mine (and coal seam), coal storage facility, or coal preparation plant (where the sample was collected);

(iii) The results of the analysis of the coal from which the shipment came (or of the shipment itself) including the sulfur content, moisture content, ash content, and heat content; and

(iv) The methods used to determine the properties of the coal.

(4) For other fuels:

(i) The name of the supplier of the fuel;

(ii) The potential sulfur emissions rate or maximum potential sulfur emissions rate of the fuel in ng/J heat input; and

(iii) The method used to determine the potential sulfur emissions rate of the fuel.

(g)(1) Except as provided under paragraphs (g)(2) and (g)(3) of this section, the owner or operator of each affected facility shall record and maintain records of the amount of each fuel combusted during each operating day.

(2) As an alternative to meeting the requirements of paragraph (g)(1) of this section, the owner or operator of an affected facility that combusts only natural gas, wood, fuels using fuel certification in § 60.48c(f) to demonstrate compliance with the SO_2 standard, fuels not subject to an emissions standard (excluding opacity), or a mixture of these fuels may elect to record and maintain records of the amount of each fuel combusted during each calendar month.

(3) As an alternative to meeting the requirements of paragraph (g)(1) of this section, the owner or operator of an affected facility or multiple affected facilities located on a contiguous property unit where the only fuels combusted in any steam generating unit (including steam generating units not subject to this subpart) at that property are natural gas, wood, distillate oil meeting the most current requirements in § 60.42C to use fuel certification to demonstrate compliance with the SO_2 standard, and/or fuels, excluding coal and residual oil, not subject to an emissions standard (excluding opacity) may elect to record and maintain records of the total amount of each steam generating unit fuel delivered to that property during each calendar month.

(h) The owner or operator of each affected facility subject to a federally enforceable requirement limiting the annual capacity factor for any fuel or mixture of fuels under § 60.42c or § 60.43c shall calculate the annual capacity factor individually for each fuel combusted. The annual capacity factor is determined on a 12-month rolling average basis with a new annual capacity factor calculated at the end of the calendar month.

(i) All records required under this section shall be maintained by the owner or operator of the affected facility for a period of two years following the date of such record.

(j) The reporting period for the reports required under this subpart is each six-month period. All reports shall be submitted to the Administrator and shall be postmarked by the 30th day following the end of the reporting period.

[72 FR 32759, June 13, 2007, as amended at 74 FR 5091, Jan. 28, 2009]

Attachment C
To Part 70 Operating Permit Renewal No. T089-29907-00121

[Downloaded from the eCFR on May 13, 2013]

Electronic Code of Federal Regulations

Title 40: Protection of Environment

Part 60, Subpart Y—Standards of Performance for Coal Preparation and Processing Plants

Source: 74 FR 51977, Oct. 8, 2009, unless otherwise noted.

§ 60.250 Applicability and designation of affected facility.

(a) The provisions of this subpart apply to affected facilities in coal preparation and processing plants that process more than 181 megagrams (Mg) (200 tons) of coal per day.

(b) The provisions in § 60.251, § 60.252(a), § 60.253(a), § 60.254(a), § 60.255(a), and § 60.256(a) of this subpart are applicable to any of the following affected facilities that commenced construction, reconstruction or modification after October 27, 1974, and on or before April 28, 2008: Thermal dryers, pneumatic coal-cleaning equipment (air tables), coal processing and conveying equipment (including breakers and crushers), and coal storage systems, transfer and loading systems.

(c) The provisions in § 60.251, § 60.252(b)(1) and (c), § 60.253(b), § 60.254(b), § 60.255(b) through (h), § 60.256(b) and (c), § 60.257, and § 60.258 of this subpart are applicable to any of the following affected facilities that commenced construction, reconstruction or modification after April 28, 2008, and on or before May 27, 2009: Thermal dryers, pneumatic coal-cleaning equipment (air tables), coal processing and conveying equipment (including breakers and crushers), and coal storage systems, transfer and loading systems.

(d) The provisions in § 60.251, § 60.252(b)(1) through (3), and (c), § 60.253(b), § 60.254(b) and (c), § 60.255(b) through (h), § 60.256(b) and (c), § 60.257, and § 60.258 of this subpart are applicable to any of the following affected facilities that commenced construction, reconstruction or modification after May 27, 2009: Thermal dryers, pneumatic coal-cleaning equipment (air tables), coal processing and conveying equipment (including breakers and crushers), coal storage systems, transfer and loading systems, and open storage piles.

§ 60.251 Definitions.

As used in this subpart, all terms not defined herein have the meaning given them in the Clean Air Act (Act) and in subpart A of this part.

(a) *Anthracite* means coal that is classified as anthracite according to the American Society of Testing and Materials in ASTM D388 (incorporated by reference, *see* § 60.17).

(b) *Bag leak detection system* means a system that is capable of continuously monitoring relative particulate matter (dust loadings) in the exhaust of a fabric filter to detect bag leaks and other upset conditions. A bag leak detection system includes, but is not limited to, an instrument that operates on triboelectric, light scattering, light transmittance, or other effect to continuously monitor relative particulate matter loadings.

(c) *Bituminous coal* means solid fossil fuel classified as bituminous coal by ASTM D388 (incorporated by reference— *see* § 60.17).

(d) *Coal* means:

(1) For units constructed, reconstructed, or modified on or before May 27, 2009, all solid fossil fuels classified as anthracite, bituminous, subbituminous, or lignite by ASTM D388 (incorporated by reference— *see* § 60.17).

(2) For units constructed, reconstructed, or modified after May 27, 2009, all solid fossil fuels classified as anthracite, bituminous, subbituminous, or lignite by ASTM D388 (incorporated by reference— *see* § 60.17), and coal refuse.

(e) *Coal preparation and processing plant* means any facility (excluding underground mining operations) which prepares coal by one or more of the following processes: breaking, crushing, screening, wet or dry cleaning, and thermal drying.

(f) *Coal processing and conveying equipment* means any machinery used to reduce the size of coal or to separate coal from refuse, and the equipment used to convey coal to or remove coal and refuse from the machinery. This includes, but is not limited to, breakers, crushers, screens, and conveyor belts. Equipment located at the mine face is not considered to be part of the coal preparation and processing plant.

(g) *Coal refuse* means waste products of coal mining, physical coal cleaning, and coal preparation operations (*e.g.* culm, gob, *etc.*) containing coal, matrix material, clay, and other organic and inorganic material.

(h) *Coal storage system* means any facility used to store coal except for open storage piles.

(i) *Design controlled potential PM emissions rate* means the theoretical particulate matter (PM) emissions (Mg) that would result from the operation of a control device at its design emissions rate (grams per dry standard cubic meter (g/dscm)), multiplied by the maximum design flow rate (dry standard cubic meter per minute (dscm/min)), multiplied by 60 (minutes per hour (min/hr)), multiplied by 8,760 (hours per year (hr/yr)), divided by 1,000,000 (megagrams per gram (Mg/g)).

(j) *Indirect thermal dryer* means a thermal dryer that reduces the moisture content of coal through indirect heating of the coal through contact with a heat transfer medium. If the source of heat (the source of combustion or furnace) is subject to another subpart of this part, then the furnace and the associated emissions are not part of the affected facility. However, if the source of heat is not subject to another subpart of this part, then the furnace and the associated emissions are part of the affected facility.

(k) *Lignite* means coal that is classified as lignite A or B according to the American Society of Testing and Materials in ASTM D388 (incorporated by reference, *see* § 60.17).

(l) *Mechanical vent* means any vent that uses a powered mechanical drive (machine) to induce air flow.

(m) *Open storage pile* means any facility, including storage area, that is not enclosed that is used to store coal, including the equipment used in the loading, unloading, and conveying operations of the facility.

(n) *Operating day* means a 24-hour period between 12 midnight and the following midnight during which coal is prepared or processed at any time by the affected facility. It is not necessary that coal be prepared or processed the entire 24-hour period.

(o) *Pneumatic coal-cleaning equipment* means:

(1) For units constructed, reconstructed, or modified on or before May 27, 2009, any facility which classifies bituminous coal by size or separates bituminous coal from refuse by application of air stream(s).

(2) For units constructed, reconstructed, or modified after May 27, 2009, any facility which classifies coal by size or separates coal from refuse by application of air stream(s).

(p) *Potential combustion concentration* means the theoretical emissions (nanograms per joule (ng/J) or pounds per million British thermal units (lb/MMBtu) heat input) that would result from combustion of a fuel in an uncleaned state without emission control systems, as determined using Method 19 of appendix A-7 of this part.

(q) *Subbituminous coal* means coal that is classified as subbituminous A, B, or C according to the American Society of Testing and Materials in ASTM D388 (incorporated by reference, *see* § 60.17).

(r) *Thermal dryer* means:

(1) For units constructed, reconstructed, or modified on or before May 27, 2009, any facility in which the moisture content of bituminous coal is reduced by contact with a heated gas stream which is exhausted to the atmosphere.

(2) For units constructed, reconstructed, or modified after May 27, 2009, any facility in which the moisture content of coal is reduced by either contact with a heated gas stream which is exhausted to the atmosphere or through indirect heating of the coal through contact with a heated heat transfer medium.

(s) *Transfer and loading system* means any facility used to transfer and load coal for shipment.

§ 60.252 Standards for thermal dryers.

(a) On and after the date on which the performance test is conducted or required to be completed under § 60.8, whichever date comes first, an owner or operator of a thermal dryer constructed, reconstructed, or modified on or before April 28, 2008, subject to the provisions of this subpart must meet the requirements in paragraphs (a)(1) and (a)(2) of this section.

(1) The owner or operator shall not cause to be discharged into the atmosphere from the thermal dryer any gases which contain PM in excess of 0.070 g/dscm (0.031 grains per dry standard cubic feet (gr/dscf)); and

(2) The owner or operator shall not cause to be discharged into the atmosphere from the thermal dryer any gases which exhibit 20 percent opacity or greater.

(b) Except as provided in paragraph (c) of this section, on and after the date on which the performance test is conducted or required to be completed under § 60.8, whichever date comes first, an owner or operator of a thermal dryer constructed, reconstructed, or modified after April 28, 2008, subject to the provisions of this subpart must meet the applicable standards for PM and opacity, as specified in paragraph (b)(1) of this section. In addition, and except as provided in paragraph (c) of this section, on and after the date on which the performance test is conducted or required to be completed under § 60.8, whichever date comes first, an owner or operator of a thermal dryer constructed, reconstructed, or modified after May 29, 2009, subject to the provisions of this subpart must also meet the applicable standards for sulfur dioxide (SO_2), and combined nitrogen oxides (NO_X) and carbon monoxide (CO) as specified in paragraphs (b)(2) and (b)(3) of this section.

(1) The owner or operator must meet the requirements for PM emissions in paragraphs (b)(1)(i) through (iii) of this section, as applicable to the affected facility.

(i) For each thermal dryer constructed or reconstructed after April 28, 2008, the owner or operator must meet the requirements of (b)(1)(i)(A) and (b)(1)(i)(B).

(A) The owner or operator must not cause to be discharged into the atmosphere from the thermal dryer any gases that contain PM in excess of 0.023 g/dscm (0.010 grains per dry standard cubic feet (gr/dscf)); and

(B) The owner or operator must not cause to be discharged into the atmosphere from the thermal dryer any gases that exhibit 10 percent opacity or greater.

(ii) For each thermal dryer modified after April 28, 2008, the owner or operator must meet the requirements of paragraphs (b)(1)(ii)(A) and (b)(1)(ii)(B) of this section.

(A) The owner or operator must not cause to be discharged to the atmosphere from the affected facility any gases which contain PM in excess of 0.070 g/dscm (0.031 gr/dscf); and

(B) The owner or operator must not cause to be discharged into the atmosphere from the affected facility any gases which exhibit 20 percent opacity or greater.

(2) Except as provided in paragraph (b)(2)(iii) of this section, for each thermal dryer constructed, reconstructed, or modified after May 27, 2009, the owner or operator must meet the requirements for SO_2 emissions in either paragraph (b)(2)(i) or (b)(2)(ii) of this section.

(i) The owner or operator must not cause to be discharged into the atmosphere from the affected facility any gases that contain SO_2 in excess of 85 ng/J (0.20 lb/MMBtu) heat input; or

(ii) The owner or operator must not cause to be discharged into the atmosphere from the affected facility any gases that either contain SO_2 in excess of 520 ng/J (1.20 lb/MMBtu) heat input or contain SO_2 in excess of 10 percent of the potential combustion concentration (*i.e.,* the facility must achieve at least a 90 percent reduction of the potential combustion concentration and may not exceed a maximum emissions rate of 1.2 lb/MMBtu (520 ng/J)).

(iii) Thermal dryers that receive all of their thermal input from a source other than coal or residual oil, that receive all of their thermal input from a source subject to an SO_2 limit under another subpart of this part, or that use waste heat or residual from the combustion of coal or residual oil as their only thermal input are not subject to the SO_2 limits of this section.

(3) Except as provided in paragraph (b)(3)(iii) of this section, the owner or operator must meet the requirements for combined NO_X and CO emissions in paragraph (b)(3)(i) or (b)(3)(ii) of this section, as applicable to the affected facility.

(i) For each thermal dryer constructed after May 27, 2009, the owner or operator must not cause to be discharged into the atmosphere from the affected facility any gases which contain a combined concentration of NO_X and CO in excess of 280 ng/J (0.65 lb/MMBtu) heat input.

(ii) For each thermal dryer reconstructed or modified after May 27, 2009, the owner or operator must not cause to be discharged into the atmosphere from the affected facility any gases which contain combined concentration of NO_X and CO in excess of 430 ng/J (1.0 lb/MMBtu) heat input.

(iii) Thermal dryers that receive all of their thermal input from a source other than coal or residual oil, that receive all of their thermal input from a source subject to a NO_X limit and/or CO limit under another subpart of this part, or that use waste heat or residual from the combustion of coal or residual oil as their only thermal input, are not subject to the combined NO_X and CO limits of this section.

(c) Thermal dryers receiving all of their thermal input from an affected facility covered under another 40 CFR Part 60 subpart must meet the applicable requirements in that subpart but are not subject to the requirements in this subpart.

§ 60.253 Standards for pneumatic coal-cleaning equipment.

(a) On and after the date on which the performance test is conducted or required to be completed under § 60.8, whichever date comes first, an owner or operator of pneumatic coal-cleaning equipment constructed, reconstructed, or modified on or before April 28, 2008, must meet the requirements of paragraphs (a)(1) and (a)(2) of this section.

(1) The owner or operator must not cause to be discharged into the atmosphere from the pneumatic coal-cleaning equipment any gases that contain PM in excess of 0.040 g/dscm (0.017 gr/dscf); and

(2) The owner or operator must not cause to be discharged into the atmosphere from the pneumatic coal-cleaning equipment any gases that exhibit 10 percent opacity or greater.

(b) On and after the date on which the performance test is conducted or required to be completed under § 60.8, whichever date comes first, an owner or operator of pneumatic coal-cleaning equipment constructed, reconstructed, or modified after April 28, 2008, must meet the requirements in paragraphs (b)(1) and (b)(2) of this section.

(1) The owner of operator must not cause to be discharged into the atmosphere from the pneumatic coal-cleaning equipment any gases that contain PM in excess or 0.023 g/dscm (0.010 gr/dscf); and

(2) The owner or operator must not cause to be discharged into the atmosphere from the pneumatic coal-cleaning equipment any gases that exhibit greater than 5 percent opacity.

§ 60.254 Standards for coal processing and conveying equipment, coal storage systems, transfer and loading systems, and open storage piles.

(a) On and after the date on which the performance test is conducted or required to be completed under § 60.8, whichever date comes first, an owner or operator shall not cause to be discharged into the atmosphere from any coal processing and conveying equipment, coal storage system, or coal transfer and loading system processing coal constructed, reconstructed, or modified on or before April 28, 2008, gases which exhibit 20 percent opacity or greater.

(b) On and after the date on which the performance test is conducted or required to be completed under § 60.8, whichever date comes first, an owner or operator of any coal processing and conveying equipment, coal storage system, or coal transfer and loading system processing coal constructed, reconstructed, or modified after April 28, 2008, must meet the requirements in paragraphs (b)(1) through (3) of this section, as applicable to the affected facility.

(1) Except as provided in paragraph (b)(3) of this section, the owner or operator must not cause to be discharged into the atmosphere from the affected facility any gases which exhibit 10 percent opacity or greater.

(2) The owner or operator must not cause to be discharged into the atmosphere from any mechanical vent on an affected facility gases which contain particulate matter in excess of 0.023 g/dscm (0.010 gr/dscf).

(3) Equipment used in the loading, unloading, and conveying operations of open storage piles are not subject to the opacity limitations of paragraph (b)(1) of this section.

(c) The owner or operator of an open storage pile, which includes the equipment used in the loading, unloading, and conveying operations of the affected facility, constructed, reconstructed, or modified after May 27, 2009, must prepare and operate in accordance with a submitted fugitive coal dust emissions control plan that is appropriate for the site conditions as specified in paragraphs (c)(1) through (6) of this section.

(1) The fugitive coal dust emissions control plan must identify and describe the control measures the owner or operator will use to minimize fugitive coal dust emissions from each open storage pile.

(2) For open coal storage piles, the fugitive coal dust emissions control plan must require that one or more of the following control measures be used to minimize to the greatest extent practicable fugitive coal dust: Locating the source inside a partial enclosure, installing and operating a water spray or fogging system, applying appropriate chemical dust suppression agents on the source (when the provisions of paragraph (c)(6) of this section are met), use of a wind barrier, compaction, or use of a vegetative cover. The owner or operator must select, for inclusion in the fugitive coal dust emissions control plan, the control measure or measures listed in this paragraph that are most appropriate for site conditions. The plan must also explain how the measure or measures selected are applicable and appropriate for site conditions. In addition, the plan must be revised as needed to reflect any changing conditions at the source.

(3) Any owner or operator of an affected facility that is required to have a fugitive coal dust emissions control plan may petition the Administrator to approve, for inclusion in the plan for the affected facility, alternative control measures other than those specified in paragraph (c)(2) of this section as specified in paragraphs (c)(3)(i) through (iv) of this section.

(i) The petition must include a description of the alternative control measures, a copy of the fugitive coal dust emissions control plan for the affected facility that includes the alternative control measures, and information sufficient for EPA to evaluate the demonstrations required by paragraph (c)(3)(ii) of this section.

(ii) The owner or operator must either demonstrate that the fugitive coal dust emissions control plan that includes the alternate control measures will provide equivalent overall environmental protection or demonstrate that it is either economically or technically infeasible for the affected facility to use the control measures specifically identified in paragraph (c)(2).

(iii) While the petition is pending, the owner or operator must comply with the fugitive coal dust emissions control plan including the alternative control measures submitted with the petition. Operation in accordance with the plan submitted with the petition shall be deemed to constitute compliance with the requirement to operate in accordance with a fugitive coal dust emissions control plan that contains one of the control measures specifically identified in paragraph (c)(2) of this section while the petition is pending.

(iv) If the petition is approved by the Administrator, the alternative control measures will be approved for inclusion in the fugitive coal dust emissions control plan for the affected facility. In lieu of amending this subpart, a letter will be sent to the facility describing the specific control measures approved. The facility shall make any such letters and the applicable fugitive coal dust emissions control plan available to the public. If the Administrator determines it is appropriate, the conditions and requirements of the letter can be reviewed and changed at any point.

(4) The owner or operator must submit the fugitive coal dust emissions control plan to the Administrator or delegated authority as specified in paragraphs (c)(4)(i) and (c)(4)(ii) of this section.

(i) The plan must be submitted to the Administrator or delegated authority prior to startup of the new, reconstructed, or modified affected facility, or 30 days after the effective date of this rule, whichever is later.

(ii) The plan must be revised as needed to reflect any changing conditions at the source. Such revisions must be dated and submitted to the Administrator or delegated authority before a source can operate pursuant to these revisions. The Administrator or delegated authority may also object to such revisions as specified in paragraph (c)(5) of this section.

(5) The Administrator or delegated authority may object to the fugitive coal dust emissions control plan as specified in paragraphs (c)(5)(i) and (c)(5)(ii) of this section.

(i) The Administrator or delegated authority may object to any fugitive coal dust emissions control plan that it has determined does not meet the requirements of paragraphs (c)(1) and (c)(2) of this section.

(ii) If an objection is raised, the owner or operator, within 30 days from receipt of the objection, must submit a revised fugitive coal dust emissions control plan to the Administrator or delegated authority. The owner or operator must operate in accordance with the revised fugitive coal dust emissions control plan. The Administrator or delegated authority retain the right, under paragraph (c)(5) of this section, to object to the revised control plan if it determines the plan does not meet the requirements of paragraphs (c)(1) and (c)(2) of this section.

(6) Where appropriate chemical dust suppression agents are selected by the owner or operator as a control measure to minimize fugitive coal dust emissions, (1) only chemical dust suppressants with Occupational Safety and Health Administration (OSHA)-compliant material safety data sheets (MSDS) are to be allowed; (2) the MSDS must be included in the fugitive coal dust emissions control plan; and (3) the owner or operator must consider and document in the fugitive coal dust emissions control plan the site-specific impacts associated with the use of such chemical dust suppressants.

§ 60.255 Performance tests and other compliance requirements.

(a) An owner or operator of each affected facility that commenced construction, reconstruction, or modification on or before April 28, 2008, must conduct all performance tests required by § 60.8 to demonstrate compliance with the applicable emission standards using the methods identified in § 60.257.

(b) An owner or operator of each affected facility that commenced construction, reconstruction, or modification after April 28, 2008, must conduct performance tests according to the requirements of § 60.8 and the methods identified in § 60.257 to demonstrate compliance with the applicable emissions standards in this subpart as specified in paragraphs (b)(1) and (2) of this section.

(1) For each affected facility subject to a PM, SO_2 , or combined NO_X and CO emissions standard, an initial performance test must be performed. Thereafter, a new performance test must be conducted according the requirements in paragraphs (b)(1)(i) through (iii) of this section, as applicable.

(i) If the results of the most recent performance test demonstrate that emissions from the affected facility are greater than 50 percent of the applicable emissions standard, a new performance test must be conducted within 12 calendar months of the date that the previous performance test was required to be completed.

(ii) If the results of the most recent performance test demonstrate that emissions from the affected facility are 50 percent or less of the applicable emissions standard, a new performance test must be conducted within 24 calendar months of the date that the previous performance test was required to be completed.

(iii) An owner or operator of an affected facility that has not operated for the 60 calendar days prior to the due date of a performance test is not required to perform the subsequent performance test until 30 calendar days after the next operating day.

(2) For each affected facility subject to an opacity standard, an initial performance test must be performed. Thereafter, a new performance test must be conducted according to the requirements in paragraphs (b)(2)(i) through (iii) of this section, as applicable, except as provided for in paragraphs (e) and (f) of this section. Performance test and other compliance requirements for coal truck dump operations are specified in paragraph (h) of this section.

(i) If any 6-minute average opacity reading in the most recent performance test exceeds half the applicable opacity limit, a new performance test must be conducted within 90 operating days of the date that the previous performance test was required to be completed.

(ii) If all 6-minute average opacity readings in the most recent performance test are equal to or less than half the applicable opacity limit, a new performance test must be conducted within 12 calendar months of the date that the previous performance test was required to be completed.

(iii) An owner or operator of an affected facility continuously monitoring scrubber parameters as specified in § 60.256(b)(2) is exempt from the requirements in paragraphs (b)(2)(i) and (ii) if opacity performance tests are conducted concurrently with (or within a 60-minute period of) PM performance tests.

(c) If any affected coal processing and conveying equipment (*e.g.,* breakers, crushers, screens, conveying systems), coal storage systems, or coal transfer and loading systems that commenced construction, reconstruction, or modification after April 28, 2008, are enclosed in a building, and emissions from the building do not exceed any of the standards in *§* 60.254 that apply to the affected facility, then the facility shall be deemed to be in compliance with such standards.

(d) An owner or operator of an affected facility (other than a thermal dryer) that commenced construction, reconstruction, or modification after April 28, 2008, is subject to a PM emission standard and uses a control device with a design controlled potential PM emissions rate of 1.0 Mg (1.1 tons) per year or less is exempted from the requirements of paragraphs (b)(1)(i) and (ii) of this section provided that the owner or operator meets all of the conditions specified in paragraphs (d)(1) through (3) of this section. This exemption does not apply to thermal dryers.

(1) PM emissions, as determined by the most recent performance test, are less than or equal to the applicable limit,

(2) The control device manufacturer's recommended maintenance procedures are followed, and

(3) All 6-minute average opacity readings from the most recent performance test are equal to or less than half the applicable opacity limit or the monitoring requirements in paragraphs (e) or (f) of this section are followed.

(e) For an owner or operator of a group of up to five of the same type of affected facilities that commenced construction, reconstruction, or modification after April 28, 2008, that are subject to PM emissions standards and use identical control devices, the Administrator or delegated authority may allow the owner or operator to use a single PM performance test for one of the affected control devices to demonstrate that the group of affected facilities is in compliance with the applicable emissions standards provided that the owner or operator meets all of the conditions specified in paragraphs (e)(1) through (3) of this section.

(1) PM emissions from the most recent performance test for each individual affected facility are 90 percent or less of the applicable PM standard;

(2) The manufacturer's recommended maintenance procedures are followed for each control device; and

(3) A performance test is conducted on each affected facility at least once every 5 calendar years.

(f) As an alternative to meeting the requirements in paragraph (b)(2) of this section, an owner or operator of an affected facility that commenced construction, reconstruction, or modification after April 28, 2008, may elect to comply with the requirements in paragraph (f)(1) or (f)(2) of this section.

(1) Monitor visible emissions from each affected facility according to the requirements in paragraphs (f)(1)(i) through (iii) of this section.

(i) Conduct one daily 15-second observation each operating day for each affected facility (during normal operation) when the coal preparation and processing plant is in operation. Each observation must be recorded as either visible emissions observed or no visible emissions observed. Each observer determining the presence of visible emissions must meet the training requirements specified in § 2.3 of Method 22 of appendix A-7 of this part. If visible emissions are observed during any 15-second observation, the owner or operator must adjust the operation of the affected facility and demonstrate within 24 hours that no visible emissions are observed from the affected facility. If visible emissions are observed, a Method 9, of appendix A-4 of this part, performance test must be conducted within 45 operating days.

(ii) Conduct monthly visual observations of all process and control equipment. If any deficiencies are observed, the necessary maintenance must be performed as expeditiously as possible.

(iii) Conduct a performance test using Method 9 of appendix A-4 of this part at least once every 5 calendar years for each affected facility.

(2) Prepare a written site-specific monitoring plan for a digital opacity compliance system for approval by the Administrator or delegated authority. The plan shall require observations of at least one digital image every 15 seconds for 10-minute periods (during normal operation) every operating day. An approvable monitoring plan must include a demonstration that the occurrences of visible emissions are not in excess of 5 percent of the observation period. For reference purposes in preparing the monitoring plan, *see* OAQPS “Determination of Visible Emission Opacity from Stationary Sources Using Computer-Based Photographic Analysis Systems.” This document is available from the U.S. Environmental Protection Agency (U.S. EPA); Office of Air Quality and Planning Standards; Sector Policies and Programs Division; Measurement Group (D243-02), Research Triangle Park, NC 27711. This document is also available on the Technology Transfer Network (TTN) under Emission Measurement Center Preliminary Methods. The monitoring plan approved by the Administrator or delegated authority shall be implemented by the owner or operator.

(g) As an alternative to meeting the requirements in paragraph (b)(2) of this section, an owner or operator of an affected facility that commenced construction, reconstruction, or modification after April 28, 2008, subject to a visible emissions standard under this subpart may install, operate, and maintain a continuous opacity monitoring system (COMS). Each COMS used to comply with provisions of this subpart must be installed, calibrated, maintained, and continuously operated according to the requirements in paragraphs (g)(1) and (2) of this section.

(1) The COMS must meet Performance Specification 1 in 40 CFR part 60, appendix B.

(2) The COMS must comply with the quality assurance requirements in paragraphs (g)(2)(i) through (v) of this section.

(i) The owner or operator must automatically (intrinsic to the opacity monitor) check the zero and upscale (span) calibration drifts at least once daily. For particular COMS, the acceptable range of zero and upscale calibration materials is as defined in the applicable version of Performance Specification 1 in 40 CFR part 60, appendix B.

(ii) The owner or operator must adjust the zero and span whenever the 24-hour zero drift or 24-hour span drift exceeds 4 percent opacity. The COMS must allow for the amount of excess zero and span drift measured at the 24-hour interval checks to be recorded and quantified. The optical surfaces exposed to the effluent gases must be cleaned prior to performing the zero and span drift adjustments, except for systems using automatic zero

adjustments. For systems using automatic zero adjustments, the optical surfaces must be cleaned when the cumulative automatic zero compensation exceeds 4 percent opacity.

(iii) The owner or operator must apply a method for producing a simulated zero opacity condition and an upscale (span) opacity condition using a certified neutral density filter or other related technique to produce a known obscuration of the light beam. All procedures applied must provide a system check of the analyzer internal optical surfaces and all electronic circuitry including the lamp and photodetector assembly.

(iv) Except during periods of system breakdowns, repairs, calibration checks, and zero and span adjustments, the COMS must be in continuous operation and must complete a minimum of one cycle of sampling and analyzing for each successive 10-second period and one cycle of data recording for each successive 6-minute period.

(v) The owner or operator must reduce all data from the COMS to 6-minute averages. Six-minute opacity averages must be calculated from 36 or more data points equally spaced over each 6-minute period. Data recorded during periods of system breakdowns, repairs, calibration checks, and zero and span adjustments must not be included in the data averages. An arithmetic or integrated average of all data may be used.

(h) The owner or operator of each affected coal truck dump operation that commenced construction, reconstruction, or modification after April 28, 2008, must meet the requirements specified in paragraphs (h)(1) through (3) of this section.

(1) Conduct an initial performance test using Method 9 of appendix A-4 of this part according to the requirements in paragraphs (h)(1)(i) and(ii).

(i) Opacity readings shall be taken during the duration of three separate truck dump events. Each truck dump event commences when the truck bed begins to elevate and concludes when the truck bed returns to a horizontal position.

(ii) Compliance with the applicable opacity limit is determined by averaging all 15-second opacity readings made during the duration of three separate truck dump events.

(2) Conduct monthly visual observations of all process and control equipment. If any deficiencies are observed, the necessary maintenance must be performed as expeditiously as possible.

(3) Conduct a performance test using Method 9 of appendix A-4 of this part at least once every 5 calendar years for each affected facility.

§ 60.256 Continuous monitoring requirements.

(a) The owner or operator of each affected facility constructed, reconstructed, or modified on or before April 28, 2008, must meet the monitoring requirements specified in paragraphs (a)(1) and (2) of this section, as applicable to the affected facility.

(1) The owner or operator of any thermal dryer shall install, calibrate, maintain, and continuously operate monitoring devices as follows:

(i) A monitoring device for the measurement of the temperature of the gas stream at the exit of the thermal dryer on a continuous basis. The monitoring device is to be certified by the manufacturer to be accurate within ±1.7 °C (±3 °F).

(ii) For affected facilities that use wet scrubber emission control equipment:

(A) A monitoring device for the continuous measurement of the pressure loss through the venturi constriction of the control equipment. The monitoring device is to be certified by the manufacturer to be accurate within ±1 inch water gauge.

(B) A monitoring device for the continuous measurement of the water supply pressure to the control equipment. The monitoring device is to be certified by the manufacturer to be accurate within ±5 percent of design water supply

pressure. The pressure sensor or tap must be located close to the water discharge point. The Administrator shall have discretion to grant requests for approval of alternative monitoring locations.

(2) All monitoring devices under paragraph (a) of this section are to be recalibrated annually in accordance with procedures under § 60.13(b).

(b) The owner or operator of each affected facility constructed, reconstructed, or modified after April 28, 2008, that has one or more mechanical vents must install, calibrate, maintain, and continuously operate the monitoring devices specified in paragraphs (b)(1) through (3) of this section, as applicable to the mechanical vent and any control device installed on the vent.

(1) For mechanical vents with fabric filters (baghouses) with design controlled potential PM emissions rates of 25 Mg (28 tons) per year or more, a bag leak detection system according to the requirements in paragraph (c) of this section.

(2) For mechanical vents with wet scrubbers, monitoring devices according to the requirements in paragraphs (b)(2)(i) through (iv) of this section.

(i) A monitoring device for the continuous measurement of the pressure loss through the venturi constriction of the control equipment. The monitoring device is to be certified by the manufacturer to be accurate within ±1 inch water gauge.

(ii) A monitoring device for the continuous measurement of the water supply flow rate to the control equipment. The monitoring device is to be certified by the manufacturer to be accurate within ±5 percent of design water supply flow rate.

(iii) A monitoring device for the continuous measurement of the pH of the wet scrubber liquid. The monitoring device is to be certified by the manufacturer to be accurate within ±5 percent of design pH.

(iv) An average value for each monitoring parameter must be determined during each performance test. Each monitoring parameter must then be maintained within 10 percent of the value established during the most recent performance test on an operating day average basis.

(3) For mechanical vents with control equipment other than wet scrubbers, a monitoring device for the continuous measurement of the reagent injection flow rate to the control equipment, as applicable. The monitoring device is to be certified by the manufacturer to be accurate within ±5 percent of design injection flow rate. An average reagent injection flow rate value must be determined during each performance test. The reagent injection flow rate must then be maintained within 10 percent of the value established during the most recent performance test on an operating day average basis.

(c) Each bag leak detection system used to comply with provisions of this subpart must be installed, calibrated, maintained, and continuously operated according to the requirements in paragraphs (c)(1) through (3) of this section.

(1) The bag leak detection system must meet the specifications and requirements in paragraphs (c)(1)(i) through (viii) of this section.

(i) The bag leak detection system must be certified by the manufacturer to be capable of detecting PM emissions at concentrations of 1 milligram per dry standard cubic meter (mg/dscm) (0.00044 grains per actual cubic foot (gr/acf)) or less.

(ii) The bag leak detection system sensor must provide output of relative PM loadings. The owner or operator shall continuously record the output from the bag leak detection system using electronic or other means (*e.g.,* using a strip chart recorder or a data logger).

(iii) The bag leak detection system must be equipped with an alarm system that will sound when the system detects an increase in relative particulate loading over the alarm set point established according to paragraph (c)(1)(iv) of this section, and the alarm must be located such that it can be heard by the appropriate plant personnel.

(iv) In the initial adjustment of the bag leak detection system, the owner or operator must establish, at a minimum, the baseline output by adjusting the sensitivity (range) and the averaging period of the device, the alarm set points, and the alarm delay time.

(v) Following initial adjustment, the owner or operator must not adjust the averaging period, alarm set point, or alarm delay time without approval from the Administrator or delegated authority except as provided in paragraph (c)(2)(vi) of this section.

(vi) Once per quarter, the owner or operator may adjust the sensitivity of the bag leak detection system to account for seasonal effects, including temperature and humidity, according to the procedures identified in the site-specific monitoring plan required by paragraph (c)(2) of this section.

(vii) The owner or operator must install the bag leak detection sensor downstream of the fabric filter.

(viii) Where multiple detectors are required, the system's instrumentation and alarm may be shared among detectors.

(2) The owner or operator must develop and submit to the Administrator or delegated authority for approval a site-specific monitoring plan for each bag leak detection system. This plan must be submitted to the Administrator or delegated authority 30 days prior to startup of the affected facility. The owner or operator must operate and maintain the bag leak detection system according to the site-specific monitoring plan at all times. Each monitoring plan must describe the items in paragraphs (c)(2)(i) through (vi) of this section.

(i) Installation of the bag leak detection system;

(ii) Initial and periodic adjustment of the bag leak detection system, including how the alarm set-point will be established;

(iii) Operation of the bag leak detection system, including quality assurance procedures;

(iv) How the bag leak detection system will be maintained, including a routine maintenance schedule and spare parts inventory list;

(v) How the bag leak detection system output will be recorded and stored; and

(vi) Corrective action procedures as specified in paragraph (c)(3) of this section. In approving the site-specific monitoring plan, the Administrator or delegated authority may allow the owner and operator more than 3 hours to alleviate a specific condition that causes an alarm if the owner or operator identifies in the monitoring plan this specific condition as one that could lead to an alarm, adequately explains why it is not feasible to alleviate this condition within 3 hours of the time the alarm occurs, and demonstrates that the requested time will ensure alleviation of this condition as expeditiously as practicable.

(3) For each bag leak detection system, the owner or operator must initiate procedures to determine the cause of every alarm within 1 hour of the alarm. Except as provided in paragraph (c)(2)(vi) of this section, the owner or operator must alleviate the cause of the alarm within 3 hours of the alarm by taking whatever corrective action(s) are necessary. Corrective actions may include, but are not limited to the following:

(i) Inspecting the fabric filter for air leaks, torn or broken bags or filter media, or any other condition that may cause an increase in PM emissions;

(ii) Sealing off defective bags or filter media;

(iii) Replacing defective bags or filter media or otherwise repairing the control device;

(iv) Sealing off a defective fabric filter compartment;

(v) Cleaning the bag leak detection system probe or otherwise repairing the bag leak detection system; or

(vi) Shutting down the process producing the PM emissions.

§ 60.257 Test methods and procedures.

(a) The owner or operator must determine compliance with the applicable opacity standards as specified in paragraphs (a)(1) through (3) of this section.

(1) Method 9 of appendix A-4 of this part and the procedures in § 60.11 must be used to determine opacity, with the exceptions specified in paragraphs (a)(1)(i) and (ii).

(i) The duration of the Method 9 of appendix A-4 of this part performance test shall be 1 hour (ten 6-minute averages).

(ii) If, during the initial 30 minutes of the observation of a Method 9 of appendix A-4 of this part performance test, all of the 6-minute average opacity readings are less than or equal to half the applicable opacity limit, then the observation period may be reduced from 1 hour to 30 minutes.

(2) To determine opacity for fugitive coal dust emissions sources, the additional requirements specified in paragraphs (a)(2)(i) through (iii) must be used.

(i) The minimum distance between the observer and the emission source shall be 5.0 meters (16 feet), and the sun shall be oriented in the 140-degree sector of the back.

(ii) The observer shall select a position that minimizes interference from other fugitive coal dust emissions sources and make observations such that the line of vision is approximately perpendicular to the plume and wind direction.

(iii) The observer shall make opacity observations at the point of greatest opacity in that portion of the plume where condensed water vapor is not present. Water vapor is not considered a visible emission.

(3) A visible emissions observer may conduct visible emission observations for up to three fugitive, stack, or vent emission points within a 15-second interval if the following conditions specified in paragraphs (a)(3)(i) through (iii) of this section are met.

(i) No more than three emissions points may be read concurrently.

(ii) All three emissions points must be within a 70 degree viewing sector or angle in front of the observer such that the proper sun position can be maintained for all three points.

(iii) If an opacity reading for any one of the three emissions points is within 5 percent opacity from the applicable standard (excluding readings of zero opacity), then the observer must stop taking readings for the other two points and continue reading just that single point.

(b) The owner or operator must conduct all performance tests required by § 60.8 to demonstrate compliance with the applicable emissions standards specified in § 60.252 according to the requirements in § 60.8 using the applicable test methods and procedures in paragraphs (b)(1) through (8) of this section.

(1) Method 1 or 1A of appendix A-4 of this part shall be used to select sampling port locations and the number of traverse points in each stack or duct. Sampling sites must be located at the outlet of the control device (or at the outlet of the emissions source if no control device is present) prior to any releases to the atmosphere.

(2) Method 2, 2A, 2C, 2D, 2F, or 2G of appendix A-4 of this part shall be used to determine the volumetric flow rate of the stack gas.

(3) Method 3, 3A, or 3B of appendix A-4 of this part shall be used to determine the dry molecular weight of the stack gas. The owner or operator may use ANSI/ASME PTC 19.10-1981, “Flue and Exhaust Gas Analyses (incorporated by reference— *see* § 60.17) as an alternative to Method 3B of appendix A-2 of this part.

(4) Method 4 of appendix A-4 of this part shall be used to determine the moisture content of the stack gas.

(5) Method 5, 5B or 5D of appendix A-4 of this part or Method 17 of appendix A-7 of this part shall be used to determine the PM concentration as follows:

(i) The sampling time and sample volume for each run shall be at least 60 minutes and 0.85 dscm (30 dscf). Sampling shall begin no less than 30 minutes after startup and shall terminate before shutdown procedures begin. A minimum of three valid test runs are needed to comprise a PM performance test.

(ii) Method 5 of appendix A of this part shall be used only to test emissions from affected facilities without wet flue gas desulfurization (FGD) systems.

(iii) Method 5B of appendix A of this part is to be used only after wet FGD systems.

(iv) Method 5D of appendix A-4 of this part shall be used for positive pressure fabric filters and other similar applications (*e.g.,* stub stacks and roof vents).

(v) Method 17 of appendix A-6 of this part may be used at facilities with or without wet scrubber systems provided the stack gas temperature does not exceed a temperature of 160 ° C (320 ° F). The procedures of sections 8.1 and 11.1 of Method 5B of appendix A-3 of this part may be used in Method 17 of appendix A-6 of this part only if it is used after a wet FGD system. Do not use Method 17 of appendix A-6 of this part after wet FGD systems if the effluent is saturated or laden with water droplets.

(6) Method 6, 6A, or 6C of appendix A-4 of this part shall be used to determine the SO_2 concentration. A minimum of three valid test runs are needed to comprise an SO_2 performance test.

(7) Method 7 or 7E of appendix A-4 of this part shall be used to determine the NO_X concentration. A minimum of three valid test runs are needed to comprise an NO_X performance test.

(8) Method 10 of appendix A-4 of this part shall be used to determine the CO concentration. A minimum of three valid test runs are needed to comprise a CO performance test. CO performance tests are conducted concurrently (or within a 60-minute period) with NO_X performance tests.

§ 60.258 Reporting and recordkeeping.

(a) The owner or operator of a coal preparation and processing plant that commenced construction, reconstruction, or modification after April 28, 2008, shall maintain in a logbook (written or electronic) on-site and make it available upon request. The logbook shall record the following:

(1) The manufacturer's recommended maintenance procedures and the date and time of any maintenance and inspection activities and the results of those activities. Any variance from manufacturer recommendation, if any, shall be noted.

(2) The date and time of periodic coal preparation and processing plant visual observations, noting those sources with visible emissions along with corrective actions taken to reduce visible emissions. Results from the actions shall be noted.

(3) The amount and type of coal processed each calendar month.

(4) The amount of chemical stabilizer or water purchased for use in the coal preparation and processing plant.

(5) Monthly certification that the dust suppressant systems were operational when any coal was processed and that manufacturer's recommendations were followed for all control systems. Any variance from the manufacturer's recommendations, if any, shall be noted.

(6) Monthly certification that the fugitive coal dust emissions control plan was implemented as described. Any variance from the plan, if any, shall be noted. A copy of the applicable fugitive coal dust emissions control plan and any letters from the Administrator providing approval of any alternative control measures shall be maintained with the logbook. Any actions, *e.g.* objections, to the plan and any actions relative to the alternative control measures, *e.g.* approvals, shall be noted in the logbook as well.

(7) For each bag leak detection system, the owner or operator must keep the records specified in paragraphs (a)(7)(i) through (iii) of this section.

(i) Records of the bag leak detection system output;

(ii) Records of bag leak detection system adjustments, including the date and time of the adjustment, the initial bag leak detection system settings, and the final bag leak detection settings; and

(iii) The date and time of all bag leak detection system alarms, the time that procedures to determine the cause of the alarm were initiated, the cause of the alarm, an explanation of the actions taken, the date and time the cause of the alarm was alleviated, and whether the cause of the alarm was alleviated within 3 hours of the alarm.

(8) A copy of any applicable monitoring plan for a digital opacity compliance system and monthly certification that the plan was implemented as described. Any variance from plan, if any, shall be noted.

(9) During a performance test of a wet scrubber, and each operating day thereafter, the owner or operator shall record the measurements of the scrubber pressure loss, water supply flow rate, and pH of the wet scrubber liquid.

(10) During a performance test of control equipment other than a wet scrubber, and each operating day thereafter, the owner or operator shall record the measurements of the reagent injection flow rate, as applicable.

(b) For the purpose of reports required under section 60.7(c), any owner operator subject to the provisions of this subpart also shall report semiannually periods of excess emissions as follow:

(1) The owner or operator of an affected facility with a wet scrubber shall submit semiannual reports to the Administrator or delegated authority of occurrences when the measurements of the scrubber pressure loss, water supply flow rate, or pH of the wet scrubber liquid vary by more than 10 percent from the average determined during the most recent performance test.

(2) The owner or operator of an affected facility with control equipment other than a wet scrubber shall submit semiannual reports to the Administrator or delegated authority of occurrences when the measurements of the reagent injection flow rate, as applicable, vary by more than 10 percent from the average determined during the most recent performance test.

(3) All 6-minute average opacities that exceed the applicable standard.

(c) The owner or operator of an affected facility shall submit the results of initial performance tests to the Administrator or delegated authority, consistent with the provisions of section 60.8. The owner or operator who elects to comply with the reduced performance testing provisions of sections 60.255(c) or (d) shall include in the performance test report identification of each affected facility that will be subject to the reduced testing. The owner or operator electing to comply with section 60.255(d) shall also include information which demonstrates that the control devices are identical.

(d) After July 1, 2011, within 60 days after the date of completing each performance evaluation conducted to demonstrate compliance with this subpart, the owner or operator of the affected facility must submit the test data to EPA by successfully entering the data electronically into EPA's WebFIRE data base available at *http://cfpub.epa.gov/oarweb/index.cfm?action=fire.main.* For performance tests that cannot be entered into WebFIRE (*i.e.,* Method 9 of appendix A-4 of this part opacity performance tests) the owner or operator of the affected facility must mail a summary copy to United States Environmental Protection Agency; Energy Strategies Group; 109 TW Alexander DR; mail code: D243-01; RTP, NC 27711.

Attachment D
To Part 70 Operating Permit Renewal No. T089-29907-00121

[Downloaded from the eCFR on June 5, 2013]

Electronic Code of Federal Regulations

Title 40: Protection of Environment

40 CFR 60, Subpart D—Standards of Performance for Fossil-Fuel-Fired Steam Generators

Source: 72 FR 32717, June 13, 2007, unless otherwise noted.

§ 60.40 Applicability and designation of affected facility.

(a) The affected facilities to which the provisions of this subpart apply are:

(1) Each fossil-fuel-fired steam generating unit of more than 73 megawatts (MW) heat input rate (250 million British thermal units per hour (MMBtu/hr)).

(2) Each fossil-fuel and wood-residue-fired steam generating unit capable of firing fossil fuel at a heat input rate of more than 73 MW (250 MMBtu/hr).

(b) Any change to an existing fossil-fuel-fired steam generating unit to accommodate the use of combustible materials, other than fossil fuels as defined in this subpart, shall not bring that unit under the applicability of this subpart.

(c) Except as provided in paragraph (d) of this section, any facility under paragraph (a) of this section that commenced construction or modification after August 17, 1971, is subject to the requirements of this subpart.

(d) The requirements of §§ 60.44 (a)(4), (a)(5), (b) and (d), and 60.45(f)(4)(vi) are applicable to lignite-fired steam generating units that commenced construction or modification after December 22, 1976.

(e) Any facility subject to either subpart Da or KKKK of this part is not subject to this subpart.

[72 FR 32717, June 13, 2007, as amended at 77 FR 9447, Feb. 16, 2012]

§ 60.41 Definitions.

As used in this subpart, all terms not defined herein shall have the meaning given them in the Act, and in subpart A of this part.

Boiler operating day means a 24-hour period between 12 midnight and the following midnight during which any fuel is combusted at any time in the steam-generating unit. It is not necessary for fuel to be combusted the entire 24-hour period.

Coal means all solid fuels classified as anthracite, bituminous, subbituminous, or lignite by ASTM D388 (incorporated by reference, see § 60.17).

Coal refuse means waste-products of coal mining, cleaning, and coal preparation operations (e.g. culm, gob, etc.) containing coal, matrix material, clay, and other organic and inorganic material.

Fossil fuel means natural gas, petroleum, coal, and any form of solid, liquid, or gaseous fuel derived from such materials for the purpose of creating useful heat.

Fossil fuel and wood residue-fired steam generating unit means a furnace or boiler used in the process of burning fossil fuel and wood residue for the purpose of producing steam by heat transfer.

Fossil-fuel-fired steam generating unit means a furnace or boiler used in the process of burning fossil fuel for the purpose of producing steam by heat transfer.

Natural gas means a fluid mixture of hydrocarbons (e.g., methane, ethane, or propane), composed of at least 70 percent methane by volume or that has a gross calorific value between 35 and 41 megajoules (MJ) per dry standard cubic meter (950 and 1,100 Btu per dry standard cubic foot), that maintains a gaseous state under ISO conditions. In addition, *natural gas* contains 20.0 grains or less of total sulfur per 100 standard cubic feet. Finally, natural gas does not include the following gaseous fuels: landfill gas, digester gas, refinery gas, sour gas, blast furnace gas, coal-derived gas, producer gas, coke oven gas, or any gaseous fuel produced in a process which might result in highly variable sulfur content or heating value.

Wood residue means bark, sawdust, slabs, chips, shavings, mill trim, and other wood products derived from wood processing and forest management operations.

[72 FR 32717, June 13, 2007, as amended at 77 FR 9447, Feb. 16, 2012]

§ 60.42 Standard for particulate matter (PM).

(a) Except as provided under paragraphs (b), (c), (d), and (e) of this section, on and after the date on which the performance test required to be conducted by § 60.8 is completed, no owner or operator subject to the provisions of this subpart shall cause to be discharged into the atmosphere from any affected facility any gases that:

(1) Contain PM in excess of 43 nanograms per joule (ng/J) heat input (0.10 lb/MMBtu) derived from fossil fuel or fossil fuel and wood residue.

(2) Exhibit greater than 20 percent opacity except for one six-minute period per hour of not more than 27 percent opacity.

(b)(1) On or after December 28, 1979, no owner or operator shall cause to be discharged into the atmosphere from the Southwestern Public Service Company's Harrington Station #1, in Amarillo, TX, any gases which exhibit greater than 35 percent opacity, except that a maximum or 42 percent opacity shall be permitted for not more than 6 minutes in any hour.

(2) Interstate Power Company shall not cause to be discharged into the atmosphere from its Lansing Station Unit No. 4 in Lansing, IA, any gases which exhibit greater than 32 percent opacity, except that a maximum of 39 percent opacity shall be permitted for not more than six minutes in any hour.

(c) As an alternate to meeting the requirements of paragraph (a) of this section, an owner or operator that elects to install, calibrate, maintain, and operate a continuous emissions monitoring systems (CEMS) for measuring PM emissions can petition the Administrator (in writing) to comply with § 60.42Da(a) of subpart Da of this part. If the Administrator grants the petition, the source will from then on (unless the unit is modified or reconstructed in the future) have to comply with the requirements in § 60.42Da(a) of subpart Da of this part.

(d) An owner or operator of an affected facility that combusts only natural gas is exempt from the PM and opacity standards specified in paragraph (a) of this section.

(e) An owner or operator of an affected facility that combusts only gaseous or liquid fossil fuel (excluding residual oil) with potential SO_2 emissions rates of 26 ng/J (0.060 lb/MMBtu) or less and that does not use post-combustion technology to reduce emissions of SO_2 or PM is exempt from the PM standards specified in paragraph (a) of this section.

[60 FR 65415, Dec. 19, 1995, as amended at 76 FR 3522, Jan. 20, 2011; 74 FR 5077, Jan. 28, 2009; 77 FR 9447, Feb. 16, 2012]

§ 60.43 Standard for sulfur dioxide (SO2).

(a) Except as provided under paragraph (d) of this section, on and after the date on which the performance test required to be conducted by § 60.8 is completed, no owner or operator subject to the provisions of this subpart shall cause to be discharged into the atmosphere from any affected facility any gases that contain SO_2 in excess of:

(1) 340 ng/J heat input (0.80 lb/MMBtu) derived from liquid fossil fuel or liquid fossil fuel and wood residue.

(2) 520 ng/J heat input (1.2 lb/MMBtu) derived from solid fossil fuel or solid fossil fuel and wood residue, except as provided in paragraph (e) of this section.

(b) Except as provided under paragraph (d) of this section, when different fossil fuels are burned simultaneously in any combination, the applicable standard (in ng/J) shall be determined by proration using the following formula:

$$PS_{SO_2} = \frac{y\,(340) + z\,(520)}{(y + z)}$$

Where:

$PS_{SO\ 2}$ = Prorated standard for S_{O2} when burning different fuels simultaneously, in ng/J heat input derived from all fossil fuels or from all fossil fuels and wood residue fired;

y = Percentage of total heat input derived from liquid fossil fuel; and

z = Percentage of total heat input derived from solid fossil fuel.

(c) Compliance shall be based on the total heat input from all fossil fuels burned, including gaseous fuels.

(d) As an alternate to meeting the requirements of paragraphs (a) and (b) of this section, an owner or operator can petition the Administrator (in writing) to comply with § 60.43Da(i)(3) of subpart Da of this part or comply with § 60.42b(k)(4) of subpart Db of this part, as applicable to the affected source. If the Administrator grants the petition, the source will from then on (unless the unit is modified or reconstructed in the future) have to comply with the requirements in § 60.43Da(i)(3) of subpart Da of this part or § 60.42b(k)(4) of subpart Db of this part, as applicable to the affected source.

(e) Units 1 and 2 (as defined in appendix G of this part) at the Newton Power Station owned or operated by the Central Illinois Public Service Company will be in compliance with paragraph (a)(2) of this section if Unit 1 and Unit 2 individually comply with paragraph (a)(2) of this section or if the combined emission rate from Units 1 and 2 does not exceed 470 ng/J (1.1 lb/MMBtu) combined heat input to Units 1 and 2.

[60 FR 65415, Dec. 19, 1995, as amended at 74 FR 5077, Jan. 28, 2009]

§ 60.44 Standard for nitrogen oxides (NOX).

(a) Except as provided under paragraph (e) of this section, on and after the date on which the performance test required to be conducted by § 60.8 is completed, no owner or operator subject to the provisions of this subpart shall cause to be discharged into the atmosphere from any affected facility any gases that contain NO_X , expressed as NO_2 in excess of:

(1) 86 ng/J heat input (0.20 lb/MMBtu) derived from gaseous fossil fuel.

(2) 129 ng/J heat input (0.30 lb/MMBtu) derived from liquid fossil fuel, liquid fossil fuel and wood residue, or gaseous fossil fuel and wood residue.

(3) 300 ng/J heat input (0.70 lb/MMBtu) derived from solid fossil fuel or solid fossil fuel and wood residue (except lignite or a solid fossil fuel containing 25 percent, by weight, or more of coal refuse).

(4) 260 ng/J heat input (0.60 lb MMBtu) derived from lignite or lignite and wood residue (except as provided under paragraph (a)(5) of this section).

(5) 340 ng/J heat input (0.80 lb MMBtu) derived from lignite which is mined in North Dakota, South Dakota, or Montana and which is burned in a cyclone-fired unit.

(b) Except as provided under paragraphs (c), (d), and (e) of this section, when different fossil fuels are burned simultaneously in any combination, the applicable standard (in ng/J) is determined by proration using the following formula:

$$PS_{NO_x} = \frac{w\,(260) + x\,(86) + y\,(130) + z\,(300)}{(w + x + y + z)}$$

Where:

$PS_{NO\ X}$ = Prorated standard for NO_X when burning different fuels simultaneously, in ng/J heat input derived from all fossil fuels fired or from all fossil fuels and wood residue fired;

w = Percentage of total heat input derived from lignite;

x = Percentage of total heat input derived from gaseous fossil fuel;

y = Percentage of total heat input derived from liquid fossil fuel; and

z = Percentage of total heat input derived from solid fossil fuel (except lignite).

(c) When a fossil fuel containing at least 25 percent, by weight, of coal refuse is burned in combination with gaseous, liquid, or other solid fossil fuel or wood residue, the standard for NO_X does not apply.

(d) Except as provided under paragraph (e) of this section, cyclone-fired units which burn fuels containing at least 25 percent of lignite that is mined in North Dakota, South Dakota, or Montana remain subject to paragraph (a)(5) of this section regardless of the types of fuel combusted in combination with that lignite.

(e) As an alternate to meeting the requirements of paragraphs (a), (b), and (d) of this section, an owner or operator can petition the Administrator (in writing) to comply with § 60.44Da(e)(3) of subpart Da of this part. If the Administrator grants the petition, the source will from then on (unless the unit is modified or reconstructed in the future) have to comply with the requirements in § 60.44Da(e)(3) of subpart Da of this part.

§ 60.45 Emissions and fuel monitoring.

(a) Each owner or operator of an affected facility subject to the applicable emissions standard shall install, calibrate, maintain, and operate continuous opacity monitoring system (COMS) for measuring opacity and a continuous emissions monitoring system (CEMS) for measuring SO_2 emissions, NO_X emissions, and either oxygen (O_2) or carbon dioxide (CO_2) except as provided in paragraph (b) of this section.

(b) Certain of the CEMS and COMS requirements under paragraph (a) of this section do not apply to owners or operators under the following conditions:

(1) For a fossil-fuel-fired steam generator that combusts only gaseous or liquid fossil fuel (excluding residual oil) with potential SO_2 emissions rates of 26 ng/J (0.060 lb/MMBtu) or less and that does not use post-combustion technology to reduce emissions of SO_2 or PM, COMS for measuring the opacity of emissions and CEMS for measuring SO_2

emissions are not required if the owner or operator monitors SO_2 emissions by fuel sampling and analysis or fuel receipts.

(2) For a fossil-fuel-fired steam generator that does not use a flue gas desulfurization device, a CEMS for measuring SO_2 emissions is not required if the owner or operator monitors SO_2 emissions by fuel sampling and analysis.

(3) Notwithstanding § 60.13(b), installation of a CEMS for NO_X may be delayed until after the initial performance tests under § 60.8 have been conducted. If the owner or operator demonstrates during the performance test that emissions of NO_X are less than 70 percent of the applicable standards in § 60.44, a CEMS for measuring NO_X emissions is not required. If the initial performance test results show that NO_X emissions are greater than 70 percent of the applicable standard, the owner or operator shall install a CEMS for NO_X within one year after the date of the initial performance tests under § 60.8 and comply with all other applicable monitoring requirements under this part.

(4) If an owner or operator is not required to and elects not to install any CEMS for either SO_2 or NO_X , a CEMS for measuring either O_2 or CO_2 is not required.

(5) For affected facilities using a PM CEMS, a bag leak detection system to monitor the performance of a fabric filter (baghouse) according to the most current requirements in § 60.48Da of this part, or an ESP predictive model to monitor the performance of the ESP developed in accordance and operated according to the most current requirements in section § 60.48Da of this part a COMS is not required.

(6) A COMS for measuring the opacity of emissions is not required for an affected facility that does not use post-combustion technology (except a wet scrubber) for reducing PM, SO_2 , or carbon monoxide (CO) emissions, burns only gaseous fuels or fuel oils that contain less than or equal to 0.30 weight percent sulfur, and is operated such that emissions of CO to the atmosphere from the affected source are maintained at levels less than or equal to 0.15 lb/MMBtu on a boiler operating day average basis. Owners and operators of affected sources electing to comply with this paragraph must demonstrate compliance according to the procedures specified in paragraphs (b)(6)(i) through (iv) of this section.

(i) You must monitor CO emissions using a CEMS according to the procedures specified in paragraphs (b)(6)(i)(A) through (D) of this section.

(A) The CO CEMS must be installed, certified, maintained, and operated according to the provisions in § 60.58b(i)(3) of subpart Eb of this part.

(B) Each 1-hour CO emissions average is calculated using the data points generated by the CO CEMS expressed in parts per million by volume corrected to 3 percent oxygen (dry basis).

(C) At a minimum, valid 1-hour CO emissions averages must be obtained for at least 90 percent of the operating hours on a 30-day rolling average basis. The 1-hour averages are calculated using the data points required in § 60.13(h)(2).

(D) Quarterly accuracy determinations and daily calibration drift tests for the CO CEMS must be performed in accordance with procedure 1 in appendix F of this part.

(ii) You must calculate the 1-hour average CO emissions levels for each boiler operating day by multiplying the average hourly CO output concentration measured by the CO CEMS times the corresponding average hourly flue gas flow rate and divided by the corresponding average hourly heat input to the affected source. The 24-hour average CO emission level is determined by calculating the arithmetic average of the hourly CO emission levels computed for each boiler operating day.

(iii) You must evaluate the preceding 24-hour average CO emission level each boiler operating day excluding periods of affected source startup, shutdown, or malfunction. If the 24-hour average CO emission level is greater than 0.15 lb/MMBtu, you must initiate investigation of the relevant equipment and control systems within 24 hours of the first discovery of the high emission incident and, take the appropriate corrective action as soon as practicable to adjust control settings or repair equipment to reduce the 24-hour average CO emission level to 0.15 lb/MMBtu or less.

(iv) You must record the CO measurements and calculations performed according to paragraph (b)(6) of this section and any corrective actions taken. The record of corrective action taken must include the date and time during which the 24-hour average CO emission level was greater than 0.15 lb/MMBtu, and the date, time, and description of the corrective action.

(7) An owner or operator of an affected facility subject to an opacity standard under § 60.42 that elects to not use a COMS because the affected facility burns only fuels as specified under paragraph (b)(1) of this section, monitors PM emissions as specified under paragraph (b)(5) of this section, or monitors CO emissions as specified under paragraph (b)(6) of this section, shall conduct a performance test using Method 9 of appendix A-4 of this part and the procedures in § 60.11 to demonstrate compliance with the applicable limit in § 60.42 by April 29, 2011 or within 45 days after stopping use of an existing COMS, whichever is later, and shall comply with either paragraph (b)(7)(i), (b)(7)(ii), or (b)(7)(iii) of this section. The observation period for Method 9 of appendix A-4 of this part performance tests may be reduced from 3 hours to 60 minutes if all 6-minute averages are less than 10 percent and all individual 15-second observations are less than or equal to 20 percent during the initial 60 minutes of observation. The permitting authority may exempt owners or operators of affected facilities burning only natural gas from the opacity monitoring requirements.

(i) Except as provided in paragraph (b)(7)(ii) or (b)(7)(iii) of this section, the owner or operator shall conduct subsequent Method 9 of appendix A-4 of this part performance tests using the procedures in paragraph (b)(7) of this section according to the applicable schedule in paragraphs (b)(7)(i)(A) through (b)(7)(i)(D) of this section, as determined by the most recent Method 9 of appendix A-4 of this part performance test results.

(A) If no visible emissions are observed, a subsequent Method 9 of appendix A-4 of this part performance test must be completed within 12 calendar months from the date that the most recent performance test was conducted or within 45 days of the next day that fuel with an opacity standard is combusted, whichever is later;

(B) If visible emissions are observed but the maximum 6-minute average opacity is less than or equal to 5 percent, a subsequent Method 9 of appendix A-4 of this part performance test must be completed within 6 calendar months from the date that the most recent performance test was conducted or within 45 days of the next day that fuel with an opacity standard is combusted, whichever is later;

(C) If the maximum 6-minute average opacity is greater than 5 percent but less than or equal to 10 percent, a subsequent Method 9 of appendix A-4 of this part performance test must be completed within 3 calendar months from the date that the most recent performance test was conducted or within 45 days of the next day that fuel with an opacity standard is combusted, whichever is later; or

(D) If the maximum 6-minute average opacity is greater than 10 percent, a subsequent Method 9 of appendix A-4 of this part performance test must be completed within 45 calendar days from the date that the most recent performance test was conducted.

(ii) If the maximum 6-minute opacity is less than 10 percent during the most recent Method 9 of appendix A-4 of this part performance test, the owner or operator may, as an alternative to performing subsequent Method 9 of appendix A-4 of this part performance test, elect to perform subsequent monitoring using Method 22 of appendix A-7 of this part according to the procedures specified in paragraphs (b)(7)(ii)(A) and (B) of this section.

(A) The owner or operator shall conduct 10 minute observations (during normal operation) each operating day the affected facility fires fuel for which an opacity standard is applicable using Method 22 of appendix A-7 of this part and demonstrate that the sum of the occurrences of any visible emissions is not in excess of 5 percent of the observation period (*i.e.* , 30 seconds per 10 minute period). If the sum of the occurrence of any visible emissions is greater than 30 seconds during the initial 10 minute observation, immediately conduct a 30 minute observation. If the sum of the occurrence of visible emissions is greater than 5 percent of the observation period (i.e., 90 seconds per 30 minute period), the owner or operator shall either document and adjust the operation of the facility and demonstrate within 24 hours that the sum of the occurrence of visible emissions is equal to or less than 5 percent during a 30 minute observation (i.e., 90 seconds) or conduct a new Method 9 of appendix A-4 of this part performance test using the procedures in paragraph (b)(7) of this section within 45 calendar days according to the requirements in § 60.46(b)(3).

(B) If no visible emissions are observed for 10 operating days during which an opacity standard is applicable, observations can be reduced to once every 7 operating days during which an opacity standard is applicable. If any visible emissions are observed, daily observations shall be resumed.

(iii) If the maximum 6-minute opacity is less than 10 percent during the most recent Method 9 of appendix A-4 of this part performance test, the owner or operator may, as an alternative to performing subsequent Method 9 of appendix A-4 performance tests, elect to perform subsequent monitoring using a digital opacity compliance system according to a site-specific monitoring plan approved by the Administrator. The observations shall be similar, but not necessarily identical, to the requirements in paragraph (b)(7)(ii) of this section. For reference purposes in preparing the monitoring plan, see OAQPS "Determination of Visible Emission Opacity from Stationary Sources Using Computer-Based Photographic Analysis Systems." This document is available from the U.S. Environmental Protection Agency (U.S. EPA); Office of Air Quality and Planning Standards; Sector Policies and Programs Division; Measurement Policy Group (D243-02), Research Triangle Park, NC 27711. This document is also available on the Technology Transfer Network (TTN) under Emission Measurement Center Preliminary Methods.

(8) A COMS for measuring the opacity of emissions is not required for an affected facility at which the owner or operator installs, calibrates, operates, and maintains a particulate matter continuous parametric monitoring system (PM CPMS) according to the requirements specified in subpart UUUUU of part 63.

(c) For performance evaluations under § 60.13(c) and calibration checks under § 60.13(d), the following procedures shall be used:

(1) Methods 6, 7, and 3B of appendix A of this part, as applicable, shall be used for the performance evaluations of SO_2 and NO_X continuous monitoring systems. Acceptable alternative methods for Methods 6, 7, and 3B of appendix A of this part are given in § 60.46(d).

(2) Sulfur dioxide or nitric oxide, as applicable, shall be used for preparing calibration gas mixtures under Performance Specification 2 of appendix B to this part.

(3) For affected facilities burning fossil fuel(s), the span value for a continuous monitoring system measuring the opacity of emissions shall be 80, 90, or 100 percent. For a continuous monitoring system measuring sulfur oxides or NO_X the span value shall be determined using one of the following procedures:

(i) Except as provided under paragraph (c)(3)(ii) of this section, SO_2 and NO_X span values shall be determined as follows:

	In parts per million	
Fossil fuel	**Span value for SO_2**	**Span value for NO_X**
Gas	([1])	500.
Liquid	1,000	500.
Solid	1,500	1,000.
Combinations	1,000y + 1,500z	500 (x + y) + 1,000z.

[1] Not applicable.

Where:

x = Fraction of total heat input derived from gaseous fossil fuel;

y = Fraction of total heat input derived from liquid fossil fuel; and

z = Fraction of total heat input derived from solid fossil fuel.

(ii) As an alternative to meeting the requirements of paragraph (c)(3)(i) of this section, the owner or operator of an affected facility may elect to use the SO_2 and NO_X span values determined according to sections 2.1.1 and 2.1.2 in appendix A to part 75 of this chapter.

(4) All span values computed under paragraph (c)(3)(i) of this section for burning combinations of fossil fuels shall be rounded to the nearest 500 ppm. Span values that are computed under paragraph (c)(3)(ii) of this section shall be rounded off according to the applicable procedures in section 2 of appendix A to part 75 of this chapter.

(5) For a fossil-fuel-fired steam generator that simultaneously burns fossil fuel and nonfossil fuel, the span value of all CEMS shall be subject to the Administrator's approval.

(d) [Reserved]

(e) For any CEMS installed under paragraph (a) of this section, the following conversion procedures shall be used to convert the continuous monitoring data into units of the applicable standards (ng/J, lb/MMBtu):

(1) When a CEMS for measuring O_2 is selected, the measurement of the pollutant concentration and O_2 concentration shall each be on a consistent basis (wet or dry). Alternative procedures approved by the Administrator shall be used when measurements are on a wet basis. When measurements are on a dry basis, the following conversion procedure shall be used:

$$E = CF\left(\frac{20.9}{(20.9 - \%O_2)}\right)$$

Where E, C, F, and $\%O_2$ are determined under paragraph (f) of this section.

(2) When a CEMS for measuring CO_2 is selected, the measurement of the pollutant concentration and CO_2 concentration shall each be on a consistent basis (wet or dry) and the following conversion procedure shall be used:

$$E = CF_c\left(\frac{100}{\%CO_2}\right)$$

Where E, C, F_c and $\%CO_2$ are determined under paragraph (f) of this section.

(f) The values used in the equations under paragraphs (e)(1) and (2) of this section are derived as follows:

(1) E = pollutant emissions, ng/J (lb/MMBtu).

(2) C = pollutant concentration, ng/dscm (lb/dscf), determined by multiplying the average concentration (ppm) for each one-hour period by 4.15×10^4 M ng/dscm per ppm (2.59×10^{-9} M lb/dscf per ppm) where M = pollutant molecular weight, g/g-mole (lb/lb-mole). M = 64.07 for SO_2 and 46.01 for NO_X .

(3) $\%O_2$, $\%CO_2$ = O_2 or CO_2 volume (expressed as percent), determined with equipment specified under paragraph (a) of this section.

(4) F, F_c = a factor representing a ratio of the volume of dry flue gases generated to the calorific value of the fuel combusted (F), and a factor representing a ratio of the volume of CO_2 generated to the calorific value of the fuel combusted (F_c), respectively. Values of F and F_c are given as follows:

(i) For anthracite coal as classified according to ASTM D388 (incorporated by reference, see § 60.17), F = $2,723 \times 10^{-17}$ dscm/J (10,140 dscf/MMBtu) and $F_c = 0.532 \times 10^{-17}$ scm CO_2 /J (1,980 scf CO_2 /MMBtu).

(ii) For subbituminous and bituminous coal as classified according to ASTM D388 (incorporated by reference, see § 60.17), F = 2.637×10^{-7} dscm/J (9,820 dscf/MMBtu) and $F_c = 0.486 \times 10^{-7}$ scm CO_2 /J (1,810 scf CO_2 /MMBtu).

(iii) For liquid fossil fuels including crude, residual, and distillate oils, F = 2.476×10^{-7} dscm/J (9,220 dscf/MMBtu) and $F_c = 0.384 \times 10^{-7}$ scm CO_2 /J (1,430 scf CO_2 /MMBtu).

(iv) For gaseous fossil fuels, F = 2.347×10^{-7} dscm/J (8,740 dscf/MMBtu). For natural gas, propane, and butane fuels, $F_c = 0.279 \times 10^{-7}$ scm CO_2 /J (1,040 scf CO_2 /MMBtu) for natural gas, 0.322×10^{-7} scm CO_2 /J (1,200 scf CO_2 /MMBtu) for propane, and 0.338×10^{-7} scm CO_2 /J (1,260 scf CO_2 /MMBtu) for butane.

(v) For bark F = 2.589×10^{-7} dscm/J (9,640 dscf/MMBtu) and $F_c = 0.500 \times 10^{-7}$ scm CO_2 /J (1,840 scf CO_2 /MMBtu). For wood residue other than bark F = 2.492×10^{-7} dscm/J (9,280 dscf/MMBtu) and $F_c = 0.494 \times 10^{-7}$ scm CO_2 /J (1,860 scf CO_2 /MMBtu).

(vi) For lignite coal as classified according to ASTM D388 (incorporated by reference, see § 60.17), F = 2.659×10^{-7} dscm/J (9,900 dscf/MMBtu) and $F_c = 0.516 \times 10^{-7}$ scm CO_2 /J (1,920 scf CO_2 /MMBtu).

(5) The owner or operator may use the following equation to determine an F factor (dscm/J or dscf/MMBtu) on a dry basis (if it is desired to calculate F on a wet basis, consult the Administrator) or Fc factor (scm CO_2 /J, or scf CO_2 /MMBtu) on either basis in lieu of the F or F_c factors specified in paragraph (f)(4) of this section:

$$F = 10^{-6}\,\frac{[227.2\ (\%H) + 95.5\ (\%C) + 35.6\ (\%S) + 8.7\ (\%N) - 28.7\ (\%O)]}{GCV}$$

$$F_c = \frac{2.0 \times 10^{-5}(\%C)}{GCV\ (SI\ units)}$$

$$F = 10^{-6}\,\frac{[3.64\ (\%H) + 1.53\ (\%C) + 0.57\ (\%S) + 0.14\ (\%N) - 0.46\ (\%O)]}{GCV\ (English\ units)}$$

$$F_c = \frac{20.0\ (\%C)}{GCV\ (SI\ units)}$$

$$F_c = \frac{321 \times 10^{3}\ (\%C)}{GCV\ (English\ units)}$$

(i) %H, %C, %S, %N, and %O are content by weight of hydrogen, carbon, sulfur, nitrogen, and O_2 (expressed as percent), respectively, as determined on the same basis as GCV by ultimate analysis of the fuel fired, using ASTM D3178 or D3176 (solid fuels), or computed from results using ASTM D1137, D1945, or D1946 (gaseous fuels) as applicable. (These five methods are incorporated by reference, see § 60.17.)

(ii) GVC is the gross calorific value (kJ/kg, Btu/lb) of the fuel combusted determined by the ASTM test methods D2015 or D5865 for solid fuels and D1826 for gaseous fuels as applicable. (These three methods are incorporated by reference, see § 60.17.)

(iii) For affected facilities which fire both fossil fuels and nonfossil fuels, the F or Fc value shall be subject to the Administrator's approval.

(6) For affected facilities firing combinations of fossil fuels or fossil fuels and wood residue, the F or Fc factors determined by paragraphs (f)(4) or (f)(5) of this section shall be prorated in accordance with the applicable formula as follows:

$$F = \sum_{i=1}^{n} X_i F_i \quad \text{or} \quad F_c = \sum_{i=1}^{n} X_i (F_c)_i$$

Where:

X_i = Fraction of total heat input derived from each type of fuel (e.g. natural gas, bituminous coal, wood residue, etc.);

F_i or $(F_c)_i$ = Applicable F or F_c factor for each fuel type determined in accordance with paragraphs (f)(4) and (f)(5) of this section; and

n = Number of fuels being burned in combination.

(g) Excess emission and monitoring system performance reports shall be submitted to the Administrator semiannually for each six-month period in the calendar year. All semiannual reports shall be postmarked by the 30th day following the end of each six-month period. Each excess emission and MSP report shall include the information required in § 60.7(c). Periods of excess emissions and monitoring systems (MS) downtime that shall be reported are defined as follows:

(1) *Opacity* . Excess emissions are defined as any six-minute period during which the average opacity of emissions exceeds 20 percent opacity, except that one six-minute average per hour of up to 27 percent opacity need not be reported.

(i) For sources subject to the opacity standard of § 60.42(b)(1), excess emissions are defined as any six-minute period during which the average opacity of emissions exceeds 35 percent opacity, except that one six-minute average per hour of up to 42 percent opacity need not be reported.

(ii) For sources subject to the opacity standard of § 60.42(b)(2), excess emissions are defined as any six-minute period during which the average opacity of emissions exceeds 32 percent opacity, except that one six-minute average per hour of up to 39 percent opacity need not be reported.

(2) *Sulfur dioxide.* Excess emissions for affected facilities are defined as:

(i) For affected facilities electing not to comply with § 60.43(d), any three-hour period during which the average emissions (arithmetic average of three contiguous one-hour periods) of SO_2 as measured by a CEMS exceed the applicable standard in § 60.43; or

(ii) For affected facilities electing to comply with § 60.43(d), any 30 operating day period during which the average emissions (arithmetic average of all one-hour periods during the 30 operating days) of SO_2 as measured by a CEMS exceed the applicable standard in § 60.43. Facilities complying with the 30-day SO_2 standard shall use the most current associated SO_2 compliance and monitoring requirements in §§ 60.48Da and 60.49Da of subpart Da of this part or §§ 60.45b and 60.47b of subpart Db of this part, as applicable.

(3) *Nitrogen oxides.* Excess emissions for affected facilities using a CEMS for measuring NO_X are defined as:

(i) For affected facilities electing not to comply with § 60.44(e), any three-hour period during which the average emissions (arithmetic average of three contiguous one-hour periods) exceed the applicable standards in § 60.44; or

(ii) For affected facilities electing to comply with § 60.44(e), any 30 operating day period during which the average emissions (arithmetic average of all one-hour periods during the 30 operating days) of NO_X as measured by a CEMS exceed the applicable standard in § 60.44. Facilities complying with the 30-day NO_X standard shall use the most current associated NO_X compliance and monitoring requirements in §§ 60.48Da and 60.49Da of subpart Da of this part.

(4) *Particulate matter.* Excess emissions for affected facilities using a CEMS for measuring PM are defined as any boiler operating day period during which the average emissions (arithmetic average of all operating one-hour periods) exceed the applicable standards in § 60.42. Affected facilities using PM CEMS must follow the most current applicable compliance and monitoring provisions in §§ 60.48Da and 60.49Da of subpart Da of this part.

(h) The owner or operator of an affected facility subject to the opacity limits in § 60.42 that elects to monitor emissions according to the requirements in § 60.45(b)(7) shall maintain records according to the requirements specified in paragraphs (h)(1) through (3) of this section, as applicable to the visible emissions monitoring method used.

(1) For each performance test conducted using Method 9 of appendix A-4 of this part, the owner or operator shall keep the records including the information specified in paragraphs (h)(1)(i) through (iii) of this section.

(i) Dates and time intervals of all opacity observation periods;

(ii) Name, affiliation, and copy of current visible emission reading certification for each visible emission observer participating in the performance test; and

(iii) Copies of all visible emission observer opacity field data sheets;

(2) For each performance test conducted using Method 22 of appendix A-4 of this part, the owner or operator shall keep the records including the information specified in paragraphs (h)(2)(i) through (iv) of this section.

(i) Dates and time intervals of all visible emissions observation periods;

(ii) Name and affiliation for each visible emission observer participating in the performance test;

(iii) Copies of all visible emission observer opacity field data sheets; and

(iv) Documentation of any adjustments made and the time the adjustments were completed to the affected facility operation by the owner or operator to demonstrate compliance with the applicable monitoring requirements.

(3) For each digital opacity compliance system, the owner or operator shall maintain records and submit reports according to the requirements specified in the site-specific monitoring plan approved by the Administrator.

[60 FR 65415, Dec. 19, 1995, as amended at 74 FR 5077, Jan. 28, 2009; 76 FR 3522, Jan. 20, 2011; 77 FR 9447, Feb. 16, 2012]

§ 60.46 Test methods and procedures.

(a) In conducting the performance tests required in § 60.8, and subsequent performance tests as requested by the EPA Administrator, the owner or operator shall use as reference methods and procedures the test methods in appendix A of this part or other methods and procedures as specified in this section, except as provided in § 60.8(b). Acceptable alternative methods and procedures are given in paragraph (d) of this section.

(b) The owner or operator shall determine compliance with the PM, SO_2 , and NO_X standards in §§ 60.42, 60.43, and 60.44 as follows:

(1) The emission rate (E) of PM, SO_2 , or NO_X shall be computed for each run using the following equation:

$$E = CF_d\left(\frac{20.9}{(20.9 - \%O_2)}\right)$$

Where:

E = Emission rate of pollutant, ng/J (1b/million Btu);

C = Concentration of pollutant, ng/dscm (1b/dscf);

$\%O_2$ = O_2 concentration, percent dry basis; and

F_d = Factor as determined from Method 19 of appendix A of this part.

(2) Method 5 of appendix A of this part shall be used to determine the PM concentration (C) at affected facilities without wet flue-gas-desulfurization (FGD) systems and Method 5B of appendix A of this part shall be used to determine the PM concentration (C) after FGD systems.

(i) The sampling time and sample volume for each run shall be at least 60 minutes and 0.85 dscm (30 dscf). The probe and filter holder heating systems in the sampling train shall be set to provide an average gas temperature of 160±14 °C (320±25 °F).

(ii) The emission rate correction factor, integrated or grab sampling and analysis procedure of Method 3B of appendix A of this part shall be used to determine the O_2 concentration (%O_2). The O_2 sample shall be obtained simultaneously with, and at the same traverse points as, the particulate sample. If the grab sampling procedure is used, the O_2 concentration for the run shall be the arithmetic mean of the sample O_2 concentrations at all traverse points.

(iii) If the particulate run has more than 12 traverse points, the O_2 traverse points may be reduced to 12 provided that Method 1 of appendix A of this part is used to locate the 12 O_2 traverse points.

(3) Method 9 of appendix A of this part and the procedures in § 60.11 shall be used to determine opacity.

(4) Method 6 of appendix A of this part shall be used to determine the SO_2 concentration.

(i) The sampling site shall be the same as that selected for the particulate sample. The sampling location in the duct shall be at the centroid of the cross section or at a point no closer to the walls than 1 m (3.28 ft). The sampling time and sample volume for each sample run shall be at least 20 minutes and 0.020 dscm (0.71 dscf). Two samples shall be taken during a 1-hour period, with each sample taken within a 30-minute interval.

(ii) The emission rate correction factor, integrated sampling and analysis procedure of Method 3B of appendix A of this part shall be used to determine the O_2 concentration (%O_2). The O_2 sample shall be taken simultaneously with, and at the same point as, the SO_2 sample. The SO_2 emission rate shall be computed for each pair of SO_2 and O_2 samples. The SO_2 emission rate (E) for each run shall be the arithmetic mean of the results of the two pairs of samples.

(5) Method 7 of appendix A of this part shall be used to determine the NO_X concentration.

(i) The sampling site and location shall be the same as for the SO_2 sample. Each run shall consist of four grab samples, with each sample taken at about 15-minute intervals.

(ii) For each NO_X sample, the emission rate correction factor, grab sampling and analysis procedure of Method 3B of appendix A of this part shall be used to determine the O_2 concentration (%O_2). The sample shall be taken simultaneously with, and at the same point as, the NO_X sample.

(iii) The NO_X emission rate shall be computed for each pair of NO_X and O_2 samples. The NO_X emission rate (E) for each run shall be the arithmetic mean of the results of the four pairs of samples.

(c) When combinations of fossil fuels or fossil fuel and wood residue are fired, the owner or operator (in order to compute the prorated standard as shown in §§ 60.43(b) and 60.44(b)) shall determine the percentage (w, x, y, or z) of the total heat input derived from each type of fuel as follows:

(1) The heat input rate of each fuel shall be determined by multiplying the gross calorific value of each fuel fired by the rate of each fuel burned.

(2) ASTM Methods D2015, or D5865 (solid fuels), D240 (liquid fuels), or D1826 (gaseous fuels) (all of these methods are incorporated by reference, see § 60.17) shall be used to determine the gross calorific values of the fuels. The method used to determine the calorific value of wood residue must be approved by the Administrator.

(3) Suitable methods shall be used to determine the rate of each fuel burned during each test period, and a material balance over the steam generating system shall be used to confirm the rate.

(d) The owner or operator may use the following as alternatives to the reference methods and procedures in this section or in other sections as specified:

(1) The emission rate (E) of PM, SO_2 and NO_X may be determined by using the Fc factor, provided that the following procedure is used:

(i) The emission rate (E) shall be computed using the following equation:

$$E = CF_c\left(\frac{100}{\%CO_2}\right)$$

Where:

E = Emission rate of pollutant, ng/J (lb/MMBtu);

C = Concentration of pollutant, ng/dscm (lb/dscf);

$\%CO_2$ = CO_2 concentration, percent dry basis; and

F_c = Factor as determined in appropriate sections of Method 19 of appendix A of this part.

(ii) If and only if the average Fc factor in Method 19 of appendix A of this part is used to calculate E and either E is from 0.97 to 1.00 of the emission standard or the relative accuracy of a continuous emission monitoring system is from 17 to 20 percent, then three runs of Method 3B of appendix A of this part shall be used to determine the O_2 and CO_2 concentration according to the procedures in paragraph (b)(2)(ii), (4)(ii), or (5)(ii) of this section. Then if F_o (average of three runs), as calculated from the equation in Method 3B of appendix A of this part, is more than ±3 percent than the average F_o value, as determined from the average values of F_d and F_c in Method 19 of appendix A of this part, *i.e.* , F_{oa} = 0.209 (F_{da} /F_{ca}), then the following procedure shall be followed:

(A) When F_o is less than 0.97 F_{oa} , then E shall be increased by that proportion under 0.97 F_{oa} , *e.g.* , if F_o is 0.95 F_{oa} , E shall be increased by 2 percent. This recalculated value shall be used to determine compliance with the emission standard.

(B) When F_o is less than 0.97 F_{oa} and when the average difference (d) between the continuous monitor minus the reference methods is negative, then E shall be increased by that proportion under 0.97 F_{oa} , *e.g.* , if F_o is 0.95 F_{oa} , E shall be increased by 2 percent. This recalculated value shall be used to determine compliance with the relative accuracy specification.

(C) When F_o is greater than 1.03 F_{oa} and when the average difference d is positive, then E shall be decreased by that proportion over 1.03 F_{oa} , *e.g.* , if F_o is 1.05 F_{oa} , E shall be decreased by 2 percent. This recalculated value shall be used to determine compliance with the relative accuracy specification.

(2) For Method 5 or 5B of appendix A-3 of this part, Method 17 of appendix A-6 of this part may be used at facilities with or without wet FGD systems if the stack gas temperature at the sampling location does not exceed an average temperature of 160 °C (320 °F). The procedures of sections 8.1 and 11.1 of Method 5B of appendix A-3 of this part may be used with Method 17 of appendix A-6 of this part only if it is used after wet FGD systems. Method 17 of appendix A-6 of this part shall not be used after wet FGD systems if the effluent gas is saturated or laden with water droplets.

(3) Particulate matter and SO_2 may be determined simultaneously with the Method 5 of appendix A of this part train provided that the following changes are made:

(i) The filter and impinger apparatus in sections 2.1.5 and 2.1.6 of Method 8 of appendix A of this part is used in place of the condenser (section 2.1.7) of Method 5 of appendix A of this part.

(ii) All applicable procedures in Method 8 of appendix A of this part for the determination of SO_2 (including moisture) are used:

(4) For Method 6 of appendix A of this part, Method 6C of appendix A of this part may be used. Method 6A of appendix A of this part may also be used whenever Methods 6 and 3B of appendix A of this part data are specified to determine the SO_2 emission rate, under the conditions in paragraph (d)(1) of this section.

(5) For Method 7 of appendix A of this part, Method 7A, 7C, 7D, or 7E of appendix A of this part may be used. If Method 7C, 7D, or 7E of appendix A of this part is used, the sampling time for each run shall be at least 1 hour and the integrated sampling approach shall be used to determine the O_2 concentration ($\%O_2$) for the emission rate correction factor.

(6) For Method 3 of appendix A of this part, Method 3A or 3B of appendix A of this part may be used.

(7) For Method 3B of appendix A of this part, Method 3A of appendix A of this part may be used.

[60 FR 65415, Dec. 19, 1995, as amended at 74 FR 5078, Jan. 28, 2009]

Attachment E
To Part 70 Operating Permit Renewal No. T089-29907-00121

[Downloaded from the eCFR on May 21, 2013]

Electronic Code of Federal Regulations

Title 40: Protection of Environment

40 CFR 60, Subpart Db—Standards of Performance for Industrial-Commercial-Institutional Steam Generating Units

Source: 72 FR 32742, June 13, 2007, unless otherwise noted.

§ 60.40b Applicability and delegation of authority.

(a) The affected facility to which this subpart applies is each steam generating unit that commences construction, modification, or reconstruction after June 19, 1984, and that has a heat input capacity from fuels combusted in the steam generating unit of greater than 29 megawatts (MW) (100 million British thermal units per hour (MMBtu/hr)).

(b) Any affected facility meeting the applicability requirements under paragraph (a) of this section and commencing construction, modification, or reconstruction after June 19, 1984, but on or before June 19, 1986, is subject to the following standards:

(1) Coal-fired affected facilities having a heat input capacity between 29 and 73 MW (100 and 250 MMBtu/hr), inclusive, are subject to the particulate matter (PM) and nitrogen oxides (NO_X) standards under this subpart.

(2) Coal-fired affected facilities having a heat input capacity greater than 73 MW (250 MMBtu/hr) and meeting the applicability requirements under subpart D (Standards of performance for fossil-fuel-fired steam generators; § 60.40) are subject to the PM and NO_X standards under this subpart and to the sulfur dioxide (SO_2) standards under subpart D (§ 60.43).

(3) Oil-fired affected facilities having a heat input capacity between 29 and 73 MW (100 and 250 MMBtu/hr), inclusive, are subject to the NO_X standards under this subpart.

(4) Oil-fired affected facilities having a heat input capacity greater than 73 MW (250 MMBtu/hr) and meeting the applicability requirements under subpart D (Standards of performance for fossil-fuel-fired steam generators; § 60.40) are also subject to the NO_X standards under this subpart and the PM and SO_2 standards under subpart D (§ 60.42 and § 60.43).

(c) Affected facilities that also meet the applicability requirements under subpart J or subpart Ja of this part are subject to the PM and NO_X standards under this subpart and the SO_2 standards under subpart J or subpart Ja of this part, as applicable.

(d) Affected facilities that also meet the applicability requirements under subpart E (Standards of performance for incinerators; § 60.50) are subject to the NO_X and PM standards under this subpart.

(e) Steam generating units meeting the applicability requirements under subpart Da (Standards of performance for electric utility steam generating units; § 60.40Da) are not subject to this subpart.

(f) Any change to an existing steam generating unit for the sole purpose of combusting gases containing total reduced sulfur (TRS) as defined under § 60.281 is not considered a modification under § 60.14 and the steam generating unit is not subject to this subpart.

(g) In delegating implementation and enforcement authority to a State under section 111(c) of the Clean Air Act, the following authorities shall be retained by the Administrator and not transferred to a State.

(1) Section 60.44b(f).

(2) Section 60.44b(g).

(3) Section 60.49b(a)(4).

(h) Any affected facility that meets the applicability requirements and is subject to subpart Ea, subpart Eb, subpart AAAA, or subpart CCCC of this part is not subject to this subpart.

(i) Affected facilities (*i.e.,* heat recovery steam generators) that are associated with stationary combustion turbines and that meet the applicability requirements of subpart KKKK of this part are not subject to this subpart. This subpart will continue to apply to all other affected facilities (*i.e.* heat recovery steam generators with duct burners) that are capable of combusting more than 29 MW (100 MMBtu/h) heat input of fossil fuel. If the affected facility (*i.e.* heat recovery steam generator) is subject to this subpart, only emissions resulting from combustion of fuels in the steam generating unit are subject to this subpart. (The stationary combustion turbine emissions are subject to subpart GG or KKKK, as applicable, of this part.)

(j) Any affected facility meeting the applicability requirements under paragraph (a) of this section and commencing construction, modification, or reconstruction after June 19, 1986 is not subject to subpart D (Standards of Performance for Fossil-Fuel-Fired Steam Generators, § 60.40).

(k) Any affected facility that meets the applicability requirements and is subject to an EPA approved State or Federal section 111(d)/129 plan implementing subpart Cb or subpart BBBB of this part is not covered by this subpart.

(l) Affected facilities that also meet the applicability requirements under subpart BB of this part (Standards of Performance for Kraft Pulp Mills) are subject to the SO_2 and NO_X standards under this subpart and the PM standards under subpart BB.

(m) Temporary boilers are not subject to this subpart.

[72 FR 32742, June 13, 2007, as amended at 74 FR 5084, Jan. 28, 2009; 77 FR 9459, Feb. 16, 2012]

§ 60.41b Definitions.

As used in this subpart, all terms not defined herein shall have the meaning given them in the Clean Air Act and in subpart A of this part.

Annual capacity factor means the ratio between the actual heat input to a steam generating unit from the fuels listed in § 60.42b(a), § 60.43b(a), or § 60.44b(a), as applicable, during a calendar year and the potential heat input to the steam generating unit had it been operated for 8,760 hours during a calendar year at the maximum steady state design heat input capacity. In the case of steam generating units that are rented or leased, the actual heat input shall be determined based on the combined heat input from all operations of the affected facility in a calendar year.

Byproduct/waste means any liquid or gaseous substance produced at chemical manufacturing plants, petroleum refineries, or pulp and paper mills (except natural gas, distillate oil, or residual oil) and combusted in a steam generating unit for heat recovery or for disposal. Gaseous substances with carbon dioxide (CO_2) levels greater than 50 percent or carbon monoxide levels greater than 10 percent are not byproduct/waste for the purpose of this subpart.

Chemical manufacturing plants mean industrial plants that are classified by the Department of Commerce under Standard Industrial Classification (SIC) Code 28.

Coal means all solid fuels classified as anthracite, bituminous, subbituminous, or lignite by the American Society of Testing and Materials in ASTM D388 (incorporated by reference, see § 60.17), coal refuse, and petroleum coke. Coal-derived synthetic fuels, including but not limited to solvent refined coal, gasified coal not meeting the definition of natural gas, coal-oil mixtures, coke oven gas, and coal-water mixtures, are also included in this definition for the purposes of this subpart.

Coal refuse means any byproduct of coal mining or coal cleaning operations with an ash content greater than 50 percent, by weight, and a heating value less than 13,900 kJ/kg (6,000 Btu/lb) on a dry basis.

Cogeneration , also known as combined heat and power, means a facility that simultaneously produces both electric (or mechanical) and useful thermal energy from the same primary energy source.

Coke oven gas means the volatile constituents generated in the gaseous exhaust during the carbonization of bituminous coal to form coke.

Combined cycle system means a system in which a separate source, such as a gas turbine, internal combustion engine, kiln, etc., provides exhaust gas to a steam generating unit.

Conventional technology means wet flue gas desulfurization (FGD) technology, dry FGD technology, atmospheric fluidized bed combustion technology, and oil hydrodesulfurization technology.

Distillate oil means fuel oils that contain 0.05 weight percent nitrogen or less and comply with the specifications for fuel oil numbers 1 and 2, as defined by the American Society of Testing and Materials in ASTM D396 (incorporated by reference, see § 60.17), diesel fuel oil numbers 1 and 2, as defined by the American Society for Testing and Materials in ASTM D975 (incorporated by reference, see § 60.17), kerosine, as defined by the American Society of Testing and Materials in ASTM D3699 (incorporated by reference, see § 60.17), biodiesel as defined by the American Society of Testing and Materials in ASTM D6751 (incorporated by reference, see § 60.17), or biodiesel blends as defined by the American Society of Testing and Materials in ASTM D7467 (incorporated by reference, see § 60.17).

Dry flue gas desulfurization technology means a SO_2 control system that is located downstream of the steam generating unit and removes sulfur oxides from the combustion gases of the steam generating unit by contacting the combustion gases with an alkaline reagent and water, whether introduced separately or as a premixed slurry or solution and forming a dry powder material. This definition includes devices where the dry powder material is subsequently converted to another form. Alkaline slurries or solutions used in dry flue gas desulfurization technology include but are not limited to lime and sodium.

Duct burner means a device that combusts fuel and that is placed in the exhaust duct from another source, such as a stationary gas turbine, internal combustion engine, kiln, etc., to allow the firing of additional fuel to heat the exhaust gases before the exhaust gases enter a steam generating unit.

Emerging technology means any SO_2 control system that is not defined as a conventional technology under this section, and for which the owner or operator of the facility has applied to the Administrator and received approval to operate as an emerging technology under § 60.49b(a)(4).

Federally enforceable means all limitations and conditions that are enforceable by the Administrator, including the requirements of 40 CFR parts 60 and 61, requirements within any applicable State Implementation Plan, and any permit requirements established under 40 CFR 52.21 or under 40 CFR 51.18 and 51.24.

Fluidized bed combustion technology means combustion of fuel in a bed or series of beds (including but not limited to bubbling bed units and circulating bed units) of limestone aggregate (or other sorbent materials) in which these materials are forced upward by the flow of combustion air and the gaseous products of combustion.

Fuel pretreatment means a process that removes a portion of the sulfur in a fuel before combustion of the fuel in a steam generating unit.

Full capacity means operation of the steam generating unit at 90 percent or more of the maximum steady-state design heat input capacity.

Gaseous fuel means any fuel that is a gas at ISO conditions. This includes, but is not limited to, natural gas and gasified coal (including coke oven gas).

Gross output means the gross useful work performed by the steam generated. For units generating only electricity, the gross useful work performed is the gross electrical output from the turbine/generator set. For cogeneration units,

the gross useful work performed is the gross electrical or mechanical output plus 75 percent of the useful thermal output measured relative to ISO conditions that is not used to generate additional electrical or mechanical output or to enhance the performance of the unit (*i.e.* , steam delivered to an industrial process).

Heat input means heat derived from combustion of fuel in a steam generating unit and does not include the heat derived from preheated combustion air, recirculated flue gases, or exhaust gases from other sources, such as gas turbines, internal combustion engines, kilns, etc.

Heat release rate means the steam generating unit design heat input capacity (in MW or Btu/hr) divided by the furnace volume (in cubic meters or cubic feet); the furnace volume is that volume bounded by the front furnace wall where the burner is located, the furnace side waterwall, and extending to the level just below or in front of the first row of convection pass tubes.

Heat transfer medium means any material that is used to transfer heat from one point to another point.

High heat release rate means a heat release rate greater than 730,000 J/sec-m^3 (70,000 Btu/hr-ft^3).

ISO Conditions means a temperature of 288 Kelvin, a relative humidity of 60 percent, and a pressure of 101.3 kilopascals.

Lignite means a type of coal classified as lignite A or lignite B by the American Society of Testing and Materials in ASTM D388 (incorporated by reference, see § 60.17).

Low heat release rate means a heat release rate of 730,000 J/sec-m^3 (70,000 Btu/hr-ft^3) or less.

Mass-feed stoker steam generating unit means a steam generating unit where solid fuel is introduced directly into a retort or is fed directly onto a grate where it is combusted.

Maximum heat input capacity means the ability of a steam generating unit to combust a stated maximum amount of fuel on a steady state basis, as determined by the physical design and characteristics of the steam generating unit.

Municipal-type solid waste means refuse, more than 50 percent of which is waste consisting of a mixture of paper, wood, yard wastes, food wastes, plastics, leather, rubber, and other combustible materials, and noncombustible materials such as glass and rock.

Natural gas means:

(1) A naturally occurring mixture of hydrocarbon and nonhydrocarbon gases found in geologic formations beneath the earth's surface, of which the principal constituent is methane; or

(2) Liquefied petroleum gas, as defined by the American Society for Testing and Materials in ASTM D1835 (incorporated by reference, see § 60.17); or

(3) A mixture of hydrocarbons that maintains a gaseous state at ISO conditions. Additionally, natural gas must either be composed of at least 70 percent methane by volume or have a gross calorific value between 34 and 43 megajoules (MJ) per dry standard cubic meter (910 and 1,150 Btu per dry standard cubic foot).

Noncontinental area means the State of Hawaii, the Virgin Islands, Guam, American Samoa, the Commonwealth of Puerto Rico, or the Northern Mariana Islands.

Oil means crude oil or petroleum or a liquid fuel derived from crude oil or petroleum, including distillate and residual oil.

Petroleum refinery means industrial plants as classified by the Department of Commerce under Standard Industrial Classification (SIC) Code 29.

Potential sulfur dioxide emission rate means the theoretical SO_2 emissions (nanograms per joule (ng/J) or lb/MMBtu heat input) that would result from combusting fuel in an uncleaned state and without using emission control systems. For gasified coal or oil that is desulfurized prior to combustion, the *Potential sulfur dioxide emission rate* is the theoretical SO_2 emissions (ng/J or lb/MMBtu heat input) that would result from combusting fuel in a cleaned state without using any post combustion emission control systems.

Process heater means a device that is primarily used to heat a material to initiate or promote a chemical reaction in which the material participates as a reactant or catalyst.

Pulp and paper mills means industrial plants that are classified by the Department of Commerce under North American Industry Classification System (NAICS) Code 322 or Standard Industrial Classification (SIC) Code 26.

Pulverized coal-fired steam generating unit means a steam generating unit in which pulverized coal is introduced into an air stream that carries the coal to the combustion chamber of the steam generating unit where it is fired in suspension. This includes both conventional pulverized coal-fired and micropulverized coal-fired steam generating units. Residual oil means crude oil, fuel oil numbers 1 and 2 that have a nitrogen content greater than 0.05 weight percent, and all fuel oil numbers 4, 5 and 6, as defined by the American Society of Testing and Materials in ASTM D396 (incorporated by reference, see § 60.17).

Spreader stoker steam generating unit means a steam generating unit in which solid fuel is introduced to the combustion zone by a mechanism that throws the fuel onto a grate from above. Combustion takes place both in suspension and on the grate.

Steam generating unit means a device that combusts any fuel or byproduct/waste and produces steam or heats water or heats any heat transfer medium. This term includes any municipal-type solid waste incinerator with a heat recovery steam generating unit or any steam generating unit that combusts fuel and is part of a cogeneration system or a combined cycle system. This term does not include process heaters as they are defined in this subpart.

Steam generating unit operating day means a 24-hour period between 12:00 midnight and the following midnight during which any fuel is combusted at any time in the steam generating unit. It is not necessary for fuel to be combusted continuously for the entire 24-hour period.

Temporary boiler means any gaseous or liquid fuel-fired steam generating unit that is designed to, and is capable of, being carried or moved from one location to another by means of, for example, wheels, skids, carrying handles, dollies, trailers, or platforms. A steam generating unit is not a temporary boiler if any one of the following conditions exists:

(1) The equipment is attached to a foundation.

(2) The steam generating unit or a replacement remains at a location for more than 180 consecutive days. Any temporary boiler that replaces a temporary boiler at a location and performs the same or similar function will be included in calculating the consecutive time period.

(3) The equipment is located at a seasonal facility and operates during the full annual operating period of the seasonal facility, remains at the facility for at least 2 years, and operates at that facility for at least 3 months each year.

(4) The equipment is moved from one location to another in an attempt to circumvent the residence time requirements of this definition.

Very low sulfur oil means for units constructed, reconstructed, or modified on or before February 28, 2005, oil that contains no more than 0.5 weight percent sulfur or that, when combusted without SO_2 emission control, has a SO_2 emission rate equal to or less than 215 ng/J (0.5 lb/MMBtu) heat input. For units constructed, reconstructed, or modified after February 28, 2005 and not located in a noncontinental area, *very low sulfur oil* means oil that contains no more than 0.30 weight percent sulfur or that, when combusted without SO_2 emission control, has a SO_2 emission rate equal to or less than 140 ng/J (0.32 lb/MMBtu) heat input. For units constructed, reconstructed, or modified after February 28, 2005 and located in a noncontinental area, *very low sulfur oil* means oil that contains no more than 0.5

weight percent sulfur or that, when combusted without SO_2 emission control, has a SO_2 emission rate equal to or less than 215 ng/J (0.50 lb/MMBtu) heat input.

Wet flue gas desulfurization technology means a SO_2 control system that is located downstream of the steam generating unit and removes sulfur oxides from the combustion gases of the steam generating unit by contacting the combustion gas with an alkaline slurry or solution and forming a liquid material. This definition applies to devices where the aqueous liquid material product of this contact is subsequently converted to other forms. Alkaline reagents used in wet flue gas desulfurization technology include, but are not limited to, lime, limestone, and sodium.

Wet scrubber system means any emission control device that mixes an aqueous stream or slurry with the exhaust gases from a steam generating unit to control emissions of PM or SO_2 .

Wood means wood, wood residue, bark, or any derivative fuel or residue thereof, in any form, including, but not limited to, sawdust, sanderdust, wood chips, scraps, slabs, millings, shavings, and processed pellets made from wood or other forest residues.

[72 FR 32742, June 13, 2007, as amended at 74 FR 5084, Jan. 28, 2009; 77 FR 9459, Feb. 16, 2012]

§ 60.42b Standard for sulfur dioxide (SO2).

(a) Except as provided in paragraphs (b), (c), (d), or (j) of this section, on and after the date on which the performance test is completed or required to be completed under § 60.8, whichever comes first, no owner or operator of an affected facility that commenced construction, reconstruction, or modification on or before February 28, 2005, that combusts coal or oil shall cause to be discharged into the atmosphere any gases that contain SO_2 in excess of 87 ng/J (0.20 lb/MMBtu) or 10 percent (0.10) of the potential SO_2 emission rate (90 percent reduction) and the emission limit determined according to the following formula:

$$E_s = \frac{(K_a H_a + K_b H_b)}{(H_a + H_b)}$$

Where:

E_s = SO_2 emission limit, in ng/J or lb/MMBtu heat input;

K_a = 520 ng/J (or 1.2 lb/MMBtu);

K_b = 340 ng/J (or 0.80 lb/MMBtu);

H_a = Heat input from the combustion of coal, in J (MMBtu); and

H_b = Heat input from the combustion of oil, in J (MMBtu).

For facilities complying with the percent reduction standard, only the heat input supplied to the affected facility from the combustion of coal and oil is counted in this paragraph. No credit is provided for the heat input to the affected facility from the combustion of natural gas, wood, municipal-type solid waste, or other fuels or heat derived from exhaust gases from other sources, such as gas turbines, internal combustion engines, kilns, etc.

(b) On and after the date on which the performance test is completed or required to be completed under § 60.8, whichever date comes first, no owner or operator of an affected facility that commenced construction, reconstruction, or modification on or before February 28, 2005, that combusts coal refuse alone in a fluidized bed combustion steam generating unit shall cause to be discharged into the atmosphere any gases that contain SO_2 in excess of 87 ng/J (0.20 lb/MMBtu) or 20 percent (0.20) of the potential SO_2 emission rate (80 percent reduction) and 520 ng/J (1.2 lb/MMBtu) heat input. If coal or oil is fired with coal refuse, the affected facility is subject to paragraph (a) or (d) of this section, as applicable. For facilities complying with the percent reduction standard, only the heat input supplied to the affected facility from the combustion of coal and oil is counted in this paragraph. No credit is provided for the heat

input to the affected facility from the combustion of natural gas, wood, municipal-type solid waste, or other fuels or heat derived from exhaust gases from other sources, such as gas turbines, internal combustion engines, kilns, etc.

(c) On and after the date on which the performance test is completed or is required to be completed under § 60.8, whichever comes first, no owner or operator of an affected facility that combusts coal or oil, either alone or in combination with any other fuel, and that uses an emerging technology for the control of SO_2 emissions, shall cause to be discharged into the atmosphere any gases that contain SO_2 in excess of 50 percent of the potential SO_2 emission rate (50 percent reduction) and that contain SO_2 in excess of the emission limit determined according to the following formula:

$$E_s = \frac{(K_c H_c + K_d H_d)}{(H_c + H_d)}$$

Where:

E_s = SO2 emission limit, in ng/J or lb/MM Btu heat input;

K_c = 260 ng/J (or 0.60 lb/MMBtu);

K_d = 170 ng/J (or 0.40 lb/MMBtu);

H_c = Heat input from the combustion of coal, in J (MMBtu); and

H_d = Heat input from the combustion of oil, in J (MMBtu).

For facilities complying with the percent reduction standard, only the heat input supplied to the affected facility from the combustion of coal and oil is counted in this paragraph. No credit is provided for the heat input to the affected facility from the combustion of natural gas, wood, municipal-type solid waste, or other fuels, or from the heat input derived from exhaust gases from other sources, such as gas turbines, internal combustion engines, kilns, etc.

(d) On and after the date on which the performance test is completed or required to be completed under § 60.8, whichever comes first, no owner or operator of an affected facility that commenced construction, reconstruction, or modification on or before February 28, 2005 and listed in paragraphs (d)(1), (2), (3), or (4) of this section shall cause to be discharged into the atmosphere any gases that contain SO_2 in excess of 520 ng/J (1.2 lb/MMBtu) heat input if the affected facility combusts coal, or 215 ng/J (0.5 lb/MMBtu) heat input if the affected facility combusts oil other than very low sulfur oil. Percent reduction requirements are not applicable to affected facilities under paragraphs (d)(1), (2), (3) or (4) of this section. For facilities complying with paragraphs (d)(1), (2), or (3) of this section, only the heat input supplied to the affected facility from the combustion of coal and oil is counted in this paragraph. No credit is provided for the heat input to the affected facility from the combustion of natural gas, wood, municipal-type solid waste, or other fuels or heat derived from exhaust gases from other sources, such as gas turbines, internal combustion engines, kilns, etc.

(1) Affected facilities that have an annual capacity factor for coal and oil of 30 percent (0.30) or less and are subject to a federally enforceable permit limiting the operation of the affected facility to an annual capacity factor for coal and oil of 30 percent (0.30) or less;

(2) Affected facilities located in a noncontinental area; or

(3) Affected facilities combusting coal or oil, alone or in combination with any fuel, in a duct burner as part of a combined cycle system where 30 percent (0.30) or less of the heat entering the steam generating unit is from combustion of coal and oil in the duct burner and 70 percent (0.70) or more of the heat entering the steam generating unit is from the exhaust gases entering the duct burner; or

(4) The affected facility burns coke oven gas alone or in combination with natural gas or very low sulfur distillate oil.

(e) Except as provided in paragraph (f) of this section, compliance with the emission limits, fuel oil sulfur limits, and/or percent reduction requirements under this section are determined on a 30-day rolling average basis.

(f) Except as provided in paragraph (j)(2) of this section, compliance with the emission limits or fuel oil sulfur limits under this section is determined on a 24-hour average basis for affected facilities that (1) have a federally enforceable permit limiting the annual capacity factor for oil to 10 percent or less, (2) combust only very low sulfur oil, and (3) do not combust any other fuel.

(g) Except as provided in paragraph (i) of this section and § 60.45b(a), the SO_2 emission limits and percent reduction requirements under this section apply at all times, including periods of startup, shutdown, and malfunction.

(h) Reductions in the potential SO_2 emission rate through fuel pretreatment are not credited toward the percent reduction requirement under paragraph (c) of this section unless:

(1) Fuel pretreatment results in a 50 percent or greater reduction in potential SO_2 emissions and

(2) Emissions from the pretreated fuel (without combustion or post-combustion SO_2 control) are equal to or less than the emission limits specified in paragraph (c) of this section.

(i) An affected facility subject to paragraph (a), (b), or (c) of this section may combust very low sulfur oil or natural gas when the SO_2 control system is not being operated because of malfunction or maintenance of the SO_2 control system.

(j) Percent reduction requirements are not applicable to affected facilities combusting only very low sulfur oil. The owner or operator of an affected facility combusting very low sulfur oil shall demonstrate that the oil meets the definition of very low sulfur oil by: (1) Following the performance testing procedures as described in § 60.45b(c) or § 60.45b(d), and following the monitoring procedures as described in § 60.47b(a) or § 60.47b(b) to determine SO_2 emission rate or fuel oil sulfur content; or (2) maintaining fuel records as described in § 60.49b(r).

(k)(1) Except as provided in paragraphs (k)(2), (k)(3), and (k)(4) of this section, on and after the date on which the initial performance test is completed or is required to be completed under § 60.8, whichever date comes first, no owner or operator of an affected facility that commences construction, reconstruction, or modification after February 28, 2005, and that combusts coal, oil, natural gas, a mixture of these fuels, or a mixture of these fuels with any other fuels shall cause to be discharged into the atmosphere any gases that contain SO_2 in excess of 87 ng/J (0.20 lb/MMBtu) heat input or 8 percent (0.08) of the potential SO_2 emission rate (92 percent reduction) and 520 ng/J (1.2 lb/MMBtu) heat input. For facilities complying with the percent reduction standard and paragraph (k)(3) of this section, only the heat input supplied to the affected facility from the combustion of coal and oil is counted in paragraph (k) of this section. No credit is provided for the heat input to the affected facility from the combustion of natural gas, wood, municipal-type solid waste, or other fuels or heat derived from exhaust gases from other sources, such as gas turbines, internal combustion engines, kilns, etc.

(2) Units firing only very low sulfur oil, gaseous fuel, a mixture of these fuels, or a mixture of these fuels with any other fuels with a potential SO_2 emission rate of 140 ng/J (0.32 lb/MMBtu) heat input or less are exempt from the SO_2 emissions limit in paragraph (k)(1) of this section.

(3) Units that are located in a noncontinental area and that combust coal, oil, or natural gas shall not discharge any gases that contain SO_2 in excess of 520 ng/J (1.2 lb/MMBtu) heat input if the affected facility combusts coal, or 215 ng/J (0.50 lb/MMBtu) heat input if the affected facility combusts oil or natural gas.

(4) As an alternative to meeting the requirements under paragraph (k)(1) of this section, modified facilities that combust coal or a mixture of coal with other fuels shall not cause to be discharged into the atmosphere any gases that contain SO_2 in excess of 87 ng/J (0.20 lb/MMBtu) heat input or 10 percent (0.10) of the potential SO_2 emission rate (90 percent reduction) and 520 ng/J (1.2 lb/MMBtu) heat input.

[72 FR 32742, June 13, 2007, as amended at 74 FR 5084, Jan. 28, 2009; 76 FR 3523, Jan. 20, 2011]

§ 60.43b Standard for particulate matter (PM).

(a) On and after the date on which the initial performance test is completed or is required to be completed under § 60.8, whichever comes first, no owner or operator of an affected facility that commenced construction, reconstruction, or modification on or before February 28, 2005 that combusts coal or combusts mixtures of coal with other fuels, shall cause to be discharged into the atmosphere from that affected facility any gases that contain PM in excess of the following emission limits:

(1) 22 ng/J (0.051 lb/MMBtu) heat input, (i) If the affected facility combusts only coal, or

(ii) If the affected facility combusts coal and other fuels and has an annual capacity factor for the other fuels of 10 percent (0.10) or less.

(2) 43 ng/J (0.10 lb/MMBtu) heat input if the affected facility combusts coal and other fuels and has an annual capacity factor for the other fuels greater than 10 percent (0.10) and is subject to a federally enforceable requirement limiting operation of the affected facility to an annual capacity factor greater than 10 percent (0.10) for fuels other than coal.

(3) 86 ng/J (0.20 lb/MMBtu) heat input if the affected facility combusts coal or coal and other fuels and

(i) Has an annual capacity factor for coal or coal and other fuels of 30 percent (0.30) or less,

(ii) Has a maximum heat input capacity of 73 MW (250 MMBtu/hr) or less,

(iii) Has a federally enforceable requirement limiting operation of the affected facility to an annual capacity factor of 30 percent (0.30) or less for coal or coal and other solid fuels, and

(iv) Construction of the affected facility commenced after June 19, 1984, and before November 25, 1986.

(4) An affected facility burning coke oven gas alone or in combination with other fuels not subject to a PM standard under § 60.43b and not using a post-combustion technology (except a wet scrubber) for reducing PM or SO_2 emissions is not subject to the PM limits under § 60.43b(a).

(b) On and after the date on which the performance test is completed or required to be completed under § 60.8, whichever comes first, no owner or operator of an affected facility that commenced construction, reconstruction, or modification on or before February 28, 2005, and that combusts oil (or mixtures of oil with other fuels) and uses a conventional or emerging technology to reduce SO_2 emissions shall cause to be discharged into the atmosphere from that affected facility any gases that contain PM in excess of 43 ng/J (0.10 lb/MMBtu) heat input.

(c) On and after the date on which the initial performance test is completed or is required to be completed under § 60.8, whichever comes first, no owner or operator of an affected facility that commenced construction, reconstruction, or modification on or before February 28, 2005, and that combusts wood, or wood with other fuels, except coal, shall cause to be discharged from that affected facility any gases that contain PM in excess of the following emission limits:

(1) 43 ng/J (0.10 lb/MMBtu) heat input if the affected facility has an annual capacity factor greater than 30 percent (0.30) for wood.

(2) 86 ng/J (0.20 lb/MMBtu) heat input if (i) The affected facility has an annual capacity factor of 30 percent (0.30) or less for wood;

(ii) Is subject to a federally enforceable requirement limiting operation of the affected facility to an annual capacity factor of 30 percent (0.30) or less for wood; and

(iii) Has a maximum heat input capacity of 73 MW (250 MMBtu/hr) or less.

(d) On and after the date on which the initial performance test is completed or is required to be completed under § 60.8, whichever date comes first, no owner or operator of an affected facility that combusts municipal-type solid waste or mixtures of municipal-type solid waste with other fuels, shall cause to be discharged into the atmosphere from that affected facility any gases that contain PM in excess of the following emission limits:

(1) 43 ng/J (0.10 lb/MMBtu) heat input;

(i) If the affected facility combusts only municipal-type solid waste; or

(ii) If the affected facility combusts municipal-type solid waste and other fuels and has an annual capacity factor for the other fuels of 10 percent (0.10) or less.

(2) 86 ng/J (0.20 lb/MMBtu) heat input if the affected facility combusts municipal-type solid waste or municipal-type solid waste and other fuels; and

(i) Has an annual capacity factor for municipal-type solid waste and other fuels of 30 percent (0.30) or less;

(ii) Has a maximum heat input capacity of 73 MW (250 MMBtu/hr) or less;

(iii) Has a federally enforceable requirement limiting operation of the affected facility to an annual capacity factor of 30 percent (0.30) or less for municipal-type solid waste, or municipal-type solid waste and other fuels; and

(iv) Construction of the affected facility commenced after June 19, 1984, but on or before November 25, 1986.

(e) For the purposes of this section, the annual capacity factor is determined by dividing the actual heat input to the steam generating unit during the calendar year from the combustion of coal, wood, or municipal-type solid waste, and other fuels, as applicable, by the potential heat input to the steam generating unit if the steam generating unit had been operated for 8,760 hours at the maximum heat input capacity.

(f) On and after the date on which the initial performance test is completed or is required to be completed under § 60.8, whichever date comes first, no owner or operator of an affected facility that combusts coal, oil, wood, or mixtures of these fuels with any other fuels shall cause to be discharged into the atmosphere any gases that exhibit greater than 20 percent opacity (6-minute average), except for one 6-minute period per hour of not more than 27 percent opacity. An owner or operator of an affected facility that elects to install, calibrate, maintain, and operate a continuous emissions monitoring system (CEMS) for measuring PM emissions according to the requirements of this subpart and is subject to a federally enforceable PM limit of 0.030 lb/MMBtu or less is exempt from the opacity standard specified in this paragraph.

(g) The PM and opacity standards apply at all times, except during periods of startup, shutdown, or malfunction.

(h)(1) Except as provided in paragraphs (h)(2), (h)(3), (h)(4), (h)(5), and (h)(6) of this section, on and after the date on which the initial performance test is completed or is required to be completed under § 60.8, whichever date comes first, no owner or operator of an affected facility that commenced construction, reconstruction, or modification after February 28, 2005, and that combusts coal, oil, wood, a mixture of these fuels, or a mixture of these fuels with any other fuels shall cause to be discharged into the atmosphere from that affected facility any gases that contain PM in excess of 13 ng/J (0.030 lb/MMBtu) heat input,

(2) As an alternative to meeting the requirements of paragraph (h)(1) of this section, the owner or operator of an affected facility for which modification commenced after February 28, 2005, may elect to meet the requirements of this paragraph. On and after the date on which the initial performance test is completed or required to be completed under § 60.8, no owner or operator of an affected facility that commences modification after February 28, 2005 shall cause to be discharged into the atmosphere from that affected facility any gases that contain PM in excess of both:

(i) 22 ng/J (0.051 lb/MMBtu) heat input derived from the combustion of coal, oil, wood, a mixture of these fuels, or a mixture of these fuels with any other fuels; and

(ii) 0.2 percent of the combustion concentration (99.8 percent reduction) when combusting coal, oil, wood, a mixture of these fuels, or a mixture of these fuels with any other fuels.

(3) On and after the date on which the initial performance test is completed or is required to be completed under § 60.8, whichever date comes first, no owner or operator of an affected facility that commences modification after February 28, 2005, and that combusts over 30 percent wood (by heat input) on an annual basis and has a maximum heat input capacity of 73 MW (250 MMBtu/h) or less shall cause to be discharged into the atmosphere from that affected facility any gases that contain PM in excess of 43 ng/J (0.10 lb/MMBtu) heat input.

(4) On and after the date on which the initial performance test is completed or is required to be completed under § 60.8, whichever date comes first, no owner or operator of an affected facility that commences modification after February 28, 2005, and that combusts over 30 percent wood (by heat input) on an annual basis and has a maximum heat input capacity greater than 73 MW (250 MMBtu/h) shall cause to be discharged into the atmosphere from that affected facility any gases that contain PM in excess of 37 ng/J (0.085 lb/MMBtu) heat input.

(5) On and after the date on which the initial performance test is completed or is required to be completed under § 60.8, whichever date comes first, an owner or operator of an affected facility not located in a noncontinental area that commences construction, reconstruction, or modification after February 28, 2005, and that combusts only oil that contains no more than 0.30 weight percent sulfur, coke oven gas, a mixture of these fuels, or either fuel (or a mixture of these fuels) in combination with other fuels not subject to a PM standard in § 60.43b and not using a post-combustion technology (except a wet scrubber) to reduce SO_2 or PM emissions is not subject to the PM limits in (h)(1) of this section.

(6) On and after the date on which the initial performance test is completed or is required to be completed under § 60.8, whichever date comes first, an owner or operator of an affected facility located in a noncontinental area that commences construction, reconstruction, or modification after February 28, 2005, and that combusts only oil that contains no more than 0.5 weight percent sulfur, coke oven gas, a mixture of these fuels, or either fuel (or a mixture of these fuels) in combination with other fuels not subject to a PM standard in § 60.43b and not using a post-combustion technology (except a wet scrubber) to reduce SO_2 or PM emissions is not subject to the PM limits in (h)(1) of this section.

[72 FR 32742, June 13, 2007, as amended at 74 FR 5084, Jan. 28, 2009; 77 FR 9459, Feb. 16, 2012]

§ 60.44b Standard for nitrogen oxides (NOX).

(a) Except as provided under paragraphs (k) and (l) of this section, on and after the date on which the initial performance test is completed or is required to be completed under § 60.8, whichever date comes first, no owner or operator of an affected facility that is subject to the provisions of this section and that combusts only coal, oil, or natural gas shall cause to be discharged into the atmosphere from that affected facility any gases that contain NO_X (expressed as NO_2) in excess of the following emission limits:

Fuel/steam generating unit type	Nitrogen oxide emission limits (expressed as NO_2) heat input	
	ng/J	lb/MMBTu
(1) Natural gas and distillate oil, except (4):		
(i) Low heat release rate	43	0.10
(ii) High heat release rate	86	0.20
(2) Residual oil:		
(i) Low heat release rate	130	0.30
(ii) High heat release rate	170	0.40
(3) Coal:		
(i) Mass-feed stoker	210	0.50
(ii) Spreader stoker and fluidized bed combustion	260	0.60
(iii) Pulverized coal	300	0.70

Fuel/steam generating unit type	Nitrogen oxide emission limits (expressed as NO_2) heat input	
	ng/J	lb/MMBTu
(iv) Lignite, except (v)	260	0.60
(v) Lignite mined in North Dakota, South Dakota, or Montana and combusted in a slag tap furnace	340	0.80
(vi) Coal-derived synthetic fuels	210	0.50
(4) Duct burner used in a combined cycle system:		
(i) Natural gas and distillate oil	86	0.20
(ii) Residual oil	170	0.40

(b) Except as provided under paragraphs (k) and (l) of this section, on and after the date on which the initial performance test is completed or is required to be completed under § 60.8, whichever date comes first, no owner or operator of an affected facility that simultaneously combusts mixtures of only coal, oil, or natural gas shall cause to be discharged into the atmosphere from that affected facility any gases that contain NO_X in excess of a limit determined by the use of the following formula:

$$E_n = \frac{(EL_{go}H_{go}) + (EL_{ro}H_{ro}) + (EL_cH_c)}{(H_{go} + H_{ro} + H_c)}$$

Where:

E_n = NO_X emission limit (expressed as NO_2), ng/J (lb/MMBtu);

EL_{go} = Appropriate emission limit from paragraph (a)(1) for combustion of natural gas or distillate oil, ng/J (lb/MMBtu);

H_{go} = Heat input from combustion of natural gas or distillate oil, J (MMBtu);

EL_{ro} = Appropriate emission limit from paragraph (a)(2) for combustion of residual oil, ng/J (lb/MMBtu);

H_{ro} = Heat input from combustion of residual oil, J (MMBtu);

EL_c = Appropriate emission limit from paragraph (a)(3) for combustion of coal, ng/J (lb/MMBtu); and

H_c = Heat input from combustion of coal, J (MMBtu).

(c) Except as provided under paragraph (d) and (l) of this section, on and after the date on which the initial performance test is completed or is required to be completed under § 60.8, whichever date comes first, no owner or operator of an affected facility that simultaneously combusts coal or oil, natural gas (or any combination of the three), and wood, or any other fuel shall cause to be discharged into the atmosphere any gases that contain NO_X in excess of the emission limit for the coal, oil, natural gas (or any combination of the three), combusted in the affected facility, as determined pursuant to paragraph (a) or (b) of this section. This standard does not apply to an affected facility that is subject to and in compliance with a federally enforceable requirement that limits operation of the affected facility to an annual capacity factor of 10 percent (0.10) or less for coal, oil, natural gas (or any combination of the three).

(d) On and after the date on which the initial performance test is completed or is required to be completed under § 60.8, whichever date comes first, no owner or operator of an affected facility that simultaneously combusts natural gas and/or distillate oil with a potential SO_2 emissions rate of 26 ng/J (0.060 lb/MMBtu) or less with wood, municipal-type solid waste, or other solid fuel, except coal, shall cause to be discharged into the atmosphere from that affected facility any gases that contain NO_X in excess of 130 ng/J (0.30 lb/MMBtu) heat input unless the affected facility has an annual capacity factor for natural gas, distillate oil, or a mixture of these fuels of 10 percent (0.10) or less and is subject to a federally enforceable requirement that limits operation of the affected facility to an annual capacity factor of 10 percent (0.10) or less for natural gas, distillate oil, or a mixture of these fuels.

(e) Except as provided under paragraph (l) of this section, on and after the date on which the initial performance test is completed or is required to be completed under § 60.8, whichever date comes first, no owner or operator of an affected facility that simultaneously combusts only coal, oil, or natural gas with byproduct/waste shall cause to be discharged into the atmosphere any gases that contain NO_X in excess of the emission limit determined by the following formula unless the affected facility has an annual capacity factor for coal, oil, and natural gas of 10 percent (0.10) or less and is subject to a federally enforceable requirement that limits operation of the affected facility to an annual capacity factor of 10 percent (0.10) or less:

(f) Any owner or operator of an affected facility that combusts byproduct/waste with either natural gas or oil may petition the Administrator within 180 days of the initial startup of the affected facility to establish a NO_X emission limit that shall apply specifically to that affected facility when the byproduct/waste is combusted. The petition shall include sufficient and appropriate data, as determined by the Administrator, such as NO_X emissions from the affected facility, waste composition (including nitrogen content), and combustion conditions to allow the Administrator to confirm that the affected facility is unable to comply with the emission limits in paragraph (e) of this section and to determine the appropriate emission limit for the affected facility.

(1) Any owner or operator of an affected facility petitioning for a facility-specific NO_X emission limit under this section shall:

(i) Demonstrate compliance with the emission limits for natural gas and distillate oil in paragraph (a)(1) of this section or for residual oil in paragraph (a)(2) or (l)(1) of this section, as appropriate, by conducting a 30-day performance test as provided in § 60.46b(e). During the performance test only natural gas, distillate oil, or residual oil shall be combusted in the affected facility; and

(ii) Demonstrate that the affected facility is unable to comply with the emission limits for natural gas and distillate oil in paragraph (a)(1) of this section or for residual oil in paragraph (a)(2) or (l)(1) of this section, as appropriate, when gaseous or liquid byproduct/waste is combusted in the affected facility under the same conditions and using the same technological system of emission reduction applied when demonstrating compliance under paragraph (f)(1)(i) of this section.

(2) The NO_X emission limits for natural gas or distillate oil in paragraph (a)(1) of this section or for residual oil in paragraph (a)(2) or (l)(1) of this section, as appropriate, shall be applicable to the affected facility until and unless the petition is approved by the Administrator. If the petition is approved by the Administrator, a facility-specific NO_X emission limit will be established at the NO_X emission level achievable when the affected facility is combusting oil or natural gas and byproduct/waste in a manner that the Administrator determines to be consistent with minimizing NO_X emissions. In lieu of amending this subpart, a letter will be sent to the facility describing the facility-specific NO_X limit. The facility shall use the compliance procedures detailed in the letter and make the letter available to the public. If the Administrator determines it is appropriate, the conditions and requirements of the letter can be reviewed and changed at any point.

(g) Any owner or operator of an affected facility that combusts hazardous waste (as defined by 40 CFR part 261 or 40 CFR part 761) with natural gas or oil may petition the Administrator within 180 days of the initial startup of the affected facility for a waiver from compliance with the NO_X emission limit that applies specifically to that affected facility. The petition must include sufficient and appropriate data, as determined by the Administrator, on NO_X emissions from the affected facility, waste destruction efficiencies, waste composition (including nitrogen content), the quantity of specific wastes to be combusted and combustion conditions to allow the Administrator to determine if the affected facility is able to comply with the NO_X emission limits required by this section. The owner or operator of the affected facility shall demonstrate that when hazardous waste is combusted in the affected facility, thermal destruction efficiency requirements for hazardous waste specified in an applicable federally enforceable requirement preclude compliance with the NO_X emission limits of this section. The NO_X emission limits for natural gas or distillate oil in paragraph (a)(1) of this section or for residual oil in paragraph (a)(2) or (l)(1) of this section, as appropriate, are applicable to the affected facility until and unless the petition is approved by the Administrator. (See 40 CFR 761.70 for regulations applicable to the incineration of materials containing polychlorinated biphenyls (PCB's).) In lieu of amending this subpart, a letter will be sent to the facility describing the facility-specific NO_X limit. The facility shall use the compliance procedures detailed in the letter and make the letter available to the public. If the Administrator determines it is appropriate, the conditions and requirements of the letter can be reviewed and changed at any point.

(h) For purposes of paragraph (i) of this section, the NO_X standards under this section apply at all times including periods of startup, shutdown, or malfunction.

(i) Except as provided under paragraph (j) of this section, compliance with the emission limits under this section is determined on a 30-day rolling average basis.

(j) Compliance with the emission limits under this section is determined on a 24-hour average basis for the initial performance test and on a 3-hour average basis for subsequent performance tests for any affected facilities that:

(1) Combust, alone or in combination, only natural gas, distillate oil, or residual oil with a nitrogen content of 0.30 weight percent or less;

(2) Have a combined annual capacity factor of 10 percent or less for natural gas, distillate oil, and residual oil with a nitrogen content of 0.30 weight percent or less; and

(3) Are subject to a federally enforceable requirement limiting operation of the affected facility to the firing of natural gas, distillate oil, and/or residual oil with a nitrogen content of 0.30 weight percent or less and limiting operation of the affected facility to a combined annual capacity factor of 10 percent or less for natural gas, distillate oil, and residual oil with a nitrogen content of 0.30 weight percent or less.

(k) Affected facilities that meet the criteria described in paragraphs (j)(1), (2), and (3) of this section, and that have a heat input capacity of 73 MW (250 MMBtu/hr) or less, are not subject to the NO_X emission limits under this section.

(l) On and after the date on which the initial performance test is completed or is required to be completed under 60.8, whichever date is first, no owner or operator of an affected facility that commenced construction after July 9, 1997 shall cause to be discharged into the atmosphere from that affected facility any gases that contain NOx (expressed as NO2) in excess of the following limits:

(1) 86 ng/J (0.20 lb/MMBtu) heat input if the affected facility combusts coal, oil, or natural gas (or any combination of the three), alone or with any other fuels. The affected facility is not subject to this limit if it is subject to and in compliance with a federally enforceable requirement that limits operation of the facility to an annual capacity factor of 10 percent (0.10) or less for coal, oil, and natural gas (or any combination of the three); or

(2) If the affected facility has a low heat release rate and combusts natural gas or distillate oil in excess of 30 percent of the heat input on a 30-day rolling average from the combustion of all fuels, a limit determined by use of the following formula:

$$E_n = \frac{(0.10 \times H_{go}) + (0.20 \times H_r)}{(H_{go} + H_r)}$$

Where:

E_n = NO_X emission limit, (lb/MMBtu);

H_{go} = 30-day heat input from combustion of natural gas or distillate oil; and

H_r = 30-day heat input from combustion of any other fuel.

(3) After February 27, 2006, units where more than 10 percent of total annual output is electrical or mechanical may comply with an optional limit of 270 ng/J (2.1 lb/MWh) gross energy output, based on a 30-day rolling average. Units complying with this output-based limit must demonstrate compliance according to the procedures of § 60.48Da(i) of subpart Da of this part, and must monitor emissions according to § 60.49Da(c), (k), through (n) of subpart Da of this part.

[72 FR 32742, June 13, 2007, as amended at 74 FR 5086, Jan. 28, 2009; 77 FR 9459, Feb. 16, 2012]

§ 60.45b Compliance and performance test methods and procedures for sulfur dioxide.

(a) The SO_2 emission standards in § 60.42b apply at all times. Facilities burning coke oven gas alone or in combination with any other gaseous fuels or distillate oil are allowed to exceed the limit 30 operating days per calendar year for SO_2 control system maintenance.

(b) In conducting the performance tests required under § 60.8, the owner or operator shall use the methods and procedures in appendix A (including fuel certification and sampling) of this part or the methods and procedures as specified in this section, except as provided in § 60.8(b). Section 60.8(f) does not apply to this section. The 30-day notice required in § 60.8(d) applies only to the initial performance test unless otherwise specified by the Administrator.

(c) The owner or operator of an affected facility shall conduct performance tests to determine compliance with the percent of potential SO_2 emission rate (% P_s) and the SO_2 emission rate (E_s) pursuant to § 60.42b following the procedures listed below, except as provided under paragraph (d) and (k) of this section.

(1) The initial performance test shall be conducted over 30 consecutive operating days of the steam generating unit. Compliance with the SO_2 standards shall be determined using a 30-day average. The first operating day included in the initial performance test shall be scheduled within 30 days after achieving the maximum production rate at which the affected facility will be operated, but not later than 180 days after initial startup of the facility.

(2) If only coal, only oil, or a mixture of coal and oil is combusted, the following procedures are used:

(i) The procedures in Method 19 of appendix A-7 of this part are used to determine the hourly SO_2 emission rate (E_{ho}) and the 30-day average emission rate (E_{ao}). The hourly averages used to compute the 30-day averages are obtained from the CEMS of § 60.47b(a) or (b).

(ii) The percent of potential SO_2 emission rate (%P_s) emitted to the atmosphere is computed using the following formula:

$$\%P_s = 100\left(1 - \frac{\%R_g}{100}\right)\left(1 - \frac{\%R_f}{100}\right)$$

Where:

%P_s = Potential SO_2 emission rate, percent;

%R_g = SO_2 removal efficiency of the control device as determined by Method 19 of appendix A of this part, in percent; and

%R_f = SO_2 removal efficiency of fuel pretreatment as determined by Method 19 of appendix A of this part, in percent.

(3) If coal or oil is combusted with other fuels, the same procedures required in paragraph (c)(2) of this section are used, except as provided in the following:

(i) An adjusted hourly SO_2 emission rate ($E_{ho}{}^{o}$) is used in Equation 19-19 of Method 19 of appendix A of this part to compute an adjusted 30-day average emission rate (Eao o). The Eho° is computed using the following formula:

$$E_{ho}^{o} = \frac{E_{ho} - E_w(1 - X_1)}{X_1}$$

Where:

$E_{ho}{}^{o}$ = Adjusted hourly SO_2 emission rate, ng/J (lb/MMBtu);

E_{ho} = Hourly SO_2 emission rate, ng/J (lb/MMBtu);

E_w = SO_2 concentration in fuels other than coal and oil combusted in the affected facility, as determined by the fuel sampling and analysis procedures in Method 19 of appendix A of this part, ng/J (lb/MMBtu). The value E_w for each fuel lot is used for each hourly average during the time that the lot is being combusted; and

X_k = Fraction of total heat input from fuel combustion derived from coal, oil, or coal and oil, as determined by applicable procedures in Method 19 of appendix A of this part.

(ii) To compute the percent of potential SO_2 emission rate ($\%P_s$), an adjusted $\%R_g$ ($\%R_g{}^o$) is computed from the adjusted Eao o from paragraph (b)(3)(i) of this section and an adjusted average SO2 inlet rate (Eai o) using the following formula:

$$\%R_g^o = 100\left(1.0 - \frac{E_{ao}^o}{E_{ai}^o}\right)$$

To compute Eai o , an adjusted hourly SO2 inlet rate (Ehi o) is used. The Ehi o is computed using the following formula:

$$E_{hi}^o = \frac{E_{hi} - E_w(1 - X_k)}{X_k}$$

Where:

Ehi o = Adjusted hourly SO2 inlet rate, ng/J (lb/MMBtu); and

E_{hi} = Hourly SO_2 inlet rate, ng/J (lb/MMBtu).

(4) The owner or operator of an affected facility subject to paragraph (c)(3) of this section does not have to measure parameters E_w or X_k if the owner or operator elects to assume that X_k = 1.0. Owners or operators of affected facilities who assume X_k = 1.0 shall:

(i) Determine $\%P_s$ following the procedures in paragraph (c)(2) of this section; and

(ii) Sulfur dioxide emissions (E_s) are considered to be in compliance with SO_2 emission limits under § 60.42b.

(5) The owner or operator of an affected facility that qualifies under the provisions of § 60.42b(d) does not have to measure parameters E_w or X_k in paragraph (c)(3) of this section if the owner or operator of the affected facility elects to measure SO_2 emission rates of the coal or oil following the fuel sampling and analysis procedures in Method 19 of appendix A-7 of this part.

(d) Except as provided in paragraph (j) of this section, the owner or operator of an affected facility that combusts only very low sulfur oil, natural gas, or a mixture of these fuels, has an annual capacity factor for oil of 10 percent (0.10) or less, and is subject to a federally enforceable requirement limiting operation of the affected facility to an annual capacity factor for oil of 10 percent (0.10) or less shall:

(1) Conduct the initial performance test over 24 consecutive steam generating unit operating hours at full load;

(2) Determine compliance with the standards after the initial performance test based on the arithmetic average of the hourly emissions data during each steam generating unit operating day if a CEMS is used, or based on a daily average if Method 6B of appendix A of this part or fuel sampling and analysis procedures under Method 19 of appendix A of this part are used.

(e) The owner or operator of an affected facility subject to § 60.42b(d)(1) shall demonstrate the maximum design capacity of the steam generating unit by operating the facility at maximum capacity for 24 hours. This demonstration will be made during the initial performance test and a subsequent demonstration may be requested at any other time. If the 24-hour average firing rate for the affected facility is less than the maximum design capacity provided by the manufacturer of the affected facility, the 24-hour average firing rate shall be used to determine the capacity utilization rate for the affected facility, otherwise the maximum design capacity provided by the manufacturer is used.

(f) For the initial performance test required under § 60.8, compliance with the SO_2 emission limits and percent reduction requirements under § 60.42b is based on the average emission rates and the average percent reduction for SO_2 for the first 30 consecutive steam generating unit operating days, except as provided under paragraph (d) of this section. The initial performance test is the only test for which at least 30 days prior notice is required unless otherwise specified by the Administrator. The initial performance test is to be scheduled so that the first steam generating unit operating day of the 30 successive steam generating unit operating days is completed within 30 days after achieving the maximum production rate at which the affected facility will be operated, but not later than 180 days after initial startup of the facility. The boiler load during the 30-day period does not have to be the maximum design load, but must be representative of future operating conditions and include at least one 24-hour period at full load.

(g) After the initial performance test required under § 60.8, compliance with the SO_2 emission limits and percent reduction requirements under § 60.42b is based on the average emission rates and the average percent reduction for SO_2 for 30 successive steam generating unit operating days, except as provided under paragraph (d). A separate performance test is completed at the end of each steam generating unit operating day after the initial performance test, and a new 30-day average emission rate and percent reduction for SO_2 are calculated to show compliance with the standard.

(h) Except as provided under paragraph (i) of this section, the owner or operator of an affected facility shall use all valid SO_2 emissions data in calculating $\%P_s$ and E_{ho} under paragraph (c), of this section whether or not the minimum emissions data requirements under § 60.46b are achieved. All valid emissions data, including valid SO_2 emission data collected during periods of startup, shutdown and malfunction, shall be used in calculating $\%P_s$ and E_{ho} pursuant to paragraph (c) of this section.

(i) During periods of malfunction or maintenance of the SO_2 control systems when oil is combusted as provided under § 60.42b(i), emission data are not used to calculate $\%P_s$ or E_s under § 60.42b(a), (b) or (c), however, the emissions data are used to determine compliance with the emission limit under § 60.42b(i).

(j) The owner or operator of an affected facility that only combusts very low sulfur oil, natural gas, or a mixture of these fuels with any other fuels not subject to an SO_2 standard is not subject to the compliance and performance testing requirements of this section if the owner or operator obtains fuel receipts as described in § 60.49b(r).

(k) The owner or operator of an affected facility seeking to demonstrate compliance in §§ 60.42b(d)(4), 60.42b(j), 60.42b(k)(2), and 60.42b(k)(3) (when not burning coal) shall follow the applicable procedures in § 60.49b(r).

[72 FR 32742, June 13, 2007, as amended at 74 FR 5086, Jan. 28, 2009]

§ 60.46b Compliance and performance test methods and procedures for particulate matter and nitrogen oxides.

(a) The PM emission standards and opacity limits under § 60.43b apply at all times except during periods of startup, shutdown, or malfunction. The NO_X emission standards under § 60.44b apply at all times.

(b) Compliance with the PM emission standards under § 60.43b shall be determined through performance testing as described in paragraph (d) of this section, except as provided in paragraph (i) of this section.

(c) Compliance with the NO_X emission standards under § 60.44b shall be determined through performance testing under paragraph (e) or (f), or under paragraphs (g) and (h) of this section, as applicable.

(d) To determine compliance with the PM emission limits and opacity limits under § 60.43b, the owner or operator of an affected facility shall conduct an initial performance test as required under § 60.8, and shall conduct subsequent performance tests as requested by the Administrator, using the following procedures and reference methods:

(1) Method 3A or 3B of appendix A-2 of this part is used for gas analysis when applying Method 5 of appendix A-3 of this part or Method 17 of appendix A-6 of this part.

(2) Method 5, 5B, or 17 of appendix A of this part shall be used to measure the concentration of PM as follows:

(i) Method 5 of appendix A of this part shall be used at affected facilities without wet flue gas desulfurization (FGD) systems; and

(ii) Method 17 of appendix A-6 of this part may be used at facilities with or without wet scrubber systems provided the stack gas temperature does not exceed a temperature of 160 °C (320 °F). The procedures of sections 8.1 and 11.1 of Method 5B of appendix A-3 of this part may be used in Method 17 of appendix A-6 of this part only if it is used after a wet FGD system. Do not use Method 17 of appendix A-6 of this part after wet FGD systems if the effluent is saturated or laden with water droplets.

(iii) Method 5B of appendix A of this part is to be used only after wet FGD systems.

(3) Method 1 of appendix A of this part is used to select the sampling site and the number of traverse sampling points. The sampling time for each run is at least 120 minutes and the minimum sampling volume is 1.7 dscm (60 dscf) except that smaller sampling times or volumes may be approved by the Administrator when necessitated by process variables or other factors.

(4) For Method 5 of appendix A of this part, the temperature of the sample gas in the probe and filter holder is monitored and is maintained at 160±14 °C (320±25 °F).

(5) For determination of PM emissions, the oxygen (O_2) or CO_2 sample is obtained simultaneously with each run of Method 5, 5B, or 17 of appendix A of this part by traversing the duct at the same sampling location.

(6) For each run using Method 5, 5B, or 17 of appendix A of this part, the emission rate expressed in ng/J heat input is determined using:

(i) The O_2 or CO_2 measurements and PM measurements obtained under this section;

(ii) The dry basis F factor; and

(iii) The dry basis emission rate calculation procedure contained in Method 19 of appendix A of this part.

(7) Method 9 of appendix A of this part is used for determining the opacity of stack emissions.

(e) To determine compliance with the emission limits for NO_X required under § 60.44b, the owner or operator of an affected facility shall conduct the performance test as required under § 60.8 using the continuous system for monitoring NO_X under § 60.48(b).

(1) For the initial compliance test, NO_X from the steam generating unit are monitored for 30 successive steam generating unit operating days and the 30-day average emission rate is used to determine compliance with the NO_X emission standards under § 60.44b. The 30-day average emission rate is calculated as the average of all hourly emissions data recorded by the monitoring system during the 30-day test period.

(2) Following the date on which the initial performance test is completed or is required to be completed in § 60.8, whichever date comes first, the owner or operator of an affected facility which combusts coal (except as specified under § 60.46b(e)(4)) or which combusts residual oil having a nitrogen content greater than 0.30 weight percent shall determine compliance with the NO_X emission standards in § 60.44b on a continuous basis through the use of a 30-day rolling average emission rate. A new 30-day rolling average emission rate is calculated for each steam generating unit operating day as the average of all of the hourly NO_X emission data for the preceding 30 steam generating unit operating days.

(3) Following the date on which the initial performance test is completed or is required to be completed under § 60.8, whichever date comes first, the owner or operator of an affected facility that has a heat input capacity greater than 73 MW (250 MMBtu/hr) and that combusts natural gas, distillate oil, or residual oil having a nitrogen content of 0.30 weight percent or less shall determine compliance with the NO_X standards under § 60.44b on a continuous basis through the use of a 30-day rolling average emission rate. A new 30-day rolling average emission rate is calculated each steam generating unit operating day as the average of all of the hourly NO_X emission data for the preceding 30 steam generating unit operating days.

(4) Following the date on which the initial performance test is completed or required to be completed under § 60.8, whichever date comes first, the owner or operator of an affected facility that has a heat input capacity of 73 MW (250 MMBtu/hr) or less and that combusts natural gas, distillate oil, gasified coal, or residual oil having a nitrogen content of 0.30 weight percent or less shall upon request determine compliance with the NO_X standards in § 60.44b through the use of a 30-day performance test. During periods when performance tests are not requested, NO_X emissions data collected pursuant to § 60.48b(g)(1) or § 60.48b(g)(2) are used to calculate a 30-day rolling average emission rate on a daily basis and used to prepare excess emission reports, but will not be used to determine compliance with the NO_X emission standards. A new 30-day rolling average emission rate is calculated each steam generating unit operating day as the average of all of the hourly NO_X emission data for the preceding 30 steam generating unit operating days.

(5) If the owner or operator of an affected facility that combusts residual oil does not sample and analyze the residual oil for nitrogen content, as specified in § 60.49b(e), the requirements of § 60.48b(g)(1) apply and the provisions of § 60.48b(g)(2) are inapplicable.

(f) To determine compliance with the emissions limits for NO_X required by § 60.44b(a)(4) or § 60.44b(l) for duct burners used in combined cycle systems, either of the procedures described in paragraph (f)(1) or (2) of this section may be used:

(1) The owner or operator of an affected facility shall conduct the performance test required under § 60.8 as follows:

(i) The emissions rate (E) of NO_X shall be computed using Equation 1 in this section:

$$E = E_{sg} + \left(\frac{H_g}{H_b}\right)\left(E_{sg} - E_g\right) \qquad \text{(Eq.1)}$$

Where:

E = Emissions rate of NO_X from the duct burner, ng/J (lb/MMBtu) heat input;

E_{sg} = Combined effluent emissions rate, in ng/J (lb/MMBtu) heat input using appropriate F factor as described in Method 19 of appendix A of this part;

H_g = Heat input rate to the combustion turbine, in J/hr (MMBtu/hr);

H_b = Heat input rate to the duct burner, in J/hr (MMBtu/hr); and

E_g = Emissions rate from the combustion turbine, in ng/J (lb/MMBtu) heat input calculated using appropriate F factor as described in Method 19 of appendix A of this part.

(ii) Method 7E of appendix A of this part shall be used to determine the NO_X concentrations. Method 3A or 3B of appendix A of this part shall be used to determine O_2 concentration.

(iii) The owner or operator shall identify and demonstrate to the Administrator's satisfaction suitable methods to determine the average hourly heat input rate to the combustion turbine and the average hourly heat input rate to the affected duct burner.

(iv) Compliance with the emissions limits under § 60.44b(a)(4) or § 60.44b(l) is determined by the three-run average (nominal 1-hour runs) for the initial and subsequent performance tests; or

(2) The owner or operator of an affected facility may elect to determine compliance on a 30-day rolling average basis by using the CEMS specified under § 60.48b for measuring NO_X and O_2 and meet the requirements of § 60.48b. The sampling site shall be located at the outlet from the steam generating unit. The NO_X emissions rate at the outlet from the steam generating unit shall constitute the NO_X emissions rate from the duct burner of the combined cycle system.

(g) The owner or operator of an affected facility described in § 60.44b(j) or § 60.44b(k) shall demonstrate the maximum heat input capacity of the steam generating unit by operating the facility at maximum capacity for 24 hours. The owner or operator of an affected facility shall determine the maximum heat input capacity using the heat loss method or the heat input method described in sections 5 and 7.3 of the ASME *Power Test Codes* 4.1 (incorporated by reference, see § 60.17). This demonstration of maximum heat input capacity shall be made during the initial performance test for affected facilities that meet the criteria of § 60.44b(j). It shall be made within 60 days after achieving the maximum production rate at which the affected facility will be operated, but not later than 180 days after initial start-up of each facility, for affected facilities meeting the criteria of § 60.44b(k). Subsequent demonstrations may be required by the Administrator at any other time. If this demonstration indicates that the maximum heat input capacity of the affected facility is less than that stated by the manufacturer of the affected facility, the maximum heat input capacity determined during this demonstration shall be used to determine the capacity utilization rate for the affected facility. Otherwise, the maximum heat input capacity provided by the manufacturer is used.

(h) The owner or operator of an affected facility described in § 60.44b(j) that has a heat input capacity greater than 73 MW (250 MMBtu/hr) shall:

(1) Conduct an initial performance test as required under § 60.8 over a minimum of 24 consecutive steam generating unit operating hours at maximum heat input capacity to demonstrate compliance with the NO_X emission standards under § 60.44b using Method 7, 7A, 7E of appendix A of this part, or other approved reference methods; and

(2) Conduct subsequent performance tests once per calendar year or every 400 hours of operation (whichever comes first) to demonstrate compliance with the NO_X emission standards under § 60.44b over a minimum of 3 consecutive steam generating unit operating hours at maximum heat input capacity using Method 7, 7A, 7E of appendix A of this part, or other approved reference methods.

(i) The owner or operator of an affected facility seeking to demonstrate compliance with the PM limit in paragraphs § 60.43b(a)(4) or § 60.43b(h)(5) shall follow the applicable procedures in § 60.49b(r).

(j) In place of PM testing with Method 5 or 5B of appendix A-3 of this part, or Method 17 of appendix A-6 of this part, an owner or operator may elect to install, calibrate, maintain, and operate a CEMS for monitoring PM emissions discharged to the atmosphere and record the output of the system. The owner or operator of an affected facility who elects to continuously monitor PM emissions instead of conducting performance testing using Method 5 or 5B of appendix A-3 of this part or Method 17 of appendix A-6 of this part shall comply with the requirements specified in paragraphs (j)(1) through (j)(14) of this section.

(1) Notify the Administrator one month before starting use of the system.

(2) Notify the Administrator one month before stopping use of the system.

(3) The monitor shall be installed, evaluated, and operated in accordance with § 60.13 of subpart A of this part.

(4) The initial performance evaluation shall be completed no later than 180 days after the date of initial startup of the affected facility, as specified under § 60.8 of subpart A of this part or within 180 days of notification to the Administrator of use of the CEMS if the owner or operator was previously determining compliance by Method 5, 5B, or 17 of appendix A of this part performance tests, whichever is later.

(5) The owner or operator of an affected facility shall conduct an initial performance test for PM emissions as required under § 60.8 of subpart A of this part. Compliance with the PM emission limit shall be determined by using the CEMS specified in paragraph (j) of this section to measure PM and calculating a 24-hour block arithmetic average emission concentration using EPA Reference Method 19 of appendix A of this part, section 4.1.

(6) Compliance with the PM emission limit shall be determined based on the 24-hour daily (block) average of the hourly arithmetic average emission concentrations using CEMS outlet data.

(7) At a minimum, valid CEMS hourly averages shall be obtained as specified in paragraphs (j)(7)(i) of this section for 75 percent of the total operating hours per 30-day rolling average.

(i) At least two data points per hour shall be used to calculate each 1-hour arithmetic average.

(ii) [Reserved]

(8) The 1-hour arithmetic averages required under paragraph (j)(7) of this section shall be expressed in ng/J or lb/MMBtu heat input and shall be used to calculate the boiler operating day daily arithmetic average emission concentrations. The 1-hour arithmetic averages shall be calculated using the data points required under § 60.13(e)(2) of subpart A of this part.

(9) All valid CEMS data shall be used in calculating average emission concentrations even if the minimum CEMS data requirements of paragraph (j)(7) of this section are not met.

(10) The CEMS shall be operated according to Performance Specification 11 in appendix B of this part.

(11) During the correlation testing runs of the CEMS required by Performance Specification 11 in appendix B of this part, PM and O_2 (or CO_2) data shall be collected concurrently (or within a 30-to 60-minute period) by both the continuous emission monitors and performance tests conducted using the following test methods.

(i) For PM, Method 5 or 5B of appendix A-3 of this part or Method 17 of appendix A-6 of this part shall be used; and

(ii) For O_2 (or CO_2), Method 3A or 3B of appendix A-2 of this part, as applicable shall be used.

(12) Quarterly accuracy determinations and daily calibration drift tests shall be performed in accordance with procedure 2 in appendix F of this part. Relative Response Audit's must be performed annually and Response Correlation Audits must be performed every 3 years.

(13) When PM emissions data are not obtained because of CEMS breakdowns, repairs, calibration checks, and zero and span adjustments, emissions data shall be obtained by using other monitoring systems as approved by the Administrator or EPA Reference Method 19 of appendix A of this part to provide, as necessary, valid emissions data for a minimum of 75 percent of total operating hours per 30-day rolling average.

(14) As of January 1, 2012, and within 90 days after the date of completing each performance test, as defined in § 60.8, conducted to demonstrate compliance with this subpart, you must submit relative accuracy test audit (*i.e.,* reference method) data and performance test (*i.e.,* compliance test) data, except opacity data, electronically to EPA's Central Data Exchange (CDX) by using the Electronic Reporting Tool (ERT) (see *http://www.epa.gov/ttn/chief/ert/ert_tool.html/*) or other compatible electronic spreadsheet. Only data collected using test methods compatible with ERT are subject to this requirement to be submitted electronically into EPA's WebFIRE database.

[72 FR 32742, June 13, 2007, as amended at 74 FR 5086, Jan. 28, 2009; 76 FR 3523, Jan. 20, 2011; 77 FR 9460, Feb. 16, 2012]

§ 60.47b Emission monitoring for sulfur dioxide.

(a) Except as provided in paragraphs (b) and (f) of this section, the owner or operator of an affected facility subject to the SO_2 standards in § 60.42b shall install, calibrate, maintain, and operate CEMS for measuring SO_2 concentrations and either O_2 or CO_2 concentrations and shall record the output of the systems. For units complying with the percent reduction standard, the SO_2 and either O_2 or CO_2 concentrations shall both be monitored at the inlet and outlet of the SO_2 control device. If the owner or operator has installed and certified SO_2 and O_2 or CO_2 CEMS according to the requirements of § 75.20(c)(1) of this chapter and appendix A to part 75 of this chapter, and is continuing to meet the ongoing quality assurance requirements of § 75.21 of this chapter and appendix B to part 75 of this chapter, those CEMS may be used to meet the requirements of this section, provided that:

(1) When relative accuracy testing is conducted, SO_2 concentration data and CO_2 (or O_2) data are collected simultaneously; and

(2) In addition to meeting the applicable SO_2 and CO_2 (or O_2) relative accuracy specifications in Figure 2 of appendix B to part 75 of this chapter, the relative accuracy (RA) standard in section 13.2 of Performance Specification 2 in appendix B to this part is met when the RA is calculated on a lb/MMBtu basis; and

(3) The reporting requirements of § 60.49b are met. SO_2 and CO_2 (or O_2) data used to meet the requirements of § 60.49b shall not include substitute data values derived from the missing data procedures in subpart D of part 75 of this chapter, nor shall the SO_2 data have been bias adjusted according to the procedures of part 75 of this chapter.

(b) As an alternative to operating CEMS as required under paragraph (a) of this section, an owner or operator may elect to determine the average SO_2 emissions and percent reduction by:

(1) Collecting coal or oil samples in an as-fired condition at the inlet to the steam generating unit and analyzing them for sulfur and heat content according to Method 19 of appendix A of this part. Method 19 of appendix A of this part provides procedures for converting these measurements into the format to be used in calculating the average SO_2 input rate, or

(2) Measuring SO_2 according to Method 6B of appendix A of this part at the inlet or outlet to the SO_2 control system. An initial stratification test is required to verify the adequacy of the Method 6B of appendix A of this part sampling location. The stratification test shall consist of three paired runs of a suitable SO_2 and CO_2 measurement train operated at the candidate location and a second similar train operated according to the procedures in section 3.2 and the applicable procedures in section 7 of Performance Specification 2. Method 6B of appendix A of this part, Method 6A of appendix A of this part, or a combination of Methods 6 and 3 or 3B of appendix A of this part or Methods 6C and 3A of appendix A of this part are suitable measurement techniques. If Method 6B of appendix A of this part is used for the second train, sampling time and timer operation may be adjusted for the stratification test as long as an adequate sample volume is collected; however, both sampling trains are to be operated similarly. For the location to be adequate for Method 6B of appendix A of this part 24-hour tests, the mean of the absolute difference between the three paired runs must be less than 10 percent.

(3) A daily SO_2 emission rate, E_D , shall be determined using the procedure described in Method 6A of appendix A of this part, section 7.6.2 (Equation 6A-8) and stated in ng/J (lb/MMBtu) heat input.

(4) The mean 30-day emission rate is calculated using the daily measured values in ng/J (lb/MMBtu) for 30 successive steam generating unit operating days using equation 19-20 of Method 19 of appendix A of this part.

(c) The owner or operator of an affected facility shall obtain emission data for at least 75 percent of the operating hours in at least 22 out of 30 successive boiler operating days. If this minimum data requirement is not met with a single monitoring system, the owner or operator of the affected facility shall supplement the emission data with data collected with other monitoring systems as approved by the Administrator or the reference methods and procedures as described in paragraph (b) of this section.

(d) The 1-hour average SO_2 emission rates measured by the CEMS required by paragraph (a) of this section and required under § 60.13(h) is expressed in ng/J or lb/MMBtu heat input and is used to calculate the average emission rates under § 60.42(b). Each 1-hour average SO_2 emission rate must be based on 30 or more minutes of steam generating unit operation. The hourly averages shall be calculated according to § 60.13(h)(2). Hourly SO_2 emission rates are not calculated if the affected facility is operated less than 30 minutes in a given clock hour and are not counted toward determination of a steam generating unit operating day.

(e) The procedures under § 60.13 shall be followed for installation, evaluation, and operation of the CEMS.

(1) Except as provided for in paragraph (e)(4) of this section, all CEMS shall be operated in accordance with the applicable procedures under Performance Specifications 1, 2, and 3 of appendix B of this part.

(2) Except as provided for in paragraph (e)(4) of this section, quarterly accuracy determinations and daily calibration drift tests shall be performed in accordance with Procedure 1 of appendix F of this part.

(3) For affected facilities combusting coal or oil, alone or in combination with other fuels, the span value of the SO_2 CEMS at the inlet to the SO_2 control device is 125 percent of the maximum estimated hourly potential SO_2 emissions of the fuel combusted, and the span value of the CEMS at the outlet to the SO_2 control device is 50 percent of the maximum estimated hourly potential SO_2 emissions of the fuel combusted. Alternatively, SO_2 span values determined according to section 2.1.1 in appendix A to part 75 of this chapter may be used.

(4) As an alternative to meeting the requirements of requirements of paragraphs (e)(1) and (e)(2) of this section, the owner or operator may elect to implement the following alternative data accuracy assessment procedures:

(i) For all required CO_2 and O_2 monitors and for SO_2 and NO_X monitors with span values greater than or equal to 100 ppm, the daily calibration error test and calibration adjustment procedures described in sections 2.1.1 and 2.1.3 of appendix B to part 75 of this chapter may be followed instead of the CD assessment procedures in Procedure 1, section 4.1 of appendix F to this part.

(ii) For all required CO_2 and O_2 monitors and for SO_2 and NO_X monitors with span values greater than 30 ppm, quarterly linearity checks may be performed in accordance with section 2.2.1 of appendix B to part 75 of this chapter, instead of performing the cylinder gas audits (CGAs) described in Procedure 1, section 5.1.2 of appendix F to this part. If this option is selected: The frequency of the linearity checks shall be as specified in section 2.2.1 of appendix B to part 75 of this chapter; the applicable linearity specifications in section 3.2 of appendix A to part 75 of this chapter shall be met; the data validation and out-of-control criteria in section 2.2.3 of appendix B to part 75 of this chapter shall be followed instead of the excessive audit inaccuracy and out-of-control criteria in Procedure 1, section 5.2 of appendix F to this part; and the grace period provisions in section 2.2.4 of appendix B to part 75 of this chapter shall apply. For the purposes of data validation under this subpart, the cylinder gas audits described in Procedure 1, section 5.1.2 of appendix F to this part shall be performed for SO_2 and NO_X span values less than or equal to 30 ppm; and

(iii) For SO_2 , CO_2 , and O_2 monitoring systems and for NO_X emission rate monitoring systems, RATAs may be performed in accordance with section 2.3 of appendix B to part 75 of this chapter instead of following the procedures described in Procedure 1, section 5.1.1 of appendix F to this part. If this option is selected: The frequency of each RATA shall be as specified in section 2.3.1 of appendix B to part 75 of this chapter; the applicable relative accuracy specifications shown in Figure 2 in appendix B to part 75 of this chapter shall be met; the data validation and out-of-control criteria in section 2.3.2 of appendix B to part 75 of this chapter shall be followed instead of the excessive audit inaccuracy and out-of-control criteria in Procedure 1, section 5.2 of appendix F to this part; and the grace period provisions in section 2.3.3 of appendix B to part 75 of this chapter shall apply. For the purposes of data validation under this subpart, the relative accuracy specification in section 13.2 of Performance Specification 2 in appendix B to this part shall be met on a lb/MMBtu basis for SO_2 (regardless of the SO_2 emission level during the RATA), and for NO_X when the average NO_X emission rate measured by the reference method during the RATA is less than 0.100 lb/MMBtu.

(f) The owner or operator of an affected facility that combusts very low sulfur oil or is demonstrating compliance under § 60.45b(k) is not subject to the emission monitoring requirements under paragraph (a) of this section if the owner or operator maintains fuel records as described in § 60.49b(r).

[72 FR 32742, June 13, 2007, as amended at 74 FR 5087, Jan. 28, 2009]

§ 60.48b Emission monitoring for particulate matter and nitrogen oxides.

(a) Except as provided in paragraph (j) of this section, the owner or operator of an affected facility subject to the opacity standard under § 60.43b shall install, calibrate, maintain, and operate a continuous opacity monitoring systems (COMS) for measuring the opacity of emissions discharged to the atmosphere and record the output of the system. The owner or operator of an affected facility subject to an opacity standard under § 60.43b and meeting the conditions under paragraphs (j)(1), (2), (3), (4), (5), or (6) of this section who elects not to use a COMS shall conduct a performance test using Method 9 of appendix A-4 of this part and the procedures in § 60.11 to demonstrate compliance with the applicable limit in § 60.43b by April 29, 2011, within 45 days of stopping use of an existing COMS, or within 180 days after initial startup of the facility, whichever is later, and shall comply with either paragraphs (a)(1), (a)(2), or (a)(3) of this section. The observation period for Method 9 of appendix A-4 of this part performance tests may be reduced from 3 hours to 60 minutes if all 6-minute averages are less than 10 percent and all individual 15-second observations are less than or equal to 20 percent during the initial 60 minutes of observation.

(1) Except as provided in paragraph (a)(2) and (a)(3) of this section, the owner or operator shall conduct subsequent Method 9 of appendix A-4 of this part performance tests using the procedures in paragraph (a) of this section according to the applicable schedule in paragraphs (a)(1)(i) through (a)(1)(iv) of this section, as determined by the most recent Method 9 of appendix A-4 of this part performance test results.

(i) If no visible emissions are observed, a subsequent Method 9 of appendix A-4 of this part performance test must be completed within 12 calendar months from the date that the most recent performance test was conducted or within 45 days of the next day that fuel with an opacity standard is combusted, whichever is later;

(ii) If visible emissions are observed but the maximum 6-minute average opacity is less than or equal to 5 percent, a subsequent Method 9 of appendix A-4 of this part performance test must be completed within 6 calendar months from the date that the most recent performance test was conducted or within 45 days of the next day that fuel with an opacity standard is combusted, whichever is later;

(iii) If the maximum 6-minute average opacity is greater than 5 percent but less than or equal to 10 percent, a subsequent Method 9 of appendix A-4 of this part performance test must be completed within 3 calendar months from the date that the most recent performance test was conducted or within 45 days of the next day that fuel with an opacity standard is combusted, whichever is later; or

(iv) If the maximum 6-minute average opacity is greater than 10 percent, a subsequent Method 9 of appendix A-4 of this part performance test must be completed within 45 calendar days from the date that the most recent performance test was conducted.

(2) If the maximum 6-minute opacity is less than 10 percent during the most recent Method 9 of appendix A-4 of this part performance test, the owner or operator may, as an alternative to performing subsequent Method 9 of appendix A-4 of this part performance tests, elect to perform subsequent monitoring using Method 22 of appendix A-7 of this part according to the procedures specified in paragraphs (a)(2)(i) and (ii) of this section.

(i) The owner or operator shall conduct 10 minute observations (during normal operation) each operating day the affected facility fires fuel for which an opacity standard is applicable using Method 22 of appendix A-7 of this part and demonstrate that the sum of the occurrences of any visible emissions is not in excess of 5 percent of the observation period (*i.e.* , 30 seconds per 10 minute period). If the sum of the occurrence of any visible emissions is greater than 30 seconds during the initial 10 minute observation, immediately conduct a 30 minute observation. If the sum of the occurrence of visible emissions is greater than 5 percent of the observation period (*i.e.,* 90 seconds per 30 minute period), the owner or operator shall either document and adjust the operation of the facility and demonstrate within 24 hours that the sum of the occurrence of visible emissions is equal to or less than 5 percent during a 30 minute observation (*i.e.,* 90 seconds) or conduct a new Method 9 of appendix A-4 of this part performance test using the procedures in paragraph (a) of this section within 45 calendar days according to the requirements in § 60.46d(d)(7).

(ii) If no visible emissions are observed for 10 operating days during which an opacity standard is applicable, observations can be reduced to once every 7 operating days during which an opacity standard is applicable. If any visible emissions are observed, daily observations shall be resumed.

(3) If the maximum 6-minute opacity is less than 10 percent during the most recent Method 9 of appendix A-4 of this part performance test, the owner or operator may, as an alternative to performing subsequent Method 9 of appendix A-4 performance tests, elect to perform subsequent monitoring using a digital opacity compliance system according to a site-specific monitoring plan approved by the Administrator. The observations shall be similar, but not necessarily identical, to the requirements in paragraph (a)(2) of this section. For reference purposes in preparing the monitoring plan, see OAQPS “Determination of Visible Emission Opacity from Stationary Sources Using Computer-Based Photographic Analysis Systems.” This document is available from the U.S. Environmental Protection Agency (U.S. EPA); Office of Air Quality and Planning Standards; Sector Policies and Programs Division; Measurement Policy Group (D243-02), Research Triangle Park, NC 27711. This document is also available on the Technology Transfer Network (TTN) under Emission Measurement Center Preliminary Methods.

(b) Except as provided under paragraphs (g), (h), and (i) of this section, the owner or operator of an affected facility subject to a NO_X standard under § 60.44b shall comply with either paragraphs (b)(1) or (b)(2) of this section.

(1) Install, calibrate, maintain, and operate CEMS for measuring NO_X and O_2 (or CO_2) emissions discharged to the atmosphere, and shall record the output of the system; or

(2) If the owner or operator has installed a NO_X emission rate CEMS to meet the requirements of part 75 of this chapter and is continuing to meet the ongoing requirements of part 75 of this chapter, that CEMS may be used to meet the requirements of this section, except that the owner or operator shall also meet the requirements of § 60.49b. Data reported to meet the requirements of § 60.49b shall not include data substituted using the missing data procedures in subpart D of part 75 of this chapter, nor shall the data have been bias adjusted according to the procedures of part 75 of this chapter.

(c) The CEMS required under paragraph (b) of this section shall be operated and data recorded during all periods of operation of the affected facility except for CEMS breakdowns and repairs. Data is recorded during calibration checks, and zero and span adjustments.

(d) The 1-hour average NO_X emission rates measured by the continuous NO_X monitor required by paragraph (b) of this section and required under § 60.13(h) shall be expressed in ng/J or lb/MMBtu heat input and shall be used to calculate the average emission rates under § 60.44b. The 1-hour averages shall be calculated using the data points required under § 60.13(h)(2).

(e) The procedures under § 60.13 shall be followed for installation, evaluation, and operation of the continuous monitoring systems.

(1) For affected facilities combusting coal, wood or municipal-type solid waste, the span value for a COMS shall be between 60 and 80 percent.

(2) For affected facilities combusting coal, oil, or natural gas, the span value for NO_X is determined using one of the following procedures:

(i) Except as provided under paragraph (e)(2)(ii) of this section, NO_X span values shall be determined as follows:

Fuel	**Span values for NO_X (ppm)**
Natural gas	500.
Oil	500.
Coal	1,000.
Mixtures	500 (x + y) + 1,000z.

Where:

x = Fraction of total heat input derived from natural gas;

y = Fraction of total heat input derived from oil; and

z = Fraction of total heat input derived from coal.

(ii) As an alternative to meeting the requirements of paragraph (e)(2)(i) of this section, the owner or operator of an affected facility may elect to use the NO_X span values determined according to section 2.1.2 in appendix A to part 75 of this chapter.

(3) All span values computed under paragraph (e)(2)(i) of this section for combusting mixtures of regulated fuels are rounded to the nearest 500 ppm. Span values computed under paragraph (e)(2)(ii) of this section shall be rounded off according to section 2.1.2 in appendix A to part 75 of this chapter.

(f) When NO_X emission data are not obtained because of CEMS breakdowns, repairs, calibration checks and zero and span adjustments, emission data will be obtained by using standby monitoring systems, Method 7 of appendix A of this part, Method 7A of appendix A of this part, or other approved reference methods to provide emission data for a minimum of 75 percent of the operating hours in each steam generating unit operating day, in at least 22 out of 30 successive steam generating unit operating days.

(g) The owner or operator of an affected facility that has a heat input capacity of 73 MW (250 MMBtu/hr) or less, and that has an annual capacity factor for residual oil having a nitrogen content of 0.30 weight percent or less, natural gas, distillate oil, gasified coal, or any mixture of these fuels, greater than 10 percent (0.10) shall:

(1) Comply with the provisions of paragraphs (b), (c), (d), (e)(2), (e)(3), and (f) of this section; or

(2) Monitor steam generating unit operating conditions and predict NO_X emission rates as specified in a plan submitted pursuant to § 60.49b(c).

(h) The owner or operator of a duct burner, as described in § 60.41b, that is subject to the NO_X standards in § 60.44b(a)(4), § 60.44b(e), or § 60.44b(l) is not required to install or operate a continuous emissions monitoring system to measure NO_X emissions.

(i) The owner or operator of an affected facility described in § 60.44b(j) or § 60.44b(k) is not required to install or operate a CEMS for measuring NO_X emissions.

(j) The owner or operator of an affected facility that meets the conditions in either paragraph (j)(1), (2), (3), (4), (5), (6), or (7) of this section is not required to install or operate a COMS if:

(1) The affected facility uses a PM CEMS to monitor PM emissions; or

(2) The affected facility burns only liquid (excluding residual oil) or gaseous fuels with potential SO_2 emissions rates of 26 ng/J (0.060 lb/MMBtu) or less and does not use a post-combustion technology to reduce SO_2 or PM emissions. The owner or operator must maintain fuel records of the sulfur content of the fuels burned, as described under § 60.49b(r); or

(3) The affected facility burns coke oven gas alone or in combination with fuels meeting the criteria in paragraph (j)(2) of this section and does not use a post-combustion technology to reduce SO_2 or PM emissions; or

(4) The affected facility does not use post-combustion technology (except a wet scrubber) for reducing PM, SO_2 , or carbon monoxide (CO) emissions, burns only gaseous fuels or fuel oils that contain less than or equal to 0.30 weight percent sulfur, and is operated such that emissions of CO to the atmosphere from the affected facility are maintained at levels less than or equal to 0.15 lb/MMBtu on a steam generating unit operating day average basis. Owners and operators of affected facilities electing to comply with this paragraph must demonstrate compliance according to the procedures specified in paragraphs (j)(4)(i) through (iv) of this section; or

(i) You must monitor CO emissions using a CEMS according to the procedures specified in paragraphs (j)(4)(i)(A) through (D) of this section.

(A) The CO CEMS must be installed, certified, maintained, and operated according to the provisions in § 60.58b(i)(3) of subpart Eb of this part.

(B) Each 1-hour CO emissions average is calculated using the data points generated by the CO CEMS expressed in parts per million by volume corrected to 3 percent oxygen (dry basis).

(C) At a minimum, valid 1-hour CO emissions averages must be obtained for at least 90 percent of the operating hours on a 30-day rolling average basis. The 1-hour averages are calculated using the data points required in § 60.13(h)(2).

(D) Quarterly accuracy determinations and daily calibration drift tests for the CO CEMS must be performed in accordance with procedure 1 in appendix F of this part.

(ii) You must calculate the 1-hour average CO emissions levels for each steam generating unit operating day by multiplying the average hourly CO output concentration measured by the CO CEMS times the corresponding average hourly flue gas flow rate and divided by the corresponding average hourly heat input to the affected source. The 24-hour average CO emission level is determined by calculating the arithmetic average of the hourly CO emission levels computed for each steam generating unit operating day.

(iii) You must evaluate the preceding 24-hour average CO emission level each steam generating unit operating day excluding periods of affected source startup, shutdown, or malfunction. If the 24-hour average CO emission level is greater than 0.15 lb/MMBtu, you must initiate investigation of the relevant equipment and control systems within 24 hours of the first discovery of the high emission incident and, take the appropriate corrective action as soon as practicable to adjust control settings or repair equipment to reduce the 24-hour average CO emission level to 0.15 lb/MMBtu or less.

(iv) You must record the CO measurements and calculations performed according to paragraph (j)(4) of this section and any corrective actions taken. The record of corrective action taken must include the date and time during which the 24-hour average CO emission level was greater than 0.15 lb/MMBtu, and the date, time, and description of the corrective action.

(5) The affected facility uses a bag leak detection system to monitor the performance of a fabric filter (baghouse) according to the most current requirements in section § 60.48Da of this part; or

(6) The affected facility uses an ESP as the primary PM control device and uses an ESP predictive model to monitor the performance of the ESP developed in accordance and operated according to the most current requirements in section § 60.48Da of this part; or

(7) The affected facility burns only gaseous fuels or fuel oils that contain less than or equal to 0.30 weight percent sulfur and operates according to a written site-specific monitoring plan approved by the permitting authority. This monitoring plan must include procedures and criteria for establishing and monitoring specific parameters for the affected facility indicative of compliance with the opacity standard.

(k) Owners or operators complying with the PM emission limit by using a PM CEMS must calibrate, maintain, operate, and record the output of the system for PM emissions discharged to the atmosphere as specified in § 60.46b(j). The CEMS specified in paragraph § 60.46b(j) shall be operated and data recorded during all periods of operation of the affected facility except for CEMS breakdowns and repairs. Data is recorded during calibration checks, and zero and span adjustments.

(l) An owner or operator of an affected facility that is subject to an opacity standard under § 60.43b(f) is not required to operate a COMS provided that the unit burns only gaseous fuels and/or liquid fuels (excluding residue oil) with a potential SO_2 emissions rate no greater than 26 ng/J (0.060 lb/MMBtu), and the unit operates according to a written site-specific monitoring plan approved by the permitting authority is not required to operate a COMS. This monitoring plan must include procedures and criteria for establishing and monitoring specific parameters for the affected facility indicative of compliance with the opacity standard. For testing performed as part of this site-specific monitoring plan, the permitting authority may require as an alternative to the notification and reporting requirements specified in §§ 60.8 and 60.11 that the owner or operator submit any deviations with the excess emissions report required under § 60.49b(h).

[72 FR 32742, June 13, 2007, as amended at 74 FR 5087, Jan. 28, 2009; 76 FR 3523, Jan. 20, 2011; 77 FR 9460, Feb. 16, 2012]

§ 60.49b Reporting and recordkeeping requirements.

(a) The owner or operator of each affected facility shall submit notification of the date of initial startup, as provided by § 60.7. This notification shall include:

(1) The design heat input capacity of the affected facility and identification of the fuels to be combusted in the affected facility;

(2) If applicable, a copy of any federally enforceable requirement that limits the annual capacity factor for any fuel or mixture of fuels under §§ 60.42b(d)(1), 60.43b(a)(2), (a)(3)(iii), (c)(2)(ii), (d)(2)(iii), 60.44b(c), (d), (e), (i), (j), (k), 60.45b(d), (g), 60.46b(h), or 60.48b(i);

(3) The annual capacity factor at which the owner or operator anticipates operating the facility based on all fuels fired and based on each individual fuel fired; and

(4) Notification that an emerging technology will be used for controlling emissions of SO_2 . The Administrator will examine the description of the emerging technology and will determine whether the technology qualifies as an emerging technology. In making this determination, the Administrator may require the owner or operator of the affected facility to submit additional information concerning the control device. The affected facility is subject to the provisions of § 60.42b(a) unless and until this determination is made by the Administrator.

(b) The owner or operator of each affected facility subject to the SO_2 , PM, and/or NO_X emission limits under §§ 60.42b, 60.43b, and 60.44b shall submit to the Administrator the performance test data from the initial performance test and the performance evaluation of the CEMS using the applicable performance specifications in appendix B of this part. The owner or operator of each affected facility described in § 60.44b(j) or § 60.44b(k) shall submit to the Administrator the maximum heat input capacity data from the demonstration of the maximum heat input capacity of the affected facility.

(c) The owner or operator of each affected facility subject to the NO_X standard in § 60.44b who seeks to demonstrate compliance with those standards through the monitoring of steam generating unit operating conditions in the provisions of § 60.48b(g)(2) shall submit to the Administrator for approval a plan that identifies the operating conditions to be monitored in § 60.48b(g)(2) and the records to be maintained in § 60.49b(g). This plan shall be submitted to the Administrator for approval within 360 days of the initial startup of the affected facility. An affected facility burning coke oven gas alone or in combination with other gaseous fuels or distillate oil shall submit this plan to the Administrator for approval within 360 days of the initial startup of the affected facility or by November 30, 2009, whichever date comes later. If the plan is approved, the owner or operator shall maintain records of predicted nitrogen oxide emission rates and the monitored operating conditions, including steam generating unit load, identified in the plan. The plan shall:

(1) Identify the specific operating conditions to be monitored and the relationship between these operating conditions and NO_X emission rates (*i.e.* , ng/J or lbs/MMBtu heat input). Steam generating unit operating conditions include, but are not limited to, the degree of staged combustion (*i.e.* , the ratio of primary air to secondary and/or tertiary air) and the level of excess air (*i.e.* , flue gas O_2 level);

(2) Include the data and information that the owner or operator used to identify the relationship between NO_X emission rates and these operating conditions; and

(3) Identify how these operating conditions, including steam generating unit load, will be monitored under § 60.48b(g) on an hourly basis by the owner or operator during the period of operation of the affected facility; the quality assurance procedures or practices that will be employed to ensure that the data generated by monitoring these operating conditions will be representative and accurate; and the type and format of the records of these operating conditions, including steam generating unit load, that will be maintained by the owner or operator under § 60.49b(g).

(d) Except as provided in paragraph (d)(2) of this section, the owner or operator of an affected facility shall record and maintain records as specified in paragraph (d)(1) of this section.

(1) The owner or operator of an affected facility shall record and maintain records of the amounts of each fuel combusted during each day and calculate the annual capacity factor individually for coal, distillate oil, residual oil, natural gas, wood, and municipal-type solid waste for the reporting period. The annual capacity factor is determined on a 12-month rolling average basis with a new annual capacity factor calculated at the end of each calendar month.

(2) As an alternative to meeting the requirements of paragraph (d)(1) of this section, the owner or operator of an affected facility that is subject to a federally enforceable permit restricting fuel use to a single fuel such that the facility is not required to continuously monitor any emissions (excluding opacity) or parameters indicative of emissions may elect to record and maintain records of the amount of each fuel combusted during each calendar month.

(e) For an affected facility that combusts residual oil and meets the criteria under §§ 60.46b(e)(4), 60.44b(j), or (k), the owner or operator shall maintain records of the nitrogen content of the residual oil combusted in the affected facility and calculate the average fuel nitrogen content for the reporting period. The nitrogen content shall be determined using ASTM Method D4629 (incorporated by reference, see § 60.17), or fuel suppliers. If residual oil blends are being combusted, fuel nitrogen specifications may be prorated based on the ratio of residual oils of different nitrogen content in the fuel blend.

(f) For an affected facility subject to the opacity standard in § 60.43b, the owner or operator shall maintain records of opacity. In addition, an owner or operator that elects to monitor emissions according to the requirements in § 60.48b(a) shall maintain records according to the requirements specified in paragraphs (f)(1) through (3) of this section, as applicable to the visible emissions monitoring method used.

(1) For each performance test conducted using Method 9 of appendix A-4 of this part, the owner or operator shall keep the records including the information specified in paragraphs (f)(1)(i) through (iii) of this section.

(i) Dates and time intervals of all opacity observation periods;

(ii) Name, affiliation, and copy of current visible emission reading certification for each visible emission observer participating in the performance test; and

(iii) Copies of all visible emission observer opacity field data sheets;

(2) For each performance test conducted using Method 22 of appendix A-4 of this part, the owner or operator shall keep the records including the information specified in paragraphs (f)(2)(i) through (iv) of this section.

(i) Dates and time intervals of all visible emissions observation periods;

(ii) Name and affiliation for each visible emission observer participating in the performance test;

(iii) Copies of all visible emission observer opacity field data sheets; and

(iv) Documentation of any adjustments made and the time the adjustments were completed to the affected facility operation by the owner or operator to demonstrate compliance with the applicable monitoring requirements.

(3) For each digital opacity compliance system, the owner or operator shall maintain records and submit reports according to the requirements specified in the site-specific monitoring plan approved by the Administrator.

(g) Except as provided under paragraph (p) of this section, the owner or operator of an affected facility subject to the NO_X standards under § 60.44b shall maintain records of the following information for each steam generating unit operating day:

(1) Calendar date;

(2) The average hourly NO_X emission rates (expressed as NO_2) (ng/J or lb/MMBtu heat input) measured or predicted;

(3) The 30-day average NO_X emission rates (ng/J or lb/MMBtu heat input) calculated at the end of each steam generating unit operating day from the measured or predicted hourly nitrogen oxide emission rates for the preceding 30 steam generating unit operating days;

(4) Identification of the steam generating unit operating days when the calculated 30-day average NO_X emission rates are in excess of the NO_X emissions standards under § 60.44b, with the reasons for such excess emissions as well as a description of corrective actions taken;

(5) Identification of the steam generating unit operating days for which pollutant data have not been obtained, including reasons for not obtaining sufficient data and a description of corrective actions taken;

(6) Identification of the times when emission data have been excluded from the calculation of average emission rates and the reasons for excluding data;

(7) Identification of “F” factor used for calculations, method of determination, and type of fuel combusted;

(8) Identification of the times when the pollutant concentration exceeded full span of the CEMS;

(9) Description of any modifications to the CEMS that could affect the ability of the CEMS to comply with Performance Specification 2 or 3; and

(10) Results of daily CEMS drift tests and quarterly accuracy assessments as required under appendix F, Procedure 1 of this part.

(h) The owner or operator of any affected facility in any category listed in paragraphs (h)(1) or (2) of this section is required to submit excess emission reports for any excess emissions that occurred during the reporting period.

(1) Any affected facility subject to the opacity standards in § 60.43b(f) or to the operating parameter monitoring requirements in § 60.13(i)(1).

(2) Any affected facility that is subject to the NO_X standard of § 60.44b, and that:

(i) Combusts natural gas, distillate oil, gasified coal, or residual oil with a nitrogen content of 0.3 weight percent or less; or

(ii) Has a heat input capacity of 73 MW (250 MMBtu/hr) or less and is required to monitor NO_X emissions on a continuous basis under § 60.48b(g)(1) or steam generating unit operating conditions under § 60.48b(g)(2).

(3) For the purpose of § 60.43b, excess emissions are defined as all 6-minute periods during which the average opacity exceeds the opacity standards under § 60.43b(f).

(4) For purposes of § 60.48b(g)(1), excess emissions are defined as any calculated 30-day rolling average NO_X emission rate, as determined under § 60.46b(e), that exceeds the applicable emission limits in § 60.44b.

(i) The owner or operator of any affected facility subject to the continuous monitoring requirements for NO_X under § 60.48(b) shall submit reports containing the information recorded under paragraph (g) of this section.

(j) The owner or operator of any affected facility subject to the SO_2 standards under § 60.42b shall submit reports.

(k) For each affected facility subject to the compliance and performance testing requirements of § 60.45b and the reporting requirement in paragraph (j) of this section, the following information shall be reported to the Administrator:

(1) Calendar dates covered in the reporting period;

(2) Each 30-day average SO_2 emission rate (ng/J or lb/MMBtu heat input) measured during the reporting period, ending with the last 30-day period; reasons for noncompliance with the emission standards; and a description of corrective actions taken; For an exceedance due to maintenance of the SO_2 control system covered in paragraph 60.45b(a), the report shall identify the days on which the maintenance was performed and a description of the maintenance;

(3) Each 30-day average percent reduction in SO_2 emissions calculated during the reporting period, ending with the last 30-day period; reasons for noncompliance with the emission standards; and a description of corrective actions taken;

(4) Identification of the steam generating unit operating days that coal or oil was combusted and for which SO_2 or diluent (O_2 or CO_2) data have not been obtained by an approved method for at least 75 percent of the operating hours in the steam generating unit operating day; justification for not obtaining sufficient data; and description of corrective action taken;

(5) Identification of the times when emissions data have been excluded from the calculation of average emission rates; justification for excluding data; and description of corrective action taken if data have been excluded for periods other than those during which coal or oil were not combusted in the steam generating unit;

(6) Identification of “F” factor used for calculations, method of determination, and type of fuel combusted;

(7) Identification of times when hourly averages have been obtained based on manual sampling methods;

(8) Identification of the times when the pollutant concentration exceeded full span of the CEMS;

(9) Description of any modifications to the CEMS that could affect the ability of the CEMS to comply with Performance Specification 2 or 3;

(10) Results of daily CEMS drift tests and quarterly accuracy assessments as required under appendix F, Procedure 1 of this part; and

(11) The annual capacity factor of each fired as provided under paragraph (d) of this section.

(l) For each affected facility subject to the compliance and performance testing requirements of § 60.45b(d) and the reporting requirements of paragraph (j) of this section, the following information shall be reported to the Administrator:

(1) Calendar dates when the facility was in operation during the reporting period;

(2) The 24-hour average SO_2 emission rate measured for each steam generating unit operating day during the reporting period that coal or oil was combusted, ending in the last 24-hour period in the quarter; reasons for noncompliance with the emission standards; and a description of corrective actions taken;

(3) Identification of the steam generating unit operating days that coal or oil was combusted for which $S0_2$ or diluent (O_2 or CO_2) data have not been obtained by an approved method for at least 75 percent of the operating hours; justification for not obtaining sufficient data; and description of corrective action taken;

(4) Identification of the times when emissions data have been excluded from the calculation of average emission rates; justification for excluding data; and description of corrective action taken if data have been excluded for periods other than those during which coal or oil were not combusted in the steam generating unit;

(5) Identification of “F” factor used for calculations, method of determination, and type of fuel combusted;

(6) Identification of times when hourly averages have been obtained based on manual sampling methods;

(7) Identification of the times when the pollutant concentration exceeded full span of the CEMS;

(8) Description of any modifications to the CEMS that could affect the ability of the CEMS to comply with Performance Specification 2 or 3; and

(9) Results of daily CEMS drift tests and quarterly accuracy assessments as required under Procedure 1 of appendix F 1 of this part. If the owner or operator elects to implement the alternative data assessment procedures described in §§ 60.47b(e)(4)(i) through (e)(4)(iii), each data assessment report shall include a summary of the results of all of the RATAs, linearity checks, CGAs, and calibration error or drift assessments required by §§ 60.47b(e)(4)(i) through (e)(4)(iii).

(m) For each affected facility subject to the SO_2 standards in § 60.42(b) for which the minimum amount of data required in § 60.47b(c) were not obtained during the reporting period, the following information is reported to the Administrator in addition to that required under paragraph (k) of this section:

(1) The number of hourly averages available for outlet emission rates and inlet emission rates;

(2) The standard deviation of hourly averages for outlet emission rates and inlet emission rates, as determined in Method 19 of appendix A of this part, section 7;

(3) The lower confidence limit for the mean outlet emission rate and the upper confidence limit for the mean inlet emission rate, as calculated in Method 19 of appendix A of this part, section 7; and

(4) The ratio of the lower confidence limit for the mean outlet emission rate and the allowable emission rate, as determined in Method 19 of appendix A of this part, section 7.

(n) If a percent removal efficiency by fuel pretreatment (*i.e.* , $\%R_f$) is used to determine the overall percent reduction (*i.e.* , $\%R_o$) under § 60.45b, the owner or operator of the affected facility shall submit a signed statement with the report.

(1) Indicating what removal efficiency by fuel pretreatment (*i.e.* , $\%R_f$) was credited during the reporting period;

(2) Listing the quantity, heat content, and date each pre-treated fuel shipment was received during the reporting period, the name and location of the fuel pretreatment facility; and the total quantity and total heat content of all fuels received at the affected facility during the reporting period;

(3) Documenting the transport of the fuel from the fuel pretreatment facility to the steam generating unit; and

(4) Including a signed statement from the owner or operator of the fuel pretreatment facility certifying that the percent removal efficiency achieved by fuel pretreatment was determined in accordance with the provisions of Method 19 of appendix A of this part and listing the heat content and sulfur content of each fuel before and after fuel pretreatment.

(o) All records required under this section shall be maintained by the owner or operator of the affected facility for a period of 2 years following the date of such record.

(p) The owner or operator of an affected facility described in § 60.44b(j) or (k) shall maintain records of the following information for each steam generating unit operating day:

(1) Calendar date;

(2) The number of hours of operation; and

(3) A record of the hourly steam load.

(q) The owner or operator of an affected facility described in § 60.44b(j) or § 60.44b(k) shall submit to the Administrator a report containing:

(1) The annual capacity factor over the previous 12 months;

(2) The average fuel nitrogen content during the reporting period, if residual oil was fired; and

(3) If the affected facility meets the criteria described in § 60.44b(j), the results of any NO_X emission tests required during the reporting period, the hours of operation during the reporting period, and the hours of operation since the last NO_X emission test.

(r) The owner or operator of an affected facility who elects to use the fuel based compliance alternatives in § 60.42b or § 60.43b shall either:

(1) The owner or operator of an affected facility who elects to demonstrate that the affected facility combusts only very low sulfur oil, natural gas, wood, a mixture of these fuels, or any of these fuels (or a mixture of these fuels) in combination with other fuels that are known to contain an insignificant amount of sulfur in § 60.42b(j) or § 60.42b(k) shall obtain and maintain at the affected facility fuel receipts (such as a current, valid purchase contract, tariff sheet, or transportation contract) from the fuel supplier that certify that the oil meets the definition of distillate oil and gaseous fuel meets the definition of natural gas as defined in § 60.41b and the applicable sulfur limit. For the purposes of this section, the distillate oil need not meet the fuel nitrogen content specification in the definition of distillate oil. Reports shall be submitted to the Administrator certifying that only very low sulfur oil meeting this

definition, natural gas, wood, and/or other fuels that are known to contain insignificant amounts of sulfur were combusted in the affected facility during the reporting period; or

(2) The owner or operator of an affected facility who elects to demonstrate compliance based on fuel analysis in § 60.42b or § 60.43b shall develop and submit a site-specific fuel analysis plan to the Administrator for review and approval no later than 60 days before the date you intend to demonstrate compliance. Each fuel analysis plan shall include a minimum initial requirement of weekly testing and each analysis report shall contain, at a minimum, the following information:

(i) The potential sulfur emissions rate of the representative fuel mixture in ng/J heat input;

(ii) The method used to determine the potential sulfur emissions rate of each constituent of the mixture. For distillate oil and natural gas a fuel receipt or tariff sheet is acceptable;

(iii) The ratio of different fuels in the mixture; and

(iv) The owner or operator can petition the Administrator to approve monthly or quarterly sampling in place of weekly sampling.

(s) Facility specific NO_X standard for Cytec Industries Fortier Plant's C.AOG incinerator located in Westwego, Louisiana:

(1) *Definitions* .

Oxidation zone is defined as the portion of the C.AOG incinerator that extends from the inlet of the oxidizing zone combustion air to the outlet gas stack.

Reducing zone is defined as the portion of the C.AOG incinerator that extends from the burner section to the inlet of the oxidizing zone combustion air.

Total inlet air is defined as the total amount of air introduced into the C.AOG incinerator for combustion of natural gas and chemical by-product waste and is equal to the sum of the air flow into the reducing zone and the air flow into the oxidation zone.

(2) *Standard for nitrogen oxides* . (i) When fossil fuel alone is combusted, the NO_X emission limit for fossil fuel in § 60.44b(a) applies.

(ii) When natural gas and chemical by-product waste are simultaneously combusted, the NO_X emission limit is 289 ng/J (0.67 lb/MMBtu) and a maximum of 81 percent of the total inlet air provided for combustion shall be provided to the reducing zone of the C.AOG incinerator.

(3) *Emission monitoring* . (i) The percent of total inlet air provided to the reducing zone shall be determined at least every 15 minutes by measuring the air flow of all the air entering the reducing zone and the air flow of all the air entering the oxidation zone, and compliance with the percentage of total inlet air that is provided to the reducing zone shall be determined on a 3-hour average basis.

(ii) The NO_X emission limit shall be determined by the compliance and performance test methods and procedures for NO_X in § 60.46b(i).

(iii) The monitoring of the NO_X emission limit shall be performed in accordance with § 60.48b.

(4) *Reporting and recordkeeping requirements* . (i) The owner or operator of the C.AOG incinerator shall submit a report on any excursions from the limits required by paragraph (a)(2) of this section to the Administrator with the quarterly report required by paragraph (i) of this section.

(ii) The owner or operator of the C.AOG incinerator shall keep records of the monitoring required by paragraph (a)(3) of this section for a period of 2 years following the date of such record.

(iii) The owner of operator of the C.AOG incinerator shall perform all the applicable reporting and recordkeeping requirements of this section.

(t) Facility-specific NO_X standard for Rohm and Haas Kentucky Incorporated's Boiler No. 100 located in Louisville, Kentucky:

(1) *Definitions* .

Air ratio control damper is defined as the part of the low NO_X burner that is adjusted to control the split of total combustion air delivered to the reducing and oxidation portions of the combustion flame.

Flue gas recirculation line is defined as the part of Boiler No. 100 that recirculates a portion of the boiler flue gas back into the combustion air.

(2) *Standard for nitrogen oxides* . (i) When fossil fuel alone is combusted, the NO_X emission limit for fossil fuel in § 60.44b(a) applies.

(ii) When fossil fuel and chemical by-product waste are simultaneously combusted, the NO_X emission limit is 473 ng/J (1.1 lb/MMBtu), and the air ratio control damper tee handle shall be at a minimum of 5 inches (12.7 centimeters) out of the boiler, and the flue gas recirculation line shall be operated at a minimum of 10 percent open as indicated by its valve opening position indicator.

(3) *Emission monitoring for nitrogen oxides* . (i) The air ratio control damper tee handle setting and the flue gas recirculation line valve opening position indicator setting shall be recorded during each 8-hour operating shift.

(ii) The NO_X emission limit shall be determined by the compliance and performance test methods and procedures for NO_X in § 60.46b.

(iii) The monitoring of the NO_X emission limit shall be performed in accordance with § 60.48b.

(4) *Reporting and recordkeeping requirements* . (i) The owner or operator of Boiler No. 100 shall submit a report on any excursions from the limits required by paragraph (b)(2) of this section to the Administrator with the quarterly report required by § 60.49b(i).

(ii) The owner or operator of Boiler No. 100 shall keep records of the monitoring required by paragraph (b)(3) of this section for a period of 2 years following the date of such record.

(iii) The owner of operator of Boiler No. 100 shall perform all the applicable reporting and recordkeeping requirements of § 60.49b.

(u) *Site-specific standard for Merck & Co., Inc.'s Stonewall Plant in Elkton, Virginia* . (1) This paragraph (u) applies only to the pharmaceutical manufacturing facility, commonly referred to as the Stonewall Plant, located at Route 340 South, in Elkton, Virginia (“site”) and only to the natural gas-fired boilers installed as part of the powerhouse conversion required pursuant to 40 CFR 52.2454(g). The requirements of this paragraph shall apply, and the requirements of §§ 60.40b through 60.49b(t) shall not apply, to the natural gas-fired boilers installed pursuant to 40 CFR 52.2454(g).

(i) The site shall equip the natural gas-fired boilers with low NO_X technology.

(ii) The site shall install, calibrate, maintain, and operate a continuous monitoring and recording system for measuring NO_X emissions discharged to the atmosphere and opacity using a continuous emissions monitoring system or a predictive emissions monitoring system.

(iii) Within 180 days of the completion of the powerhouse conversion, as required by 40 CFR 52.2454, the site shall perform a performance test to quantify criteria pollutant emissions.

(2) [Reserved]

(v) The owner or operator of an affected facility may submit electronic quarterly reports for SO_2 and/or NO_X and/or opacity in lieu of submitting the written reports required under paragraphs (h), (i), (j), (k) or (l) of this section. The format of each quarterly electronic report shall be coordinated with the permitting authority. The electronic report(s) shall be submitted no later than 30 days after the end of the calendar quarter and shall be accompanied by a certification statement from the owner or operator, indicating whether compliance with the applicable emission standards and minimum data requirements of this subpart was achieved during the reporting period. Before submitting reports in the electronic format, the owner or operator shall coordinate with the permitting authority to obtain their agreement to submit reports in this alternative format.

(w) The reporting period for the reports required under this subpart is each 6 month period. All reports shall be submitted to the Administrator and shall be postmarked by the 30th day following the end of the reporting period.

(x) Facility-specific NO_X standard for Weyerhaeuser Company's No. 2 Power Boiler located in New Bern, North Carolina:

(1) *Standard for nitrogen oxides* . (i) When fossil fuel alone is combusted, the NO_X emission limit for fossil fuel in § 60.44b(a) applies.

(ii) When fossil fuel and chemical by-product waste are simultaneously combusted, the NO_X emission limit is 215 ng/J (0.5 lb/MMBtu).

(2) *Emission monitoring for nitrogen oxides* . (i) The NO_X emissions shall be determined by the compliance and performance test methods and procedures for NO_X in § 60.46b.

(ii) The monitoring of the NO_X emissions shall be performed in accordance with § 60.48b.

(3) *Reporting and recordkeeping requirements* . (i) The owner or operator of the No. 2 Power Boiler shall submit a report on any excursions from the limits required by paragraph (x)(2) of this section to the Administrator with the quarterly report required by § 60.49b(i).

(ii) The owner or operator of the No. 2 Power Boiler shall keep records of the monitoring required by paragraph (x)(3) of this section for a period of 2 years following the date of such record.

(iii) The owner or operator of the No. 2 Power Boiler shall perform all the applicable reporting and recordkeeping requirements of § 60.49b.

(y) Facility-specific NO_X standard for INEOS USA's AOGI located in Lima, Ohio:

(1) *Standard for* NO_X . (i) When fossil fuel alone is combusted, the NO_X emission limit for fossil fuel in § 60.44b(a) applies.

(ii) When fossil fuel and chemical byproduct/waste are simultaneously combusted, the NO_X emission limit is 645 ng/J (1.5 lb/MMBtu).

(2) *Emission monitoring for* NO_X . (i) The NO_X emissions shall be determined by the compliance and performance test methods and procedures for NO_X in § 60.46b.

(ii) The monitoring of the NO_X emissions shall be performed in accordance with § 60.48b.

(3) *Reporting and recordkeeping requirements* . (i) The owner or operator of the AOGI shall submit a report on any excursions from the limits required by paragraph (y)(2) of this section to the Administrator with the quarterly report required by paragraph (i) of this section.

(ii) The owner or operator of the AOGI shall keep records of the monitoring required by paragraph (y)(3) of this section for a period of 2 years following the date of such record.

(iii) The owner or operator of the AOGI shall perform all the applicable reporting and recordkeeping requirements of this section.

[72 FR 32742, June 13, 2007, as amended at 74 FR 5089, Jan. 28, 2009; 77 FR 9461, Feb. 16, 2012]

Attachment F
To Part 70 Operating Permit Renewal No. T089-29907-00121

[Downloaded from the eCFR on May 13, 2013]

Electronic Code of Federal Regulations

Title 40: Protection of Environment

Part 60, Subpart IIII—Standards of Performance for Stationary Compression Ignition Internal Combustion Engines

Source: 71 FR 39172, July 11, 2006, unless otherwise noted.

What This Subpart Covers

§ 60.4200 Am I subject to this subpart?

(a) The provisions of this subpart are applicable to manufacturers, owners, and operators of stationary compression ignition (CI) internal combustion engines (ICE) and other persons as specified in paragraphs (a)(1) through (4) of this section. For the purposes of this subpart, the date that construction commences is the date the engine is ordered by the owner or operator.

(1) Manufacturers of stationary CI ICE with a displacement of less than 30 liters per cylinder where the model year is:

(i) 2007 or later, for engines that are not fire pump engines;

(ii) The model year listed in Table 3 to this subpart or later model year, for fire pump engines.

(2) Owners and operators of stationary CI ICE that commence construction after July 11, 2005, where the stationary CI ICE are:

(i) Manufactured after April 1, 2006, and are not fire pump engines, or

(ii) Manufactured as a certified National Fire Protection Association (NFPA) fire pump engine after July 1, 2006.

(3) Owners and operators of any stationary CI ICE that are modified or reconstructed after July 11, 2005 and any person that modifies or reconstructs any stationary CI ICE after July 11, 2005.

(4) The provisions of § 60.4208 of this subpart are applicable to all owners and operators of stationary CI ICE that commence construction after July 11, 2005.

(b) The provisions of this subpart are not applicable to stationary CI ICE being tested at a stationary CI ICE test cell/stand.

(c) If you are an owner or operator of an area source subject to this subpart, you are exempt from the obligation to obtain a permit under 40 CFR part 70 or 40 CFR part 71, provided you are not required to obtain a permit under 40 CFR 70.3(a) or 40 CFR 71.3(a) for a reason other than your status as an area source under this subpart. Notwithstanding the previous sentence, you must continue to comply with the provisions of this subpart applicable to area sources.

(d) Stationary CI ICE may be eligible for exemption from the requirements of this subpart as described in 40 CFR part 1068, subpart C (or the exemptions described in 40 CFR part 89, subpart J and 40 CFR part 94, subpart J, for engines that would need to be certified to standards in those parts), except that owners and operators, as well as manufacturers, may be eligible to request an exemption for national security.

(e) Owners and operators of facilities with CI ICE that are acting as temporary replacement units and that are located at a stationary source for less than 1 year and that have been properly certified as meeting the standards that would be applicable to such engine under the appropriate nonroad engine provisions, are not required to meet any other provisions under this subpart with regard to such engines.

[71 FR 39172, July 11, 2006, as amended at 76 FR 37967, June 28, 2011]

Emission Standards for Manufacturers

§ 60.4201 What emission standards must I meet for non-emergency engines if I am a stationary CI internal combustion engine manufacturer?

(a) Stationary CI internal combustion engine manufacturers must certify their 2007 model year and later non-emergency stationary CI ICE with a maximum engine power less than or equal to 2,237 kilowatt (KW) (3,000 horsepower (HP)) and a displacement of less than 10 liters per cylinder to the certification emission standards for new nonroad CI engines in 40 CFR 89.112, 40 CFR 89.113, 40 CFR 1039.101, 40 CFR 1039.102, 40 CFR 1039.104, 40 CFR 1039.105, 40 CFR 1039.107, and 40 CFR 1039.115, as applicable, for all pollutants, for the same model year and maximum engine power.

(b) Stationary CI internal combustion engine manufacturers must certify their 2007 through 2010 model year non-emergency stationary CI ICE with a maximum engine power greater than 2,237 KW (3,000 HP) and a displacement of less than 10 liters per cylinder to the emission standards in table 1 to this subpart, for all pollutants, for the same maximum engine power.

(c) Stationary CI internal combustion engine manufacturers must certify their 2011 model year and later non-emergency stationary CI ICE with a maximum engine power greater than 2,237 KW (3,000 HP) and a displacement of less than 10 liters per cylinder to the certification emission standards for new nonroad CI engines in 40 CFR 1039.101, 40 CFR 1039.102, 40 CFR 1039.104, 40 CFR 1039.105, 40 CFR 1039.107, and 40 CFR 1039.115, as applicable, for all pollutants, for the same maximum engine power.

(d) Stationary CI internal combustion engine manufacturers must certify the following non-emergency stationary CI ICE to the certification emission standards for new marine CI engines in 40 CFR 94.8, as applicable, for all pollutants, for the same displacement and maximum engine power:

(1) Their 2007 model year through 2012 non-emergency stationary CI ICE with a displacement of greater than or equal to 10 liters per cylinder and less than 30 liters per cylinder;

(2) Their 2013 model year non-emergency stationary CI ICE with a maximum engine power greater than or equal to 3,700 KW (4,958 HP) and a displacement of greater than or equal to 10 liters per cylinder and less than 15 liters per cylinder; and

(3) Their 2013 model year non-emergency stationary CI ICE with a displacement of greater than or equal to 15 liters per cylinder and less than 30 liters per cylinder.

(e) Stationary CI internal combustion engine manufacturers must certify the following non-emergency stationary CI ICE to the certification emission standards and other requirements for new marine CI engines in 40 CFR 1042.101, 40 CFR 1042.107, 40 CFR 1042.110, 40 CFR 1042.115, 40 CFR 1042.120, and 40 CFR 1042.145, as applicable, for all pollutants, for the same displacement and maximum engine power:

(1) Their 2013 model year non-emergency stationary CI ICE with a maximum engine power less than 3,700 KW (4,958 HP) and a displacement of greater than or equal to 10 liters per cylinder and less than 15 liters per cylinder; and

(2) Their 2014 model year and later non-emergency stationary CI ICE with a displacement of greater than or equal to 10 liters per cylinder and less than 30 liters per cylinder.

(f) Notwithstanding the requirements in paragraphs (a) through (c) of this section, stationary non-emergency CI ICE identified in paragraphs (a) and (c) may be certified to the provisions of 40 CFR part 94 or, if Table 1 to 40 CFR 1042.1 identifies 40 CFR part 1042 as being applicable, 40 CFR part 1042, if the engines will be used solely in either or both of the following locations:

(1) Areas of Alaska not accessible by the Federal Aid Highway System (FAHS); and

(2) Marine offshore installations.

(g) Notwithstanding the requirements in paragraphs (a) through (f) of this section, stationary CI internal combustion engine manufacturers are not required to certify reconstructed engines; however manufacturers may elect to do so. The reconstructed engine must be certified to the emission standards specified in paragraphs (a) through (e) of this section that are applicable to the model year, maximum engine power, and displacement of the reconstructed stationary CI ICE.

[71 FR 39172, July 11, 2006, as amended at 76 FR 37967, June 28, 2011]

§ 60.4202 What emission standards must I meet for emergency engines if I am a stationary CI internal combustion engine manufacturer?

(a) Stationary CI internal combustion engine manufacturers must certify their 2007 model year and later emergency stationary CI ICE with a maximum engine power less than or equal to 2,237 KW (3,000 HP) and a displacement of less than 10 liters per cylinder that are not fire pump engines to the emission standards specified in paragraphs (a)(1) through (2) of this section.

(1) For engines with a maximum engine power less than 37 KW (50 HP):

(i) The certification emission standards for new nonroad CI engines for the same model year and maximum engine power in 40 CFR 89.112 and 40 CFR 89.113 for all pollutants for model year 2007 engines, and

(ii) The certification emission standards for new nonroad CI engines in 40 CFR 1039.104, 40 CFR 1039.105, 40 CFR 1039.107, 40 CFR 1039.115, and table 2 to this subpart, for 2008 model year and later engines.

(2) For engines with a maximum engine power greater than or equal to 37 KW (50 HP), the certification emission standards for new nonroad CI engines for the same model year and maximum engine power in 40 CFR 89.112 and 40 CFR 89.113 for all pollutants beginning in model year 2007.

(b) Stationary CI internal combustion engine manufacturers must certify their 2007 model year and later emergency stationary CI ICE with a maximum engine power greater than 2,237 KW (3,000 HP) and a displacement of less than 10 liters per cylinder that are not fire pump engines to the emission standards specified in paragraphs (b)(1) through (2) of this section.

(1) For 2007 through 2010 model years, the emission standards in table 1 to this subpart, for all pollutants, for the same maximum engine power.

(2) For 2011 model year and later, the certification emission standards for new nonroad CI engines for engines of the same model year and maximum engine power in 40 CFR 89.112 and 40 CFR 89.113 for all pollutants.

(c) [Reserved]

(d) Beginning with the model years in table 3 to this subpart, stationary CI internal combustion engine manufacturers must certify their fire pump stationary CI ICE to the emission standards in table 4 to this subpart, for all pollutants, for the same model year and NFPA nameplate power.

(e) Stationary CI internal combustion engine manufacturers must certify the following emergency stationary CI ICE that are not fire pump engines to the certification emission standards for new marine CI engines in 40 CFR 94.8, as applicable, for all pollutants, for the same displacement and maximum engine power:

(1) Their 2007 model year through 2012 emergency stationary CI ICE with a displacement of greater than or equal to 10 liters per cylinder and less than 30 liters per cylinder;

(2) Their 2013 model year and later emergency stationary CI ICE with a maximum engine power greater than or equal to 3,700 KW (4,958 HP) and a displacement of greater than or equal to 10 liters per cylinder and less than 15 liters per cylinder;

(3) Their 2013 model year emergency stationary CI ICE with a displacement of greater than or equal to 15 liters per cylinder and less than 30 liters per cylinder; and

(4) Their 2014 model year and later emergency stationary CI ICE with a maximum engine power greater than or equal to 2,000 KW (2,682 HP) and a displacement of greater than or equal to 15 liters per cylinder and less than 30 liters per cylinder.

(f) Stationary CI internal combustion engine manufacturers must certify the following emergency stationary CI ICE to the certification emission standards and other requirements applicable to Tier 3 new marine CI engines in 40 CFR 1042.101, 40 CFR 1042.107, 40 CFR 1042.115, 40 CFR 1042.120, and 40 CFR 1042.145, for all pollutants, for the same displacement and maximum engine power:

(1) Their 2013 model year and later emergency stationary CI ICE with a maximum engine power less than 3,700 KW (4,958 HP) and a displacement of greater than or equal to 10 liters per cylinder and less than 15 liters per cylinder; and

(2) Their 2014 model year and later emergency stationary CI ICE with a maximum engine power less than 2,000 KW (2,682 HP) and a displacement of greater than or equal to 15 liters per cylinder and less than 30 liters per cylinder.

(g) Notwithstanding the requirements in paragraphs (a) through (d) of this section, stationary emergency CI internal combustion engines identified in paragraphs (a) and (c) may be certified to the provisions of 40 CFR part 94 or, if Table 2 to 40 CFR 1042.101 identifies Tier 3 standards as being applicable, the requirements applicable to Tier 3 engines in 40 CFR part 1042, if the engines will be used solely in either or both of the following locations:

(1) Areas of Alaska not accessible by the FAHS; and

(2) Marine offshore installations.

(h) Notwithstanding the requirements in paragraphs (a) through (f) of this section, stationary CI internal combustion engine manufacturers are not required to certify reconstructed engines; however manufacturers may elect to do so. The reconstructed engine must be certified to the emission standards specified in paragraphs (a) through (f) of this section that are applicable to the model year, maximum engine power and displacement of the reconstructed emergency stationary CI ICE.

[71 FR 39172, July 11, 2006, as amended at 76 FR 37968, June 28, 2011]

§ 60.4203 How long must my engines meet the emission standards if I am a manufacturer of stationary CI internal combustion engines?

Engines manufactured by stationary CI internal combustion engine manufacturers must meet the emission standards as required in §§ 60.4201 and 60.4202 during the certified emissions life of the engines.

[76 FR 37968, June 28, 2011]

Emission Standards for Owners and Operators

§ 60.4204 What emission standards must I meet for non-emergency engines if I am an owner or operator of a stationary CI internal combustion engine?

(a) Owners and operators of pre-2007 model year non-emergency stationary CI ICE with a displacement of less than 10 liters per cylinder must comply with the emission standards in table 1 to this subpart. Owners and operators of pre-2007 model year non-emergency stationary CI ICE with a displacement of greater than or equal to 10 liters per cylinder and less than 30 liters per cylinder must comply with the emission standards in 40 CFR 94.8(a)(1).

(b) Owners and operators of 2007 model year and later non-emergency stationary CI ICE with a displacement of less than 30 liters per cylinder must comply with the emission standards for new CI engines in § 60.4201 for their 2007 model year and later stationary CI ICE, as applicable.

(c) Owners and operators of non-emergency stationary CI engines with a displacement of greater than or equal to 30 liters per cylinder must meet the following requirements:

(1) For engines installed prior to January 1, 2012, limit the emissions of NOX in the stationary CI internal combustion engine exhaust to the following:

(i) 17.0 grams per kilowatt-hour (g/KW-hr) (12.7 grams per horsepower-hr (g/HP-hr)) when maximum engine speed is less than 130 revolutions per minute (rpm);

(ii) $45 \cdot n^{-0.2}$ g/KW-hr ($34 \cdot n^{-0.2}$ g/HP-hr) when maximum engine speed is 130 or more but less than 2,000 rpm, where n is maximum engine speed; and

(iii) 9.8 g/KW-hr (7.3 g/HP-hr) when maximum engine speed is 2,000 rpm or more.

(2) For engines installed on or after January 1, 2012 and before January 1, 2016, limit the emissions of NOX in the stationary CI internal combustion engine exhaust to the following:

(i) 14.4 g/KW-hr (10.7 g/HP-hr) when maximum engine speed is less than 130 rpm;

(ii) $44 \cdot n^{-0.23}$ g/KW-hr ($33 \cdot n^{-0.23}$ g/HP-hr) when maximum engine speed is greater than or equal to 130 but less than 2,000 rpm and where n is maximum engine speed; and

(iii) 7.7 g/KW-hr (5.7 g/HP-hr) when maximum engine speed is greater than or equal to 2,000 rpm.

(3) For engines installed on or after January 1, 2016, limit the emissions of NOX in the stationary CI internal combustion engine exhaust to the following:

(i) 3.4 g/KW-hr (2.5 g/HP-hr) when maximum engine speed is less than 130 rpm;

(ii) $9.0 \cdot n^{-0.20}$ g/KW-hr ($6.7 \cdot n^{-0.20}$ g/HP-hr) where n (maximum engine speed) is 130 or more but less than 2,000 rpm; and

(iii) 2.0 g/KW-hr (1.5 g/HP-hr) where maximum engine speed is greater than or equal to 2,000 rpm.

(4) Reduce particulate matter (PM) emissions by 60 percent or more, or limit the emissions of PM in the stationary CI internal combustion engine exhaust to 0.15 g/KW-hr (0.11 g/HP-hr).

(d) Owners and operators of non-emergency stationary CI ICE with a displacement of less than 30 liters per cylinder who conduct performance tests in-use must meet the not-to-exceed (NTE) standards as indicated in § 60.4212.

(e) Owners and operators of any modified or reconstructed non-emergency stationary CI ICE subject to this subpart must meet the emission standards applicable to the model year, maximum engine power, and displacement of the modified or reconstructed non-emergency stationary CI ICE that are specified in paragraphs (a) through (d) of this section.

[71 FR 39172, July 11, 2006, as amended at 76 FR 37968, June 28, 2011]

§ 60.4205 What emission standards must I meet for emergency engines if I am an owner or operator of a stationary CI internal combustion engine?

(a) Owners and operators of pre-2007 model year emergency stationary CI ICE with a displacement of less than 10 liters per cylinder that are not fire pump engines must comply with the emission standards in Table 1 to this subpart. Owners and operators of pre-2007 model year emergency stationary CI ICE with a displacement of greater than or equal to 10 liters per cylinder and less than 30 liters per cylinder that are not fire pump engines must comply with the emission standards in 40 CFR 94.8(a)(1).

(b) Owners and operators of 2007 model year and later emergency stationary CI ICE with a displacement of less than 30 liters per cylinder that are not fire pump engines must comply with the emission standards for new nonroad CI engines in § 60.4202, for all pollutants, for the same model year and maximum engine power for their 2007 model year and later emergency stationary CI ICE.

(c) Owners and operators of fire pump engines with a displacement of less than 30 liters per cylinder must comply with the emission standards in table 4 to this subpart, for all pollutants.

(d) Owners and operators of emergency stationary CI engines with a displacement of greater than or equal to 30 liters per cylinder must meet the requirements in this section.

(1) For engines installed prior to January 1, 2012, limit the emissions of NOX in the stationary CI internal combustion engine exhaust to the following:

(i) 17.0 g/KW-hr (12.7 g/HP-hr) when maximum engine speed is less than 130 rpm;

(ii) $45 \cdot n^{-0.2}$ g/KW-hr ($34 \cdot n^{-0.2}$ g/HP-hr) when maximum engine speed is 130 or more but less than 2,000 rpm, where n is maximum engine speed; and

(iii) 9.8 g/kW-hr (7.3 g/HP-hr) when maximum engine speed is 2,000 rpm or more.

(2) For engines installed on or after January 1, 2012, limit the emissions of NOX in the stationary CI internal combustion engine exhaust to the following:

(i) 14.4 g/KW-hr (10.7 g/HP-hr) when maximum engine speed is less than 130 rpm;

(ii) $44 \cdot n^{-0.23}$ g/KW-hr ($33 \cdot n^{-0.23}$ g/HP-hr) when maximum engine speed is greater than or equal to 130 but less than 2,000 rpm and where n is maximum engine speed; and

(iii) 7.7 g/KW-hr (5.7 g/HP-hr) when maximum engine speed is greater than or equal to 2,000 rpm.

(3) Limit the emissions of PM in the stationary CI internal combustion engine exhaust to 0.40 g/KW-hr (0.30 g/HP-hr).

(e) Owners and operators of emergency stationary CI ICE with a displacement of less than 30 liters per cylinder who conduct performance tests in-use must meet the NTE standards as indicated in § 60.4212.

(f) Owners and operators of any modified or reconstructed emergency stationary CI ICE subject to this subpart must meet the emission standards applicable to the model year, maximum engine power, and displacement of the modified or reconstructed CI ICE that are specified in paragraphs (a) through (e) of this section.

[71 FR 39172, July 11, 2006, as amended at 76 FR 37969, June 28, 2011]

§ 60.4206 How long must I meet the emission standards if I am an owner or operator of a stationary CI internal combustion engine?

Owners and operators of stationary CI ICE must operate and maintain stationary CI ICE that achieve the emission standards as required in §§ 60.4204 and 60.4205 over the entire life of the engine.

[76 FR 37969, June 28, 2011]

Fuel Requirements for Owners and Operators

§ 60.4207 What fuel requirements must I meet if I am an owner or operator of a stationary CI internal combustion engine subject to this subpart?

(a) Beginning October 1, 2007, owners and operators of stationary CI ICE subject to this subpart that use diesel fuel must use diesel fuel that meets the requirements of 40 CFR 80.510(a).

(b) Beginning October 1, 2010, owners and operators of stationary CI ICE subject to this subpart with a displacement of less than 30 liters per cylinder that use diesel fuel must use diesel fuel that meets the requirements of 40 CFR 80.510(b) for nonroad diesel fuel, except that any existing diesel fuel purchased (or otherwise obtained) prior to October 1, 2010, may be used until depleted.

(c) [Reserved]

(d) Beginning June 1, 2012, owners and operators of stationary CI ICE subject to this subpart with a displacement of greater than or equal to 30 liters per cylinder are no longer subject to the requirements of paragraph (a) of this section, and must use fuel that meets a maximum per-gallon sulfur content of 1,000 parts per million (ppm).

(e) Stationary CI ICE that have a national security exemption under § 60.4200(d) are also exempt from the fuel requirements in this section.

[71 FR 39172, July 11, 2006, as amended at 76 FR 37969, June 28, 2011; 78 FR 6695, Jan. 30, 2013]

Other Requirements for Owners and Operators

§ 60.4208 What is the deadline for importing or installing stationary CI ICE produced in previous model years?

(a) After December 31, 2008, owners and operators may not install stationary CI ICE (excluding fire pump engines) that do not meet the applicable requirements for 2007 model year engines.

(b) After December 31, 2009, owners and operators may not install stationary CI ICE with a maximum engine power of less than 19 KW (25 HP) (excluding fire pump engines) that do not meet the applicable requirements for 2008 model year engines.

(c) After December 31, 2014, owners and operators may not install non-emergency stationary CI ICE with a maximum engine power of greater than or equal to 19 KW (25 HP) and less than 56 KW (75 HP) that do not meet the applicable requirements for 2013 model year non-emergency engines.

(d) After December 31, 2013, owners and operators may not install non-emergency stationary CI ICE with a maximum engine power of greater than or equal to 56 KW (75 HP) and less than 130 KW (175 HP) that do not meet the applicable requirements for 2012 model year non-emergency engines.

(e) After December 31, 2012, owners and operators may not install non-emergency stationary CI ICE with a maximum engine power of greater than or equal to 130 KW (175 HP), including those above 560 KW (750 HP), that do not meet the applicable requirements for 2011 model year non-emergency engines.

(f) After December 31, 2016, owners and operators may not install non-emergency stationary CI ICE with a maximum engine power of greater than or equal to 560 KW (750 HP) that do not meet the applicable requirements for 2015 model year non-emergency engines.

(g) After December 31, 2018, owners and operators may not install non-emergency stationary CI ICE with a maximum engine power greater than or equal to 600 KW (804 HP) and less than 2,000 KW (2,680 HP) and a displacement of greater than or equal to 10 liters per cylinder and less than 30 liters per cylinder that do not meet the applicable requirements for 2017 model year non-emergency engines.

(h) In addition to the requirements specified in §§ 60.4201, 60.4202, 60.4204, and 60.4205, it is prohibited to import stationary CI ICE with a displacement of less than 30 liters per cylinder that do not meet the applicable requirements specified in paragraphs (a) through (g) of this section after the dates specified in paragraphs (a) through (g) of this section.

(i) The requirements of this section do not apply to owners or operators of stationary CI ICE that have been modified, reconstructed, and do not apply to engines that were removed from one existing location and reinstalled at a new location.

[71 FR 39172, July 11, 2006, as amended at 76 FR 37969, June 28, 2011]

§ 60.4209 What are the monitoring requirements if I am an owner or operator of a stationary CI internal combustion engine?

If you are an owner or operator, you must meet the monitoring requirements of this section. In addition, you must also meet the monitoring requirements specified in § 60.4211.

(a) If you are an owner or operator of an emergency stationary CI internal combustion engine that does not meet the standards applicable to non-emergency engines, you must install a non-resettable hour meter prior to startup of the engine.

(b) If you are an owner or operator of a stationary CI internal combustion engine equipped with a diesel particulate filter to comply with the emission standards in § 60.4204, the diesel particulate filter must be installed with a backpressure monitor that notifies the owner or operator when the high backpressure limit of the engine is approached.

[71 FR 39172, July 11, 2006, as amended at 76 FR 37969, June 28, 2011]

Compliance Requirements

§ 60.4210 What are my compliance requirements if I am a stationary CI internal combustion engine manufacturer?

(a) Stationary CI internal combustion engine manufacturers must certify their stationary CI ICE with a displacement of less than 10 liters per cylinder to the emission standards specified in § 60.4201(a) through (c) and § 60.4202(a), (b) and (d) using the certification procedures required in 40 CFR part 89, subpart B, or 40 CFR part 1039, subpart C, as applicable, and must test their engines as specified in those parts. For the purposes of this subpart, engines certified to the standards in table 1 to this subpart shall be subject to the same requirements as engines certified to the standards in 40 CFR part 89. For the purposes of this subpart, engines certified to the standards in table 4 to this subpart shall be subject to the same requirements as engines certified to the standards in 40 CFR part 89, except that engines with NFPA nameplate power of less than 37 KW (50 HP) certified to model year 2011 or later standards shall be subject to the same requirements as engines certified to the standards in 40 CFR part 1039.

(b) Stationary CI internal combustion engine manufacturers must certify their stationary CI ICE with a displacement of greater than or equal to 10 liters per cylinder and less than 30 liters per cylinder to the emission standards specified in § 60.4201(d) and (e) and § 60.4202(e) and (f) using the certification procedures required in 40 CFR part 94, subpart C, or 40 CFR part 1042, subpart C, as applicable, and must test their engines as specified in 40 CFR part 94 or 1042, as applicable.

(c) Stationary CI internal combustion engine manufacturers must meet the requirements of 40 CFR 1039.120, 1039.125, 1039.130, and 1039.135, and 40 CFR part 1068 for engines that are certified to the emission standards in 40 CFR part 1039. Stationary CI internal combustion engine manufacturers must meet the corresponding provisions of 40 CFR part 89, 40 CFR part 94 or 40 CFR part 1042 for engines that would be covered by that part if they were nonroad (including marine) engines. Labels on such engines must refer to stationary engines, rather than or in addition to nonroad or marine engines, as appropriate. Stationary CI internal combustion engine manufacturers must label their engines according to paragraphs (c)(1) through (3) of this section.

(1) Stationary CI internal combustion engines manufactured from January 1, 2006 to March 31, 2006 (January 1, 2006 to June 30, 2006 for fire pump engines), other than those that are part of certified engine families under the nonroad CI engine regulations, must be labeled according to 40 CFR 1039.20.

(2) Stationary CI internal combustion engines manufactured from April 1, 2006 to December 31, 2006 (or, for fire pump engines, July 1, 2006 to December 31 of the year preceding the year listed in table 3 to this subpart) must be labeled according to paragraphs (c)(2)(i) through (iii) of this section:

(i) Stationary CI internal combustion engines that are part of certified engine families under the nonroad regulations must meet the labeling requirements for nonroad CI engines, but do not have to meet the labeling requirements in 40 CFR 1039.20.

(ii) Stationary CI internal combustion engines that meet Tier 1 requirements (or requirements for fire pumps) under this subpart, but do not meet the requirements applicable to nonroad CI engines must be labeled according to 40 CFR 1039.20. The engine manufacturer may add language to the label clarifying that the engine meets Tier 1 requirements (or requirements for fire pumps) of this subpart.

(iii) Stationary CI internal combustion engines manufactured after April 1, 2006 that do not meet Tier 1 requirements of this subpart, or fire pumps engines manufactured after July 1, 2006 that do not meet the requirements for fire pumps under this subpart, may not be used in the U.S. If any such engines are manufactured in the U.S. after April 1, 2006 (July 1, 2006 for fire pump engines), they must be exported or must be brought into compliance with the appropriate standards prior to initial operation. The export provisions of 40 CFR 1068.230 would apply to engines for export and the manufacturers must label such engines according to 40 CFR 1068.230.

(3) Stationary CI internal combustion engines manufactured after January 1, 2007 (for fire pump engines, after January 1 of the year listed in table 3 to this subpart, as applicable) must be labeled according to paragraphs (c)(3)(i) through (iii) of this section.

(i) Stationary CI internal combustion engines that meet the requirements of this subpart and the corresponding requirements for nonroad (including marine) engines of the same model year and HP must be labeled according to the provisions in 40 CFR parts 89, 94, 1039 or 1042, as appropriate.

(ii) Stationary CI internal combustion engines that meet the requirements of this subpart, but are not certified to the standards applicable to nonroad (including marine) engines of the same model year and HP must be labeled according to the provisions in 40 CFR parts 89, 94, 1039 or 1042, as appropriate, but the words “stationary” must be included instead of “nonroad” or “marine” on the label. In addition, such engines must be labeled according to 40 CFR 1039.20.

(iii) Stationary CI internal combustion engines that do not meet the requirements of this subpart must be labeled according to 40 CFR 1068.230 and must be exported under the provisions of 40 CFR 1068.230.

(d) An engine manufacturer certifying an engine family or families to standards under this subpart that are identical to standards applicable under 40 CFR parts 89, 94, 1039 or 1042 for that model year may certify any such family that contains both nonroad (including marine) and stationary engines as a single engine family and/or may include any

such family containing stationary engines in the averaging, banking and trading provisions applicable for such engines under those parts.

(e) Manufacturers of engine families discussed in paragraph (d) of this section may meet the labeling requirements referred to in paragraph (c) of this section for stationary CI ICE by either adding a separate label containing the information required in paragraph (c) of this section or by adding the words “and stationary” after the word “nonroad” or “marine,” as appropriate, to the label.

(f) Starting with the model years shown in table 5 to this subpart, stationary CI internal combustion engine manufacturers must add a permanent label stating that the engine is for stationary emergency use only to each new emergency stationary CI internal combustion engine greater than or equal to 19 KW (25 HP) that meets all the emission standards for emergency engines in § 60.4202 but does not meet all the emission standards for non-emergency engines in § 60.4201. The label must be added according to the labeling requirements specified in 40 CFR 1039.135(b). Engine manufacturers must specify in the owner's manual that operation of emergency engines is limited to emergency operations and required maintenance and testing.

(g) Manufacturers of fire pump engines may use the test cycle in table 6 to this subpart for testing fire pump engines and may test at the NFPA certified nameplate HP, provided that the engine is labeled as “Fire Pump Applications Only”.

(h) Engine manufacturers, including importers, may introduce into commerce uncertified engines or engines certified to earlier standards that were manufactured before the new or changed standards took effect until inventories are depleted, as long as such engines are part of normal inventory. For example, if the engine manufacturers' normal industry practice is to keep on hand a one-month supply of engines based on its projected sales, and a new tier of standards starts to apply for the 2009 model year, the engine manufacturer may manufacture engines based on the normal inventory requirements late in the 2008 model year, and sell those engines for installation. The engine manufacturer may not circumvent the provisions of §§ 60.4201 or 60.4202 by stockpiling engines that are built before new or changed standards take effect. Stockpiling of such engines beyond normal industry practice is a violation of this subpart.

(i) The replacement engine provisions of 40 CFR 89.1003(b)(7), 40 CFR 94.1103(b)(3), 40 CFR 94.1103(b)(4) and 40 CFR 1068.240 are applicable to stationary CI engines replacing existing equipment that is less than 15 years old.

[71 FR 39172, July 11, 2006, as amended at 76 FR 37969, June 28, 2011]

§ 60.4211 What are my compliance requirements if I am an owner or operator of a stationary CI internal combustion engine?

(a) If you are an owner or operator and must comply with the emission standards specified in this subpart, you must do all of the following, except as permitted under paragraph (g) of this section:

(1) Operate and maintain the stationary CI internal combustion engine and control device according to the manufacturer's emission-related written instructions;

(2) Change only those emission-related settings that are permitted by the manufacturer; and

(3) Meet the requirements of 40 CFR parts 89, 94 and/or 1068, as they apply to you.

(b) If you are an owner or operator of a pre-2007 model year stationary CI internal combustion engine and must comply with the emission standards specified in §§ 60.4204(a) or 60.4205(a), or if you are an owner or operator of a CI fire pump engine that is manufactured prior to the model years in table 3 to this subpart and must comply with the emission standards specified in § 60.4205(c), you must demonstrate compliance according to one of the methods specified in paragraphs (b)(1) through (5) of this section.

(1) Purchasing an engine certified according to 40 CFR part 89 or 40 CFR part 94, as applicable, for the same model year and maximum engine power. The engine must be installed and configured according to the manufacturer's specifications.

(2) Keeping records of performance test results for each pollutant for a test conducted on a similar engine. The test must have been conducted using the same methods specified in this subpart and these methods must have been followed correctly.

(3) Keeping records of engine manufacturer data indicating compliance with the standards.

(4) Keeping records of control device vendor data indicating compliance with the standards.

(5) Conducting an initial performance test to demonstrate compliance with the emission standards according to the requirements specified in § 60.4212, as applicable.

(c) If you are an owner or operator of a 2007 model year and later stationary CI internal combustion engine and must comply with the emission standards specified in § 60.4204(b) or § 60.4205(b), or if you are an owner or operator of a CI fire pump engine that is manufactured during or after the model year that applies to your fire pump engine power rating in table 3 to this subpart and must comply with the emission standards specified in § 60.4205(c), you must comply by purchasing an engine certified to the emission standards in § 60.4204(b), or § 60.4205(b) or (c), as applicable, for the same model year and maximum (or in the case of fire pumps, NFPA nameplate) engine power. The engine must be installed and configured according to the manufacturer's emission-related specifications, except as permitted in paragraph (g) of this section.

(d) If you are an owner or operator and must comply with the emission standards specified in § 60.4204(c) or § 60.4205(d), you must demonstrate compliance according to the requirements specified in paragraphs (d)(1) through (3) of this section.

(1) Conducting an initial performance test to demonstrate initial compliance with the emission standards as specified in § 60.4213.

(2) Establishing operating parameters to be monitored continuously to ensure the stationary internal combustion engine continues to meet the emission standards. The owner or operator must petition the Administrator for approval of operating parameters to be monitored continuously. The petition must include the information described in paragraphs (d)(2)(i) through (v) of this section.

(i) Identification of the specific parameters you propose to monitor continuously;

(ii) A discussion of the relationship between these parameters and NOX and PM emissions, identifying how the emissions of these pollutants change with changes in these parameters, and how limitations on these parameters will serve to limit NOX and PM emissions;

(iii) A discussion of how you will establish the upper and/or lower values for these parameters which will establish the limits on these parameters in the operating limitations;

(iv) A discussion identifying the methods and the instruments you will use to monitor these parameters, as well as the relative accuracy and precision of these methods and instruments; and

(v) A discussion identifying the frequency and methods for recalibrating the instruments you will use for monitoring these parameters.

(3) For non-emergency engines with a displacement of greater than or equal to 30 liters per cylinder, conducting annual performance tests to demonstrate continuous compliance with the emission standards as specified in § 60.4213.

(e) If you are an owner or operator of a modified or reconstructed stationary CI internal combustion engine and must comply with the emission standards specified in § 60.4204(e) or § 60.4205(f), you must demonstrate compliance according to one of the methods specified in paragraphs (e)(1) or (2) of this section.

(1) Purchasing, or otherwise owning or operating, an engine certified to the emission standards in § 60.4204(e) or § 60.4205(f), as applicable.

(2) Conducting a performance test to demonstrate initial compliance with the emission standards according to the requirements specified in § 60.4212 or § 60.4213, as appropriate. The test must be conducted within 60 days after the engine commences operation after the modification or reconstruction.

(f) If you own or operate an emergency stationary ICE, you must operate the emergency stationary ICE according to the requirements in paragraphs (f)(1) through (3) of this section. In order for the engine to be considered an emergency stationary ICE under this subpart, any operation other than emergency operation, maintenance and testing, emergency demand response, and operation in non-emergency situations for 50 hours per year, as described in paragraphs (f)(1) through (3) of this section, is prohibited. If you do not operate the engine according to the requirements in paragraphs (f)(1) through (3) of this section, the engine will not be considered an emergency engine under this subpart and must meet all requirements for non-emergency engines.

(1) There is no time limit on the use of emergency stationary ICE in emergency situations.

(2) You may operate your emergency stationary ICE for any combination of the purposes specified in paragraphs (f)(2)(i) through (iii) of this section for a maximum of 100 hours per calendar year. Any operation for non-emergency situations as allowed by paragraph (f)(3) of this section counts as part of the 100 hours per calendar year allowed by this paragraph (f)(2).

(i) Emergency stationary ICE may be operated for maintenance checks and readiness testing, provided that the tests are recommended by federal, state or local government, the manufacturer, the vendor, the regional transmission organization or equivalent balancing authority and transmission operator, or the insurance company associated with the engine. The owner or operator may petition the Administrator for approval of additional hours to be used for maintenance checks and readiness testing, but a petition is not required if the owner or operator maintains records indicating that federal, state, or local standards require maintenance and testing of emergency ICE beyond 100 hours per calendar year.

(ii) Emergency stationary ICE may be operated for emergency demand response for periods in which the Reliability Coordinator under the North American Electric Reliability Corporation (NERC) Reliability Standard EOP-002-3, Capacity and Energy Emergencies (incorporated by reference, see § 60.17), or other authorized entity as determined by the Reliability Coordinator, has declared an Energy Emergency Alert Level 2 as defined in the NERC Reliability Standard EOP-002-3.

(iii) Emergency stationary ICE may be operated for periods where there is a deviation of voltage or frequency of 5 percent or greater below standard voltage or frequency.

(3) Emergency stationary ICE may be operated for up to 50 hours per calendar year in non-emergency situations. The 50 hours of operation in non-emergency situations are counted as part of the 100 hours per calendar year for maintenance and testing and emergency demand response provided in paragraph (f)(2) of this section. Except as provided in paragraph (f)(3)(i) of this section, the 50 hours per calendar year for non-emergency situations cannot be used for peak shaving or non-emergency demand response, or to generate income for a facility to an electric grid or otherwise supply power as part of a financial arrangement with another entity.

(i) The 50 hours per year for non-emergency situations can be used to supply power as part of a financial arrangement with another entity if all of the following conditions are met:

(A) The engine is dispatched by the local balancing authority or local transmission and distribution system operator;

(B) The dispatch is intended to mitigate local transmission and/or distribution limitations so as to avert potential voltage collapse or line overloads that could lead to the interruption of power supply in a local area or region.

(C) The dispatch follows reliability, emergency operation or similar protocols that follow specific NERC, regional, state, public utility commission or local standards or guidelines.

(D) The power is provided only to the facility itself or to support the local transmission and distribution system.

(E) The owner or operator identifies and records the entity that dispatches the engine and the specific NERC, regional, state, public utility commission or local standards or guidelines that are being followed for dispatching the

engine. The local balancing authority or local transmission and distribution system operator may keep these records on behalf of the engine owner or operator.

(ii) [Reserved]

(g) If you do not install, configure, operate, and maintain your engine and control device according to the manufacturer's emission-related written instructions, or you change emission-related settings in a way that is not permitted by the manufacturer, you must demonstrate compliance as follows:

(1) If you are an owner or operator of a stationary CI internal combustion engine with maximum engine power less than 100 HP, you must keep a maintenance plan and records of conducted maintenance to demonstrate compliance and must, to the extent practicable, maintain and operate the engine in a manner consistent with good air pollution control practice for minimizing emissions. In addition, if you do not install and configure the engine and control device according to the manufacturer's emission-related written instructions, or you change the emission-related settings in a way that is not permitted by the manufacturer, you must conduct an initial performance test to demonstrate compliance with the applicable emission standards within 1 year of such action.

(2) If you are an owner or operator of a stationary CI internal combustion engine greater than or equal to 100 HP and less than or equal to 500 HP, you must keep a maintenance plan and records of conducted maintenance and must, to the extent practicable, maintain and operate the engine in a manner consistent with good air pollution control practice for minimizing emissions. In addition, you must conduct an initial performance test to demonstrate compliance with the applicable emission standards within 1 year of startup, or within 1 year after an engine and control device is no longer installed, configured, operated, and maintained in accordance with the manufacturer's emission-related written instructions, or within 1 year after you change emission-related settings in a way that is not permitted by the manufacturer.

(3) If you are an owner or operator of a stationary CI internal combustion engine greater than 500 HP, you must keep a maintenance plan and records of conducted maintenance and must, to the extent practicable, maintain and operate the engine in a manner consistent with good air pollution control practice for minimizing emissions. In addition, you must conduct an initial performance test to demonstrate compliance with the applicable emission standards within 1 year of startup, or within 1 year after an engine and control device is no longer installed, configured, operated, and maintained in accordance with the manufacturer's emission-related written instructions, or within 1 year after you change emission-related settings in a way that is not permitted by the manufacturer. You must conduct subsequent performance testing every 8,760 hours of engine operation or 3 years, whichever comes first, thereafter to demonstrate compliance with the applicable emission standards.

[71 FR 39172, July 11, 2006, as amended at 76 FR 37970, June 28, 2011; 78 FR 6695, Jan. 30, 2013]

Testing Requirements for Owners and Operators

§ 60.4212 What test methods and other procedures must I use if I am an owner or operator of a stationary CI internal combustion engine with a displacement of less than 30 liters per cylinder?

Owners and operators of stationary CI ICE with a displacement of less than 30 liters per cylinder who conduct performance tests pursuant to this subpart must do so according to paragraphs (a) through (e) of this section.

(a) The performance test must be conducted according to the in-use testing procedures in 40 CFR part 1039, subpart F, for stationary CI ICE with a displacement of less than 10 liters per cylinder, and according to 40 CFR part 1042, subpart F, for stationary CI ICE with a displacement of greater than or equal to 10 liters per cylinder and less than 30 liters per cylinder.

(b) Exhaust emissions from stationary CI ICE that are complying with the emission standards for new CI engines in 40 CFR part 1039 must not exceed the not-to-exceed (NTE) standards for the same model year and maximum engine power as required in 40 CFR 1039.101(e) and 40 CFR 1039.102(g)(1), except as specified in 40 CFR 1039.104(d). This requirement starts when NTE requirements take effect for nonroad diesel engines under 40 CFR part 1039.

(c) Exhaust emissions from stationary CI ICE that are complying with the emission standards for new CI engines in 40 CFR 89.112 or 40 CFR 94.8, as applicable, must not exceed the NTE numerical requirements, rounded to the same number of decimal places as the applicable standard in 40 CFR 89.112 or 40 CFR 94.8, as applicable, determined from the following equation:

$$\text{NTE requirement for each pollutant} = (1.25) \times (\text{STD}) \qquad \text{(Eq. 1)}$$

Where:

STD = The standard specified for that pollutant in 40 CFR 89.112 or 40 CFR 94.8, as applicable.

Alternatively, stationary CI ICE that are complying with the emission standards for new CI engines in 40 CFR 89.112 or 40 CFR 94.8 may follow the testing procedures specified in § 60.4213 of this subpart, as appropriate.

(d) Exhaust emissions from stationary CI ICE that are complying with the emission standards for pre-2007 model year engines in § 60.4204(a), § 60.4205(a), or § 60.4205(c) must not exceed the NTE numerical requirements, rounded to the same number of decimal places as the applicable standard in § 60.4204(a), § 60.4205(a), or § 60.4205(c), determined from the equation in paragraph (c) of this section.

Where:

STD = The standard specified for that pollutant in § 60.4204(a), § 60.4205(a), or § 60.4205(c).

Alternatively, stationary CI ICE that are complying with the emission standards for pre-2007 model year engines in § 60.4204(a), § 60.4205(a), or § 60.4205(c) may follow the testing procedures specified in § 60.4213, as appropriate.

(e) Exhaust emissions from stationary CI ICE that are complying with the emission standards for new CI engines in 40 CFR part 1042 must not exceed the NTE standards for the same model year and maximum engine power as required in 40 CFR 1042.101(c).

[71 FR 39172, July 11, 2006, as amended at 76 FR 37971, June 28, 2011]

§ 60.4213 What test methods and other procedures must I use if I am an owner or operator of a stationary CI internal combustion engine with a displacement of greater than or equal to 30 liters per cylinder?

Owners and operators of stationary CI ICE with a displacement of greater than or equal to 30 liters per cylinder must conduct performance tests according to paragraphs (a) through (f) of this section.

(a) Each performance test must be conducted according to the requirements in § 60.8 and under the specific conditions that this subpart specifies in table 7. The test must be conducted within 10 percent of 100 percent peak (or the highest achievable) load.

(b) You may not conduct performance tests during periods of startup, shutdown, or malfunction, as specified in § 60.8(c).

(c) You must conduct three separate test runs for each performance test required in this section, as specified in § 60.8(f). Each test run must last at least 1 hour.

(d) To determine compliance with the percent reduction requirement, you must follow the requirements as specified in paragraphs (d)(1) through (3) of this section.

(1) You must use Equation 2 of this section to determine compliance with the percent reduction requirement:

$$\frac{C_i - C_o}{C_i} \times 100 = R \qquad \text{(Eq. 2)}$$

Where:

Ci = concentration of NOX or PM at the control device inlet,

Co = concentration of NOX or PM at the control device outlet, and

R = percent reduction of NOX or PM emissions.

(2) You must normalize the NOX or PM concentrations at the inlet and outlet of the control device to a dry basis and to 15 percent oxygen (O2) using Equation 3 of this section, or an equivalent percent carbon dioxide (CO2) using the procedures described in paragraph (d)(3) of this section.

$$C_{adj} = C_d \frac{5.9}{20.9 - \% O_2} \qquad \text{(Eq. 3)}$$

Where:

Cadj = Calculated NOX or PM concentration adjusted to 15 percent O2 .

Cd = Measured concentration of NOX or PM, uncorrected.

5.9 = 20.9 percent O2 −15 percent O2 , the defined O2 correction value, percent.

%O2 = Measured O2 concentration, dry basis, percent.

(3) If pollutant concentrations are to be corrected to 15 percent O2 and CO2 concentration is measured in lieu of O2 concentration measurement, a CO2 correction factor is needed. Calculate the CO2 correction factor as described in paragraphs (d)(3)(i) through (iii) of this section.

(i) Calculate the fuel-specific Fo value for the fuel burned during the test using values obtained from Method 19, Section 5.2, and the following equation:

$$F_o = \frac{0.209 F_d}{F_c} \qquad \text{(Eq. 4)}$$

Where:

Fo = Fuel factor based on the ratio of O2 volume to the ultimate CO2 volume produced by the fuel at zero percent excess air.

0.209 = Fraction of air that is O2 , percent/100.

Fd = Ratio of the volume of dry effluent gas to the gross calorific value of the fuel from Method 19, dsm3 /J (dscf/106 Btu).

Fc = Ratio of the volume of CO2 produced to the gross calorific value of the fuel from Method 19, dsm3 /J (dscf/106 Btu).

(ii) Calculate the CO2 correction factor for correcting measurement data to 15 percent O2 , as follows:

$$X_{CO_2} = \frac{5.9}{F_o} \qquad \text{(Eq. 5)}$$

Where:

XCO2 = CO2 correction factor, percent.

5.9 = 20.9 percent O2 −15 percent O2 , the defined O2 correction value, percent.

(iii) Calculate the NOX and PM gas concentrations adjusted to 15 percent O2 using CO2 as follows:

$$C_{adj} = C_d \frac{X_{CO_2}}{\%CO_2} \qquad \text{(Eq. 6)}$$

Where:

Cadj = Calculated NOX or PM concentration adjusted to 15 percent O2 .

Cd = Measured concentration of NOX or PM, uncorrected.

%CO2 = Measured CO2 concentration, dry basis, percent.

(e) To determine compliance with the NOX mass per unit output emission limitation, convert the concentration of NOX in the engine exhaust using Equation 7 of this section:

$$ER = \frac{C_d \times 1.912 \times 10^{-3} \times Q \times T}{\text{KW-hour}} \qquad \text{(Eq. 7)}$$

Where:

ER = Emission rate in grams per KW-hour.

Cd = Measured NOX concentration in ppm.

1.912x10−3 = Conversion constant for ppm NOX to grams per standard cubic meter at 25 degrees Celsius.

Q = Stack gas volumetric flow rate, in standard cubic meter per hour.

T = Time of test run, in hours.

KW-hour = Brake work of the engine, in KW-hour.

(f) To determine compliance with the PM mass per unit output emission limitation, convert the concentration of PM in the engine exhaust using Equation 8 of this section:

$$ER = \frac{C_{adj} \times Q \times T}{\text{KW-hour}} \qquad \text{(Eq. 8)}$$

Where:

ER = Emission rate in grams per KW-hour.

Cadj = Calculated PM concentration in grams per standard cubic meter.

Q = Stack gas volumetric flow rate, in standard cubic meter per hour.

T = Time of test run, in hours.

KW-hour = Energy output of the engine, in KW.

[71 FR 39172, July 11, 2006, as amended at 76 FR 37971, June 28, 2011]

Notification, Reports, and Records for Owners and Operators

§ 60.4214 What are my notification, reporting, and recordkeeping requirements if I am an owner or operator of a stationary CI internal combustion engine?

(a) Owners and operators of non-emergency stationary CI ICE that are greater than 2,237 KW (3,000 HP), or have a displacement of greater than or equal to 10 liters per cylinder, or are pre-2007 model year engines that are greater than 130 KW (175 HP) and not certified, must meet the requirements of paragraphs (a)(1) and (2) of this section.

(1) Submit an initial notification as required in § 60.7(a)(1). The notification must include the information in paragraphs (a)(1)(i) through (v) of this section.

(i) Name and address of the owner or operator;

(ii) The address of the affected source;

(iii) Engine information including make, model, engine family, serial number, model year, maximum engine power, and engine displacement;

(iv) Emission control equipment; and

(v) Fuel used.

(2) Keep records of the information in paragraphs (a)(2)(i) through (iv) of this section.

(i) All notifications submitted to comply with this subpart and all documentation supporting any notification.

(ii) Maintenance conducted on the engine.

(iii) If the stationary CI internal combustion is a certified engine, documentation from the manufacturer that the engine is certified to meet the emission standards.

(iv) If the stationary CI internal combustion is not a certified engine, documentation that the engine meets the emission standards.

(b) If the stationary CI internal combustion engine is an emergency stationary internal combustion engine, the owner or operator is not required to submit an initial notification. Starting with the model years in table 5 to this subpart, if the emergency engine does not meet the standards applicable to non-emergency engines in the applicable model year, the owner or operator must keep records of the operation of the engine in emergency and non-emergency service that are recorded through the non-resettable hour meter. The owner must record the time of operation of the engine and the reason the engine was in operation during that time.

(c) If the stationary CI internal combustion engine is equipped with a diesel particulate filter, the owner or operator must keep records of any corrective action taken after the backpressure monitor has notified the owner or operator that the high backpressure limit of the engine is approached.

(d) If you own or operate an emergency stationary CI ICE with a maximum engine power more than 100 HP that operates or is contractually obligated to be available for more than 15 hours per calendar year for the purposes specified in § 60.4211(f)(2)(ii) and (iii) or that operates for the purposes specified in § 60.4211(f)(3)(i), you must submit an annual report according to the requirements in paragraphs (d)(1) through (3) of this section.

(1) The report must contain the following information:

(i) Company name and address where the engine is located.

(ii) Date of the report and beginning and ending dates of the reporting period.

(iii) Engine site rating and model year.

(iv) Latitude and longitude of the engine in decimal degrees reported to the fifth decimal place.

(v) Hours operated for the purposes specified in § 60.4211(f)(2)(ii) and (iii), including the date, start time, and end time for engine operation for the purposes specified in § 60.4211(f)(2)(ii) and (iii).

(vi) Number of hours the engine is contractually obligated to be available for the purposes specified in § 60.4211(f)(2)(ii) and (iii).

(vii) Hours spent for operation for the purposes specified in § 60.4211(f)(3)(i), including the date, start time, and end time for engine operation for the purposes specified in § 60.4211(f)(3)(i). The report must also identify the entity that dispatched the engine and the situation that necessitated the dispatch of the engine.

(2) The first annual report must cover the calendar year 2015 and must be submitted no later than March 31, 2016. Subsequent annual reports for each calendar year must be submitted no later than March 31 of the following calendar year.

(3) The annual report must be submitted electronically using the subpart specific reporting form in the Compliance and Emissions Data Reporting Interface (CEDRI) that is accessed through EPA's Central Data Exchange (CDX) (www.epa.gov/cdx). However, if the reporting form specific to this subpart is not available in CEDRI at the time that the report is due, the written report must be submitted to the Administrator at the appropriate address listed in § 60.4.

[71 FR 39172, July 11, 2006, as amended at 78 FR 6696, Jan. 30, 2013]

Special Requirements

§ 60.4215 What requirements must I meet for engines used in Guam, American Samoa, or the Commonwealth of the Northern Mariana Islands?

(a) Stationary CI ICE with a displacement of less than 30 liters per cylinder that are used in Guam, American Samoa, or the Commonwealth of the Northern Mariana Islands are required to meet the applicable emission standards in §§ 60.4202 and 60.4205.

(b) Stationary CI ICE that are used in Guam, American Samoa, or the Commonwealth of the Northern Mariana Islands are not required to meet the fuel requirements in § 60.4207.

(c) Stationary CI ICE with a displacement of greater than or equal to 30 liters per cylinder that are used in Guam, American Samoa, or the Commonwealth of the Northern Mariana Islands are required to meet the following emission standards:

(1) For engines installed prior to January 1, 2012, limit the emissions of NOX in the stationary CI internal combustion engine exhaust to the following:

(i) 17.0 g/KW-hr (12.7 g/HP-hr) when maximum engine speed is less than 130 rpm;

(ii) $45 \cdot n^{-0.2}$ g/KW-hr ($34 \cdot n^{-0.2}$ g/HP-hr) when maximum engine speed is 130 or more but less than 2,000 rpm, where n is maximum engine speed; and

(iii) 9.8 g/KW-hr (7.3 g/HP-hr) when maximum engine speed is 2,000 rpm or more.

(2) For engines installed on or after January 1, 2012, limit the emissions of NOX in the stationary CI internal combustion engine exhaust to the following:

(i) 14.4 g/KW-hr (10.7 g/HP-hr) when maximum engine speed is less than 130 rpm;

(ii) $44 \cdot n^{-0.23}$ g/KW-hr ($33 \cdot n^{-0.23}$ g/HP-hr) when maximum engine speed is greater than or equal to 130 but less than 2,000 rpm and where n is maximum engine speed; and

(iii) 7.7 g/KW-hr (5.7 g/HP-hr) when maximum engine speed is greater than or equal to 2,000 rpm.

(3) Limit the emissions of PM in the stationary CI internal combustion engine exhaust to 0.40 g/KW-hr (0.30 g/HP-hr).

[71 FR 39172, July 11, 2006, as amended at 76 FR 37971, June 28, 2011]

§ 60.4216 What requirements must I meet for engines used in Alaska?

(a) Prior to December 1, 2010, owners and operators of stationary CI ICE with a displacement of less than 30 liters per cylinder located in areas of Alaska not accessible by the FAHS should refer to 40 CFR part 69 to determine the diesel fuel requirements applicable to such engines.

(b) Except as indicated in paragraph (c) of this section, manufacturers, owners and operators of stationary CI ICE with a displacement of less than 10 liters per cylinder located in areas of Alaska not accessible by the FAHS may meet the requirements of this subpart by manufacturing and installing engines meeting the requirements of 40 CFR parts 94 or 1042, as appropriate, rather than the otherwise applicable requirements of 40 CFR parts 89 and 1039, as indicated in sections §§ 60.4201(f) and 60.4202(g) of this subpart.

(c) Manufacturers, owners and operators of stationary CI ICE that are located in areas of Alaska not accessible by the FAHS may choose to meet the applicable emission standards for emergency engines in § 60.4202 and § 60.4205, and not those for non-emergency engines in § 60.4201 and § 60.4204, except that for 2014 model year and later non-emergency CI ICE, the owner or operator of any such engine that was not certified as meeting Tier 4 PM standards, must meet the applicable requirements for PM in § 60.4201 and § 60.4204 or install a PM emission control device that achieves PM emission reductions of 85 percent, or 60 percent for engines with a displacement of greater than or equal to 30 liters per cylinder, compared to engine-out emissions.

(d) The provisions of § 60.4207 do not apply to owners and operators of pre-2014 model year stationary CI ICE subject to this subpart that are located in areas of Alaska not accessible by the FAHS.

(e) The provisions of § 60.4208(a) do not apply to owners and operators of stationary CI ICE subject to this subpart that are located in areas of Alaska not accessible by the FAHS until after December 31, 2009.

(f) The provisions of this section and § 60.4207 do not prevent owners and operators of stationary CI ICE subject to this subpart that are located in areas of Alaska not accessible by the FAHS from using fuels mixed with used lubricating oil, in volumes of up to 1.75 percent of the total fuel. The sulfur content of the used lubricating oil must be less than 200 parts per million. The used lubricating oil must meet the on-specification levels and properties for used oil in 40 CFR 279.11.

[76 FR 37971, June 28, 2011]

§ 60.4217 What emission standards must I meet if I am an owner or operator of a stationary internal combustion engine using special fuels?

Owners and operators of stationary CI ICE that do not use diesel fuel may petition the Administrator for approval of alternative emission standards, if they can demonstrate that they use a fuel that is not the fuel on which the manufacturer of the engine certified the engine and that the engine cannot meet the applicable standards required in § 60.4204 or § 60.4205 using such fuels and that use of such fuel is appropriate and reasonably necessary, considering cost, energy, technical feasibility, human health and environmental, and other factors, for the operation of the engine.

[76 FR 37972, June 28, 2011]

General Provisions

§ 60.4218 What parts of the General Provisions apply to me?

Table 8 to this subpart shows which parts of the General Provisions in §§ 60.1 through 60.19 apply to you.

Definitions

§ 60.4219 What definitions apply to this subpart?

As used in this subpart, all terms not defined herein shall have the meaning given them in the CAA and in subpart A of this part.

Certified emissions life means the period during which the engine is designed to properly function in terms of reliability and fuel consumption, without being remanufactured, specified as a number of hours of operation or calendar years, whichever comes first. The values for certified emissions life for stationary CI ICE with a displacement of less than 10 liters per cylinder are given in 40 CFR 1039.101(g). The values for certified emissions life for stationary CI ICE with a displacement of greater than or equal to 10 liters per cylinder and less than 30 liters per cylinder are given in 40 CFR 94.9(a).

Combustion turbine means all equipment, including but not limited to the turbine, the fuel, air, lubrication and exhaust gas systems, control systems (except emissions control equipment), and any ancillary components and sub-components comprising any simple cycle combustion turbine, any regenerative/recuperative cycle combustion turbine, the combustion turbine portion of any cogeneration cycle combustion system, or the combustion turbine portion of any combined cycle steam/electric generating system.

Compression ignition means relating to a type of stationary internal combustion engine that is not a spark ignition engine.

Date of manufacture means one of the following things:

(1) For freshly manufactured engines and modified engines, date of manufacture means the date the engine is originally produced.

(2) For reconstructed engines, date of manufacture means the date the engine was originally produced, except as specified in paragraph (3) of this definition.

(3) Reconstructed engines are assigned a new date of manufacture if the fixed capital cost of the new and refurbished components exceeds 75 percent of the fixed capital cost of a comparable entirely new facility. An engine that is produced from a previously used engine block does not retain the date of manufacture of the engine in which the engine block was previously used if the engine is produced using all new components except for the engine block. In these cases, the date of manufacture is the date of reconstruction or the date the new engine is produced.

Diesel fuel means any liquid obtained from the distillation of petroleum with a boiling point of approximately 150 to 360 degrees Celsius. One commonly used form is number 2 distillate oil.

Diesel particulate filter means an emission control technology that reduces PM emissions by trapping the particles in a flow filter substrate and periodically removes the collected particles by either physical action or by oxidizing (burning off) the particles in a process called regeneration.

Emergency stationary internal combustion engine means any stationary reciprocating internal combustion engine that meets all of the criteria in paragraphs (1) through (3) of this definition. All emergency stationary ICE must comply with the requirements specified in § 60.4211(f) in order to be considered emergency stationary ICE. If the engine does not comply with the requirements specified in § 60.4211(f), then it is not considered to be an emergency stationary ICE under this subpart.

(1) The stationary ICE is operated to provide electrical power or mechanical work during an emergency situation. Examples include stationary ICE used to produce power for critical networks or equipment (including power supplied to portions of a facility) when electric power from the local utility (or the normal power source, if the facility runs on its own power production) is interrupted, or stationary ICE used to pump water in the case of fire or flood, etc.

(2) The stationary ICE is operated under limited circumstances for situations not included in paragraph (1) of this definition, as specified in § 60.4211(f).

(3) The stationary ICE operates as part of a financial arrangement with another entity in situations not included in paragraph (1) of this definition only as allowed in § 60.4211(f)(2)(ii) or (iii) and § 60.4211(f)(3)(i).

Engine manufacturer means the manufacturer of the engine. See the definition of “manufacturer” in this section.

Fire pump engine means an emergency stationary internal combustion engine certified to NFPA requirements that is used to provide power to pump water for fire suppression or protection.

Freshly manufactured engine means an engine that has not been placed into service. An engine becomes freshly manufactured when it is originally produced.

Installed means the engine is placed and secured at the location where it is intended to be operated.

Manufacturer has the meaning given in section 216(1) of the Act. In general, this term includes any person who manufactures a stationary engine for sale in the United States or otherwise introduces a new stationary engine into commerce in the United States. This includes importers who import stationary engines for sale or resale.

Maximum engine power means maximum engine power as defined in 40 CFR 1039.801.

Model year means the calendar year in which an engine is manufactured (see “date of manufacture”), except as follows:

(1) Model year means the annual new model production period of the engine manufacturer in which an engine is manufactured (see “date of manufacture”), if the annual new model production period is different than the calendar year and includes January 1 of the calendar year for which the model year is named. It may not begin before January 2 of the previous calendar year and it must end by December 31 of the named calendar year.

(2) For an engine that is converted to a stationary engine after being placed into service as a nonroad or other non-stationary engine, model year means the calendar year or new model production period in which the engine was manufactured (see “date of manufacture”).

Other internal combustion engine means any internal combustion engine, except combustion turbines, which is not a reciprocating internal combustion engine or rotary internal combustion engine.

Reciprocating internal combustion engine means any internal combustion engine which uses reciprocating motion to convert heat energy into mechanical work.

Rotary internal combustion engine means any internal combustion engine which uses rotary motion to convert heat energy into mechanical work.

Spark ignition means relating to a gasoline, natural gas, or liquefied petroleum gas fueled engine or any other type of engine with a spark plug (or other sparking device) and with operating characteristics significantly similar to the theoretical Otto combustion cycle. Spark ignition engines usually use a throttle to regulate intake air flow to control power during normal operation. Dual-fuel engines in which a liquid fuel (typically diesel fuel) is used for CI and gaseous fuel (typically natural gas) is used as the primary fuel at an annual average ratio of less than 2 parts diesel fuel to 100 parts total fuel on an energy equivalent basis are spark ignition engines.

Stationary internal combustion engine means any internal combustion engine, except combustion turbines, that converts heat energy into mechanical work and is not mobile. Stationary ICE differ from mobile ICE in that a stationary internal combustion engine is not a nonroad engine as defined at 40 CFR 1068.30 (excluding paragraph (2)(ii) of that definition), and is not used to propel a motor vehicle, aircraft, or a vehicle used solely for competition. Stationary ICE include reciprocating ICE, rotary ICE, and other ICE, except combustion turbines.

Subpart means 40 CFR part 60, subpart IIII.

[71 FR 39172, July 11, 2006, as amended at 76 FR 37972, June 28, 2011; 78 FR 6696, Jan. 30, 2013]

Table 1 to Subpart IIII of Part 60—Emission Standards for Stationary Pre-2007 Model Year Engines With a Displacement of <10 Liters per Cylinder and 2007-2010 Model Year Engines >2,237 KW (3,000 HP) and With a Displacement of <10 Liters per Cylinder

[As stated in §§ 60.4201(b), 60.4202(b), 60.4204(a), and 60.4205(a), you must comply with the following emission standards]

Maximum engine power	Emission standards for stationary pre-2007 model year engines with a displacement of <10 liters per cylinder and 2007-2010 model year engines >2,237 KW (3,000 HP) and with a displacement of <10 liters per cylinder in g/KW-hr (g/HP-hr)				
	NMHC + NO_X	HC	NO_X	CO	PM
KW<8 (HP<11)	10.5 (7.8)			8.0 (6.0)	1.0 (0.75)
8≤KW<19 (11≤HP<25)	9.5 (7.1)			6.6 (4.9)	0.80 (0.60)
19≤KW<37 (25≤HP<50)	9.5 (7.1)			5.5 (4.1)	0.80 (0.60)
37≤KW<56 (50≤HP<75)			9.2 (6.9)		
56≤KW<75 (75≤HP<100)			9.2 (6.9)		
75≤KW<130 (100≤HP<175)			9.2 (6.9)		
130≤KW<225 (175≤HP<300)		1.3 (1.0)	9.2 (6.9)	11.4 (8.5)	0.54 (0.40)
225≤KW<450 (300≤HP<600)		1.3 (1.0)	9.2 (6.9)	11.4 (8.5)	0.54 (0.40)
450≤KW≤560 (600≤HP≤750)		1.3 (1.0)	9.2 (6.9)	11.4 (8.5)	0.54 (0.40)
KW>560 (HP>750)		1.3 (1.0)	9.2 (6.9)	11.4 (8.5)	0.54 (0.40)

Table 2 to Subpart IIII of Part 60—Emission Standards for 2008 Model Year and Later Emergency Stationary CI ICE <37 KW (50 HP) With a Displacement of <10 Liters per Cylinder

[As stated in § 60.4202(a)(1), you must comply with the following emission standards]

Engine power	Emission standards for 2008 model year and later emergency stationary CI ICE <37 KW (50 HP) with a displacement of <10 liters per cylinder in g/KW-hr (g/HP-hr)			
	Model year(s)	NO_X+ NMHC	CO	PM
KW<8 (HP<11)	2008+	7.5 (5.6)	8.0 (6.0)	0.40 (0.30)
8≤KW<19 (11≤HP<25)	2008+	7.5 (5.6)	6.6 (4.9)	0.40 (0.30)
19≤KW<37 (25≤HP<50)	2008+	7.5 (5.6)	5.5 (4.1)	0.30 (0.22)

Table 3 to Subpart IIII of Part 60—Certification Requirements for Stationary Fire Pump Engines

As stated in § 60.4202(d), you must certify new stationary fire pump engines beginning with the following model years:

Engine power	Starting model year engine manufacturers must certify new stationary fire pump engines according to § 60.4202(d)[1]
KW<75 (HP<100)	2011
75≤KW<130 (100≤HP<175)	2010
130≤KW≤560 (175≤HP≤750)	2009
KW>560 (HP>750)	2008

[1]Manufacturers of fire pump stationary CI ICE with a maximum engine power greater than or equal to 37 kW (50 HP) and less than 450 KW (600 HP) and a rated speed of greater than 2,650 revolutions per minute (rpm) are not required to certify such engines until three model years following the model year indicated in this Table 3 for engines in the applicable engine power category.

[71 FR 39172, July 11, 2006, as amended at 76 FR 37972, June 28, 2011]

Table 4 to Subpart IIII of Part 60—Emission Standards for Stationary Fire Pump Engines

[As stated in §§ 60.4202(d) and 60.4205(c), you must comply with the following emission standards for stationary fire pump engines]

Maximum engine power	Model year(s)	NMHC + NO_X	CO	PM
KW<8 (HP<11)	2010 and earlier	10.5 (7.8)	8.0 (6.0)	1.0 (0.75)
	2011+	7.5 (5.6)		0.40 (0.30)
8≤KW<19 (11≤HP<25)	2010 and earlier	9.5 (7.1)	6.6 (4.9)	0.80 (0.60)
	2011+	7.5 (5.6)		0.40 (0.30)

Maximum engine power	Model year(s)	NMHC + NO_X	CO	PM
19≤KW<37 (25≤HP<50)	2010 and earlier	9.5 (7.1)	5.5 (4.1)	0.80 (0.60)
	2011+	7.5 (5.6)		0.30 (0.22)
37≤KW<56 (50≤HP<75)	2010 and earlier	10.5 (7.8)	5.0 (3.7)	0.80 (0.60)
	2011+ [1]	4.7 (3.5)		0.40 (0.30)
56≤KW<75 (75≤HP<100)	2010 and earlier	10.5 (7.8)	5.0 (3.7)	0.80 (0.60)
	2011+ [1]	4.7 (3.5)		0.40 (0.30)
75≤KW<130 (100≤HP<175)	2009 and earlier	10.5 (7.8)	5.0 (3.7)	0.80 (0.60)
	2010+ [2]	4.0 (3.0)		0.30 (0.22)
130≤KW<225 (175≤HP<300)	2008 and earlier	10.5 (7.8)	3.5 (2.6)	0.54 (0.40)
	2009+ [3]	4.0 (3.0)		0.20 (0.15)
225≤KW<450 (300≤HP<600)	2008 and earlier	10.5 (7.8)	3.5 (2.6)	0.54 (0.40)
	2009+ [3]	4.0 (3.0)		0.20 (0.15)
450≤KW≤560 (600≤HP≤750)	2008 and earlier	10.5 (7.8)	3.5 (2.6)	0.54 (0.40)
	2009+	4.0 (3.0)		0.20 (0.15)
KW>560 (HP>750)	2007 and earlier	10.5 (7.8)	3.5 (2.6)	0.54 (0.40)
	2008+	6.4 (4.8)		0.20 (0.15)

[1] For model years 2011-2013, manufacturers, owners and operators of fire pump stationary CI ICE in this engine power category with a rated speed of greater than 2,650 revolutions per minute (rpm) may comply with the emission limitations for 2010 model year engines.

[2] For model years 2010-2012, manufacturers, owners and operators of fire pump stationary CI ICE in this engine power category with a rated speed of greater than 2,650 rpm may comply with the emission limitations for 2009 model year engines.

[3] In model years 2009-2011, manufacturers of fire pump stationary CI ICE in this engine power category with a rated speed of greater than 2,650 rpm may comply with the emission limitations for 2008 model year engines.

Table 5 to Subpart IIII of Part 60—Labeling and Recordkeeping Requirements for New Stationary Emergency Engines

[You must comply with the labeling requirements in § 60.4210(f) and the recordkeeping requirements in § 60.4214(b) for new emergency stationary CI ICE beginning in the following model years:]

Engine power	Starting model year
19≤KW<56 (25≤HP<75)	2013
56≤KW<130 (75≤HP<175)	2012
KW≥130 (HP≥175)	2011

Table 6 to Subpart IIII of Part 60—Optional 3-Mode Test Cycle for Stationary Fire Pump Engines

[As stated in § 60.4210(g), manufacturers of fire pump engines may use the following test cycle for testing fire pump engines:]

Mode No.	Engine speed [1]	Torque (percent) [2]	Weighting factors
1	Rated	100	0.30
2	Rated	75	0.50
3	Rated	50	0.20

[1] Engine speed: ±2 percent of point.

[2] Torque: NFPA certified nameplate HP for 100 percent point. All points should be ±2 percent of engine percent load value.

Table 7 to Subpart IIII of Part 60—Requirements for Performance Tests for Stationary CI ICE With a Displacement of ≥30 Liters per Cylinder

[As stated in § 60.4213, you must comply with the following requirements for performance tests for stationary CI ICE with a displacement of ≥30 liters per cylinder:]

For each	Complying with the requirement to	You must	Using	According to the following requirements
1. Stationary CI internal combustion engine with a displacement of ≥30 liters per cylinder	a. Reduce NO_Xemissions by 90 percent or more	i. Select the sampling port location and the number of traverse points;	(1) Method 1 or 1A of 40 CFR part 60, appendix A	(a) Sampling sites must be located at the inlet and outlet of the control device.
		ii. Measure O_2at the inlet and outlet of the control device;	(2) Method 3, 3A, or 3B of 40 CFR part 60, appendix A	(b) Measurements to determine O_2concentration must be made at the same time as the measurements for NO_Xconcentration.
		iii. If necessary, measure moisture content at the inlet and outlet of the control device; and,	(3) Method 4 of 40 CFR part 60, appendix A, Method 320 of 40 CFR part 63, appendix A, or ASTM D 6348-03 (incorporated by reference, see § 60.17)	(c) Measurements to determine moisture content must be made at the same time as the measurements for NO_Xconcentration.
		iv. Measure NO_Xat the inlet and outlet of the control device	(4) Method 7E of 40 CFR part 60, appendix A, Method 320 of 40 CFR part 63, appendix A, or ASTM D 6348-03 (incorporated by reference, see § 60.17)	(d) NO_Xconcentration must be at 15 percent O_2, dry basis. Results of this test consist of the average of the three 1-hour or longer runs.

For each	Complying with the requirement to	You must	Using	According to the following requirements
	b. Limit the concentration of NO_Xin the stationary CI internal combustion engine exhaust.	i. Select the sampling port location and the number of traverse points;	(1) Method 1 or 1A of 40 CFR part 60, appendix A	(a) If using a control device, the sampling site must be located at the outlet of the control device.
		ii. Determine the O_2concentration of the stationary internal combustion engine exhaust at the sampling port location; and,	(2) Method 3, 3A, or 3B of 40 CFR part 60, appendix A	(b) Measurements to determine O_2concentration must be made at the same time as the measurement for NO_Xconcentration.
		iii. If necessary, measure moisture content of the stationary internal combustion engine exhaust at the sampling port location; and,	(3) Method 4 of 40 CFR part 60, appendix A, Method 320 of 40 CFR part 63, appendix A, or ASTM D 6348-03 (incorporated by reference, see § 60.17)	(c) Measurements to determine moisture content must be made at the same time as the measurement for NO_Xconcentration.
		iv. Measure NO_Xat the exhaust of the stationary internal combustion engine	(4) Method 7E of 40 CFR part 60, appendix A, Method 320 of 40 CFR part 63, appendix A, or ASTM D 6348-03 (incorporated by reference, see § 60.17)	(d) NO_Xconcentration must be at 15 percent O_2, dry basis. Results of this test consist of the average of the three 1-hour or longer runs.
	c. Reduce PM emissions by 60 percent or more	i. Select the sampling port location and the number of traverse points;	(1) Method 1 or 1A of 40 CFR part 60, appendix A	(a) Sampling sites must be located at the inlet and outlet of the control device.
		ii. Measure O_2at the inlet and outlet of the control device;	(2) Method 3, 3A, or 3B of 40 CFR part 60, appendix A	(b) Measurements to determine O_2concentration must be made at the same time as the measurements for PM concentration.
		iii. If necessary, measure moisture content at the inlet and outlet of the control device; and	(3) Method 4 of 40 CFR part 60, appendix A	(c) Measurements to determine and moisture content must be made at the same time as the measurements for PM concentration.
		iv. Measure PM at the inlet and outlet of the control device	(4) Method 5 of 40 CFR part 60, appendix A	(d) PM concentration must be at 15 percent O_2, dry basis. Results of this test consist of the average of the three 1-hour or longer runs.
	d. Limit the concentration of PM in the stationary CI internal combustion engine exhaust	i. Select the sampling port location and the number of traverse points;	(1) Method 1 or 1A of 40 CFR part 60, appendix A	(a) If using a control device, the sampling site must be located at the outlet of the control device.

For each	Complying with the requirement to	You must	Using	According to the following requirements
		ii. Determine the O_2concentration of the stationary internal combustion engine exhaust at the sampling port location; and	(2) Method 3, 3A, or 3B of 40 CFR part 60, appendix A	(b) Measurements to determine O_2concentration must be made at the same time as the measurements for PM concentration.
		iii. If necessary, measure moisture content of the stationary internal combustion engine exhaust at the sampling port location; and	(3) Method 4 of 40 CFR part 60, appendix A	(c) Measurements to determine moisture content must be made at the same time as the measurements for PM concentration.
		iv. Measure PM at the exhaust of the stationary internal combustion engine	(4) Method 5 of 40 CFR part 60, appendix A	(d) PM concentration must be at 15 percent O_2, dry basis. Results of this test consist of the average of the three 1-hour or longer runs.

Table 8 to Subpart IIII of Part 60—Applicability of General Provisions to Subpart IIII

[As stated in § 60.4218, you must comply with the following applicable General Provisions:]

General Provisions citation	Subject of citation	Applies to subpart	Explanation
§ 60.1	General applicability of the General Provisions	Yes	
§ 60.2	Definitions	Yes	Additional terms defined in § 60.4219.
§ 60.3	Units and abbreviations	Yes	
§ 60.4	Address	Yes	
§ 60.5	Determination of construction or modification	Yes	
§ 60.6	Review of plans	Yes	
§ 60.7	Notification and Recordkeeping	Yes	Except that § 60.7 only applies as specified in § 60.4214(a).
§ 60.8	Performance tests	Yes	Except that § 60.8 only applies to stationary CI ICE with a displacement of (≥30 liters per cylinder and engines that are not certified.
§ 60.9	Availability of information	Yes	
§ 60.10	State Authority	Yes	
§ 60.11	Compliance with standards and maintenance requirements	No	Requirements are specified in subpart IIII.
§ 60.12	Circumvention	Yes	
§ 60.13	Monitoring requirements	Yes	Except that § 60.13 only applies to stationary CI ICE with a displacement of (≥30 liters per cylinder.
§ 60.14	Modification	Yes	
§ 60.15	Reconstruction	Yes	
§ 60.16	Priority list	Yes	

General Provisions citation	Subject of citation	Applies to subpart	Explanation
§ 60.17	Incorporations by reference	Yes	
§ 60.18	General control device requirements	No	
§ 60.19	General notification and reporting requirements	Yes	

Attachment G
To Part 70 Operating Permit Renewal No. T089-29907-00121

[Downloaded from the eCFR on May 13, 2013]

Electronic Code of Federal Regulations

Title 40: Protection of Environment

Part 63, Subpart ZZZZ—National Emissions Standards for Hazardous Air Pollutants for Stationary Reciprocating Internal Combustion Engines

SOURCE: 69 FR 33506, June 15, 2004, unless otherwise noted.

What This Subpart Covers

§ 63.6580 What is the purpose of subpart ZZZZ?

Subpart ZZZZ establishes national emission limitations and operating limitations for hazardous air pollutants (HAP) emitted from stationary reciprocating internal combustion engines (RICE) located at major and area sources of HAP emissions. This subpart also establishes requirements to demonstrate initial and continuous compliance with the emission limitations and operating limitations.

[73 FR 3603, Jan. 18, 2008]

§ 63.6585 Am I subject to this subpart?

You are subject to this subpart if you own or operate a stationary RICE at a major or area source of HAP emissions, except if the stationary RICE is being tested at a stationary RICE test cell/stand.

(a) A stationary RICE is any internal combustion engine which uses reciprocating motion to convert heat energy into mechanical work and which is not mobile. Stationary RICE differ from mobile RICE in that a stationary RICE is not a non-road engine as defined at 40 CFR 1068.30, and is not used to propel a motor vehicle or a vehicle used solely for competition.

(b) A major source of HAP emissions is a plant site that emits or has the potential to emit any single HAP at a rate of 10 tons (9.07 megagrams) or more per year or any combination of HAP at a rate of 25 tons (22.68 megagrams) or more per year, except that for oil and gas production facilities, a major source of HAP emissions is determined for each surface site.

(c) An area source of HAP emissions is a source that is not a major source.

(d) If you are an owner or operator of an area source subject to this subpart, your status as an entity subject to a standard or other requirements under this subpart does not subject you to the obligation to obtain a permit under 40 CFR part 70 or 71, provided you are not required to obtain a permit under 40 CFR 70.3(a) or 40 CFR 71.3(a) for a reason other than your status as an area source under this subpart. Notwithstanding the previous sentence, you must continue to comply with the provisions of this subpart as applicable.

(e) If you are an owner or operator of a stationary RICE used for national security purposes, you may be eligible to request an exemption from the requirements of this subpart as described in 40 CFR part 1068, subpart C.

(f) The emergency stationary RICE listed in paragraphs (f)(1) through (3) of this section are not subject to this subpart. The stationary RICE must meet the definition of an emergency stationary RICE in § 63.6675, which includes operating according to the provisions specified in § 63.6640(f).

(1) Existing residential emergency stationary RICE located at an area source of HAP emissions that do not operate or are not contractually obligated to be available for more than 15 hours per calendar year for the purposes specified in § 63.6640(f)(2)(ii) and (iii) and that do not operate for the purpose specified in § 63.6640(f)(4)(ii).

(2) Existing commercial emergency stationary RICE located at an area source of HAP emissions that do not operate or are not contractually obligated to be available for more than 15 hours per calendar year for the purposes specified in § 63.6640(f)(2)(ii) and (iii) and that do not operate for the purpose specified in § 63.6640(f)(4)(ii).

(3) Existing institutional emergency stationary RICE located at an area source of HAP emissions that do not operate or are not contractually obligated to be available for more than 15 hours per calendar year for the purposes specified in § 63.6640(f)(2)(ii) and (iii) and that do not operate for the purpose specified in § 63.6640(f)(4)(ii).

[69 FR 33506, June 15, 2004, as amended at 73 FR 3603, Jan. 18, 2008; 78 FR 6700, Jan. 30, 2013]

§ 63.6590 What parts of my plant does this subpart cover?

This subpart applies to each affected source.

(a) *Affected source.* An affected source is any existing, new, or reconstructed stationary RICE located at a major or area source of HAP emissions, excluding stationary RICE being tested at a stationary RICE test cell/stand.

(1) *Existing stationary RICE.*

(i) For stationary RICE with a site rating of more than 500 brake horsepower (HP) located at a major source of HAP emissions, a stationary RICE is existing if you commenced construction or reconstruction of the stationary RICE before December 19, 2002.

(ii) For stationary RICE with a site rating of less than or equal to 500 brake HP located at a major source of HAP emissions, a stationary RICE is existing if you commenced construction or reconstruction of the stationary RICE before June 12, 2006.

(iii) For stationary RICE located at an area source of HAP emissions, a stationary RICE is existing if you commenced construction or reconstruction of the stationary RICE before June 12, 2006.

(iv) A change in ownership of an existing stationary RICE does not make that stationary RICE a new or reconstructed stationary RICE.

(2) *New stationary RICE.* (i) A stationary RICE with a site rating of more than 500 brake HP located at a major source of HAP emissions is new if you commenced construction of the stationary RICE on or after December 19, 2002.

(ii) A stationary RICE with a site rating of equal to or less than 500 brake HP located at a major source of HAP emissions is new if you commenced construction of the stationary RICE on or after June 12, 2006.

(iii) A stationary RICE located at an area source of HAP emissions is new if you commenced construction of the stationary RICE on or after June 12, 2006.

(3) *Reconstructed stationary RICE.* (i) A stationary RICE with a site rating of more than 500 brake HP located at a major source of HAP emissions is reconstructed if you meet the definition of reconstruction in § 63.2 and reconstruction is commenced on or after December 19, 2002.

(ii) A stationary RICE with a site rating of equal to or less than 500 brake HP located at a major source of HAP emissions is reconstructed if you meet the definition of reconstruction in § 63.2 and reconstruction is commenced on or after June 12, 2006.

(iii) A stationary RICE located at an area source of HAP emissions is reconstructed if you meet the definition of reconstruction in § 63.2 and reconstruction is commenced on or after June 12, 2006.

(b) *Stationary RICE subject to limited requirements.* (1) An affected source which meets either of the criteria in paragraphs (b)(1)(i) through (ii) of this section does not have to meet the requirements of this subpart and of subpart A of this part except for the initial notification requirements of § 63.6645(f).

(i) The stationary RICE is a new or reconstructed emergency stationary RICE with a site rating of more than 500 brake HP located at a major source of HAP emissions that does not operate or is not contractually obligated to be available for more than 15 hours per calendar year for the purposes specified in § 63.6640(f)(2)(ii) and (iii).

(ii) The stationary RICE is a new or reconstructed limited use stationary RICE with a site rating of more than 500 brake HP located at a major source of HAP emissions.

(2) A new or reconstructed stationary RICE with a site rating of more than 500 brake HP located at a major source of HAP emissions which combusts landfill or digester gas equivalent to 10 percent or more of the gross heat input on an annual basis must meet the initial notification requirements of § 63.6645(f) and the requirements of §§ 63.6625(c), 63.6650(g), and 63.6655(c). These stationary RICE do not have to meet the emission limitations and operating limitations of this subpart.

(3) The following stationary RICE do not have to meet the requirements of this subpart and of subpart A of this part, including initial notification requirements:

(i) Existing spark ignition 2 stroke lean burn (2SLB) stationary RICE with a site rating of more than 500 brake HP located at a major source of HAP emissions;

(ii) Existing spark ignition 4 stroke lean burn (4SLB) stationary RICE with a site rating of more than 500 brake HP located at a major source of HAP emissions;

(iii) Existing emergency stationary RICE with a site rating of more than 500 brake HP located at a major source of HAP emissions that does not operate or is not contractually obligated to be available for more than 15 hours per calendar year for the purposes specified in § 63.6640(f)(2)(ii) and (iii).

(iv) Existing limited use stationary RICE with a site rating of more than 500 brake HP located at a major source of HAP emissions;

(v) Existing stationary RICE with a site rating of more than 500 brake HP located at a major source of HAP emissions that combusts landfill gas or digester gas equivalent to 10 percent or more of the gross heat input on an annual basis;

(c) *Stationary RICE subject to Regulations under 40 CFR Part 60.* An affected source that meets any of the criteria in paragraphs (c)(1) through (7) of this section must meet the requirements of this part by meeting the requirements of 40 CFR part 60 subpart IIII, for compression ignition engines or 40 CFR part 60 subpart JJJJ, for spark ignition engines. No further requirements apply for such engines under this part.

(1) A new or reconstructed stationary RICE located at an area source;

(2) A new or reconstructed 2SLB stationary RICE with a site rating of less than or equal to 500 brake HP located at a major source of HAP emissions;

(3) A new or reconstructed 4SLB stationary RICE with a site rating of less than 250 brake HP located at a major source of HAP emissions;

(4) A new or reconstructed spark ignition 4 stroke rich burn (4SRB) stationary RICE with a site rating of less than or equal to 500 brake HP located at a major source of HAP emissions;

(5) A new or reconstructed stationary RICE with a site rating of less than or equal to 500 brake HP located at a major source of HAP emissions which combusts landfill or digester gas equivalent to 10 percent or more of the gross heat input on an annual basis;

(6) A new or reconstructed emergency or limited use stationary RICE with a site rating of less than or equal to 500 brake HP located at a major source of HAP emissions;

(7) A new or reconstructed compression ignition (CI) stationary RICE with a site rating of less than or equal to 500 brake HP located at a major source of HAP emissions.

[69 FR 33506, June 15, 2004, as amended at 73 FR 3604, Jan. 18, 2008; 75 FR 9674, Mar. 3, 2010; 75 FR 37733, June 30, 2010; 75 FR 51588, Aug. 20, 2010; 78 FR 6700, Jan. 30, 2013]

§ 63.6595 When do I have to comply with this subpart?

(a) *Affected sources.* (1) If you have an existing stationary RICE, excluding existing non-emergency CI stationary RICE, with a site rating of more than 500 brake HP located at a major source of HAP emissions, you must comply with the applicable emission limitations, operating limitations and other requirements no later than June 15, 2007. If you have an existing non-emergency CI stationary RICE with a site rating of more than 500 brake HP located at a major source of HAP emissions, an existing stationary CI RICE with a site rating of less than or equal to 500 brake HP located at a major source of HAP emissions, or an existing stationary CI RICE located at an area source of HAP emissions, you must comply with the applicable emission limitations, operating limitations, and other requirements no later than May 3, 2013. If you have an existing stationary SI RICE with a site rating of less than or equal to 500 brake HP located at a major source of HAP emissions, or an existing stationary SI RICE located at an area source of HAP emissions, you must comply with the applicable emission limitations, operating limitations, and other requirements no later than October 19, 2013.

(2) If you start up your new or reconstructed stationary RICE with a site rating of more than 500 brake HP located at a major source of HAP emissions before August 16, 2004, you must comply with the applicable emission limitations and operating limitations in this subpart no later than August 16, 2004.

(3) If you start up your new or reconstructed stationary RICE with a site rating of more than 500 brake HP located at a major source of HAP emissions after August 16, 2004, you must comply with the applicable emission limitations and operating limitations in this subpart upon startup of your affected source.

(4) If you start up your new or reconstructed stationary RICE with a site rating of less than or equal to 500 brake HP located at a major source of HAP emissions before January 18, 2008, you must comply with the applicable emission limitations and operating limitations in this subpart no later than January 18, 2008.

(5) If you start up your new or reconstructed stationary RICE with a site rating of less than or equal to 500 brake HP located at a major source of HAP emissions after January 18, 2008, you must comply with the applicable emission limitations and operating limitations in this subpart upon startup of your affected source.

(6) If you start up your new or reconstructed stationary RICE located at an area source of HAP emissions before January 18, 2008, you must comply with the applicable emission limitations and operating limitations in this subpart no later than January 18, 2008.

(7) If you start up your new or reconstructed stationary RICE located at an area source of HAP emissions after January 18, 2008, you must comply with the applicable emission limitations and operating limitations in this subpart upon startup of your affected source.

(b) *Area sources that become major sources.* If you have an area source that increases its emissions or its potential to emit such that it becomes a major source of HAP, the compliance dates in paragraphs (b)(1) and (2) of this section apply to you.

(1) Any stationary RICE for which construction or reconstruction is commenced after the date when your area source becomes a major source of HAP must be in compliance with this subpart upon startup of your affected source.

(2) Any stationary RICE for which construction or reconstruction is commenced before your area source becomes a major source of HAP must be in compliance with the provisions of this subpart that are applicable to RICE located at major sources within 3 years after your area source becomes a major source of HAP.

(c) If you own or operate an affected source, you must meet the applicable notification requirements in § 63.6645 and in 40 CFR part 63, subpart A.

[69 FR 33506, June 15, 2004, as amended at 73 FR 3604, Jan. 18, 2008; 75 FR 9675, Mar. 3, 2010; 75 FR 51589, Aug. 20, 2010; 78 FR 6701, Jan. 30, 2013]

Emission and Operating Limitations

§ 63.6600 What emission limitations and operating limitations must I meet if I own or operate a stationary RICE with a site rating of more than 500 brake HP located at a major source of HAP emissions?

Compliance with the numerical emission limitations established in this subpart is based on the results of testing the average of three 1-hour runs using the testing requirements and procedures in § 63.6620 and Table 4 to this subpart.

(a) If you own or operate an existing, new, or reconstructed spark ignition 4SRB stationary RICE with a site rating of more than 500 brake HP located at a major source of HAP emissions, you must comply with the emission limitations in Table 1a to this subpart and the operating limitations in Table 1b to this subpart which apply to you.

(b) If you own or operate a new or reconstructed 2SLB stationary RICE with a site rating of more than 500 brake HP located at major source of HAP emissions, a new or reconstructed 4SLB stationary RICE with a site rating of more than 500 brake HP located at major source of HAP emissions, or a new or reconstructed CI stationary RICE with a site rating of more than 500 brake HP located at a major source of HAP emissions, you must comply with the emission limitations in Table 2a to this subpart and the operating limitations in Table 2b to this subpart which apply to you.

(c) If you own or operate any of the following stationary RICE with a site rating of more than 500 brake HP located at a major source of HAP emissions, you do not need to comply with the emission limitations in Tables 1a, 2a, 2c, and 2d to this subpart or operating limitations in Tables 1b and 2b to this subpart: an existing 2SLB stationary RICE; an existing 4SLB stationary RICE; a stationary RICE that combusts landfill gas or digester gas equivalent to 10 percent or more of the gross heat input on an annual basis; an emergency stationary RICE; or a limited use stationary RICE.

(d) If you own or operate an existing non-emergency stationary CI RICE with a site rating of more than 500 brake HP located at a major source of HAP emissions, you must comply with the emission limitations in Table 2c to this subpart and the operating limitations in Table 2b to this subpart which apply to you.

[73 FR 3605, Jan. 18, 2008, as amended at 75 FR 9675, Mar. 3, 2010]

§ 63.6601 What emission limitations must I meet if I own or operate a new or reconstructed 4SLB stationary RICE with a site rating of greater than or equal to 250 brake HP and less than or equal to 500 brake HP located at a major source of HAP emissions?

Compliance with the numerical emission limitations established in this subpart is based on the results of testing the average of three 1-hour runs using the testing requirements and procedures in § 63.6620 and Table 4 to this subpart. If you own or operate a new or reconstructed 4SLB stationary RICE with a site rating of greater than or equal to 250 and less than or equal to 500 brake HP located at major source of HAP emissions manufactured on or after January 1, 2008, you must comply with the emission limitations in Table 2a to this subpart and the operating limitations in Table 2b to this subpart which apply to you.

[73 FR 3605, Jan. 18, 2008, as amended at 75 FR 9675, Mar. 3, 2010; 75 FR 51589, Aug. 20, 2010]

§ 63.6602 What emission limitations and other requirements must I meet if I own or operate an existing stationary RICE with a site rating of equal to or less than 500 brake HP located at a major source of HAP emissions?

If you own or operate an existing stationary RICE with a site rating of equal to or less than 500 brake HP located at a major source of HAP emissions, you must comply with the emission limitations and other requirements in Table 2c to this subpart which apply to you. Compliance with the numerical emission limitations established in this subpart is

based on the results of testing the average of three 1-hour runs using the testing requirements and procedures in § 63.6620 and Table 4 to this subpart.

[78 FR 6701, Jan. 30, 2013]

§ 63.6603 What emission limitations, operating limitations, and other requirements must I meet if I own or operate an existing stationary RICE located at an area source of HAP emissions?

Compliance with the numerical emission limitations established in this subpart is based on the results of testing the average of three 1-hour runs using the testing requirements and procedures in § 63.6620 and Table 4 to this subpart.

(a) If you own or operate an existing stationary RICE located at an area source of HAP emissions, you must comply with the requirements in Table 2d to this subpart and the operating limitations in Table 2b to this subpart that apply to you.

(b) If you own or operate an existing stationary non-emergency CI RICE with a site rating of more than 300 HP located at an area source of HAP that meets either paragraph (b)(1) or (2) of this section, you do not have to meet the numerical CO emission limitations specified in Table 2d of this subpart. Existing stationary non-emergency CI RICE with a site rating of more than 300 HP located at an area source of HAP that meet either paragraph (b)(1) or (2) of this section must meet the management practices that are shown for stationary non-emergency CI RICE with a site rating of less than or equal to 300 HP in Table 2d of this subpart.

(1) The area source is located in an area of Alaska that is not accessible by the Federal Aid Highway System (FAHS).

(2) The stationary RICE is located at an area source that meets paragraphs (b)(2)(i), (ii), and (iii) of this section.

(i) The only connection to the FAHS is through the Alaska Marine Highway System (AMHS), or the stationary RICE operation is within an isolated grid in Alaska that is not connected to the statewide electrical grid referred to as the Alaska Railbelt Grid.

(ii) At least 10 percent of the power generated by the stationary RICE on an annual basis is used for residential purposes.

(iii) The generating capacity of the area source is less than 12 megawatts, or the stationary RICE is used exclusively for backup power for renewable energy.

(c) If you own or operate an existing stationary non-emergency CI RICE with a site rating of more than 300 HP located on an offshore vessel that is an area source of HAP and is a nonroad vehicle that is an Outer Continental Shelf (OCS) source as defined in 40 CFR 55.2, you do not have to meet the numerical CO emission limitations specified in Table 2d of this subpart. You must meet all of the following management practices:

(1) Change oil every 1,000 hours of operation or annually, whichever comes first. Sources have the option to utilize an oil analysis program as described in § 63.6625(i) in order to extend the specified oil change requirement.

(2) Inspect and clean air filters every 750 hours of operation or annually, whichever comes first, and replace as necessary.

(3) Inspect fuel filters and belts, if installed, every 750 hours of operation or annually, whichever comes first, and replace as necessary.

(4) Inspect all flexible hoses every 1,000 hours of operation or annually, whichever comes first, and replace as necessary.

(d) If you own or operate an existing non-emergency CI RICE with a site rating of more than 300 HP located at an area source of HAP emissions that is certified to the Tier 1 or Tier 2 emission standards in Table 1 of 40 CFR 89.112 and that is subject to an enforceable state or local standard that requires the engine to be replaced no later than June

1, 2018, you may until January 1, 2015, or 12 years after the installation date of the engine (whichever is later), but not later than June 1, 2018, choose to comply with the management practices that are shown for stationary non-emergency CI RICE with a site rating of less than or equal to 300 HP in Table 2d of this subpart instead of the applicable emission limitations in Table 2d, operating limitations in Table 2b, and crankcase ventilation system requirements in § 63.6625(g). You must comply with the emission limitations in Table 2d and operating limitations in Table 2b that apply for non-emergency CI RICE with a site rating of more than 300 HP located at an area source of HAP emissions by January 1, 2015, or 12 years after the installation date of the engine (whichever is later), but not later than June 1, 2018. You must also comply with the crankcase ventilation system requirements in § 63.6625(g) by January 1, 2015, or 12 years after the installation date of the engine (whichever is later), but not later than June 1, 2018.

(e) If you own or operate an existing non-emergency CI RICE with a site rating of more than 300 HP located at an area source of HAP emissions that is certified to the Tier 3 (Tier 2 for engines above 560 kilowatt (kW)) emission standards in Table 1 of 40 CFR 89.112, you may comply with the requirements under this part by meeting the requirements for Tier 3 engines (Tier 2 for engines above 560 kW) in 40 CFR part 60 subpart IIII instead of the emission limitations and other requirements that would otherwise apply under this part for existing non-emergency CI RICE with a site rating of more than 300 HP located at an area source of HAP emissions.

(f) An existing non-emergency SI 4SLB and 4SRB stationary RICE with a site rating of more than 500 HP located at area sources of HAP must meet the definition of remote stationary RICE in § 63.6675 on the initial compliance date for the engine, October 19, 2013, in order to be considered a remote stationary RICE under this subpart. Owners and operators of existing non-emergency SI 4SLB and 4SRB stationary RICE with a site rating of more than 500 HP located at area sources of HAP that meet the definition of remote stationary RICE in § 63.6675 of this subpart as of October 19, 2013 must evaluate the status of their stationary RICE every 12 months. Owners and operators must keep records of the initial and annual evaluation of the status of the engine. If the evaluation indicates that the stationary RICE no longer meets the definition of remote stationary RICE in § 63.6675 of this subpart, the owner or operator must comply with all of the requirements for existing non-emergency SI 4SLB and 4SRB stationary RICE with a site rating of more than 500 HP located at area sources of HAP that are not remote stationary RICE within 1 year of the evaluation.

[75 FR 9675, Mar. 3, 2010, as amended at 75 FR 51589, Aug. 20, 2010; 76 FR 12866, Mar. 9, 2011; 78 FR 6701, Jan. 30, 2013]

§ 63.6604 What fuel requirements must I meet if I own or operate a stationary CI RICE?

(a) If you own or operate an existing non-emergency, non-black start CI stationary RICE with a site rating of more than 300 brake HP with a displacement of less than 30 liters per cylinder that uses diesel fuel, you must use diesel fuel that meets the requirements in 40 CFR 80.510(b) for nonroad diesel fuel.

(b) Beginning January 1, 2015, if you own or operate an existing emergency CI stationary RICE with a site rating of more than 100 brake HP and a displacement of less than 30 liters per cylinder that uses diesel fuel and operates or is contractually obligated to be available for more than 15 hours per calendar year for the purposes specified in § 63.6640(f)(2)(ii) and (iii) or that operates for the purpose specified in § 63.6640(f)(4)(ii), you must use diesel fuel that meets the requirements in 40 CFR 80.510(b) for nonroad diesel fuel, except that any existing diesel fuel purchased (or otherwise obtained) prior to January 1, 2015, may be used until depleted.

(c) Beginning January 1, 2015, if you own or operate a new emergency CI stationary RICE with a site rating of more than 500 brake HP and a displacement of less than 30 liters per cylinder located at a major source of HAP that uses diesel fuel and operates or is contractually obligated to be available for more than 15 hours per calendar year for the purposes specified in § 63.6640(f)(2)(ii) and (iii), you must use diesel fuel that meets the requirements in 40 CFR 80.510(b) for nonroad diesel fuel, except that any existing diesel fuel purchased (or otherwise obtained) prior to January 1, 2015, may be used until depleted.

(d) Existing CI stationary RICE located in Guam, American Samoa, the Commonwealth of the Northern Mariana Islands, at area sources in areas of Alaska that meet either § 63.6603(b)(1) or § 63.6603(b)(2), or are on offshore vessels that meet § 63.6603(c) are exempt from the requirements of this section.

[78 FR 6702, Jan. 30, 2013]

General Compliance Requirements

§ 63.6605 What are my general requirements for complying with this subpart?

(a) You must be in compliance with the emission limitations, operating limitations, and other requirements in this subpart that apply to you at all times.

(b) At all times you must operate and maintain any affected source, including associated air pollution control equipment and monitoring equipment, in a manner consistent with safety and good air pollution control practices for minimizing emissions. The general duty to minimize emissions does not require you to make any further efforts to reduce emissions if levels required by this standard have been achieved. Determination of whether such operation and maintenance procedures are being used will be based on information available to the Administrator which may include, but is not limited to, monitoring results, review of operation and maintenance procedures, review of operation and maintenance records, and inspection of the source.

[75 FR 9675, Mar. 3, 2010, as amended at 78 FR 6702, Jan. 30, 2013]

Testing and Initial Compliance Requirements

§ 63.6610 By what date must I conduct the initial performance tests or other initial compliance demonstrations if I own or operate a stationary RICE with a site rating of more than 500 brake HP located at a major source of HAP emissions?

If you own or operate a stationary RICE with a site rating of more than 500 brake HP located at a major source of HAP emissions you are subject to the requirements of this section.

(a) You must conduct the initial performance test or other initial compliance demonstrations in Table 4 to this subpart that apply to you within 180 days after the compliance date that is specified for your stationary RICE in § 63.6595 and according to the provisions in § 63.7(a)(2).

(b) If you commenced construction or reconstruction between December 19, 2002 and June 15, 2004 and own or operate stationary RICE with a site rating of more than 500 brake HP located at a major source of HAP emissions, you must demonstrate initial compliance with either the proposed emission limitations or the promulgated emission limitations no later than February 10, 2005 or no later than 180 days after startup of the source, whichever is later, according to § 63.7(a)(2)(ix).

(c) If you commenced construction or reconstruction between December 19, 2002 and June 15, 2004 and own or operate stationary RICE with a site rating of more than 500 brake HP located at a major source of HAP emissions, and you chose to comply with the proposed emission limitations when demonstrating initial compliance, you must conduct a second performance test to demonstrate compliance with the promulgated emission limitations by December 13, 2007 or after startup of the source, whichever is later, according to § 63.7(a)(2)(ix).

(d) An owner or operator is not required to conduct an initial performance test on units for which a performance test has been previously conducted, but the test must meet all of the conditions described in paragraphs (d)(1) through (5) of this section.

(1) The test must have been conducted using the same methods specified in this subpart, and these methods must have been followed correctly.

(2) The test must not be older than 2 years.

(3) The test must be reviewed and accepted by the Administrator.

(4) Either no process or equipment changes must have been made since the test was performed, or the owner or operator must be able to demonstrate that the results of the performance test, with or without adjustments, reliably demonstrate compliance despite process or equipment changes.

(5) The test must be conducted at any load condition within plus or minus 10 percent of 100 percent load.

[69 FR 33506, June 15, 2004, as amended at 73 FR 3605, Jan. 18, 2008]

§ 63.6611 By what date must I conduct the initial performance tests or other initial compliance demonstrations if I own or operate a new or reconstructed 4SLB SI stationary RICE with a site rating of greater than or equal to 250 and less than or equal to 500 brake HP located at a major source of HAP emissions?

If you own or operate a new or reconstructed 4SLB stationary RICE with a site rating of greater than or equal to 250 and less than or equal to 500 brake HP located at a major source of HAP emissions, you must conduct an initial performance test within 240 days after the compliance date that is specified for your stationary RICE in § 63.6595 and according to the provisions specified in Table 4 to this subpart, as appropriate.

[73 FR 3605, Jan. 18, 2008, as amended at 75 FR 51589, Aug. 20, 2010]

§ 63.6612 By what date must I conduct the initial performance tests or other initial compliance demonstrations if I own or operate an existing stationary RICE with a site rating of less than or equal to 500 brake HP located at a major source of HAP emissions or an existing stationary RICE located at an area source of HAP emissions?

If you own or operate an existing stationary RICE with a site rating of less than or equal to 500 brake HP located at a major source of HAP emissions or an existing stationary RICE located at an area source of HAP emissions you are subject to the requirements of this section.

(a) You must conduct any initial performance test or other initial compliance demonstration according to Tables 4 and 5 to this subpart that apply to you within 180 days after the compliance date that is specified for your stationary RICE in § 63.6595 and according to the provisions in § 63.7(a)(2).

(b) An owner or operator is not required to conduct an initial performance test on a unit for which a performance test has been previously conducted, but the test must meet all of the conditions described in paragraphs (b)(1) through (4) of this section.

(1) The test must have been conducted using the same methods specified in this subpart, and these methods must have been followed correctly.

(2) The test must not be older than 2 years.

(3) The test must be reviewed and accepted by the Administrator.

(4) Either no process or equipment changes must have been made since the test was performed, or the owner or operator must be able to demonstrate that the results of the performance test, with or without adjustments, reliably demonstrate compliance despite process or equipment changes.

[75 FR 9676, Mar. 3, 2010, as amended at 75 FR 51589, Aug. 20, 2010]

§ 63.6615 When must I conduct subsequent performance tests?

If you must comply with the emission limitations and operating limitations, you must conduct subsequent performance tests as specified in Table 3 of this subpart.

§ 63.6620 What performance tests and other procedures must I use?

(a) You must conduct each performance test in Tables 3 and 4 of this subpart that applies to you.

(b) Each performance test must be conducted according to the requirements that this subpart specifies in Table 4 to this subpart. If you own or operate a non-operational stationary RICE that is subject to performance testing, you do not need to start up the engine solely to conduct the performance test. Owners and operators of a non-operational engine can conduct the performance test when the engine is started up again. The test must be conducted at any load condition within plus or minus 10 percent of 100 percent load for the stationary RICE listed in paragraphs (b)(1) through (4) of this section.

(1) Non-emergency 4SRB stationary RICE with a site rating of greater than 500 brake HP located at a major source of HAP emissions.

(2) New non-emergency 4SLB stationary RICE with a site rating of greater than or equal to 250 brake HP located at a major source of HAP emissions.

(3) New non-emergency 2SLB stationary RICE with a site rating of greater than 500 brake HP located at a major source of HAP emissions.

(4) New non-emergency CI stationary RICE with a site rating of greater than 500 brake HP located at a major source of HAP emissions.

(c) [Reserved]

(d) You must conduct three separate test runs for each performance test required in this section, as specified in § 63.7(e)(3). Each test run must last at least 1 hour, unless otherwise specified in this subpart.

(e)(1) You must use Equation 1 of this section to determine compliance with the percent reduction requirement:

$$\frac{C_i - C_o}{C_i} \times 100 = R \quad (Eq.\ 1)$$

Where:

C_i = concentration of carbon monoxide (CO), total hydrocarbons (THC), or formaldehyde at the control device inlet,

C_o = concentration of CO, THC, or formaldehyde at the control device outlet, and

R = percent reduction of CO, THC, or formaldehyde emissions.

(2) You must normalize the CO, THC, or formaldehyde concentrations at the inlet and outlet of the control device to a dry basis and to 15 percent oxygen, or an equivalent percent carbon dioxide (CO_2). If pollutant concentrations are to be corrected to 15 percent oxygen and CO_2 concentration is measured in lieu of oxygen concentration measurement, a CO_2 correction factor is needed. Calculate the CO_2 correction factor as described in paragraphs (e)(2)(i) through (iii) of this section.

(i) Calculate the fuel-specific F_o value for the fuel burned during the test using values obtained from Method 19, Section 5.2, and the following equation:

$$F_o = \frac{0.209\ F_d}{F_c} \quad (Eq.\ 2)$$

Where:

F_o = Fuel factor based on the ratio of oxygen volume to the ultimate CO_2 volume produced by the fuel at zero percent excess air.

0.209 = Fraction of air that is oxygen, percent/100.

F_d = Ratio of the volume of dry effluent gas to the gross calorific value of the fuel from Method 19, dsm^3 /J (dscf/10^6 Btu).

F_c = Ratio of the volume of CO_2 produced to the gross calorific value of the fuel from Method 19, dsm^3 /J (dscf/10^6 Btu)

(ii) Calculate the CO_2 correction factor for correcting measurement data to 15 percent O_2 , as follows:

$$X_{CO2} = \frac{5.9}{F_o} \quad (Eq. 3)$$

Where:

X_{CO2} = CO_2 correction factor, percent.

5.9 = 20.9 percent O_2 —15 percent O_2 , the defined O_2 correction value, percent.

(iii) Calculate the CO, THC, and formaldehyde gas concentrations adjusted to 15 percent O_2 using CO_2 as follows:

$$C_{adj} = C_d \frac{X_{CO2}}{\%CO_2} \quad (Eq. 4)$$

Where:

C_{adj} = Calculated concentration of CO, THC, or formaldehyde adjusted to 15 percent O_2.

C_d = Measured concentration of CO, THC, or formaldehyde, uncorrected.

X_{CO2} = CO_2 correction factor, percent.

%CO_2 = Measured CO_2 concentration measured, dry basis, percent.

(f) If you comply with the emission limitation to reduce CO and you are not using an oxidation catalyst, if you comply with the emission limitation to reduce formaldehyde and you are not using NSCR, or if you comply with the emission limitation to limit the concentration of formaldehyde in the stationary RICE exhaust and you are not using an oxidation catalyst or NSCR, you must petition the Administrator for operating limitations to be established during the initial performance test and continuously monitored thereafter; or for approval of no operating limitations. You must not conduct the initial performance test until after the petition has been approved by the Administrator.

(g) If you petition the Administrator for approval of operating limitations, your petition must include the information described in paragraphs (g)(1) through (5) of this section.

(1) Identification of the specific parameters you propose to use as operating limitations;

(2) A discussion of the relationship between these parameters and HAP emissions, identifying how HAP emissions change with changes in these parameters, and how limitations on these parameters will serve to limit HAP emissions;

(3) A discussion of how you will establish the upper and/or lower values for these parameters which will establish the limits on these parameters in the operating limitations;

(4) A discussion identifying the methods you will use to measure and the instruments you will use to monitor these parameters, as well as the relative accuracy and precision of these methods and instruments; and

(5) A discussion identifying the frequency and methods for recalibrating the instruments you will use for monitoring these parameters.

(h) If you petition the Administrator for approval of no operating limitations, your petition must include the information described in paragraphs (h)(1) through (7) of this section.

(1) Identification of the parameters associated with operation of the stationary RICE and any emission control device which could change intentionally (*e.g.,* operator adjustment, automatic controller adjustment, etc.) or unintentionally (*e.g.,* wear and tear, error, etc.) on a routine basis or over time;

(2) A discussion of the relationship, if any, between changes in the parameters and changes in HAP emissions;

(3) For the parameters which could change in such a way as to increase HAP emissions, a discussion of whether establishing limitations on the parameters would serve to limit HAP emissions;

(4) For the parameters which could change in such a way as to increase HAP emissions, a discussion of how you could establish upper and/or lower values for the parameters which would establish limits on the parameters in operating limitations;

(5) For the parameters, a discussion identifying the methods you could use to measure them and the instruments you could use to monitor them, as well as the relative accuracy and precision of the methods and instruments;

(6) For the parameters, a discussion identifying the frequency and methods for recalibrating the instruments you could use to monitor them; and

(7) A discussion of why, from your point of view, it is infeasible or unreasonable to adopt the parameters as operating limitations.

(i) The engine percent load during a performance test must be determined by documenting the calculations, assumptions, and measurement devices used to measure or estimate the percent load in a specific application. A written report of the average percent load determination must be included in the notification of compliance status. The following information must be included in the written report: the engine model number, the engine manufacturer, the year of purchase, the manufacturer's site-rated brake horsepower, the ambient temperature, pressure, and humidity during the performance test, and all assumptions that were made to estimate or calculate percent load during the performance test must be clearly explained. If measurement devices such as flow meters, kilowatt meters, beta analyzers, stain gauges, etc. are used, the model number of the measurement device, and an estimate of its accurate in percentage of true value must be provided.

[69 FR 33506, June 15, 2004, as amended at 75 FR 9676, Mar. 3, 2010; 78 FR 6702, Jan. 30, 2013]

§ 63.6625 What are my monitoring, installation, collection, operation, and maintenance requirements?

(a) If you elect to install a CEMS as specified in Table 5 of this subpart, you must install, operate, and maintain a CEMS to monitor CO and either O_2 or CO_2 according to the requirements in paragraphs (a)(1) through (4) of this section. If you are meeting a requirement to reduce CO emissions, the CEMS must be installed at both the inlet and outlet of the control device. If you are meeting a requirement to limit the concentration of CO, the CEMS must be installed at the outlet of the control device.

(1) Each CEMS must be installed, operated, and maintained according to the applicable performance specifications of 40 CFR part 60, appendix B.

(2) You must conduct an initial performance evaluation and an annual relative accuracy test audit (RATA) of each CEMS according to the requirements in § 63.8 and according to the applicable performance specifications of 40 CFR part 60, appendix B as well as daily and periodic data quality checks in accordance with 40 CFR part 60, appendix F, procedure 1.

(3) As specified in § 63.8(c)(4)(ii), each CEMS must complete a minimum of one cycle of operation (sampling, analyzing, and data recording) for each successive 15-minute period. You must have at least two data points, with each representing a different 15-minute period, to have a valid hour of data.

(4) The CEMS data must be reduced as specified in § 63.8(g)(2) and recorded in parts per million or parts per billion (as appropriate for the applicable limitation) at 15 percent oxygen or the equivalent CO_2 concentration.

(b) If you are required to install a continuous parameter monitoring system (CPMS) as specified in Table 5 of this subpart, you must install, operate, and maintain each CPMS according to the requirements in paragraphs (b)(1) through (6) of this section. For an affected source that is complying with the emission limitations and operating limitations on March 9, 2011, the requirements in paragraph (b) of this section are applicable September 6, 2011.

(1) You must prepare a site-specific monitoring plan that addresses the monitoring system design, data collection, and the quality assurance and quality control elements outlined in paragraphs (b)(1)(i) through (v) of this section and in § 63.8(d). As specified in § 63.8(f)(4), you may request approval of monitoring system quality assurance and quality control procedures alternative to those specified in paragraphs (b)(1) through (5) of this section in your site-specific monitoring plan.

(i) The performance criteria and design specifications for the monitoring system equipment, including the sample interface, detector signal analyzer, and data acquisition and calculations;

(ii) Sampling interface (*e.g.,* thermocouple) location such that the monitoring system will provide representative measurements;

(iii) Equipment performance evaluations, system accuracy audits, or other audit procedures;

(iv) Ongoing operation and maintenance procedures in accordance with provisions in § 63.8(c)(1)(ii) and (c)(3); and

(v) Ongoing reporting and recordkeeping procedures in accordance with provisions in § 63.10(c), (e)(1), and (e)(2)(i).

(2) You must install, operate, and maintain each CPMS in continuous operation according to the procedures in your site-specific monitoring plan.

(3) The CPMS must collect data at least once every 15 minutes (see also § 63.6635).

(4) For a CPMS for measuring temperature range, the temperature sensor must have a minimum tolerance of 2.8 degrees Celsius (5 degrees Fahrenheit) or 1 percent of the measurement range, whichever is larger.

(5) You must conduct the CPMS equipment performance evaluation, system accuracy audits, or other audit procedures specified in your site-specific monitoring plan at least annually.

(6) You must conduct a performance evaluation of each CPMS in accordance with your site-specific monitoring plan.

(c) If you are operating a new or reconstructed stationary RICE which fires landfill gas or digester gas equivalent to 10 percent or more of the gross heat input on an annual basis, you must monitor and record your fuel usage daily with separate fuel meters to measure the volumetric flow rate of each fuel. In addition, you must operate your stationary RICE in a manner which reasonably minimizes HAP emissions.

(d) If you are operating a new or reconstructed emergency 4SLB stationary RICE with a site rating of greater than or equal to 250 and less than or equal to 500 brake HP located at a major source of HAP emissions, you must install a non-resettable hour meter prior to the startup of the engine.

(e) If you own or operate any of the following stationary RICE, you must operate and maintain the stationary RICE and after-treatment control device (if any) according to the manufacturer's emission-related written instructions or develop your own maintenance plan which must provide to the extent practicable for the maintenance and operation of the engine in a manner consistent with good air pollution control practice for minimizing emissions:

(1) An existing stationary RICE with a site rating of less than 100 HP located at a major source of HAP emissions;

(2) An existing emergency or black start stationary RICE with a site rating of less than or equal to 500 HP located at a major source of HAP emissions;

(3) An existing emergency or black start stationary RICE located at an area source of HAP emissions;

(4) An existing non-emergency, non-black start stationary CI RICE with a site rating less than or equal to 300 HP located at an area source of HAP emissions;

(5) An existing non-emergency, non-black start 2SLB stationary RICE located at an area source of HAP emissions;

(6) An existing non-emergency, non-black start stationary RICE located at an area source of HAP emissions which combusts landfill or digester gas equivalent to 10 percent or more of the gross heat input on an annual basis.

(7) An existing non-emergency, non-black start 4SLB stationary RICE with a site rating less than or equal to 500 HP located at an area source of HAP emissions;

(8) An existing non-emergency, non-black start 4SRB stationary RICE with a site rating less than or equal to 500 HP located at an area source of HAP emissions;

(9) An existing, non-emergency, non-black start 4SLB stationary RICE with a site rating greater than 500 HP located at an area source of HAP emissions that is operated 24 hours or less per calendar year; and

(10) An existing, non-emergency, non-black start 4SRB stationary RICE with a site rating greater than 500 HP located at an area source of HAP emissions that is operated 24 hours or less per calendar year.

(f) If you own or operate an existing emergency stationary RICE with a site rating of less than or equal to 500 brake HP located at a major source of HAP emissions or an existing emergency stationary RICE located at an area source of HAP emissions, you must install a non-resettable hour meter if one is not already installed.

(g) If you own or operate an existing non-emergency, non-black start CI engine greater than or equal to 300 HP that is not equipped with a closed crankcase ventilation system, you must comply with either paragraph (g)(1) or paragraph (2) of this section. Owners and operators must follow the manufacturer's specified maintenance requirements for operating and maintaining the open or closed crankcase ventilation systems and replacing the crankcase filters, or can request the Administrator to approve different maintenance requirements that are as protective as manufacturer requirements. Existing CI engines located at area sources in areas of Alaska that meet either § 63.6603(b)(1) or § 63.6603(b)(2) do not have to meet the requirements of this paragraph (g). Existing CI engines located on offshore vessels that meet § 63.6603(c) do not have to meet the requirements of this paragraph (g).

(1) Install a closed crankcase ventilation system that prevents crankcase emissions from being emitted to the atmosphere, or

(2) Install an open crankcase filtration emission control system that reduces emissions from the crankcase by filtering the exhaust stream to remove oil mist, particulates and metals.

(h) If you operate a new, reconstructed, or existing stationary engine, you must minimize the engine's time spent at idle during startup and minimize the engine's startup time to a period needed for appropriate and safe loading of the engine, not to exceed 30 minutes, after which time the emission standards applicable to all times other than startup in Tables 1a, 2a, 2c, and 2d to this subpart apply.

(i) If you own or operate a stationary CI engine that is subject to the work, operation or management practices in items 1 or 2 of Table 2c to this subpart or in items 1 or 4 of Table 2d to this subpart, you have the option of utilizing an oil analysis program in order to extend the specified oil change requirement in Tables 2c and 2d to this subpart. The oil analysis must be performed at the same frequency specified for changing the oil in Table 2c or 2d to this subpart. The analysis program must at a minimum analyze the following three parameters: Total Base Number, viscosity, and percent water content. The condemning limits for these parameters are as follows: Total Base Number is less than 30 percent of the Total Base Number of the oil when new; viscosity of the oil has changed by more than 20 percent from

the viscosity of the oil when new; or percent water content (by volume) is greater than 0.5. If all of these condemning limits are not exceeded, the engine owner or operator is not required to change the oil. If any of the limits are exceeded, the engine owner or operator must change the oil within 2 business days of receiving the results of the analysis; if the engine is not in operation when the results of the analysis are received, the engine owner or operator must change the oil within 2 business days or before commencing operation, whichever is later. The owner or operator must keep records of the parameters that are analyzed as part of the program, the results of the analysis, and the oil changes for the engine. The analysis program must be part of the maintenance plan for the engine.

(j) If you own or operate a stationary SI engine that is subject to the work, operation or management practices in items 6, 7, or 8 of Table 2c to this subpart or in items 5, 6, 7, 9, or 11 of Table 2d to this subpart, you have the option of utilizing an oil analysis program in order to extend the specified oil change requirement in Tables 2c and 2d to this subpart. The oil analysis must be performed at the same frequency specified for changing the oil in Table 2c or 2d to this subpart. The analysis program must at a minimum analyze the following three parameters: Total Acid Number, viscosity, and percent water content. The condemning limits for these parameters are as follows: Total Acid Number increases by more than 3.0 milligrams of potassium hydroxide (KOH) per gram from Total Acid Number of the oil when new; viscosity of the oil has changed by more than 20 percent from the viscosity of the oil when new; or percent water content (by volume) is greater than 0.5. If all of these condemning limits are not exceeded, the engine owner or operator is not required to change the oil. If any of the limits are exceeded, the engine owner or operator must change the oil within 2 business days of receiving the results of the analysis; if the engine is not in operation when the results of the analysis are received, the engine owner or operator must change the oil within 2 business days or before commencing operation, whichever is later. The owner or operator must keep records of the parameters that are analyzed as part of the program, the results of the analysis, and the oil changes for the engine. The analysis program must be part of the maintenance plan for the engine.

[69 FR 33506, June 15, 2004, as amended at 73 FR 3606, Jan. 18, 2008; 75 FR 9676, Mar. 3, 2010; 75 FR 51589, Aug. 20, 2010; 76 FR 12866, Mar. 9, 2011; 78 FR 6703, Jan. 30, 2013]

§ 63.6630 How do I demonstrate initial compliance with the emission limitations, operating limitations, and other requirements?

(a) You must demonstrate initial compliance with each emission limitation, operating limitation, and other requirement that applies to you according to Table 5 of this subpart.

(b) During the initial performance test, you must establish each operating limitation in Tables 1b and 2b of this subpart that applies to you.

(c) You must submit the Notification of Compliance Status containing the results of the initial compliance demonstration according to the requirements in § 63.6645.

(d) Non-emergency 4SRB stationary RICE complying with the requirement to reduce formaldehyde emissions by 76 percent or more can demonstrate initial compliance with the formaldehyde emission limit by testing for THC instead of formaldehyde. The testing must be conducted according to the requirements in Table 4 of this subpart. The average reduction of emissions of THC determined from the performance test must be equal to or greater than 30 percent.

(e) The initial compliance demonstration required for existing non-emergency 4SLB and 4SRB stationary RICE with a site rating of more than 500 HP located at an area source of HAP that are not remote stationary RICE and that are operated more than 24 hours per calendar year must be conducted according to the following requirements:

(1) The compliance demonstration must consist of at least three test runs.

(2) Each test run must be of at least 15 minute duration, except that each test conducted using the method in appendix A to this subpart must consist of at least one measurement cycle and include at least 2 minutes of test data phase measurement.

(3) If you are demonstrating compliance with the CO concentration or CO percent reduction requirement, you must measure CO emissions using one of the CO measurement methods specified in Table 4 of this subpart, or using appendix A to this subpart.

(4) If you are demonstrating compliance with the THC percent reduction requirement, you must measure THC emissions using Method 25A, reported as propane, of 40 CFR part 60, appendix A.

(5) You must measure O_2 using one of the O_2 measurement methods specified in Table 4 of this subpart. Measurements to determine O_2 concentration must be made at the same time as the measurements for CO or THC concentration.

(6) If you are demonstrating compliance with the CO or THC percent reduction requirement, you must measure CO or THC emissions and O_2 emissions simultaneously at the inlet and outlet of the control device.

[69 FR 33506, June 15, 2004, as amended at 78 FR 6704, Jan. 30, 2013]

Continuous Compliance Requirements

§ 63.6635 How do I monitor and collect data to demonstrate continuous compliance?

(a) If you must comply with emission and operating limitations, you must monitor and collect data according to this section.

(b) Except for monitor malfunctions, associated repairs, required performance evaluations, and required quality assurance or control activities, you must monitor continuously at all times that the stationary RICE is operating. A monitoring malfunction is any sudden, infrequent, not reasonably preventable failure of the monitoring to provide valid data. Monitoring failures that are caused in part by poor maintenance or careless operation are not malfunctions.

(c) You may not use data recorded during monitoring malfunctions, associated repairs, and required quality assurance or control activities in data averages and calculations used to report emission or operating levels. You must, however, use all the valid data collected during all other periods.

[69 FR 33506, June 15, 2004, as amended at 76 FR 12867, Mar. 9, 2011]

§ 63.6640 How do I demonstrate continuous compliance with the emission limitations, operating limitations, and other requirements?

(a) You must demonstrate continuous compliance with each emission limitation, operating limitation, and other requirements in Tables 1a and 1b, Tables 2a and 2b, Table 2c, and Table 2d to this subpart that apply to you according to methods specified in Table 6 to this subpart.

(b) You must report each instance in which you did not meet each emission limitation or operating limitation in Tables 1a and 1b, Tables 2a and 2b, Table 2c, and Table 2d to this subpart that apply to you. These instances are deviations from the emission and operating limitations in this subpart. These deviations must be reported according to the requirements in § 63.6650. If you change your catalyst, you must reestablish the values of the operating parameters measured during the initial performance test. When you reestablish the values of your operating parameters, you must also conduct a performance test to demonstrate that you are meeting the required emission limitation applicable to your stationary RICE.

(c) The annual compliance demonstration required for existing non-emergency 4SLB and 4SRB stationary RICE with a site rating of more than 500 HP located at an area source of HAP that are not remote stationary RICE and that are operated more than 24 hours per calendar year must be conducted according to the following requirements:

(1) The compliance demonstration must consist of at least one test run.

(2) Each test run must be of at least 15 minute duration, except that each test conducted using the method in appendix A to this subpart must consist of at least one measurement cycle and include at least 2 minutes of test data phase measurement.

(3) If you are demonstrating compliance with the CO concentration or CO percent reduction requirement, you must measure CO emissions using one of the CO measurement methods specified in Table 4 of this subpart, or using appendix A to this subpart.

(4) If you are demonstrating compliance with the THC percent reduction requirement, you must measure THC emissions using Method 25A, reported as propane, of 40 CFR part 60, appendix A.

(5) You must measure O_2 using one of the O_2 measurement methods specified in Table 4 of this subpart. Measurements to determine O_2 concentration must be made at the same time as the measurements for CO or THC concentration.

(6) If you are demonstrating compliance with the CO or THC percent reduction requirement, you must measure CO or THC emissions and O_2 emissions simultaneously at the inlet and outlet of the control device.

(7) If the results of the annual compliance demonstration show that the emissions exceed the levels specified in Table 6 of this subpart, the stationary RICE must be shut down as soon as safely possible, and appropriate corrective action must be taken (e.g., repairs, catalyst cleaning, catalyst replacement). The stationary RICE must be retested within 7 days of being restarted and the emissions must meet the levels specified in Table 6 of this subpart. If the retest shows that the emissions continue to exceed the specified levels, the stationary RICE must again be shut down as soon as safely possible, and the stationary RICE may not operate, except for purposes of startup and testing, until the owner/operator demonstrates through testing that the emissions do not exceed the levels specified in Table 6 of this subpart.

(d) For new, reconstructed, and rebuilt stationary RICE, deviations from the emission or operating limitations that occur during the first 200 hours of operation from engine startup (engine burn-in period) are not violations. Rebuilt stationary RICE means a stationary RICE that has been rebuilt as that term is defined in 40 CFR 94.11(a).

(e) You must also report each instance in which you did not meet the requirements in Table 8 to this subpart that apply to you. If you own or operate a new or reconstructed stationary RICE with a site rating of less than or equal to 500 brake HP located at a major source of HAP emissions (except new or reconstructed 4SLB engines greater than or equal to 250 and less than or equal to 500 brake HP), a new or reconstructed stationary RICE located at an area source of HAP emissions, or any of the following RICE with a site rating of more than 500 brake HP located at a major source of HAP emissions, you do not need to comply with the requirements in Table 8 to this subpart: An existing 2SLB stationary RICE, an existing 4SLB stationary RICE, an existing emergency stationary RICE, an existing limited use stationary RICE, or an existing stationary RICE which fires landfill gas or digester gas equivalent to 10 percent or more of the gross heat input on an annual basis. If you own or operate any of the following RICE with a site rating of more than 500 brake HP located at a major source of HAP emissions, you do not need to comply with the requirements in Table 8 to this subpart, except for the initial notification requirements: a new or reconstructed stationary RICE that combusts landfill gas or digester gas equivalent to 10 percent or more of the gross heat input on an annual basis, a new or reconstructed emergency stationary RICE, or a new or reconstructed limited use stationary RICE.

(f) If you own or operate an emergency stationary RICE, you must operate the emergency stationary RICE according to the requirements in paragraphs (f)(1) through (4) of this section. In order for the engine to be considered an emergency stationary RICE under this subpart, any operation other than emergency operation, maintenance and testing, emergency demand response, and operation in non-emergency situations for 50 hours per year, as described in paragraphs (f)(1) through (4) of this section, is prohibited. If you do not operate the engine according to the requirements in paragraphs (f)(1) through (4) of this section, the engine will not be considered an emergency engine under this subpart and must meet all requirements for non-emergency engines.

(1) There is no time limit on the use of emergency stationary RICE in emergency situations.

(2) You may operate your emergency stationary RICE for any combination of the purposes specified in paragraphs (f)(2)(i) through (iii) of this section for a maximum of 100 hours per calendar year. Any operation for non-emergency situations as allowed by paragraphs (f)(3) and (4) of this section counts as part of the 100 hours per calendar year allowed by this paragraph (f)(2).

(i) Emergency stationary RICE may be operated for maintenance checks and readiness testing, provided that the tests are recommended by federal, state or local government, the manufacturer, the vendor, the regional

transmission organization or equivalent balancing authority and transmission operator, or the insurance company associated with the engine. The owner or operator may petition the Administrator for approval of additional hours to be used for maintenance checks and readiness testing, but a petition is not required if the owner or operator maintains records indicating that federal, state, or local standards require maintenance and testing of emergency RICE beyond 100 hours per calendar year.

(ii) Emergency stationary RICE may be operated for emergency demand response for periods in which the Reliability Coordinator under the North American Electric Reliability Corporation (NERC) Reliability Standard EOP-002-3, Capacity and Energy Emergencies (incorporated by reference, see § 63.14), or other authorized entity as determined by the Reliability Coordinator, has declared an Energy Emergency Alert Level 2 as defined in the NERC Reliability Standard EOP-002-3.

(iii) Emergency stationary RICE may be operated for periods where there is a deviation of voltage or frequency of 5 percent or greater below standard voltage or frequency.

(3) Emergency stationary RICE located at major sources of HAP may be operated for up to 50 hours per calendar year in non-emergency situations. The 50 hours of operation in non-emergency situations are counted as part of the 100 hours per calendar year for maintenance and testing and emergency demand response provided in paragraph (f)(2) of this section. The 50 hours per year for non-emergency situations cannot be used for peak shaving or non-emergency demand response, or to generate income for a facility to supply power to an electric grid or otherwise supply power as part of a financial arrangement with another entity.

(4) Emergency stationary RICE located at area sources of HAP may be operated for up to 50 hours per calendar year in non-emergency situations. The 50 hours of operation in non-emergency situations are counted as part of the 100 hours per calendar year for maintenance and testing and emergency demand response provided in paragraph (f)(2) of this section. Except as provided in paragraphs (f)(4)(i) and (ii) of this section, the 50 hours per year for non-emergency situations cannot be used for peak shaving or non-emergency demand response, or to generate income for a facility to an electric grid or otherwise supply power as part of a financial arrangement with another entity.

(i) Prior to May 3, 2014, the 50 hours per year for non-emergency situations can be used for peak shaving or non-emergency demand response to generate income for a facility, or to otherwise supply power as part of a financial arrangement with another entity if the engine is operated as part of a peak shaving (load management program) with the local distribution system operator and the power is provided only to the facility itself or to support the local distribution system.

(ii) The 50 hours per year for non-emergency situations can be used to supply power as part of a financial arrangement with another entity if all of the following conditions are met:

(A) The engine is dispatched by the local balancing authority or local transmission and distribution system operator.

(B) The dispatch is intended to mitigate local transmission and/or distribution limitations so as to avert potential voltage collapse or line overloads that could lead to the interruption of power supply in a local area or region.

(C) The dispatch follows reliability, emergency operation or similar protocols that follow specific NERC, regional, state, public utility commission or local standards or guidelines.

(D) The power is provided only to the facility itself or to support the local transmission and distribution system.

(E) The owner or operator identifies and records the entity that dispatches the engine and the specific NERC, regional, state, public utility commission or local standards or guidelines that are being followed for dispatching the engine. The local balancing authority or local transmission and distribution system operator may keep these records on behalf of the engine owner or operator.

[69 FR 33506, June 15, 2004, as amended at 71 FR 20467, Apr. 20, 2006; 73 FR 3606, Jan. 18, 2008; 75 FR 9676, Mar. 3, 2010; 75 FR 51591, Aug. 20, 2010; 78 FR 6704, Jan. 30, 2013]

Notifications, Reports, and Records

§ 63.6645 What notifications must I submit and when?

(a) You must submit all of the notifications in §§ 63.7(b) and (c), 63.8(e), (f)(4) and (f)(6), 63.9(b) through (e), and (g) and (h) that apply to you by the dates specified if you own or operate any of the following;

(1) An existing stationary RICE with a site rating of less than or equal to 500 brake HP located at a major source of HAP emissions.

(2) An existing stationary RICE located at an area source of HAP emissions.

(3) A stationary RICE with a site rating of more than 500 brake HP located at a major source of HAP emissions.

(4) A new or reconstructed 4SLB stationary RICE with a site rating of greater than or equal to 250 HP located at a major source of HAP emissions.

(5) This requirement does not apply if you own or operate an existing stationary RICE less than 100 HP, an existing stationary emergency RICE, or an existing stationary RICE that is not subject to any numerical emission standards.

(b) As specified in § 63.9(b)(2), if you start up your stationary RICE with a site rating of more than 500 brake HP located at a major source of HAP emissions before the effective date of this subpart, you must submit an Initial Notification not later than December 13, 2004.

(c) If you start up your new or reconstructed stationary RICE with a site rating of more than 500 brake HP located at a major source of HAP emissions on or after August 16, 2004, you must submit an Initial Notification not later than 120 days after you become subject to this subpart.

(d) As specified in § 63.9(b)(2), if you start up your stationary RICE with a site rating of equal to or less than 500 brake HP located at a major source of HAP emissions before the effective date of this subpart and you are required to submit an initial notification, you must submit an Initial Notification not later than July 16, 2008.

(e) If you start up your new or reconstructed stationary RICE with a site rating of equal to or less than 500 brake HP located at a major source of HAP emissions on or after March 18, 2008 and you are required to submit an initial notification, you must submit an Initial Notification not later than 120 days after you become subject to this subpart.

(f) If you are required to submit an Initial Notification but are otherwise not affected by the requirements of this subpart, in accordance with § 63.6590(b), your notification should include the information in § 63.9(b)(2)(i) through (v), and a statement that your stationary RICE has no additional requirements and explain the basis of the exclusion (for example, that it operates exclusively as an emergency stationary RICE if it has a site rating of more than 500 brake HP located at a major source of HAP emissions).

(g) If you are required to conduct a performance test, you must submit a Notification of Intent to conduct a performance test at least 60 days before the performance test is scheduled to begin as required in § 63.7(b)(1).

(h) If you are required to conduct a performance test or other initial compliance demonstration as specified in Tables 4 and 5 to this subpart, you must submit a Notification of Compliance Status according to § 63.9(h)(2)(ii).

(1) For each initial compliance demonstration required in Table 5 to this subpart that does not include a performance test, you must submit the Notification of Compliance Status before the close of business on the 30th day following the completion of the initial compliance demonstration.

(2) For each initial compliance demonstration required in Table 5 to this subpart that includes a performance test conducted according to the requirements in Table 3 to this subpart, you must submit the Notification of Compliance Status, including the performance test results, before the close of business on the 60th day following the completion of the performance test according to § 63.10(d)(2).

(i) If you own or operate an existing non-emergency CI RICE with a site rating of more than 300 HP located at an area source of HAP emissions that is certified to the Tier 1 or Tier 2 emission standards in Table 1 of 40 CFR 89.112 and subject to an enforceable state or local standard requiring engine replacement and you intend to meet management practices rather than emission limits, as specified in § 63.6603(d), you must submit a notification by March 3, 2013, stating that you intend to use the provision in § 63.6603(d) and identifying the state or local regulation that the engine is subject to.

[73 FR 3606, Jan. 18, 2008, as amended at 75 FR 9677, Mar. 3, 2010; 75 FR 51591, Aug. 20, 2010; 78 FR 6705, Jan. 30, 2013]

§ 63.6650 What reports must I submit and when?

(a) You must submit each report in Table 7 of this subpart that applies to you.

(b) Unless the Administrator has approved a different schedule for submission of reports under § 63.10(a), you must submit each report by the date in Table 7 of this subpart and according to the requirements in paragraphs (b)(1) through (b)(9) of this section.

(1) For semiannual Compliance reports, the first Compliance report must cover the period beginning on the compliance date that is specified for your affected source in § 63.6595 and ending on June 30 or December 31, whichever date is the first date following the end of the first calendar half after the compliance date that is specified for your source in § 63.6595.

(2) For semiannual Compliance reports, the first Compliance report must be postmarked or delivered no later than July 31 or January 31, whichever date follows the end of the first calendar half after the compliance date that is specified for your affected source in § 63.6595.

(3) For semiannual Compliance reports, each subsequent Compliance report must cover the semiannual reporting period from January 1 through June 30 or the semiannual reporting period from July 1 through December 31.

(4) For semiannual Compliance reports, each subsequent Compliance report must be postmarked or delivered no later than July 31 or January 31, whichever date is the first date following the end of the semiannual reporting period.

(5) For each stationary RICE that is subject to permitting regulations pursuant to 40 CFR part 70 or 71, and if the permitting authority has established dates for submitting semiannual reports pursuant to 40 CFR 70.6(a)(3)(iii)(A) or 40 CFR 71.6 (a)(3)(iii)(A), you may submit the first and subsequent Compliance reports according to the dates the permitting authority has established instead of according to the dates in paragraphs (b)(1) through (b)(4) of this section.

(6) For annual Compliance reports, the first Compliance report must cover the period beginning on the compliance date that is specified for your affected source in § 63.6595 and ending on December 31.

(7) For annual Compliance reports, the first Compliance report must be postmarked or delivered no later than January 31 following the end of the first calendar year after the compliance date that is specified for your affected source in § 63.6595.

(8) For annual Compliance reports, each subsequent Compliance report must cover the annual reporting period from January 1 through December 31.

(9) For annual Compliance reports, each subsequent Compliance report must be postmarked or delivered no later than January 31.

(c) The Compliance report must contain the information in paragraphs (c)(1) through (6) of this section.

(1) Company name and address.

(2) Statement by a responsible official, with that official's name, title, and signature, certifying the accuracy of the content of the report.

(3) Date of report and beginning and ending dates of the reporting period.

(4) If you had a malfunction during the reporting period, the compliance report must include the number, duration, and a brief description for each type of malfunction which occurred during the reporting period and which caused or may have caused any applicable emission limitation to be exceeded. The report must also include a description of actions taken by an owner or operator during a malfunction of an affected source to minimize emissions in accordance with § 63.6605(b), including actions taken to correct a malfunction.

(5) If there are no deviations from any emission or operating limitations that apply to you, a statement that there were no deviations from the emission or operating limitations during the reporting period.

(6) If there were no periods during which the continuous monitoring system (CMS), including CEMS and CPMS, was out-of-control, as specified in § 63.8(c)(7), a statement that there were no periods during which the CMS was out-of-control during the reporting period.

(d) For each deviation from an emission or operating limitation that occurs for a stationary RICE where you are not using a CMS to comply with the emission or operating limitations in this subpart, the Compliance report must contain the information in paragraphs (c)(1) through (4) of this section and the information in paragraphs (d)(1) and (2) of this section.

(1) The total operating time of the stationary RICE at which the deviation occurred during the reporting period.

(2) Information on the number, duration, and cause of deviations (including unknown cause, if applicable), as applicable, and the corrective action taken.

(e) For each deviation from an emission or operating limitation occurring for a stationary RICE where you are using a CMS to comply with the emission and operating limitations in this subpart, you must include information in paragraphs (c)(1) through (4) and (e)(1) through (12) of this section.

(1) The date and time that each malfunction started and stopped.

(2) The date, time, and duration that each CMS was inoperative, except for zero (low-level) and high-level checks.

(3) The date, time, and duration that each CMS was out-of-control, including the information in § 63.8(c)(8).

(4) The date and time that each deviation started and stopped, and whether each deviation occurred during a period of malfunction or during another period.

(5) A summary of the total duration of the deviation during the reporting period, and the total duration as a percent of the total source operating time during that reporting period.

(6) A breakdown of the total duration of the deviations during the reporting period into those that are due to control equipment problems, process problems, other known causes, and other unknown causes.

(7) A summary of the total duration of CMS downtime during the reporting period, and the total duration of CMS downtime as a percent of the total operating time of the stationary RICE at which the CMS downtime occurred during that reporting period.

(8) An identification of each parameter and pollutant (CO or formaldehyde) that was monitored at the stationary RICE.

(9) A brief description of the stationary RICE.

(10) A brief description of the CMS.

(11) The date of the latest CMS certification or audit.

(12) A description of any changes in CMS, processes, or controls since the last reporting period.

(f) Each affected source that has obtained a title V operating permit pursuant to 40 CFR part 70 or 71 must report all deviations as defined in this subpart in the semiannual monitoring report required by 40 CFR 70.6 (a)(3)(iii)(A) or 40 CFR 71.6(a)(3)(iii)(A). If an affected source submits a Compliance report pursuant to Table 7 of this subpart along with, or as part of, the semiannual monitoring report required by 40 CFR 70.6(a)(3)(iii)(A) or 40 CFR 71.6(a)(3)(iii)(A), and the Compliance report includes all required information concerning deviations from any emission or operating limitation in this subpart, submission of the Compliance report shall be deemed to satisfy any obligation to report the same deviations in the semiannual monitoring report. However, submission of a Compliance report shall not otherwise affect any obligation the affected source may have to report deviations from permit requirements to the permit authority.

(g) If you are operating as a new or reconstructed stationary RICE which fires landfill gas or digester gas equivalent to 10 percent or more of the gross heat input on an annual basis, you must submit an annual report according to Table 7 of this subpart by the date specified unless the Administrator has approved a different schedule, according to the information described in paragraphs (b)(1) through (b)(5) of this section. You must report the data specified in (g)(1) through (g)(3) of this section.

(1) Fuel flow rate of each fuel and the heating values that were used in your calculations. You must also demonstrate that the percentage of heat input provided by landfill gas or digester gas is equivalent to 10 percent or more of the total fuel consumption on an annual basis.

(2) The operating limits provided in your federally enforceable permit, and any deviations from these limits.

(3) Any problems or errors suspected with the meters.

(h) If you own or operate an emergency stationary RICE with a site rating of more than 100 brake HP that operates or is contractually obligated to be available for more than 15 hours per calendar year for the purposes specified in § 63.6640(f)(2)(ii) and (iii) or that operates for the purpose specified in § 63.6640(f)(4)(ii), you must submit an annual report according to the requirements in paragraphs (h)(1) through (3) of this section.

(1) The report must contain the following information:

(i) Company name and address where the engine is located.

(ii) Date of the report and beginning and ending dates of the reporting period.

(iii) Engine site rating and model year.

(iv) Latitude and longitude of the engine in decimal degrees reported to the fifth decimal place.

(v) Hours operated for the purposes specified in § 63.6640(f)(2)(ii) and (iii), including the date, start time, and end time for engine operation for the purposes specified in § 63.6640(f)(2)(ii) and (iii).

(vi) Number of hours the engine is contractually obligated to be available for the purposes specified in § 63.6640(f)(2)(ii) and (iii).

(vii) Hours spent for operation for the purpose specified in § 63.6640(f)(4)(ii), including the date, start time, and end time for engine operation for the purposes specified in § 63.6640(f)(4)(ii). The report must also identify the entity that dispatched the engine and the situation that necessitated the dispatch of the engine.

(viii) If there were no deviations from the fuel requirements in § 63.6604 that apply to the engine (if any), a statement that there were no deviations from the fuel requirements during the reporting period.

(ix) If there were deviations from the fuel requirements in § 63.6604 that apply to the engine (if any), information on the number, duration, and cause of deviations, and the corrective action taken.

(2) The first annual report must cover the calendar year 2015 and must be submitted no later than March 31, 2016. Subsequent annual reports for each calendar year must be submitted no later than March 31 of the following calendar year.

(3) The annual report must be submitted electronically using the subpart specific reporting form in the Compliance and Emissions Data Reporting Interface (CEDRI) that is accessed through EPA's Central Data Exchange (CDX) (*www.epa.gov/cdx*). However, if the reporting form specific to this subpart is not available in CEDRI at the time that the report is due, the written report must be submitted to the Administrator at the appropriate address listed in § 63.13.

[69 FR 33506, June 15, 2004, as amended at 75 FR 9677, Mar. 3, 2010; 78 FR 6705, Jan. 30, 2013]

§ 63.6655 What records must I keep?

(a) If you must comply with the emission and operating limitations, you must keep the records described in paragraphs (a)(1) through (a)(5), (b)(1) through (b)(3) and (c) of this section.

(1) A copy of each notification and report that you submitted to comply with this subpart, including all documentation supporting any Initial Notification or Notification of Compliance Status that you submitted, according to the requirement in § 63.10(b)(2)(xiv).

(2) Records of the occurrence and duration of each malfunction of operation (*i.e.,* process equipment) or the air pollution control and monitoring equipment.

(3) Records of performance tests and performance evaluations as required in § 63.10(b)(2)(viii).

(4) Records of all required maintenance performed on the air pollution control and monitoring equipment.

(5) Records of actions taken during periods of malfunction to minimize emissions in accordance with § 63.6605(b), including corrective actions to restore malfunctioning process and air pollution control and monitoring equipment to its normal or usual manner of operation.

(b) For each CEMS or CPMS, you must keep the records listed in paragraphs (b)(1) through (3) of this section.

(1) Records described in § 63.10(b)(2)(vi) through (xi).

(2) Previous (*i.e.,* superseded) versions of the performance evaluation plan as required in § 63.8(d)(3).

(3) Requests for alternatives to the relative accuracy test for CEMS or CPMS as required in § 63.8(f)(6)(i), if applicable.

(c) If you are operating a new or reconstructed stationary RICE which fires landfill gas or digester gas equivalent to 10 percent or more of the gross heat input on an annual basis, you must keep the records of your daily fuel usage monitors.

(d) You must keep the records required in Table 6 of this subpart to show continuous compliance with each emission or operating limitation that applies to you.

(e) You must keep records of the maintenance conducted on the stationary RICE in order to demonstrate that you operated and maintained the stationary RICE and after-treatment control device (if any) according to your own maintenance plan if you own or operate any of the following stationary RICE;

(1) An existing stationary RICE with a site rating of less than 100 brake HP located at a major source of HAP emissions.

(2) An existing stationary emergency RICE.

(3) An existing stationary RICE located at an area source of HAP emissions subject to management practices as shown in Table 2d to this subpart.

(f) If you own or operate any of the stationary RICE in paragraphs (f)(1) through (2) of this section, you must keep records of the hours of operation of the engine that is recorded through the non-resettable hour meter. The owner or operator must document how many hours are spent for emergency operation, including what classified the operation as emergency and how many hours are spent for non-emergency operation. If the engine is used for the purposes specified in § 63.6640(f)(2)(ii) or (iii) or § 63.6640(f)(4)(ii), the owner or operator must keep records of the notification of the emergency situation, and the date, start time, and end time of engine operation for these purposes.

(1) An existing emergency stationary RICE with a site rating of less than or equal to 500 brake HP located at a major source of HAP emissions that does not meet the standards applicable to non-emergency engines.

(2) An existing emergency stationary RICE located at an area source of HAP emissions that does not meet the standards applicable to non-emergency engines.

[69 FR 33506, June 15, 2004, as amended at 75 FR 9678, Mar. 3, 2010; 75 FR 51592, Aug. 20, 2010; 78 FR 6706, Jan. 30, 2013]

§ 63.6660 In what form and how long must I keep my records?

(a) Your records must be in a form suitable and readily available for expeditious review according to § 63.10(b)(1).

(b) As specified in § 63.10(b)(1), you must keep each record for 5 years following the date of each occurrence, measurement, maintenance, corrective action, report, or record.

(c) You must keep each record readily accessible in hard copy or electronic form for at least 5 years after the date of each occurrence, measurement, maintenance, corrective action, report, or record, according to § 63.10(b)(1).

[69 FR 33506, June 15, 2004, as amended at 75 FR 9678, Mar. 3, 2010]

Other Requirements and Information

§ 63.6665 What parts of the General Provisions apply to me?

Table 8 to this subpart shows which parts of the General Provisions in §§ 63.1 through 63.15 apply to you. If you own or operate a new or reconstructed stationary RICE with a site rating of less than or equal to 500 brake HP located at a major source of HAP emissions (except new or reconstructed 4SLB engines greater than or equal to 250 and less than or equal to 500 brake HP), a new or reconstructed stationary RICE located at an area source of HAP emissions, or any of the following RICE with a site rating of more than 500 brake HP located at a major source of HAP emissions, you do not need to comply with any of the requirements of the General Provisions specified in Table 8: An existing 2SLB stationary RICE, an existing 4SLB stationary RICE, an existing stationary RICE that combusts landfill or digester gas equivalent to 10 percent or more of the gross heat input on an annual basis, an existing emergency stationary RICE, or an existing limited use stationary RICE. If you own or operate any of the following RICE with a site rating of more than 500 brake HP located at a major source of HAP emissions, you do not need to comply with the requirements in the General Provisions specified in Table 8 except for the initial notification requirements: A new stationary RICE that combusts landfill gas or digester gas equivalent to 10 percent or more of the gross heat input on an annual basis, a new emergency stationary RICE, or a new limited use stationary RICE.

[75 FR 9678, Mar. 3, 2010]

§ 63.6670 Who implements and enforces this subpart?

(a) This subpart is implemented and enforced by the U.S. EPA, or a delegated authority such as your State, local, or tribal agency. If the U.S. EPA Administrator has delegated authority to your State, local, or tribal agency, then that agency (as well as the U.S. EPA) has the authority to implement and enforce this subpart. You should contact your U.S. EPA Regional Office to find out whether this subpart is delegated to your State, local, or tribal agency.

(b) In delegating implementation and enforcement authority of this subpart to a State, local, or tribal agency under 40 CFR part 63, subpart E, the authorities contained in paragraph (c) of this section are retained by the Administrator of the U.S. EPA and are not transferred to the State, local, or tribal agency.

(c) The authorities that will not be delegated to State, local, or tribal agencies are:

(1) Approval of alternatives to the non-opacity emission limitations and operating limitations in § 63.6600 under § 63.6(g).

(2) Approval of major alternatives to test methods under § 63.7(e)(2)(ii) and (f) and as defined in § 63.90.

(3) Approval of major alternatives to monitoring under § 63.8(f) and as defined in § 63.90.

(4) Approval of major alternatives to recordkeeping and reporting under § 63.10(f) and as defined in § 63.90.

(5) Approval of a performance test which was conducted prior to the effective date of the rule, as specified in § 63.6610(b).

§ 63.6675 What definitions apply to this subpart?

Terms used in this subpart are defined in the Clean Air Act (CAA); in 40 CFR 63.2, the General Provisions of this part; and in this section as follows:

Alaska Railbelt Grid means the service areas of the six regulated public utilities that extend from Fairbanks to Anchorage and the Kenai Peninsula. These utilities are Golden Valley Electric Association; Chugach Electric Association; Matanuska Electric Association; Homer Electric Association; Anchorage Municipal Light & Power; and the City of Seward Electric System.

Area source means any stationary source of HAP that is not a major source as defined in part 63.

Associated equipment as used in this subpart and as referred to in section 112(n)(4) of the CAA, means equipment associated with an oil or natural gas exploration or production well, and includes all equipment from the well bore to the point of custody transfer, except glycol dehydration units, storage vessels with potential for flash emissions, combustion turbines, and stationary RICE.

Backup power for renewable energy means an engine that provides backup power to a facility that generates electricity from renewable energy resources, as that term is defined in Alaska Statute 42.45.045(l)(5) (incorporated by reference, see § 63.14).

Black start engine means an engine whose only purpose is to start up a combustion turbine.

CAA means the Clean Air Act (42 U.S.C. 7401 *et seq.,* as amended by Public Law 101-549, 104 Stat. 2399).

Commercial emergency stationary RICE means an emergency stationary RICE used in commercial establishments such as office buildings, hotels, stores, telecommunications facilities, restaurants, financial institutions such as banks, doctor's offices, and sports and performing arts facilities.

Compression ignition means relating to a type of stationary internal combustion engine that is not a spark ignition engine.

Custody transfer means the transfer of hydrocarbon liquids or natural gas: After processing and/or treatment in the producing operations, or from storage vessels or automatic transfer facilities or other such equipment, including product loading racks, to pipelines or any other forms of transportation. For the purposes of this subpart, the point at which such liquids or natural gas enters a natural gas processing plant is a point of custody transfer.

Deviation means any instance in which an affected source subject to this subpart, or an owner or operator of such a source:

(1) Fails to meet any requirement or obligation established by this subpart, including but not limited to any emission limitation or operating limitation;

(2) Fails to meet any term or condition that is adopted to implement an applicable requirement in this subpart and that is included in the operating permit for any affected source required to obtain such a permit; or

(3) Fails to meet any emission limitation or operating limitation in this subpart during malfunction, regardless or whether or not such failure is permitted by this subpart.

(4) Fails to satisfy the general duty to minimize emissions established by § 63.6(e)(1)(i).

Diesel engine means any stationary RICE in which a high boiling point liquid fuel injected into the combustion chamber ignites when the air charge has been compressed to a temperature sufficiently high for auto-ignition. This process is also known as compression ignition.

Diesel fuel means any liquid obtained from the distillation of petroleum with a boiling point of approximately 150 to 360 degrees Celsius. One commonly used form is fuel oil number 2. Diesel fuel also includes any non-distillate fuel with comparable physical and chemical properties (*e.g.* biodiesel) that is suitable for use in compression ignition engines.

Digester gas means any gaseous by-product of wastewater treatment typically formed through the anaerobic decomposition of organic waste materials and composed principally of methane and CO_2 .

Dual-fuel engine means any stationary RICE in which a liquid fuel (typically diesel fuel) is used for compression ignition and gaseous fuel (typically natural gas) is used as the primary fuel.

Emergency stationary RICE means any stationary reciprocating internal combustion engine that meets all of the criteria in paragraphs (1) through (3) of this definition. All emergency stationary RICE must comply with the requirements specified in § 63.6640(f) in order to be considered emergency stationary RICE. If the engine does not comply with the requirements specified in § 63.6640(f), then it is not considered to be an emergency stationary RICE under this subpart.

(1) The stationary RICE is operated to provide electrical power or mechanical work during an emergency situation. Examples include stationary RICE used to produce power for critical networks or equipment (including power supplied to portions of a facility) when electric power from the local utility (or the normal power source, if the facility runs on its own power production) is interrupted, or stationary RICE used to pump water in the case of fire or flood, etc.

(2) The stationary RICE is operated under limited circumstances for situations not included in paragraph (1) of this definition, as specified in § 63.6640(f).

(3) The stationary RICE operates as part of a financial arrangement with another entity in situations not included in paragraph (1) of this definition only as allowed in § 63.6640(f)(2)(ii) or (iii) and § 63.6640(f)(4)(i) or (ii).

Engine startup means the time from initial start until applied load and engine and associated equipment reaches steady state or normal operation. For stationary engine with catalytic controls, engine startup means the time from initial start until applied load and engine and associated equipment, including the catalyst, reaches steady state or normal operation.

Four-stroke engine means any type of engine which completes the power cycle in two crankshaft revolutions, with intake and compression strokes in the first revolution and power and exhaust strokes in the second revolution.

Gaseous fuel means a material used for combustion which is in the gaseous state at standard atmospheric temperature and pressure conditions.

Gasoline means any fuel sold in any State for use in motor vehicles and motor vehicle engines, or nonroad or stationary engines, and commonly or commercially known or sold as gasoline.

Glycol dehydration unit means a device in which a liquid glycol (including, but not limited to, ethylene glycol, diethylene glycol, or triethylene glycol) absorbent directly contacts a natural gas stream and absorbs water in a contact tower or absorption column (absorber). The glycol contacts and absorbs water vapor and other gas stream constituents from the natural gas and becomes “rich” glycol. This glycol is then regenerated in the glycol dehydration unit reboiler. The “lean” glycol is then recycled.

Hazardous air pollutants (HAP) means any air pollutants listed in or pursuant to section 112(b) of the CAA.

Institutional emergency stationary RICE means an emergency stationary RICE used in institutional establishments such as medical centers, nursing homes, research centers, institutions of higher education, correctional facilities, elementary and secondary schools, libraries, religious establishments, police stations, and fire stations.

ISO standard day conditions means 288 degrees Kelvin (15 degrees Celsius), 60 percent relative humidity and 101.3 kilopascals pressure.

Landfill gas means a gaseous by-product of the land application of municipal refuse typically formed through the anaerobic decomposition of waste materials and composed principally of methane and CO_2 .

Lean burn engine means any two-stroke or four-stroke spark ignited engine that does not meet the definition of a rich burn engine.

Limited use stationary RICE means any stationary RICE that operates less than 100 hours per year.

Liquefied petroleum gas means any liquefied hydrocarbon gas obtained as a by-product in petroleum refining of natural gas production.

Liquid fuel means any fuel in liquid form at standard temperature and pressure, including but not limited to diesel, residual/crude oil, kerosene/naphtha (jet fuel), and gasoline.

Major Source, as used in this subpart, shall have the same meaning as in § 63.2, except that:

(1) Emissions from any oil or gas exploration or production well (with its associated equipment (as defined in this section)) and emissions from any pipeline compressor station or pump station shall not be aggregated with emissions from other similar units, to determine whether such emission points or stations are major sources, even when emission points are in a contiguous area or under common control;

(2) For oil and gas production facilities, emissions from processes, operations, or equipment that are not part of the same oil and gas production facility, as defined in § 63.1271 of subpart HHH of this part, shall not be aggregated;

(3) For production field facilities, only HAP emissions from glycol dehydration units, storage vessel with the potential for flash emissions, combustion turbines and reciprocating internal combustion engines shall be aggregated for a major source determination; and

(4) Emissions from processes, operations, and equipment that are not part of the same natural gas transmission and storage facility, as defined in § 63.1271 of subpart HHH of this part, shall not be aggregated.

Malfunction means any sudden, infrequent, and not reasonably preventable failure of air pollution control equipment, process equipment, or a process to operate in a normal or usual manner which causes, or has the potential to cause, the emission limitations in an applicable standard to be exceeded. Failures that are caused in part by poor maintenance or careless operation are not malfunctions.

Natural gas means a naturally occurring mixture of hydrocarbon and non-hydrocarbon gases found in geologic formations beneath the Earth's surface, of which the principal constituent is methane. Natural gas may be field or pipeline quality.

Non-selective catalytic reduction (NSCR) means an add-on catalytic nitrogen oxides (NO_X) control device for rich burn engines that, in a two-step reaction, promotes the conversion of excess oxygen, NO_X , CO, and volatile organic compounds (VOC) into CO_2 , nitrogen, and water.

Oil and gas production facility as used in this subpart means any grouping of equipment where hydrocarbon liquids are processed, upgraded (*i.e.,* remove impurities or other constituents to meet contract specifications), or stored prior to the point of custody transfer; or where natural gas is processed, upgraded, or stored prior to entering the natural gas transmission and storage source category. For purposes of a major source determination, facility (including a building, structure, or installation) means oil and natural gas production and processing equipment that is located within the boundaries of an individual surface site as defined in this section. Equipment that is part of a facility will typically be located within close proximity to other equipment located at the same facility. Pieces of production equipment or groupings of equipment located on different oil and gas leases, mineral fee tracts, lease tracts, subsurface or surface unit areas, surface fee tracts, surface lease tracts, or separate surface sites, whether or not connected by a road, waterway, power line or pipeline, shall not be considered part of the same facility. Examples of facilities in the oil and natural gas production source category include, but are not limited to, well sites, satellite tank batteries, central tank batteries, a compressor station that transports natural gas to a natural gas processing plant, and natural gas processing plants.

Oxidation catalyst means an add-on catalytic control device that controls CO and VOC by oxidation.

Peaking unit or engine means any standby engine intended for use during periods of high demand that are not emergencies.

Percent load means the fractional power of an engine compared to its maximum manufacturer's design capacity at engine site conditions. Percent load may range between 0 percent to above 100 percent.

Potential to emit means the maximum capacity of a stationary source to emit a pollutant under its physical and operational design. Any physical or operational limitation on the capacity of the stationary source to emit a pollutant, including air pollution control equipment and restrictions on hours of operation or on the type or amount of material combusted, stored, or processed, shall be treated as part of its design if the limitation or the effect it would have on emissions is federally enforceable. For oil and natural gas production facilities subject to subpart HH of this part, the potential to emit provisions in § 63.760(a) may be used. For natural gas transmission and storage facilities subject to subpart HHH of this part, the maximum annual facility gas throughput for storage facilities may be determined according to § 63.1270(a)(1) and the maximum annual throughput for transmission facilities may be determined according to § 63.1270(a)(2).

Production field facility means those oil and gas production facilities located prior to the point of custody transfer.

Production well means any hole drilled in the earth from which crude oil, condensate, or field natural gas is extracted.

Propane means a colorless gas derived from petroleum and natural gas, with the molecular structure $C_3 H_8$.

Remote stationary RICE means stationary RICE meeting any of the following criteria:

(1) Stationary RICE located in an offshore area that is beyond the line of ordinary low water along that portion of the coast of the United States that is in direct contact with the open seas and beyond the line marking the seaward limit of inland waters.

(2) Stationary RICE located on a pipeline segment that meets both of the criteria in paragraphs (2)(i) and (ii) of this definition.

(i) A pipeline segment with 10 or fewer buildings intended for human occupancy and no buildings with four or more stories within 220 yards (200 meters) on either side of the centerline of any continuous 1-mile (1.6 kilometers) length of pipeline. Each separate dwelling unit in a multiple dwelling unit building is counted as a separate building intended for human occupancy.

(ii) The pipeline segment does not lie within 100 yards (91 meters) of either a building or a small, well-defined outside area (such as a playground, recreation area, outdoor theater, or other place of public assembly) that is occupied by 20 or more persons on at least 5 days a week for 10 weeks in any 12-month period. The days and weeks need not be consecutive. The building or area is considered occupied for a full day if it is occupied for any portion of the day.

(iii) For purposes of this paragraph (2), the term pipeline segment means all parts of those physical facilities through which gas moves in transportation, including but not limited to pipe, valves, and other appurtenance attached to pipe, compressor units, metering stations, regulator stations, delivery stations, holders, and fabricated assemblies. Stationary RICE located within 50 yards (46 meters) of the pipeline segment providing power for equipment on a pipeline segment are part of the pipeline segment. Transportation of gas means the gathering, transmission, or distribution of gas by pipeline, or the storage of gas. A building is intended for human occupancy if its primary use is for a purpose involving the presence of humans.

(3) Stationary RICE that are not located on gas pipelines and that have 5 or fewer buildings intended for human occupancy and no buildings with four or more stories within a 0.25 mile radius around the engine. A building is intended for human occupancy if its primary use is for a purpose involving the presence of humans.

Residential emergency stationary RICE means an emergency stationary RICE used in residential establishments such as homes or apartment buildings.

Responsible official means responsible official as defined in 40 CFR 70.2.

Rich burn engine means any four-stroke spark ignited engine where the manufacturer's recommended operating air/fuel ratio divided by the stoichiometric air/fuel ratio at full load conditions is less than or equal to 1.1. Engines originally manufactured as rich burn engines, but modified prior to December 19, 2002 with passive emission control technology for NO_X (such as pre-combustion chambers) will be considered lean burn engines. Also, existing engines where there are no manufacturer's recommendations regarding air/fuel ratio will be considered a rich burn engine if the excess oxygen content of the exhaust at full load conditions is less than or equal to 2 percent.

Site-rated HP means the maximum manufacturer's design capacity at engine site conditions.

Spark ignition means relating to either: A gasoline-fueled engine; or any other type of engine with a spark plug (or other sparking device) and with operating characteristics significantly similar to the theoretical Otto combustion cycle. Spark ignition engines usually use a throttle to regulate intake air flow to control power during normal operation. Dual-fuel engines in which a liquid fuel (typically diesel fuel) is used for CI and gaseous fuel (typically natural gas) is used as the primary fuel at an annual average ratio of less than 2 parts diesel fuel to 100 parts total fuel on an energy equivalent basis are spark ignition engines.

Stationary reciprocating internal combustion engine (RICE) means any reciprocating internal combustion engine which uses reciprocating motion to convert heat energy into mechanical work and which is not mobile. Stationary RICE differ from mobile RICE in that a stationary RICE is not a non-road engine as defined at 40 CFR 1068.30, and is not used to propel a motor vehicle or a vehicle used solely for competition.

Stationary RICE test cell/stand means an engine test cell/stand, as defined in subpart PPPPP of this part, that tests stationary RICE.

Stoichiometric means the theoretical air-to-fuel ratio required for complete combustion.

Storage vessel with the potential for flash emissions means any storage vessel that contains a hydrocarbon liquid with a stock tank gas-to-oil ratio equal to or greater than 0.31 cubic meters per liter and an American Petroleum

Institute gravity equal to or greater than 40 degrees and an actual annual average hydrocarbon liquid throughput equal to or greater than 79,500 liters per day. Flash emissions occur when dissolved hydrocarbons in the fluid evolve from solution when the fluid pressure is reduced.

Subpart means 40 CFR part 63, subpart ZZZZ.

Surface site means any combination of one or more graded pad sites, gravel pad sites, foundations, platforms, or the immediate physical location upon which equipment is physically affixed.

Two-stroke engine means a type of engine which completes the power cycle in single crankshaft revolution by combining the intake and compression operations into one stroke and the power and exhaust operations into a second stroke. This system requires auxiliary scavenging and inherently runs lean of stoichiometric.

[69 FR 33506, June 15, 2004, as amended at 71 FR 20467, Apr. 20, 2006; 73 FR 3607, Jan. 18, 2008; 75 FR 9679, Mar. 3, 2010; 75 FR 51592, Aug. 20, 2010; 76 FR 12867, Mar. 9, 2011; 78 FR 6706, Jan. 30, 2013]

Table 1 a to Subpart ZZZZ of Part 63—Emission Limitations for Existing, New, and Reconstructed Spark Ignition, 4SRB Stationary RICE > 500 HP Located at a Major Source of HAP Emissions

As stated in §§ 63.6600 and 63.6640, you must comply with the following emission limitations at 100 percent load plus or minus 10 percent for existing, new and reconstructed 4SRB stationary RICE >500 HP located at a major source of HAP emissions:

For each . . .	You must meet the following emission limitation, except during periods of startup . . .	During periods of startup you must . . .
1. 4SRB stationary RICE	a. Reduce formaldehyde emissions by 76 percent or more. If you commenced construction or reconstruction between December 19, 2002 and June 15, 2004, you may reduce formaldehyde emissions by 75 percent or more until June 15, 2007 or	Minimize the engine's time spent at idle and minimize the engine's startup time at startup to a period needed for appropriate and safe loading of the engine, not to exceed 30 minutes, after which time the non-startup emission limitations apply.[1]
	b. Limit the concentration of formaldehyde in the stationary RICE exhaust to 350 ppbvd or less at 15 percent O_2	

[1]Sources can petition the Administrator pursuant to the requirements of 40 CFR 63.6(g) for alternative work practices.

[75 FR 9679, Mar. 3, 2010, as amended at 75 FR 51592, Aug. 20, 2010]

Table 1 b to Subpart ZZZZ of Part 63—Operating Limitations for Existing, New, and Reconstructed SI 4SRB Stationary RICE >500 HP Located at a Major Source of HAP Emissions

As stated in §§ 63.6600, 63.6603, 63.6630 and 63.6640, you must comply with the following operating limitations for existing, new and reconstructed 4SRB stationary RICE >500 HP located at a major source of HAP emissions:

For each . . .	You must meet the following operating limitation, except during periods of startup . . .
1. existing, new and reconstructed 4SRB stationary RICE >500 HP located at a major source of HAP emissions complying with the requirement to reduce formaldehyde emissions by 76 percent or more (or by 75 percent or more, if applicable) and using NSCR; or existing, new and reconstructed 4SRB stationary RICE >500 HP located at a major source of HAP emissions complying with the requirement to limit the concentration of formaldehyde in the stationary RICE exhaust to 350 ppbvd or less at 15 percent $O_2$and using NSCR;	a. maintain your catalyst so that the pressure drop across the catalyst does not change by more than 2 inches of water at 100 percent load plus or minus 10 percent from the pressure drop across the catalyst measured during the initial performance test; and b. maintain the temperature of your stationary RICE exhaust so that the catalyst inlet temperature is greater than or equal to 750 °F and less than or equal to 1250 °F.[1]
2. existing, new and reconstructed 4SRB stationary RICE >500 HP located at a major source of HAP emissions complying with the requirement to reduce formaldehyde emissions by 76 percent or more (or by 75 percent or more, if applicable) and not using NSCR; or	Comply with any operating limitations approved by the Administrator.
existing, new and reconstructed 4SRB stationary RICE >500 HP located at a major source of HAP emissions complying with the requirement to limit the concentration of formaldehyde in the stationary RICE exhaust to 350 ppbvd or less at 15 percent $O_2$and not using NSCR.	

[1] Sources can petition the Administrator pursuant to the requirements of 40 CFR 63.8(f) for a different temperature range.

[78 FR 6706, Jan. 30, 2013]

Table 2 a to Subpart ZZZZ of Part 63—Emission Limitations for New and Reconstructed 2SLB and Compression Ignition Stationary RICE >500 HP and New and Reconstructed 4SLB Stationary RICE ≥250 HP Located at a Major Source of HAP Emissions

As stated in §§ 63.6600 and 63.6640, you must comply with the following emission limitations for new and reconstructed lean burn and new and reconstructed compression ignition stationary RICE at 100 percent load plus or minus 10 percent:

For each . . .	You must meet the following emission limitation, except during periods of startup . . .	During periods of startup you must . . .
1. 2SLB stationary RICE	a. Reduce CO emissions by 58 percent or more; or b. Limit concentration of formaldehyde in the stationary RICE exhaust to 12 ppmvd or less at 15 percent O_2. If you commenced construction or reconstruction between December 19, 2002 and June 15, 2004, you may limit concentration of formaldehyde to 17 ppmvd or less at 15 percent O_2until June 15, 2007	Minimize the engine's time spent at idle and minimize the engine's startup time at startup to a period needed for appropriate and safe loading of the engine, not to exceed 30 minutes, after which time the non-startup emission limitations apply.[1]
2. 4SLB stationary RICE	a. Reduce CO emissions by 93 percent or more; or	
	b. Limit concentration of formaldehyde in the stationary RICE exhaust to 14 ppmvd or less at 15 percent O_2	

For each . . .	You must meet the following emission limitation, except during periods of startup . . .	During periods of startup you must . . .
3. CI stationary RICE	a. Reduce CO emissions by 70 percent or more; or	
	b. Limit concentration of formaldehyde in the stationary RICE exhaust to 580 ppbvd or less at 15 percent O_2	

[1] Sources can petition the Administrator pursuant to the requirements of 40 CFR 63.6(g) for alternative work practices.

[75 FR 9680, Mar. 3, 2010]

Table 2 b to Subpart ZZZZ of Part 63—Operating Limitations for New and Reconstructed 2SLB and CI Stationary RICE >500 HP Located at a Major Source of HAP Emissions, New and Reconstructed 4SLB Stationary RICE ≥250 HP Located at a Major Source of HAP Emissions, Existing CI Stationary RICE >500 HP

As stated in §§ 63.6600, 63.6601, 63.6603, 63.6630, and 63.6640, you must comply with the following operating limitations for new and reconstructed 2SLB and CI stationary RICE >500 HP located at a major source of HAP emissions; new and reconstructed 4SLB stationary RICE ≥250 HP located at a major source of HAP emissions; and existing CI stationary RICE >500 HP:

For each . . .	You must meet the following operating limitation, except during periods of startup . . .
1. New and reconstructed 2SLB and CI stationary RICE >500 HP located at a major source of HAP emissions and new and reconstructed 4SLB stationary RICE ≥250 HP located at a major source of HAP emissions complying with the requirement to reduce CO emissions and using an oxidation catalyst; and New and reconstructed 2SLB and CI stationary RICE >500 HP located at a major source of HAP emissions and new and reconstructed 4SLB stationary RICE ≥250 HP located at a major source of HAP emissions complying with the requirement to limit the concentration of formaldehyde in the stationary RICE exhaust and using an oxidation catalyst.	a. maintain your catalyst so that the pressure drop across the catalyst does not change by more than 2 inches of water at 100 percent load plus or minus 10 percent from the pressure drop across the catalyst that was measured during the initial performance test; and b. maintain the temperature of your stationary RICE exhaust so that the catalyst inlet temperature is greater than or equal to 450 °F and less than or equal to 1350 °F.[1]
2. Existing CI stationary RICE >500 HP complying with the requirement to limit or reduce the concentration of CO in the stationary RICE exhaust and using an oxidation catalyst	a. maintain your catalyst so that the pressure drop across the catalyst does not change by more than 2 inches of water from the pressure drop across the catalyst that was measured during the initial performance test; and
	b. maintain the temperature of your stationary RICE exhaust so that the catalyst inlet temperature is greater than or equal to 450 °F and less than or equal to 1350 °F.[1]
3. New and reconstructed 2SLB and CI stationary RICE >500 HP located at a major source of HAP emissions and new and reconstructed 4SLB stationary RICE ≥250 HP located at a major source of HAP emissions complying with the requirement to reduce CO emissions and not using an oxidation catalyst; and	Comply with any operating limitations approved by the Administrator.
New and reconstructed 2SLB and CI stationary RICE >500 HP located at a major source of HAP emissions and new and reconstructed 4SLB stationary RICE ≥250 HP located at a major source of HAP emissions complying with the requirement to limit the concentration of formaldehyde in the stationary RICE exhaust and not using an oxidation catalyst; and	

For each . . .	You must meet the following operating limitation, except during periods of startup . . .
existing CI stationary RICE >500 HP complying with the requirement to limit or reduce the concentration of CO in the stationary RICE exhaust and not using an oxidation catalyst.	

[1] Sources can petition the Administrator pursuant to the requirements of 40 CFR 63.8(f) for a different temperature range.

[78 FR 6707, Jan. 30, 2013]

Table 2 c to Subpart ZZZZ of Part 63—Requirements for Existing Compression Ignition Stationary RICE Located at a Major Source of HAP Emissions and Existing Spark Ignition Stationary RICE ≤500 HP Located at a Major Source of HAP Emissions

As stated in §§ 63.6600, 63.6602, and 63.6640, you must comply with the following requirements for existing compression ignition stationary RICE located at a major source of HAP emissions and existing spark ignition stationary RICE ≤500 HP located at a major source of HAP emissions:

For each . . .	You must meet the following requirement, except during periods of startup . . .	During periods of startup you must . . .
1. Emergency stationary CI RICE and black start stationary CI RICE [1]	a. Change oil and filter every 500 hours of operation or annually, whichever comes first.[2] b. Inspect air cleaner every 1,000 hours of operation or annually, whichever comes first, and replace as necessary; c. Inspect all hoses and belts every 500 hours of operation or annually, whichever comes first, and replace as necessary.[3]	Minimize the engine's time spent at idle and minimize the engine's startup time at startup to a period needed for appropriate and safe loading of the engine, not to exceed 30 minutes, after which time the non-startup emission limitations apply.[3]
2. Non-Emergency, non-black start stationary CI RICE <100 HP	a. Change oil and filter every 1,000 hours of operation or annually, whichever comes first.[2] b. Inspect air cleaner every 1,000 hours of operation or annually, whichever comes first, and replace as necessary; c. Inspect all hoses and belts every 500 hours of operation or annually, whichever comes first, and replace as necessary.[3]	
3. Non-Emergency, non-black start CI stationary RICE 100≤HP≤300 HP	Limit concentration of CO in the stationary RICE exhaust to 230 ppmvd or less at 15 percent O_2.	

For each . . .	You must meet the following requirement, except during periods of startup . . .	During periods of startup you must . . .
4. Non-Emergency, non-black start CI stationary RICE 300<HP≤500	a. Limit concentration of CO in the stationary RICE exhaust to 49 ppmvd or less at 15 percent O_2; or b. Reduce CO emissions by 70 percent or more.	
5. Non-Emergency, non-black start stationary CI RICE >500 HP	a. Limit concentration of CO in the stationary RICE exhaust to 23 ppmvd or less at 15 percent O_2; or b. Reduce CO emissions by 70 percent or more.	
6. Emergency stationary SI RICE and black start stationary SI RICE.[1]	a. Change oil and filter every 500 hours of operation or annually, whichever comes first;[2] b. Inspect spark plugs every 1,000 hours of operation or annually, whichever comes first, and replace as necessary; c. Inspect all hoses and belts every 500 hours of operation or annually, whichever comes first, and replace as necessary.[3]	
7. Non-Emergency, non-black start stationary SI RICE <100 HP that are not 2SLB stationary RICE	a. Change oil and filter every 1,440 hours of operation or annually, whichever comes first;[2] b. Inspect spark plugs every 1,440 hours of operation or annually, whichever comes first, and replace as necessary;	
	c. Inspect all hoses and belts every 1,440 hours of operation or annually, whichever comes first, and replace as necessary.[3]	
8. Non-Emergency, non-black start 2SLB stationary SI RICE <100 HP	a. Change oil and filter every 4,320 hours of operation or annually, whichever comes first;[2] b. Inspect spark plugs every 4,320 hours of operation or annually, whichever comes first, and replace as necessary;	
	c. Inspect all hoses and belts every 4,320 hours of operation or annually, whichever comes first, and replace as necessary.[3]	

For each . . .	You must meet the following requirement, except during periods of startup . . .	During periods of startup you must . . .
9. Non-emergency, non-black start 2SLB stationary RICE 100≤HP≤500	Limit concentration of CO in the stationary RICE exhaust to 225 ppmvd or less at 15 percent O_2.	
10. Non-emergency, non-black start 4SLB stationary RICE 100≤HP≤500	Limit concentration of CO in the stationary RICE exhaust to 47 ppmvd or less at 15 percent O_2.	
11. Non-emergency, non-black start 4SRB stationary RICE 100≤HP≤500	Limit concentration of formaldehyde in the stationary RICE exhaust to 10.3 ppmvd or less at 15 percent O_2.	
12. Non-emergency, non-black start stationary RICE 100≤HP≤500 which combusts landfill or digester gas equivalent to 10 percent or more of the gross heat input on an annual basis	Limit concentration of CO in the stationary RICE exhaust to 177 ppmvd or less at 15 percent O_2.	

[1] If an emergency engine is operating during an emergency and it is not possible to shut down the engine in order to perform the work practice requirements on the schedule required in Table 2c of this subpart, or if performing the work practice on the required schedule would otherwise pose an unacceptable risk under federal, state, or local law, the work practice can be delayed until the emergency is over or the unacceptable risk under federal, state, or local law has abated. The work practice should be performed as soon as practicable after the emergency has ended or the unacceptable risk under federal, state, or local law has abated. Sources must report any failure to perform the work practice on the schedule required and the federal, state or local law under which the risk was deemed unacceptable.

[2] Sources have the option to utilize an oil analysis program as described in § 63.6625(i) or (j) in order to extend the specified oil change requirement in Table 2c of this subpart.

[3] Sources can petition the Administrator pursuant to the requirements of 40 CFR 63.6(g) for alternative work practices.

[78 FR 6708, Jan. 30, 2013, as amended at 78 FR 14457, Mar. 6, 2013]

Table 2 d to Subpart ZZZZ of Part 63—Requirements for Existing Stationary RICE Located at Area Sources of HAP Emissions

As stated in §§ 63.6603 and 63.6640, you must comply with the following requirements for existing stationary RICE located at area sources of HAP emissions:

For each . . .	You must meet the following requirement, except during periods of startup . . .	During periods of startup you must . . .
1. Non-Emergency, non-black start CI stationary RICE ≤300 HP	a. Change oil and filter every 1,000 hours of operation or annually, whichever comes first;[1] b. Inspect air cleaner every 1,000 hours of operation or annually, whichever comes first, and replace as necessary; c. Inspect all hoses and belts every 500 hours of operation or annually, whichever comes first, and replace as necessary.	Minimize the engine's time spent at idle and minimize the engine's startup time at startup to a period needed for appropriate and safe loading of the engine, not to exceed 30 minutes, after which time the non-startup emission limitations apply.
2. Non-Emergency, non-black start CI stationary RICE 300<HP≤500	a. Limit concentration of CO in the stationary RICE exhaust to 49 ppmvd at 15 percent O_2; or	
	b. Reduce CO emissions by 70 percent or more.	
3. Non-Emergency, non-black start CI stationary RICE >500 HP	a. Limit concentration of CO in the stationary RICE exhaust to 23 ppmvd at 15 percent O_2; or	
	b. Reduce CO emissions by 70 percent or more.	
4. Emergency stationary CI RICE and black start stationary CI RICE.[2]	a. Change oil and filter every 500 hours of operation or annually, whichever comes first;[1]	
	b. Inspect air cleaner every 1,000 hours of operation or annually, whichever comes first, and replace as necessary; and	
	c. Inspect all hoses and belts every 500 hours of operation or annually, whichever comes first, and replace as necessary.	

For each . . .	You must meet the following requirement, except during periods of startup . . .	During periods of startup you must . . .
5. Emergency stationary SI RICE; black start stationary SI RICE; non-emergency, non-black start 4SLB stationary RICE >500 HP that operate 24 hours or less per calendar year; non-emergency, non-black start 4SRB stationary RICE >500 HP that operate 24 hours or less per calendar year.[2]	a. Change oil and filter every 500 hours of operation or annually, whichever comes first;[1]; b. Inspect spark plugs every 1,000 hours of operation or annually, whichever comes first, and replace as necessary; and c. Inspect all hoses and belts every 500 hours of operation or annually, whichever comes first, and replace as necessary.	
6. Non-emergency, non-black start 2SLB stationary RICE	a. Change oil and filter every 4,320 hours of operation or annually, whichever comes first;[1]	
	b. Inspect spark plugs every 4,320 hours of operation or annually, whichever comes first, and replace as necessary; and	
	c. Inspect all hoses and belts every 4,320 hours of operation or annually, whichever comes first, and replace as necessary.	
7. Non-emergency, non-black start 4SLB stationary RICE ≤500 HP	a. Change oil and filter every 1,440 hours of operation or annually, whichever comes first;[1]	
	b. Inspect spark plugs every 1,440 hours of operation or annually, whichever comes first, and replace as necessary; and	
	c. Inspect all hoses and belts every 1,440 hours of operation or annually, whichever comes first, and replace as necessary.	
8. Non-emergency, non-black start 4SLB remote stationary RICE >500 HP	a. Change oil and filter every 2,160 hours of operation or annually, whichever comes first;[1]	
	b. Inspect spark plugs every 2,160 hours of operation or annually, whichever comes first, and replace as necessary; and	

For each . . .	You must meet the following requirement, except during periods of startup . . .	During periods of startup you must . . .
	c. Inspect all hoses and belts every 2,160 hours of operation or annually, whichever comes first, and replace as necessary.	
9. Non-emergency, non-black start 4SLB stationary RICE >500 HP that are not remote stationary RICE and that operate more than 24 hours per calendar year	Install an oxidation catalyst to reduce HAP emissions from the stationary RICE.	
10. Non-emergency, non-black start 4SRB stationary RICE ≤500 HP	a. Change oil and filter every 1,440 hours of operation or annually, whichever comes first;[1]	
	b. Inspect spark plugs every 1,440 hours of operation or annually, whichever comes first, and replace as necessary; and	
	c. Inspect all hoses and belts every 1,440 hours of operation or annually, whichever comes first, and replace as necessary.	
11. Non-emergency, non-black start 4SRB remote stationary RICE >500 HP	a. Change oil and filter every 2,160 hours of operation or annually, whichever comes first;[1]	
	b. Inspect spark plugs every 2,160 hours of operation or annually, whichever comes first, and replace as necessary; and	
	c. Inspect all hoses and belts every 2,160 hours of operation or annually, whichever comes first, and replace as necessary.	
12. Non-emergency, non-black start 4SRB stationary RICE >500 HP that are not remote stationary RICE and that operate more than 24 hours per calendar year	Install NSCR to reduce HAP emissions from the stationary RICE.	
13. Non-emergency, non-black start stationary RICE which combusts landfill or digester gas equivalent to 10 percent or more of the gross heat input on an annual basis	a. Change oil and filter every 1,440 hours of operation or annually, whichever comes first;[1] b. Inspect spark plugs every 1,440 hours of operation or annually, whichever comes first, and replace as necessary; and	

For each . . .	You must meet the following requirement, except during periods of startup . . .	During periods of startup you must . . .
	c. Inspect all hoses and belts every 1,440 hours of operation or annually, whichever comes first, and replace as necessary.	

[1] Sources have the option to utilize an oil analysis program as described in § 63.6625(i) or (j) in order to extend the specified oil change requirement in Table 2d of this subpart.

[2] If an emergency engine is operating during an emergency and it is not possible to shut down the engine in order to perform the management practice requirements on the schedule required in Table 2d of this subpart, or if performing the management practice on the required schedule would otherwise pose an unacceptable risk under federal, state, or local law, the management practice can be delayed until the emergency is over or the unacceptable risk under federal, state, or local law has abated. The management practice should be performed as soon as practicable after the emergency has ended or the unacceptable risk under federal, state, or local law has abated. Sources must report any failure to perform the management practice on the schedule required and the federal, state or local law under which the risk was deemed unacceptable.

[78 FR 6709, Jan. 30, 2013]

Table 3 to Subpart ZZZZ of Part 63—Subsequent Performance Tests

As stated in §§ 63.6615 and 63.6620, you must comply with the following subsequent performance test requirements:

For each . . .	Complying with the requirement to . . .	You must . . .
1. New or reconstructed 2SLB stationary RICE >500 HP located at major sources; new or reconstructed 4SLB stationary RICE ≥250 HP located at major sources; and new or reconstructed CI stationary RICE >500 HP located at major sources	Reduce CO emissions and not using a CEMS	Conduct subsequent performance tests semiannually.[1]
2. 4SRB stationary RICE ≥5,000 HP located at major sources	Reduce formaldehyde emissions	Conduct subsequent performance tests semiannually.[1]
3. Stationary RICE >500 HP located at major sources and new or reconstructed 4SLB stationary RICE 250≤HP≤500 located at major sources	Limit the concentration of formaldehyde in the stationary RICE exhaust	Conduct subsequent performance tests semiannually.[1]
4. Existing non-emergency, non-black start CI stationary RICE >500 HP that are not limited use stationary RICE	Limit or reduce CO emissions and not using a CEMS	Conduct subsequent performance tests every 8,760 hours or 3 years, whichever comes first.
5. Existing non-emergency, non-black start CI stationary RICE >500 HP that are limited use stationary RICE	Limit or reduce CO emissions and not using a CEMS	Conduct subsequent performance tests every 8,760 hours or 5 years, whichever comes first.

[1] After you have demonstrated compliance for two consecutive tests, you may reduce the frequency of subsequent performance tests to annually. If the results of any subsequent annual performance test indicate the stationary RICE is not in compliance with the CO or formaldehyde emission limitation, or you deviate from any of your operating limitations, you must resume semiannual performance tests.

[78 FR 6711, Jan. 30, 2013]

Table 4 to Subpart ZZZZ of Part 63—Requirements for Performance Tests

As stated in §§ 63.6610, 63.6611, 63.6612, 63.6620, and 63.6640, you must comply with the following requirements for performance tests for stationary RICE:

For each . . .	Complying with the requirement to . . .	You must . . .	Using . . .	According to the following requirements . . .
1. 2SLB, 4SLB, and CI stationary RICE	a. reduce CO emissions	i. Measure the O_2at the inlet and outlet of the control device; and	(1) Method 3 or 3A or 3B of 40 CFR part 60, appendix A, or ASTM Method D6522-00 (Reapproved 2005).[a c]	(a) Measurements to determine O_2must be made at the same time as the measurements for CO concentration.
		ii. Measure the CO at the inlet and the outlet of the control device	(1) ASTM D6522-00 (Reapproved 2005) [a b c]or Method 10 of 40 CFR part 60, appendix A	(a) The CO concentration must be at 15 percent O_2, dry basis.
2. 4SRB stationary RICE	a. reduce formaldehyde emissions	i. Select the sampling port location and the number of traverse points; and	(1) Method 1 or 1A of 40 CFR part 60, appendix A § 63.7(d)(1)(i)	(a) sampling sites must be located at the inlet and outlet of the control device.
		ii. Measure O_2at the inlet and outlet of the control device; and	(1) Method 3 or 3A or 3B of 40 CFR part 60, appendix A, or ASTM Method D6522-00 (Reapproved 2005).[a]	(a) measurements to determine O_2concentration must be made at the same time as the measurements for formaldehyde or THC concentration.
		iii. Measure moisture content at the inlet and outlet of the control device; and	(1) Method 4 of 40 CFR part 60, appendix A, or Test Method 320 of 40 CFR part 63, appendix A, or ASTM D 6348-03.[a]	(a) measurements to determine moisture content must be made at the same time and location as the measurements for formaldehyde or THC concentration.
		iv. If demonstrating compliance with the formaldehyde percent reduction requirement, measure formaldehyde at the inlet and the outlet of the control device	(1) Method 320 or 323 of 40 CFR part 63, appendix A; or ASTM D6348-03,[a]provided in ASTM D6348-03 Annex A5 (Analyte Spiking Technique), the percent R must be greater than or equal to 70 and less than or equal to 130	(a) formaldehyde concentration must be at 15 percent O_2, dry basis. Results of this test consist of the average of the three 1-hour or longer runs.
		v. If demonstrating compliance with the THC percent reduction requirement, measure THC at the inlet and the outlet of the control device	(1) Method 25A, reported as propane, of 40 CFR part 60, appendix A	(a) THC concentration must be at 15 percent O_2, dry basis. Results of this test consist of the average of the three 1-hour or longer runs.
3. Stationary RICE	a. limit the concentration of formaldehyde or CO in the stationary RICE exhaust	i. Select the sampling port location and the number of traverse points; and	(1) Method 1 or 1A of 40 CFR part 60, appendix A § 63.7(d)(1)(i)	(a) if using a control device, the sampling site must be located at the outlet of the control device.

For each . . .	Complying with the requirement to . . .	You must . . .	Using . . .	According to the following requirements . . .
		ii. Determine the O_2concentration of the stationary RICE exhaust at the sampling port location; and	(1) Method 3 or 3A or 3B of 40 CFR part 60, appendix A, or ASTM Method D6522-00 (Reapproved 2005).[a]	(a) measurements to determine O_2concentration must be made at the same time and location as the measurements for formaldehyde or CO concentration.
		iii. Measure moisture content of the stationary RICE exhaust at the sampling port location; and	(1) Method 4 of 40 CFR part 60, appendix A, or Test Method 320 of 40 CFR part 63, appendix A, or ASTM D 6348-03.[a]	(a) measurements to determine moisture content must be made at the same time and location as the measurements for formaldehyde or CO concentration.
		iv. Measure formaldehyde at the exhaust of the stationary RICE; or	(1) Method 320 or 323 of 40 CFR part 63, appendix A; or ASTM D6348-03,[a]provided in ASTM D6348-03 Annex A5 (Analyte Spiking Technique), the percent R must be greater than or equal to 70 and less than or equal to 130	(a) Formaldehyde concentration must be at 15 percent O_2, dry basis. Results of this test consist of the average of the three 1-hour or longer runs.
		v. measure CO at the exhaust of the stationary RICE.	(1) Method 10 of 40 CFR part 60, appendix A, ASTM Method D6522-00 (2005),[a] [c]Method 320 of 40 CFR part 63, appendix A, or ASTM D6348-03.[a]	(a) CO concentration must be at 15 percent O_2, dry basis. Results of this test consist of the average of the three 1-hour or longer runs.

[a] Incorporated by reference, see 40 CFR 63.14. You may also obtain copies from University Microfilms International, 300 North Zeeb Road, Ann Arbor, MI 48106.

[b] You may also use Method 320 of 40 CFR part 63, appendix A, or ASTM D6348-03.

[c] ASTM-D6522-00 (2005) may be used to test both CI and SI stationary RICE.

[78 FR 6711, Jan. 30, 2013]

Table 5 to Subpart ZZZZ of Part 63—Initial Compliance With Emission Limitations, Operating Limitations, and Other Requirements

As stated in §§ 63.6612, 63.6625 and 63.6630, you must initially comply with the emission and operating limitations as required by the following:

For each . . .	Complying with the requirement to . . .	You have demonstrated initial compliance if . . .
1. New or reconstructed non-emergency 2SLB stationary RICE >500 HP located at a major source of HAP, new or reconstructed non-emergency 4SLB stationary RICE ≥250 HP located at a major source of HAP, non-emergency stationary CI RICE >500 HP located at a major source of HAP, and existing non-emergency stationary CI RICE >500 HP located at an area source of HAP	a. Reduce CO emissions and using oxidation catalyst, and using a CPMS	i. The average reduction of emissions of CO determined from the initial performance test achieves the required CO percent reduction; and ii. You have installed a CPMS to continuously monitor catalyst inlet temperature according to the requirements in § 63.6625(b); and iii. You have recorded the catalyst pressure drop and catalyst inlet temperature during the initial performance test.
2. Non-emergency stationary CI RICE >500 HP located at a major source of HAP, and existing non-emergency stationary CI RICE >500 HP located at an area source of HAP	a. Limit the concentration of CO, using oxidation catalyst, and using a CPMS	i. The average CO concentration determined from the initial performance test is less than or equal to the CO emission limitation; and
		ii. You have installed a CPMS to continuously monitor catalyst inlet temperature according to the requirements in § 63.6625(b); and
		iii. You have recorded the catalyst pressure drop and catalyst inlet temperature during the initial performance test.
3. New or reconstructed non-emergency 2SLB stationary RICE >500 HP located at a major source of HAP, new or reconstructed non-emergency 4SLB stationary RICE ≥250 HP located at a major source of HAP, non-emergency stationary CI RICE >500 HP located at a major source of HAP, and existing non-emergency stationary CI RICE >500 HP located at an area source of HAP	a. Reduce CO emissions and not using oxidation catalyst	i. The average reduction of emissions of CO determined from the initial performance test achieves the required CO percent reduction; and ii. You have installed a CPMS to continuously monitor operating parameters approved by the Administrator (if any) according to the requirements in § 63.6625(b); and iii. You have recorded the approved operating parameters (if any) during the initial performance test.
4. Non-emergency stationary CI RICE >500 HP located at a major source of HAP, and existing non-emergency stationary CI RICE >500 HP located at an area source of HAP	a. Limit the concentration of CO, and not using oxidation catalyst	i. The average CO concentration determined from the initial performance test is less than or equal to the CO emission limitation; and ii. You have installed a CPMS to continuously monitor operating parameters approved by the Administrator (if any) according to the requirements in § 63.6625(b); and
		iii. You have recorded the approved operating parameters (if any) during the initial performance test.

For each . . .	Complying with the requirement to . . .	You have demonstrated initial compliance if . . .
5. New or reconstructed non-emergency 2SLB stationary RICE >500 HP located at a major source of HAP, new or reconstructed non-emergency 4SLB stationary RICE ≥250 HP located at a major source of HAP, non-emergency stationary CI RICE >500 HP located at a major source of HAP, and existing non-emergency stationary CI RICE >500 HP located at an area source of HAP	a. Reduce CO emissions, and using a CEMS	i. You have installed a CEMS to continuously monitor CO and either O_2or CO_2at both the inlet and outlet of the oxidation catalyst according to the requirements in § 63.6625(a); and ii. You have conducted a performance evaluation of your CEMS using PS 3 and 4A of 40 CFR part 60, appendix B; and
		iii. The average reduction of CO calculated using § 63.6620 equals or exceeds the required percent reduction. The initial test comprises the first 4-hour period after successful validation of the CEMS. Compliance is based on the average percent reduction achieved during the 4-hour period.
6. Non-emergency stationary CI RICE >500 HP located at a major source of HAP, and existing non-emergency stationary CI RICE >500 HP located at an area source of HAP	a. Limit the concentration of CO, and using a CEMS	i. You have installed a CEMS to continuously monitor CO and either O_2or CO_2at the outlet of the oxidation catalyst according to the requirements in § 63.6625(a); and
		ii. You have conducted a performance evaluation of your CEMS using PS 3 and 4A of 40 CFR part 60, appendix B; and
		iii. The average concentration of CO calculated using § 63.6620 is less than or equal to the CO emission limitation. The initial test comprises the first 4-hour period after successful validation of the CEMS. Compliance is based on the average concentration measured during the 4-hour period.
7. Non-emergency 4SRB stationary RICE >500 HP located at a major source of HAP	a. Reduce formaldehyde emissions and using NSCR	i. The average reduction of emissions of formaldehyde determined from the initial performance test is equal to or greater than the required formaldehyde percent reduction, or the average reduction of emissions of THC determined from the initial performance test is equal to or greater than 30 percent; and
		ii. You have installed a CPMS to continuously monitor catalyst inlet temperature according to the requirements in § 63.6625(b); and
		iii. You have recorded the catalyst pressure drop and catalyst inlet temperature during the initial performance test.
8. Non-emergency 4SRB stationary RICE >500 HP located at a major source of HAP	a. Reduce formaldehyde emissions and not using NSCR	i. The average reduction of emissions of formaldehyde determined from the initial performance test is equal to or greater than the required formaldehyde percent reduction or the average reduction of emissions of THC determined from the initial performance test is equal to or greater than 30 percent; and

For each . . .	Complying with the requirement to . . .	You have demonstrated initial compliance if . . .
		ii. You have installed a CPMS to continuously monitor operating parameters approved by the Administrator (if any) according to the requirements in § 63.6625(b); and
		iii. You have recorded the approved operating parameters (if any) during the initial performance test.
9. New or reconstructed non-emergency stationary RICE >500 HP located at a major source of HAP, new or reconstructed non-emergency 4SLB stationary RICE 250≤HP≤500 located at a major source of HAP, and existing non-emergency 4SRB stationary RICE >500 HP located at a major source of HAP	a. Limit the concentration of formaldehyde in the stationary RICE exhaust and using oxidation catalyst or NSCR	i. The average formaldehyde concentration, corrected to 15 percent O_2, dry basis, from the three test runs is less than or equal to the formaldehyde emission limitation; and ii. You have installed a CPMS to continuously monitor catalyst inlet temperature according to the requirements in § 63.6625(b); and
		iii. You have recorded the catalyst pressure drop and catalyst inlet temperature during the initial performance test.
10. New or reconstructed non-emergency stationary RICE >500 HP located at a major source of HAP, new or reconstructed non-emergency 4SLB stationary RICE 250≤HP≤500 located at a major source of HAP, and existing non-emergency 4SRB stationary RICE >500 HP located at a major source of HAP	a. Limit the concentration of formaldehyde in the stationary RICE exhaust and not using oxidation catalyst or NSCR	i. The average formaldehyde concentration, corrected to 15 percent O_2, dry basis, from the three test runs is less than or equal to the formaldehyde emission limitation; and ii. You have installed a CPMS to continuously monitor operating parameters approved by the Administrator (if any) according to the requirements in § 63.6625(b); and
		iii. You have recorded the approved operating parameters (if any) during the initial performance test.
11. Existing non-emergency stationary RICE 100≤HP≤500 located at a major source of HAP, and existing non-emergency stationary CI RICE 300<HP≤500 located at an area source of HAP	a. Reduce CO emissions	i. The average reduction of emissions of CO or formaldehyde, as applicable determined from the initial performance test is equal to or greater than the required CO or formaldehyde, as applicable, percent reduction.
12. Existing non-emergency stationary RICE 100≤HP≤500 located at a major source of HAP, and existing non-emergency stationary CI RICE 300<HP≤500 located at an area source of HAP	a. Limit the concentration of formaldehyde or CO in the stationary RICE exhaust	i. The average formaldehyde or CO concentration, as applicable, corrected to 15 percent O_2, dry basis, from the three test runs is less than or equal to the formaldehyde or CO emission limitation, as applicable.
13. Existing non-emergency 4SLB stationary RICE >500 HP located at an area source of HAP that are not remote stationary RICE and that are operated more than 24 hours per calendar year	a. Install an oxidation catalyst	i. You have conducted an initial compliance demonstration as specified in § 63.6630(e) to show that the average reduction of emissions of CO is 93 percent or more, or the average CO concentration is less than or equal to 47 ppmvd at 15 percent O_2;

For each . . .	Complying with the requirement to . . .	You have demonstrated initial compliance if . . .
		ii. You have installed a CPMS to continuously monitor catalyst inlet temperature according to the requirements in § 63.6625(b), or you have installed equipment to automatically shut down the engine if the catalyst inlet temperature exceeds 1350 °F.
14. Existing non-emergency 4SRB stationary RICE >500 HP located at an area source of HAP that are not remote stationary RICE and that are operated more than 24 hours per calendar year	a. Install NSCR	i. You have conducted an initial compliance demonstration as specified in § 63.6630(e) to show that the average reduction of emissions of CO is 75 percent or more, the average CO concentration is less than or equal to 270 ppmvd at 15 percent O_2, or the average reduction of emissions of THC is 30 percent or more;
		ii. You have installed a CPMS to continuously monitor catalyst inlet temperature according to the requirements in § 63.6625(b), or you have installed equipment to automatically shut down the engine if the catalyst inlet temperature exceeds 1250 °F.

[78 FR 6712, Jan. 30, 2013]

Table 6 to Subpart ZZZZ of Part 63—Continuous Compliance With Emission Limitations, and Other Requirements

As stated in § 63.6640, you must continuously comply with the emissions and operating limitations and work or management practices as required by the following:

For each . . .	Complying with the requirement to . . .	You must demonstrate continuous compliance by . . .
1. New or reconstructed non-emergency 2SLB stationary RICE >500 HP located at a major source of HAP, new or reconstructed non-emergency 4SLB stationary RICE ≥250 HP located at a major source of HAP, and new or reconstructed non-emergency CI stationary RICE >500 HP located at a major source of HAP	a. Reduce CO emissions and using an oxidation catalyst, and using a CPMS	i. Conducting semiannual performance tests for CO to demonstrate that the required CO percent reduction is achieved [a]; and ii. Collecting the catalyst inlet temperature data according to § 63.6625(b); and iii. Reducing these data to 4-hour rolling averages; and
		iv. Maintaining the 4-hour rolling averages within the operating limitations for the catalyst inlet temperature; and
		v. Measuring the pressure drop across the catalyst once per month and demonstrating that the pressure drop across the catalyst is within the operating limitation established during the performance test.

For each . . .	Complying with the requirement to . . .	You must demonstrate continuous compliance by . . .
2. New or reconstructed non-emergency 2SLB stationary RICE >500 HP located at a major source of HAP, new or reconstructed non-emergency 4SLB stationary RICE ≥250 HP located at a major source of HAP, and new or reconstructed non-emergency CI stationary RICE >500 HP located at a major source of HAP	a. Reduce CO emissions and not using an oxidation catalyst, and using a CPMS	i. Conducting semiannual performance tests for CO to demonstrate that the required CO percent reduction is achieved [a]; and ii. Collecting the approved operating parameter (if any) data according to § 63.6625(b); and iii. Reducing these data to 4-hour rolling averages; and
		iv. Maintaining the 4-hour rolling averages within the operating limitations for the operating parameters established during the performance test.
3. New or reconstructed non-emergency 2SLB stationary RICE >500 HP located at a major source of HAP, new or reconstructed non-emergency 4SLB stationary RICE ≥250 HP located at a major source of HAP, new or reconstructed non-emergency stationary CI RICE >500 HP located at a major source of HAP, and existing non-emergency stationary CI RICE >500 HP	a. Reduce CO emissions or limit the concentration of CO in the stationary RICE exhaust, and using a CEMS	i. Collecting the monitoring data according to § 63.6625(a), reducing the measurements to 1-hour averages, calculating the percent reduction or concentration of CO emissions according to § 63.6620; and ii. Demonstrating that the catalyst achieves the required percent reduction of CO emissions over the 4-hour averaging period, or that the emission remain at or below the CO concentration limit; and
		iii. Conducting an annual RATA of your CEMS using PS 3 and 4A of 40 CFR part 60, appendix B, as well as daily and periodic data quality checks in accordance with 40 CFR part 60, appendix F, procedure 1.
4. Non-emergency 4SRB stationary RICE >500 HP located at a major source of HAP	a. Reduce formaldehyde emissions and using NSCR	i. Collecting the catalyst inlet temperature data according to § 63.6625(b); and
		ii. Reducing these data to 4-hour rolling averages; and
		iii. Maintaining the 4-hour rolling averages within the operating limitations for the catalyst inlet temperature; and
		iv. Measuring the pressure drop across the catalyst once per month and demonstrating that the pressure drop across the catalyst is within the operating limitation established during the performance test.
5. Non-emergency 4SRB stationary RICE >500 HP located at a major source of HAP	a. Reduce formaldehyde emissions and not using NSCR	i. Collecting the approved operating parameter (if any) data according to § 63.6625(b); and
		ii. Reducing these data to 4-hour rolling averages; and
		iii. Maintaining the 4-hour rolling averages within the operating limitations for the operating parameters established during the performance test.

For each . . .	Complying with the requirement to . . .	You must demonstrate continuous compliance by . . .
6. Non-emergency 4SRB stationary RICE with a brake HP ≥5,000 located at a major source of HAP	a. Reduce formaldehyde emissions	Conducting semiannual performance tests for formaldehyde to demonstrate that the required formaldehyde percent reduction is achieved, or to demonstrate that the average reduction of emissions of THC determined from the performance test is equal to or greater than 30 percent.[a]
7. New or reconstructed non-emergency stationary RICE >500 HP located at a major source of HAP and new or reconstructed non-emergency 4SLB stationary RICE 250≤HP≤500 located at a major source of HAP	a. Limit the concentration of formaldehyde in the stationary RICE exhaust and using oxidation catalyst or NSCR	i. Conducting semiannual performance tests for formaldehyde to demonstrate that your emissions remain at or below the formaldehyde concentration limit [a]; and ii. Collecting the catalyst inlet temperature data according to § 63.6625(b); and
		iii. Reducing these data to 4-hour rolling averages; and
		iv. Maintaining the 4-hour rolling averages within the operating limitations for the catalyst inlet temperature; and
		v. Measuring the pressure drop across the catalyst once per month and demonstrating that the pressure drop across the catalyst is within the operating limitation established during the performance test.
8. New or reconstructed non-emergency stationary RICE >500 HP located at a major source of HAP and new or reconstructed non-emergency 4SLB stationary RICE 250≤HP≤500 located at a major source of HAP	a. Limit the concentration of formaldehyde in the stationary RICE exhaust and not using oxidation catalyst or NSCR	i. Conducting semiannual performance tests for formaldehyde to demonstrate that your emissions remain at or below the formaldehyde concentration limit [a]; and ii. Collecting the approved operating parameter (if any) data according to § 63.6625(b); and
		iii. Reducing these data to 4-hour rolling averages; and
		iv. Maintaining the 4-hour rolling averages within the operating limitations for the operating parameters established during the performance test.

For each . . .	Complying with the requirement to . . .	You must demonstrate continuous compliance by . . .
9. Existing emergency and black start stationary RICE ≤500 HP located at a major source of HAP, existing non-emergency stationary RICE <100 HP located at a major source of HAP, existing emergency and black start stationary RICE located at an area source of HAP, existing non-emergency stationary CI RICE ≤300 HP located at an area source of HAP, existing non-emergency 2SLB stationary RICE located at an area source of HAP, existing non-emergency stationary SI RICE located at an area source of HAP which combusts landfill or digester gas equivalent to 10 percent or more of the gross heat input on an annual basis, existing non-emergency 4SLB and 4SRB stationary RICE ≤500 HP located at an area source of HAP, existing non-emergency 4SLB and 4SRB stationary RICE >500 HP located at an area source of HAP that operate 24 hours or less per calendar year, and existing non-emergency 4SLB and 4SRB stationary RICE >500 HP located at an area source of HAP that are remote stationary RICE	a. Work or Management practices	i. Operating and maintaining the stationary RICE according to the manufacturer's emission-related operation and maintenance instructions; or ii. Develop and follow your own maintenance plan which must provide to the extent practicable for the maintenance and operation of the engine in a manner consistent with good air pollution control practice for minimizing emissions.
10. Existing stationary CI RICE >500 HP that are not limited use stationary RICE	a. Reduce CO emissions, or limit the concentration of CO in the stationary RICE exhaust, and using oxidation catalyst	i. Conducting performance tests every 8,760 hours or 3 years, whichever comes first, for CO or formaldehyde, as appropriate, to demonstrate that the required CO or formaldehyde, as appropriate, percent reduction is achieved or that your emissions remain at or below the CO or formaldehyde concentration limit; and
		ii. Collecting the catalyst inlet temperature data according to § 63.6625(b); and
		iii. Reducing these data to 4-hour rolling averages; and
		iv. Maintaining the 4-hour rolling averages within the operating limitations for the catalyst inlet temperature; and
		v. Measuring the pressure drop across the catalyst once per month and demonstrating that the pressure drop across the catalyst is within the operating limitation established during the performance test.
11. Existing stationary CI RICE >500 HP that are not limited use stationary RICE	a. Reduce CO emissions, or limit the concentration of CO in the stationary RICE exhaust, and not using oxidation catalyst	i. Conducting performance tests every 8,760 hours or 3 years, whichever comes first, for CO or formaldehyde, as appropriate, to demonstrate that the required CO or formaldehyde, as appropriate, percent reduction is achieved or that your emissions remain at or below the CO or formaldehyde concentration limit; and
		ii. Collecting the approved operating parameter (if any) data according to § 63.6625(b); and

For each . . .	Complying with the requirement to . . .	You must demonstrate continuous compliance by . . .
		iii. Reducing these data to 4-hour rolling averages; and
		iv. Maintaining the 4-hour rolling averages within the operating limitations for the operating parameters established during the performance test.
12. Existing limited use CI stationary RICE >500 HP	a. Reduce CO emissions or limit the concentration of CO in the stationary RICE exhaust, and using an oxidation catalyst	i. Conducting performance tests every 8,760 hours or 5 years, whichever comes first, for CO or formaldehyde, as appropriate, to demonstrate that the required CO or formaldehyde, as appropriate, percent reduction is achieved or that your emissions remain at or below the CO or formaldehyde concentration limit; and
		ii. Collecting the catalyst inlet temperature data according to § 63.6625(b); and
		iii. Reducing these data to 4-hour rolling averages; and
		iv. Maintaining the 4-hour rolling averages within the operating limitations for the catalyst inlet temperature; and
		v. Measuring the pressure drop across the catalyst once per month and demonstrating that the pressure drop across the catalyst is within the operating limitation established during the performance test.
13. Existing limited use CI stationary RICE >500 HP	a. Reduce CO emissions or limit the concentration of CO in the stationary RICE exhaust, and not using an oxidation catalyst	i. Conducting performance tests every 8,760 hours or 5 years, whichever comes first, for CO or formaldehyde, as appropriate, to demonstrate that the required CO or formaldehyde, as appropriate, percent reduction is achieved or that your emissions remain at or below the CO or formaldehyde concentration limit; and
		ii. Collecting the approved operating parameter (if any) data according to § 63.6625(b); and
		iii. Reducing these data to 4-hour rolling averages; and
		iv. Maintaining the 4-hour rolling averages within the operating limitations for the operating parameters established during the performance test.

For each . . .	Complying with the requirement to . . .	You must demonstrate continuous compliance by . . .
14. Existing non-emergency 4SLB stationary RICE >500 HP located at an area source of HAP that are not remote stationary RICE and that are operated more than 24 hours per calendar year	a. Install an oxidation catalyst	i. Conducting annual compliance demonstrations as specified in § 63.6640(c) to show that the average reduction of emissions of CO is 93 percent or more, or the average CO concentration is less than or equal to 47 ppmvd at 15 percent O_2; and either ii. Collecting the catalyst inlet temperature data according to § 63.6625(b), reducing these data to 4-hour rolling averages; and maintaining the 4-hour rolling averages within the limitation of greater than 450 °F and less than or equal to 1350 °F for the catalyst inlet temperature; or iii. Immediately shutting down the engine if the catalyst inlet temperature exceeds 1350 °F.
15. Existing non-emergency 4SRB stationary RICE >500 HP located at an area source of HAP that are not remote stationary RICE and that are operated more than 24 hours per calendar year	a. Install NSCR	i. Conducting annual compliance demonstrations as specified in § 63.6640(c) to show that the average reduction of emissions of CO is 75 percent or more, the average CO concentration is less than or equal to 270 ppmvd at 15 percent O_2,or the average reduction of emissions of THC is 30 percent or more; and either ii. Collecting the catalyst inlet temperature data according to § 63.6625(b), reducing these data to 4-hour rolling averages; and maintaining the 4-hour rolling averages within the limitation of greater than or equal to 750 °F and less than or equal to 1250 °F for the catalyst inlet temperature; or iii. Immediately shutting down the engine if the catalyst inlet temperature exceeds 1250 °F.

[a] After you have demonstrated compliance for two consecutive tests, you may reduce the frequency of subsequent performance tests to annually. If the results of any subsequent annual performance test indicate the stationary RICE is not in compliance with the CO or formaldehyde emission limitation, or you deviate from any of your operating limitations, you must resume semiannual performance tests.

[78 FR 6715, Jan. 30, 2013]

Table 7 to Subpart ZZZZ of Part 63—Requirements for Reports

As stated in § 63.6650, you must comply with the following requirements for reports:

For each . . .	You must submit a . . .	The report must contain . . .	You must submit the report . . .
1. Existing non-emergency, non-black start stationary RICE 100≤HP≤500 located at a major source of HAP; existing non-emergency, non-black start stationary CI RICE >500 HP located at a major source of HAP; existing non-emergency 4SRB stationary RICE >500 HP located at a major source of HAP; existing non-emergency, non-black start stationary CI RICE >300 HP located at an area source of HAP; new or reconstructed non-emergency stationary RICE >500 HP located at a major source of HAP; and new or reconstructed non-emergency 4SLB stationary RICE 250≤HP≤500 located at a major source of HAP	Compliance report	a. If there are no deviations from any emission limitations or operating limitations that apply to you, a statement that there were no deviations from the emission limitations or operating limitations during the reporting period. If there were no periods during which the CMS, including CEMS and CPMS, was out-of-control, as specified in § 63.8(c)(7), a statement that there were not periods during which the CMS was out-of-control during the reporting period; or	i. Semiannually according to the requirements in § 63.6650(b)(1)-(5) for engines that are not limited use stationary RICE subject to numerical emission limitations; and ii. Annually according to the requirements in § 63.6650(b)(6)-(9) for engines that are limited use stationary RICE subject to numerical emission limitations.
		b. If you had a deviation from any emission limitation or operating limitation during the reporting period, the information in § 63.6650(d). If there were periods during which the CMS, including CEMS and CPMS, was out-of-control, as specified in § 63.8(c)(7), the information in § 63.6650(e); or	i. Semiannually according to the requirements in § 63.6650(b).
		c. If you had a malfunction during the reporting period, the information in § 63.6650(c)(4).	i. Semiannually according to the requirements in § 63.6650(b).
2. New or reconstructed non-emergency stationary RICE that combusts landfill gas or digester gas equivalent to 10 percent or more of the gross heat input on an annual basis	Report	a. The fuel flow rate of each fuel and the heating values that were used in your calculations, and you must demonstrate that the percentage of heat input provided by landfill gas or digester gas, is equivalent to 10 percent or more of the gross heat input on an annual basis; and	i. Annually, according to the requirements in § 63.6650.
		b. The operating limits provided in your federally enforceable permit, and any deviations from these limits; and	i. See item 2.a.i.
		c. Any problems or errors suspected with the meters.	i. See item 2.a.i.
3. Existing non-emergency, non-black start 4SLB and 4SRB stationary RICE >500 HP located at an area source of HAP that are not remote stationary RICE and that operate more than 24 hours per calendar year	Compliance report	a. The results of the annual compliance demonstration, if conducted during the reporting period.	i. Semiannually according to the requirements in § 63.6650(b)(1)-(5).

For each . . .	You must submit a . . .	The report must contain . . .	You must submit the report . . .
4. Emergency stationary RICE that operate or are contractually obligated to be available for more than 15 hours per year for the purposes specified in § 63.6640(f)(2)(ii) and (iii) or that operate for the purposes specified in § 63.6640(f)(4)(ii)	Report	a. The information in § 63.6650(h)(1)	i. annually according to the requirements in § 63.6650(h)(2)-(3).

[78 FR 6719, Jan. 30, 2013]

Table 8 to Subpart ZZZZ of Part 63—Applicability of General Provisions to Subpart ZZZZ.

As stated in § 63.6665, you must comply with the following applicable general provisions.

General provisions citation	Subject of citation	Applies to subpart	Explanation
§ 63.1	General applicability of the General Provisions	Yes.	
§ 63.2	Definitions	Yes	Additional terms defined in § 63.6675.
§ 63.3	Units and abbreviations	Yes.	
§ 63.4	Prohibited activities and circumvention	Yes.	
§ 63.5	Construction and reconstruction	Yes.	
§ 63.6(a)	Applicability	Yes.	
§ 63.6(b)(1)-(4)	Compliance dates for new and reconstructed sources	Yes.	
§ 63.6(b)(5)	Notification	Yes.	
§ 63.6(b)(6)	[Reserved]		
§ 63.6(b)(7)	Compliance dates for new and reconstructed area sources that become major sources	Yes.	
§ 63.6(c)(1)-(2)	Compliance dates for existing sources	Yes.	
§ 63.6(c)(3)-(4)	[Reserved]		
§ 63.6(c)(5)	Compliance dates for existing area sources that become major sources	Yes.	
§ 63.6(d)	[Reserved]		
§ 63.6(e)	Operation and maintenance	No.	
§ 63.6(f)(1)	Applicability of standards	No.	
§ 63.6(f)(2)	Methods for determining compliance	Yes.	
§ 63.6(f)(3)	Finding of compliance	Yes.	
§ 63.6(g)(1)-(3)	Use of alternate standard	Yes.	
§ 63.6(h)	Opacity and visible emission standards	No	Subpart ZZZZ does not contain opacity or visible emission standards.
§ 63.6(i)	Compliance extension procedures and criteria	Yes.	

General provisions citation	Subject of citation	Applies to subpart	Explanation
§ 63.6(j)	Presidential compliance exemption	Yes.	
§ 63.7(a)(1)-(2)	Performance test dates	Yes	Subpart ZZZZ contains performance test dates at §§ 63.6610, 63.6611, and 63.6612.
§ 63.7(a)(3)	CAA section 114 authority	Yes.	
§ 63.7(b)(1)	Notification of performance test	Yes	Except that § 63.7(b)(1) only applies as specified in § 63.6645.
§ 63.7(b)(2)	Notification of rescheduling	Yes	Except that § 63.7(b)(2) only applies as specified in § 63.6645.
§ 63.7(c)	Quality assurance/test plan	Yes	Except that § 63.7(c) only applies as specified in § 63.6645.
§ 63.7(d)	Testing facilities	Yes.	
§ 63.7(e)(1)	Conditions for conducting performance tests	No.	Subpart ZZZZ specifies conditions for conducting performance tests at § 63.6620.
§ 63.7(e)(2)	Conduct of performance tests and reduction of data	Yes	Subpart ZZZZ specifies test methods at § 63.6620.
§ 63.7(e)(3)	Test run duration	Yes.	
§ 63.7(e)(4)	Administrator may require other testing under section 114 of the CAA	Yes.	
§ 63.7(f)	Alternative test method provisions	Yes.	
§ 63.7(g)	Performance test data analysis, recordkeeping, and reporting	Yes.	
§ 63.7(h)	Waiver of tests	Yes.	
§ 63.8(a)(1)	Applicability of monitoring requirements	Yes	Subpart ZZZZ contains specific requirements for monitoring at § 63.6625.
§ 63.8(a)(2)	Performance specifications	Yes.	
§ 63.8(a)(3)	[Reserved]		
§ 63.8(a)(4)	Monitoring for control devices	No.	
§ 63.8(b)(1)	Monitoring	Yes.	
§ 63.8(b)(2)-(3)	Multiple effluents and multiple monitoring systems	Yes.	
§ 63.8(c)(1)	Monitoring system operation and maintenance	Yes.	
§ 63.8(c)(1)(i)	Routine and predictable SSM	No	
§ 63.8(c)(1)(ii)	SSM not in Startup Shutdown Malfunction Plan	Yes.	
§ 63.8(c)(1)(iii)	Compliance with operation and maintenance requirements	No	
§ 63.8(c)(2)-(3)	Monitoring system installation	Yes.	
§ 63.8(c)(4)	Continuous monitoring system (CMS) requirements	Yes	Except that subpart ZZZZ does not require Continuous Opacity Monitoring System (COMS).
§ 63.8(c)(5)	COMS minimum procedures	No	Subpart ZZZZ does not require COMS.
§ 63.8(c)(6)-(8)	CMS requirements	Yes	Except that subpart ZZZZ does not require COMS.

General provisions citation	Subject of citation	Applies to subpart	Explanation
§ 63.8(d)	CMS quality control	Yes.	
§ 63.8(e)	CMS performance evaluation	Yes	Except for § 63.8(e)(5)(ii), which applies to COMS.
		Except that § 63.8(e) only applies as specified in § 63.6645.	
§ 63.8(f)(1)-(5)	Alternative monitoring method	Yes	Except that § 63.8(f)(4) only applies as specified in § 63.6645.
§ 63.8(f)(6)	Alternative to relative accuracy test	Yes	Except that § 63.8(f)(6) only applies as specified in § 63.6645.
§ 63.8(g)	Data reduction	Yes	Except that provisions for COMS are not applicable. Averaging periods for demonstrating compliance are specified at §§ 63.6635 and 63.6640.
§ 63.9(a)	Applicability and State delegation of notification requirements	Yes.	
§ 63.9(b)(1)-(5)	Initial notifications	Yes	Except that § 63.9(b)(3) is reserved.
		Except that § 63.9(b) only applies as specified in § 63.6645.	
§ 63.9(c)	Request for compliance extension	Yes	Except that § 63.9(c) only applies as specified in § 63.6645.
§ 63.9(d)	Notification of special compliance requirements for new sources	Yes	Except that § 63.9(d) only applies as specified in § 63.6645.
§ 63.9(e)	Notification of performance test	Yes	Except that § 63.9(e) only applies as specified in § 63.6645.
§ 63.9(f)	Notification of visible emission (VE)/opacity test	No	Subpart ZZZZ does not contain opacity or VE standards.
§ 63.9(g)(1)	Notification of performance evaluation	Yes	Except that § 63.9(g) only applies as specified in § 63.6645.
§ 63.9(g)(2)	Notification of use of COMS data	No	Subpart ZZZZ does not contain opacity or VE standards.
§ 63.9(g)(3)	Notification that criterion for alternative to RATA is exceeded	Yes	If alternative is in use.
		Except that § 63.9(g) only applies as specified in § 63.6645.	
§ 63.9(h)(1)-(6)	Notification of compliance status	Yes	Except that notifications for sources using a CEMS are due 30 days after completion of performance evaluations. § 63.9(h)(4) is reserved.
			Except that § 63.9(h) only applies as specified in § 63.6645.
§ 63.9(i)	Adjustment of submittal deadlines	Yes.	
§ 63.9(j)	Change in previous information	Yes.	
§ 63.10(a)	Administrative provisions for recordkeeping/reporting	Yes.	

General provisions citation	Subject of citation	Applies to subpart	Explanation
§ 63.10(b)(1)	Record retention	Yes	Except that the most recent 2 years of data do not have to be retained on site.
§ 63.10(b)(2)(i)-(v)	Records related to SSM	No.	
§ 63.10(b)(2)(vi)-(xi)	Records	Yes.	
§ 63.10(b)(2)(xii)	Record when under waiver	Yes.	
§ 63.10(b)(2)(xiii)	Records when using alternative to RATA	Yes	For CO standard if using RATA alternative.
§ 63.10(b)(2)(xiv)	Records of supporting documentation	Yes.	
§ 63.10(b)(3)	Records of applicability determination	Yes.	
§ 63.10(c)	Additional records for sources using CEMS	Yes	Except that § 63.10(c)(2)-(4) and (9) are reserved.
§ 63.10(d)(1)	General reporting requirements	Yes.	
§ 63.10(d)(2)	Report of performance test results	Yes.	
§ 63.10(d)(3)	Reporting opacity or VE observations	No	Subpart ZZZZ does not contain opacity or VE standards.
§ 63.10(d)(4)	Progress reports	Yes.	
§ 63.10(d)(5)	Startup, shutdown, and malfunction reports	No.	
§ 63.10(e)(1) and (2)(i)	Additional CMS Reports	Yes.	
§ 63.10(e)(2)(ii)	COMS-related report	No	Subpart ZZZZ does not require COMS.
§ 63.10(e)(3)	Excess emission and parameter exceedances reports	Yes.	Except that § 63.10(e)(3)(i) (C) is reserved.
§ 63.10(e)(4)	Reporting COMS data	No	Subpart ZZZZ does not require COMS.
§ 63.10(f)	Waiver for recordkeeping/reporting	Yes.	
§ 63.11	Flares	No.	
§ 63.12	State authority and delegations	Yes.	
§ 63.13	Addresses	Yes.	
§ 63.14	Incorporation by reference	Yes.	
§ 63.15	Availability of information	Yes.	

[75 FR 9688, Mar. 3, 2010, as amended at 78 FR 6720, Jan. 30, 2013]

Appendix A—Protocol for Using an Electrochemical Analyzer to Determine Oxygen and Carbon Monoxide Concentrations From Certain Engines

1.0 Scope and Application. What is this Protocol?

This protocol is a procedure for using portable electrochemical (EC) cells for measuring carbon monoxide (CO) and oxygen (O_2) concentrations in controlled and uncontrolled emissions from existing stationary 4-stroke lean burn and 4-stroke rich burn reciprocating internal combustion engines as specified in the applicable rule.

1.1 Analytes. What does this protocol determine?

This protocol measures the engine exhaust gas concentrations of carbon monoxide (CO) and oxygen (O_2).

Analyte	CAS No.	Sensitivity
Carbon monoxide (CO)	630-08-0	Minimum detectable limit should be 2 percent of the nominal range or 1 ppm, whichever is less restrictive.
Oxygen (O_2)	*7782-44-7*	

1.2 Applicability. When is this protocol acceptable?

This protocol is applicable to 40 CFR part 63, subpart ZZZZ. Because of inherent cross sensitivities of EC cells, you must not apply this protocol to other emissions sources without specific instruction to that effect.

1.3 Data Quality Objectives. How good must my collected data be?

Refer to Section 13 to verify and document acceptable analyzer performance.

1.4 Range. What is the targeted analytical range for this protocol?

The measurement system and EC cell design(s) conforming to this protocol will determine the analytical range for each gas component. The nominal ranges are defined by choosing up-scale calibration gas concentrations near the maximum anticipated flue gas concentrations for CO and O_2 , or no more than twice the permitted CO level.

1.5 Sensitivity. What minimum detectable limit will this protocol yield for a particular gas component?

The minimum detectable limit depends on the nominal range and resolution of the specific EC cell used, and the signal to noise ratio of the measurement system. The minimum detectable limit should be 2 percent of the nominal range or 1 ppm, whichever is less restrictive.

2.0 Summary of Protocol

In this protocol, a gas sample is extracted from an engine exhaust system and then conveyed to a portable EC analyzer for measurement of CO and O_2 gas concentrations. This method provides measurement system performance specifications and sampling protocols to ensure reliable data. You may use additions to, or modifications of vendor supplied measurement systems (e.g., heated or unheated sample lines, thermocouples, flow meters, selective gas scrubbers, etc.) to meet the design specifications of this protocol. Do not make changes to the measurement system from the as-verified configuration (Section 3.12).

3.0 Definitions

3.1 Measurement System. The total equipment required for the measurement of CO and O_2 concentrations. The measurement system consists of the following major subsystems:

3.1.1 Data Recorder. A strip chart recorder, computer or digital recorder for logging measurement data from the analyzer output. You may record measurement data from the digital data display manually or electronically.

3.1.2 Electrochemical (EC) Cell. A device, similar to a fuel cell, used to sense the presence of a specific analyte and generate an electrical current output proportional to the analyte concentration.

3.1.3 Interference Gas Scrubber. A device used to remove or neutralize chemical compounds that may interfere with the selective operation of an EC cell.

3.1.4 Moisture Removal System. Any device used to reduce the concentration of moisture in the sample stream so as to protect the EC cells from the damaging effects of condensation and to minimize errors in measurements caused by the scrubbing of soluble gases.

3.1.5 Sample Interface. The portion of the system used for one or more of the following: sample acquisition; sample transport; sample conditioning or protection of the EC cell from any degrading effects of the engine exhaust effluent; removal of particulate matter and condensed moisture.

3.2 Nominal Range. The range of analyte concentrations over which each EC cell is operated (normally 25 percent to 150 percent of up-scale calibration gas value). Several nominal ranges can be used for any given cell so long as the calibration and repeatability checks for that range remain within specifications.

3.3 Calibration Gas. A vendor certified concentration of a specific analyte in an appropriate balance gas.

3.4 Zero Calibration Error. The analyte concentration output exhibited by the EC cell in response to zero-level calibration gas.

3.5 Up-Scale Calibration Error. The mean of the difference between the analyte concentration exhibited by the EC cell and the certified concentration of the up-scale calibration gas.

3.6 Interference Check. A procedure for quantifying analytical interference from components in the engine exhaust gas other than the targeted analytes.

3.7 Repeatability Check. A protocol for demonstrating that an EC cell operated over a given nominal analyte concentration range provides a stable and consistent response and is not significantly affected by repeated exposure to that gas.

3.8 Sample Flow Rate. The flow rate of the gas sample as it passes through the EC cell. In some situations, EC cells can experience drift with changes in flow rate. The flow rate must be monitored and documented during all phases of a sampling run.

3.9 Sampling Run. A timed three-phase event whereby an EC cell's response rises and plateaus in a sample conditioning phase, remains relatively constant during a measurement data phase, then declines during a refresh phase. The sample conditioning phase exposes the EC cell to the gas sample for a length of time sufficient to reach a constant response. The measurement data phase is the time interval during which gas sample measurements can be made that meet the acceptance criteria of this protocol. The refresh phase then purges the EC cells with CO-free air. The refresh phase replenishes requisite O_2 and moisture in the electrolyte reserve and provides a mechanism to de-gas or desorb any interference gas scrubbers or filters so as to enable a stable CO EC cell response. There are four primary types of sampling runs: pre- sampling calibrations; stack gas sampling; post-sampling calibration checks; and measurement system repeatability checks. Stack gas sampling runs can be chained together for extended evaluations, providing all other procedural specifications are met.

3.10 Sampling Day. A time not to exceed twelve hours from the time of the pre-sampling calibration to the post-sampling calibration check. During this time, stack gas sampling runs can be repeated without repeated recalibrations, providing all other sampling specifications have been met.

3.11 Pre-Sampling Calibration/Post-Sampling Calibration Check. The protocols executed at the beginning and end of each sampling day to bracket measurement readings with controlled performance checks.

3.12 Performance-Established Configuration. The EC cell and sampling system configuration that existed at the time that it initially met the performance requirements of this protocol.

4.0 Interferences.

When present in sufficient concentrations, NO and NO_2 are two gas species that have been reported to interfere with CO concentration measurements. In the likelihood of this occurrence, it is the protocol user's responsibility to employ

and properly maintain an appropriate CO EC cell filter or scrubber for removal of these gases, as described in Section 6.2.12.

5.0 Safety. [Reserved]

6.0 Equipment and Supplies.

6.1 What equipment do I need for the measurement system?

The system must maintain the gas sample at conditions that will prevent moisture condensation in the sample transport lines, both before and as the sample gas contacts the EC cells. The essential components of the measurement system are described below.

6.2 Measurement System Components.

6.2.1 Sample Probe. A single extraction-point probe constructed of glass, stainless steel or other non-reactive material, and of length sufficient to reach any designated sampling point. The sample probe must be designed to prevent plugging due to condensation or particulate matter.

6.2.2 Sample Line. Non-reactive tubing to transport the effluent from the sample probe to the EC cell.

6.2.3 Calibration Assembly (optional). A three-way valve assembly or equivalent to introduce calibration gases at ambient pressure at the exit end of the sample probe during calibration checks. The assembly must be designed such that only stack gas or calibration gas flows in the sample line and all gases flow through any gas path filters.

6.2.4 Particulate Filter (optional). Filters before the inlet of the EC cell to prevent accumulation of particulate material in the measurement system and extend the useful life of the components. All filters must be fabricated of materials that are non-reactive to the gas mixtures being sampled.

6.2.5 Sample Pump. A leak-free pump to provide undiluted sample gas to the system at a flow rate sufficient to minimize the response time of the measurement system. If located upstream of the EC cells, the pump must be constructed of a material that is non-reactive to the gas mixtures being sampled.

6.2.8 Sample Flow Rate Monitoring. An adjustable rotameter or equivalent device used to adjust and maintain the sample flow rate through the analyzer as prescribed.

6.2.9 Sample Gas Manifold (optional). A manifold to divert a portion of the sample gas stream to the analyzer and the remainder to a by-pass discharge vent. The sample gas manifold may also include provisions for introducing calibration gases directly to the analyzer. The manifold must be constructed of a material that is non-reactive to the gas mixtures being sampled.

6.2.10 EC cell. A device containing one or more EC cells to determine the CO and O_2 concentrations in the sample gas stream. The EC cell(s) must meet the applicable performance specifications of Section 13 of this protocol.

6.2.11 Data Recorder. A strip chart recorder, computer or digital recorder to make a record of analyzer output data. The data recorder resolution (i.e., readability) must be no greater than 1 ppm for CO; 0.1 percent for O_2 ; and one degree (either °C or °F) for temperature. Alternatively, you may use a digital or analog meter having the same resolution to observe and manually record the analyzer responses.

6.2.12 Interference Gas Filter or Scrubber. A device to remove interfering compounds upstream of the CO EC cell. Specific interference gas filters or scrubbers used in the performance-established configuration of the analyzer must continue to be used. Such a filter or scrubber must have a means to determine when the removal agent is exhausted. Periodically replace or replenish it in accordance with the manufacturer's recommendations.

7.0 Reagents and Standards. What calibration gases are needed?

7.1 Calibration Gases. CO calibration gases for the EC cell must be CO in nitrogen or CO in a mixture of nitrogen and O_2. Use CO calibration gases with labeled concentration values certified by the manufacturer to be within ± 5 percent of the label value. Dry ambient air (20.9 percent O_2) is acceptable for calibration of the O_2 cell. If needed, any lower percentage O_2 calibration gas must be a mixture of O_2 in nitrogen.

7.1.1 Up-Scale CO Calibration Gas Concentration. Choose one or more up-scale gas concentrations such that the average of the stack gas measurements for each stack gas sampling run are between 25 and 150 percent of those concentrations. Alternatively, choose an up-scale gas that does not exceed twice the concentration of the applicable outlet standard. If a measured gas value exceeds 150 percent of the up-scale CO calibration gas value at any time during the stack gas sampling run, the run must be discarded and repeated.

7.1.2 Up-Scale O_2 Calibration Gas Concentration.

Select an O_2 gas concentration such that the difference between the gas concentration and the average stack gas measurement or reading for each sample run is less than 15 percent O_2 . When the average exhaust gas O_2 readings are above 6 percent, you may use dry ambient air (20.9 percent O_2) for the up-scale O_2 calibration gas.

7.1.3 Zero Gas. Use an inert gas that contains less than 0.25 percent of the up-scale CO calibration gas concentration. You may use dry air that is free from ambient CO and other combustion gas products (e.g., CO_2).

8.0 Sample Collection and Analysis

8.1 Selection of Sampling Sites.

8.1.1 Control Device Inlet. Select a sampling site sufficiently downstream of the engine so that the combustion gases should be well mixed. Use a single sampling extraction point near the center of the duct (e.g., within the 10 percent centroidal area), unless instructed otherwise.

8.1.2 Exhaust Gas Outlet. Select a sampling site located at least two stack diameters downstream of any disturbance (e.g., turbocharger exhaust, crossover junction or recirculation take-off) and at least one-half stack diameter upstream of the gas discharge to the atmosphere. Use a single sampling extraction point near the center of the duct (e.g., within the 10 percent centroidal area), unless instructed otherwise.

8.2 Stack Gas Collection and Analysis. Prior to the first stack gas sampling run, conduct that the pre-sampling calibration in accordance with Section 10.1. Use Figure 1 to record all data. Zero the analyzer with zero gas. Confirm and record that the scrubber media color is correct and not exhausted. Then position the probe at the sampling point and begin the sampling run at the same flow rate used during the up-scale calibration. Record the start time. Record all EC cell output responses and the flow rate during the “sample conditioning phase” once per minute until constant readings are obtained. Then begin the “measurement data phase” and record readings every 15 seconds for at least two minutes (or eight readings), or as otherwise required to achieve two continuous minutes of data that meet the specification given in Section 13.1. Finally, perform the “refresh phase” by introducing dry air, free from CO and other combustion gases, until several minute-to-minute readings of consistent value have been obtained. For each run use the “measurement data phase” readings to calculate the average stack gas CO and O_2 concentrations.

8.3 EC Cell Rate. Maintain the EC cell sample flow rate so that it does not vary by more than ± 10 percent throughout the pre-sampling calibration, stack gas sampling and post-sampling calibration check. Alternatively, the EC cell sample flow rate can be maintained within a tolerance range that does not affect the gas concentration readings by more than ± 3 percent, as instructed by the EC cell manufacturer.

9.0 Quality Control (Reserved)

10.0 Calibration and Standardization

10.1 Pre-Sampling Calibration. Conduct the following protocol once for each nominal range to be used on each EC cell before performing a stack gas sampling run on each field sampling day. Repeat the calibration if you replace an

EC cell before completing all of the sampling runs. There is no prescribed order for calibration of the EC cells; however, each cell must complete the measurement data phase during calibration. Assemble the measurement system by following the manufacturer's recommended protocols including for preparing and preconditioning the EC cell. Assure the measurement system has no leaks and verify the gas scrubbing agent is not depleted. Use Figure 1 to record all data.

10.1.1 Zero Calibration. For both the O_2 and CO cells, introduce zero gas to the measurement system (e.g., at the calibration assembly) and record the concentration reading every minute until readings are constant for at least two consecutive minutes. Include the time and sample flow rate. Repeat the steps in this section at least once to verify the zero calibration for each component gas.

10.1.2 Zero Calibration Tolerance. For each zero gas introduction, the zero level output must be less than or equal to ± 3 percent of the up-scale gas value or ± 1 ppm, whichever is less restrictive, for the CO channel and less than or equal to ± 0.3 percent O_2 for the O_2 channel.

10.1.3 Up-Scale Calibration. Individually introduce each calibration gas to the measurement system (e.g., at the calibration assembly) and record the start time. Record all EC cell output responses and the flow rate during this “sample conditioning phase” once per minute until readings are constant for at least two minutes. Then begin the “measurement data phase” and record readings every 15 seconds for a total of two minutes, or as otherwise required. Finally, perform the “refresh phase” by introducing dry air, free from CO and other combustion gases, until readings are constant for at least two consecutive minutes. Then repeat the steps in this section at least once to verify the calibration for each component gas. Introduce all gases to flow through the entire sample handling system (i.e., at the exit end of the sampling probe or the calibration assembly).

10.1.4 Up-Scale Calibration Error. The mean of the difference of the “measurement data phase” readings from the reported standard gas value must be less than or equal to ± 5 percent or ± 1 ppm for CO or ± 0.5 percent O_2 , whichever is less restrictive, respectively. The maximum allowable deviation from the mean measured value of any single “measurement data phase” reading must be less than or equal to ± 2 percent or ± 1 ppm for CO or ± 0.5 percent O_2 , whichever is less restrictive, respectively.

10.2 Post-Sampling Calibration Check. Conduct a stack gas post-sampling calibration check after the stack gas sampling run or set of runs and within 12 hours of the initial calibration. Conduct up-scale and zero calibration checks using the protocol in Section 10.1. Make no changes to the sampling system or EC cell calibration until all post-sampling calibration checks have been recorded. If either the zero or up-scale calibration error exceeds the respective specification in Sections 10.1.2 and 10.1.4 then all measurement data collected since the previous successful calibrations are invalid and re-calibration and re-sampling are required. If the sampling system is disassembled or the EC cell calibration is adjusted, repeat the calibration check before conducting the next analyzer sampling run.

11.0 Analytical Procedure

The analytical procedure is fully discussed in Section 8.

12.0 Calculations and Data Analysis

Determine the CO and O_2 concentrations for each stack gas sampling run by calculating the mean gas concentrations of the data recorded during the “measurement data phase”.

13.0 Protocol Performance

Use the following protocols to verify consistent analyzer performance during each field sampling day.

13.1 Measurement Data Phase Performance Check. Calculate the mean of the readings from the “measurement data phase”. The maximum allowable deviation from the mean for each of the individual readings is ± 2 percent, or ± 1 ppm, whichever is less restrictive. Record the mean value and maximum deviation for each gas monitored. Data must conform to Section 10.1.4. The EC cell flow rate must conform to the specification in Section 8.3.

Example: A measurement data phase is invalid if the maximum deviation of any single reading comprising that mean is greater than ± 2 percent *or ± 1 ppm (the default criteria). For example, if the mean = 30 ppm, single readings of below 29 ppm and above 31 ppm are disallowed*).

13.2 Interference Check. Before the initial use of the EC cell and interference gas scrubber in the field, and semi-annually thereafter, challenge the interference gas scrubber with NO and NO_2 gas standards that are generally recognized as representative of diesel-fueled engine NO and NO_2 emission values. Record the responses displayed by the CO EC cell and other pertinent data on Figure 1 or a similar form.

13.2.1 Interference Response. The combined NO and NO_2 interference response should be less than or equal to ± 5 percent of the up-scale CO calibration gas concentration.

13.3 Repeatability Check. Conduct the following check once for each nominal range that is to be used on the CO EC cell within 5 days prior to each field sampling program. If a field sampling program lasts longer than 5 days, repeat this check every 5 days. Immediately repeat the check if the EC cell is replaced or if the EC cell is exposed to gas concentrations greater than 150 percent of the highest up-scale gas concentration.

13.3.1 Repeatability Check Procedure. Perform a complete EC cell sampling run (all three phases) by introducing the CO calibration gas to the measurement system and record the response. Follow Section 10.1.3. Use Figure 1 to record all data. Repeat the run three times for a total of four complete runs. During the four repeatability check runs, do not adjust the system except where necessary to achieve the correct calibration gas flow rate at the analyzer.

13.3.2 Repeatability Check Calculations. Determine the highest and lowest average “measurement data phase” CO concentrations from the four repeatability check runs and record the results on Figure 1 or a similar form. The absolute value of the difference between the maximum and minimum average values recorded must not vary more than ± 3 percent or ± 1 ppm of the up-scale gas value, whichever is less restrictive.

14.0 Pollution Prevention (Reserved)

15.0 Waste Management (Reserved)

16.0 Alternative Procedures (Reserved)

17.0 References

(1) “Development of an Electrochemical Cell Emission Analyzer Test Protocol”, Topical Report, Phil Juneau, Emission Monitoring, Inc., July 1997.

(2) “Determination of Nitrogen Oxides, Carbon Monoxide, and Oxygen Emissions from Natural Gas-Fired Engines, Boilers, and Process Heaters Using Portable Analyzers”, EMC Conditional Test Protocol 30 (CTM-30), Gas Research Institute Protocol GRI-96/0008, Revision 7, October 13, 1997.

(3) “ICAC Test Protocol for Periodic Monitoring”, EMC Conditional Test Protocol 34 (CTM-034), The Institute of Clean Air Companies, September 8, 1999.

(4) “Code of Federal Regulations”, Protection of Environment, 40 CFR, Part 60, Appendix A, Methods 1-4; 10.

Table 1: Appendix A—Sampling Run Data.

Facility_____ Engine I.D._____ Date_____											
Run Type:	(_)				(_)			(_)			(_)
(X)	Pre-Sample Calibration				Stack Gas Sample			Post-Sample Cal. Check			Repeatability Check
Run #	1	1	2	2	3	3	4	4	Time	Scrub. OK	Flow- Rate

Gas	O_2	CO	O_2	CO	O_2	CO	O_2	CO			
Sample Cond. Phase											
"											
"											
"											
"											
Measurement Data Phase											
"											
"											
"											
"											
"											
"											
"											
"											
"											
Mean											
Refresh Phase											
"											
"											
"											
"											

[78 FR 6721, Jan. 30, 2013]

Attachment H
To Part 70 Operating Permit Renewal No. T089-29907-00121

[Downloaded from the eCFR on November 7, 2013]

Electronic Code of Federal Regulations

Title 40: Protection of Environment

Part 63, Subpart L—National Emission Standards for Coke Oven Batteries

Source: 58 FR 57911, Oct. 27, 1993, unless otherwise noted.

§63.300 Applicability.

(a) Unless otherwise specified in §§63.306, 63.307, and 63.311, the provisions of this subpart apply to existing by-product coke oven batteries at a coke plant and to existing nonrecovery coke oven batteries at a coke plant on and after the following dates:

(1) December 31, 1995, for existing by-product coke oven batteries subject to emission limitations in §63.302(a)(1) or existing nonrecovery coke oven batteries subject to emission limitations in §63.303(a);

(2) January 1, 2003, for existing by-product coke oven batteries subject to emission limitations in §63.302(a)(2);

(3) July 14, 2005, for existing by-product coke oven batteries subject to emission limitations in §63.302(a)(3) and for nonrecovery coke oven batteries subject to the emission limitations and requirements in §63.303(b)(3) or (c);

(4) Upon startup for a new nonrecovery coke oven battery subject to the emission limitations and requirements in §63.303(b), (c), and (d). A new nonrecovery coke oven battery subject to the requirements in §63.303(d) is one for which construction or reconstruction commenced on or after August 9, 2004;

(5) November 15, 1993, for existing by-product and nonrecovery coke oven batteries subject to emission limitations in §63.304(b)(1) or 63.304(c);

(6) January 1, 1998, for existing by-product coke oven batteries subject to emission limitations in §63.304(b)(2) or 63.304(b)(7); and

(7) January 1, 2010, for existing by-product coke oven batteries subject to emission limitations in §63.304(b)(3) or 63.304(b)(7).

(b) The provisions for new sources in §§63.302(b), 63.302(c), and 63.303(b) apply to each greenfield coke oven battery and to each new or reconstructed coke oven battery at an existing coke plant if the coke oven battery results in an increase in the design capacity of the coke plant as of November 15, 1990, (including any capacity qualifying under §63.304(b)(6), and the capacity of any coke oven battery subject to a construction permit on November 15, 1990, which commenced operation before October 27, 1993.

(c) The provisions of this subpart apply to each brownfield coke oven battery, each padup rebuild, and each cold-idle coke oven battery that is restarted.

(d) The provisions of §§63.304(b)(2)(i)(A) and 63.304(b)(3)(i) apply to each foundry coke producer as follows:

(1) A coke oven battery subject to §63.304(b)(2)(i)(A) or §63.304(b)(3)(i) must be a coke oven battery that on January 1, 1992, was owned or operated by a foundry coke producer; and

(2)(i) A coke oven battery owned or operated by an integrated steel producer on January 1, 1992, and listed in paragraph (d)(2)(ii) of this section, that was sold to a foundry coke producer before November 15, 1993, shall be

deemed for the purposes of paragraph (d)(1) of this section to be owned or operated by a foundry coke producer on January 1, 1992.

(ii) The coke oven batteries that may qualify under this provision are the following:

(A) The coke oven batteries at the Bethlehem Steel Corporation's Lackawanna, New York facility; and

(B) The coke oven batteries at the Rouge Steel Company's Dearborn, Michigan facility.

(e) The emission limitations set forth in this subpart shall apply at all times except during a period of startup, shutdown, or malfunction. The startup period shall be determined by the Administrator and shall not exceed 180 days.

(f) After October 28, 1992, rules of general applicability promulgated under section 112 of the Act, including the General Provisions, may apply to coke ovens provided that the topic covered by such a rule is not addressed in this subpart.

[58 FR 57911, Oct. 27, 1993, as amended at 70 FR 20012, Apr. 15, 2005]

§63.301 Definitions.

Terms used in this subpart are defined in the Act or in this section as follows:

Administrator means the Administrator of the United States Environmental Protection Agency or his or her authorized representative (e.g., a State that has been delegated the authority to implement the provisions of this subpart or its designated agent).

Brownfield coke oven battery means a new coke oven battery that replaces an existing coke oven battery or batteries with no increase in the design capacity of the coke plant as of November 15, 1990 (including capacity qualifying under §63.304(b)(6), and the capacity of any coke oven battery subject to a construction permit on November 15, 1990, which commenced operation before October 27, 1993.

Bypass/bleeder stack means a stack, duct, or offtake system that is opened to the atmosphere and used to relieve excess pressure by venting raw coke oven gas from the collecting main to the atmosphere from a by-product coke oven battery, usually during emergency conditions.

By-product coke oven battery means a source consisting of a group of ovens connected by common walls, where coal undergoes destructive distillation under positive pressure to produce coke and coke oven gas, from which by-products are recovered. Coke oven batteries in operation as of April 1, 1992, are identified in appendix A to this subpart.

Certified observer means a visual emission observer, certified under (if applicable) Method 303 and Method 9 (if applicable) and employed by the Administrator, which includes a delegated enforcement agency or its designated agent. For the purpose of notifying an owner or operator of the results obtained by a certified observer, the person does not have to be certified.

Charge or *charging period* means, for a by-product coke oven battery, the period of time that commences when coal begins to flow into an oven through a topside port and ends when the last charging port is recapped. For a nonrecovery coke oven battery, *charge or charging period* means the period of time that commences when coal begins to flow into an oven and ends when the push side door is replaced.

Coke oven battery means either a by-product or nonrecovery coke oven battery.

Coke oven door means each end enclosure on the pusher side and the coking side of an oven. The chuck, or leveler-bar, door is part of the pusher side door. A *coke oven door* includes the entire area on the vertical face of a coke oven between the bench and the top of the battery between two adjacent buckstays.

Cold-idle coke oven battery means an existing coke oven battery that has been shut down, but is not dismantled.

Collecting main means any apparatus that is connected to one or more offtake systems and that provides a passage for conveying gases under positive pressure from the by-product coke oven battery to the by-product recovery system.

Collecting main repair means any measure to stop a collecting main leak on a long-term basis. A repair measure in general is intended to restore the integrity of the collecting main by returning the main to approximately its design specifications or its condition before the leak occurred. A repair measure may include, but is not limited to, replacing a section of the collecting main or welding the source of the leak.

Consecutive charges means charges observed successively, excluding any charge during which the observer's view of the charging system or topside ports is obscured.

Design capacity means the original design capacity of a coke oven battery, expressed in megagrams per year of furnace coke.

Foundry coke producer means a coke producer that is not and was not on January 1, 1992, owned or operated by an integrated steel producer and had on January 1, 1992, an annual design capacity of less than 1.25 million megagrams per year (1.38 million tons per year) (not including any capacity satisfying the requirements of §63.300(d)(2) or §63.304(b)(6)).

Greenfield coke oven battery means a coke oven battery for which construction is commenced at a plant site (where no coke oven batteries previously existed) after December 4, 1992.

Integrated steel producer means a company or corporation that produces coke, uses the coke in a blast furnace to make iron, and uses the iron to produce steel. These operations may be performed at different plant sites within the corporation.

Malfunction means any sudden, infrequent, and not reasonably preventable failure of air pollution control equipment, process equipment, or a process to operate in a normal or usual manner which causes, or has the potential to cause, the emission limitations in an applicable standard to be exceeded. Failures caused in part by poor maintenance or careless operation are not *malfunctions.*

New shed means a shed for which construction commenced after September 15, 1992. The shed at Bethlehem Steel Corporation's Bethlehem plant on Battery A is deemed not to be a *new shed*.

Nonrecovery coke oven battery means a source consisting of a group of ovens connected by common walls and operated as a unit, where coal undergoes destructive distillation under negative pressure to produce coke, and which is designed for the combustion of the coke oven gas from which by-products are not recovered.

Offtake system means any individual oven apparatus that is stationary and provides a passage for gases from an oven to a coke oven battery collecting main or to another oven. Offtake system components include the standpipe and standpipe caps, goosenecks, stationary jumper pipes, mini-standpipes, and standpipe and gooseneck connections.

Oven means a chamber in the coke oven battery in which coal undergoes destructive distillation to produce coke.

Padup rebuild means a coke oven battery that is a complete reconstruction of an existing coke oven battery on the same site and pad without an increase in the design capacity of the coke plant as of November 15, 1990 (including any capacity qualifying under §63.304(b)(6), and the capacity of any coke oven battery subject to a construction permit on November 15, 1990, which commenced operation before October 27, 1993. The Administrator may determine that a project is a *padup rebuild* if it effectively constitutes a replacement of the battery above the pad, even if some portion of the brickwork above the pad is retained.

Pushing, for the purposes of §63.305, means that coke oven operation that commences when the pushing ram starts into the oven to push out coke that has completed the coking cycle and ends when the quench car is clear of the coke side shed.

Run means the observation of visible emissions from topside port lids, offtake systems, coke oven doors, or the charging of a coke oven that is made in accordance with and is valid under Methods 303 or 303A in appendix A to this part.

Shed means a structure for capturing coke oven emissions on the coke side or pusher side of the coke oven battery, which routes the emissions to a control device or system.

Short coke oven battery means a coke oven battery with ovens less than 6 meters (20 feet) in height.

Shutdown means the operation that commences when pushing has occurred on the first oven with the intent of pushing the coke out of all of the ovens in a coke oven battery without adding coal, and ends when all of the ovens of a coke oven battery are empty of coal or coke.

Standpipe cap means an apparatus used to cover the opening in the gooseneck of an offtake system.

Startup means that operation that commences when the coal begins to be added to the first oven of a coke oven battery that either is being started for the first time or that is being restarted and ends when the doors have been adjusted for maximum leak reduction and the collecting main pressure control has been stabilized. Except for the first startup of a coke oven battery, a startup cannot occur unless a shutdown has occurred.

Tall coke oven battery means a coke oven battery with ovens 6 meters (20 feet) or more in height.

Temporary seal means any measure, including but not limited to, application of luting or packing material, to stop a collecting main leak until the leak is repaired.

Topside port lid means a cover, removed during charging or decarbonizing, that is placed over the opening through which coal can be charged into the oven of a by-product coke oven battery.

[58 FR 57911, Oct. 27, 1993, as amended at 65 FR 62215, Oct. 17, 2000; 71 FR 20456, Apr. 20, 2006]

§63.302 Standards for by-product coke oven batteries.

(a) Except as provided in §63.304 or §63.305, on and after the dates specified in this paragraph, no owner or operator shall cause to be discharged or allow to be discharged to the atmosphere, coke oven emissions from each affected existing by-product coke oven battery that exceed any of the following emission limitations or requirements:

(1) On and after December 31, 1995;

(i) For coke oven doors;

(A) 6.0 percent leaking coke oven doors for each tall by-product coke oven battery, as determined according to the procedures in §63.309(d)(1); and

(B) 5.5 percent leaking coke oven doors for each short by-product coke oven battery, as determined according to the procedures in §63.309(d)(1);

(ii) 0.6 percent leaking topside port lids, as determined by the procedures in §63.309(d)(1);

(iii) 3.0 percent leaking offtake system(s), as determined by the procedures in §63.309(d)(1); and

(iv) 12 seconds of visible emissions per charge, as determined by the procedures in §63.309(d)(2).

(2) On and after January 1, 2003, unless the Administrator promulgates more stringent limits pursuant to section 112(f) of the Act;

(i) 5.5 percent leaking coke oven doors for each tall by-product coke oven battery, as determined by the procedures in §63.309(d)(1); and

(ii) 5.0 percent leaking coke oven doors for each short by-product coke oven battery, as determined by the procedures in §63.309(d)(1).

(3) On and after July 14, 2005;

(i) 4.0 percent leaking coke oven doors for each tall by-product coke oven battery and for each by-product coke oven battery owned or operated by a foundry coke producer, as determined by the procedures in §63.309(d)(1);

(ii) 3.3 percent leaking coke oven doors for each by-product coke oven battery not subject to the emission limitation in paragraph (a)(3)(i) of this section, as determined by the procedures in §63.309(d)(1);

(iii) 0.4 percent leaking topside port lids, as determined by the procedures in §63.309(d)(1);

(iv) 2.5 percent leaking offtake system(s), as determined by the procedures in §63.309(d)(1); and

(v) 12 seconds of visible emissions per charge, as determined by the procedures in §63.309(d)(2).

(b) Except as provided in paragraph (c) of this section, no owner or operator shall cause to be discharged or allow to be discharged to the atmosphere, coke oven emissions from a by-product coke oven battery subject to the applicability requirements in §63.300(b) that exceed any of the following emission limitations:

(1) 0.0 percent leaking coke oven doors, as determined by the procedures in §63.309(d)(1);

(2) 0.0 percent leaking topside port lids, as determined by the procedures in §63.309(d)(1);

(3) 0.0 percent leaking offtake system(s), as determined by the procedures in §63.309(d)(1); and

(4) 34 seconds of visible emissions per charge, as determined by the procedures in §63.309(d)(2).

(c) The emission limitations in paragraph (b) of this section do not apply to the owner or operator of a by-product coke oven battery that utilizes a new recovery technology, including but not limited to larger size ovens, operation under negative pressure, and processes with emission points different from those regulated under this subpart. An owner or operator constructing a new by-product coke oven battery or reconstructing an existing by-product recovery battery that utilizes a new recovery technology shall:

(1) Notify the Administrator of the intention to do so, as required in §63.311(c); and

(2) Submit, for the determination under section 112(g)(2)(B) of the Act, and as part of the application for permission to construct or reconstruct, all information and data requested by the Administrator for the determination of applicable emission limitations and requirements for that by-product coke oven battery.

(d) Emission limitations and requirements applied to each coke oven battery utilizing a new recovery technology shall be less than the following emission limitations or shall result in an overall annual emissions rate for coke oven emissions for the battery that is lower than that obtained by the following emission limitations:

(1) 4.0 percent leaking coke oven doors on tall by-product coke oven batteries, as determined by the procedures in §63.309(d)(1);

(2) 3.3 percent leaking coke oven doors on short by-product coke oven batteries, as determined by the procedures in §63.309(d)(1);

(3) 2.5 percent leaking offtake system(s), as determined by the procedures in §63.309(d)(1);

(4) 0.4 percent leaking topside port lids, as determined by the procedures in §63.309(d)(1); and

(5) 12 seconds of visible emissions per charge, as determined by the procedures in §63.309(d)(2).

[58 FR 57911, Oct. 27, 1993, as amended at 70 FR 20013, Apr. 15, 2005]

§63.303 Standards for nonrecovery coke oven batteries.

(a) Except as provided in §63.304, on and after December 31, 1995, no owner or operator shall cause to be discharged or allow to be discharged to the atmosphere coke oven emissions from each affected existing nonrecovery coke oven battery that exceed any of the following emission limitations or requirements:

(1) For coke oven doors;

(i) 0.0 percent leaking coke oven doors, as determined by the procedures in §63.309(d)(1); or

(ii) The owner or operator shall monitor and record, once per day for each day of operation, the pressure in each oven or in a common battery tunnel to ensure that the ovens are operated under a negative pressure.

(2) For charging operations, the owner or operator shall implement, for each day of operation, the work practices specified in §63.306(b)(6) and record the performance of the work practices as required in §63.306(b)(7).

(b) No owner or operator shall cause to be discharged or allow to be discharged to the atmosphere coke oven emissions from each affected new nonrecovery coke oven battery subject to the applicability requirements in §63.300(b) that exceed any of the following emission limitations or requirements:

(1) For coke oven doors;

(i) 0.0 percent leaking coke oven doors, as determined by the procedures in §63.309(d)(1); or

(ii) The owner or operator shall monitor and record, once per day for each day of operation, the pressure in each oven or in a common battery tunnel to ensure that the ovens are operated under a negative pressure;

(2) For charging operations, the owner or operator shall install, operate, and maintain an emission control system for the capture and collection of emissions in a manner consistent with good air pollution control practices for minimizing emissions from the charging operation;

(3) For charging operations, the owner or operator shall implement, for each day of operation, the work practices specified in §63.306(b)(6) and record the performance of the work practices as required in §63.306(b)(7).

(4) 0.0 percent leaking topside port lids, as determined by the procedures in §63.309(d)(1) (if applicable to the new nonrecovery coke oven battery); and

(5) 0.0 percent leaking offtake system(s), as determined by the procedures in §63.309(d)(1) (if applicable to the new nonrecovery coke oven battery).

(c) Except as provided in §63.304, the owner or operator of any nonrecovery coke oven battery shall meet the work practice standards in paragraphs (c)(1) and (2) of this section.

(1) The owner or operator shall observe each coke oven door after charging and record the oven number of any door from which visible emissions occur. Emissions from coal spilled during charging or from material trapped within the seal area of the door are not considered to be a door leak if the owner or operator demonstrates that the oven is under negative pressure, and that no emissions are visible from the top of the door or from dampers on the door.

(2) Except as provided in paragraphs (c)(2)(i) and (ii) of this section, if a coke oven door leak is observed at any time during the coking cycle, the owner or operator shall take corrective action and stop the leak within 15 minutes from the time the leak is first observed. No additional leaks are allowed from doors on that oven for the remainder of that oven's coking cycle.

(i) Except as provided in paragraph (c)(2)(ii) of this section, the owner or operator may take corrective action and stop the leak within 45 minutes (instead of 15 minutes) from the time the leak is first observed for a maximum of two times per battery in any semiannual reporting period.

(ii) If a worker must enter a cokeside shed to stop a leaking door under the cokeside shed, the owner or operator shall take corrective action and stop the door leak within 45 minutes (instead of 15 minutes) from the time the leak is first observed. The evacuation system and control device for the cokeside shed must be operated at all times there is a leaking door under the cokeside shed.

(d) The owner or operator of a new nonrecovery coke oven battery shall meet the emission limitations and work practice standards in paragraphs (d)(1) through (4) of this section.

(1) The owner or operator shall not discharge or cause to be discharged to the atmosphere from charging operations any fugitive emissions that exhibit an opacity greater than 20 percent, as determined by the procedures in §63.309(j).

(2) The owner or operator shall not discharge or cause to be discharged to the atmosphere any emissions of particulate matter (PM) from a charging emissions control device that exceed 0.0081 pounds per ton (lbs/ton) of dry coal charged, as determined by the procedures in §63.309(k).

(3) The owner or operator shall observe the exhaust stack of each charging emissions control device at least once each day of operation during charging to determine if visible emissions are present and shall record the results of each daily observation or the reason why conditions did not permit a daily observation. If any visible emissions are observed, the owner or operator must:

(i) Take corrective action to eliminate the presence of visible emissions;

(ii) Record the cause of the problem creating the visible emissions and the corrective action taken;

(iii) Conduct visible emission observations according to the procedures in §63.309(m) within 24 hours after detecting the visible emissions; and

(iv) Report any 6-minute average, as determined according to the procedures in §63.309(m), that exceeds 10 percent opacity as a deviation in the semiannual compliance report required by §63.311(d).

(4) The owner or operator shall develop and implement written procedures for adjusting the oven uptake damper to maximize oven draft during charging and for monitoring the oven damper setting during each charge to ensure that the damper is fully open.

[58 FR 57911, Oct. 27, 1993, as amended at 70 FR 20013, Apr. 15, 2005]

§63.304 Standards for compliance date extension.

(a) An owner or operator of an existing coke oven battery (including a cold-idle coke oven battery), a padup rebuild, or a brownfield coke oven battery, may elect an extension of the compliance date for emission limits to be promulgated pursuant to section 112(f) of the Act in accordance with section 112(i)(8). To receive an extension of the compliance date from January 1, 2003, until January 1, 2020, the owner or operator shall notify the Administrator as

described in §63.311(c) that the battery will comply with the emission limitations and requirements in this section in lieu of the applicable emission limitations in §63.302 or 63.303.

(b) Except as provided in paragraphs (b)(4), (b)(5), and (b)(7) of this section and in §63.305, on and after the dates specified in this paragraph, no owner or operator shall cause to be discharged or allow to be discharged to the atmosphere coke oven emissions from a by-product coke oven battery that exceed any of the following emission limitations:

(1) On and after November 15, 1993;

(i) 7.0 percent leaking coke oven doors, as determined by the procedures in §63.309(d)(1);

(ii) 0.83 percent leaking topside port lids, as determined by the procedures in §63.309(d)(1);

(iii) 4.2 percent leaking offtake system(s), as determined by the procedures in §63.309(d)(1); and

(iv) 12 seconds of visible emissions per charge, as determined by the procedures in §63.309(d)(2).

(2) On and after January 1, 1998;

(i) For coke oven doors:

(A) 4.3 percent leaking coke oven doors for each tall by-product coke oven battery and for each by-product coke oven battery owned or operated by a foundry coke producer, as determined by the procedures in §63.309(d)(1); and

(B) 3.8 percent leaking coke oven doors on each by-product coke oven battery not subject to the emission limitation in paragraph (b)(2)(i)(A) of this section, as determined by the procedures in §63.309(d)(1);

(ii) 0.4 percent leaking topside port lids, as determined by the procedures in §63.309(d)(1);

(iii) 2.5 percent leaking offtake system(s), as determined by the procedures in §63.309(d)(1); and

(iv) 12 seconds of visible emissions per charge, as determined by the procedures in §63.309(d)(2).

(3) On and after January 1, 2010, unless the Administrator promulgates more stringent limits pursuant to section 112(i)(8)(C) of the Act;

(i) 4.0 percent leaking coke oven doors on each tall by-product coke oven battery and for each by-product coke oven battery owned or operated by a foundry coke producer, as determined by the procedures in §63.309(d)(1); and

(ii) 3.3 percent leaking coke oven doors for each by-product coke oven battery not subject to the emission limitation in paragraph (b)(3)(i) of this section, as determined by the procedures in §63.309(d)(1).

(4) No owner or operator shall cause to be discharged or allow to be discharged to the atmosphere coke oven emissions from a brownfield or padup rebuild by-product coke oven battery, other than those specified in paragraph (b)(4)(v) of this section, that exceed any of the following emission limitations:

(i) For coke oven doors;

(A) 4.0 percent leaking coke oven doors for each tall by-product coke oven battery, as determined by the procedures in §63.309(d)(1); and

(B) 3.3 percent leaking coke oven doors on each short by-product coke oven battery, as determined by the procedures in §63.309(d)(1);

(ii) 0.4 percent leaking topside port lids, as determined by the procedures in §63.309(d)(1);

(iii) 2.5 percent leaking offtake system(s), as determined by the procedures in §63.309(d)(1); and

(iv) 12 seconds of visible emissions per charge, as determined by the procedures in §63.309(d)(2).

(v) The requirements of paragraph (b)(4) of this section shall not apply and the requirements of paragraphs (b)(1), (b)(2), and (b)(3) of this section do apply to the following brownfield or padup rebuild coke oven batteries:

(A) Bethlehem Steel-Burns Harbor, Battery No. 2;

(B) National Steel-Great Lakes, Battery No. 4; and

(C) Koppers-Woodward, Battery No. 3.

(vi) To retain the exclusion provided in paragraph (b)(4)(v) of this section, a coke oven battery specified in paragraph (b)(4)(v) of this section shall commence construction not later than July 1, 1996, or 1 year after obtaining a construction permit, whichever is earlier.

(5) The owner or operator of a cold-idle coke oven battery that shut down on or after November 15, 1990, shall comply with the following emission limitations:

(i) For a brownfield coke oven battery or a padup rebuild coke oven battery, coke oven emissions shall not exceed the emission limitations in paragraph (b)(4) of this section; and

(ii) For a cold-idle battery other than a brownfield or padup rebuild coke oven battery, coke oven emissions shall not exceed the emission limitations in paragraphs (b)(1) through (b)(3) of this section.

(6) The owner or operator of a cold-idle coke oven battery that shut down prior to November 15, 1990, shall submit a written request to the Administrator to include the battery in the design capacity of a coke plant as of November 15, 1990. A copy of the request shall also be sent to Director, Office of Air Quality Planning and Standards, U.S. Environmental Protection Agency, Research Triangle Park, NC 27711. The Administrator will review and approve or disapprove a request according to the following procedures:

(i) Requests will be reviewed for completeness in the order received. A complete request shall include:

(A) Battery identification;

(B) Design information, including the design capacity and number and size of ovens; and

(C) A brief description of the owner or operator's plans for the cold-idle battery, including a statement whether construction of a padup rebuild or a brownfield coke oven battery is contemplated.

(ii) A complete request shall be approved if the design capacity of the battery and the design capacity of all previous approvals does not exceed the capacity limit in paragraph (b)(6)(iii) of this section.

(iii) The total nationwide coke capacity of coke oven batteries that receive approval under paragraph (b)(6) of this section shall not exceed 2.7 million Mg/yr (3.0 million ton/yr).

(iv) If a construction permit is required, an approval shall lapse if a construction permit is not issued within 3 years of the approval date, or if the construction permit lapses.

(v) If a construction permit is not required, an approval will lapse if the battery is not restarted within 2 years of the approval date.

The owner or operator of a by-product coke oven battery with fewer than 30 ovens may elect to comply with an emission limitation of 2 or fewer leaking coke oven doors, as determined by the procedures in §63.309(d)(4), as an alternative to the emission limitation for coke oven doors in paragraphs (b)(2)(i), (b)(3) (i) through (ii), (b)(4)(i), (b)(5), and (b)(6) of this section.

(c) On and after November 15, 1993, no owner or operator shall cause to be discharged or allow to be discharged to the atmosphere coke oven emissions from an existing nonrecovery coke oven battery that exceed any of the emission limitations or requirements in §63.303(a).

(d) Each owner or operator of an existing coke oven battery qualifying for a compliance date extension pursuant to this section shall make available, no later than January 1, 2000, to the surrounding communities the results of any risk assessment performed by the Administrator to determine the appropriate level of any emission standard established by the Administrator according to section 112(f) of the Act.

[58 FR 57911, Oct. 27, 1993, as amended at 65 FR 62215, Oct. 17, 2000]

§63.305 Alternative standards for coke oven doors equipped with sheds.

(a) The owner or operator of a new or existing coke oven battery equipped with a shed for the capture of coke oven emissions from coke oven doors and an emission control device for the collection of the emissions may comply with an alternative to the applicable visible emission limitations for coke oven doors in §§63.302 and 63.304 according to the procedures and requirements in this section.

(b) To qualify for approval of an alternative standard, the owner or operator shall submit to the Administrator a test plan for the measurement of emissions. A copy of the request shall also be sent to the Director, Office of Air Quality Planning and Standards, U.S. Environmental Protection Agency, Research Triangle Park, NC 27711. The plan shall describe the procedures to be used for the measurement of particulate matter; the parameters to be measured that affect the shed exhaust rate (e.g., damper settings, fan power) and the procedures for measuring such parameters; and if applicable under paragraph (c)(5)(ii) of this section, the procedures to be used for the measurement of benzene soluble organics, benzene, toluene, and xylene emitted from the control device for the shed. The owner or operator shall notify the Administrator at least 30 days before any performance test is conducted.

(c) A complete test plan is deemed approved if no disapproval is received within 60 days of the submittal to the Administrator. After approval of the test plan, the owner or operator shall;

(1) Determine the efficiency of the control device for removal of particulate matter by conducting measurements at the inlet and the outlet of the emission control device using Method 5 in appendix A to part 60 of this chapter, with the filter box operated at ambient temperature and in a manner to avoid condensation, with a backup filter;

(2) Measure the visible emissions from coke oven doors that escape capture by the shed using Method 22 in appendix A to part 60 of this chapter. For the purpose of approval of an alternative standard, no visible emissions may escape capture from the shed.

(i) Visible emission observations shall be taken during conditions representative of normal operations, except that pushing shall be suspended and pushing emissions shall have cleared the shed; and

(ii) Method 22 observations shall be performed by an observer certified according to the requirements of Method 9 in appendix A to part 60 of this chapter. The observer shall allow pushing emissions to be evacuated (typically 1 to 2 minutes) before making observations;

(3) Measure the opacity of emissions from the control device using Method 9 in appendix A to part 60 of this chapter during conditions representative of normal operations, including pushing; and

(i) If the control device has multiple stacks, the owner or operator shall use an evaluation based on visible emissions and opacity to select the stack with the highest opacity for testing under this section;

(ii) The highest opacity, expressed as a 6-minute average, shall be used as the opacity standard for the control device.

(4) Thoroughly inspect all compartments of each air cleaning device prior to the performance test for proper operation and for changes that signal the potential for malfunction, including the presence of tears, holes, and abrasions in filter bags; damaged seals; and for dust deposits on the clean side of bags; and

(5) Determine the allowable percent leaking doors under the shed using either of the following procedures:

(i) Calculate the allowable percent leaking doors using the following equation:

$$PLD = \left[\frac{1.4(PLD_{std})^{2.5}}{(1.4 - eff/100)} \right]^{0.4} \qquad (Eq.\ 1)$$

where

PLD=Allowable percent leaking doors for alternative standard.

PLD_{std}=Applicable visible emission limitation of percent leaking doors under this subpart that would otherwise apply to the coke oven battery, converted to the single-run limit according to Table 1.

eff=Percent control efficiency for particulate matter for emission control device as determined according to paragraph (c)(1) of this section.

Table 1—Conversion to Single-Run Limit

30-run limit	Single-pass limit (98 percent level)
7.0	11.0
6.0	9.5
5.5	8.7
5.0	8.1
4.3	7.2
4.0	6.7
3.8	6.4
3.3	5.8

or;

(ii) Calculate the allowable percent leaking doors using the following procedures:

(A) Measure the total emission rate of benzene, toluene, and xylene exiting the control device using Method 18 in appendix A to part 60 of this chapter and the emission rate of benzene soluble organics entering the control device as described in the test plan submitted pursuant to paragraph (b) of this section; or

(B) Measure benzene, toluene, xylene, and benzene soluble organics in the gas in the collector main as described in the test plan submitted pursuant to paragraph (b) of this section; and

(C) Calculate the ratio (R) of benzene, toluene, and xylene to benzene soluble organics for the gas in the collector main, or as the sum of the outlet emission rates of benzene, toluene, and xylene, divided by the emission rate of benzene soluble organics as measured at the inlet to the control device; and

(D) Calculate the allowable percent leaking doors limit under the shed using the following equation:

$$PLD = \left[\frac{(R+1)(PLD_{std})^{2.5}}{(R+1-eff/100)} \right]^{0.4} \quad (Eq.\ 2)$$

where

R=Ratio of measured emissions of benzene, toluene, and xylene to measured emissions of benzene soluble organics.

(iii) If the allowable percent leaking coke oven doors is calculated to exceed 15 percent leaking coke oven doors under paragraphs (c)(5)(i) or (c)(5)(ii) of this section, the owner or operator shall use 15 percent leaking coke oven doors for the purposes of this section.

(6) Monitor the parameters that affect the shed exhaust flow rate.

(7) The owner or operator may request alternative sampling procedures to those specified in paragraph (c)(5)(ii) (A) and (B) of this section by submitting details on the procedures and the rationale for their use to the Administrator. Alternative procedures shall not be used without approval from the Administrator.

(8) The owner or operator shall inform the Administrator of the schedule for conducting testing under the approved test plan and give the Administrator the opportunity to observe the tests.

(d) After calculating the alternative standard for allowable percent leaking coke oven doors, the owner or operator shall submit the following information to the Administrator:

(1) Identity of the coke oven battery;

(2) Visible emission limitation(s) for percent leaking doors currently applicable to the coke oven battery under this subpart and known future limitations for percent leaking coke oven doors;

(3) A written report including:

(i) Appropriate measurements and calculations used to derive the allowable percent leaking coke oven doors requested as the alternative standard;

(ii) Appropriate visible emission observations for the shed and opacity observations for the control device for the shed, including an alternative opacity standard, if applicable, as described in paragraph (c)(3) of this section based on the highest 6-minute average; and

(iii) The parameter or parameters (e.g., fan power, damper position, or other) to be monitored and recorded to demonstrate that the exhaust flow rate measured during the test required by paragraph (c)(1) of this section is maintained, and the monitoring plan for such parameter(s).

(iv) If the application is for a new shed, one of the following demonstrations:

(A) A demonstration, using modeling procedures acceptable to the Administrator, that the expected concentrations of particulate emissions (including benzene soluble organics) under the shed at the bench level, when the proposed alternative standard was being met, would not exceed the expected concentrations of particulate emissions (including benzene soluble organics) if the shed were not present, the regulations under this subpart were met, and the battery was in compliance with federally enforceable limitations on pushing emissions; or

(B) A demonstration that the shed (including the evacuation system) has been designed in accordance with generally accepted engineering principles for the effective capture and control of particulate emissions (including benzene soluble organics) as measured at the shed's perimeter, its control device, and at the bench level.

(e) The Administrator will review the information and data submitted according to paragraph (d) of this section and may request additional information and data within 60 days of receipt of a complete request.

(1) Except for applications subject to paragraph (e)(3) of this section, the Administrator shall approve or disapprove an alternative standard as expeditiously as practicable. The Administrator shall approve an alternative standard, unless the Administrator determines that the approved test plan has not been followed, or any required calculations are incorrect, or any demonstration required under paragraph (d)(3)(iv) of this section does not satisfy the applicable criteria under that paragraph. If the alternative standard is disapproved, the Administrator will issue a written notification to the owner or operator within the 60-day period.

(2) The owner or operator shall comply with the applicable visible emission limitation for coke oven doors and all other requirements in this subpart prior to approval of an alternative standard. The owner or operator may apply for an alternative standard at any time after December 4, 1992.

(3) An application for an alternative standard to the standard in §63.304(b)(1)(i) for any shed that is not a new shed that is filed on or before June 15, 1993, is deemed approved if a notice of disapproval has not been received 60 days after submission of a complete request. An approval under paragraph (e)(3) of this section shall be valid for a period of 1 year.

(4) Notwithstanding the provisions of paragraph (e) of this section, no alternative standard shall be approved that exceeds 15 percent leaking coke oven doors (yard equivalent).

(f) After approval of an alternative standard, the owner or operator shall comply with the following requirements:

(1) The owner or operator shall not discharge or allow to be discharged to the atmosphere coke oven emissions from coke oven doors under sheds that exceed an approved alternative standard for percent leaking coke oven doors under sheds.

(i) All visible emission observations for compliance determinations shall be performed by a certified observer.

(ii) Compliance with the alternative standard for doors shall be determined by a weekly performance test conducted according to the procedures and requirements in §63.309(d)(5) and Method 303 in appendix A to this part.

(iii) If the visible emission limitation is achieved for 12 consecutive observations, compliance shall be determined by monthly rather than weekly performance tests. If any exceedance occurs during a performance test, weekly performance tests shall be resumed.

(iv) Observations taken at times other than those specified in paragraphs (f)(1)(ii) and (f)(1)(iii) of this section shall be subject to the provisions of §63.309(f).

(2) The certified observer shall monitor the visible coke oven emissions escaping capture by the shed on a weekly basis. The provision in paragraph (f)(6) of this section is applicable if visible coke oven emissions are observed during periods when pushing emissions have cleared the shed.

(3) The owner or operator shall not discharge or allow to be discharged to the atmosphere any visible emissions from the shed's control device exhibiting more than 0 percent opacity unless an alternative limit has been approved under paragraph (e) of this section.

(4) The opacity of emissions from the control device for the shed shall be monitored in accordance with the requirements of either paragraph (f)(4)(i) or (f)(4)(ii) of this section, at the election of the owner or operator.

(i) The owner or operator shall install, operate, and maintain a continuous opacity monitor, and record the output of the system, for the measurement of the opacity of emissions discharged from the emission control system.

(A) Each continuous opacity monitoring system shall meet the requirements of Performance Specification 1 in appendix B to part 60 of this chapter; and

(B) Each continuous opacity monitoring system shall be operated, calibrated, and maintained according to the procedures and requirements specified in part 52 of this chapter; or

(ii) A certified observer shall monitor and record at least once each day during daylight hours, opacity observations for the control device for the shed using Method 9 in appendix A to part 60 of this chapter.

(5) The owner or operator shall visually inspect the structural integrity of the shed at least once a quarter for defects, such as deterioration of sheet metal (e.g., holes in the shed), that may allow the escape of visible emissions.

(i) The owner or operator shall record the time and date a defect is first observed, the time and date the defect is corrected or repaired, and a brief description of repairs or corrective actions taken;

(ii) The owner or operator shall temporarily repair the defect as soon as possible, but no later than 5 days after detection of the defect;

(iii) Unless a major repair is required, the owner or operator shall perform a complete repair of the defect within 15 days of detection of the defect. If a major repair is required (e.g., replacement of large sections of the shed), the owner or operator shall submit a repair schedule to the enforcement agency.

(6) If the no visible emission limit for the shed specified in paragraph (f)(2) of this section is exceeded, the Administrator may require another test for the shed according to the approved test plan as specified in paragraph (c) of this section. If the certified observer observes visible coke oven emissions from the shed, except during periods of pushing or when pushing emissions have not cleared the shed, the owner or operator shall check to ensure that the shed and control device are working properly.

(7) The owner or operator shall monitor the parameter(s) affecting shed exhaust flow rate, and record data, in accordance with the approved monitoring plan for these parameters.

(8) The owner or operator shall not operate the exhaust system of the shed at an exhaust flow rate lower than that measured during the test required under paragraph (c)(1) of this section, as indicated by the monitored parameters.

(g) Each side of a battery subject to an alternative standard for doors under this section shall be treated separately for purposes of §§63.306(c) (plan implementation) and 63.306(d) (plan revisions) of this subpart. In making determinations under these provisions for the side of the battery subject to an alternative standard, the requirement that exceedances be independent shall not apply. During any period when work practices for doors for both sides of the battery are required to be implemented, §63.306(a)(3) shall apply in the same manner as if the provisions of a plan for a single emissions point were required to be implemented. Exceedances of the alternative standard for percent leaking doors under a shed is the only provision in this section implicating implementation of work practice requirements.

(h) Multiple exceedances of the visible emission limitation for door leaks and/or the provisions of an alternative standard under this section for door leaks at a battery on a single day shall be considered a single violation.

§63.306 Work practice standards.

(a) *Work practice plan.* On or before November 15, 1993, each owner or operator shall prepare and submit a written emission control work practice plan for each coke oven battery. The plan shall be designed to achieve compliance with visible emission limitations for coke oven doors, topside port lids, offtake systems, and charging operations under this subpart, or, for a coke oven battery not subject to visible emission limitations under this subpart, other federally enforceable visible emission limitations for these emission points.

(1) The work practice plan must address each of the topics specified in paragraph (b) of this section in sufficient detail and with sufficient specificity to allow the reviewing authority to evaluate the plan for completeness and enforceability.

(2) The initial plan and any revisions shall be submitted to the Administrator or the delegated State, local, or Tribal authority. The Administrator (or delegated State, local, or Tribal authority) may require revisions to the initial plan only where the Administrator (or delegated State, local, or Tribal authority) finds either that the plan does not address each subject area listed in paragraph (b) of this section for each emission point subject to a visible emission standard under this subpart, or that the plan in unenforceable because it contains requirements that are unclear.

(3) During any period of time that an owner or operator is required to implement the provisions of a plan for a particular emission point, the failure to implement one or more obligations under the plan and/or any recordkeeping requirement(s) under §63.311(f)(4) for the emission point during a particular day is a single violation.

(b) *Plan components.* The owner or operator shall organize the work practice plan to indicate clearly which parts of the plan pertain to each emission point subject to visible emission standards under this subpart. Each of the following provisions, at a minimum, shall be addressed in the plan:

(1) An initial and refresher training program for all coke plant operating personnel with responsibilities that impact emissions, including contractors, in job requirements related to emission control and the requirements of this subpart, including work practice requirements. Contractors with responsibilities that impact emission control may be trained by the owner or operator or by qualified contractor personnel; however, the owner or operator shall ensure that the contractor training program complies with the requirements of this section. The training program in the plan must include:

(i) A list, by job title, of all personnel that are required to be trained and the emission point(s) associated with each job title;

(ii) An outline of the subjects to be covered in the initial and refresher training for each group of personnel;

(iii) A description of the training method(s) that will be used (e.g., lecture, video tape);

(iv) A statement of the duration of initial training and the duration and frequency of refresher training;

(v) A description of the methods to be used at the completion of initial or refresher training to demonstrate and document successful completion of the initial and refresher training; and

(vi) A description of the procedure to be used to document performance of plan requirements pertaining to daily operation of the coke oven battery and its emission control equipment, including a copy of the form to be used, if applicable, as required under the plan provisions implementing paragraph (b)(7) of this section.

(2) Procedures for controlling emissions from coke oven doors on by-product coke oven batteries, including:

(i) A program for the inspection, adjustment, repair, and replacement of coke oven doors and jambs, and any other equipment for controlling emissions from coke oven doors, including a defined frequency of inspections, the method to be used to evaluate conformance with operating specifications for each type of equipment, and the method to be used to audit the effectiveness of the inspection and repair program for preventing exceedances;

(ii) Procedures for identifying leaks that indicate a failure of the emissions control equipment to function properly, including a clearly defined chain of command for communicating information on leaks and procedures for corrective action;

(iii) Procedures for cleaning all sealing surfaces of each door and jamb, including identification of the equipment that will be used and a specified schedule or frequency for the cleaning of sealing surfaces;

(iv) For batteries equipped with self-sealing doors, procedures for use of supplemental gasketing and luting materials, if the owner or operator elects to use such procedures as part of the program to prevent exceedances;

(v) For batteries equipped with hand-luted doors, procedures for luting and reluting, as necessary to prevent exceedances;

(vi) Procedures for maintaining an adequate inventory of the number of spare coke oven doors and jambs located onsite; and

(vii) Procedures for monitoring and controlling collecting main back pressure, including corrective action if pressure control problems occur.

(3) Procedures for controlling emissions from charging operations on by-product coke oven batteries, including:

(i) Procedures for equipment inspection, including the frequency of inspections, and replacement or repair of equipment for controlling emissions from charging, the method to be used to evaluate conformance with operating specifications for each type of equipment, and the method to be used to audit the effectiveness of the inspection and repair program for preventing exceedances;

(ii) Procedures for ensuring that the larry car hoppers are filled properly with coal;

(iii) Procedures for the alignment of the larry car over the oven to be charged;

(iv) Procedures for filling the oven (e.g., procedures for staged or sequential charging);

(v) Procedures for ensuring that the coal is leveled properly in the oven; and

(vi) Procedures and schedules for inspection and cleaning of offtake systems (including standpipes, standpipe caps, goosenecks, dampers, and mains), oven roofs, charging holes, topside port lids, the steam supply system, and liquor sprays.

(4) Procedures for controlling emissions from topside port lids on by-product coke oven batteries, including:

(i) Procedures for equipment inspection and replacement or repair of topside port lids and port lid mating and sealing surfaces, including the frequency of inspections, the method to be used to evaluate conformance with operating specifications for each type of equipment, and the method to be used to audit the effectiveness of the inspection and repair program for preventing exceedances; and

(ii) Procedures for sealing topside port lids after charging, for identifying topside port lids that leak, and procedures for resealing.

(5) Procedures for controlling emissions from offtake system(s) on by-product coke oven batteries, including:

(i) Procedures for equipment inspection and replacement or repair of offtake system components, including the frequency of inspections, the method to be used to evaluate conformance with operating specifications for each type of equipment, and the method to be used to audit the effectiveness of the inspection and repair program for preventing exceedances;

(ii) Procedures for identifying offtake system components that leak and procedures for sealing leaks that are detected; and

(iii) Procedures for dampering off ovens prior to a push.

(6) Procedures for controlling emissions from nonrecovery coke oven batteries including:

(i) Procedures for charging coal into the oven, including any special procedures for minimizing air infiltration during charging, maximizing the draft on the oven, and for replacing the door promptly after charging;

(ii) If applicable, procedures for the capture and control of charging emissions;

(iii) Procedures for cleaning coke from the door sill area for both sides of the battery after completing the pushing operation and before replacing the coke oven door;

(iv) Procedures for cleaning coal from the door sill area after charging and before replacing the push side door;

(v) Procedures for filling gaps around the door perimeter with sealant material, if applicable; and

(vi) Procedures for detecting and controlling emissions from smoldering coal.

(7) Procedures for maintaining, for each emission point subject to visible emission limitations under this subpart, a daily record of the performance of plan requirements pertaining to the daily operation of the coke oven battery and its emission control equipment, including:

(i) Procedures for recording the performance of such plan requirements; and

(ii) Procedures for certifying the accuracy of such records by the owner or operator.

(8) Any additional work practices or requirements specified by the Administrator according to paragraph (d) of this section.

(c) *Implementation of work practice plans.* On and after November 15, 1993, the owner or operator of a coke oven battery shall implement the provisions of the coke oven emission control work practice plan according to the following requirements:

(1) The owner or operator of a coke oven battery subject to visible emission limitations under this subpart on and after November 15, 1993, shall:

(i) Implement the provisions of the work practice plan pertaining to a particular emission point following the second independent exceedance of the visible emission limitation for the emission point in any consecutive 6-month period, by no later than 3 days after receipt of written notification of the second such exceedance from the certified observer. For the purpose of this paragraph (c)(1)(i), the second exceedance is “independent” if either of the following criteria is met:

(A) The second exceedance occurs 30 days or more after the first exceedance;

(B) In the case of coke oven doors, topside port lids, and offtake systems, the 29-run average, calculated by excluding the highest value in the 30-day period, exceeds the value of the applicable emission limitation; or

(C) In the case of charging emissions, the 29-day logarithmic average, calculated in accordance with Method 303 in appendix A to this part by excluding the valid daily set of observations in the 30-day period that had the highest arithmetic average, exceeds the value of the applicable emission limitation.

(ii) Continue to implement such plan provisions until the visible emission limitation for the emission point is achieved for 90 consecutive days if work practice requirements are implemented pursuant to paragraph (c)(1)(i) of this section. After the visible emission limitation for a particular emission point is achieved for 90 consecutive days, any exceedances prior to the beginning of the 90 days are not included in making a determination under paragraph (c)(1)(i) of this section.

(2) The owner or operator of a coke oven battery not subject to visible emission limitations under this subpart until December 31, 1995, shall:

(i) Implement the provisions of the work practice plan pertaining to a particular emission point following the second exceedance in any consecutive 6-month period of a federally enforceable emission limitation for that emission point for coke oven doors, topside port lids, offtake systems, or charging operations by no later than 3 days after receipt of written notification from the applicable enforcement agency; and

(ii) Continue to implement such plan provisions for 90 consecutive days after the most recent written notification from the enforcement agency of an exceedance of the visible emission limitation.

(d) *Revisions to plan.* Revisions to the work practice emission control plan will be governed by the provisions in this paragraph (d) and in paragraph (a)(2) of this section. The reviewing authority is the Administrator or the delegated State, local, or Tribal authority.

(1) The reviewing authority may request the owner or operator to review and revise as needed the work practice emission control plan for a particular emission point if there are 2 exceedances of the applicable visible emission limitation in the 6-month period that starts 30 days after the owner or operator is required to implement work practices under paragraph (c) of this section. In the case of a coke oven battery subject to visual emission limitations under this subpart, the second exceedance must be independent of the criteria in paragraph (c)(1)(i) of this section.

(2) The reviewing authority may not request the owner or operator to review and revise the plan more than twice in any 12 consecutive month period for any particular emission point unless the reviewing authority disapproves the plan according to the provisions in paragraph (d)(6) of this section.

(3) If the certified observer calculates that a second exceedance (or, if applicable, a second independent exceedance) has occurred, the certified observer shall notify the owner or operator. No later than 10 days after receipt of such a notification, the owner or operator shall notify the reviewing authority of any finding of whether work practices are related to the cause or the solution of the problem. The notification is subject to review by the reviewing authority according to the provisions in paragraph (d)(6) of this section.

(4) The owner or operator shall submit a revised work practice plan within 60 days of notification from the reviewing authority under paragraph (d)(1) of this section, unless the reviewing authority grants an extension of time to submit the revised plan.

(5) If the reviewing authority requires a plan revision, the reviewing authority may require the plan to address a subject area or areas in addition to those in paragraph (b) of this section, if the reviewing authority determines that without plan coverage of such an additional subject area, there is a reasonable probability of further exceedances of the visible emission limitation for the emission point for which a plan revision is required.

(6) The reviewing authority may disapprove a plan revision required under paragraph (d) of this section if the reviewing authority determines that the revised plan is inadequate to prevent exceedances of the visible emission limitation under this subpart for the emission point for which a plan revision is required or, in the case of a battery not subject to visual emission limitations under this subpart, other federally enforceable emission limitations for such emission point. The reviewing authority may also disapprove the finding that may be submitted pursuant to paragraph (d)(3) of this section if the reviewing authority determines that a revised plan is needed to prevent exceedances of the applicable visible emission limitations.

[58 FR 57911, Oct. 27, 1993, as amended at 68 FR 37345, June 23, 2003]

§63.307 Standards for bypass/bleeder stacks.

(a)(1) Except as otherwise provided in this section, on or before March 31, 1994, the owner or operator of an existing by-product recovery battery for which a notification was not submitted under paragraph (e)(1) of this section shall install a bypass/bleeder stack flare system that is capable of controlling 120 percent of the normal gas flow generated by the battery, which shall thereafter be operated and maintained.

(2) Coke oven emissions shall not be vented to the atmosphere through bypass/bleeder stacks, except through the flare system or the alternative control device as described in paragraph (d) of this section.

(3) The owner or operator of a brownfield coke oven battery or a padup rebuild shall install such a flare system before startup, and shall properly operate and maintain the flare system.

(b) Each flare installed pursuant to this section shall meet the following requirements:

(1) Each flare shall be designed for a net heating value of 8.9 MJ/scm (240 Btu/scf) if a flare is steam-assisted or air-assisted, or a net value of 7.45 MJ/scm (200 Btu/scf) if the flare is non-assisted.

(2) Each flare shall have either a continuously operable pilot flame or an electronic igniter that meets the requirements of paragraphs (b)(3) and (b)(4) of this section.

(3) Each electronic igniter shall meet the following requirements:

(i) Each flare shall be equipped with at least two igniter plugs with redundant igniter transformers;

(ii) The ignition units shall be designed failsafe with respect to flame detection thermocouples (i.e., any flame detection thermocouples are used only to indicate the presence of a flame, are not interlocked with the ignition unit, and cannot deactivate the ignition system); and

(iii) Integral battery backup shall be provided to maintain active ignition operation for a minimum of 15 minutes during a power failure.

(iv) Each electronic igniter shall be operated to initiate ignition when the bleeder valve is not fully closed as indicated by an “OPEN” limit switch.

(4) Each flare installed to meet the requirements of this paragraph (b) that does not have an electronic igniter shall be operated with a pilot flame present at all times as determined by §63.309(h)(2).

(c) Each flare installed to meet the requirements of this section shall be operated with no visible emissions, as determined by the methods specified in §63.309(h)(1), except for periods not to exceed a total of 5 minutes during any 2 consecutive hours.

(d) As an alternative to the installation, operation, and maintenance of a flare system as required in paragraph (a) of this section, the owner or operator may petition the Administrator for approval of an alternative control device or system that achieves at least 98 percent destruction or control of coke oven emissions vented to the alternative control device or system.

(e) The owner or operator of a by-product coke oven battery is exempt from the requirements of this section if the owner or operator:

(1) Submits to the Administrator, no later than November 10, 1993, a formal commitment to close the battery permanently; and

(2) Closes the battery permanently no later than December 31, 1995. In no case may the owner or operator continue to operate a battery for which a closure commitment is submitted, past December 31, 1995.

(f) Any emissions resulting from the installation of flares (or other pollution control devices or systems approved pursuant to paragraph (d) of this section) shall not be used in making new source review determinations under part C and part D of title I of the Act.

§63.308 Standards for collecting mains.

(a) On and after November 15, 1993, the owner or operator of a by-product coke oven battery shall inspect the collecting main for leaks at least once daily according to the procedures in Method 303 in appendix A to this part.

(b) The owner or operator shall record the time and date a leak is first observed, the time and date the leak is temporarily sealed, and the time and date of repair.

(c) The owner or operator shall temporarily seal any leak in the collecting main as soon as possible after detection, but no later than 4 hours after detection of the leak.

(d) The owner or operator shall initiate a collecting main repair as expeditiously as possible, but no later than 5 calendar days after initial detection of the leak. The repair shall be completed within 15 calendar days after initial detection of the leak unless an alternative schedule is approved by the Administrator.

§63.309 Performance tests and procedures.

(a) Except as otherwise provided, a daily performance test shall be conducted each day, 7 days per week for each new and existing coke oven battery, the results of which shall be used in accordance with procedures specified in this subpart to determine compliance with each of the applicable visible emission limitations for coke oven doors, topside port lids, offtake systems, and charging operations in this subpart. If a facility pushes and charges only at night, then that facility must, at its option, change their schedule and charge during daylight hours or provide adequate lighting so that visible emission inspections can be made at night. “Adequate lighting” will be determined by the enforcement agency.

(1) Each performance test is to be conducted according to the procedures and requirements in this section and in Method 303 or 303A in appendix A to this part or Methods 9 and 22 in appendix A to part 60 of this chapter (where applicable).

(2) Each performance test is to be conducted by a certified observer.

(3) The certified observer shall complete any reasonable safety training program offered by the owner or operator prior to conducting any performance test at a coke oven battery.

(4) Except as otherwise provided in paragraph (a)(5) of this section, the owner or operator shall pay an inspection fee to the enforcement agency each calendar quarter to defray the costs of the daily performance tests required under paragraph (a) of this section.

(i) The inspection fee shall be determined according to the following formula:

$$F = H \times S \qquad (Eq.\ 3)$$

where

F=Fees to be paid by owner or operator.

H=Total person hours for inspections: 4 hours for 1 coke oven battery, 6.25 hours for 2 coke oven batteries, 8.25 hours for 3 coke oven batteries. For more than 3 coke oven batteries, use these hours to calculate the appropriate estimate of person hours.

S=Current average hourly rate for private visible emission inspectors in the relevant market.

(ii) The enforcement agency may revise the value for H in equation 3 within 3 years after October 27, 1993 to reflect the amount of time actually required to conduct the inspections required under paragraph (a) of this section.

(iii) The owner or operator shall not be required to pay an inspection fee (or any part thereof) under paragraph (a)(4) of this section, for any monitoring or inspection services required by paragraph (a) of this section that the owner or operator can demonstrate are covered by other fees collected by the enforcement agency.

(iv) Upon request, the enforcement agency shall provide the owner or operator information concerning the inspection services covered by any other fees collected by the enforcement agency, and any information relied upon under paragraph (a)(4)(ii) of this section.

(5)(i) The EPA shall be the enforcement agency during any period of time that a delegation of enforcement authority is not in effect or a withdrawal of enforcement authority under §63.313 is in effect, and the Administrator is responsible for performing the inspections required by this section, pursuant to §63.313(c).

(ii) Within thirty (30) days of receiving notification from the Administrator that the EPA is the enforcement agency for a coke oven battery, the owner or operator shall enter into a contract providing for the inspections and performance tests required under this section to be performed by a Method 303 certified observer. The inspections and performance tests will be conducted at the expense of the owner or operator, during the period that the EPA is the implementing agency.

(b) The enforcement agency shall commence daily performance tests on the applicable date specified in §63.300 (a) or (c).

(c) The certified observer shall conduct each performance test according to the requirements in this paragraph:

(1) The certified observer shall conduct one run each day to observe and record visible emissions from each coke oven door (except for doors covered by an alternative standard under §63.305), topside port lid, and offtake system on each coke oven battery. The certified observer also shall conduct five runs to observe and record the seconds of visible emissions per charge for five consecutive charges from each coke oven battery. The observer may perform additional runs as needed to obtain and record a visible emissions value (or set of values) for an emission point that is valid under Method 303 or Method 303A in appendix A to this part. Observations from fewer than five consecutive charges shall constitute a valid set of charging observations only in accordance with the procedures and conditions specified in sections 3.8 and 3.9 of Method 303 in appendix A to this part.

(2) If a valid visible emissions value (or set of values) is not obtained for a performance test, there is no compliance determination for that day. Compliance determinations will resume on the next day that a valid visible emissions value (or set of values) is obtained.

(3) After each performance test for a by-product coke oven battery, the certified observer shall check and record the collecting main pressure according to the procedures in section 6.3 of Method 303 in appendix A to this part.

(i) The owner or operator shall demonstrate pursuant to Method 303 in appendix A to this part the accuracy of the pressure measurement device upon request of the certified observer;

(ii) The owner or operator shall not adjust the pressure to a level below the range of normal operation during or prior to the inspection;

(4) The certified observer shall monitor visible emissions from coke oven doors subject to an alternative standard under §63.305 on the schedule specified in §63.305(f).

(5) If applicable, the certified observer shall monitor the opacity of any emissions escaping the control device for a shed covering doors subject to an alternative standard under §63.305 on the schedule specified in §63.305(f).

(6) In no case shall the owner or operator knowingly block a coke oven door, or any portion of a door for the purpose of concealing emissions or preventing observations by the certified observer.

(d) Using the observations obtained from each performance test, the enforcement agency shall compute and record, in accordance with the procedures and requirements of Method 303 or 303A in appendix A to this part, for each day of operations on which a valid emissions value (or set of values) is obtained:

(1) The 30-run rolling average of the percent leaking coke oven doors, topside port lids, and offtake systems on each coke oven battery, using the equations in sections 4.5.3.2, 5.6.5.2, and 5.6.6.2 of Method 303 (or section 3.4.3.2 of Method 303A) in appendix A to this part;

(2) For by-product coke oven battery charging operations, the logarithmic 30-day rolling average of the seconds of visible emissions per charge for each battery, using the equation in section 3.9 of Method 303 in appendix A to this part;

(3) For a battery subject to an alternative emission limitation for coke oven doors on by-product coke oven batteries pursuant to §63.305, the 30-run rolling average of the percent leaking coke oven doors for any side of the battery not subject to such alternative emission limitation;

(4) For a by-product coke oven battery subject to the small battery emission limitation for coke oven doors pursuant to §63.304(b)(7), the 30-run rolling average of the number of leaking coke oven doors;

(5) For an approved alternative emission limitation for coke oven doors according to §63.305, the weekly or monthly observation of the percent leaking coke oven doors using Method 303 in appendix A to this part, the percent opacity of visible emissions from the control device for the shed using Method 9 in appendix A to part 60 of this chapter, and visible emissions from the shed using Method 22 in appendix A to part 60 of this chapter;

(e) The certified observer shall make available to the implementing agency as well as to the owner or operator, a copy of the daily inspection results by the end of the day and shall make available the calculated rolling average for each emission point to the owner or operator as soon as practicable following each performance test. The information provided by the certified observer is not a compliance determination. For the purpose of notifying an owner or operator of the results obtained by a certified observer, the person does not have to be certified.

(f) Compliance shall not be determined more often than the schedule provided for performance tests under this section. If additional valid emissions observations are obtained (or in the case of charging, valid sets of emission observations), the arithmetic average of all valid values (or valid sets of values) obtained during the day shall be used in any computations performed to determine compliance under paragraph (d) of this section or determinations under §63.306.

(g) Compliance with the alternative standards for nonrecovery coke oven batteries in §63.303; shed inspection, maintenance requirements, and monitoring requirements for parameters affecting the shed exhaust flow rate for batteries subject to alternative standards for coke oven doors under §63.305; work practice emission control plan requirements in §63.306; standards for bypass/bleeder stacks in §63.307; and standards for collecting mains in §63.308 is to be determined by the enforcement agency based on review of records and inspections.

(h) For a flare installed to meet the requirements of §63.307(b):

(1) Compliance with the provisions in §63.307(c) (visible emissions from flares) shall be determined using Method 22 in appendix A to part 60 of this chapter, with an observation period of 2 hours; and

(2) Compliance with the provisions in §63.307(b)(4) (flare pilot light) shall be determined using a thermocouple or any other equivalent device.

(i) No observations obtained during any program for training or for certifying observers under this subpart shall be used to determine compliance with the requirements of this subpart or any other federally enforceable standard.

(j) The owner or operator of a new nonrecovery coke oven battery shall conduct a performance test once each week to demonstrate compliance with the opacity limit in §63.303(d)(1). The owner or operator shall conduct each performance test according to the procedures and requirements in paragraphs (j)(1) through (3) of this section.

(1) Using a certified observer, determine the average opacity of five consecutive charges per week for each charging emissions capture system if charges can be observed according to the requirements of Method 9 (40 CFR part 60, appendix A), except as specified in paragraphs (j)(1)(i) and (ii) of this section.

(i) Instead of the procedures in section 2.4 of Method 9 (40 CFR part 60, appendix A), record observations to the nearest 5 percent at 15-second intervals for at least five consecutive charges.

(ii) Instead of the procedures in section 2.5 of Method 9 (40 CFR part 60, appendix A), determine and record the highest 3-minute average opacity for each charge from the consecutive observations recorded at 15-second intervals.

(2) Opacity observations are to start when the door is removed for charging and end when the door is replaced.

(3) Using the observations recorded from each performance test, the certified observer shall compute and record the average of the highest 3-minute averages for five consecutive charges.

(k) The owner or operator of a new nonrecovery coke oven battery shall conduct a performance test to demonstrate initial compliance with the emission limitations for a charging emissions control device in §63.303(d)(2) within 180 days of the compliance date that is specified for the affected source in §63.300(a)(4) and report the results in the notification of compliance status. The owner or operator shall prepare a site-specific test plan according to the requirements in §63.7(c) and shall conduct each performance test according to the requirements in §63.7(e)(1) and paragraphs (k)(1) through (4) of this section.

(1) Determine the concentration of PM according to the following test methods in appendix A to 40 CFR part 60.

(i) Method 1 to select sampling port locations and the number of traverse points. Sampling sites must be located at the outlet of the control device and prior to any releases to the atmosphere.

(ii) Method 2, 2F, or 2G to determine the volumetric flow rate of the stack gas.

(iii) Method 3, 3A, or 3B to determine the dry molecular weight of the stack gas. You may also use as an alternative to Method 3B, the manual method for measuring the oxygen, carbon dioxide, and carbon monoxide content of exhaust gas, ANSI/ASME PTC 19.10-1981, “Flue and Exhaust Gas Analyses” (incorporated by reference, see §63.14).

(iv) Method 4 to determine the moisture content of the stack gas.

(v) Method 5 or 5D, as applicable, to determine the concentration of front half PM in the stack gas.

(2) During each PM test run, sample only during periods of actual charging when the capture system fan and control device are engaged. Collect a minimum sample volume of 30 dry standard cubic feet (dscf) during each test run. Three valid test runs are needed to comprise a performance test. Each run must start at the beginning of a charge and finish at the end of a charge (i.e., sample for an integral number of charges).

(3) Determine and record the total combined weight of tons of dry coal charged during the duration of each test run.

(4) Compute the process-weighted mass emissions (E_p) for each test run using Equation 1 of this section as follows:

$$E_p = \frac{C \times Q \times T}{P \times K} \quad \text{(Eq. 1)}$$

Where:

E_p = Process weighted mass emissions of PM, lb/ton;

C = Concentration of PM, grains per dry standard cubic foot (gr/dscf);

Q = Volumetric flow rate of stack gas, dscf/hr;

T = Total time during a run that a sample is withdrawn from the stack during charging, hr;

P = Total amount of dry coal charged during the test run, tons; and

K = Conversion factor, 7,000 grains per pound (gr/lb).

(l) The owner or operator of a new nonrecovery coke oven battery shall conduct subsequent performance tests for each charging emissions control device subject to the PM emissions limit in §63.303(d)(2) at least once during each term of their title V operating permit.

(m) Visible emission observations of a charging emissions control device required by §63.303(d)(3)(iii) must be performed by a certified observer according to Method 9 (40 CFR part 60, appendix A) for one 6-minute period.

[58 FR 57911, Oct. 27, 1993, as amended at 68 FR 37345, June 23, 2003; 70 FR 20013, Apr. 15, 2005]

§63.310 Requirements for startups, shutdowns, and malfunctions.

(a) At all times including periods of startup, shutdown, and malfunction, the owner or operator shall operate and maintain the coke oven battery and its pollution control equipment required under this subpart, in a manner consistent with good air pollution control practices for minimizing emissions to the levels required by any applicable performance standards under this subpart. Failure to adhere to the requirement of this paragraph shall not constitute a separate violation if a violation of an applicable performance or work practice standard has also occurred.

(b) Each owner or operator of a coke oven battery shall develop, according to paragraph (c) of this section, a written startup, shutdown, and malfunction plan that describes procedures for operating the battery, including associated air pollution control equipment, during a period of a startup, shutdown, or malfunction in a manner consistent with good air pollution control practices for minimizing emissions, and procedures for correcting malfunctioning process and air pollution control equipment as quickly as practicable.

(c) Malfunctions shall be corrected as soon as practicable after their occurrence.

(d) In order for the provisions of paragraph (i) of this section to apply with respect to the observation (or set of observations) for a particular day, notification of a startup, shutdown, or a malfunction shall be made by the owner or operator:

(1) If practicable, to the certified observer if the observer is at the facility during the occurrence; or

(2) To the enforcement agency, in writing, within 24 hours of the occurrence first being documented by a company employee, and if the notification under paragraph (d)(1) of this section was not made, an explanation of why no such notification was made.

(e) Within 14 days of the notification made under paragraph (d) of this section, or after a startup or shutdown, the owner or operator shall submit a written report to the applicable permitting authority that:

(1) Describes the time and circumstances of the startup, shutdown, or malfunction; and

(2) Describes actions taken that might be considered inconsistent with the startup, shutdown, or malfunction plan.

(f) The owner or operator shall maintain a record of internal reports which form the basis of each malfunction notification under paragraph (d) of this section.

(g) To satisfy the requirements of this section to develop a startup, shutdown, and malfunction plan, the owner or operator may use the standard operating procedures manual for the battery, provided the manual meets all the requirements for this section and is made available for inspection at reasonable times when requested by the Administrator.

(h) The Administrator may require reasonable revisions to a startup, shutdown, and malfunction plan, if the Administrator finds that the plan:

(1) Does not address a startup, shutdown, or malfunction event that has occurred;

(2) Fails to provide for the operation of the source (including associated air pollution control equipment) during a startup, shutdown, or malfunction event in a manner consistent with good air pollution control practices for minimizing emissions; or

(3) Does not provide adequate procedures for correcting malfunctioning process and/or air pollution control equipment as quickly as practicable.

(i) If the owner or operator demonstrates to the satisfaction of the Administrator that a startup, shutdown, or malfunction has occurred, then an observation occurring during such startup, shutdown, or malfunction shall not:

(1) Constitute a violation of relevant requirements of this subpart;

(2) Be used in any compliance determination under §63.309; or

(3) Be considered for purposes of §63.306, until the Administrator has resolved the claim that a startup, shutdown, or malfunction has occurred. If the Administrator determines that a startup, shutdown, or malfunction has not occurred, such observations may be used for purposes of §63.306, regardless of whether the owner or operator further contests such determination. The owner's or operator's receipt of written notification from the Administrator that a startup, shutdown, or malfunction has not occurred will serve, where applicable under §63.306, as written notification from the certified observer that an exceedance has occurred.

(j) The owner or operator of a nonrecovery coke oven battery subject to the work practice standards for door leaks in §63.303(c) shall include the information specified in paragraphs (j)(1) and (2) of this section in the startup, shutdown, and malfunction plan.

(1) Identification of potential malfunctions that will cause a door to leak, preventative maintenance procedures to minimize their occurrence, and corrective action procedures to stop the door leak.

(2) Identification of potential malfunctions that affect charging emissions, preventative maintenance procedures to minimize their occurrence, and corrective action procedures.

[58 FR 57911, Oct. 27, 1993, as amended at 70 FR 20014, Apr. 15, 2005; 71 FR 20456, Apr. 20, 2006]

§63.311 Reporting and recordkeeping requirements.

(a) After the effective date of an approved permit in a State under part 70 of this chapter, the owner or operator shall submit all notifications and reports required by this subpart to the State permitting authority. Use of information provided by the certified observer shall be a sufficient basis for notifications required under §70.5(c)(9) of this chapter and the reasonable inquiry requirement of §70.5(d) of this chapter.

(b) *Initial compliance certification.* The owner or operator of an existing or new coke oven battery shall provide a written statement(s) to certify compliance to the Administrator within 45 days of the applicable compliance date for the emission limitations or requirements in this subpart. The owner or operator shall include the following information in the initial compliance certification:

(1) Statement signed by the owner or operator, certifying that a bypass/bleeder stack flare system or an approved alternative control device or system has been installed as required in §63.307.

(2) Statement, signed by the owner or operator, certifying that a written startup, shutdown, and malfunction plan has been prepared as required in §63.310.

(3) Statement, signed by the owner or operator, certifying that all work practice standards for charging operations have been met as required in §63.303(b)(3).

(4) Statement, signed by the owner or operator, certifying that all work practice standards for door leaks have been met as required in §63.303(c).

(5) Statement, signed by the owner or operator, certifying that the information on potential malfunctions has been added to the startup, shutdown and malfunction plan as required in §63.310(j).

(6) Statement, signed by the owner or operator, that all applicable emission limitations in §63.303(d)(1) and (2) for a new nonrecovery coke oven battery have been met. The owner or operator shall also include the results of the PM performance test required in §63.309(k).

(7) Statement, signed by the owner or operator, certifying that all work practice standards in §63.303(d)(3) and (4) for a new nonrecovery coke oven battery have been met.

(c) *Notifications.* The owner or operator shall provide written notification(s) to the Administrator of:

(1) Intention to construct a new coke oven battery (including reconstruction of an existing coke oven battery and construction of a greenfield coke oven battery), a brownfield coke oven battery, or a padup rebuild coke oven battery, including the anticipated date of startup.

(2) Election to meet emission limitation(s) in this subpart as follows:

(i) Notification of election to meet the emission limitations in §63.304(b)(1) or §63.304(c) either in lieu of or in addition to the applicable emission limitations in §63.302(a) or §63.303(a) must be received by the Administrator on or before November 15, 1993; or

(ii) Notification of election to meet the emission limitations in §63.302(a)(1) or §63.303(a), as applicable, must be received by the Administrator on or before December 31, 1995; and

(iii) Notification of election to meet the emission limitations in §63.304(b) (2) through (4) and §63.304(c) or election to meet residual risk standards to be developed according to section 112(f) of the Act in lieu of the emission standards in §63.304 must be received on or before January 1, 1998.

(3) Intention to conduct a PM performance test for a new nonrecovery coke oven battery subject to the requirements in §63.303(d)(2). The owner or operator shall provide written notification according to the requirements in §63.7(b).

(d) *Semiannual compliance certification.* The owner or operator of a coke oven battery shall include the following information in the semiannual compliance certification:

(1) Certification, signed by the owner or operator, that no coke oven gas was vented, except through the bypass/bleeder stack flare system of a by-product coke oven battery during the reporting period or that a venting report has been submitted according to the requirements in paragraph (e) of this section.

(2) Certification, signed by the owner or operator, that a startup, shutdown, or malfunction event did not occur for a coke oven battery during the reporting period or that a startup, shutdown, and malfunction event did occur and a report was submitted according to the requirements in §63.310(e).

(3) Certification, signed by the owner or operator, that work practices were implemented if applicable under §63.306.

(4) Certification, signed by the owner or operator, that all work practices for nonrecovery coke oven batteries were implemented as required in §63.303(b)(3).

(5) Certification, signed by the owner or operator, that all coke oven door leaks on a nonrecovery battery were stopped according to the requirements in §63.303(c)(2) and (3). If a coke oven door leak was not stopped according to the requirements in §63.303(c)(2) and (3), or if the door leak occurred again during the coking cycle, the owner or operator must report the information in paragraphs (d)(5)(i) through (iii) of this section.

(i) The oven number of each coke oven door for which a leak was not stopped according to the requirements in §63.303(c)(2) and (3) or for a door leak that occurred again during the coking cycle.

(ii) The total duration of the leak from the time the leak was first observed.

(iii) The cause of the leak (including unknown cause, if applicable) and the corrective action taken to stop the leak.

(6) Certification, signed by the owner or operator, that the opacity of emissions from charging operations for a new nonrecovery coke oven battery did not exceed 20 percent. If the opacity limit in §63.303(d)(1) was exceeded, the

owner or operator must report the number, duration, and cause of the deviation (including unknown cause, if applicable), and the corrective action taken.

(7) Results of any PM performance test for a charging emissions control device for a new nonrecovery coke oven battery conducted during the reporting period as required in §63.309(l).

(8) Certification, signed by the owner or operator, that all work practices for a charging emissions control device for a new nonrecovery coke oven battery were implemented as required in §63.303(d)(3). If a Method 9 (40 CFR part 60, appendix A) visible emissions observation exceeds 10 percent, the owner or operator must report the duration and cause of the deviation (including unknown cause, if applicable), and the corrective action taken.

(9) Certification, signed by the owner or operator, that all work practices for oven dampers on a new nonrecovery coke oven battery were implemented as required in §63.303(d)(4).

(e) *Report for the venting of coke oven gas other than through a flare system.* The owner or operator shall report any venting of coke oven gas through a bypass/bleeder stack that was not vented through the bypass/bleeder stack flare system to the Administrator as soon as practicable but no later than 24 hours after the beginning of the event. A written report shall be submitted within 30 days of the event and shall include a description of the event and, if applicable, a copy of the notification for a hazardous substance release required pursuant to §302.6 of this chapter.

(f) *Recordkeeping.* The owner or operator shall maintain files of all required information in a permanent form suitable for inspection at an onsite location for at least 1 year and must thereafter be accessible within 3 working days to the Administrator for the time period specified in §70.6(a)(3)(ii)(B) of this chapter. Copies of the work practice plan developed under §63.306 and the startup, shutdown, and malfunction plan developed under §63.310 shall be kept onsite at all times. The owner or operator shall maintain the following information:

(1) For nonrecovery coke oven batteries,

(i) Records of daily pressure monitoring, if applicable according to §63.303(a)(1)(ii) or §63.303(b)(1)(ii).

(ii) Records demonstrating the performance of work practice requirements according to §63.306(b)(7). This requirement applies to nonrecovery coke oven batteries subject to the work practice requirements in §63.303(a)(2) or §63.303(b)(3).

(iii) Design characteristics of each emission control system for the capture and collection of charging emissions, as required by §63.303(b)(2).

(iv) Records to demonstrate compliance with the work practice requirement for door leaks in §63.303(c). These records must include the oven number of each leaking door, total duration of the leak from the time the leak was first observed, the cause of the leak (including unknown cause, if applicable), the corrective action taken, and the amount of time taken to stop the leak from the time the leak was first observed.

(v) Records to demonstrate compliance with the work practice requirements for oven uptake damper monitoring and adjustments in §63.303(c)(1)(iv).

(vi) Records of weekly performance tests to demonstrate compliance with the opacity limit for charging operations in §63.303(d)(1). These records must include calculations of the highest 3-minute averages for each charge, the average opacity of five charges, and, if applicable, records demonstrating why five consecutive charges were not observed (e.g., the battery was charged only at night).

(vii) Records of all PM performance tests for a charging emissions control device to demonstrate compliance with the limit in §63.303(d)(2).

(viii) Records of all daily visible emission observations for a charging emission control device to demonstrate compliance with the requirements limit in §63.303(d)(3).

(ix) Records to demonstrate compliance with the work practice requirements for oven uptake damper monitoring and adjustments in §63.303(d)(4).

(2) For an approved alternative emission limitation according to §63.305;

(i) Monitoring records for parameter(s) that indicate the exhaust flow rate is maintained;

(ii) If applicable under §63.305(f)(4)(i);

(A) Records of opacity readings from the continuous opacity monitor for the control device for the shed; and

(B) Records that demonstrate the continuous opacity monitoring system meets the requirements of Performance Specification 1 in appendix B to part 60 of this chapter and the operation and maintenance requirements in part 52 of this chapter; and

(iii) Records of quarterly visual inspections as specified in §63.305(f)(5), including the time and date a defect is detected and repaired.

(3) A copy of the work practice plan required by §63.306 and any revision to the plan;

(4) If the owner or operator is required under §63.306(c) to implement the provisions of a work practice plan for a particular emission point, the following records regarding the implementation of plan requirements for that emission point during the implementation period;

(i) Copies of all written and audiovisual materials used in the training, the dates of each class, the names of the participants in each class, and documentation that all appropriate personnel have successfully completed the training required under §63.306(b)(1);

(ii) The records required to be maintained by the plan provisions implementing §63.306(b)(7);

(iii) Records resulting from audits of the effectiveness of the work practice program for the particular emission point, as required under §63.306(b)(2)(i), 63.306(b)(3)(i), 63.306(b)(4)(i), or 63.306(b)(5)(i); and

(iv) If the plan provisions for coke oven doors must be implemented, records of the inventory of doors and jambs as required under §63.306(b)(2)(vi); and

(5) The design drawings and engineering specifications for the bypass/bleeder stack flare system or approved alternative control device or system as required under §63.307.

(6) Records specified in §63.310(f) regarding the basis of each malfunction notification.

(g) Records required to be maintained and reports required to be filed with the Administrator under this subpart shall be made available in accordance with the requirements of this paragraph by the owner or operator to the authorized collective bargaining representative of the employees at a coke oven battery, for inspection and copying.

(1) Requests under paragraph (g) of this section shall be submitted in writing, and shall identify the records or reports that are subject to the request with reasonable specificity;

(2) The owner or operator shall produce the reports for inspection and copying within a reasonable period of time, not to exceed 30 days. A reasonable fee may be charged for copying (except for the first copy of any document), which shall not exceed the copying fee charged by the Administrator under part 2 of this chapter;

(3) Nothing in paragraph (g) of this section shall require the production for inspection or copying of any portion of a document that contains trade secrets or confidential business information that the Administrator would be prohibited from disclosing to the public under part 2 of this chapter; and

(4) The inspection or copying of a document under paragraph (g) of this section shall not in any way affect any property right of the owner or operator in such document under laws for the protection of intellectual property, including the copyright laws.

[58 FR 57911, Oct. 27, 1993, as amended at 70 FR 20014, Apr. 15, 2005]

§63.312 Existing regulations and requirements.

(a) The owner or operator shall comply with all applicable State implementation plan emission limits and (subject to any expiration date) all federally enforceable emission limitations which are contained in an order, decree, permit, or settlement agreement for the control of emissions from offtake systems, topside port lids, coke oven doors, and charging operations in effect on September 15, 1992, or which have been modified according to the provisions of paragraph (c) of this section.

(b) Nothing in this subpart shall affect the enforcement of such State implementation plan emission limitations (or, subject to any expiration date, such federally enforceable emission limitations contained in an order, decree, permit, or settlement agreement) in effect on September 15, 1992, or which have been modified according to the provisions in paragraph (c) of this section.

(c) No such State implementation plan emission limitation (or, subject to any expiration date, such federally enforceable emission limitation contained in an order, decree, permit, or settlement agreement) in effect on September 15, 1992, may be modified under the Act unless:

(1) Such modification is consistent with all requirements of section 110 of the Act; and either

(i) Such modification ensures that the applicable emission limitations and format (e.g., single pass v. multiday average) in effect on September 15, 1992, will continue in effect; or

(ii) Such modification includes a change in the method of monitoring (except frequency unless frequency was indicated in the State implementation plan, or subject to any expiration date, other federally enforceable requirements contained in an order, decree, permit, or settlement agreement) that is more stringent than the method of monitoring in effect on September 15, 1992, and that ensures coke oven emission reductions greater than the emission reductions required on September 15, 1992. The burden of proof in demonstrating the stringency of the methods of monitoring is borne by the party requesting the modification and must be made to the satisfaction of the Administrator; or

(iii) Such modification makes the emission limitations more stringent while holding the format unchanged, makes the format more stringent while holding the emission limitations unchanged, or makes both more stringent.

(2) Any industry application to make a State implementation plan revision or other adjustment to account for differences between Method 303 in appendix A to this part and the State's method based on paragraph (c)(1)(ii) of this section shall be submitted within 12 months after October 27, 1993.

(d) Except as specified in §63.307(f), nothing in this subpart shall limit or affect any authority or obligation of Federal, State, or local agencies to establish emission limitations or other requirements more stringent than those specified in this subpart.

(e) Except as provided in §63.302(c), section 112(g) of the Act shall not apply to sources subject to this subpart.

§63.313 Implementation and enforcement.

(a) This subpart can be implemented and enforced by the U.S. EPA, or a delegated authority such as the applicable State, local, or Tribal agency. If the U.S. EPA Administrator has delegated authority to a State, local, or Tribal agency, then that agency, in addition to the U.S. EPA, has the authority to implement and enforce this subpart. Contact the applicable U.S. EPA Regional Office to find out if implementation and enforcement of this subpart is delegated to a State, local, or Tribal agency.

(b) In delegating implementation and enforcement authority of this subpart to a State, local, or Tribal agency under subpart E of this part, the authorities contained in paragraph (d) of this section are retained by the Administrator and cannot be transferred to the State, local, or Tribal agency.

(c) Withdrawal of authority:

(1) Whenever the Administrator learns that a delegated agency has not fully carried out the inspections and performance tests required under §63.309 for each applicable emission point of each battery each day, the Administrator shall immediately notify the agency. Unless the delegated agency demonstrates to the Administrator's satisfaction within 15 days of notification that the agency is consistently carrying out the inspections and performance tests required under §63.309 in the manner specified in the preceding sentence, the Administrator shall notify the coke oven battery owner or operator that inspections and performance tests shall be carried out according to §63.309(a)(5). When the Administrator determines that the delegated agency is prepared to consistently perform all the required inspections and performance tests each day, the Administrator shall give the coke oven battery owner or operator at least 15 days notice that implementation will revert to the previously delegated agency.

(2) In addition to the provisions in paragraph (c)(1) of this section, the Administrator may also withdraw delegation of authority pursuant to the provisions of §63.96 of subpart E of this part.

(d) The authorities that cannot be delegated to State, local, or Tribal agencies are as specified in paragraphs (d)(1) through (5) of this section.

(1) Approval of alternatives to the requirements in §§63.300 and 63.302 through 63.308 (except the authorities in 63.306(a)(2) and (d)).

(2) Approval of major alternatives to test methods under §63.7(e)(2)(ii) and (f), as defined in §63.90, and as required in this subpart.

(3) Approval of any changes to section 2 of Method 303 in appendix A of this part.

(4) Approval of major alternatives to monitoring under §63.8(f), as defined in §63.90, and as required in this subpart.

(5) Approval of major alternatives to recordkeeping and reporting under §63.10(f), as defined in §63.90, and as required in this subpart.

[68 FR 37346, June 23, 2003]

Appendix A to Subpart L of Part 63—Operating Coke Oven Batteries as of April 1, 1992

No.	Plant	Battery
1	ABC Coke, Tarrant, AL	A
		5
		6
2	Acme Steel, Chicago, IL	1
		2
3	Armco, Inc., Middletown, OH	1
		2
		3
4	Armco, Inc., Ashland, KY	3
		4
5	Bethlehem Steel, Bethlehem, PA	A
		2
		3

No.	Plant	Battery
6	Bethlehem Steel, Burns Harbor, IN	1
		2
7	Bethlehem Steel, Lackawanna, NY	7
		8
8	Citizens Gas, Indianapolis, IN	E
		H
		1
9	Empire Coke, Holt, AL	1
		2
10	Erie Coke, Erie, PA	A
		B
11	Geneva Steel, Provo, UT	1
		2
		3
		4
12	Gulf States Steel, Gadsden, AL	2
		3
13	Inland Steel, East Chicago, IN	6
		7
		9
		10
		11
14	Jewell Coal and Coke, Vansant, VA	2
		3A
		3B
		3C
15	Koppers, Woodward, AL	1
		2A
		2B
		4A
		4B
		5
16	LTV Steel, Cleveland, OH	6
		7
17	LTV Steel, Pittsburgh, PA	P1
		P2
		P3N
		P3S
		P4
18	LTV Steel, Chicago, IL	2
19	LTV Steel, Warren, OH	4
20	National Steel, Ecorse, MI	5
21	National Steel, Granite City, IL	A
		B

No.	Plant	Battery
22	New Boston Coke, Portsmouth, OH	1
23	Sharon Steel, Monessen, PA	1B
		2
24	Shenango, Pittsburgh, PA	1
		4
25	Sloss Industries, Birmingham, AL	3
		4
		5
26	Toledo Coke, Toledo, OH	C
27	Tonawanda Coke, Buffalo, NY	1
28	USX, Clairton, PA	1
		2
		3
		7
		8
		9
		13
		14
		15
		19
		20
		B
29	USX, Gary, IN	2
		3
		5
		7
30	Wheeling-Pittsburgh, E. Steubenville, WV	1 2
		3
		8

[58 FR 57911, Oct. 27, 1993; 59 FR 1992, Jan. 13, 1994]

Attachment I
To Part 70 Operating Permit Renewal No. T089-29907-00121

[Downloaded from the eCFR on November 7, 2013]

Electronic Code of Federal Regulations

Title 40: Protection of Environment

Part 63, Subpart CCCCC—National Emission Standards for Hazardous Air Pollutants for Coke Ovens: Pushing, Quenching, and Battery Stacks

Source: 68 FR 18025, Apr. 14, 2003, unless otherwise noted.

What This Subpart Covers

§63.7280 What is the purpose of this subpart?

This subpart establishes national emission standards for hazardous air pollutants (NESHAP) for pushing, soaking, quenching, and battery stacks at coke oven batteries. This subpart also establishes requirements to demonstrate initial and continuous compliance with all applicable emission limitations, work practice standards, and operation and maintenance requirements in this subpart.

§63.7281 Am I subject to this subpart?

You are subject to this subpart if you own or operate a coke oven battery at a coke plant that is (or is part of) a major source of hazardous air pollutant (HAP) emissions. A major source of HAP is a plant site that emits or has the potential to emit any single HAP at a rate of 10 tons or more per year or any combination of HAP at a rate of 25 tons or more per year.

§63.7282 What parts of my plant does this subpart cover?

(a) This subpart applies to each new or existing affected source at your coke plant. The affected source is each coke oven battery.

(b) This subpart covers emissions from pushing, soaking, quenching, and battery stacks from each affected source.

(c) An affected source at your coke plant is existing if you commenced construction or reconstruction of the affected source before July 3, 2001.

(d) An affected source at your coke plant is new if you commenced construction or reconstruction of the affected source on or after July 3, 2001. An affected source is reconstructed if it meets the definition of “reconstruction” in §63.2.

§63.7283 When do I have to comply with this subpart?

(a) If you have an existing affected source, you must comply with each emission limitation, work practice standard, and operation and maintenance requirement in this subpart that applies to you no later than April 14, 2006.

(b) If you have a new affected source and its initial startup date is on or before April 14, 2003, you must comply with each emission limitation, work practice standard, and operation and maintenance requirement in this subpart that applies to you by April 14, 2003.

(c) If you have a new affected source and its initial startup date is after April 14, 2003, you must comply with each emission limitation, work practice standard, and operation and maintenance requirement in this subpart that applies to you upon initial startup.

(d) You must meet the notification and schedule requirements in §63.7340. Several of these notifications must be submitted before the compliance date for your affected source.

[68 FR 18025, Apr. 14, 2003; 68 FR 19885, Apr. 22, 2003]

Emission Limitations and Work Practice Standards

§63.7290 What emission limitations must I meet for capture systems and control devices applied to pushing emissions?

(a) You must not discharge to the atmosphere emissions of particulate matter from a control device applied to pushing emissions from a new or existing coke oven battery that exceed the applicable limit in paragraphs (a)(1) through (4) of this section:

(1) 0.01 grain per dry standard cubic foot (gr/dscf) if a cokeside shed is used to capture emissions;

(2) 0.02 pound per ton (lb/ton) of coke if a moveable hood vented to a stationary control device is used to capture emissions;

(3) If a mobile scrubber car that does not capture emissions during travel is used:

(i) 0.03 lb/ton of coke for a control device applied to pushing emissions from a short battery, or

(ii) 0.01 lb/ton of coke for a control device applied to pushing emissions from a tall battery; and

(4) 0.04 lb/ton of coke if a mobile control device that captures emissions during travel is used.

(b) You must meet each operating limit in paragraphs (b)(1) through (4) of this section that applies to you for a new or existing coke oven battery.

(1) For each venturi scrubber applied to pushing emissions, you must maintain the daily average pressure drop and scrubber water flow rate at or above the minimum levels established during the initial performance test.

(2) For each hot water scrubber applied to pushing emissions, you must maintain the daily average water pressure and water temperature at or above the minimum levels established during the initial performance test.

(3) For each capture system applied to pushing emissions, you must maintain the daily average volumetric flow rate at the inlet of the control device at or above the minimum level established during the initial performance test; or

(i) For each capture system that uses an electric motor to drive the fan, you must maintain the daily average fan motor amperes at or above the minimum level established during the initial performance test; and

(ii) For each capture system that does not use a fan driven by an electric motor, you must maintain the daily average static pressure at the inlet to the control device at an equal or greater vacuum than the level established during the initial performance test or maintain the daily average fan revolutions per minute (RPM) at or above the minimum level established during the initial performance test.

(4) For each multicyclone, you must maintain the daily average pressure drop at or below the minimum level established during the initial performance test.

[68 FR 18025, Apr. 14, 2003, as amended at 69 FR 60818, Oct. 13, 2004]

§63.7291 What work practice standards must I meet for fugitive pushing emissions if I have a by-product coke oven battery with vertical flues?

(a) You must meet each requirement in paragraphs (a)(1) through (7) of this section for each new or existing by-product coke oven battery with vertical flues.

(1) Observe and record the opacity of fugitive pushing emissions from each oven at least once every 90 days. If an oven cannot be observed during a 90-day period due to circumstances that were not reasonably avoidable, you must observe the opacity of the first push of that oven following the close of the 90-day period that is capable of being observed in accordance with the procedures in §63.7334(a), and you must document why the oven was not observed within a 90-day period. All opacity observations of fugitive pushing emissions for batteries with vertical flues must be made using the procedures in §63.7334(a).

(2) If two or more batteries are served by the same pushing equipment and total no more than 90 ovens, the batteries as a unit can be considered a single battery.

(3) Observe and record the opacity of fugitive pushing emissions for at least four consecutive pushes per battery each day. Exclude any push during which the observer's view is obstructed or obscured by interferences and observe the next available push to complete the set of four pushes. If necessary due to circumstances that were not reasonably avoidable, you may observe fewer than four consecutive pushes in a day; however, you must observe and record as many consecutive pushes as possible and document why four consecutive pushes could not be observed. You may observe and record one or more non-consecutive pushes in addition to any consecutive pushes observed in a day.

(4) Do not alter the pushing schedule to change the sequence of consecutive pushes to be observed on any day. Keep records indicating the legitimate operational reason for any change in your pushing schedule which results in a change in the sequence of consecutive pushes observed on any day.

(5) If the average opacity for any individual push exceeds 30 percent opacity for any short battery or 35 percent opacity for any tall battery, you must take corrective action and/or increase coking time for that oven. You must complete corrective action or increase coking time within either 10 calendar days or the number of days determined using Equation 1 of this section, whichever is greater:

$X = 0.55 * Y$ (Eq. 1)

Where:

X = Number of calendar days allowed to complete corrective action or increase coking time; and

Y = Current coking time for the oven, hours.

For the purpose of determining the number of calendar days allowed under Equation 1 of this section, day one is the first day following the day you observed an opacity in excess of 30 percent for any short battery or 35 percent for any tall battery. Any fraction produced by Equation 1 of this section must be counted as a whole day. Days during which the oven is removed from service are not included in the number of days allowed to complete corrective action.

(6)(i) You must demonstrate that the corrective action and/or increased coking time was successful. After a period of time no longer than the number of days allowed in paragraph (a)(5) of this section, observe and record the opacity of the first two pushes for the oven capable of being observed using the procedures in §63.7334(a). The corrective action and/or increased coking time was successful if the average opacity for each of the two pushes is 30 percent or less for a short battery or 35 percent or less for a tall battery. If the corrective action and/or increased coking time was successful, you may return the oven to the 90-day reading rotation described in paragraph (a)(1) of this section. If the average opacity of either push exceeds 30 percent for a short battery or 35 percent for a tall battery, the corrective action and/or increased coking time was unsuccessful, and you must complete additional corrective action and/or increase coking time for that oven within the number of days allowed in paragraph (a)(5) of this section.

(ii) After implementing any additional corrective action and/or increased coking time required under paragraph (a)(6)(i) or (a)(7)(ii) of this section, you must demonstrate that corrective action and/or increased coking time was

successful. After a period of time no longer than the number of days allowed in paragraph (a)(5) of this section, you must observe and record the opacity of the first two pushes for the oven capable of being observed using the procedures in §63.7334(a). The corrective action and/or increased coking time was successful if the average opacity for each of the two pushes is 30 percent or less for a short battery or 35 percent or less for a tall battery. If the corrective action and/or increased coking time was successful, you may return the oven to the 90-day reading rotation described in paragraph (a)(1) of this section. If the average opacity of either push exceeds 30 percent for a short battery or 35 percent for a tall battery, the corrective action and/or increased coking time was unsuccessful, and you must follow the procedures in paragraph (a)(6)(iii) of this section.

(iii) If the corrective action and/or increased coking time was unsuccessful as described in paragraph (a)(6)(ii) of this section, you must repeat the procedures in paragraph (a)(6)(ii) of this section until the corrective action and/or increased coking time is successful. You must report to the permitting authority as a deviation each unsuccessful attempt at corrective action and/or increased coking time under paragraph (a)(6)(ii) of this section.

(7)(i) If at any time you place an oven on increased coking time as a result of fugitive pushing emissions that exceed 30 percent for a short battery or 35 percent for a tall battery, you must keep the oven on the increased coking time until the oven qualifies for decreased coking time using the procedures in paragraph (a)(7)(ii) or (a)(7)(iii) of this section.

(ii) To qualify for a decreased coking time for an oven placed on increased coking time in accordance with paragraph (a)(5) or (6) of this section, you must operate the oven on the decreased coking time. After no more than two coking cycles on the decreased coking time, you must observe and record the opacity of the first two pushes that are capable of being observed using the procedures in §63.7334(a). If the average opacity for each of the two pushes is 30 percent or less for a short battery or 35 percent or less for a tall battery, you may keep the oven on the decreased coking time and return the oven to the 90-day reading rotation described in paragraph (a)(1) of this section. If the average opacity of either push exceeds 30 percent for a short battery or 35 percent for a tall battery, the attempt to qualify for a decreased coking time was unsuccessful. You must then return the oven to the previously established increased coking time, or implement other corrective action(s) and/or increased coking time. If you implement other corrective action and/or a coking time that is shorter than the previously established increased coking time, you must follow the procedures in paragraph (a)(6)(ii) of this section to confirm that the corrective action(s) and/or increased coking time was successful.

(iii) If the attempt to qualify for decreased coking time was unsuccessful as described in paragraph (a)(7)(ii) of this section, you may again attempt to qualify for decreased coking time for the oven. To do this, you must operate the oven on the decreased coking time. After no more than two coking cycles on the decreased coking time, you must observe and record the opacity of the first two pushes that are capable of being observed using the procedures in §63.7334(a). If the average opacity for each of the two pushes is 30 percent or less for a short battery or 35 percent or less for a tall battery, you may keep the oven on the decreased coking time and return the oven to the 90-day reading rotation described in paragraph (a)(1) of this section. If the average opacity of either push exceeds 30 percent for a short battery or 35 percent for a tall battery, the attempt to qualify for a decreased coking time was unsuccessful. You must then return the oven to the previously established increased coking time, or implement other corrective action(s) and/or increased coking time. If you implement other corrective action and/or a coking time that is shorter than the previously established increased coking time, you must follow the procedures in paragraph (a)(6)(ii) of this section to confirm that the corrective action(s) and/or increased coking time was successful.

(iv) You must report to the permitting authority as a deviation the second and any subsequent consecutive unsuccessful attempts on the same oven to qualify for decreased coking time as described in paragraph (a)(7)(iii) of this section.

(b) As provided in §63.6(g), you may request to use an alternative to the work practice standards in paragraph (a) of this section.

§63.7292 What work practice standards must I meet for fugitive pushing emissions if I have a by-product coke oven battery with horizontal flues?

(a) You must comply with each of the requirements in paragraphs (a)(1) through (4) of this section.

(1) Prepare and operate by a written plan that will eliminate or minimize incomplete coking for each by-product coke oven battery with horizontal flues. You must submit the plan and supporting documentation to the Administrator (or

delegated authority) for approval no later than 90 days after completing all observations and measurements required for the study in paragraph (a)(3) of this section or April 14, 2004, whichever is earlier. You must begin operating by the plan requirements by the compliance date that is specified in §63.7283. The written plan must identify minimum flue temperatures for different coking times and a battery-wide minimum acceptable flue temperature for any oven at any coking time.

(2) Submit the written plan and supporting documentation to the Administrator (or delegated authority) for review and approval. Include all data collected during the study described in paragraph (a)(3) of this section. If the Administrator (or delegated authority) disapproves the plan, you must revise the plan as directed by the Administrator (or delegated authority) and submit the amended plan for approval. The Administrator (or delegated authority) may require you to collect and submit additional data. You must operate according to your submitted plan (or submitted amended plan, if any) until the Administrator (or delegated authority) approves your plan.

(3) You must base your written plan on a study that you conduct that meets each of the requirements listed in paragraphs (a)(3)(i) through (x) of this section.

(i) Initiate the study by July 14, 2003. Notify the Administrator (or delegated authority) at least 7 days prior to initiating the study according to the requirements in §63.7340(f).

(ii) Conduct the study under representative operating conditions, including but not limited to the range of moisture content and volatile matter in the coal that is charged.

(iii) Include every oven in the study and observe at least two pushes from each oven.

(iv) For each push observed, measure and record the temperature of every flue within 2 hours before the scheduled pushing time. Document the oven number, date, and time the oven was charged and pushed, and calculate the net coking time.

(v) For each push observed, document the factors to be used to identify pushes that are incompletely coked. These factors must include (but are not limited to): average opacity during the push, average opacity during travel to the quench tower, average of six highest consecutive observations during both push and travel, highest single opacity reading, color of the emissions (especially noting any yellow or brown emissions), presence of excessive smoke during travel to the quench tower, percent volatile matter in the coke, percent volatile matter and percent moisture in the coal that is charged, and the date the oven was last rebuilt or completely relined. Additional documentation may be provided in the form of pictures or videotape of emissions during the push and travel. All opacity observations must be conducted in accordance with the procedures in §63.7334(a)(3) through (7).

(vi) Inspect the inside walls of the oven after each observed push for cool spots as indicated by a flue that is darker than others (the oven walls should be red hot) and record the results.

(vii) For each push observed, note where incomplete coking occurs if possible (*e.g.,* coke side end, pusher side end, top, or center of the coke mass). For any push with incomplete coking, investigate and document the probable cause.

(viii) Use the documented factors in paragraph (a)(3)(v) of this section to identify pushes that were completely coked and those that were not completely coked. Provide a rationale for the determination based on the documentation of factors observed during the study.

(ix) Use only the flue temperature and coking time data for pushes that were completely coked to identify minimum flue temperatures for various coking times. Submit the criteria used to determine complete coking, as well as a table of coking times and corresponding temperatures for complete coking as part of your plan.

(x) Determine the battery-wide minimum acceptable flue temperature for any oven. This temperature will be equal to the lowest temperature that provided complete coking as determined in paragraph (a)(3)(ix) of this section.

(4) You must operate according to the coking times and temperatures in your approved plan and the requirements in paragraphs (a)(4)(i) through (viii) of this section.

(i) Measure and record the percent volatile matter in the coal that is charged.

(ii) Measure and record the temperature of all flues on two ovens per day within 2 hours before the scheduled pushing time for each oven. Measure and record the temperature of all flues on each oven at least once each month.

(iii) For each oven observed in accordance with paragraph (a)(4)(ii) of this section, record the time each oven is charged and pushed and calculate and record the net coking time. If any measured flue temperature for an oven is below the minimum flue temperature for an oven's scheduled coking time as established in the written plan, increase the coking time for the oven to the coking time in the written plan for the observed flue temperature before pushing the oven.

(iv) If you increased the coking time for any oven in accordance with paragraph (a)(4)(iii) of this section, you must investigate the cause of the low flue temperature and take corrective action to fix the problem. You must continue to measure and record the temperature of all flues for the oven within 2 hours before each scheduled pushing time until the measurements meet the minimum temperature requirements for the increased coking time for two consecutive pushes. If any measured flue temperature for an oven on increased coking time falls below the minimum flue temperature for the increased coking time, as established in the written plan, you must increase the coking time for the oven to the coking time specified in the written plan for the observed flue temperature before pushing the oven. The oven must continue to operate at this coking time (or at a longer coking time if the temperature falls below the minimum allowed for the increased coking time) until the problem has been corrected, and you have confirmed that the corrective action was successful as required by paragraph (a)(4)(v) of this section.

(v) Once the heating problem has been corrected, the oven may be returned to the battery's normal coking schedule. You must then measure and record the flue temperatures for the oven within 2 hours before the scheduled pushing time for the next two consecutive pushes. If any flue temperature measurement is below the minimum flue temperature for that coking time established in the written plan, repeat the procedures in paragraphs (a)(4)(iii) and (iv) of this section.

(vi) If any flue temperature measurement is below the battery-wide minimum acceptable temperature for complete coking established in the written plan for any oven at any coking time, you must remove the oven from service for repairs.

(vii) For an oven that has been repaired and returned to service after being removed from service in accordance with paragraph (a)(4)(vi) of this section, you must measure and record the temperatures of all flues for the oven within 2 hours before the first scheduled pushing time. If any flue temperature measurement is below the minimum flue temperature for the scheduled coking time, as established in the written plan, you must repeat the procedures described in paragraphs (a)(4)(iii) and (iv) of this section.

(viii) For an oven that has been repaired and returned to service after removal from service in accordance with paragraph (a)(4)(vi) of this section, you must report as a deviation to the permitting authority any flue temperature measurement made during the initial coking cycle after return to service that is below the lowest acceptable minimum flue temperature.

(b) As provided in §63.6(g), you may request to use an alternative to the work practice standards in paragraph (a) of this section.

§63.7293 What work practice standards must I meet for fugitive pushing emissions if I have a non-recovery coke oven battery?

(a) You must meet the requirements in paragraphs (a)(1) and (2) of this section for each new and existing non-recovery coke oven battery.

(1) You must visually inspect each oven prior to pushing by opening the door damper and observing the bed of coke.

(2) Do not push the oven unless the visual inspection indicates that there is no smoke in the open space above the coke bed and that there is an unobstructed view of the door on the opposite side of the oven.

(b) As provided in §63.6(g), you may request to use an alternative to the work practice standard in paragraph (a) of this section.

§63.7294 What work practice standard must I meet for soaking?

(a) For each new and existing by-product coke oven battery, you must prepare and operate at all times according to a written work practice plan for soaking. Each plan must include measures and procedures to:

(1) Train topside workers to identify soaking emissions that require corrective actions.

(2) Damper the oven off the collecting main prior to opening the standpipe cap.

(3) Determine the cause of soaking emissions that do not ignite automatically, including emissions that result from raw coke oven gas leaking from the collecting main through the damper, and emissions that result from incomplete coking.

(4) If soaking emissions are caused by leaks from the collecting main, take corrective actions to eliminate the soaking emissions. Corrective actions may include, but are not limited to, reseating the damper, cleaning the flushing liquor piping, using aspiration, putting the oven back on the collecting main, or igniting the emissions.

(5) If soaking emissions are not caused by leaks from the collecting main, notify a designated responsible party. The responsible party must determine whether the soaking emissions are due to incomplete coking. If incomplete coking is the cause of the soaking emissions, you must put the oven back on the collecting main until it is completely coked or you must ignite the emissions.

(b) As provided in §63.6(g), you may request to use an alternative to the work practice standard in paragraph (a) of this section.

§63.7295 What requirements must I meet for quenching?

(a) You must meet the requirements in paragraphs (a)(1) and (2) of this section for each quench tower and backup quench station at a new or existing coke oven battery.

(1) For the quenching of hot coke, you must meet the requirements in paragraph (a)(1)(i) or (ii) of this section.

(i) The concentration of total dissolved solids (TDS) in the water used for quenching must not exceed 1,100 milligrams per liter (mg/L); or

(ii) The sum of the concentrations of benzene, benzo(a)pyrene, and naphthalene in the water used for quenching must not exceed the applicable site-specific limit approved by the permitting authority.

(2) You must use acceptable makeup water, as defined in §63.7352, as makeup water for quenching.

(b) For each quench tower at a new or existing coke oven battery and each backup quench station at a new coke oven battery, you must meet each of the requirements in paragraphs (b)(1) through (4) of this section.

(1) You must equip each quench tower with baffles such that no more than 5 percent of the cross sectional area of the tower may be uncovered or open to the sky.

(2) You must wash the baffles in each quench tower once each day that the tower is used to quench coke, except as specified in paragraphs (b)(2)(i) and (ii) of this section.

(i) You are not required to wash the baffles in a quench tower if the highest measured ambient temperature remains less than 30 degrees Fahrenheit throughout that day (24-hour period). If the measured ambient temperature rises to 30 degrees Fahrenheit or more during the day, you must resume daily washing according to the schedule in your operation and maintenance plan.

(ii) You must continuously record the ambient temperature on days that the baffles were not washed.

(3) You must inspect each quench tower monthly for damaged or missing baffles and blockage.

(4) You must initiate repair or replacement of damaged or missing baffles within 30 days and complete as soon as practicable.

(c) As provided in §63.6(g), you may request to use an alternative to the work practice standards in paragraph (b) of this section.

§63.7296 What emission limitations must I meet for battery stacks?

You must not discharge to the atmosphere any emissions from any battery stack at a new or existing by-product coke oven battery that exhibit an opacity greater than the applicable limit in paragraphs (a) and (b) of this section.

(a) Daily average of 15 percent opacity for a battery on a normal coking cycle.

(b) Daily average of 20 percent opacity for a battery on batterywide extended coking.

Operation and Maintenance Requirements

§63.7300 What are my operation and maintenance requirements?

(a) As required by §63.6(e)(1)(i), you must always operate and maintain your affected source, including air pollution control and monitoring equipment, in a manner consistent with good air pollution control practices for minimizing emissions at least to the levels required by this subpart.

(b) You must prepare and operate at all times according to a written operation and maintenance plan for the general operation and maintenance of new or existing by-product coke oven batteries. Each plan must address, at a minimum, the elements listed in paragraphs (b)(1) through (6) of this section.

(1) Frequency and method of recording underfiring gas parameters.

(2) Frequency and method of recording battery operating temperature, including measurement of individual flue and cross-wall temperatures.

(3) Procedures to prevent pushing an oven before it is fully coked.

(4) Procedures to prevent overcharging and undercharging of ovens, including measurement of coal moisture, coal bulk density, and procedures for determining volume of coal charged.

(5) Frequency and procedures for inspecting flues, burners, and nozzles.

(6) Schedule and procedures for the daily washing of baffles.

(c) You must prepare and operate at all times according to a written operation and maintenance plan for each capture system and control device applied to pushing emissions from a new or existing coke oven battery. Each plan must address at a minimum the elements in paragraphs (c)(1) through (3) of this section.

(1) Monthly inspections of the equipment that are important to the performance of the total capture system (*e.g.,* pressure sensors, dampers, and damper switches). This inspection must include observations of the physical appearance of the equipment (*e.g.,* presence of holes in ductwork or hoods, flow constrictions caused by dents or accumulated dust in ductwork, and fan erosion). In the event a defect or deficiency is found in the capture system (during a monthly inspection or between inspections), you must complete repairs within 30 days after the date that the defect or deficiency is discovered. If you determine that the repairs cannot be completed within 30 days, you must

submit a written request for an extension of time to complete the repairs that must be received by the permitting authority not more than 20 days after the date that the defect or deficiency is discovered. The request must contain a description of the defect or deficiency, the steps needed and taken to correct the problem, the interim steps being taken to mitigate the emissions impact of the defect or deficiency, and a proposed schedule for completing the repairs. The request shall be deemed approved unless and until such time as the permitting authority notifies you that it objects to the request. The permitting authority may consider all relevant factors in deciding whether to approve or deny the request (including feasibility and safety). Each approved schedule must provide for completion of repairs as expeditiously as practicable, and the permitting authority may request modifications to the proposed schedule as part of the approval process.

(2) Preventative maintenance for each control device, including a preventative maintenance schedule that is consistent with the manufacturer's instructions for routine and long-term maintenance.

(3) Corrective action for all baghouses applied to pushing emissions. In the event a bag leak detection system alarm is triggered, you must initiate corrective action to determine the cause of the alarm within 1 hour of the alarm, initiate corrective action to correct the cause of the problem within 24 hours of the alarm, and complete the corrective action as soon as practicable. Actions may include, but are not limited to:

(i) Inspecting the baghouse for air leaks, torn or broken bags or filter media, or any other condition that may cause an increase in emissions.

(ii) Sealing off defective bags or filter media.

(iii) Replacing defective bags or filter media or otherwise repairing the control device.

(iv) Sealing off a defective baghouse compartment.

(v) Cleaning the bag leak detection system probe, or otherwise repairing the bag leak detection system.

(vi) Shutting down the process producing the particulate emissions.

[68 FR 18025, Apr. 14, 2003, as amended at 70 FR 44289, Aug. 2, 2005]

General Compliance Requirements

§63.7310 What are my general requirements for complying with this subpart?

(a) You must be in compliance with the emission limitations, work practice standards, and operation and maintenance requirements in this subpart at all times, except during periods of startup, shutdown, and malfunction as defined in §63.2.

(b) During the period between the compliance date specified for your affected source in §63.7283 and the date upon which continuous monitoring systems have been installed and certified and any applicable operating limits have been set, you must maintain a log detailing the operation and maintenance of the process and emissions control equipment.

(c) You must develop a written startup, shutdown, and malfunction plan according to the provisions in §63.6(e)(3).

[68 FR 18025, Apr. 14, 2003, as amended at 71 FR 20467, Apr. 20, 2006]

Initial Compliance Requirements

§63.7320 By what date must I conduct performance tests or other initial compliance demonstrations?

(a) As required in §63.7(a)(2), you must conduct a performance test to demonstrate compliance with each limit in §63.7290(a) for emissions of particulate matter from a control device applied to pushing emissions that applies to you within 180 calendar days after the compliance date that is specified in §63.7283.

(b) You must conduct performance tests to demonstrate compliance with the TDS limit or constituent limit for quench water in §63.7295(a)(1) and each opacity limit in §63.7297(a) for a by-product coke oven battery stack by the compliance date that is specified in §63.7283.

(c) For each work practice standard and operation and maintenance requirement that applies to you, you must demonstrate initial compliance within 30 calendar days after the compliance date that is specified in §63.7283.

(d) If you commenced construction or reconstruction between July 3, 2001 and April 14, 2003, you must demonstrate initial compliance with either the proposed emission limit or the promulgated emission limit no later than October 14, 2003, or no later than 180 calendar days after startup of the source, whichever is later, according to §63.7(a)(2)(ix).

(e) If you commenced construction or reconstruction between July 3, 2001 and April 14, 2003, and you chose to comply with the proposed emission limit when demonstrating initial compliance, you must conduct a second performance test to demonstrate compliance with the promulgated emission limit by October 11, 2006, or after startup of the source, whichever is later, according to §63.7(a)(2)(ix).

§63.7321 When must I conduct subsequent performance tests?

For each control device subject to an emission limit for particulate matter in §63.7290(a), you must conduct subsequent performance tests no less frequently than twice (at mid-term and renewal) during each term of your title V operating permit.

§63.7322 What test methods and other procedures must I use to demonstrate initial compliance with the emission limits for particulate matter?

(a) You must conduct each performance test that applies to your affected source according to the requirements in paragraph (b) of this section.

(b) To determine compliance with the emission limit for particulate matter from a control device applied to pushing emissions where a cokeside shed is the capture system, follow the test methods and procedures in paragraphs (b)(1) and (2) of this section. To determine compliance with a process-weighted mass rate of particulate matter (lb/ton of coke) from a control device applied to pushing emissions where a cokeside shed is not used, follow the test methods and procedures in paragraphs (b)(1) through (4) of this section.

(1) Determine the concentration of particulate matter according to the following test methods in appendix A to 40 CFR part 60.

(i) Method 1 to select sampling port locations and the number of traverse points. Sampling sites must be located at the outlet of the control device and prior to any releases to the atmosphere.

(ii) Method 2, 2F, or 2G to determine the volumetric flow rate of the stack gas.

(iii) Method 3, 3A, or 3B to determine the dry molecular weight of the stack gas.

(iv) Method 4 to determine the moisture content of the stack gas.

(v) Method 5 or 5D, as applicable, to determine the concentration of front half particulate matter in the stack gas.

(2) During each particulate matter test run, sample only during periods of actual pushing when the capture system fan and control device are engaged. Collect a minimum sample volume of 30 dry standard cubic feet of gas during each test run. Three valid test runs are needed to comprise a performance test. Each run must start at the beginning of a push and finish at the end of a push (*i.e.*, sample for an integral number of pushes).

(3) Determine the total combined weight in tons of coke pushed during the duration of each test run according to the procedures in your source test plan for calculating coke yield from the quantity of coal charged to an individual oven.

(4) Compute the process-weighted mass emissions (E_p) for each test run using Equation 1 of this section as follows:

$$E_p = \frac{C \times Q \times T}{P \times K} \qquad \text{(Eq. 1)}$$

Where:

E_p = Process weighted mass emissions of particulate matter, lb/ton;

C = Concentration of particulate matter, gr/dscf;

Q = Volumetric flow rate of stack gas, dscf/hr;

T = Total time during a run that a sample is withdrawn from the stack during pushing, hr;

P = Total amount of coke pushed during the test run, tons; and

K = Conversion factor, 7,000 gr/lb.

[68 FR 18025, Apr. 14, 2003, as amended at 70 FR 44289, Aug. 2, 2005]

§63.7323 What procedures must I use to establish operating limits?

(a) For a venturi scrubber applied to pushing emissions from a coke oven battery, you must establish site-specific operating limits for pressure drop and scrubber water flow rate according to the procedures in paragraphs (a)(1) and (2) of this section.

(1) Using the continuous parameter monitoring systems (CPMS) required in §63.7330(b), measure and record the pressure drop and scrubber water flow rate for each particulate matter test run during periods of pushing. A minimum of one pressure drop measurement and one scrubber water flow rate measurement must be obtained for each push.

(2) Compute and record the average pressure drop and scrubber water flow rate for each test run. Your operating limits are the lowest average pressure drop and scrubber water flow rate values recorded during any of the three runs that meet the applicable emission limit.

(b) For a hot water scrubber applied to pushing emissions from a coke oven battery, you must establish site-specific operating limits for water pressure and water temperature according to the procedures in paragraphs (b)(1) and (2) of this section.

(1) Using the CPMS required in §63.7330(c), measure and record the hot water pressure and temperature for each particulate matter test run during periods of pushing. A minimum of one pressure measurement and one temperature measurement must be made just prior to each push by monitoring the hot water holding tank on the mobile scrubber car.

(2) Compute and record the average water pressure and temperature for each test run. Your operating limits are the lowest pressure and temperature values recorded during any of the three runs that meet the applicable emission limit.

(c) For a capture system applied to pushing emissions from a coke oven battery, you must establish a site-specific operating limit according to the procedures in paragraphs (c)(1), (2), or (3) of this section.

(1) If you elect the operating limit in §63.7290(b)(3) for volumetric flow rate, measure and record the total volumetric flow rate at the inlet of the control device during each push sampled for each particulate matter test run. Your operating limit is the lowest volumetric flow rate recorded during any of the three runs that meet the emission limit.

(2) If you elect the operating limit in §63.7290(b)(3)(i) for fan motor amperes, measure and record the fan motor amperes during each push sampled for each particulate matter test run. Your operating limit is the lowest fan motor amperes recorded during any of the three runs that meet the emission limit.

(3) If you elect the operating limit in §63.7290(b)(3)(ii) for static pressure or fan RPM, measure and record the static pressure at the inlet of the control device or fan RPM during each push sampled for each particulate matter test run. Your operating limit for static pressure is the minimum vacuum recorded during any of the three runs that meets the emission limit. Your operating limit for fan RPM is the lowest fan RPM recorded during any of the three runs that meets the emission limit.

(d) For a multicyclone applied to pushing emissions from a coke oven battery, you must establish a site-specific operating limit for pressure drop according to the procedures in paragraphs (d)(1) and (2) of this section.

(1) Using the CPMS required in §63.7330(f), measure and record the pressure drop for each particulate matter test run during periods of pushing. A minimum of one pressure drop measurement must be obtained for each push.

(2) Compute and record the average pressure drop for each test run. Your operating limit is the highest average pressure drop value recorded during any of the three runs that meet the emission limit.

(e) You may change the operating limit for a venturi scrubber, capture system, or mobile control device that captures emissions during pushing if you meet the requirements in paragraphs (e)(1) through (3) of this section.

(1) Submit a written notification to the Administrator of your request to conduct a new performance test to revise the operating limit.

(2) Conduct a performance test to demonstrate that emissions of particulate matter from the control device do not exceed the applicable limit in §63.7290(a).

(3) Establish revised operating limits according to the applicable procedures in paragraphs (a) through (d) of this section.

[68 FR 18025, Apr. 14, 2003, as amended at 69 FR 60818, Oct. 13, 2004]

§63.7324 What procedures must I use to demonstrate initial compliance with the opacity limits?

(a) You must conduct each performance test that applies to your affected source according to the requirements in paragraph (b) of this section.

(b) To determine compliance with the daily average opacity limit for stacks of 15 percent for a by-product coke oven battery on a normal coking cycle or 20 percent for a by-product coke oven battery on batterywide extended coking, follow the test methods and procedures in paragraphs (b)(1) through (3) of this section.

(1) Using the continuous opacity monitoring system (COMS) required in §63.7330(e), measure and record the opacity of emissions from each battery stack for a 24-hour period.

(2) Reduce the monitoring data to hourly averages as specified in §63.8(g)(2).

(3) Compute and record the 24-hour (daily) average of the COMS data.

§63.7325 What test methods and other procedures must I use to demonstrate initial compliance with the TDS or constituent limits for quench water?

(a) If you elect the TDS limit for quench water in §63.7295(a)(1)(i), you must conduct each performance test that applies to your affected source according to the conditions in paragraphs (a)(1) and (2) of this section.

(1) Take the quench water sample from a location that provides a representative sample of the quench water as applied to the coke (*e.g.,* from the header that feeds water to the quench tower reservoirs). Conduct sampling under normal and representative operating conditions.

(2) Determine the TDS concentration of the sample using Method 160.1 in 40 CFR part 136.3 (see "residue—filterable"), except that you must dry the total filterable residue at 103 to 105 °C (degrees Centigrade) instead of 180 °C.

(b) If at any time you elect to meet the alternative requirements for quench water in §63.7295(a)(1)(ii), you must establish a site-specific constituent limit according to the procedures in paragraphs (b)(1) through (4) of this section.

(1) Take a minimum of nine quench water samples from a location that provides a representative sample of the quench water as applied to the coke (*e.g.,* from the header that feeds water to the quench tower reservoirs). Conduct sampling under normal and representative operating conditions.

(2) For each sample, determine the TDS concentration according to the requirements in paragraph (a)(2) of this section and the concentration of benzene, benzo(a)pyrene, and naphthalene using the applicable methods in 40 CFR part 136 or an approved alternative method.

(3) Determine and record the highest sum of the concentrations of benzene, benzo(a)pyrene, and naphthalene in any sample that has a TDS concentration less than or equal to the TDS limit of 1,100 mg/L. This concentration is the site-specific constituent limit.

(4) Submit the site-specific limit, sampling results, and all supporting data and calculations to your permitting authority for review and approval.

(c) If you elect the constituent limit for quench water in §63.7295(a)(1)(ii), you must conduct each performance test that applies to your affected source according to the conditions in paragraphs (c)(1) and (2) of this section.

(1) Take a quench water sample from a location that provides a representative sample of the quench water as applied to the coke (*e.g.,* from the header that feeds water to the quench tower reservoirs). Conduct sampling under normal and representative operating conditions.

(2) Determine the sum of the concentration of benzene, benzo(a)pyrene, and naphthalene in the sample using the applicable methods in 40 CFR part 136 or an approved alternative method.

§63.7326 How do I demonstrate initial compliance with the emission limitations that apply to me?

(a) For each coke oven battery subject to the emission limit for particulate matter from a control device applied to pushing emissions, you have demonstrated initial compliance if you meet the requirements in paragraphs (a)(1) through (4) of this section that apply to you.

(1) The concentration of particulate matter, measured in accordance with the performance test procedures in §63.7322(b)(1) and (2), did not exceed 0.01 gr/dscf for a control device where a cokeside shed is used to capture pushing emissions or the process-weighted mass rate of particulate matter (lb/ton of coke), measured in accordance with the performance test procedures in §63.7322(b)(1) through (4), did not exceed:

(i) 0.02 lb/ton of coke if a moveable hood vented to a stationary control device is used to capture emissions;

(ii) If a mobile scrubber car that does not capture emissions during travel is used, 0.03 lb/ton of coke from a control device applied to pushing emissions from a short coke oven battery or 0.01 lb/ton of coke from a control device applied to pushing emissions from a tall coke oven battery; and

(iii) 0.04 lb/ton of coke if a mobile control device that captures emissions during travel is used.

(2) For each venturi scrubber applied to pushing emissions, you have established appropriate site-specific operating limits and have a record of the pressure drop and scrubber water flow rate measured during the performance test in accordance with §63.7323(a).

(3) For each hot water scrubber applied to pushing emissions, you have established appropriate site-specific operating limits and have a record of the water pressure and temperature measured during the performance test in accordance with §63.7323(b).

(4) For each capture system applied to pushing emissions, you have established an appropriate site-specific operating limit, and:

(i) If you elect the operating limit in §63.7290(b)(3) for volumetric flow rate, you have a record of the total volumetric flow rate at the inlet of the control device measured during the performance test in accordance with §63.7323(c)(1); or

(ii) If you elect the operating limit in §63.7290(b)(3)(i) for fan motor amperes, you have a record of the fan motor amperes during the performance test in accordance with §63.7323(c)(2); or

(iii) If you elect the operating limit in §63.7290(b)(3)(ii) for static pressure or fan RPM, you have a record of the static pressure at the inlet of the control device or fan RPM measured during the performance test in accordance with §63.7323(c)(3).

(5) For each multicyclone applied to pushing emissions, you have established an appropriate site-specific operating limit and have a record of the pressure drop measured during the performance test in accordance with §63.7323(d).

(b) For each new or existing by-product coke oven battery subject to the opacity limit for stacks in §63.7296(a), you have demonstrated initial compliance if the daily average opacity, as measured according to the performance test procedures in §63.7324(b), is no more than 15 percent for a battery on a normal coking cycle or 20 percent for a battery on batterywide extended coking.

(c) For each new or existing by-product coke oven battery subject to the TDS limit or constituent limits for quench water in §63.7295(a)(1),

(1) You have demonstrated initial compliance with the TDS limit in §63.7295(a)(1)(i) if the TDS concentration, as measured according to the performance test procedures in §63.7325(a), does not exceed 1,100 mg/L.

(2) You have demonstrated initial compliance with the constituent limit in §63.7295(a)(1)(ii) if:

(i) You have established a site-specific constituent limit according to the procedures in §63.7325(b); and

(ii) The sum of the constituent concentrations, as measured according to the performance test procedures in §63.7325(c), is less than or equal to the site-specific limit.

(d) For each by-product coke oven battery stack subject to an opacity limit in §63.7296(a) and each by-product coke oven battery subject to the requirements for quench water in §63.7295(a)(1), you must submit a notification of compliance status containing the results of the COMS performance test for battery stacks and the quench water performance test (TDS or constituent limit) according to §63.7340(e)(1). For each particulate matter emission limitation that applies to you, you must submit a notification of compliance status containing the results of the performance test according to §63.7340(e)(2).

[68 FR 18025, Apr. 14, 2003, as amended at 69 FR 60819, Oct. 13, 2004]

§63.7327 How do I demonstrate initial compliance with the work practice standards that apply to me?

(a) For each by-product coke oven battery with vertical flues subject to the work practice standards for fugitive pushing emissions in §63.7291(a), you have demonstrated initial compliance if you certify in your notification of compliance status that you will meet each of the work practice requirements beginning no later than the compliance date that is specified in §63.7283.

(b) For each by-product coke oven battery with horizontal flues subject to the work practice standards for fugitive pushing emissions in §63.7292(a), you have demonstrated initial compliance if you have met the requirements of paragraphs (b)(1) and (2) of this section:

(1) You have prepared and submitted a written plan and supporting documentation establishing appropriate minimum flue temperatures for different coking times and the lowest acceptable temperature to the Administrator (or delegated authority) for review and approval; and

(2) You certify in your notification of compliance status that you will meet each of the work practice requirements beginning no later than the compliance date that is specified in §63.7283.

(c) For each non-recovery coke oven battery subject to the work practice standards for fugitive pushing emissions in §63.7293(a), you have demonstrated initial compliance if you certify in your notification of compliance status that you will meet each of the work practice requirements beginning no later than the compliance date that is specified in §63.7283.

(d) For each by-product coke oven battery subject to the work practice standards for soaking in §63.7294, you have demonstrated initial compliance if you have met the requirements of paragraphs (d)(1) and (2) of this section:

(1) You have prepared and submitted a written work practice plan in accordance with §63.7294(a); and

(2) You certify in your notification of compliance status that you will meet each of the work practice requirements beginning no later than the compliance date that is specified in §63.7283.

(e) For each coke oven battery, you have demonstrated initial compliance with the work practice standards for quenching in §63.7295(b) if you certify in your notification of compliance status that you have met the requirements of paragraphs (e)(1) and (2) of this section:

(1) You have installed the required equipment in each quench tower; and

(2) You will meet each of the work practice requirements beginning no later than the compliance date that is specified in §63.7283.

(f) For each work practice standard that applies to you, you must submit a notification of compliance status according to the requirements in §63.7340(e)(1).

§63.7328 How do I demonstrate initial compliance with the operation and maintenance requirements that apply to me?

You have demonstrated initial compliance if you certify in your notification of compliance status that you have met the requirements of paragraphs (a) through (d) of this section:

(a) You have prepared the operation and maintenance plans according to the requirements in §63.7300(b) and (c);

(b) You will operate each by-product coke oven battery and each capture system and control device applied to pushing emissions from a coke oven battery according to the procedures in the plans beginning no later than the compliance date that is specified in §63.7283;

(c) You have prepared a site-specific monitoring plan according to the requirements in §63.7331(b); and

(d) You submit a notification of compliance status according to the requirements in §63.7340(e).

Continuous Compliance Requirements

§63.7330 What are my monitoring requirements?

(a) For each baghouse applied to pushing emissions from a coke oven battery, you must at all times monitor the relative change in particulate matter loadings using a bag leak detection system according to the requirements in §63.7331(a) and conduct inspections at their specified frequency according to the requirements in paragraphs (a)(1) through (8) of this section.

(1) Monitor the pressure drop across each baghouse cell each day to ensure pressure drop is within the normal operating range identified in the manual;

(2) Confirm that dust is being removed from hoppers through weekly visual inspections or equivalent means of ensuring the proper functioning of removal mechanisms;

(3) Check the compressed air supply for pulse-jet baghouses each day;

(4) Monitor cleaning cycles to ensure proper operation using an appropriate methodology;

(5) Check bag cleaning mechanisms for proper functioning through monthly visual inspection or equivalent means;

(6) Make monthly visual checks of bag tension on reverse air and shaker-type baghouses to ensure that bags are not kinked (kneed or bent) or laying on their sides. You do not have to make this check for shaker-type baghouses using self-tensioning (spring-loaded) devices;

(7) Confirm the physical integrity of the baghouse through quarterly visual inspections of the baghouse interior for air leaks; and

(8) Inspect fans for wear, material buildup, and corrosion through quarterly visual inspections, vibration detectors, or equivalent means.

(b) For each venturi scrubber applied to pushing emissions, you must at all times monitor the pressure drop and water flow rate using a CPMS according to the requirements in §63.7331(e).

(c) For each hot water scrubber applied to pushing emissions, you must at all times monitor the water pressure and temperature using a CPMS according to the requirements in §63.7331(f).

(d) For each capture system applied to pushing emissions, you must at all times monitor the volumetric flow rate according to the requirements in §63.7331(g), the fan motor amperes according to the requirements in §63.7331(h), or the static pressure or the fan RPM according to the requirements in §63.7331(i).

(e) For each by-product coke oven battery, you must monitor at all times the opacity of emissions exiting each stack using a COMS according to the requirements in §63.7331(j).

(f) For each multicyclone applied to pushing emissions, you must monitor at all times the pressure drop using a CPMS according to the requirements in §63.7331(k).

[68 FR 18025, Apr. 14, 2003, as amended at 69 FR 60819, Oct. 13, 2004]

§63.7331 What are the installation, operation, and maintenance requirements for my monitors?

(a) For each baghouse applied to pushing emissions, you must install, operate, and maintain each bag leak detection system according to the requirements in paragraphs (a)(1) through (7) of this section.

(1) The system must be certified by the manufacturer to be capable of detecting emissions of particulate matter at concentrations of 10 milligrams per actual cubic meter (0.0044 grains per actual cubic foot) or less;

(2) The system must provide output of relative changes in particulate matter loadings;

(3) The system must be equipped with an alarm that will sound when an increase in relative particulate loadings is detected over a preset level. The alarm must be located such that it can be heard by the appropriate plant personnel;

(4) Each system that works based on the triboelectric effect must be installed, operated, and maintained in a manner consistent with the guidance document, “Fabric Filter Bag Leak Detection Guidance” (EPA-454/R-98-015, September 1997). You may install, operate, and maintain other types of bag leak detection systems in a manner consistent with the manufacturer's written specifications and recommendations;

(5) To make the initial adjustment of the system, establish the baseline output by adjusting the sensitivity (range) and the averaging period of the device. Then, establish the alarm set points and the alarm delay time;

(6) Following the initial adjustment, do not adjust the sensitivity or range, averaging period, alarm set points, or alarm delay time, except as detailed in your operation and maintenance plan. Do not increase the sensitivity by more than 100 percent or decrease the sensitivity by more than 50 percent over a 365-day period unless a responsible official certifies, in writing, that the baghouse has been inspected and found to be in good operating condition; and

(7) Where multiple detectors are required, the system's instrumentation and alarm may be shared among detectors.

(b) For each CPMS required in §63.7330, you must develop and make available for inspection upon request by the permitting authority a site-specific monitoring plan that addresses the requirements in paragraphs (b)(1) through (6) of this section.

(1) Installation of the CPMS sampling probe or other interface at a measurement location relative to each affected process unit such that the measurement is representative of control of the exhaust emissions (*e.g.,* on or downstream of the last control device);

(2) Performance and equipment specifications for the sample interface, the parametric signal analyzer, and the data collection and reduction system;

(3) Performance evaluation procedures and acceptance criteria (*e.g.,* calibrations);

(4) Ongoing operation and maintenance procedures in accordance with the general requirements of §§63.8(c)(1), (3), (4)(ii), (7), and (8);

(5) Ongoing data quality assurance procedures in accordance with the general requirements of §63.8(d); and

(6) Ongoing recordkeeping and reporting procedures in accordance the general requirements of §§63.10(c), (e)(1), and (e)(2)(i).

(c) You must conduct a performance evaluation of each CPMS in accordance with your site-specific monitoring plan.

(d) You must operate and maintain the CPMS in continuous operation according to the site-specific monitoring plan.

(e) For each venturi scrubber applied to pushing emissions, you must install, operate, and maintain CPMS to measure and record the pressure drop across the scrubber and scrubber water flow rate during each push according to the requirements in paragraphs (b) through (d) of this section except as specified in paragraphs (e)(1) through (3) of this section.

(1) Each CPMS must complete a measurement at least once per push;

(2) Each CPMS must produce valid data for all pushes; and

(3) Each CPMS must determine and record the daily (24-hour) average of all recorded readings.

(f) For each hot water scrubber applied to pushing emissions, you must install, operate, and maintain CPMS to measure and record the water pressure and temperature during each push according to the requirements in paragraphs (b) through (d) of this section, except as specified in paragraphs (e)(1) through (3) of this section.

(g) If you elect the operating limit in §63.7290(b)(3) for a capture system applied to pushing emissions, you must install, operate, and maintain a device to measure the total volumetric flow rate at the inlet of the control device.

(h) If you elect the operating limit in §63.7290(b)(3)(i) for a capture system applied to pushing emissions, you must install, operate, and maintain a device to measure the fan motor amperes.

(i) If you elect the operating limit in §63.7290(b)(3)(ii) for a capture system applied to pushing emissions, you must install, operate and maintain a device to measure static pressure at the inlet of the control device or the fan RPM.

(j) For each by-product coke oven battery, you must install, operate, and maintain a COMS to measure and record the opacity of emissions exiting each stack according to the requirements in paragraphs (j)(1) through (5) of this section.

(1) You must install, operate, and maintain each COMS according to the requirements in §63.8(e) and Performance Specification 1 in 40 CFR part 60, appendix B. Identify periods the COMS is out-of-control, including any periods that the COMS fails to pass a daily calibration drift assessment, quarterly performance audit, or annual zero alignment audit.

(2) You must conduct a performance evaluation of each COMS according to the requirements in §63.8 and Performance Specification 1 in appendix B to 40 CFR part 60;

(3) You must develop and implement a quality control program for operating and maintaining each COMS according to the requirements in §63.8(d). At minimum, the quality control program must include a daily calibration drift assessment, quarterly performance audit, and an annual zero alignment audit of each COMS;

(4) Each COMS must complete a minimum of one cycle of sampling and analyzing for each successive 10-second period and one cycle of data recording for each successive 6-minute period. You must reduce the COMS data as specified in §63.8(g)(2).

(5) You must determine and record the hourly and daily (24-hour) average opacity according to the procedures in §63.7324(b) using all the 6-minute averages collected for periods during which the COMS is not out-of-control.

(k) For each multicyclone applied to pushing emissions, you must install, operate, and maintain CPMS to measure and record the pressure drop across each multicyclone during each push according to the requirements in paragraphs (b) through (d) of this section except as specified in paragraphs (e)(1) through (3) of this section.

[68 FR 18025, Apr. 14, 2003, as amended at 69 FR 60819, Oct. 13, 2004]

§63.7332 How do I monitor and collect data to demonstrate continuous compliance?

(a) Except for monitor malfunctions, associated repairs, and required quality assurance or control activities (including as applicable, calibration checks and required zero and span adjustments), you must monitor continuously (or collect data at all required intervals) at all times the affected source is operating.

(b) You may not use data recorded during monitoring malfunctions, associated repairs, and required quality assurance or control activities in data averages and calculations used to report emission or operating levels, or in fulfilling a minimum data availability requirement, if applicable. You must use all the data collected during all other periods in assessing compliance. A monitoring malfunction is any sudden, infrequent, not reasonably preventable failure of the monitor to provide valid data. Monitoring failures that are caused in part by poor maintenance or careless operation are not malfunctions.

§63.7333 How do I demonstrate continuous compliance with the emission limitations that apply to me?

(a) For each control device applied to pushing emissions and subject to the emission limit in §63.7290(a), you must demonstrate continuous compliance by meeting the requirements in paragraphs (a)(1) and (2) of this section:

(1) Maintaining emissions of particulate matter at or below the applicable limits in paragraphs §63.7290(a)(1) through (4); and

(2) Conducting subsequent performance tests to demonstrate continuous compliance no less frequently than twice during each term of your title V operating permit (at mid-term and renewal).

(b) For each venturi scrubber applied to pushing emissions and subject to the operating limits in §63.7290(b)(1), you must demonstrate continuous compliance by meeting the requirements in paragraphs (b)(1) through (3) of this section.

(1) Maintaining the daily average pressure drop and scrubber water flow rate at levels no lower than those established during the initial or subsequent performance test.

(2) Operating and maintaining each CPMS according to §63.7331(b) and recording all information needed to document conformance with these requirements.

(3) Collecting and reducing monitoring data for pressure drop and scrubber water flow rate according to §63.7331(e)(1) through (3).

(c) For each hot water scrubber applied to pushing emissions and subject to the operating limits in §63.7290(b)(2), you must demonstrate continuous compliance by meeting the requirements in paragraphs (c)(1) through (3) of this section.

(1) Maintaining the daily average water pressure and temperature at levels no lower than those established during the initial or subsequent performance test.

(2) Operating and maintaining each CPMS according to §63.7331(b) and recording all information needed to document conformance with these requirements.

(3) Collecting and reducing monitoring data for water pressure and temperature according to §63.7331(f).

(d) For each capture system applied to pushing emissions and subject to the operating limit in §63.7290(b)(3), you must demonstrate continuous compliance by meeting the requirements in paragraph (d)(1), (2), or (3) of this section:

(1) If you elect the operating limit for volumetric flow rate in §63.7290(b)(3):

(i) Maintaining the daily average volumetric flow rate at the inlet of the control device at or above the minimum level established during the initial or subsequent performance test; and

(ii) Checking the volumetric flow rate at least every 8 hours to verify the daily average is at or above the minimum level established during the initial or subsequent performance test and recording the results of each check.

(2) If you elect the operating limit for fan motor amperes in §63.7290(b)(3)(i):

(i) Maintaining the daily average fan motor amperages at or above the minimum level established during the initial or subsequent performance test; and

(ii) Checking the fan motor amperage at least every 8 hours to verify the daily average is at or above the minimum level established during the initial or subsequent performance test and recording the results of each check.

(3) If you elect the operating limit for static pressure or fan RPM in §63.7290(b)(3)(ii):

(i) Maintaining the daily average static pressure at the inlet to the control device at an equal or greater vacuum than established during the initial or subsequent performance test or the daily average fan RPM at or above the minimum level established during the initial or subsequent performance test; and

(ii) Checking the static pressure or fan RPM at least every 8 hours to verify the daily average static pressure at the inlet to the control device is at an equal or greater vacuum than established during the initial or subsequent performance test or the daily average fan RPM is at or above the minimum level established during the initial or subsequent performance test and recording the results of each check.

(e) Beginning on the first day compliance is required under §63.7283, you must demonstrate continuous compliance for each by-product coke oven battery subject to the opacity limit for stacks in §63.7296(a) by meeting the requirements in paragraphs (e)(1) and (2) of this section:

(1) Maintaining the daily average opacity at or below 15 percent for a battery on a normal coking cycle or 20 percent for a battery on batterywide extended coking; and

(2) Operating and maintaining a COMS and collecting and reducing the COMS data according to §63.7331(j).

(f) Beginning on the first day compliance is required under §63.7283, you must demonstrate continuous compliance with the TDS limit for quenching in §63.7295(a)(1)(i) by meeting the requirements in paragraphs (f)(1) and (2) of this section:

(1) Maintaining the TDS content of the water used to quench hot coke at 1,100 mg/L or less; and

(2) Determining the TDS content of the quench water at least weekly according to the requirements in §63.7325(a) and recording the sample results.

(g) Beginning on the first day compliance is required under §63.7283, you must demonstrate continuous compliance with the constituent limit for quenching in §63.7295(a)(1)(ii) by meeting the requirements in paragraphs (g)(1) and (2) of this section:

(1) Maintaining the sum of the concentrations of benzene, benzo(a)pyrene, and naphthalene in the water used to quench hot coke at levels less than or equal to the site-specific limit approved by the permitting authority; and

(2) Determining the sum of the constituent concentrations at least monthly according to the requirements in §63.7325(c) and recording the sample results.

(h) For each multicyclone applied to pushing emissions and subject to the operating limit in §63.7290(b)(4), you must demonstrate compliance by meeting the requirements in paragraphs (h)(1) through (3) of this section.

(1) Maintaining the daily average pressure drop at a level at or below the level established during the initial or subsequent performance test.

(2) Operating and maintaining each CPMS according to §63.7331(k) and recording all information needed to document conformance with these requirements.

(3) Collecting and reducing monitoring data for pressure drop according to §63.7331(e)(1) through (3).

[68 FR 18025, Apr. 14, 2003, as amended at 69 FR 60819, Oct. 13, 2004]

§63.7334 How do I demonstrate continuous compliance with the work practice standards that apply to me?

(a) For each by-product coke oven battery with vertical flues subject to the work practice standards for fugitive pushing emissions in §63.7291(a), you must demonstrate continuous compliance according to the requirements of paragraphs (a)(1) through (8) of this section:

(1) Observe and record the opacity of fugitive emissions for four consecutive pushes per operating day, except you may make fewer or non-consecutive observations as permitted by §63.7291(a)(3). Maintain records of the pushing schedule for each oven and records indicating the legitimate operational reason for any change in the pushing schedule according to §63.7291(a)(4).

(2) Observe and record the opacity of fugitive emissions from each oven in a battery at least once every 90 days. If an oven cannot be observed during a 90-day period, observe and record the opacity of the first push of that oven following the close of the 90-day period that can be read in accordance with the procedures in paragraphs (a)(1) through (8) of this section.

(3) Make all observations and calculations for opacity observations of fugitive pushing emissions in accordance with Method 9 in appendix A to 40 CFR part 60 using a Method 9 certified observer unless you have an approved alternative procedure under paragraph (a)(7) of this section.

(4) Record pushing opacity observations at 15-second intervals as required in section 2.4 of Method 9 (appendix A to 40 CFR part 60). The requirement in section 2.4 of Method 9 for a minimum of 24 observations does not apply, and the data reduction requirements in section 2.5 of Method 9 do not apply. The requirement in §63.6(h)(5)(ii)(B) for obtaining at least 3 hours of observations (thirty 6-minute averages) to demonstrate initial compliance does not apply.

(5) If fewer than six but at least four 15-second observations can be made, use the average of the total number of observations to calculate average opacity for the push. Missing one or more observations during the push (*e.g.,* as the quench car passes behind a building) does not invalidate the observations before or after the interference for that push. However, a minimum of four 15-second readings must be made for a valid observation.

(6) Begin observations for a push at the first detectable movement of the coke mass. End observations of a push when the quench car enters the quench tower.

(i) For a battery without a cokeside shed, observe fugitive pushing emissions from a position at least 10 meters from the quench car that provides an unobstructed view and avoids interferences from the topside of the battery. This may require the observer to be positioned at an angle to the quench car rather than perpendicular to it. Typical interferences to avoid include emissions from open standpipes and charging. Observe the opacity of emissions above the battery top with the sky as the background where possible. Record the oven number of any push not observed because of obstructions or interferences.

(ii) For a battery with a cokeside shed, the observer must be in a position that provides an unobstructed view and avoids interferences from the topside of the battery. Typical interferences to avoid include emissions from open standpipes and charging. Observations must include any fugitive emissions that escape from the top of the shed, from the ends of the shed, or from the area where the shed is joined to the battery. If the observer does not have a clear view to identify when a push starts or ends, a second person can be positioned to signal the start or end of the push and notify the observer when to start or end the observations. Radio communications with other plant personnel (*e.g.,* pushing ram operator or quench car operator) may also serve to notify the observer of the start or end of a push. Record the oven number of any push not observed because of obstructions or interferences.

(iii) You may reposition after the push to observe emissions during travel if necessary.

(7) If it is infeasible to implement the procedures in paragraphs (a)(1) through (6) of this section for an oven due to physical obstructions, nighttime pushes, or other reasons, you may apply to your permitting authority for permission to use an alternative procedure. The application must provide a detailed explanation of why it is infeasible to use the procedures in paragraphs (a)(1) through (6) of this section, identify the oven and battery numbers, and describe the alternative procedure. An alternative procedure must identify whether the coke in that oven is not completely coked, either before, during, or after an oven is pushed.

(8) For each oven observed that exceeds an opacity of 30 percent for any short battery or 35 percent for any tall battery, you must take corrective action and/or increase the coking time in accordance with §63.7291(a). Maintain records documenting conformance with the requirements in §63.7291(a).

(b) For each by-product coke oven battery with horizontal flues subject to the work practice standards for fugitive pushing emissions in §63.7292(a), you must demonstrate continuous compliance by having met the requirements of paragraphs (b)(1) through (3) of this section:

(1) Measuring and recording the temperature of all flues on two ovens per day within 2 hours before the oven's scheduled pushing time and ensuring that the temperature of each oven is measured and recorded at least once every month;

(2) Recording the time each oven is charged and pushed and calculating and recording the net coking time for each oven; and

(3) Increasing the coking time for each oven that falls below the minimum flue temperature trigger established for that oven's coking time in the written plan required in §63.7292(a)(1), assigning the oven to the oven-directed program, and recording all relevant information according to the requirements in §63.7292(a)(4) including, but not limited to, daily pushing schedules, diagnostic procedures, corrective actions, and oven repairs.

(c) For each non-recovery coke oven battery subject to the work practice standards in §63.7293(a), you must demonstrate continuous compliance by maintaining records that document each visual inspection of an oven prior to pushing and that the oven was not pushed unless there was no smoke in the open space above the coke bed and there was an unobstructed view of the door on the opposite side of the oven.

(d) For each by-product coke oven battery subject to the work practice standard for soaking in §63.7294(a), you must demonstrate continuous compliance by maintaining records that document conformance with requirements in §63.7294(a)(1) through (5).

(e) For each coke oven battery subject to the work practice standard for quenching in §63.7295(b), you must demonstrate continuous compliance according to the requirements of paragraphs (e)(1) through (3) of this section:

(1) Maintaining baffles in each quench tower such that no more than 5 percent of the cross-sectional area of the tower is uncovered or open to the sky as required in §63.7295(b)(1);

(2) Maintaining records that document conformance with the washing, inspection, and repair requirements in §63.7295(b)(2), including records of the ambient temperature on any day that the baffles were not washed; and

(3) Maintaining records of the source of makeup water to document conformance with the requirement for acceptable makeup water in §63.7295(a)(2).

§63.7335 How do I demonstrate continuous compliance with the operation and maintenance requirements that apply to me?

(a) For each by-product coke oven battery, you must demonstrate continuous compliance with the operation and maintenance requirements in §63.7300(b) by adhering at all times to the plan requirements and recording all information needed to document conformance.

(b) For each coke oven battery with a capture system or control device applied to pushing emissions, you must demonstrate continuous compliance with the operation and maintenance requirements in §63.7300(c) by meeting the requirements of paragraphs (b)(1) through (3) of this section:

(1) Making monthly inspections of capture systems according to §63.7300(c)(1) and recording all information needed to document conformance with these requirements;

(2) Performing preventative maintenance for each control device according to §63.7300(c)(2) and recording all information needed to document conformance with these requirements; and

(3) Initiating and completing corrective action for a bag leak detection system alarm according to §63.7300(c)(3) and recording all information needed to document conformance with these requirements. This includes records of the times the bag leak detection system alarm sounds, and for each valid alarm, the time you initiated corrective action, the corrective action(s) taken, and the date on which corrective action is completed.

(c) To demonstrate continuous compliance with the operation and maintenance requirements for a baghouse applied to pushing emissions from a coke oven battery in §63.7331(a), you must inspect and maintain each baghouse according to the requirements in §63.7331(a)(1) through (8) and record all information needed to document conformance with these requirements. If you increase or decrease the sensitivity of the bag leak detection system beyond the limits specified in §63.7331(a)(6), you must include a copy of the required written certification by a responsible official in the next semiannual compliance report.

(d) You must maintain a current copy of the operation and maintenance plans required in §63.7300(b) and (c) onsite and available for inspection upon request. You must keep the plans for the life of the affected source or until the affected source is no longer subject to the requirements of this subpart.

§63.7336 What other requirements must I meet to demonstrate continuous compliance?

(a) *Deviations.* You must report each instance in which you did not meet each emission limitation in this subpart that applies to you. This includes periods of startup, shutdown, and malfunction. You must also report each instance in which you did not meet each work practice standard or operation and maintenance requirement in this subpart that applies to you. These instances are deviations from the emission limitations (including operating limits), work practice standards, and operation and maintenance requirements in this subpart. These deviations must be reported according to the requirements in §63.7341.

(b) *Startup, shutdowns, and malfunctions.* (1) Consistent with §§63.6(e) and 63.7(e)(1), deviations that occur during a period of startup, shutdown, or malfunction are not violations if you demonstrate to the Administrator's satisfaction that you were operating in accordance with §63.6(e)(1).

(2) The Administrator will determine whether deviations that occur during a period of startup, shutdown, or malfunction are violations, according to the provisions in §63.6(e).

[68 FR 18025, Apr. 14, 2003, as amended at 71 FR 20467, Apr. 20, 2006]

Notification, Reports, and Records

§63.7340 What notifications must I submit and when?

(a) You must submit all of the notifications in §§63.6(h)(4) and (5), 63.7(b) and (c), 63.8(e) and (f)(4), and 63.9(b) through (h) that apply to you by the specified dates.

(b) As specified in §63.9(b)(2), if you startup your affected source before April 14, 2003, you must submit your initial notification no later than August 12, 2003.

(c) As specified in §63.9(b)(3), if you startup your new affected source on or after April 14, 2003, you must submit your initial notification no later than 120 calendar days after you become subject to this subpart.

(d) If you are required to conduct a performance test, you must submit a notification of intent to conduct a performance test at least 60 calendar days before the performance test is scheduled to begin as required in §63.7(b)(1).

(e) If you are required to conduct a performance test, opacity observation, or other initial compliance demonstration, you must submit a notification of compliance status according to §63.9(h)(2)(ii).

(1) For each initial compliance demonstration that does not include a performance test, you must submit the notification of compliance status before the close of business on the 30th calendar day following the completion of the initial compliance demonstration.

(2) For each initial compliance demonstration that does include a performance test, you must submit the notification of compliance status, including the performance test results, before the close of business on the 60th calendar day following completion of the performance test according to §63.10(d)(2).

(f) For each by-product coke oven battery with horizontal flues, you must notify the Administrator (or delegated authority) of the date on which the study of flue temperatures required by §63.7292(a)(3) will be initiated. You must submit this notification no later than 7 days prior to the date you initiate the study.

§63.7341 What reports must I submit and when?

(a) *Compliance report due dates.* Unless the Administrator has approved a different schedule, you must submit quarterly compliance reports for battery stacks and semiannual compliance reports for all other affected sources to your permitting authority according to the requirements in paragraphs (a)(1) through (4) of this section.

(1) The first quarterly compliance report for battery stacks must cover the period beginning on the compliance date that is specified for your affected source in §63.7283 and ending on the last date of the third calendar month. Each subsequent compliance report must cover the next calendar quarter.

(2) The first semiannual compliance report must cover the period beginning on the compliance date that is specified for your affected source in §63.7283 and ending on June 30 or December 31, whichever date comes first after the compliance date that is specified for your affected source. Each subsequent compliance report must cover the semiannual reporting period from January 1 through June 30 or the semiannual reporting period from July 1 through December 31.

(3) All quarterly compliance reports for battery stacks must be postmarked or delivered no later than one calendar month following the end of the quarterly reporting period. All semiannual compliance reports must be postmarked or delivered no later than July 31 or January 31, whichever date is the first date following the end of the semiannual reporting period.

(4) For each affected source that is subject to permitting regulations pursuant to 40 CFR part 70 or 40 CFR part 71, and if the permitting authority has established dates for submitting semiannual reports pursuant to 40 CFR 70.6(a)(3)(iii)(A) or 40 CFR 71.6(a)(3)(iii)(A), you may submit the first and subsequent compliance reports according to the dates the permitting authority has established instead of according to the dates in paragraphs (a)(1) through (3) of this section.

(b) *Quarterly compliance report contents.* Each quarterly report must provide information on compliance with the emission limitations for battery stacks in §63.7296. The reports must include the information in paragraphs (c)(1) through (3), and as applicable, paragraphs (c)(4) through (8) of this section.

(c) *Semiannual compliance report contents.* Each compliance report must provide information on compliance with the emission limitations, work practice standards, and operation and maintenance requirements for all affected sources except battery stacks. The reports must include the information in paragraphs (c)(1) through (3) of this section, and as applicable, paragraphs (c)(4) through (8) of this section.

(1) Company name and address.

(2) Statement by a responsible official, with the official's name, title, and signature, certifying the truth, accuracy, and completeness of the content of the report.

(3) Date of report and beginning and ending dates of the reporting period.

(4) If you had a startup, shutdown, or malfunction during the reporting period and you took actions consistent with your startup, shutdown, and malfunction plan, the compliance report must include the information in §63.10(d)(5)(i).

(5) If there were no deviations from the continuous compliance requirements in §63.7333(e) for battery stacks, a statement that there were no deviations from the emission limitations during the reporting period. If there were no deviations from the continuous compliance requirements in §§63.7333 through 63.7335 that apply to you (for all

affected sources other than battery stacks), a statement that there were no deviations from the emission limitations, work practice standards, or operation and maintenance requirements during the reporting period.

(6) If there were no periods during which a continuous monitoring system (including COMS, continuous emission monitoring system (CEMS), or CPMS) was out-of-control as specified in §63.8(c)(7), a statement that there were no periods during which a continuous monitoring system was out-of-control during the reporting period.

(7) For each deviation from an emission limitation in this subpart (including quench water limits) and for each deviation from the requirements for work practice standards in this subpart that occurs at an affected source where you are not using a continuous monitoring system (including a COMS, CEMS, or CPMS) to comply with the emission limitations in this subpart, the compliance report must contain the information in paragraphs (c)(4) and (7)(i) and (ii) of this section. This includes periods of startup, shutdown, and malfunction.

(i) The total operating time of each affected source during the reporting period.

(ii) Information on the number, duration, and cause of deviations (including unknown cause, if applicable) as applicable and the corrective action taken.

(8) For each deviation from an emission limitation occurring at an affected source where you are using a continuous monitoring system (including COMS, CEMS, or CPMS) to comply with the emission limitation in this subpart, you must include the information in paragraphs (c)(4) and (8)(i) through (xii) of this section. This includes periods of startup, shutdown, and malfunction.

(i) The date and time that each malfunction started and stopped.

(ii) The date and time that each continuous monitoring system (including COMS, CEMS, or CPMS) was inoperative, except for zero (low-level) and high-level checks.

(iii) The date, time, and duration that each continuous monitoring system (including COMS, CEMS, or CPMS) was out-of-control, including the information in §63.8(c)(8).

(iv) The date and time that each deviation started and stopped, and whether each deviation occurred during a period of startup, shutdown, or malfunction or during another period.

(v) A summary of the total duration of the deviation during the reporting period and the total duration as a percent of the total source operating time during that reporting period.

(vi) A breakdown of the total duration of the deviations during the reporting period into those that are due to startup, shutdown, control equipment problems, process problems, other known causes, and other unknown causes.

(vii) A summary of the total duration of continuous monitoring system downtime during the reporting period and the total duration of continuous monitoring system downtime as a percent of the total source operating time during the reporting period.

(viii) An identification of each HAP that was monitored at the affected source.

(ix) A brief description of the process units.

(x) A brief description of the continuous monitoring system.

(xi) The date of the latest continuous monitoring system certification or audit.

(xii) A description of any changes in continuous monitoring systems, processes, or controls since the last reporting period.

(d) *Immediate startup, shutdown, and malfunction report.* If you had a startup, shutdown, or malfunction during the semiannual reporting period that was not consistent with your startup, shutdown, and malfunction plan, you must submit an immediate startup, shutdown, and malfunction report according to the requirements in §63.10(d)(5)(ii).

(e) *Part 70 monitoring report.* If you have obtained a title V operating permit for an affected source pursuant to 40 CFR part 70 or 40 CFR part 71, you must report all deviations as defined in this subpart in the semiannual monitoring report required by 40 CFR 70.6(a)(3)(iii)(A) or 40 CFR 71.6(a)(3)(iii)(A). If you submit a compliance report for an affected source along with, or as part of, the semiannual monitoring report required by 40 CFR 70.6(a)(3)(iii)(A) or 40 CFR 71.6(a)(3)(iii)(A), and the compliance report includes all the required information concerning deviations from any emission limitation or work practice standard in this subpart, submission of the compliance report satisfies any obligation to report the same deviations in the semiannual monitoring report. However, submission of a compliance report does not otherwise affect any obligation you may have to report deviations from permit requirements to your permitting authority.

§63.7342 What records must I keep?

(a) You must keep the records specified in paragraphs (a)(1) through (3) of this section.

(1) A copy of each notification and report that you submitted to comply with this subpart, including all documentation supporting any initial notification or notification of compliance status that you submitted, according to the requirements in §63.10(b)(2)(xiv).

(2) The records in §63.6(e)(3)(iii) through (v) related to startup, shutdown, and malfunction.

(3) Records of performance tests, performance evaluations, and opacity observations as required in §63.10(b)(2)(viii).

(b) For each COMS or CEMS, you must keep the records specified in paragraphs (b)(1) through (4) of this section.

(1) Records described in §63.10(b)(2)(vi) through (xi).

(2) Monitoring data for COMS during a performance evaluation as required in §63.6(h)(7)(i) and (ii).

(3) Previous (that is, superceded) versions of the performance evaluation plan as required in §63.8(d)(3).

(4) Records of the date and time that each deviation started and stopped, and whether the deviation occurred during a period of startup, shutdown, or malfunction or during another period.

(c) You must keep the records in §63.6(h)(6) for visual observations.

(d) You must keep the records required in §§63.7333 through 63.7335 to show continuous compliance with each emission limitation, work practice standard, and operation and maintenance requirement that applies to you.

§63.7343 In what form and how long must I keep my records?

(a) You must keep your records in a form suitable and readily available for expeditious review, according to §63.10(b)(1).

(b) As specified in §63.10(b)(1), you must keep each record for 5 years following the date of each occurrence, measurement, maintenance, corrective action, report, or record.

(c) You must keep each record on site for at least 2 years after the date of each occurrence, measurement, maintenance, corrective action, report, or record, according to §63.10(b)(1). You can keep the records offsite for the remaining 3 years.

Other Requirements and Information

§63.7350 What parts of the General Provisions apply to me?

Table 1 to this subpart shows which parts of the General Provisions in §§63.1 through 63.15 apply to you.

§63.7351 Who implements and enforces this subpart?

(a) This subpart can be implemented and enforced by us, the United States Environmental Protection Agency (U.S. EPA), or a delegated authority such as your State, local, or tribal agency. If the U.S. EPA Administrator has delegated authority to your State, local, or tribal agency, then that agency has the authority to implement and enforce this subpart. You should contact your U.S. EPA Regional Office to find out if this subpart is delegated to your State, local, or tribal agency.

(b) In delegating implementation and enforcement authority of this subpart to a State, local, or tribal agency under subpart E of this part, the authorities contained in paragraph (c) of this section are retained by the Administrator of the U.S. EPA and are not transferred to the State, local, or tribal agency.

(c) The authorities in paragraphs (c)(1) through (6) of this section will not be delegated to State, local, or tribal agencies.

(1) Approval of alternatives to work practice standards for fugitive pushing emissions in §63.7291(a) for a by-product coke oven battery with vertical flues, fugitive pushing emissions in §63.7292(a) for a by-product coke oven battery with horizontal flues, fugitive pushing emissions in §63.7293 for a non-recovery coke oven battery, soaking for a by-product coke oven battery in §63.7294(a), and quenching for a coke oven battery in §63.7295(b) under §63.6(g).

(2) Approval of alternative opacity emission limitations for a by-product coke oven battery under §63.6(h)(9).

(3) Approval of major alternatives to test methods under §63.7(e)(2)(ii) and (f) and as defined in §63.90, except for alternative procedures in §63.7334(a)(7).

(4) Approval of major alternatives to monitoring under §63.8(f) and as defined in §63.90.

(5) Approval of major alternatives to recordkeeping and reporting under §63.10(f) and as defined in §63.90.

(6) Approval of the work practice plan for by-product coke oven batteries with horizontal flues submitted under §63.7292(a)(1).

§63.7352 What definitions apply to this subpart?

Terms used in this subpart are defined in the Clean Air Act (CAA), in §63.2, and in this section as follows:

Acceptable makeup water means surface water from a river, lake, or stream; water meeting drinking water standards; storm water runoff and production area clean up water except for water from the by-product recovery plant area; process wastewater treated to meet effluent limitations guidelines in 40 CFR part 420; water from any of these sources that has been used only for non-contact cooling or in water seals; or water from scrubbers used to control pushing emissions.

Backup quench station means a quenching device that is used for less than 5 percent of the quenches from any single coke oven battery in the 12-month period from July 1 to June 30.

Baffles means an apparatus comprised of obstructions for checking or deflecting the flow of gases. Baffles are installed in a quench tower to remove droplets of water and particles from the rising vapors by providing a point of impact. Baffles may be installed either inside or on top of quench towers and are typically constructed of treated wood, steel, or plastic.

Battery stack means the stack that is the point of discharge to the atmosphere of the combustion gases from a battery's underfiring system.

Batterywide extended coking means increasing the average coking time for all ovens in the coke oven battery by 25 percent or more over the manufacturer's specified design rate.

By-product coke oven battery means a group of ovens connected by common walls, where coal undergoes destructive distillation under positive pressure to produce coke and coke oven gas from which by-products are recovered.

By-product recovery plant area means that area of the coke plant where process units subject to subpart L in part 61 are located.

Coke oven battery means a group of ovens connected by common walls, where coal undergoes destructive distillation to produce coke. A coke oven battery includes by-product and non-recovery processes.

Coke plant means a facility that produces coke from coal in either a by-product coke oven battery or a non-recovery coke oven battery.

Cokeside shed means a structure used to capture pushing emissions that encloses the cokeside of the battery and ventilates the emissions to a control device.

Coking time means the time interval that starts when an oven is charged with coal and ends when the oven is pushed.

Deviation means any instance in which an affected source subject to this subpart, or an owner or operator of such a source:

(1) Fails to meet any requirement or obligation established by this subpart including, but not limited to, any emission limitation (including operating limits) or work practice standard;

(2) Fails to meet any term or condition that is adopted to implement an applicable requirement in this subpart and that is included in the operating permit for any affected source required to obtain such a permit; or

(3) Fails to meet any emission limitation or work practice standard in this subpart during startup, shutdown, or malfunction, regardless of whether or not such failure is permitted by this subpart.

Emission limitation means any emission limit, opacity limit, or operating limit.

Four consecutive pushes means four pushes observed successively.

Fugitive pushing emissions means emissions from pushing that are not collected by a capture system.

Horizontal flue means a type of coke oven heating system used on Semet-Solvay batteries where the heating flues run horizontally from one end of the oven to the other end, and the flues are not shared with adjacent ovens.

Hot water scrubber means a mobile scrubber used to control pushing emissions through the creation of an induced draft formed by the expansion of pressurized hot water through a nozzle.

Increased coking time means increasing the charge-to-push time for an individual oven.

Non-recovery coke oven battery means a group of ovens connected by common walls and operated as a unit, where coal undergoes destructive distillation under negative pressure to produce coke, and which is designed for the combustion of the coke oven gas from which by-products are not recovered.

Oven means a chamber in the coke oven battery in which coal undergoes destructive distillation to produce coke.

Pushing means the process of removing the coke from the oven. Pushing begins with the first detectable movement of the coke mass and ends when the quench car enters the quench tower.

Quenching means the wet process of cooling (wet quenching) the hot incandescent coke by direct contact with water that begins when the quench car enters the quench tower and ends when the quench car exits the quench tower.

Quench tower means the structure in which hot incandescent coke in the quench car is deluged or quenched with water.

Remove from service means that an oven is not charged with coal and is not used for coking. When removed from service, the oven may remain at the operating temperature or it may be cooled down for repairs.

Responsible official means responsible official as defined in §63.2.

Short battery means a by-product coke oven battery with ovens less than five meters in height.

Soaking means that period in the coking cycle that starts when an oven is dampered off the collecting main and vented to the atmosphere through an open standpipe prior to pushing and ends when the coke begins to be pushed from the oven.

Soaking emissions means the discharge from an open standpipe during soaking of visible emissions due to either incomplete coking or leakage into the standpipe from the collecting main.

Standpipe means an apparatus on the oven that provides a passage for gases from an oven to the atmosphere when the oven is dampered off the collecting main and the standpipe cap is opened. This includes mini-standpipes that are not connected to the collecting main.

Tall battery means a by-product coke oven battery with ovens five meters or more in height.

Vertical flue means a type of coke oven heating system in which the heating flues run vertically from the bottom to the top of the oven, and flues are shared between adjacent ovens.

Work practice standard means any design, equipment, work practice, or operational standard, or combination thereof, that is promulgated pursuant to section 112(h) of the CAA.

Table 1 to Subpart CCCCC of Part 63—Applicability of General Provisions to Subpart CCCCC

As required in §63.7350, you must comply with each applicable requirement of the NESHAP General Provisions (40 CFR part 63, subpart A) as shown in the following table:

Citation	Subject	Applies to Subpart CCCCC?	Explanation
§63.1	Applicability	Yes	
§63.2	Definitions	Yes	
§63.3	Units and Abbreviations	Yes	
§63.4	Prohibited Activities	Yes	
§63.5	Construction/Reconstruction	Yes	
§63.6(a), (b), (c), (d), (e), (f), (g), (h)(2)-(8)	Compliance with Standards and Maintenance Requirements	Yes	
§63.6(h)(9)	Adjustment to an Opacity Emission Standard	Yes	

Citation	Subject	Applies to Subpart CCCCC?	Explanation
§63.7(a)(3), (b), (c)-(h)	Performance Testing Requirements	Yes	
§63.7(a)(1)-(2)	Applicability and Performance Test Dates	No	Subpart CCCCC specifies applicability and dates.
§63.8(a)(1)-(3), (b), (c)(1)-(3), (c)(4)(i)-(ii), (c)(5)-(8), (d), (e), (f)(1)-(5), (g)(1)-(4)	Monitoring Requirements	Yes	CMS requirements in §63.8(c)(4)(i)-(ii), (c)(5), and (c)(6) apply only to COMS for battery stacks.
§63.8(a)(4)	Additional Monitoring Requirements for Control Devices in §63.11	No	Flares are not a control device for Subpart CCCCC affected sources.
§63.8(c)(4)	Continuous Monitoring System (CMS) Requirements	No	Subpart CCCCC specifies requirements for operation of CMS.
§63.8(e)(4)-(5)	Performance Evaluations	Yes	Except COMS performance evaluation must be conducted before the compliance date.
§63.8(f)(6)	RATA Alternative	No	Subpart CCCCC does not require CEMS.
§63.8(g)(5)	Data Reduction	No	Subpart CCCCC specifies data that can't be used in computing averages for COMS.
§63.9	Notification Requirements	Yes	Additional notifications for CMS in §63.9(g) apply only to COMS for battery stacks.
§63.10(a), (b)(1)-(b)(2)(xii), (b)(2)(xiv), (b)(3), (c)(1)-(6), (c)(9)-(15), (d), (e)(1)-(2), (e)(4), (f)	Recordkeeping and Reporting Requirements	Yes.	Additional records for CMS in §63.10(c)(1)-(6), (9)-(15), and reports in §63.10(d)(1)-(2) apply only to COMS for battery stacks.
§63.10(b)(2) (xi)-(xii)	CMS Records for RATA Alternative	No	Subpart CCCCC doesn't require CEMS.
§63.10(c)(7)-(8)	Records of Excess Emissions and Parameter Monitoring Exceedances for CMS	No	Subpart CCCCC specifies record requirements.
§63.10(e)(3)	Excess Emission Reports	No	Subpart CCCCC specifies reporting requirements.
§63.11	Control Device Requirements	No	Subpart CCCCC does not require flares.
§63.12	State Authority and Delegations.	Yes	
§§63.13-63.15	Addresses, Incorporation by Reference, Availability of Information	Yes	

Attachment J
To Part 70 Operating Permit Renewal No. T089-29907-00121

[Downloaded from the eCFR on August 21, 2013]

Electronic Code of Federal Regulations

Title 40: Protection of Environment

40 CFR 63, Subpart FFFFF—National Emission Standards for Hazardous Air Pollutants for Integrated Iron and Steel Manufacturing Facilities

Source: 68 FR 27663, May 20, 2003, unless otherwise noted.

What This Subpart Covers

§ 63.7780 What is the purpose of this subpart?

This subpart establishes national emission standards for hazardous air pollutants (NESHAP) for integrated iron and steel manufacturing facilities. This subpart also establishes requirements to demonstrate initial and continuous compliance with all applicable emission limitations and operation and maintenance requirements in this subpart.

§ 63.7781 Am I subject to this subpart?

You are subject to this subpart if you own or operate an integrated iron and steel manufacturing facility that is (or is part of) a major source of hazardous air pollutants (HAP) emissions. Your integrated iron and steel manufacturing facility is a major source of HAP if it emits or has the potential to emit any single HAP at a rate of 10 tons or more per year or any combination of HAP at a rate of 25 tons or more per year.

§ 63.7782 What parts of my plant does this subpart cover?

(a) This subpart applies to each new and existing affected source at your integrated iron and steel manufacturing facility.

(b) The affected sources are each new or existing sinter plant, blast furnace, and basic oxygen process furnace (BOPF) shop at your integrated iron and steel manufacturing facility.

(c) This subpart covers emissions from the sinter plant windbox exhaust, discharge end, and sinter cooler; the blast furnace casthouse; and the BOPF shop including each individual BOPF and shop ancillary operations (hot metal transfer, hot metal desulfurization, slag skimming, and ladle metallurgy).

(d) A sinter plant, blast furnace, or BOPF shop at your integrated iron and steel manufacturing facility is existing if you commenced construction or reconstruction of the affected source before July 13, 2001.

(e) A sinter plant, blast furnace, or BOPF shop at your integrated iron and steel manufacturing facility is new if you commence construction or reconstruction of the affected source on or after July 13, 2001. An affected source is reconstructed if it meets the definition of reconstruction in § 63.2.

§ 63.7783 When do I have to comply with this subpart?

(a) If you have an existing affected source, you must comply with each emission limitation and operation and maintenance requirement in this subpart that applies to you by the dates specified in paragraphs (a)(1) and (2) of this section.

(1) No later than May 22, 2006 for all emissions sources at an existing affected source except for a sinter cooler at an existing sinter plant.

(2) No later than January 13, 2007 for a sinter cooler at an existing sinter plant.

(b) If you have a new affected source and its initial startup date is on or before May 20, 2003, then you must comply with each emission limitation and operation and maintenance requirement in this subpart that applies to you by May 20, 2003.

(c) If you have a new affected source and its initial startup date is after May 20, 2003, you must comply with each emission limitation and operation and maintenance requirement in this subpart that applies to you upon initial startup.

(d) If your integrated iron and steel manufacturing facility is not a major source and becomes a major source of HAP, the following compliance dates apply to you.

(1) Any portion of the existing integrated iron and steel manufacturing facility that becomes a new affected source or a new reconstructed source must be in compliance with this subpart upon startup.

(2) All other parts of the integrated iron and steel manufacturing facility must be in compliance with this subpart no later than 2 years after it becomes a major source.

(e) You must meet the notification and schedule requirements in § 63.7840. Several of these notifications must be submitted before the compliance date for your affected source.

[68 FR 27663, May 20, 2003, as amended at 71 FR 39585, July 13, 2006]

Emission Limitations

§ 63.7790 What emission limitations must I meet?

(a) You must meet each emission limit and opacity limit in Table 1 to this subpart that applies to you.

(b) You must meet each operating limit for capture systems and control devices in paragraphs (b)(1) through (3) of this section that applies to you.

(1) You must operate each capture system applied to emissions from a sinter plant discharge end or blast furnace casthouse or to secondary emissions from a BOPF at or above the lowest value or settings established for the operating limits in your operation and maintenance plan;

(2) For each venturi scrubber applied to meet any particulate emission limit in Table 1 to this subpart, you must maintain the hourly average pressure drop and scrubber water flow rate at or above the minimum levels established during the initial performance test.

(3) For each electrostatic precipitator applied to emissions from a BOPF, you must maintain the hourly average opacity of emissions exiting the control device at or below 10 percent.

(c) An owner or operator who uses an air pollution control device other than a baghouse, venturi scrubber, or electrostatic precipitator must submit a description of the device; test results collected in accordance with § 63.7822 verifying the performance of the device for reducing emissions of particulate matter to the atmosphere to the levels required by this subpart; a copy of the operation and maintenance plan required in § 63.7800(b); and appropriate operating parameters that will be monitored to maintain continuous compliance with the applicable emission limitation(s). The monitoring plan identifying the operating parameters to be monitored is subject to approval by the Administrator.

(d) For each sinter plant, you must either:

(1) Maintain the 30-day rolling average oil content of the feedstock at or below 0.02 percent; or

(2) Maintain the 30-day rolling average of volatile organic compound emissions from the windbox exhaust stream at or below 0.2 lb/ton of sinter.

[68 FR 27663, May 20, 2003, as amended at 71 FR 39585, July 13, 2006]

Operation and Maintenance Requirements

§ 63.7800 What are my operation and maintenance requirements?

(a) As required by § 63.6(e)(1)(i), you must always operate and maintain your affected source, including air pollution control and monitoring equipment, in a manner consistent with good air pollution control practices for minimizing emissions at least to the levels required by this subpart.

(b) You must prepare and operate at all times according to a written operation and maintenance plan for each capture system or control device subject to an operating limit in § 63.7790(b). Each plan must address the elements in paragraphs (b)(1) through (7) of this section.

(1) Monthly inspections of the equipment that is important to the performance of the total capture system (*e.g.,* pressure sensors, dampers, and damper switches). This inspection must include observations of the physical appearance of the equipment (*e.g.,* presence of holes in ductwork or hoods, flow constrictions caused by dents or accumulated dust in the ductwork, and fan erosion). The operation and maintenance plan also must include requirements to repair any defect or deficiency in the capture system before the next scheduled inspection.

(2) Preventative maintenance for each control device, including a preventative maintenance schedule that is consistent with the manufacturer's instructions for routine and long-term maintenance.

(3) Operating limits for each capture system applied to emissions from a sinter plant discharge end or blast furnace casthouse, or to secondary emissions from a BOPF. You must establish the operating limits according to the requirements in paragraphs (b)(3)(i) through (iii) of this section.

(i) Select operating limit parameters appropriate for the capture system design that are representative and reliable indicators of the performance of the capture system. At a minimum, you must use appropriate operating limit parameters that indicate the level of the ventilation draft and the damper position settings for the capture system when operating to collect emissions, including revised settings for seasonal variations. Appropriate operating limit parameters for ventilation draft include, but are not limited to, volumetric flow rate through each separately ducted hood, total volumetric flow rate at the inlet to the control device to which the capture system is vented, fan motor amperage, or static pressure.

(ii) For each operating limit parameter selected in paragraph (b)(3)(i) of this section, designate the value or setting for the parameter at which the capture system operates during the process operation. If your operation allows for more than one process to be operating simultaneously, designate the value or setting for the parameter at which the capture system operates during each possible configuration that you may operate.

(iii) Include documentation in your plan to support your selection of the operating limits established for the capture system. This documentation must include a description of the capture system design, a description of the capture system operating during production, a description of each selected operating limit parameter, a rationale for why you chose the parameter, a description of the method used to monitor the parameter according to the requirements of § 63.7830(a), and the data used to set the value or setting for the parameter for each of your process configurations.

(4) Corrective action procedures for baghouses equipped with bag leak detection systems or continuous opacity monitoring systems (COMS). In the event a bag leak detection system alarm is triggered or emissions from a baghouse equipped with a COMS exceed an hourly average opacity of 5 percent, you must initiate corrective action to determine the cause of the alarm within 1 hour of the alarm, initiate corrective action to correct the cause of the problem within 24 hours of the alarm, and complete the corrective action as soon as practicable. Corrective actions may include, but are not limited to:

(i) Inspecting the baghouse for air leaks, torn or broken bags or filter media, or any other condition that may cause an increase in emissions.

(ii) Sealing off defective bags or filter media.

(iii) Replacing defective bags or filter media or otherwise repairing the control device.

(iv) Sealing off a defective baghouse compartment.

(v) Cleaning the bag leak detection system probe, or otherwise repair the bag leak detection system.

(vi) Shutting down the process producing the particulate emissions.

(5) Corrective action procedures for venturi scrubbers equipped with continuous parameter monitoring systems (CPMS). In the event a venturi scrubber exceeds the operating limit in § 63.7790(b)(2), you must take corrective actions consistent with your site-specific monitoring plan in accordance with § 63.7831(a).

(6) Corrective action procedures for electrostatic precipitators equipped with COMS. In the event an electrostatic precipitator exceeds the operating limit in § 63.7790(b)(3), you must take corrective actions consistent with your site-specific monitoring plan in accordance with § 63.7831(a).

(7) Procedures for determining and recording the daily sinter plant production rate in tons per hour.

[68 FR 27663, May 20, 2003, as amended at 71 FR 39585, July 13, 2006]

General Compliance Requirements

§ 63.7810 What are my general requirements for complying with this subpart?

(a) You must be in compliance with the emission limitations and operation and maintenance requirements in this subpart at all times, except during periods of startup, shutdown, and malfunction as defined in § 63.2.

(b) During the period between the compliance date specified for your affected source in § 63.7783 and the date upon which continuous monitoring systems have been installed and certified and any applicable operating limits have been set, you must maintain a log detailing the operation and maintenance of the process and emissions control equipment.

(c) You must develop a written startup, shutdown, and malfunction plan according to the provisions in § 63.6(e)(3).

[68 FR 27663, May 20, 2003, as amended at 71 FR 20468, Apr. 20, 2006]

Initial Compliance Requirements

§ 63.7820 By what date must I conduct performance tests or other initial compliance demonstrations?

(a) You must conduct a performance test to demonstrate initial compliance with each emission and opacity limit in Table 1 to this subpart that applies to you. You must also conduct a performance test to demonstrate initial compliance with the 30-day rolling average operating limit for the oil content of the sinter plant feedstock in § 63.7790(d)(1) or alternative limit for volatile organic compound emissions from the sinter plant windbox exhaust stream in § 63.7790(d)(2). You must conduct the performance tests within 180 calendar days after the compliance date that is specified in § 63.7783 for your affected source and report the results in your notification of compliance status.

(b) For each operation and maintenance requirement that applies to you where initial compliance is not demonstrated using a performance test or opacity observation, you must demonstrate initial compliance within 30 calendar days after the compliance date that is specified for your affected source in § 63.7783.

(c) If you commenced construction or reconstruction between July 13, 2001 and May 20, 2003, you must demonstrate initial compliance with either the proposed emission limit or the promulgated emission limit no later than November 17, 2003 or no later than 180 days after startup of the source, whichever is later, according to § 63.7(a)(2)(ix).

(d) If you commenced construction or reconstruction between July 13, 2001 and May 20, 2003, and you chose to comply with the proposed emission limit when demonstrating initial compliance, you must conduct a second performance test to demonstrate compliance with the promulgated emission limit by November 17, 2006, or no later than 180 days after startup of the source, whichever is later, according to § 63.7(a)(2)(ix).

§ 63.7821 When must I conduct subsequent performance tests?

(a) You must conduct subsequent performance tests to demonstrate compliance with all applicable PM and opacity limits in Table 1 to this subpart at the frequencies specified in paragraphs (b) through (d) of this section.

(b) For each sinter cooler at an existing sinter plant and each emissions unit equipped with a control device other than a baghouse, you must conduct subsequent performance tests no less frequently than twice (at mid-term and renewal) during each term of your title V operating permit.

(c) For each emissions unit equipped with a baghouse, you must conduct subsequent performance tests no less frequently than once during each term of your title V operating permit.

(d) For sources without a title V operating permit, you must conduct subsequent performance tests every 2.5 years.

[71 FR 39586, July 13, 2006]

§ 63.7822 What test methods and other procedures must I use to demonstrate initial compliance with the emission limits for particulate matter?

(a) You must conduct each performance test that applies to your affected source according to the requirements in § 63.7(e)(1) and the conditions detailed in paragraphs (b) through (i) of this section.

(b) To determine compliance with the applicable emission limit for particulate matter in Table 1 to this subpart, follow the test methods and procedures in paragraphs (b)(1) and (2) of this section.

(1) Determine the concentration of particulate matter according to the following test methods in appendix A to part 60 of this chapter:

(i) Method 1 to select sampling port locations and the number of traverse points. Sampling ports must be located at the outlet of the control device and prior to any releases to the atmosphere.

(ii) Method 2, 2F, or 2G to determine the volumetric flow rate of the stack gas.

(iii) Method 3, 3A, or 3B to determine the dry molecular weight of the stack gas.

(iv) Method 4 to determine the moisture content of the stack gas.

(v) Method 5, 5D, or 17, as applicable, to determine the concentration of particulate matter (front half filterable catch only).

(2) Collect a minimum sample volume of 60 dry standard cubic feet (dscf) of gas during each particulate matter test run. Three valid test runs are needed to comprise a performance test.

(c) For each sinter plant windbox exhaust stream, you must complete the requirements of paragraphs (c)(1) and (2) of this section:

(1) Follow the procedures in your operation and maintenance plan for measuring and recording the sinter production rate for each test run in tons per hour; and

(2) Compute the process-weighted mass emissions (E_p) for each test run using Equation 1 of this section as follows:

$$E_p = \frac{C \times Q}{P \times K} \qquad \text{(Eq. 1)}$$

Where:

E_p = Process-weighted mass emissions of particulate matter, lb/ton;

C = Concentration of particulate matter, grains per dry standard cubic foot (gr/dscf);

Q = Volumetric flow rate of stack gas, dry standard cubic foot per hour (dscf/hr);

P = Production rate of sinter during the test run, tons/hr; and

K = Conversion factor, 7,000 grains per pound (gr/lb).

(d) If you apply two or more control devices in parallel to emissions from a sinter plant discharge end or a BOPF, compute the average flow-weighted concentration for each test run using Equation 2 of this section as follows:

$$C_W = \frac{\sum_{i=1}^{n} C_i Q_i}{\sum_{i=1}^{n} Q_i} \qquad \text{(Eq. 2)}$$

Where:

C_w = Flow-weighted concentration, gr/dscf;

C_i = Concentration of particulate matter from exhaust stream “i”, gr/dscf; and

Q_i = Volumetric flow rate of effluent gas from exhaust stream “i”, dry standard cubic foot per minute (dscfm).

(e) For a control device applied to emissions from a blast furnace casthouse, sample for an integral number of furnace tapping operations sufficient to obtain at least 1 hour of sampling for each test run.

(f) For a primary emission control device applied to emissions from a BOPF with a closed hood system, sample only during the primary oxygen blow and do not sample during any subsequent reblows. Continue sampling for each run for an integral number of primary oxygen blows.

(g) For a primary emission control system applied to emissions from a BOPF with an open hood system and for a control device applied solely to secondary emissions from a BOPF, you must complete the requirements of paragraphs (g)(1) and (2) of this section:

(1) Sample only during the steel production cycle. Conduct sampling under conditions that are representative of normal operation. Record the start and end time of each steel production cycle and each period of abnormal operation; and

(2) Sample for an integral number of steel production cycles. The steel production cycle begins when the scrap is charged to the furnace and ends 3 minutes after the slag is emptied from the vessel into the slag pot.

(h) For a control device applied to emissions from BOPF shop ancillary operations (hot metal transfer, skimming, desulfurization, or ladle metallurgy), sample only when the operation(s) is being conducted.

(i) Subject to approval by the permitting authority, you may conduct representative sampling of stacks when there are more than three stacks associated with a process.

§ 63.7823 What test methods and other procedures must I use to demonstrate initial compliance with the opacity limits?

(a) You must conduct each performance test that applies to your affected source according to the requirements in § 63.7(h)(5) and the conditions detailed in paragraphs (b) through (d) of this section.

(b) You must conduct each visible emissions performance test such that the opacity observations overlap with the performance test for particulate matter.

(c) To determine compliance with the applicable opacity limit in Table 1 to this subpart for a sinter plant discharge end or a blast furnace casthouse:

(1) Using a certified observer, determine the opacity of emissions according to Method 9 in appendix A to part 60 of this chapter.

(2) Obtain a minimum of 30 6-minute block averages. For a blast furnace casthouse, make observations during tapping of the furnace. Tapping begins when the furnace is opened, usually by creating a hole near the bottom of the furnace, and ends when the hole is plugged.

(d) To determine compliance with the applicable opacity limit in Table 1 to this subpart for BOPF shops:

(1) For an existing BOPF shop:

(i) Using a certified observer, determine the opacity of emissions according to Method 9 in appendix A to part 60 of this chapter except as specified in paragraphs (d)(1)(ii) and (iii) of this section.

(ii) Instead of procedures in section 2.4 of Method 9 in appendix A to part 60 of this chapter, record observations to the nearest 5 percent at 15-second intervals for at least three steel production cycles.

(iii) Instead of procedures in section 2.5 of Method 9 in appendix A to part 60 of this chapter, determine the 3-minute block average opacity from the average of 12 consecutive observations recorded at 15-second intervals.

(2) For a new BOPF shop housing a bottom-blown BOPF:

(i) Using a certified observer, determine the opacity of emissions according to Method 9 in appendix A to part 60 of this chapter.

(ii) Determine the highest and second highest sets of 6-minute block average opacities for each steel production cycle.

(3) For a new BOPF shop housing a top-blown BOPF:

(i) Determine the opacity of emissions according to the requirements for an existing BOPF shop in paragraphs (d)(1)(i) through (iii) of this section.

(ii) Determine the highest and second highest sets of 3-minute block average opacities for each steel production cycle.

(4) Opacity observations must cover the entire steel production cycle and must be made for at least three cycles. The steel production cycle begins when the scrap is charged to the furnace and ends 3 minutes after the slag is emptied from the vessel into the slag pot.

(5) Determine and record the starting and stopping times of the steel production cycle.

(e) To determine compliance with the applicable opacity limit in Table 1 to this subpart for a sinter cooler at an existing sinter plant:

(1) Using a certified observer, determine the opacity of emissions according to Method 9 in appendix A to part 60 of this chapter.

(2) Obtain a minimum of 30 6-minute block averages.

(3) Make visible emission observations of uncovered portions of sinter plant coolers with the observer's line of sight generally in the direction of the center of the cooler.

[68 FR 27663, May 20, 2003, as amended at 71 FR 39586, July 13, 2006]

§ 63.7824 What test methods and other procedures must I use to establish and demonstrate initial compliance with operating limits?

(a) For each capture system subject to an operating limit in § 63.7790(b)(1), you must certify that the system operated during the performance test at the site-specific operating limits established in your operation and maintenance plan using the procedures in paragraphs (a)(1) through (4) of this section.

(1) Concurrent with all opacity observations, measure and record values for each of the operating limit parameters in your capture system operation and maintenance plan according to the monitoring requirements specified in § 63.7830(a).

(2) For any dampers that are manually set and remain at the same position at all times the capture system is operating, the damper position must be visually checked and recorded at the beginning and end of each opacity observation period segment.

(3) Review and record the monitoring data. Identify and explain any times the capture system operated outside the applicable operating limits.

(4) Certify in your performance test report that during all observation period segments, the capture system was operating at the values or settings established in your capture system operation and maintenance plan.

(b) For a venturi scrubber subject to operating limits for pressure drop and scrubber water flow rate in § 63.7790(b)(2), you must establish site-specific operating limits according to the procedures in paragraphs (b)(1) and (2) of this section. You may establish the parametric monitoring limit during the initial performance test or during any other performance test run that meets the emission limit.

(1) Using the CPMS required in § 63.7830(c), measure and record the pressure drop and scrubber water flow rate during each run of the particulate matter performance test.

(2) Compute and record the hourly average pressure drop and scrubber water flow rate for each individual test run. Your operating limits are the lowest average pressure drop and scrubber water flow rate value in any of the three runs that meet the applicable emission limit.

(c) You may change the operating limits for a capture system or venturi scrubber if you meet the requirements in paragraphs (c)(1) through (3) of this section.

(1) Submit a written notification to the Administrator of your request to conduct a new performance test to revise the operating limit.

(2) Conduct a performance test to demonstrate compliance with the applicable emission limitation in Table 1 to this subpart.

(3) Establish revised operating limits according to the applicable procedures in paragraphs (a) and (b) of this section for a control device or capture system.

(d) For each sinter plant subject to the operating limit for the oil content of the sinter plant feedstock in § 63.7790(d)(1), you must demonstrate initial compliance according to the procedures in paragraphs (d)(1) through (3) of this section.

(1) Sample the feedstock at least three times a day (once every 8 hours), composite the three samples each day, and analyze the composited samples using Method 9071B, “n-Hexane Extractable Material(HEM) for Sludge, Sediment, and Solid Samples,” (Revision 2, April 1998). Method 9071B is incorporated by reference (see § 63.14) and is published in EPA Publication SW-846 “Test Methods for Evaluating Solid Waste, Physical/Chemical Methods.” Record the sampling date and time, oil content values, and sinter produced (tons/day).

(2) Continue the sampling and analysis procedure for 30 consecutive days.

(3) Each day, compute and record the 30-day rolling average using that day's value and the 29 previous daily values.

(e) To demonstrate initial compliance with the alternative operating limit for volatile organic compound emissions from the sinter plant windbox exhaust stream in § 63.7790(d)(2), follow the test methods and procedures in paragraphs (e)(1) through (5) of this section.

(1) Determine the volatile organic compound emissions according to the following test methods in appendix A to part 60 of this chapter:

(i) Method 1 to select sampling port locations and the number of traverse points. Sampling ports must be located at the outlet of the control device and prior to any releases to the atmosphere.

(ii) Method 2, 2F, or 2G to determine the volumetric flow rate of the stack gas.

(iii) Method 3, 3A, or 3B to determine the dry molecular weight of the stack gas.

(iv) Method 4 to determine the moisture content of the stack gas.

(v) Method 25 to determine the mass concentration of volatile organic compound emissions (total gaseous nonmethane organics as carbon) from the sinter plant windbox exhaust stream stack.

(2) Determine volatile organic compound (VOC) emissions every 24 hours (from at least three samples taken at 8-hour intervals) using Method 25 in 40 CFR part 60, appendix A. Record the sampling date and time, sampling results, and sinter produced (tons/day).

(3) Compute the process-weighted mass emissions (E_v) each day using Equation 1 of this section as follows:

$$E_v = \frac{M_c \times Q}{35.31 \times 454,000 \times K} \qquad \text{(Eq. 1)}$$

Where:

E_v = Process-weighted mass emissions of volatile organic compounds, lb/ton;

M_c = Average concentration of total gaseous nonmethane organics as carbon by Method 25 (40 CFR part 60, appendix A), milligrams per dry standard cubic meters (mg/dscm) for each day;

Q = Volumetric flow rate of stack gas, dscf/hr;

35.31 = Conversion factor (dscf/dscm);

454,000 = Conversion factor (mg/lb); and

K = Daily production rate of sinter, tons/hr.

(4) Continue the sampling and analysis procedures in paragraphs (e)(1) through (3) of this section for 30 consecutive days.

(5) Compute and record the 30-day rolling average of VOC emissions for each operating day.

(f) You may use an alternative test method to determine the oil content of the sinter plant feedstock or the volatile organic compound emissions from the sinter plant windbox exhaust stack if you have already demonstrated the equivalency of the alternative method for a specific plant and have received previous approval from the applicable permitting authority.

[68 FR 27663, May 20, 2003, as amended at 71 FR 39586, July 13, 2006]

§ 63.7825 How do I demonstrate initial compliance with the emission limitations that apply to me?

(a) For each affected source subject to an emission or opacity limit in Table 1 to this subpart, you have demonstrated initial compliance if:

(1) You meet the conditions in Table 2 to this subpart; and

(2) For each capture system subject to the operating limit in § 63.7790(b)(1), you have established appropriate site-specific operating limit(s) and have a record of the operating parameter data measured during the performance test in accordance with § 63.7824(a)(1); and

(3) For each venturi scrubber subject to the operating limits for pressure drop and scrubber water flow rate in § 63.7790(b)(2), you have established appropriate site-specific operating limits and have a record of the pressure drop and scrubber water flow rate measured during the performance test in accordance with § 63.7824(b).

(b) For each existing or new sinter plant subject to the operating limit in § 63.7790(d)(1), you have demonstrated initial compliance if the 30-day rolling average of the oil content of the feedstock, measured during the initial performance test in accordance with § 63.7824(d) is no more than 0.02 percent. For each existing or new sinter plant subject to the alternative operating limit in § 63.7790(d)(2), you have demonstrated initial compliance if the 30-day rolling average of the volatile organic compound emissions from the sinter plant windbox exhaust stream, measured during the initial performance test in accordance with § 63.7824(e) is no more than 0.2 lb/ton of sinter produced.

(c) For each emission limitation that applies to you, you must submit a notification of compliance status according to § 63.7840(e).

[68 FR 27663, May 20, 2003, as amended at 71 FR 39586, July 13, 2006]

§ 63.7826 How do I demonstrate initial compliance with the operation and maintenance requirements that apply to me?

(a) For a capture system applied to emissions from a sinter plant discharge end or blast furnace casthouse or to secondary emissions from a BOPF, you have demonstrated initial compliance if you meet all of the conditions in paragraphs (a)(1) through (4) of this section.

(1) Prepared the capture system operation and maintenance plan according to the requirements of § 63.7800(b), including monthly inspection procedures and detailed descriptions of the operating parameter(s) selected to monitor the capture system;

(2) Certified in your performance test report that the system operated during the test at the operating limits established in your operation and maintenance plan;

(3) Submitted a notification of compliance status according to the requirements in § 63.7840(e), including a copy of the capture system operation and maintenance plan and your certification that you will operate the capture system at the values or settings established for the operating limits in that plan; and

(4) Prepared a site-specific monitoring plan according to the requirements in § 63.7831(a).

(b) For each control device subject to operating limits in § 63.7790(b)(2) or (3), you have demonstrated initial compliance if you meet all the conditions in paragraphs (b)(1) through (3) of this section.

(1) Prepared the control device operation and maintenance plan according to the requirements of § 63.7800(b), including a preventative maintenance schedule and, as applicable, detailed descriptions of the corrective action procedures for baghouses and other control devices;

(2) Submitted a notification of compliance status according to the requirements in § 63.7840(e), including a copy of the operation and maintenance plan; and

(3) Prepared a site-specific monitoring plan according to the requirements in § 63.7831(a).

[68 FR 27663, May 20, 2003, as amended at 71 FR 39586, July 13, 2006]

Continuous Compliance Requirements

§ 63.7830 What are my monitoring requirements?

(a) For each capture system subject to an operating limit in § 63.7790(b)(1) established in your capture system operation and maintenance plan, you must install, operate, and maintain a CPMS according to the requirements in § 63.7831(e) and the requirements in paragraphs (a)(1) through (3) of this section.

(1) Dampers that are manually set and remain in the same position are exempt from the requirement to install and operate a CPMS. If dampers are not manually set and remain in the same position, you must make a visual check at least once every 24 hours to verify that each damper for the capture system is in the same position as during the initial performance test.

(2) If you use a flow measurement device to monitor the operating limit parameter for a sinter plant discharge end or blast furnace casthouse, you must monitor the hourly average rate (*e.g.,* the hourly average actual volumetric flow rate through each separately ducted hood, the average hourly total volumetric flow rate at the inlet to the control device) according to the requirements in § 63.7832.

(3) If you use a flow measurement device to monitor the operating limit parameter for a capture system applied to secondary emissions from a BOPF, you must monitor the average rate for each steel production cycle (*e.g.,* the average actual volumetric flow rate through each separately ducted hood for each steel production cycle, the average

total volumetric flow rate at the inlet to the control device for each steel production cycle) according to the requirements in § 63.7832.

(b) Except as provided in paragraph (b)(3) of this section, you must meet the requirements in paragraph (b)(1) or (2) of this section for each baghouse applied to meet any particulate emission limit in Table 1 to this subpart. You must conduct inspections of each baghouse according to the requirements in paragraph (b)(4) of this section.

(1) Install, operate, and maintain a bag leak detection system according to § 63.7831(f) and monitor the relative change in particulate matter loadings according to the requirements in § 63.7832; or

(2) If you do not install and operate a bag leak detection system, you must install, operate, and maintain a COMS according to the requirements in § 63.7831(h) and monitor the hourly average opacity of emissions exiting each control device stack according to the requirements in § 63.7832.

(3) A bag leak detection system and COMS are not required for a baghouse that meets the requirements in paragraphs (b)(3)(i) and (ii) of this section.

(i) The baghouse is a positive pressure baghouse and is not equipped with exhaust gas stacks; and

(ii) The baghouse was installed before August 30, 2005.

(4) You must conduct inspections of each baghouse at the specified frequencies according to the requirements in paragraphs (b)(4)(i) through (viii) of this section.

(i) Monitor the pressure drop across each baghouse cell each day to ensure pressure drop is within the normal operating range identified in the manual.

(ii) Confirm that dust is being removed from hoppers through weekly visual inspections or other means of ensuring the proper functioning of removal mechanisms.

(iii) Check the compressed air supply for pulse-jet baghouses each day.

(iv) Monitor cleaning cycles to ensure proper operation using an appropriate methodology.

(v) Check bag cleaning mechanisms for proper functioning through monthly visual inspection or equivalent means.

(vi) Make monthly visual checks of bag tension on reverse air and shaker-type baghouses to ensure that bags are not kinked (kneed or bent) or laying on their sides. You do not have to make this check for shaker-type baghouses using self-tensioning (spring-loaded) devices.

(vii) Confirm the physical integrity of the baghouse through quarterly visual inspections of the baghouse interior for air leaks.

(viii) Inspect fans for wear, material buildup, and corrosion through quarterly visual inspections, vibration detectors, or equivalent means.

(c) For each venturi scrubber subject to the operating limits for pressure drop and scrubber water flow rate in § 63.7790(b)(2), you must install, operate, and maintain CPMS according to the requirements in § 63.7831(g) and monitor the hourly average pressure drop and water flow rate according to the requirements in § 63.7832.

(d) For each electrostatic precipitator subject to the opacity operating limit in § 63.7790(b)(3), you must install, operate, and maintain a COMS according to the requirements in § 63.7831(h) and monitor the hourly average opacity of emissions exiting each control device stack according to the requirements in § 63.7832.

(e) For each sinter plant subject to the operating limit in § 63.7790(d), you must either:

(1) Compute and record the 30-day rolling average of the oil content of the feedstock for each operating day using the procedures in § 63.7824(d); or

(2) Compute and record the 30-day rolling average of the volatile organic compound emissions (lbs/ton of sinter) for each operating day using the procedures in § 63.7824(e).

[68 FR 27663, May 20, 2003, as amended at 71 FR 39586, July 13, 2006]

§ 63.7831 What are the installation, operation, and maintenance requirements for my monitors?

(a) For each CPMS required in § 63.7830, you must develop and make available for inspection upon request by the permitting authority a site-specific monitoring plan that addresses the requirements in paragraphs (a)(1) through (8) of this section.

(1) Installation of the CPMS sampling probe or other interface at a measurement location relative to each affected process unit such that the measurement is representative of control of the exhaust emissions (*e.g.,* on or downstream of the last control device);

(2) Performance and equipment specifications for the sample interface, the parametric signal analyzer, and the data collection and reduction system;

(3) Performance evaluation procedures and acceptance criteria (*e.g.,* calibrations);

(4) Ongoing operation and maintenance procedures in accordance with the general requirements of §§ 63.8(c)(1), (c)(3), (c)(4)(ii), (c)(7), and (c)(8);

(5) Ongoing data quality assurance procedures in accordance with the general requirements of § 63.8(d);

(6) Ongoing recordkeeping and reporting procedures in accordance with the general requirements of §§ 63.10(c), (e)(1), and (e)(2)(i);

(7) Corrective action procedures you will follow in the event a venturi scrubber exceeds the operating limit in § 63.7790(b)(2); and

(8) Corrective action procedures you will follow in the event an electrostatic precipitator exceeds the operating limit in § 63.7790(b)(3).

(b) Unless otherwise specified, each CPMS must:

(1) Complete a minimum of one cycle of operation for each successive 15-minute period and collect a minimum of three of the required four data points to constitute a valid hour of data;

(2) Provide valid hourly data for at least 95 percent of every averaging period; and

(3) Determine and record the hourly average of all recorded readings.

(c) You must conduct a performance evaluation of each CPMS in accordance with your site-specific monitoring plan.

(d) You must operate and maintain the CPMS in continuous operation according to the site-specific monitoring plan.

(e) For each capture system subject to an operating limit in § 63.7790(b)(1), you must install, operate, and maintain each CPMS according to the requirements in paragraphs (a) through (d) of this section.

(f) For each baghouse equipped with a bag leak detection system according to § 63.7830(b)(1), you must install, operate, and maintain the bag leak detection system according to the requirements in paragraphs (f)(1) through (7) of this section.

(1) The system must be certified by the manufacturer to be capable of detecting emissions of particulate matter at concentrations of 10 milligrams per actual cubic meter (0.0044 grains per actual cubic foot) or less.

(2) The system must provide output of relative changes in particulate matter loadings.

(3) The system must be equipped with an alarm that will sound when an increase in relative particulate loadings is detected over a preset level. The alarm must be located such that it can be heard by the appropriate plant personnel.

(4) Each system that works based on the triboelectric effect must be installed, operated, and maintained in a manner consistent with the guidance document, “Fabric Filter Bag Leak Detection Guidance,” EPA-454/R-98-015, September 1997. You may install, operate, and maintain other types of bag leak detection systems in a manner consistent with the manufacturer's written specifications and recommendations.

(5) To make the initial adjustment of the system, establish the baseline output by adjusting the sensitivity (range) and the averaging period of the device. Then, establish the alarm set points and the alarm delay time.

(6) Following the initial adjustment, do not adjust the sensitivity or range, averaging period, alarm set points, or alarm delay time, except as detailed in your operation and maintenance plan. Do not increase the sensitivity by more than 100 percent or decrease the sensitivity by more than 50 percent over a 365-day period unless a responsible official certifies, in writing, that the baghouse has been inspected and found to be in good operating condition.

(7) Where multiple detectors are required, the system's instrumentation and alarm may be shared among detectors.

(g) For each venturi scrubber subject to operating limits in § 63.7790(b)(2) for pressure drop and scrubber water flow rate, you must install, operate, and maintain each CPMS according to the requirements in paragraphs (a) through (d) of this section.

(h) For each electrostatic precipitator subject to the opacity operating limit in § 63.7790(b)(3) and each baghouse equipped with a COMS according to § 63.7830(b)(2), you must install, operate, and maintain each COMS according to the requirements in paragraphs (h)(1) through (4) of this section.

(1) You must install, operate, and maintain each COMS according to Performance Specification 1 in 40 CFR part 60, appendix B.

(2) You must conduct a performance evaluation of each COMS according to § 63.8 and Performance Specification 1 in appendix B to 40 CFR part 60.

(3) Each COMS must complete a minimum of one cycle of sampling and analyzing for each successive 10-second period and one cycle of data recording for each successive 6-minute period.

(4) COMS data must be reduced to 6-minute averages as specified in § 63.8(g)(2) and to hourly averages where required by this subpart.

[68 FR 27663, May 20, 2003, as amended at 71 FR 39587, July 13, 2006]

§ 63.7832 How do I monitor and collect data to demonstrate continuous compliance?

(a) Except for monitoring malfunctions, out-of-control periods as specified in § 63.8(c)(7), associated repairs, and required quality assurance or control activities (including as applicable, calibration checks and required zero and span adjustments), you must monitor continuously (or collect data at all required intervals) at all times an affected source is operating.

(b) You may not use data recorded during monitoring malfunctions, associated repairs, and required quality assurance or control activities in data averages and calculations used to report emission or operating levels or to fulfill a minimum data availability requirement, if applicable. You must use all the data collected during all other periods in assessing compliance.

(c) A monitoring malfunction is any sudden, infrequent, not reasonably preventable failure of the monitoring to provide valid data. Monitoring failures that are caused in part by poor maintenance or careless operation are not malfunctions.

§ 63.7833 How do I demonstrate continuous compliance with the emission limitations that apply to me?

(a) You must demonstrate continuous compliance for each affected source subject to an emission or opacity limit in § 63.7790(a) by meeting the requirements in Table 3 to this subpart.

(b) You must demonstrate continuous compliance for each capture system subject to an operating limit in § 63.7790(b)(1) by meeting the requirements in paragraphs (b)(1) and (2) of this section.

(1) Operate the capture system at or above the lowest values or settings established for the operating limits in your operation and maintenance plan; and

(2) Monitor the capture system according to the requirements in § 63.7830(a) and collect, reduce, and record the monitoring data for each of the operating limit parameters according to the applicable requirements of this subpart;

(c) For each baghouse applied to meet any particulate emission limit in Table 1 to this subpart, you must demonstrate continuous compliance by meeting the requirements in paragraph (c)(1) or (2) of this section as applicable, and paragraphs (c)(3) and (4) of this section:

(1) For a baghouse equipped with a bag leak detection system, operating and maintaining each bag leak detection system according to § 63.7831(f) and recording all information needed to document conformance with these requirements. If you increase or decrease the sensitivity of the bag leak detection system beyond the limits specified in § 63.7831(f)(6), you must include a copy of the required written certification by a responsible official in the next semiannual compliance report.

(2) For a baghouse equipped with a COMS, operating and maintaining each COMS and reducing the COMS data according to § 63.7831(h).

(3) Inspecting each baghouse according to the requirements in § 63.7830(b)(4) and maintaining all records needed to document conformance with these requirements.

(4) Maintaining records of the time you initiated corrective action in the event of a bag leak detection system alarm or when the hourly average opacity exceeded 5 percent, the corrective action(s) taken, and the date on which corrective action was completed.

(d) For each venturi scrubber subject to the operating limits for pressure drop and scrubber water flow rate in § 63.7790(b)(2), you must demonstrate continuous compliance by meeting the requirements of paragraphs (d)(1) through (4) of this section:

(1) Maintaining the hourly average pressure drop and scrubber water flow rate at levels no lower than those established during the initial or subsequent performance test;

(2) Operating and maintaining each venturi scrubber CPMS according to § 63.7831(g) and recording all information needed to document conformance with these requirements; and

(3) Collecting and reducing monitoring data for pressure drop and scrubber water flow rate according to § 63.7831(b) and recording all information needed to document conformance with these requirements.

(4) If the hourly average pressure drop or scrubber water flow rate is below the operating limits, you must follow the corrective action procedures in paragraph (g) of this section.

(e) For each electrostatic precipitator subject to the opacity operating limit in § 63.7790(b)(3), you must demonstrate continuous compliance by meeting the requirements of paragraphs (e)(1) through (3) of this section:

(1) Maintaining the hourly average opacity of emissions no higher than 10 percent; and

(2) Operating and maintaining each COMS and reducing the COMS data according to § 63.7831(h).

(3) If the hourly average opacity of emissions exceeds 10 percent, you must follow the corrective action procedures in paragraph (g) of this section.

(f) For each new or existing sinter plant subject to the operating limit in § 63.7790(d), you must demonstrate continuous compliance by either:

(1) For the sinter plant feedstock oil content operating limit in § 63.7790(d)(1),

(i) Computing and recording the 30-day rolling average of the percent oil content for each operating day according to the performance test procedures in § 63.7824(d);

(ii) Recording the sampling date and time, oil content values, and sinter produced (tons/day); and

(iii) Maintaining the 30-day rolling average oil content of the feedstock no higher than 0.02 percent.

(2) For the volatile organic compound operating limit in § 63.7790(d)(2),

(i) Computing and recording the 30-day rolling average of the volatile organic compound emissions for each operating day according to the performance test procedures in § 63.7824(e);

(ii) Recording the sampling date and time, sampling values, and sinter produced (tons/day); and

(iii) Maintaining the 30-day rolling average of volatile organic compound emissions no higher than 0.2 lb/ton of sinter produced.

(g) If the hourly average pressure drop or water flow rate for a venturi scrubber or hourly average opacity for an electrostatic precipitator exceeds the operating limit, you must follow the procedures in paragraphs (g)(1) through (4) of this section.

(1) You must initiate corrective action to determine the cause of the exceedance within 1 hour. During any period of corrective action, you must continue to monitor and record all required operating parameters for equipment that remains in operation. Within 24 hours of the exceedance, you must measure and record the hourly average operating parameter value for the emission unit on which corrective action was taken. If the hourly average parameter value meets the applicable operating limit, then the corrective action was successful and the emission unit is in compliance with the applicable operating limit.

(2) If the initial corrective action required in paragraph (g)(1) of this section was not successful, you must complete additional corrective action within the next 24 hours (48 hours from the time of the exceedance). During any period of corrective action, you must continue to monitor and record all required operating parameters for equipment that remains in operation. After this second 24-hour period, you must again measure and record the hourly average operating parameter value for the emission unit on which corrective action was taken. If the hourly average parameter value meets the applicable operating limit, then the corrective action was successful and the emission unit is in compliance with the applicable operating limit.

(3) For purposes of paragraphs (g)(1) and (2) of this section, in the case of an exceedance of the hourly average opacity operating limit for an electrostatic precipitator, measurements of the hourly average opacity based on visible

emission observations in accordance with Method 9 (40 CFR part 60, appendix A) may be taken to evaluate the effectiveness of corrective action.

(4) If the second attempt at corrective action required in paragraph (g)(2) of this section was not successful, you must report the exceedance as a deviation in your next semiannual compliance report according to § 63.7841(b).

[68 FR 27663, May 20, 2003, as amended at 71 FR 39587, July 13, 2006]

§ 63.7834 How do I demonstrate continuous compliance with the operation and maintenance requirements that apply to me?

(a) For each capture system and control device subject to an operating limit in § 63.7790(b), you must demonstrate continuous compliance with the operation and maintenance requirements in § 63.7800(b) by meeting the requirements of paragraphs (a)(1) through (4) of this section:

(1) Making monthly inspections of capture systems and initiating corrective action according to § 63.7800(b)(1) and recording all information needed to document conformance with these requirements;

(2) Performing preventative maintenance according to § 63.7800(b)(2) and recording all information needed to document conformance with these requirements;

(3) Initiating and completing corrective action for a baghouse equipped with a bag leak detection system or COMS according to § 63.7800(b)(4) and recording all information needed to document conformance with these requirements, including the time you initiated corrective action, the corrective action(s) taken, and date on which corrective action was completed.

(4) Initiating and completing corrective action for a venturi scrubber equipped with a CPMS or an electrostatic precipitator equipped with a COMS according to § 63.7833(g) and recording all information needed to document conformance with these requirements, including the time you initiated corrective action, the corrective action(s) taken within the first 24 hours according to § 63.7833(g)(1) and whether they were successful, the corrective action(s) taken within the second 24 hours according to § 63.7833(g)(2) and whether they were successful, and the date on which corrective action was completed.

(b) You must maintain a current copy of the operation and maintenance plan required in § 63.7800(b) onsite and available for inspection upon request. You must keep the plans for the life of the affected source or until the affected source is no longer subject to the requirements of this subpart.

[68 FR 27663, May 20, 2003, as amended at 71 FR 39588, July 13, 2006]

§ 63.7835 What other requirements must I meet to demonstrate continuous compliance?

(a) *Deviations.* Except as provided in § 63.7833(g), you must report each instance in which you did not meet each emission limitation in § 63.7790 that applies to you. This includes periods of startup, shutdown, and malfunction. You also must report each instance in which you did not meet each operation and maintenance requirement in § 63.7800 that applies to you. These instances are deviations from the emission limitations and operation and maintenance requirements in this subpart. These deviations must be reported according to the requirements in § 63.7841.

(b) *Startups, shutdowns, and malfunctions.* (1) Consistent with §§ 63.6(e) and 63.7(e)(1), deviations that occur during a period of startup, shutdown, or malfunction are not violations if you demonstrate to the Administrator's satisfaction that you were operating in accordance with § 63.6(e)(1).

(2) The Administrator will determine whether deviations that occur during a period of startup, shutdown, or malfunction are violations, according to the provisions in § 63.6(e).

[68 FR 27663, May 20, 2003, as amended at 71 FR 20468, Apr. 20, 2006; 71 FR 39588, July 13, 2006]

Notifications, Reports, and Records

§ 63.7840 What notifications must I submit and when?

(a) You must submit all of the notifications in §§ 63.6(h)(4) and (5), 63.7(b) and (c), 63.8(e) and (f)(4), and 63.9(b) through (h) that apply to you by the specified dates.

(b) As specified in § 63.9(b)(2), if you startup your affected source before May 20, 2003, you must submit your initial notification no later than September 17, 2003.

(c) As specified in § 63.9(b)(3), if you start your new affected source on or after May 20, 2003, you must submit your initial notification no later than 120 calendar days after you become subject to this subpart.

(d) If you are required to conduct a performance test, you must submit a notification of intent to conduct a performance test at least 60 calendar days before the performance test is scheduled to begin as required in § 63.7(b)(1).

(e) If you are required to conduct a performance test, opacity observation, or other initial compliance demonstration, you must submit a notification of compliance status according to § 63.9(h)(2)(ii).

(1) For each initial compliance demonstration that does not include a performance test, you must submit the notification of compliance status before the close of business on the 30th calendar day following completion of the initial compliance demonstration.

(2) For each initial compliance demonstration that does include a performance test, you must submit the notification of compliance status, including the performance test results, before the close of business on the 60th calendar day following the completion of the performance test according to § 63.10(d)(2).

§ 63.7841 What reports must I submit and when?

(a) *Compliance report due dates.* Unless the Administrator has approved a different schedule, you must submit a semiannual compliance report to your permitting authority according to the requirements in paragraphs (a)(1) through (5) of this section.

(1) The first compliance report must cover the period beginning on the compliance date that is specified for your affected source in § 63.7783 and ending on June 30 or December 31, whichever date comes first after the compliance date that is specified for your source in § 63.7783.

(2) The first compliance report must be postmarked or delivered no later than July 31 or January 31, whichever date comes first after your first compliance report is due.

(3) Each subsequent compliance report must cover the semiannual reporting period from January 1 through June 30 or the semiannual reporting period from July 1 through December 31.

(4) Each subsequent compliance report must be postmarked or delivered no later than July 31 or January 31, whichever date comes first after the end of the semiannual reporting period.

(5) For each affected source that is subject to permitting regulations pursuant to 40 CFR part 70 or 71, and if the permitting authority has established dates for submitting semiannual reports pursuant to 40 CFR 70.6(a)(3)(iii)(A) or 40 CFR 71.6(a)(3)(iii)(A), you may submit the first and subsequent compliance reports according to the dates the permitting authority has established instead of according to the dates in paragraphs (a)(1) through (4) of this section.

(b) *Compliance report contents.* Each compliance report must include the information in paragraphs (b)(1) through (3) of this section and, as applicable, paragraphs (b)(4) through (8) of this section.

(1) Company name and address.

(2) Statement by a responsible official, with that official's name, title, and signature, certifying the truth, accuracy, and completeness of the content of the report.

(3) Date of report and beginning and ending dates of the reporting period.

(4) If you had a startup, shutdown, or malfunction during the reporting period and you took actions consistent with your startup, shutdown, and malfunction plan, the compliance report must include the information in § 63.10(d)(5)(i).

(5) If there were no deviations from the continuous compliance requirements in §§ 63.7833 and 63.7834 that apply to you, a statement that there were no deviations from the emission limitations or operation and maintenance requirements during the reporting period.

(6) If there were no periods during which a continuous monitoring system (including a CPMS, COMS, or continuous emission monitoring system (CEMS) was out-of-control as specified in § 63.8(c)(7), a statement that there were no periods during which the CPMS was out-of-control during the reporting period.

(7) For each deviation from an emission limitation in § 63.7790 that occurs at an affected source where you are not using a continuous monitoring system (including a CPMS, COMS, or CEMS) to comply with an emission limitation in this subpart, the compliance report must contain the information in paragraphs (b)(1) through (4) of this section and the information in paragraphs (b)(7)(i) and (ii) of this section. This includes periods of startup, shutdown, and malfunction.

(i) The total operating time of each affected source during the reporting period.

(ii) Information on the number, duration, and cause of deviations (including unknown cause, if applicable) as applicable and the corrective action taken.

(8) For each deviation from an emission limitation occurring at an affected source where you are using a continuous monitoring system (including a CPMS or COMS) to comply with the emission limitation in this subpart, you must include the information in paragraphs (b)(1) through (4) of this section and the information in paragraphs (b)(8)(i) through (xi) of this section. This includes periods of startup, shutdown, and malfunction.

(i) The date and time that each malfunction started and stopped.

(ii) The date and time that each continuous monitoring was inoperative, except for zero (low-level) and high-level checks.

(iii) The date, time, and duration that each continuous monitoring system was out-of-control as specified in § 63.8(c)(7), including the information in § 63.8(c)(8).

(iv) The date and time that each deviation started and stopped, and whether each deviation occurred during a period of startup, shutdown, or malfunction or during another period.

(v) A summary of the total duration of the deviation during the reporting period and the total duration as a percent of the total source operating time during that reporting period.

(vi) A breakdown of the total duration of the deviations during the reporting period including those that are due to startup, shutdown, control equipment problems, process problems, other known causes, and other unknown causes.

(vii) A summary of the total duration of continuous monitoring system downtime during the reporting period and the total duration of continuous monitoring system downtime as a percent of the total source operating time during the reporting period.

(viii) A brief description of the process units.

(ix) A brief description of the continuous monitoring system.

(x) The date of the latest continuous monitoring system certification or audit.

(xi) A description of any changes in continuous monitoring systems, processes, or controls since the last reporting period.

(c) *Immediate startup, shutdown, and malfunction report.* If you had a startup, shutdown, or malfunction during the semiannual reporting period that was not consistent with your startup, shutdown, and malfunction plan, you must submit an immediate startup, shutdown, and malfunction report according to the requirements in § 63.10(d)(5)(ii).

(d) *Part 70 monitoring report.* If you have obtained a title V operating permit for an affected source pursuant to 40 CFR part 70 or 71, you must report all deviations as defined in this subpart in the semiannual monitoring report required by 40 CFR 70.6(a)(3)(iii)(A) or 40 CFR 71.6(a)(3)(iii)(A). If you submit a compliance report for an affected source along with, or as part of, the semiannual monitoring report required by 40 CFR 70.6(a)(3)(iii)(A) or 40 CFR 71.6(a)(3)(iii)(A), and the compliance report includes all the required information concerning deviations from any emission limitation or operation and maintenance requirement in this subpart, submission of the compliance report satisfies any obligation to report the same deviations in the semiannual monitoring report. However, submission of a compliance report does not otherwise affect any obligation you may have to report deviations from permit requirements for an affected source to your permitting authority.

§ 63.7842 What records must I keep?

(a) You must keep the following records:

(1) A copy of each notification and report that you submitted to comply with this subpart, including all documentation supporting any initial notification or notification of compliance status that you submitted, according to the requirements in § 63.10(b)(2)(xiv).

(2) The records in § 63.6(e)(3)(iii) through (v) related to startup, shutdown, and malfunction.

(3) Records of performance tests, performance evaluations, and opacity observations as required in § 63.10(b)(2)(viii).

(b) For each COMS, you must keep the records specified in paragraphs (b)(1) through (4) of this section.

(1) Records described in § 63.10(b)(2)(vi) through (xi).

(2) Monitoring data for a performance evaluation as required in § 63.6(h)(7)(i) and (ii).

(3) Previous (that is, superceded) versions of the performance evaluation plan as required in § 63.8(d)(3).

(4) Records of the date and time that each deviation started and stopped, and whether the deviation occurred during a period of startup, shutdown, or malfunction or during another period.

(c) You must keep the records required in § 63.6(h)(6) for visual observations.

(d) You must keep the records required in §§ 63.7833 and 63.7834 to show continuous compliance with each emission limitation and operation and maintenance requirement that applies to you.

§ 63.7843 In what form and how long must I keep my records?

(a) Your records must be in a form suitable and readily available for expeditious review, according to § 63.10(b)(1).

(b) As specified in § 63.10(b)(1), you must keep each record for 5 years following the date of each occurrence, measurement, maintenance, corrective action, report, or record.

(c) You must keep each record on site for at least 2 years after the date of each occurrence, measurement, maintenance, corrective action, report, or record according to § 63.10(b)(1). You can keep the records offsite for the remaining 3 years.

Other Requirements and Information

§ 63.7850 What parts of the General Provisions apply to me?

Table 4 to this subpart shows which parts of the General Provisions in §§ 63.1 through 63.15 apply to you.

§ 63.7851 Who implements and enforces this subpart?

(a) This subpart can be implemented and enforced by us, the United States Environmental Protection Agency (U.S. EPA), or a delegated authority such as your State, local, or tribal agency. If the U.S. EPA Administrator has delegated authority to your State, local, or tribal agency, then that agency has the authority to implement and enforce this subpart. You should contact your U.S. EPA Regional Office to find out if this subpart is delegated to your State, local, or tribal agency.

(b) In delegating implementation and enforcement authority of this subpart to a State, local, or tribal agency under subpart E of this part, the authorities contained in paragraph (c) of this section are retained by the Administrator of the U.S. EPA and are not transferred to the State, local, or tribal agency.

(c) The authorities that will not be delegated to State, local, or tribal agencies are specified in paragraphs (c)(1) through (4) of this section.

(1) Approval of alternative opacity emission limits in Table 1 to this subpart under § 63.6(h)(9).

(2) Approval of major alternatives to test methods under § 63.7(e)(2)(ii) and (f) and as defined in § 63.90, except for approval of an alternative method for the oil content of the sinter plant feedstock or volatile organic compound measurements for the sinter plant windbox exhaust stream stack as provided in § 63.7824(f).

(3) Approval of major alternatives to monitoring under § 63.8(f) and as defined in § 63.90.

(4) Approval of major alternatives to recordkeeping and reporting under § 63.10(f) and as defined in § 63.90.

[68 FR 27663, May 20, 2003, as amended at 71 FR 39588, July 13, 2006]

§ 63.7852 What definitions apply to this subpart?

Terms used in this subpart are defined in the Clean Air Act, in § 63.2, and in this section as follows.

Bag leak detection system means a system that is capable of continuously monitoring relative particulate matter (dust) loadings in the exhaust of a baghouse to detect bag leaks and other upset conditions. A bag leak detection system includes, but is not limited to, an instrument that operates on tribroelectric, light scattering, light transmittance, or other effect to continuously monitor relative particulate matter loadings.

Basic oxygen process furnace means any refractory-lined vessel in which high-purity oxygen is blown under pressure through a bath of molten iron, scrap metal, and fluxes to produce steel. This definition includes both top and bottom blown furnaces, but does not include argon oxygen decarburization furnaces.

Basic oxygen process furnace shop means the place where steelmaking operations that begin with the transfer of molten iron (hot metal) from the torpedo car and end prior to casting the molten steel, including hot metal transfer, desulfurization, slag skimming, refining in a basic oxygen process furnace, and ladle metallurgy occur.

Basic oxygen process furnace shop ancillary operations means the processes where hot metal transfer, hot metal desulfurization, slag skimming, and ladle metallurgy occur.

Blast furnace means a furnace used for the production of molten iron from iron ore and other iron bearing materials.

Bottom-blown furnace means any basic oxygen process furnace in which oxygen and other combustion gases are introduced into the bath of molten iron through tuyeres in the bottom of the vessel or through tuyeres in the bottom and sides of the vessel.

Casthouse means the building or structure that encloses the bottom portion of a blast furnace where the hot metal and slag are tapped from the furnace.

Certified observer means a visible emission observer certified to perform EPA Method 9 opacity observations.

Desulfurization means the process in which reagents such as magnesium, soda ash, and lime are injected into the hot metal, usually with dry air or nitrogen, to remove sulfur.

Deviation means any instance in which an affected source subject to this subpart, or an owner or operator of such a source:

(1) Fails to meet any requirement or obligation established by this subpart, including but not limited to any emission limitation (including operating limits) or operation and maintenance requirement;

(2) Fails to meet any term or condition that is adopted to implement an applicable requirement in this subpart and that is included in the operating permit for any affected source required to obtain such a permit; or

(3) Fails to meet any emission limitation in this subpart during startup, shutdown, or malfunction, regardless of whether or not such failure is permitted by this subpart.

Discharge end means the place where those operations conducted within the sinter plant starting at the discharge of the sintering machine's traveling grate including (but not limited to) hot sinter crushing, screening, and transfer operations occur.

Emission limitation means any emission limit, opacity limit, or operating limit.

Hot metal transfer station means the location in a basic oxygen process furnace shop where molten iron (hot metal) is transferred from a torpedo car or hot metal car used to transport hot metal from the blast furnace casthouse to a holding vessel or ladle in the basic oxygen process furnace shop. This location also is known as the reladling station or ladle transfer station.

Integrated iron and steel manufacturing facility means an establishment engaged in the production of steel from iron ore.

Ladle metallurgy means a secondary steelmaking process that is performed typically in a ladle after initial refining in a basic oxygen process furnace to adjust or amend the chemical and/or mechanical properties of steel. This definition does not include vacuum degassing.

Primary emissions means particulate matter emissions from the basic oxygen process furnace generated during the steel production cycle which are captured and treated in the furnace's primary emission control system.

Primary emission control system means the combination of equipment used for the capture and collection of primary emissions (*e.g.,* an open hood capture system used in conjunction with an electrostatic precipitator or a closed hood system used in conjunction with a scrubber).

Primary oxygen blow means the period in the steel production cycle of a basic oxygen process furnace during which oxygen is blown through the molten iron bath by means of a lance inserted from the top of the vessel (top-blown) or through tuyeres in the bottom and/or sides of the vessel (bottom-blown).

Responsible official means responsible official as defined in § 63.2.

Secondary emissions means particulate matter emissions that are not controlled by a primary emission control system, including emissions that escape from open and closed hoods, lance hole openings, and gaps or tears in ductwork to the primary emission control system.

Secondary emission control system means the combination of equipment used for the capture and collection of secondary emissions from a basic oxygen process furnace.

Sinter cooler means the apparatus used to cool the hot sinter product that is transferred from the discharge end through contact with large volumes of induced or forced draft air.

Sinter plant means the machine used to produce a fused clinker-like aggregate or sinter of fine iron-bearing materials suited for use in a blast furnace. The machine is composed of a continuous traveling grate that conveys a bed of ore fines and other finely divided iron-bearing material and fuel (typically coke breeze), a burner at the feed end of the grate for ignition, and a series of downdraft windboxes along the length of the strand to support downdraft combustion and heat sufficient to produce a fused sinter product.

Skimming station means the locations inside a basic oxygen process furnace shop where slag is removed from the top of the molten metal bath.

Steel production cycle means the operations conducted within the basic oxygen process furnace shop that are required to produce each batch of steel. The following operations are included: scrap charging, preheating (when done), hot metal charging, primary oxygen blowing, sampling, (vessel turndown and turnup), additional oxygen blowing (when done), tapping, and deslagging. The steel production cycle begins when the scrap is charged to the furnace and ends after the slag is emptied from the vessel into the slag pot.

Top-blown furnace means any basic oxygen process furnace in which oxygen is introduced into the bath of molten iron by means of an oxygen lance inserted from the top of the vessel.

Windboxes means the compartments that provide for a controlled distribution of downdraft combustion air as it is drawn through the sinter bed of a sinter plant to make the fused sinter product.

[68 FR 27663, May 20, 2003, as amended at 71 FR 39588, July 13, 2006]

Table 1 to Subpart FFFFF of Part 63—Emission and Opacity Limits

As required in § 63.7790(a), you must comply with each applicable emission and opacity limit in the following table:

For . . .	You must comply with each of the following . . .
1. Each windbox exhaust stream at an existing sinter plant	You must not cause to be discharged to the atmosphere any gases that contain particulate matter in excess of 0.4 lb/ton of product sinter.
2. Each windbox exhaust stream at a new sinter plant	You must not cause to be discharged to the atmosphere any gases that contain particulate matter in excess of 0.3 lb/ton of product sinter.
3. Each discharge end at an existing sinter plant	a. You must not cause to be discharged to the atmosphere any gases that exit from one or more control devices that contain, on a flow-weighted basis, particulate matter in excess of 0.02 gr/dscf [1 2]; and
	b. You must not cause to be discharged to the atmosphere any secondary emissions that exit any opening in the building or structure housing the discharge end that exhibit opacity greater than 20 percent (6-minute average).
4. Each discharge end at a new sinter plant	a. You must not cause to be discharged to the atmosphere any gases that exit from one or more control devices that contain, on a flow weighted basis, particulate matter in excess of 0.01 gr/dscf; and
	b. You must not cause to be discharged to the atmosphere any secondary emissions that exit any opening in the building or structure housing the discharge end that exhibit opacity greater than 10 percent (6-minute average).

For . . .	You must comply with each of the following . . .
5. Each sinter cooler at an existing sinter plant	You must not cause to be discharged to the atmosphere any emissions that exhibit opacity greater than 10 percent (6-minute average).
6. Each sinter cooler at a new sinter plant	You must not cause to be discharged to the atmosphere any gases that contain particulate matter in excess of 0.01 gr/dscf.
7. Each casthouse at an existing blast furnace	a. You must not cause to be discharged to the atmosphere any gases that exit from a control device that contain particulate matter in excess of 0.01 gr/dscf [2]; and
	b. You must not cause to be discharged to the atmosphere any secondary emissions that exit any opening in the casthouse or structure housing the blast furnace that exhibit opacity greater than 20 percent (6-minute average).
8. Each casthouse at a new blast furnace	a. You must not cause to be discharged to the atmosphere any gases that exit from a control device that contain particulate matter in excess of 0.003 gr/dscf; and
	b. You must not cause to be discharged to the atmosphere any secondary emissions that exit any opening in the casthouse or structure housing the blast furnace that exhibit opacity greater than 15 percent (6-minute average).
9. Each BOPF at a new or existing shop	a. You must not cause to be discharged to the atmosphere any gases that exit from a primary emission control system for a BOPF with a closed hood system at a new or existing BOPF shop that contain, on a flow-weighted basis, particulate matter in excess of 0.03 gr/dscf during the primary oxygen blow [2 3]; and
	b. You must not cause to be discharged to the atmosphere any gases that exit from a primary emission control system for a BOPF with an open hood system that contain, on a flow-weighted basis, particulate matter in excess of 0.02 gr/dscf during the steel production cycle for an existing BOPF shop [2 3]or 0.01 gr/dscf during the steel production cycle for a new BOPF shop [3]; and
	c. You must not cause to be discharged to the atmosphere any gases that exit from a control device used solely for the collection of secondary emissions from the BOPF that contain particulate matter in excess of 0.01 gr/dscf for an existing BOPF shop [2]or 0.0052 gr/dscf for a new BOPF shop.
10. Each hot metal transfer, skimming, and desulfurization operation at a new or existing BOPF shop	You must not cause to be discharged to the atmosphere any gases that exit from a control device that contain particulate matter in excess of 0.01 gr/dscf for an existing BOPF shop [2]or 0.003 gr/dscf for a new BOPF shop.
11. Each ladle metallurgy operation at a new or existing BOPF shop	You must not cause to be discharged to the atmosphere any gases that exit from a control device that contain particulate matter in excess of 0.01 gr/dscf for an existing BOPF shop [2]or 0.004 gr/dscf for a new BOPF shop.
12. Each roof monitoring at an existing BOPF shop	You must not cause to be discharged to the atmosphere any secondary emissions that exit any opening in the BOPF shop or any other building housing the BOPF or BOPF shop operation that exhibit opacity greater than 20 percent (3-minute average).
13. Each roof monitor at a new BOPF shop	a. You must not cause to be discharged to the atmosphere any secondary emissions that exit any opening in the BOPF shop or other building housing a bottom-blown BOPF or BOPF shop operations that exhibit opacity (for any set of 6-minute averages) greater than 10 percent, except that one 6-minute period not to exceed 20 percent may occur once per steel production cycle; or
	b. You must not cause to be discharged to the atmosphere any secondary emissions that exit any opening in the BOPF shop or other building housing a top-blown BOPF or BOPF shop operations that exhibit opacity (for any set of 3-minute averages) greater than 10 percent, except that one 3-minute period greater than 10 percent but less than 20 percent may occur once per steel production cycle.

[1] This limit applies if the cooler is vented to the same control device as the discharge end.

[2] This concentration limit (gr/dscf) for a control device does not apply to discharges inside a building or structure housing the discharge end at an existing sinter plant, inside a casthouse at an existing blast furnace, or inside an existing BOPF shop if the control device was installed before August 30, 2005.

[3] This limit applies to control devices operated in parallel for a single BOPF during the oxygen blow.

[68 FR 27663, May 20, 2003, as amended at 71 FR 39588, July 13, 2006]

Table 2 to Subpart FFFFF of Part 63—Initial Compliance With Emission and Opacity Limits

As required in § 63.7825(a)(1), you must demonstrate initial compliance with the emission and opacity limits according to the following table:

For . . .	You have demonstrated initial compliance if . . .
1. Each windbox exhaust stream at an existing sinter plant	The process-weighted mass rate of particulate matter from a windbox exhaust stream, measured according to the performance test procedures in § 63.7822(c), did not exceed 0.4 lb/ton of product sinter.
2. Each windbox exhaust stream at a new sinter plant	The process-weighted mass rate of particulate matter from a windbox exhaust stream, measured according to the performance test procedures in § 63.7822(c), did not exceed 0.3 lb/ton of product sinter.
3. Each discharge end at an existing sinter plant	a. The flow-weighted average concentration of particulate matter from one or more control devices applied to emissions from a discharge end, measured according to the performance test procedures in § 63.7822(d), did not exceed 0.02 gr/dscf; and
	b. The opacity of secondary emissions from each discharge end, determined according to the performance test procedures in § 63.7823(c), did not exceed 20 percent (6-minute average).
4. Each discharge end at a new sinter plant	a. The flow-weighted average concentration of particulate matter from one or more control devices applied to emissions from a discharge end, measured according to the performance test procedures in § 63.7822(d), did not exceed 0.01 gr/dscf; and
	b. The opacity of secondary emissions from each discharge end, determined according to the performance test procedures in § 63.7823(c), did not exceed 10 percent (6-minute average).
5. Each sinter cooler at an existing sinter plant	The opacity of emissions, determined according to the performance test procedures in § 63.7823(e), did not exceed 10 percent (6-minute average).
6. Each sinter cooler at a new sinter plant	The average concentration of particulate matter, measured according to the performance test procedures in § 63.7822(b), did not exceed 0.01 gr/dscf.
7. Each casthouse at an existing blast furnace	a. The average concentration of particulate matter from a control device applied to emissions from a casthouse, measured according to the performance test procedures in § 63.7822(e), did not exceed 0.01 gr/dscf; and
	b. The opacity of secondary emissions from each casthouse, determined according to the performance test procedures in § 63.7823(c), did not exceed 20 percent (6-minute average).
8. Each casthouse at a new blast furnace	a. The average concentration of particulate matter from a control device applied to emissions from a casthouse, measured according to the performance test procedures in § 63.7822(e), did not exceed 0.003 gr/dscf; and
	b. The opacity of secondary emissions from each casthouse, determined according to the performance test procedures in § 63.7823(c), did not exceed 15 percent (6-minute average).
9. Each BOPF at a new or existing BOPF shop	a. The average concentration of particulate matter from a primary emission control system applied to emissions from a BOPF with a closed hood system, measured according to the performance test procedures in § 63.7822(f), did not exceed 0.03 gr/dscf for a new or existing BOPF shop;
	b. The average concentration of particulate matter from a primary emission control system applied to emissions from a BOPF with an open hood system, measured according to the performance test procedures in § 63.7822(g), did not exceed 0.02 gr/dscf for an existing BOPF shop or 0.01 gr/dscf for a new BOPF shop; and

For . . .	You have demonstrated initial compliance if . . .
	c. The average concentration of particulate matter from a control device applied solely to secondary emissions from a BOPF, measured according to the performance test procedures in § 63.7822(g), did not exceed 0.01 gr/dscf for an existing BOPF shop or 0.0052 gr/dscf for a new BOPF shop.
10. Each hot metal transfer skimming, and desulfurization at a new or existing BOPF shop	The average concentration of particulate matter from a control device applied to emissions from hot metal transfer, skimming, or desulfurization, measured according to the performance test procedures in § 63.7822(h), did not exceed 0.01 gr/dscf for an existing BOPF shop or 0.003 gr/dscf for a new BOPF shop.
11. Each ladle metallurgy operation at a new or existing BOPF shop	The average concentration of particulate matter from a control device applied to emissions from a ladle metallurgy operation, measured according to the performance test procedures in § 63.7822(h), did not exceed 0.01 gr/dscf for an existing BOPF shop or 0.004 gr/dscf for a new BOPF shop.
12. Each roof monitor at an existing BOPF shop	The opacity of secondary emissions from each BOPF shop, determined according to the performance test procedures in § 63.7823(d), did not exceed 20 percent (3-minute average).
13. Each roof monitor at a new BOPF shop	a. The opacity of the highest set of 6-minute averages from each BOPF shop housing a bottom-blown BOPF, determined according to the performance test procedures in § 63.7823(d), did not exceed 20 percent and the second highest set of 6-minute averages did not exceed 10 percent; or
	b. The opacity of the highest set of 3-minute averages from each BOPF shop housing a top-blown BOPF, determined according to the performance test procedures in § 63.7823(d), did not exceed 20 percent and the second highest set of 3-minute averages did not exceed 10 percent.

[68 FR 27663, May 20, 2003, as amended at 71 FR 39589, July 13, 2006]

Table 3 to Subpart FFFFF of Part 63—Continuous Compliance With Emission and Opacity Limits

As required in § 63.7833(a), you must demonstrate continuous compliance with the emission and opacity limits according to the following table:

For . . .	You must demonstrate continuous compliance by . . .
1. Each windbox exhaust stream at an existing sinter plant	a. Maintaining emissions of particulate matter at or below 0.4 lb/ton of product sinter; and
	b. Conducting subsequent performance tests at the frequencies specified in § 63.7821.
2. Each windbox exhaust stream at a new sinter plant	a. Maintaining emissions of particulate matter at or below 0.3 lb/ton of product sinter; and
	b. Conducting subsequent performance tests at the frequencies specified in § 63.7821.
3. Each discharge end at an existing sinter plant	a. Maintaining emissions of particulate matter from one or more control devices at or below 0.02 gr/dscf; and
	b. Maintaining the opacity of secondary emissions that exit any opening in the building or structure housing the discharge end at or below 20 percent (6-minute average); and
	c. Conducting subsequent performance tests at the frequencies specified in § 63.7821.
4. Each discharge end at a new sinter plant	a. Maintaining emissions of particulate matter from one or more control devices at or below 0.01 gr/dscf; and
	b. Maintaining the opacity of secondary emissions that exit any opening in the building or structure housing the discharge end at or below 10 percent (6-minute average); and

For . . .	You must demonstrate continuous compliance by . . .
	c. Conducting subsequent performance tests at the frequencies specified in § 63.7821.
5. Each sinter cooler at an existing sinter plant	a. Maintaining the opacity of emissions that exit any sinter cooler at or below 10 percent (6-minute average); and
	b. Conducting subsequent performance tests at the frequencies specified in § 63.7821.
6. Each sinter cooler at a new sinter plant	a. Maintaining emissions of particulate matter at or below 0.1 gr/dscf; and
	b. Conducting subsequent performance tests at the frequencies specified in § 63.7821.
7. Each casthouse at an existing blast furnace	a. Maintaining emissions of particulate matter from a control device at or below 0.01 gr/dscf; and
	b. Maintaining the opacity of secondary emissions that exit any opening in the casthouse or structure housing the casthouse at or below 20 percent (6-minute average); and
	c. Conducting subsequent performance tests at the frequencies specified in § 63.7821.
8. Each casthouse at a new blast furnace	a. Maintaining emissions of particulate matter from a control device at or below 0.003 gr/dscf; and
	b. Maintaining the opacity of secondary emissions that exit any opening in the casthouse or structure housing the casthouse at or below 15 percent (6-minute average); and
	c. Conducting subsequent performance tests at the frequencies specified in § 63.7821.
9. Each BOPF at a new or existing BOPF shop	a. Maintaining emissions of particulate matter from the primary control system for a BOPF with a closed hood system at or below 0.03 gr/dscf; and
	b. Maintaining emissions of particulate matter from the primary control system for a BOPF with an open hood system at or below 0.02 gr/dscf for an existing BOPF shop or 0.01 gr/dscf for a new BOPF shop; and
	c. Maintaining emissions of particulate matter from a control device applied solely to secondary emissions from a BOPF at or below 0.01 gr/dscf for an existing BOPF shop or 0.0052 gr/dscf for a new BOPF shop; and
	d. Conducting subsequent performance tests at the frequencies specified in § 63.7821.
10. Each hot metal transfer, skimming, and desulfurization operation at a new or existing BOPF shop	a. Maintaining emissions of particulate matter from a control device at or below 0.01 gr/dscf at an existing BOPF or 0.003 gr/dscf for a new BOPF; and
	b. Conducting subsequent performance tests at the frequencies specified in § 63.7821.
11. Each ladle metallurgy operation at a new or existing BOPF shop	a. Maintaining emissions of particulate matter from a control device at or below 0.01 gr/dscf at an existing BOPF shop or 0.004 gr/dscf for a new BOPF shop; and
	b. Conducting subsequent performance tests at the frequencies specified in § 63.7821.
12. Each roof monitor at an existing BOPF shop	a. Maintaining the opacity of secondary emissions that exit any opening in the BOPF shop or other building housing the BOPF shop or shop operation at or below 20 percent (3-minute average); and
	b. Conducting subsequent performance tests at the frequencies specified in § 63.7821.

For . . .	You must demonstrate continuous compliance by . . .
13. Each roof monitor at a new BOPF shop	a. Maintaining the opacity (for any set of 6-minute averages) of secondary emissions that exit any opening in the BOPF shop or other building housing a bottom-blown BOPF or shop operation at or below 10 percent, except that one 6-minute period greater than 10 percent but no more than 20 percent may occur once per steel production cycle; and
	b. Maintaining the opacity (for any set of 3-minute averages) of secondary emissions that exit any opening in the BOPF shop or other building housing a top-blown BOPF or shop operation at or below 10 percent, except that one 3-minute period greater than 10 percent but less than 20 percent may occur once per steel production cycle; and
	c. Conducting subsequent performance tests at the frequencies specified in § 63.7821.

[71 FR 39590, July 13, 2006]

Table 4 to Subpart FFFFF of Part 63—Applicability of General Provisions to Subpart FFFFF

As required in § 63.7850, you must comply with the requirements of the NESHAP General Provisions (40 CFR part 63, subpart A) shown in the following table:

Citation	Subject	Applies to Subpart FFFFF	Explanation
§ 63.1	Applicability	Yes.	
§ 63.2	Definitions	Yes.	
§ 63.3	Units and Abbreviations	Yes.	
§ 63.4	Prohibited Activities	Yes.	
§ 63.5	Construction/Reconstruction	Yes.	
§ 63.6(a), (b), (c), (d), (e), (f), (g), (h)(2)(ii)-(h)(9)	Compliance with Standards and Maintenance Requirements	Yes.	
§ 63.6(h)(2)(i)	Determining Compliance with Opacity and VE Standards	No	Subpart FFFFF specifies methods and procedures for determining compliance with opacity emission and operating limits.
§ 63.6(i)	Extension of Compliance with Emission Standards	Yes	
§ 63.6(j)	Exemption from Compliance with Emission Standards	Yes	
§ 63.7(a)(1)-(2)	Applicability and Performance Test Dates	No	Subpart FFFFF and specifies performance test applicability and dates.
§ 63.7(a)(3), (b), (c)-(h)	Performance Testing Requirements	Yes	
§ 63.8(a)(1)-(3), (b), (c)(1)-(3), (c)(4)(i)-(ii), (c)(5)-(6), (c)(7)-(8), (f)(1)-(5), (g)(1)-(4)	Monitoring Requirements	Yes	CMS requirements in §§ 63.8(c)(4)(i)-(ii), (c)(5)-(6), (d), and (e) apply only to COMS.
§ 63.8(a)(4)	Additional Monitoring Requirements for Control Devices in § 63.11	No	Subpart FFFFF does not require flares.
§ 63.8(c)(4)	Continuous Monitoring System Requirements	No	Subpart FFFFF specifies requirements for operation of CMS.
§ 63.8(f)(6)	RATA Alternative	No	
§ 63.8(g)(5)	Data Reduction	No	Subpart FFFFF specifies data reduction requirements.

Citation	Subject	Applies to Subpart FFFFF	Explanation
§ 63.9	Notification Requirements	Yes	Additional notifications for CMS in § 63.9(g) apply only to COMS.
§ 63.10(a), (b)(1), (b)(2)(i)-(xii), (b)(2)(xiv), (b)(3), (c)(1)-(6), (c)(9)-(15), (d), (e)(1)-(2), (e)(4), (f)	Recordkeeping and Reporting Requirements	Yes	Additional records for CMS in § 63.10(c)(1)-(6), (9)-(15), and reports in § 63.10(d)(1)-(2) apply only to COMS.
§ 63.10(b)(2) (xiii)	CMS Records for RATA Alternative	No	
§ 63.10(c)(7)-(8)	Records of Excess Emissions and Parameter Monitoring Exceedances for CMS	No	Subpart FFFFF specifies record requirements.
§ 63.10(e)(3)	Excess Emission Reports	No	Subpart FFFFF specifies reporting requirements
§ 63.11	Control Device Requirements	No	Subpart FFFFF does not require flares.
§ 63.12	State Authority and Delegations	Yes.	
§ 63.13-§ 63.15	Addresses, Incorporation by Reference, Availability of Information	Yes.	

[68 FR 27663, May 20, 2003, as amended at 71 FR 39591, July 13, 2006]

Attachment K
To Part 70 Operating Permit Renewal No. T089-29907-00121

[Downloaded from the eCFR on May 17, 2013]

Electronic Code of Federal Regulations

Title 40: Protection of Environment

Part 63, Subpart CCC—National Emission Standards for Hazardous Air Pollutants for Steel Pickling—HCl Process Facilities and Hydrochloric Acid Regeneration Plants

Source: 64 FR 33218, June 22, 1999, unless otherwise noted.

§ 63.1155 Applicability.

(a) The provisions of this subpart apply to the following facilities and plants that are major sources for hazardous air pollutants (HAP) or are parts of facilities that are major sources for HAP:

(1) All new and existing steel pickling facilities that pickle carbon steel using hydrochloric acid solution that contains 6 percent or more by weight HCl and is at a temperature of 100 °F or higher; and

(2) All new and existing hydrochloric acid regeneration plants.

(3) The provisions of this subpart do not apply to facilities that pickle carbon steel without using hydrochloric acid, to facilities that pickle only specialty steel, or to acid regeneration plants that regenerate only acids other than hydrochloric acid.

(b) For the purposes of implementing this subpart, the affected sources at a facility or plant subject to this subpart are as follows: Continuous and batch pickling lines, hydrochloric acid regeneration plants, and hydrochloric acid storage vessels.

(c) Table 1 to this subpart specifies the provisions of this part 63, subpart A that apply and those that do not apply to owners and operators of steel pickling facilities and hydrochloric acid regeneration plants subject to this subpart.

(d) In response to an action to enforce the standards set forth in this subpart, the owner or operator may assert an affirmative defense to a claim for civil penalties for violations of such standards that are caused by a malfunction, as defined in § 63.2. Appropriate penalties may be assessed, however, if the owner or operator fails to meet the burden of proving all the requirements in the affirmative defense. The affirmative defense shall not be available for claims for injunctive relief.

(1) To establish the affirmative defense in any action to enforce such a standard, the owner or operator must timely meet the reporting requirements of paragraph (d)(2) of this section, and must prove by a preponderance of evidence that:

(i) The violation was caused by a sudden, infrequent, and unavoidable failure of air pollution control equipment, process equipment, or a process to operate in a normal and usual manner; and could not have been prevented through careful planning, proper design, or better operation and maintenance practices; and did not stem from any activity or event that could have been foreseen and avoided, or planned for; and was not part of a recurring pattern indicative of inadequate design, operation, or maintenance; and

(ii) Repairs were made as expeditiously as possible when exceeded violation occurred. Off-shift and overtime labor were used, to the extent practicable to make these repairs; and

(iii) The frequency, amount, and duration of the violation (including any bypass) were minimized to the maximum extent practicable; and

(iv) If the violation resulted from a bypass of control equipment or a process, then the bypass was unavoidable to prevent loss of life, personal injury, or severe property damage; and

(v) All possible steps were taken to minimize the impact of the violation on ambient air quality, the environment, and human health; and

(vi) All emissions monitoring and control systems were kept in operation if at all possible, consistent with safety and good air pollution control practices; and

(vii) All of the actions in response to the violation were documented by properly signed, contemporaneous operating logs; and

(viii) At all times, the affected source was operated in a manner consistent with good practices for minimizing emissions; and

(ix) A written root cause analysis has been prepared, the purpose of which is to determine, correct, and eliminate the primary causes of the malfunction and the violation resulting from the malfunction event at issue. The analysis shall also specify, using the best monitoring methods and engineering judgment, the amount of excess emissions that were the result of the malfunction.

(2) *Report.* The owner of operator seeking to assert an affirmative defense shall submit a written report to the Administrator with all necessary supporting documentation, that it has met the requirements set forth in paragraph (d)(1) of this section. This affirmative defense report shall be included in the first periodic compliance, deviation report or excess emission report otherwise required after the initial occurrence of the violation of the relevant standard (which may be the end of any applicable averaging period). If such compliance, deviation report or excess emission report is due less than 45 days after the initial occurrence of the violation, the affirmation defense report may be included in the second compliance, deviation report or excess emission report due after the initial occurrence of the violation of the relevant standard.

[64 FR 33218, June 22, 1999, as amended at 77 FR 58250, Sept. 19, 2012]

§ 63.1156 Definitions.

Terms used in this subpart are defined in the Clean Air Act, in subpart A of this part, or in this section as follows:

Affirmative defense means, in the context of an enforcement proceeding, a response or a defense put forward by a defendant, regarding which the defendant has the burden of proof, and the merits of which are independently and objectively evaluated in a judicial or administrative proceeding.

Batch pickling line means the collection of equipment and tanks configured for pickling metal in any form but usually in discrete shapes where the material is lowered in batches into a bath of acid solution, allowed to remain until the scale is dissolved, then removed from the solution, drained, and rinsed by spraying or immersion in one or more rinse tanks to remove residual acid.

Carbon steel means steel that contains approximately 2 percent or less carbon, 1.65 percent or less manganese, 0.6 percent or less silicon, and 0.6 percent or less copper.

Closed-vent system means a system that is not open to the atmosphere and that is composed of piping, ductwork, connections, and, if necessary, flow-inducing devices that transport emissions from a process unit or piece of equipment (e.g., pumps, pressure relief devices, sampling connections, open-ended valves or lines, connectors, and instrumentation systems) back into a closed system or into any device that is capable of reducing or collecting emissions.

Continuous pickling line means the collection of equipment and tanks configured for pickling metal strip, rod, wire, tube, or pipe that is passed through an acid solution in a continuous or nearly continuous manner and rinsed in another tank or series of tanks to remove residual acid. This definition includes continuous spray towers.

Hydrochloric acid regeneration plant means the collection of equipment and processes configured to reconstitute fresh hydrochloric acid pickling solution from spent pickle liquor using a thermal treatment process.

Hydrochloric acid regeneration plant production mode means operation under conditions that result in production of usable regenerated acid or iron oxide.

Hydrochloric acid storage vessel means a stationary vessel used for the bulk containment of virgin or regenerated hydrochloric acid.

Responsible maintenance official means a person designated by the owner or operator as having the knowledge and the authority to sign records and reports required under this rule.

Specialty steel means a category of steel that includes silicon electrical, alloy, tool, and stainless steels.

Spray tower means an enclosed vertical tower in which acid pickling solution is sprayed onto moving steel strip in multiple vertical passes.

Steel pickling means the chemical removal of iron oxide mill scale that is formed on steel surfaces during hot rolling or hot forming of semi-finished steel products through contact with an aqueous solution of acid where such contact occurs prior to shaping or coating of the finished steel product. This definition does not include removal of light rust or scale from finished steel products or activation of the metal surface prior to plating or coating.

Steel pickling facility means any facility that operates one or more batch or continuous steel pickling lines.

[64 FR 33218, June 22, 1999, as amended at 77 FR 58250, Sept. 19, 2012]

§ 63.1157 Emission standards for existing sources.

(a) *Pickling lines.* No owner or operator of an existing affected continuous or batch pickling line at a steel pickling facility shall cause or allow to be discharged into the atmosphere from the affected pickling line:

(1) Any gases that contain HCl in a concentration in excess of 18 parts per million by volume (ppmv); or

(2) HCl at a mass emission rate that corresponds to a collection efficiency of less than 97 percent.

(b) *Hydrochloric acid regeneration plants.* (1) No owner or operator of an existing affected plant shall cause or allow to be discharged into the atmosphere from the affected plant any gases that contain HCl in a concentration greater than 25 ppmv.

(2) In addition to the requirement of paragraph (b)(1) of this section, no owner or operator of an existing plant shall cause or allow to be discharged into the atmosphere from the affected plant any gases that contain chlorine (Cl_2) in a concentration in excess of 6 ppmv.

[64 FR 33218, June 22, 1999, as amended at 77 FR 58250, Sept. 19, 2012]

§ 63.1158 Emission standards for new or reconstructed sources.

(a) *Pickling lines* —(1) *Continuous pickling lines.* No owner or operator of a new or reconstructed affected continuous pickling line at a steel pickling facility shall cause or allow to be discharged into the atmosphere from the affected pickling line:

(i) Any gases that contain HCl in a concentration in excess of 6 ppmv; or

(ii) HCl at a mass emission rate that corresponds to a collection efficiency of less than 99 percent.

(2) *Batch pickling lines.* No owner or operator of a new or reconstructed affected batch pickling line at a steel pickling facility shall cause or allow to be discharged into the atmosphere from the affected pickling line:

(i) Any gases that contain HCl in a concentration in excess of 18 ppmv; or

(ii) HCl at a mass emission rate that corresponds to a collection efficiency of less than 97 percent.

(b) *Hydrochloric acid regeneration plants.* (1) No owner or operator of a new or reconstructed affected plant shall cause or allow to be discharged into the atmosphere from the affected plant any gases that contain HCl in a concentration greater than 12 ppmv.

(2) In addition to the requirement of paragraph (b)(1) of this section, no owner or operator of a new or reconstructed affected plant shall cause or allow to be discharged into the atmosphere from the affected plant any gases that contain Cl_2 in a concentration in excess of 6 ppmv.

§ 63.1159 Operational and equipment standards for existing, new, or reconstructed sources.

(a) *Hydrochloric acid regeneration plant.* The owner or operator of an affected plant must operate the affected plant at all times while in production mode in a manner that minimizes the proportion of excess air fed to the process and maximizes the process offgas temperature consistent with producing usable regenerated acid or iron oxide.

(b) *Hydrochloric acid storage vessels.* The owner or operator of an affected vessel shall provide and operate, except during loading and unloading of acid, a closed-vent system for each vessel. Loading and unloading shall be conducted either through enclosed lines or each point where the acid is exposed to the atmosphere shall be equipped with a local fume capture system, ventilated through an air pollution control device.

(c) *General duty to minimize emissions.* At all times, each owner or operator must operate and maintain any affected source subject to the requirements of this subpart, including associated air pollution control equipment and monitoring equipment in a manner consistent with safety and good air pollution control practices for minimizing emissions. The general duty to minimize emissions does not require the owner or operator to make any further efforts to reduce emissions if levels required by this standard have been achieved. Determination of whether such operation and maintenance procedures are being used will be based on information available to the Administrator which may include, but is not limited to, monitoring results, review of operation and maintenance procedures, review of operation and maintenance records, and inspection of the source.

[64 FR 33218, June 22, 1999, as amended at 77 FR 58250, Sept. 19, 2012]

§ 63.1160 Compliance dates and maintenance requirements.

(a) *Compliance dates.* (1) The owner or operator of an affected existing steel pickling facility and/or hydrochloric acid regeneration plant subject to this subpart shall achieve initial compliance with the requirements of this subpart no later than June 22, 2001.

(2) The owner or operator of a new or reconstructed steel pickling facility and/or hydrochloric acid regeneration plant subject to this subpart that commences construction or reconstruction after September 18, 1997, shall achieve compliance with the requirements of this subpart immediately upon startup of operations or by June 22, 1999, whichever is later.

(b) *Maintenance requirements.* (1) The owner or operator shall prepare an operation and maintenance plan for each emission control device to be implemented no later than the compliance date. The plan shall be incorporated by reference into the source's title V permit. All such plans must be consistent with good maintenance practices, and, for a scrubber emission control device, must at a minimum:

(i) Require monitoring and recording the pressure drop across the scrubber once per shift while the scrubber is operating in order to identify changes that may indicate a need for maintenance;

(ii) Require the manufacturer's recommended maintenance at the recommended intervals on fresh solvent pumps, recirculating pumps, discharge pumps, and other liquid pumps, in addition to exhaust system and scrubber fans and motors associated with those pumps and fans;

(iii) Require cleaning of the scrubber internals and mist eliminators at intervals sufficient to prevent buildup of solids or other fouling;

(iv) Require an inspection of each scrubber at intervals of no less than 3 months with:

(A) Cleaning or replacement of any plugged spray nozzles or other liquid delivery devices;

(B) Repair or replacement of missing, misaligned, or damaged baffles, trays, or other internal components;

(C) Repair or replacement of droplet eliminator elements as needed;

(D) Repair or replacement of heat exchanger elements used to control the temperature of fluids entering or leaving the scrubber; and

(E) Adjustment of damper settings for consistency with the required air flow.

(v) If the scrubber is not equipped with a viewport or access hatch allowing visual inspection, alternate means of inspection approved by the Administrator may be used.

(vi) The owner or operator shall initiate procedures for corrective action within 1 working day of detection of an operating problem and complete all corrective actions as soon as practicable. Procedures to be initiated are the applicable actions that are specified in the maintenance plan. Failure to initiate or provide appropriate repair, replacement, or other corrective action is a violation of the maintenance requirement of this subpart.

(vii) The owner or operator shall maintain a record of each inspection, including each item identified in paragraph (b)(2)(iv) of this section, that is signed by the responsible maintenance official and that shows the date of each inspection, the problem identified, a description of the repair, replacement, or other corrective action taken, and the date of the repair, replacement, or other corrective action taken.

(2) The owner or operator of each hydrochloric acid regeneration plant shall develop and implement a written maintenance program. The program shall require:

(i) Performance of the manufacturer's recommended maintenance at the recommended intervals on all required systems and components;

(ii) Initiation of procedures for appropriate and timely repair, replacement, or other corrective action within 1 working day of detection; and

(iii) Maintenance of a daily record, signed by a responsible maintenance official, showing the date of each inspection for each requirement, the problems found, a description of the repair, replacement, or other action taken, and the date of repair or replacement.

[64 FR 33218, June 22, 1999, as amended at 77 FR 58250, Sept. 19, 2012]

§ 63.1161 Performance testing and test methods.

(a) *Demonstration of compliance.* The owner or operator shall conduct an initial performance test for each process or emission control device to determine and demonstrate compliance with the applicable emission limitation according to the requirements in § 63.7 of subpart A of this part and in this section. Performance tests shall be conducted under such conditions as the Administrator specifies to the owner or operator based on representative performance of the affected source for the period being tested. Upon request, the owner or operator shall make available to the Administrator such records as may be necessary to determine the conditions of performance tests.

(b) *Establishment of scrubber operating parameters.* During the performance test for each emission control device, the owner or operator using a wet scrubber to achieve compliance shall establish site-specific operating parameter values for the minimum scrubber makeup water flow rate and, for scrubbers that operate with recirculation, the minimum recirculation water flow rate. During the emission test, each operating parameter must be monitored continuously and recorded with sufficient frequency to establish a representative average value for that parameter, but no less frequently than once every 15 minutes. The owner or operator shall determine the operating parameter monitoring values as the averages of the values recorded during any of the runs for which results are used to establish the emission concentration or collection efficiency per paragraph (a)(2) of this section. An owner or operator may conduct multiple performance tests to establish alternative compliant operating parameter values. Also, an owner or operator may reestablish compliant operating parameter values as part of any performance test that is conducted subsequent to the initial test or tests.

(c) *Establishment of hydrochloric acid regeneration plant operating parameters.* (1) During the performance test for hydrochloric acid regeneration plants, the owner or operator shall establish site-specific operating parameter values for the minimum process offgas temperature and the maximum proportion of excess air fed to the process as described in § 63.1162(b)(1) of this subpart. During the emission test, each operating parameter must be monitored and recorded with sufficient frequency to establish a representative average value for that parameter, but no less frequently than once every 15 minutes for parameters that are monitored continuously. Amount of iron in the spent pickle liquor shall be determined for each run by sampling the liquor every 15 minutes and analyzing a composite of the samples. The owner or operator shall determine the compliant monitoring values as the averages of the values recorded during any of the runs for which results are used to establish the emission concentration per paragraph (a)(2) of this section. An owner or operator may conduct multiple performance tests to establish alternative compliant operating parameter values. Also, an owner or operator may reestablish compliant operating parameter values as part of any performance test that is conducted subsequent to the initial test or tests.

(2) [Reserved]

(d) *Test methods.* (1) The following test methods in appendix A of 40 CFR part 60 shall be used to determine compliance under §§ 63.1157(a), 63.1157(b), 63.1158(a), and 63.1158(b) of this subpart:

(i) Method 1, to determine the number and location of sampling points, with the exception that no traverse point shall be within one inch of the stack or duct wall;

(ii) Method 2, to determine gas velocity and volumetric flow rate;

(iii) Method 3, to determine the molecular weight of the stack gas;

(iv) Method 4, to determine the moisture content of the stack gas; and

(v) Method 26A, “Determination of Hydrogen Halide and Halogen Emissions from Stationary Sources—Isokinetic Method,” to determine the HCl mass flows at the inlet and outlet of a control device or the concentration of HCl discharged to the atmosphere, and also to determine the concentration of Cl_2 discharged to the atmosphere from acid regeneration plants. If compliance with a collection efficiency standard is being demonstrated, inlet and outlet measurements shall be performed simultaneously. The minimum sampling time for each run shall be 60 minutes and the minimum sample volume 0.85 dry standard cubic meters (30 dry standard cubic feet). The concentrations of HCl and Cl_2 shall be calculated for each run as follows:

C_{HCl} (ppmv) = 0.659 C_{HCl} (mg/dscm),

and C_{C12} (ppmv) = 0.339 C_{C12} (mg/dscm),

where C(ppmv) is concentration in ppmv and C(mg/dscm) is concentration in milligrams per dry standard cubic meter as calculated by the procedure given in Method 26A.

(2) The owner or operator may use equivalent alternative measurement methods approved by the Administrator.

[64 FR 33218, June 22, 1999, as amended at 77 FR 58251, Sept. 19, 2012]

§ 63.1162 Monitoring requirements.

(a) The owner or operator of a new, reconstructed, or existing steel pickling facility or acid regeneration plant subject to this subpart shall:

(1) Conduct performance tests to measure the HCl mass flows at the control device inlet and outlet or the concentration of HCl exiting the control device according to the procedures described in § 63.1161 of this subpart. Performance tests shall be conducted either annually or according to an alternative schedule that is approved by the applicable permitting authority, but no less frequently than every 2½ years or twice per title V permit term. If any performance test shows that the HCl emission limitation is being exceeded, then the owner or operator is in violation of the emission limit.

(2) In addition to conducting performance tests, if a wet scrubber is used as the emission control device, install, operate, and maintain systems for the measurement and recording of the scrubber makeup water flow rate and, if required, recirculation water flow rate. These flow rates must be monitored continuously and recorded at least once per shift while the scrubber is operating. Operation of the wet scrubber with excursions of scrubber makeup water flow rate and recirculation water flow rate less than the minimum values established during the performance test or tests will require initiation of corrective action as specified by the maintenance requirements in § 63.1160(b)(2) of this subpart.

(3) If an emission control device other than a wet scrubber is used, install, operate, and maintain systems for the measurement and recording of the appropriate operating parameters.

(4) Failure to record each of the operating parameters listed in paragraph (a)(2) of this section is a violation of the monitoring requirements of this subpart.

(5) Each monitoring device shall be certified by the manufacturer to be accurate to within 5 percent and shall be calibrated in accordance with the manufacturer's instructions but not less frequently than once per year.

(6) The owner or operator may develop and implement alternative monitoring requirements subject to approval by the Administrator.

(b) The owner or operator of a new, reconstructed, or existing acid regeneration plant subject to this subpart shall also install, operate, and maintain systems for the measurement and recording of the:

(1) Process offgas temperature, which shall be monitored continuously and recorded at least once every shift while the facility is operating in production mode; and

(2) Parameters from which proportion of excess air is determined. Proportion of excess air shall be determined by a combination of total air flow rate, fuel flow rate, spent pickle liquor addition rate, and amount of iron in the spent pickle liquor, or by any other combination of parameters approved by the Administrator in accordance with § 63.8(f) of subpart A of this part. Proportion of excess air shall be determined and recorded at least once every shift while the plant is operating in production mode.

(3) Each monitoring device must be certified by the manufacturer to be accurate to within 5 percent and must be calibrated in accordance with the manufacturer's instructions but not less frequently than once per year.

(4) Operation of the plant with the process offgas temperature lower than the value established during performance testing or with the proportion of excess air greater than the value established during performance testing is a violation of the operational standard specified in § 63.1159(a) of this subpart.

(c) The owner or operator of an affected hydrochloric acid storage vessel shall inspect each vessel semiannually to determine that the closed-vent system and either the air pollution control device or the enclosed loading and unloading line, whichever is applicable, are installed and operating when required.

§ 63.1163 Notification requirements.

(a) *Initial notifications.* As required by § 63.9(b) of subpart A of this part, the owner or operator shall submit the following written notifications to the Administrator:

(1) The owner or operator of an area source that subsequently becomes subject to the requirements of the standard shall provide notification to the applicable permitting authority as required by § 63.9(b)(1) of subpart A of this part.

(2) As required by § 63.9(b)(2) of subpart A of this part, the owner or operator of an affected source that has an initial startup before June 22, 1999, shall notify the Administrator that the source is subject to the requirements of the standard. The notification shall be submitted not later than October 20, 1999 (or within 120 calendar days after the source becomes subject to this standard), and shall contain the information specified in §§ 63.9(b)(2)(i) through 63.9(b)(2)(v) of subpart A of this part.

(3) As required by § 63.9(b)(3) of subpart A of this part, the owner or operator of a new or reconstructed affected source, or a source that has been reconstructed such that it is an affected source, that has an initial startup after the effective date and for which an application for approval of construction or reconstruction is not required under § 63.5(d) of subpart A of this part, shall notify the Administrator in writing that the source is subject to the standards no later than 120 days after initial startup. The notification shall contain the information specified in §§ 63.9(b)(2)(i) through 63.9(b)(2)(v) of subpart A of this part, delivered or postmarked with the notification required in § 63.9(b)(5) of subpart A of this part.

(4) As required by § 63.9(b)(4) of subpart A of this part, the owner or operator of a new or reconstructed major affected source that has an initial startup after June 22, 1999, and for which an application for approval of construction or reconstruction is required under § 63.5(d) of subpart A of this part shall provide the information specified in §§ 63.9(b)(4)(i) through 63.9(b)(4)(v) of subpart A of this part.

(5) As required by § 63.9(b)(5) of subpart A of this part, the owner or operator who, after June 22, 1999, intends to construct a new affected source or reconstruct an affected source subject to this standard, or reconstruct a source such that it becomes an affected source subject to this standard, shall notify the Administrator, in writing, of the intended construction or reconstruction.

(b) *Request for extension of compliance.* As required by § 63.9(c) of subpart A of this part, if the owner or operator of an affected source cannot comply with this standard by the applicable compliance date for that source, or if the owner or operator has installed BACT or technology to meet LAER consistent with § 63.6(i)(5) of subpart A of this part, he/she may submit to the Administrator (or the State with an approved permit program) a request for an extension of compliance as specified in §§ 63.6(i)(4) through 63.6(i)(6) of subpart A of this part.

(c) *Notification that source is subject to special compliance requirements.* As required by § 63.9(d) of subpart A of this part, an owner or operator of a new source that is subject to special compliance requirements as specified in §§ 63.6(b)(3) and 63.6(b)(4) of subpart A of this part shall notify the Administrator of his/her compliance obligations not later than the notification dates established in § 63.9(b) of subpart A of this part for new sources that are not subject to the special provisions.

(d) *Notification of performance test.* As required by § 63.9(e) of subpart A of this part, the owner or operator of an affected source shall notify the Administrator in writing of his or her intention to conduct a performance test at least 60 calendar days before the performance test is scheduled to begin, to allow the Administrator to review and approve the site-specific test plan required under § 63.7(c) of subpart A of this part and, if requested by the Administrator, to have an observer present during the test.

(e) *Notification of compliance status.* The owner or operator of an affected source shall submit a notification of compliance status as required by § 63.9(h) of subpart A of this part when the source becomes subject to this standard.

§ 63.1164 Reporting requirements.

(a) *Reporting results of performance tests.* Within 60 days after the date of completing each performance test (defined in § 63.2), as required by this subpart you must submit the results of the performance tests, including any

associated fuel analyses, required by this subpart to the EPA's WebFIRE database by using the Compliance and Emissions Data Reporting Interface (CEDRI) that is accessed through the EPA's Central Data Exchange (CDX) (*www.epa.gov/;cdx*). Performance test data must be submitted in the file format generated through use of the EPA's Electronic Reporting Tool (ERT) (see *http://www.epa.gov/ttn/chief/ert/index.html*). Only data collected using test methods on the ERT Web site are subject to this requirement for submitting reports electronically to WebFIRE. Owners or operators who claim that some of the information being submitted for performance tests is confidential business information (CBI) must submit a complete ERT file including information claimed to be CBI on a compact disk, flash drive or other commonly used electronic storage media to the EPA. The electronic media must be clearly marked as CBI and mailed to U.S. EPA/OAPQS/CORE CBI Office, Attention: WebFIRE Administrator, MD C404-02, 4930 Old Page Rd., Durham, NC 27703. The same ERT file with the CBI omitted must be submitted to the EPA via CDX as described earlier in this paragraph. At the discretion of the delegated authority, you must also submit these reports, including the confidential business information, to the delegated authority in the format specified by the delegated authority. For any performance test conducted using test methods that are not listed on the ERT Web site, the owner or operator shall submit the results of the performance test to the Administrator at the appropriate address listed in § 63.13.

(b) *Progress reports.* The owner or operator of an affected source who is required to submit progress reports under § 63.6(i) of subpart A of this part shall submit such reports to the Administrator (or the State with an approved permit program) by the dates specified in the written extension of compliance.

(c) *Reporting malfunctions.* The number, duration, and a brief description for each type of malfunction which occurred during the reporting period and which caused or may have caused any applicable emission limitation to be exceeded shall be stated in a semiannual report. The report must also include a description of actions taken by an owner or operator during a malfunction of an affected source to minimize emissions in accordance with § 63.1159(c), including actions taken to correct a malfunction. The report, to be certified by the owner or operator or other responsible official, shall be submitted semiannually and delivered or postmarked by the 30th day following the end of each calendar half.

[64 FR 33218, June 22, 1999, as amended at 71 FR 20458, Apr. 20, 2006; 77 FR 58251, Sept. 19, 2012]

§ 63.1165 Recordkeeping requirements.

(a) *General recordkeeping requirements.* As required by § 63.10(b)(2) of subpart A of this part, the owner or operator shall maintain records for 5 years from the date of each record of:

(1) The occurrence and duration of each malfunction of operation (*i.e.,* process equipment);

(2) The occurrence and duration of each malfunction of the air pollution control equipment;

(3) All maintenance performed on the air pollution control equipment;

(4) Actions taken during periods of malfunction to minimize emissions in accordance with § 63.1259(c) and the dates of such actions (including corrective actions to restore malfunctioning process and air pollution control equipment to its normal or usual manner of operation);

(5) All required measurements needed to demonstrate compliance with the standard and to support data that the source is required to report, including, but not limited to, performance test measurements (including initial and any subsequent performance tests) and measurements as may be necessary to determine the conditions of the initial test or subsequent tests;

(6) All results of initial or subsequent performance tests;

(7) If the owner or operator has been granted a waiver from recordkeeping or reporting requirements under § 63.10(f) of subpart A of this part, any information demonstrating whether a source is meeting the requirements for a waiver of recordkeeping or reporting requirements;

(8) If the owner or operator has been granted a waiver from the initial performance test under § 63.7(h) of subpart A of this part, a copy of the full request and the Administrator's approval or disapproval;

(9) All documentation supporting initial notifications and notifications of compliance status required by § 63.9 of subpart A of this part; and

(10) Records of any applicability determination, including supporting analyses.

(b) *Subpart CCC records.* (1) In addition to the general records required by paragraph (a) of this section, the owner or operator shall maintain records for 5 years from the date of each record of:

(i) Scrubber makeup water flow rate and recirculation water flow rate if a wet scrubber is used;

(ii) Calibration and manufacturer certification that monitoring devices are accurate to within 5 percent; and

(iii) Each maintenance inspection and repair, replacement, or other corrective action.

(2) The owner or operator of an acid regeneration plant shall also maintain records for 5 years from the date of each record of process offgas temperature and parameters that determine proportion of excess air.

(3) The owner or operator shall keep the written operation and maintenance plan on record after it is developed to be made available for inspection, upon request, by the Administrator for the life of the affected source or until the source is no longer subject to the provisions of this subpart. In addition, if the operation and maintenance plan is revised, the owner or operator shall keep previous (i.e., superseded) versions of the plan on record to be made available for inspection by the Administrator for a period of 5 years after each revision to the plan.

(c) *Recent records.* General records and subpart CCC records for the most recent 2 years of operation must be maintained on site. Records for the previous 3 years may be maintained off site.

[64 FR 33218, June 22, 1999, as amended at 77 FR 58251, Sept. 19, 2012]

§ 63.1166 Implementation and enforcement.

(a) This subpart can be implemented and enforced by the U.S. EPA, or a delegated authority such as the applicable State, local, or Tribal agency. If the U.S. EPA Administrator has delegated authority to a State, local, or Tribal agency, then that agency, in addition to the U.S. EPA, has the authority to implement and enforce this subpart. Contact the applicable U.S. EPA Regional Office to find out if implementation and enforcement of this subpart is delegated to a State, local, or Tribal agency.

(b) In delegating implementation and enforcement authority of this subpart to a State, local, or Tribal agency under subpart E of this part, the authorities contained in paragraph (c) of this section are retained by the Administrator of U.S. EPA and cannot be transferred to the State, local, or Tribal agency.

(c) The authorities that cannot be delegated to State, local, or Tribal agencies are as specified in paragraphs (c)(1) through (8) of this section.

(1) Approval of alternatives to the requirements in §§ 63.1155, 63.1157 through 63.1159, and 63.1160(a).

(2) Approval of major alternatives to test methods under § 63.7(e)(2)(ii) and (f), as defined in § 63.90, and as required in this subpart.

(3) Approval of any alternative measurement methods for HCl and CL_2 to those specified in § 63.1161(d)(1).

(4) Approval of major alternatives to monitoring under § 63.8(f), as defined in § 63.90, and as required in this subpart.

(5) Approval of any alternative monitoring requirements to those specified in §§ 63.1162(a)(2) through (5) and 63.1162(b)(1) through (3).

(6) Approval of major alternatives to recordkeeping and reporting under § 63.10(f), as defined in § 63.90, and as required in this subpart.

(7) Waiver of recordkeeping requirements specified in § 63.1165.

(8) Approval of an alternative schedule for conducting performance tests to the requirement specified in § 63.1162(a)(1).

[68 FR 37356, June 23, 2003]

§§ 63.1167-63.1174 [Reserved]

Table 1 to Subpart CCC of Part 63—Applicability of General Provisions (40 CFR Part 63, Subpart A) to Subpart CCC

Reference	Applies to Subpart CCC	Explanation
63.1-63.5	Yes.	
63.6 (a)-(d)	Yes	
63.6(e)(1)(i)	No	See § 63.1259(c) for general duty requirement. Any cross-reference to § 63.6(e)(1)(i) in any other general provision incorporated by reference shall be treated as a cross-reference to § 63.1259(c).
63.6(e)(1)(ii)	No	
63.6(e)(1)(iii)	Yes	
63.6(e)(2)	No	Section reserved.
63.6(e)(3)	No	
63.6(f)(1)	No	
63.6(f)(2)-(3)	Yes	
63.6(g)	Yes	
63.6(h)	No	Subpart CCC does not contain an opacity or visible emission standard.
63.6 (i)-(j)	Yes.	
63.7	Yes	
63.8(a)-(c)	Yes	
63.8(d)(1)-(2)	Yes	
63.8(d)(3)	Yes, except for last sentence	
63.8(e)-(f)	Yes	
63.10(a)	Yes	
63.10(b)(1)	Yes	
63.10(b)(2)(i)	No	
63.10(b)(2)(ii)	No	See § 63.1265(a)(1) for recordkeeping of occurrence and duration of malfunctions. See § 63.1265(a)(4) for recordkeeping of actions taken during malfunction. Any cross-reference to § 63.10(b)(2)(ii) in any other general provision incorporated by reference shall be treated as a cross-reference to § 63.1265(a)(1).
63.10(b)(2)(iii)	Yes	
63.10(b)(2)(iv)-(b)(2)(v)	No	
63.10(b)(2)(vi)-(b)(2)(xiv)	Yes	

Reference	Applies to Subpart CCC	Explanation
63.10(b)(3)	Yes	
63.10(c)(1)-(9)	Yes	
63.10(c)(10)	No	See § 63.1164(c) for reporting malfunctions. Any cross-reference to § 63.10(c)(10) in any other general provision incorporated by reference shall be treated as a cross-reference to § 63.1164(c).
63.10(c)(11)	No	See § 63.1164(c) for reporting malfunctions. Any cross-reference to § 63.10(c)(11) in any other general provision incorporated by reference shall be treated as a cross-reference to § 63.1164(c).
63.10(c)(12)-(c)(14)	Yes	
63.10(c)(15)	No	
63.10(d)(1)-(2)	Yes.	
63.10(d)(3)	No	Subpart CCC does not contain an opacity or visible emission standard.
63.10(d)(4)	Yes	
63.10(d)(5)	No	
63.10(e)-(f)	Yes.	
63.11	No	Subpart CCC does not require the use of flares.
63.12-63.15	Yes	

[64 FR 33218, June 22, 1999, as amended at 77 FR 58252, Sept. 19, 2012]

Attachment L
To Part 70 Operating Permit Renewal No. T089-29907-00121

[Downloaded from the eCFR on November 7, 2013]

Electronic Code of Federal Regulations

Title 40: Protection of Environment

Subpart L—National Emission Standard for Benzene Emissions from Coke By-Product Recovery Plants

Source: 54 FR 38073, Sept. 14, 1989, unless otherwise noted.

§61.130 Applicability, designation of sources, and delegation of authority.

(a) The provisions of this subpart apply to each of the following sources at furnace and foundry coke by-product recovery plants: tar decanters, tar storage tanks, tar-intercepting sumps, flushing-liquor circulation tanks, light-oil sumps, light-oil condensers, light-oil decanters, wash-oil decanters, wash-oil circulation tanks, naphthalene processing, final coolers, final-cooler cooling towers, and the following equipment that are intended to operate in benzene service: pumps, valves, exhausters, pressure relief devices, sampling connection systems, open-ended valves or lines, flanges or other connectors, and control devices or systems required by §61.135.

(b) The provisions of this subpart also apply to benzene storage tanks, BTX storage tanks, light-oil storage tanks, and excess ammonia-liquor storage tanks at furnace coke by-product recovery plants.

(c) In delegating implementation and enforcement authority to a State under section 112 of the Act, the authorities contained in paragraph (d) of this section shall be retained by the Administrator and not transferred to a State.

(d) Authorities that will not be delegated to States: §61.136(d).

[54 FR 51699, Dec. 15, 1989, as amended at 56 FR 47406, Sept. 19, 1991]

§61.131 Definitions.

As used in this subpart, all terms not defined herein shall have the meaning given them in the Act, in subpart A of part 61, and in subpart V of part 61. The following terms shall have the specific meanings given them:

Annual coke production means the coke produced in the batteries connected to the coke by-product recovery plant over a 12-month period. The first 12-month period concludes on the first December 31 that comes at least 12 months after the effective date or after the date of initial startup if initial startup is after the effective date.

Benzene storage tank means any tank, reservoir, or container used to collect or store refined benzene.

BTX storage tank means any tank, reservoir, or container used to collect or store benzene-toluene-xylene or other light-oil fractions.

Car seal means a seal that is placed on the device used to change the position of a valve (e.g., from open to closed) such that the position of the valve cannot be changed without breaking the seal and requiring the replacement of the old seal, once broken, with a new seal.

Coke by-product recovery plant means any plant designed and operated for the separation and recovery of coal tar derivatives (by-products) evolved from coal during the coking process of a coke oven battery.

Equipment means each pump, valve, exhauster, pressure relief device, sampling connection system, open-ended valve or line, and flange or other connector in benzene service.

Excess ammonia-liquor storage tank means any tank, reservoir, or container used to collect or store a flushing liquor solution prior to ammonia or phenol recovery.

Exhauster means a fan located between the inlet gas flange and outlet gas flange of the coke oven gas line that provides motive power for coke oven gases.

Foundry coke means coke that is produced from raw materials with less than 26 percent volatile material by weight and that is subject to a coking period of 24 hours or more. Percent volatile material of the raw materials (by weight) is the weighted average percent volatile material of all raw materials (by weight) charged to the coke oven per coking cycle.

Foundry coke by-product recovery plant means a coke by-product recovery plant connected to coke batteries whose annual coke production is at least 75 percent foundry coke.

Flushing-liquor circulation tank means any vessel that functions to store or contain flushing liquor that is separated from the tar in the tar decanter and is recirculated as the cooled liquor to the gas collection system.

Furnace coke means coke produced in by-product ovens that is not foundry coke.

Furnace coke by-product recovery plant means a coke by-product recovery plant that is not a foundry coke by-product recovery plant.

In benzene service means a piece of equipment, other than an exhauster, that either contains or contacts a fluid (liquid or gas) that is at least 10 percent benzene by weight or any exhauster that either contains or contacts a fluid (liquid or gas) at least 1 percent benzene by weight as determined by the provisions of §61.137(b). The provisions of §61.137(b) also specify how to determine that a piece of equipment is not in benzene service.

Light-oil condenser means any unit in the light-oil recovery operation that functions to condense benzene-containing vapors.

Light-oil decanter means any vessel, tank, or other type of device in the light-oil recovery operation that functions to separate light oil from water downstream of the light-oil condenser. A light-oil decanter also may be known as a light-oil separator.

Light-oil storage tank means any tank, reservoir, or container used to collect or store crude or refined light-oil.

Light-oil sump means any tank, pit, enclosure, or slop tank in light-oil recovery operations that functions as a wastewater separation device for hydrocarbon liquids on the surface of the water.

Naphthalene processing means any operations required to recover naphthalene including the separation, refining, and drying of crude or refined naphthalene.

Non-regenerative carbon adsorber means a series, over time, of non-regenerative carbon beds applied to a single source or group of sources, where non-regenerative carbon beds are carbon beds that are either never regenerated or are moved from their location for regeneration.

Process vessel means each tar decanter, flushing-liquor circulation tank, light-oil condenser, light-oil decanter, wash-oil decanter, or wash-oil circulation tank.

Regenerative carbon adsorber means a carbon adsorber applied to a single source or group of sources, in which the carbon beds are regenerated without being moved from their location.

Semiannual means a 6-month period; the first semiannual period concludes on the last day of the last full month during the 180 days following initial startup for new sources; the first semiannual period concludes on the last day of the last full month during the 180 days after the effective date of the regulation for existing sources.

Tar decanter means any vessel, tank, or container that functions to separate heavy tar and sludge from flushing liquor by means of gravity, heat, or chemical emulsion breakers. A tar decanter also may be known as a flushing-liquor decanter.

Tar storage tank means any vessel, tank, reservoir, or other type of container used to collect or store crude tar or tar-entrained naphthalene, except for tar products obtained by distillation, such as coal tar pitch, creosotes, or carbolic oil. This definition also includes any vessel, tank, reservoir, or container used to reduce the water content of the tar by means of heat, residence time, chemical emulsion breakers, or centrifugal separation. A tar storage tank also may be known as a tar-dewatering tank.

Tar-intercepting sump means any tank, pit, or enclosure that serves to receive or separate tars and aqueous condensate discharged from the primary cooler. A tar-intercepting sump also may be known as a primary-cooler decanter.

Vapor incinerator means any enclosed combustion device that is used for destroying organic compounds and does not necessarily extract energy in the form of steam or process heat.

Wash-oil circulation tank means any vessel that functions to hold the wash oil used in light-oil recovery operations or the wash oil used in the wash-oil final cooler.

Wash-oil decanter means any vessel that functions to separate, by gravity, the condensed water from the wash oil received from a wash-oil final cooler or from a light-oil scrubber.

[54 FR 38073, Sept. 14, 1989, as amended at 56 FR 47406, Sept. 19, 1991]

§61.132 Standard: Process vessels, storage tanks, and tar-intercepting sumps.

(a)(1) Each owner or operator of a furnace or a foundry coke byproduct recovery plant shall enclose and seal all openings on each process vessel, tar storage tank, and tar-intercepting sump.

(2) The owner or operator shall duct gases from each process vessel, tar storage tank, and tar-intercepting sump to the gas collection system, gas distribution system, or other enclosed point in the by-product recovery process where the benzene in the gas will be recovered or destroyed. This control system shall be designed and operated for no detectable emissions, as indicated by an instrument reading of less than 500 ppm above background and visual inspections, as determined by the methods specified in §61.245(c). This system can be designed as a closed, positive pressure, gas blanketing system.

(i) Except, the owner or operator may elect to install, operate, and maintain a pressure relief device, vacuum relief device, an access hatch, and a sampling port on each process vessel, tar storage tank, and tar-intercepting sump. Each access hatch and sampling port must be equipped with a gasket and a cover, seal, or lid that must be kept in a closed position at all times, unless in actual use.

(ii) The owner or operator may elect to leave open to the atmosphere the portion of the liquid surface in each tar decanter necessary to permit operation of a sludge conveyor. If the owner or operator elects to maintain an opening on part of the liquid surface of the tar decanter, the owner or operator shall install, operate, and maintain a water leg seal on the tar decanter roof near the sludge discharge chute to ensure enclosure of the major portion of liquid surface not necessary for the operation of the sludge conveyor.

(b) Following the installation of any control equipment used to meet the requirements of paragraph (a) of this section, the owner or operator shall monitor the connections and seals on each control system to determine if it is operating with no detectable emissions, using Method 21 (40 CFR part 60, appendix A) and procedures specified in §61.245(c), and shall visually inspect each source (including sealing materials) and the ductwork of the control system for evidence of visible defects such as gaps or tears. This monitoring and inspection shall be conducted on a semiannual basis and at any other time after the control system is repressurized with blanketing gas following removal of the cover or opening of the access hatch.

(1) If an instrument reading indicates an organic chemical concentration more than 500 ppm above a background concentration, as measured by Method 21, a leak is detected.

(2) If visible defects such as gaps in sealing materials are observed during a visual inspection, a leak is detected.

(3) When a leak is detected, it shall be repaired as soon as practicable, but not later than 15 calendar days after it is detected.

(4) A first attempt at repair of any leak or visible defect shall be made no later than 5 calendar days after each leak is detected.

(c) Following the installation of any control system used to meet the requirements of paragraph (a) of this section, the owner or operator shall conduct a maintenance inspection of the control system on an annual basis for evidence of system abnormalities, such as blocked or plugged lines, sticking valves, plugged condensate traps, and other maintenance defects that could result in abnormal system operation. The owner or operator shall make a first attempt at repair within 5 days, with repair within 15 days of detection.

(d) Each owner or operator of a furnace coke by-product recovery plant also shall comply with the requirements of paragraphs (a)-(c) of this section for each benzene storage tank, BTX storage tank, light-oil storage tank, and excess ammonia-liquor storage tank.

[54 FR 38073, Sept. 14, 1989, as amended at 65 FR 62157, Oct. 17, 2000]

§61.133 Standard: Light-oil sumps.

(a) Each owner or operator of a light-oil sump shall enclose and seal the liquid surface in the sump to form a closed system to contain the emissions.

(1) Except, the owner or operator may elect to install, operate, and maintain a vent on the light-oil sump cover. Each vent pipe must be equipped with a water leg seal, a pressure relief device, or vacuum relief device.

(2) Except, the owner or operator may elect to install, operate, and maintain an access hatch on each light-oil sump cover. Each access hatch must be equipped with a gasket and a cover, seal, or lid that must be kept in a closed position at all times, unless in actual use.

(3) The light-oil sump cover may be removed for periodic maintenance but must be replaced (with seal) at completion of the maintenance operation.

(b) The venting of steam or other gases from the by-product process to the light-oil sump is not permitted.

(c) Following the installation of any control equipment used to meet the requirements of paragraph (a) of this section, the owner or operator shall monitor the connections and seals on each control system to determine if it is operating with no detectable emissions, using Method 21 (40 CFR part 60, appendix A) and the procedures specified in §61.245(c), and shall visually inspect each source (including sealing materials) for evidence of visible defects such as gaps or tears. This monitoring and inspection shall be conducted semiannually and at any other time the cover is removed.

(1) If an instrument reading indicates an organic chemical concentration more than 500 ppm above a background concentration, as measured by Method 21, a leak is detected.

(2) If visible defects such as gaps in sealing materials are observed during a visual inspection, a leak is detected.

(3) When a leak is detected, it shall be repaired as soon as practicable, but not later than 15 calendar days after it is detected.

(4) A first attempt at repair of any leak or visible defect shall be made no later than 5 calendar days after each leak is detected.

[54 FR 38073, Sept. 14, 1989, as amended at 65 FR 62157, Oct. 17, 2000]

§61.134 Standard: Naphthalene processing, final coolers, and final-cooler cooling towers.

(a) No ("zero") emissions are allowed from naphthalene processing, final coolers and final-cooler cooling towers at coke by-product recovery plants.

§61.135 Standard: Equipment leaks.

(a) Each owner or operator of equipment in benzene service shall comply with the requirements of 40 CFR part 61, subpart V, except as provided in this section.

(b) The provisions of §61.242-3 and §61.242-9 of subpart V do not apply to this subpart.

(c) Each piece of equipment in benzene service to which this subpart applies shall be marked in such a manner that it can be distinguished readily from other pieces of equipment in benzene service.

(d) Each exhauster shall be monitored quarterly to detect leaks by the methods specified in §61.245(b) except as provided in §61.136(d) and paragraphs (e)-(g) of this section.

(1) If an instrument reading of 10,000 ppm or greater is measured, a leak is detected.

(2) When a leak is detected, it shall be repaired as soon as practicable, but no later than 15 calendar days after it is detected, except as provided in §61.242-10 (a) and (b). A first attempt at repair shall be made no later than 5 calendar days after each leak is detected.

(e) Each exhauster equipped with a seal system that includes a barrier fluid system and that prevents leakage of process fluids to the atmosphere is exempt from the requirements of paragraph (d) of this section provided the following requirements are met:

(1) Each exhauster seal system is:

(i) Operated with the barrier fluid at a pressure that is greater than the exhauster stuffing box pressure; or

(ii) Equipped with a barrier fluid system that is connected by a closed vent system to a control device that complies with the requirements of §61.242-11; or

(iii) Equipped with a system that purges the barrier fluid into a process stream with zero benzene emissions to the atmosphere.

(2) The barrier fluid is not in benzene service.

(3) Each barrier fluid system shall be equipped with a sensor that will detect failure of the seal system, barrier fluid system, or both.

(4)(i) Each sensor as described in paragraph (e)(3) of this section shall be checked daily or shall be equipped with an audible alarm.

(ii) The owner or operator shall determine, based on design considerations and operating experience, a criterion that indicates failure of the seal system, the barrier fluid system, or both.

(5) If the sensor indicates failure of the seal system, the barrier system, or both (based on the criterion determined under paragraph (e)(4)(ii) of this section), a leak is detected.

(6)(i) When a leak is detected, it shall be repaired as soon as practicable, but not later than 15 calendar days after it is detected, except as provided in §61.242-10.

(ii) A first attempt at repair shall be made no later than 5 calendar days after each leak is detected.

(f) An exhauster is exempt from the requirements of paragraph (d) of this section if it is equipped with a closed vent system capable of capturing and transporting any leakage from the seal or seals to a control device that complies with the requirements of §61.242-11 except as provided in paragraph (g) of this section.

(g) Any exhauster that is designated, as described in §61.246(e) for no detectable emissions, as indicated by an instrument reading of less than 500 ppm above background, is exempt from the requirements of paragraph (d) of this section if the exhauster:

(1) Is demonstrated to be operating with no detectable emissions, as indicated by an instrument reading of less than 500 ppm above background, as measured by the methods specified in §61.245(c); and

(2) Is tested for compliance with paragraph (g)(1) of this section initially upon designation, annually, and at other times requested by the Administrator.

(h) Any exhauster that is in vacuum service is excluded from the requirements of this subpart if it is identified as required in §61.246(e)(5).

§61.136 Compliance provisions and alternative means of emission limitation.

(a) Each owner or operator subject to the provisions of this subpart shall demonstrate compliance with the requirements of §§61.132 through 61.135 for each new and existing source, except as provided under §§61.243-1 and 61.243-2.

(b) Compliance with this subpart shall be determined by a review of records, review of performance test results, inspections, or any combination thereof, using the methods and procedures specified in §61.137.

(c) On the first January 1 after the first year that a plant's annual coke production is less than 75 percent foundry coke, the coke by-product recovery plant becomes a furnace coke by-product recovery plant and shall comply with 61.132(d). Once a plant becomes a furnace coke by-product recovery plant, it will continue to be considered a furnace coke by-product recovery plant, regardless of the coke production in subsequent years.

(d)(1) An owner or operator may request permission to use an alternative means of emission limitation to meet the requirements in §§61.132, 61.133, and 61.135 of this subpart and §§61.242-2, -5, -6, -7, -8, and -11 of subpart V. Permission to use an alternative means of emission limitation shall be requested as specified in §61.12(d).

(2) When the Administrator evaluates requests for permission to use alternative means of emission limitation for sources subject to §§61.132 and 61.133 (except tar decanters) the Administrator shall compare test data for the means of emission limitation to a benzene control efficiency of 98 percent. For tar decanters, the Administrator shall compare test data for the means of emission limitation to a benzene control efficiency of 95 percent.

(3) For any requests for permission to use an alternative to the work practices required under §61.135, the provisions of §61.244(c) shall apply.

§61.137 Test methods and procedures.

(a) Each owner or operator subject to the provisions of this subpart shall comply with the requirements in §61.245 of 40 CFR part 61, subpart V.

(b) To determine whether or not a piece of equipment is in benzene service, the methods in §61.245(d) shall be used, except that, for exhausters, the percent benzene shall be 1 percent by weight, rather than the 10 percent by weight described in §61.245(d).

§61.138 Recordkeeping and reporting requirements.

(a) The following information pertaining to the design of control equipment installed to comply with §§61.132 through 61.134 shall be recorded and kept in a readily accessible location:

(1) Detailed schematics, design specifications, and piping and instrumentation diagrams.

(2) The dates and descriptions of any changes in the design specifications.

(b) The following information pertaining to sources subject to §61.132 and sources subject to §61.133 shall be recorded and maintained for 2 years following each semiannual (and other) inspection and each annual maintenance inspection:

(1) The date of the inspection and the name of the inspector.

(2) A brief description of each visible defect in the source or control equipment and the method and date of repair of the defect.

(3) The presence of a leak, as measured using the method described in §61.245(c). The record shall include the date of attempted and actual repair and method of repair of the leak.

(4) A brief description of any system abnormalities found during the annual maintenance inspection, the repairs made, the date of attempted repair, and the date of actual repair.

(c) Each owner or operator of a source subject to §61.135 shall comply with §61.246.

(d) For foundry coke by-product recovery plants, the annual coke production of both furnace and foundry coke shall be recorded and maintained for 2 years following each determination.

(e)(1) An owner or operator of any source to which this subpart applies shall submit a statement in writing notifying the Administrator that the requirements of this subpart and 40 CFR 61, subpart V, have been implemented.

(2) In the case of an existing source or a new source that has an initial startup date preceding the effective date, the statement is to be submitted within 90 days of the effective date, unless a waiver of compliance is granted under §61.11, along with the information required under §61.10. If a waiver of compliance is granted, the statement is to be submitted on a date scheduled by the Administrator.

(3) In the case of a new source that did not have an initial startup date preceding the effective date, the statement shall be submitted with the application for approval of construction, as described under §61.07.

(4) The statement is to contain the following information for each source:

(i) Type of source (e.g., a light-oil sump or pump).

(ii) For equipment in benzene service, equipment identification number and process unit identification: percent by weight benzene in the fluid at the equipment; and process fluid state in the equipment (gas/vapor or liquid).

(iii) Method of compliance with the standard (e.g., “gas blanketing,” “monthly leak detection and repair,” or “equipped with dual mechanical seals”). This includes whether the plant plans to be a furnace or foundry coke by-product recovery plant for the purposes of §61.132(d).

(f) A report shall be submitted to the Administrator semiannually starting 6 months after the initial reports required in §61.138(e) and §61.10, which includes the following information:

(1) For sources subject to §61.132 and sources subject to §61.133,

(i) A brief description of any visible defect in the source or ductwork,

(ii) The number of leaks detected and repaired, and

(iii) A brief description of any system abnormalities found during each annual maintenance inspection that occurred in the reporting period and the repairs made.

(2) For equipment in benzene service subject to §61.135(a), information required by §61.247(b).

(3) For each exhauster subject to §61.135 for each quarter during the semiannual reporting period,

(i) The number of exhausters for which leaks were detected as described in §61.135 (d) and (e)(5),

(ii) The number of exhausters for which leaks were repaired as required in §61.135 (d) and (e)(6),

(iii) The results of performance tests to determine compliance with §61.135(g) conducted within the semiannual reporting period.

(4) A statement signed by the owner or operator stating whether all provisions of 40 CFR part 61, subpart L, have been fulfilled during the semiannual reporting period.

(5) For foundry coke by-product recovery plants, the annual coke production of both furnace and foundry coke, if determined during the reporting period.

(6) Revisions to items reported according to paragraph (e) of this section if changes have occurred since the initial report or subsequent revisions to the initial report.

NOTE: Compliance with the requirements of §61.10(c) is not required for revisions documented under this paragraph.

(g) In the first report submitted as required in §61.138(e), the report shall include a reporting schedule stating the months that semiannual reports shall be submitted. Subsequent reports shall be submitted according to that schedule unless a revised schedule has been submitted in a previous semiannual report.

(h) An owner or operator electing to comply with the provisions of §§61.243-1 and 61.243-2 shall notify the Administrator of the alternative standard selected 90 days before implementing either of the provisions.

(i) An application for approval of construction or modification, as required under §§61.05(a) and 61.07, will not be required for sources subject to 61.135 if:

(1) The new source complies with §61.135, and

(2) In the next semiannual report required by §61.138(f), the information described in §61.138(e)(4) is reported.

[55 FR 38073, Sept. 14, 1990; 55 FR 14037, Apr. 13, 1990]

§61.139 Provisions for alternative means for process vessels, storage tanks, and tar-intercepting sumps.

(a) As an alternative means of emission limitation for a source subject to §61.132(a)(2) or §61.132(d), the owner or operator may route gases from the source through a closed vent system to a carbon adsorber or vapor incinerator that is at least 98 percent efficient at removing benzene from the gas stream.

(1) The provisions of §61.132(a)(1) and §61.132(a) (2)(i) and (ii) shall apply to the source.

(2) The seals on the source and closed vent system shall be designed and operated for no detectable emissions, as indicated by an instrument reading of less than 500 ppm above background and visual inspections, as determined by the methods specified in §61.245(c).

(3) The provisions of §61.132(b) shall apply to the seals and closed vent system.

(b) For each carbon adsorber, the owner or operator shall adhere to the following practices:

(1) Benzene captured by each carbon adsorber shall be recycled or destroyed in a manner that prevents benzene from being emitted to the atmosphere.

(2) Carbon removed from each carbon adsorber shall be regenerated or destroyed in a manner that prevents benzene from being emitted to the atmosphere.

(3) For each regenerative carbon adsorber, the owner or operator shall initiate regeneration of the spent carbon bed and vent the emissions from the source to a regenerated carbon bed no later than when the benzene concentration or organic vapor concentration level in the adsorber outlet vent reaches the maximum concentration point, as determined in §61.139(h).

(4) For each non-regenerative carbon adsorber, the owner or operator shall replace the carbon at the scheduled replacement time, or as soon as practicable (but not later than 16 hours) after an exceedance of the maximum concentration point is detected, whichever is sooner.

(i) For each non-regenerative carbon adsorber, the scheduled replacement time means the day that is estimated to be 90 percent of the demonstrated bed life, as defined in §61.139(h)(5).

(ii) For each non-regenerative carbon adsorber, an exceedance of the maximum concentration point shall mean any concentration greater than or equal to the maximum concentration point as determined in §61.139(h).

(c) Compliance with the provisions of this section shall be determined as follows:

(1) For each carbon adsorber and vapor incinerator, the owner or operator shall demonstrate compliance with the efficiency limit by a compliance test as specified in §61.13 and §61.139(g). If a waiver of compliance has been granted under §61.11, the deadline for conducting the initial compliance test shall be incorporated into the terms of the waiver. The benzene removal efficiency rate for each carbon adsorber and vapor incinerator shall be calculated as in the following equation:

$$E = \frac{\sum_{i=1}^{n} Q_{bi} C_{bi} - \sum_{j=1}^{m} Q_{aj} C_{aj}}{\sum_{i=1}^{n} Q_{bi} C_{bi}} \times 100$$

Where:

E=percent removal of benzene.

C_{aj}=concentration of benzene in vents after the control device, parts per million (ppm).

C_{bi}=concentration of benzene in vents before the control device, ppm.

Q_{aj} = volumetric flow rate in vents after the control device, standard cubic meters/minute (scm/min) [standard cubic feet/minute (scf/min)].

Q_{bi} = volumetric flow rate in vents before the control device, scm/min (scf/min).

m=number of vents after the control device.

n=number of vents after the control device.

(2) Compliance with all other provisions in this section shall be determined by inspections or the review of records and reports.

(d) For each regenerative carbon adsorber, the owner or operator shall install and operate a monitoring device that continuously indicates and records either the concentration of benzene or the concentration level of organic compounds in the outlet vent of the carbon adsorber. The monitoring device shall be installed, calibrated, maintained and operated in accordance with the manufacturer's specifications.

(1) Measurement of benzene concentration shall be made according to §61.139(g)(2).

(2) All measurements of organic compound concentration levels shall be reasonable indicators of benzene concentration.

(i) The monitoring device for measuring organic compound concentration levels shall be based on one of the following detection principles: Infrared absorption, flame ionization, catalytic oxidation, photoionization, or thermal conductivity.

(ii) The monitoring device shall meet the requirements of part 60, appendix A, Method 21, sections 2, 3, 4.1, 4.2, and 4.4. For the purpose of the application of Method 21 to this section, the words “leak definition” shall be the maximum concentration point, which would be estimated until it is established under §61.139(h). The calibration gas shall either be benzene or methane and shall be at a concentration associated with 125 percent of the expected organic compound concentration level for the carbon adsorber outlet vent.

(e) For each non-regenerative carbon adsorber, the owner or operator shall monitor either the concentration of benzene or the concentration level of organic compounds at the outlet vent of the adsorber. The monitoring device shall be calibrated, operated and maintained in accordance with the manufacturer's specifications.

(1) Measurements of benzene concentration shall be made according to §61.139(g)(2). The measurement shall be conducted over at least one 5-minute interval during which flow into the carbon adsorber is expected to occur.

(2) All measurements of organic compound concentration levels shall be reasonable indicators of benzene concentration.

(i) The monitoring device for measuring organic compound concentration levels shall meet the requirements of paragraphs §61.139(d)(2) (i) and (ii).

(ii) The probe inlet of the monitoring device shall be placed at approximately the center of the carbon adsorber outlet vent. The probe shall be held there for at least 5 minutes during which flow into the carbon adsorber is expected to occur. The maximum reading during that period shall be used as the measurement.

(3) Monitoring shall be performed at least once within the first 7 days after replacement of the carbon bed occurs, and monthly thereafter until 10 days before the scheduled replacement time, at which point monitoring shall be done daily, except as specified in paragraphs (e)(4) and (e)(5) of this section.

(4) If an owner or operator detects an exceedance of the maximum concentration point during the monthly monitoring or on the first day of daily monitoring as prescribed in paragraph (e)(3) of this section, then, after replacing the bed, the owner or operator shall begin the daily monitoring of the replacement carbon bed on the day after the last scheduled monthly monitoring before the exceedance was detected, or 10 days before the exceedance was detected, whichever is longer.

(5) If an owner or operator detects an exceedance of the maximum concentration point during the daily monitoring as prescribed in paragraph (e)(3) of this section, except on the first day, then, after replacing the bed, the owner or

operator shall begin the daily monitoring of the replacement carbon bed 10 days before the exceedance was detected.

(6) If the owner or operator is monitoring on the schedule required in paragraph (e)(4) or paragraph (e)(5) of this section, and the scheduled replacement time is reached without exceeding the maximum concentration point, the owner or operator may return to the monitoring schedule in paragraph (e)(3) of this section for subsequent carbon beds.

NOTE: This note provides an example of the monitoring schedules in paragraphs (e)(3), (e)(4) and (e)(5) of this section. Assume that the scheduled replacement time for a non-regenerative carbon adsorber is the 105th day after installation. According to the monitoring schedule in paragraph (e)(3) of this section, initial monitoring would be done within 7 days after installation, monthly monitoring would be done on the 30th, 60th and 90th days, and daily monitoring would begin on the 95th day after installation. Now assume that an exceedance of the maximum concentration point is detected on the 90th day after installation. On the replacement carbon bed, the owner or operator would begin daily monitoring on the 61st day after installation (i.e., the day after the last scheduled monthly monitoring before the exceedance was detected), according to the requirements in paragraph (e)(4) of this section. If, instead, the exceedance were detected on the first bed on the 95th day, the daily monitoring of the replacement bed would begin on the 85th day after installation (i.e., 10 days before the point in the cycle where the exceedance was detected); this is a second example of the requirements in paragraph (e)(4) of this section. Finally, assume that an exceedance of the maximum concentration point is detected on the 100th day after the first carbon adsorber was installed. According to paragraph (e)(5) of this section, daily monitoring of the replacement bed would begin on the 90th day after installation (i.e., 10 days earlier than when the exceedance was detected on the previous bed). In all of these examples, the initial monitoring of the replacement bed within 7 days of installation and the monthly monitoring would proceed as set out in paragraph (e)(3) of this section until daily monitoring was required.

(f) For each vapor incinerator, the owner or operator shall comply with the monitoring requirements specified below:

(1) Install, calibrate, maintain, and operate according to the manufacturer's specifications a temperature monitoring device equipped with a continuous recorder and having an accuracy of ±1 percent of the temperature being monitored expressed in degrees Celsius or ±0.5 °C, whichever is greater.

(i) Where a vapor incinerator other than a catalytic incinerator is used, the temperature monitoring device shall be installed in the firebox.

(ii) Where a catalytic incinerator is used, temperature monitoring devices shall be installed in the gas stream immediately before and after the catalyst bed.

(2) Comply with paragraph (f)(2)(i), paragraph (f)(2)(ii), or paragraph (f)(3)(iii) of this section.

(i) Install, calibrate, maintain and operate according to the manufacturer's specifications a flow indicator that provides a record of vent stream flow to the incinerator at least once every hour for each source. The flow indicator shall be installed in the vent stream from each source at a point closest to the inlet of each vapor incinerator and before being joined with any other vent stream.

(ii) Install, calibrate, maintain and operate according to the manufacturer's specifications a flow indicator that provides a record of vent stream flow away from the vapor incinerator at least once every 15 minutes. The flow indicator shall be installed in each bypass line, immediately downstream of the valve that, if opened, would divert the vent stream away from the vapor incinerator.

(iii) Where a valve that opens a bypass line is secured in the closed position with a car seal or a lock-and-key configuration, a flow indicator is not required. The owner or operator shall perform a visual inspection at least once every month to check the position of the valve and the condition of the car seal or lock-and-key configuration. The owner or operator shall also record the date and duration of each time that the valve was opened and the vent stream diverted away from the vapor incinerator.

(g) In conducting the compliance tests required in §61.139(c), and measurements specified in §61.139(d)(1), (e)(1) and (h)(3)(ii), the owner or operator shall use as reference methods the test methods and procedures in appendix A to 40 CFR part 60, or other methods as specified in this paragraph, except as specified in §61.13.

(1) For compliance tests, as described in §61.139(c)(1), the following provisions apply.

(i) All tests shall be run under representative emission concentration and vent flow rate conditions. For sources with intermittent flow rates, representative conditions shall include typical emission surges (for example, during the loading of a storage tank).

(ii) Each test shall consist of three separate runs. These runs will be averaged to yield the volumetric flow rates and benzene concentrations in the equation in §61.139(c)(1). Each run shall be a minimum of 1 hour.

(A) For each regenerative carbon adsorber, each run shall take place in one adsorption cycle, to include a minimum of 1 hour of sampling immediately preceding the initiation of carbon bed regeneration.

(B) For each non-regenerative carbon adsorber, all runs can occur during one adsorption cycle.

(iii) The measurements during the runs shall be paired so that the inlet and outlet to the control device are measured simultaneously.

(iv) Method 1 or 1A shall be used as applicable for locating measurement sites.

(v) Method 2, 2A, or 2D shall be used as applicable for measuring vent flow rates.

(vi) Method 18 shall be used for determining the benzene concentrations (C_{aj} and C_{bi}). Either the integrated bag sampling and analysis procedure or the direct interface procedure may be used. A separation column constructed of stainless steel, 1.83 m by 3.2 mm, containing 10 percent 1,2,3-tris (2-cyanoethoxy) propane (TECP) on 80/100 mesh Chromosorb P AW, with a column temperature of 80 °C, a detector temperature of 225 °C, and a flow rate of approximately 20 ml/min, may produce adequate separations. The analyst can use other columns, provided that the precision and accuracy of the analysis of benzene standards is not impaired. The analyst shall have available for review information confirming that there is adequate resolution of the benzene peak.

(A) If the integrated bag sampling and analysis procedure is used, the sample rate shall be adjusted to maintain a constant proportion to vent flow rate.

(B) If the direct interface sampling and analysis procedure is used, then each performance test run shall be conducted in intervals of 5 minutes. For each interval “t,” readings from each measurement shall be recorded, and the flow rate (Q_{aj} or Q_{bi}) and the corresponding benzene concentration (C_{aj} or C_{bi}) shall be determined. The sampling system shall be constructed to include a mixing chamber of a volume equal to 5 times the sampling flow rate per minute. Each analysis performed by the chromatograph will then represent an averaged emission value for a 5-minute time period. The vent flow rate readings shall be timed to account for the total sample system residence time. A dual column, dual detector chromatograph can be used to achieve an analysis interval of 5 minutes. The individual benzene concentrations shall be vent flow rate weighted to determine sample run average concentrations. The individual vent flow rates shall be time averaged to determine sample run average flow rates.

(2) For testing the benzene concentration at the outlet vent of the carbon adsorber as specified under §§61.139(d)(1), (e)(1) and (h)(3)(ii), the following provisions apply.

(i) The measurement shall be conducted over one 5-minute period.

(ii) The requirements in §61.139(g)(1)(i) shall apply to the extent practicable.

(iii) The requirements in §61.139(g)(1)(vi) shall apply. Section 7.2 of method 18 shall be used as described in §61.139(g)(1)(vi)(B) for benzene concentration measurements.

(h) For each carbon adsorber, the maximum concentration point shall be expressed either as a benzene concentration or organic compound concentration level, whichever is to be indicated by the monitoring device chosen under §61.139 (d) or (e).

(1) For each regenerative carbon adsorber, the owner or operator shall determine the maximum concentration point at the following times:

(i) No later than the deadline for the initial compliance test as specified in §61.139(c)(1);

(ii) At the request of the Administrator; and

(iii) At any time chosen by the owner or operator.

(2) For each non-regenerative carbon adsorber, the owner or operator shall determine the maximum concentration point at the following times:

(i) On the first carbon bed to be installed in the adsorber;

(ii) At the request of the Administrator;

(iii) On the next carbon bed after the maximum concentration point has been exceeded (before the scheduled replacement time) for each of three previous carbon beds in the adsorber since the most recent determination; and

(iv) At any other time chosen by the owner or operator.

(3) The maximum concentration point for each carbon adsorber shall be determined through the simultaneous measurement of the outlet of the carbon adsorber with the monitoring device and Method 18, except as allowed in paragraph (h)(4) of this section.

(i) Several data points shall be collected according to a schedule determined by the owner or operator. The schedule shall be designed to take frequent samples near the expected maximum concentration point.

(ii) Each data point shall consist of one 5-minute benzene concentration measurement using Method 18 as specified in §61.139(g)(2), and of a simultaneous measurement by the monitoring device. The monitoring device measurement shall be conducted according to §61.139 (d) or (e), whichever is applicable.

(iii) The maximum concentration point shall be the concentration level, as indicated by the monitoring device, for the last data point at which the benzene concentration is less than 2 percent of the average value of the benzene concentration at the inlet to the carbon adsorber during the most recent compliance test.

(4) If the maximum concentration point is expressed as a benzene concentration, the owner or operator may determine it by calibrating the monitoring device with benzene at a concentration that is 2 percent of the average benzene concentration measured at the inlet to the carbon adsorber during the most recent compliance test. The reading on the monitoring device corresponding to the calibration concentration shall be the maximum concentration point. This method of determination would affect the owner or operator as follows:

(i) For a regenerative carbon adsorber, the owner or operator is exempt from the provisions in paragraph (h)(3) of this section.

(ii) For a non-regenerative carbon adsorber, the owner or operator is required to collect the data points in paragraph (h)(3) of this section with only the monitoring device, and is exempt from the simultaneous Method 18 measurement.

(5) For each non-regenerative carbon adsorber, the demonstrated bed life shall be the carbon bed life, measured in days from the time the bed is installed until the maximum concentration point is reached, for the carbon bed that is used to determine the maximum concentration point.

(i) The following recordkeeping requirements are applicable to owners and operators of control devices subject to §61.139. All records shall be kept updated and in a readily accessible location.

(1) The following information shall be recorded for each control device for the life of the control device:

(i) The design characteristics of the control device and a list of the source or sources vented to it.

(ii) For each carbon absorber, a plan for the method for handling captured benzene and removed carbon to comply with paragraphs (b)(1) and (2) of this section.

(iii) The dates and descriptions of any changes in the design specifications or plan.

(iv) For each carbon adsorber for which organic compounds are monitored as provided under §61.139 (d) and (e), documentation to show that the measurements of organic compound concentrations are reasonable indicators of benzene concentrations.

(2) For each compliance test as specified in §61.139(c)(1), the date of the test, the results of the test, and other data needed to determine emissions shall be recorded as specified in §61.13(g) for at least 2 years or until the next compliance test on the control device, whichever is longer.

(3) For each vapor incinerator, the average firebox temperature of the incinerator (or the average temperature upstream and downstream of the catalyst bed for a catalytic incinerator), measured and averaged over the most recent compliance test shall be recorded for at least 2 years or until the next compliance test on the incinerator, whichever is longer.

(4) For each carbon adsorber, for each determination of a maximum concentration point as specified in §61.139(h), the date of the determination, the maximum concentration point, and data needed to make the determination shall be recorded for at least 2 years or until the next maximum concentration point determination on the carbon adsorber, whichever is longer.

(5) For each carbon absorber, the dates of and data from the monitoring required in §61.139(d) and (e), the date and time of replacement of each carbon bed, the date of each exceedance of the maximum concentration point, and a brief description of the corrective action taken shall be recorded for at least 2 years. Also, the occurrences when the captured benzene or spent carbon are not handled as required in §61.139(b)(1) and (2) shall be recorded for at least 2 years.

(6) For each vapor incinerator, the data from the monitoring required in §61.139(f)(1), the dates of all periods of operation during which the parameter boundaries established during the most recent compliance test are exceeded, and a brief description of the corrective action taken shall be recorded for at least 2 years. A period of operation during which the parameter boundaries are exceeded is a 3-hour period of operation during which:

(i) For each vapor incinerator other than a catalytic incinerator, the average combustion temperature is more than 28 °C (50 °F) below the average combustion temperature during the most recent performance test.

(ii) For each catalytic incinerator, the average temperature of the vent stream immediately before the catalyst bed is more than 28 °C (50 °F) below the average temperature of the vent stream during the most recent performance test, or the average temperature difference across the catalyst bed is less than 80 percent of the average temperature difference across the catalyst bed during the most recent performance test.

(7) For each vapor incinerator, the following shall be recorded for at least 2 years:

(i) If subject to §61.139(f)(2)(i), records of the flow indication, and of all periods when the vent stream is diverted from the vapor incinerator or has no flow rate.

(ii) If subject to §61.139(f)(2)(ii), records of the flow indication, and of all periods when the vent stream is diverted from the vapor incinerator.

(iii) If subject to §61.139(f)(2)(iii), records of the conditions found during each monthly inspection, and of each period when the car seal is broken, when the valve position is changed, or when maintenance on the bypass line valve is performed.

(j) The following reporting requirements are applicable to owners or operators of control devices subject to §61.139:

(1) Compliance tests shall be reported as specified in §61.13(f).

(2) The following information shall be reported as part of the semiannual reports required in §61.138(f).

(i) For each carbon adsorber:

(A) The date and time of detection of each exceedance of the maximum concentration point and a brief description of the time and nature of the corrective action taken.

(B) The date of each time that the captured benzene or removed carbon was not handled as required in §61.139 (b)(1) and (2), and a brief description of the corrective action taken.

(C) The date of each determination of the maximum concentration point, as described in §61.139(h), and a brief reason for the determination.

(ii) For each vapor incinerator, the date and duration of each exceedance of the boundary parameters recorded under §61.139(i)(6) and a brief description of the corrective action taken.

(iii) For each vapor incinerator, the date and duration of each period specified as follows:

(A) Each period recorded under §61.139(i)(7)(i) when the vent stream is diverted from the control device or has no flow rate;

(B) Each period recorded under §61.139(i)(7)(ii) when the vent stream is diverted from the control device; and

(C) Each period recorded under §61.139(i)(7)(iii) when the vent stream is diverted from the control device, when the car seal is broken, when the valve is unlocked, or when the valve position has changed.

(iv) For each vapor incinerator, the owner or operator shall specify the method of monitoring chosen under paragraph (f)(2) of this section in the first semiannual report. Any time the owner or operator changes that choice, he shall specify the change in the first semiannual report following the change.

[56 FR 47407, Sept. 19, 1991, as amended at 64 FR 7467, Feb. 12, 1999; 65 FR 62157, Oct. 17, 2000]

Attachment M
To Part 70 Operating Permit Renewal No. T089-29907-00121

[Downloaded from the eCFR on May 21, 2013]

Electronic Code of Federal Regulations

Title 40: Protection of Environment

40 CFR 61, Subpart V—National Emission Standard for Equipment Leaks (Fugitive Emission Sources)

Source: 49 FR 23513, June 6, 1984, unless otherwise noted.

§ 61.240 Applicability and designation of sources.

(a) The provisions of this subpart apply to each of the following sources that are intended to operate in volatile hazardous air pollutant (VHAP) service: pumps, compressors, pressure relief devices, sampling connection systems, open-ended valves or lines, valves, connectors, surge control vessels, bottoms receivers, and control devices or systems required by this subpart.

(b) The provisions of this subpart apply to the sources listed in paragraph (a) after the date of promulgation of a specific subpart in part 61.

(c) While the provisions of this subpart are effective, a source to which this subpart applies that is also subject to the provisions of 40 CFR part 60 only will be required to comply with the provisions of this subpart.

(d) *Alternative means of compliance* —(1) *Option to comply with part 65.* Owners or operators may choose to comply with 40 CFR part 65 to satisfy the requirements of §§ 61.242-1 through 61.247 for equipment that is subject to this subpart and that is part of the same process unit. When choosing to comply with 40 CFR part 65, the requirements of §§ 61.245(d) and 61.246(i) and (j) still apply. Other provisions applying to owners or operators who choose to comply with 40 CFR part 65 are provided in 40 CFR 65.1.

(2) *Part 65, subpart C or F.* For owners or operators choosing to comply with 40 CFR part 65, each surge control vessel and bottoms receiver subject to this subpart that meets the conditions specified in table 1 or table 2 of this subpart shall meet the requirements for storage vessels in 40 CFR part 65, subpart C; all other equipment subject to this subpart shall meet the requirements in 40 CFR part 65, subpart F.

(3) *Part 61, subpart A.* Owners or operators who choose to comply with 40 CFR part 65, subpart C or F, must also comply with §§ 61.01, 61.02, 61.05 through 61.08, 61.10(b) through (d), 61.11, and 61.15 for that equipment. All sections and paragraphs of subpart A of this part that are not mentioned in this paragraph (d)(3) do not apply to owners or operators of equipment subject to this subpart complying with 40 CFR part 65, subpart C or F, except that provisions required to be met prior to implementing 40 CFR part 65 still apply. Owners and operators who choose to comply with 40 CFR part 65, subpart C or F, must comply with 40 CFR part 65, subpart A.

(4) *Rules referencing this subpart.* Owners or operators referenced to this subpart from subpart F or J of this part may choose to comply with 40 CFR part 65 for all equipment listed in paragraph (a) of this section.

[49 FR 23513, June 6, 1984, as amended at 65 FR 78280, Dec. 14, 2000]

§ 61.241 Definitions.

As used in this subpart, all terms not defined herein shall have the meaning given them in the Act, in subpart A of part 61, or in specific subparts of part 61; and the following terms shall have specific meaning given them:

Bottoms receiver means a tank that collects distillation bottoms before the stream is sent for storage or for further downstream processing.

Closed-vent system means a system that is not open to atmosphere and that is composed of hard-piping, ductwork, connections, and, if necessary, flow-inducing devices that transport gas or vapor from a piece or pieces of equipment to a control device or back to a process.

Connector means flanged, screwed, welded, or other joined fittings used to connect two pipe lines or a pipe line and a piece of equipment. For the purpose of reporting and recordkeeping, connector means flanged fittings that are not covered by insulation or other materials that prevent location of the fittings.

Control device means an enclosed combustion device, vapor recovery system, or flare.

Double block and bleed system means two block valves connected in series with a bleed valve or line that can vent the line between the two block valves.

Duct work means a conveyance system such as those commonly used for heating and ventilation systems. It is often made of sheet metal and often has sections connected by screws or crimping. Hard-piping is not ductwork.

Equipment means each pump, compressor, pressure relief device, sampling connection system, open-ended valve or line, valve, connector, surge control vessel, bottoms receiver in VHAP service, and any control devices or systems required by this subpart.

First attempt at repair means to take rapid action for the purpose of stopping or reducing leakage of organic material to atmosphere using best practices.

In gas/vapor service means that a piece of equipment contains process fluid that is in the gaseous state at operating conditions.

Fuel gas means gases that are combusted to derive useful work or heat.

Fuel gas system means the offsite and onsite piping and flow and pressure control system that gathers gaseous stream(s) generated by onsite operations, may blend them with other sources of gas, and transports the gaseous stream for use as fuel gas in combustion devices or in-process combustion equipment, such as furnaces and gas turbines, either singly or in combination.

Hard-piping means pipe or tubing that is manufactured and properly installed using good engineering judgement and standards such as ASME B31.3, Process Piping (available from the American Society of Mechanical Engineers, PO Box 2900, Fairfield, NJ 07007-2900).

In liquid service means that a piece of equipment is not in gas/vapor service.

In-situ sampling systems means nonextractive samplers or in-line samplers.

In vacuum service means that equipment is operating at an internal pressure which is at least 5 kilopascals (kPa) (0.7 psia) below ambient pressure.

In VHAP service means that a piece of equipment either contains or contacts a fluid (liquid or gas) that is at least 10 percent by weight a volatile hazardous air pollutant (VHAP) as determined according to the provisions of § 61.245(d). The provisions of § 61.245(d) also specify how to determine that a piece of equipment is not in VHAP service.

In VOC service means, for the purposes of this subpart, that (a) the piece of equipment contains or contacts a process fluid that is at least 10 percent VOC by weight (see 40 CFR 60.2 for the definition of volatile organic compound or VOC and 40 CFR 60.485(d) to determine whether a piece of equipment is not in VOC service) and (b) the piece of equipment is not in heavy liquid service as defined in 40 CFR 60.481.

Maximum true vapor pressure means the equilibrium partial pressure exerted by the total VHAP in the stored or transferred liquid at the temperature equal to the highest calendar-month average of the liquid storage or transfer temperature for liquids stored or transferred above or below the ambient temperature or at the local maximum

monthly average temperature as reported by the National Weather Service for liquids stored or transferred at the ambient temperature, as determined:

(1) In accordance with methods described in American Petroleum Institute Publication 2517, Evaporative Loss From External Floating-Roof Tanks (incorporated by reference as specified in § 61.18); or

(2) As obtained from standard reference texts; or

(3) As determined by the American Society for Testing and Materials Method D2879-83, Standard Test Method for Vapor Pressure-Temperature Relationship and Initial Decomposition Temperature of Liquids by Isoteniscope (incorporated by reference as specified in § 61.18); or

(4) Any other method approved by the Administrator.

Open-ended valve or line means any valve, except pressure relief valves, having one side of the valve seat in contact with process fluid and one side open to atmosphere, either directly or through open piping.

Pressure release means the emission of materials resulting from the system pressure being greater than the set pressure of the pressure relief device.

Process unit means equipment assembled to produce a VHAP or its derivatives as intermediates or final products, or equipment assembled to use a VHAP in the production of a product. A process unit can operate independently if supplied with sufficient feed or raw materials and sufficient product storage facilities.

Process unit shutdown means a work practice or operational procedure that stops production from a process unit or part of a process unit. An unscheduled work practice or operational procedure that stops production from a process unit or part of a process unit for less than 24 hours is not a process unit shutdown. The use of spare equipment and technically feasible bypassing of equipment without stopping production are not process unit shutdowns.

Repaired means that equipment is adjusted, or otherwise altered, to eliminate a leak.

Sampling connection system means an assembly of equipment within a process unit used during periods of representative operation to take samples of the process fluid. Equipment used to take non-routine grab samples is not considered a sampling connection system.

Semiannual means a 6-month period; the first semiannual period concludes on the last day of the last month during the 180 days following initial startup for new sources; and the first semiannual period concludes on the last day of the last full month during the 180 days after the effective date of a specific subpart that references this subpart for existing sources.

Sensor means a device that measures a physical quantity or the change in a physical quantity, such as temperature, pressure, flow rate, pH, or liquid level.

Stuffing box pressure means the fluid (liquid or gas) pressure inside the casing or housing of a piece of equipment, on the process side of the inboard seal.

Surge control vessel means feed drums, recycle drums, and intermediate vessels. Surge control vessels are used within a process unit when in-process storage, mixing, or management of flow rates of volumes is needed on a recurring or ongoing basis to assist in production of a product.

Volatile hazardous air pollutant or *VHAP* means a substance regulated under this part for which a standard for equipment leaks of the substance has been proposed and promulgated. Benzene is a VHAP. Vinyl chloride is a VHAP.

[49 FR 23513, June 6, 1984; 49 FR 38946, Oct. 2, 1984, as amended at 51 FR 34915, Sept. 30, 1986; 54 FR 38076, Sept. 14, 1989; 65 FR 62158, Oct. 17, 2000; 65 FR 78280, Dec. 14, 2000]

§ 61.242-1 Standards: General.

(a) Each owner or operator subject to the provisions of this subpart shall demonstrate compliance with the requirements of §§ 61.242-1 to 61.242-11 for each new and existing source as required in 40 CFR 61.05, except as provided in §§ 61.243 and 61.244.

(b) Compliance with this subpart will be detemined by review of records, review of performance test results, and inspection using the methods and procedures specified in § 61.245.

(c)(1) An owner or operator may request a determination of alternative means of emission limitation to the requirements of §§ 61.242-2, 61.242-3, 61.242-5, 61.242-6, 61.242-7, 61.242-8, 61.242-9 and 61.242-11 as provided in § 61.244.

(2) If the Administrator makes a determination that a means of emission limitation is at least a permissible alternative to the requirements of § 61.242-2, 61.242-3, 61.242-5, 61.242-6, 61.242-7, 61.242-8, 61.242-9 or 61.242-11, an owner or operator shall comply with the requirements of that determination.

(d) Each piece of equipment to which this subpart applies shall be marked in such a manner that it can be distinquished readily from other pieces of equipment.

(e) Equipment that is in vacuum service is excluded from the requirements of § 61.242-2, to § 61.242-11 if it is identified as required in § 61.246(e)(5).

[49 FR 23513, June 6, 1984; 49 FR 38946, Oct. 2, 1984]

§ 61.242-2 Standards: Pumps.

(a)(1) Each pump shall be monitored monthly to detect leaks by the methods specified in § 61.245(b), except as provided in § 61.242-1(c) and paragraphs (d), (e), (f) and (g) of this section.

(2) Each pump shall be checked by visual inspection each calendar week for indications of liquids dripping from the pump seal.

(b)(1) If an instrument reading of 10,000 ppm or greater is measured, a leak is detected.

(2) If there are indications of liquids dripping from the pump seal, a leak is detected.

(c)(1) When a leak is detected, it shall be repaired as soon as practicable, but not later than 15 calendar days after it is detected, except as provided in § 61.242-10.

(2) A first attempt at repair shall be made no later than 5 calendar days after each leak is detected.

(d) Each pump equipped with a dual mechanical seal system that includes a barrier fluid system is exempt from the requirements of paragraphs (a) and (b) of this section, provided the following requirements are met:

(1) Each dual mechanical seal system is:

(i) Operated with the barrier fluid at a pressure that is at all times greater than the pump stuffing box pressure; or

(ii) Equipped with a barrier fluid degassing reservoir that is routed to a process or fuel gas system or connected by a closed-vent system to a control device that complies with the requirements of § 61.242-11; or

(iii) Equipped with a system that purges the barrier fluid into a process stream with zero VHAP emissions to atmosphere.

(2) The barrier fluid is not in VHAP service and, if the pump is covered by standards under 40 CFR part 60, is not in VOC service.

(3) Each barrier fluid system is equipped with a sensor that will detect failure of the seal system, the barrier fluid system, or both.

(4) Each pump is checked by visual inspection each calendar week for indications of liquids dripping from the pump seal.

(i) If there are indications of liquid dripping from the pump seal at the time of the weekly inspection, the pump shall be monitored as specified in § 61.245 to determine the presence of VOC and VHAP in the barrier fluid.

(ii) If the monitor reading (taking into account any background readings) indicates the presence of VHAP, a leak is detected. For the purpose of this paragraph, the monitor may be calibrated with VHAP, or may employ a gas chromatography column to limit the response of the monitor to VHAP, at the option of the owner or operator.

(iii) If an instrument reading of 10,000 ppm or greater (total VOC) is measured, a leak is detected.

(5) Each sensor as described in paragraph (d)(3) of this section is checked daily or is equipped with an audible alarm.

(6)(i) The owner or operator determines, based on design considerations and operating experience, criteria applicable to the presence and frequency of drips and to the sensor that indicates failure of the seal system, the barrier fluid system, or both.

(ii) If indications of liquids dripping from the pump seal exceed the criteria established in paragraph (d)(6)(i) of this section, or if, based on the criteria established in paragraph (d)(6)(i) of this section, the sensor indicates failure of the seal system, the barrier fluid system, or both, a leak is detected.

(iii) When a leak is detected, it shall be repaired as soon as practicable, but no later than 15 calendar days after it is detected, except as provided in § 61.242-10.

(iv) A first attempt at repair shall be made no later than five calendar days after each leak is detected.

(e) Any pump that is designated, as described in § 61.246(e)(2), for no detectable emissions, as indicated by an instrument reading of less than 500 ppm above background, is exempt from the requirements of paragraphs (a), (c), and (d) if the pump:

(1) Has no externally actuated shaft penetrating the pump housing,

(2) Is demonstrated to be operating with no detectable emissions, as indicated by an instrument reading of less than 500 ppm above background, as measured by the method specified in § 61.245(c), and

(3) Is tested for compliance with paragraph (e)(2) initially upon designation, annually, and at other times requested by the Administrator.

(f) If any pump is equipped with a closed-vent system capable of capturing and transporting any leakage from the seal or seals to a process or fuel gas system or to a control device that complies with the requirements of § 61.242-11, it is exempt from the requirements of paragraphs (a) through (e) of this section.

(g) Any pump that is designated, as described in § 61.246(f)(1), as an unsafe-to-monitor pump is exempt from the monitoring and inspection requirements of paragraphs (a) and (d)(4) through (6) of this section if:

(1) The owner or operator of the pump demonstrates that the pump is unsafe-to-monitor because monitoring personnel would be exposed to an immediate danger as a consequence of complying with paragraph (a) of this section; and

(2) The owner or operator of the pump has a written plan that requires monitoring of the pump as frequently as practicable during safe-to-monitor times but not more frequently than the periodic monitoring schedule otherwise applicable, and repair of the equipment according to the procedures in paragraph (c) of this section if a leak is detected.

(h) Any pump that is located within the boundary of an unmanned plant site is exempt from the weekly visual inspection requirement of paragraphs (a)(2) and (d)(4) of this section, and the daily requirements of paragraph (d)(5) of this section, provided that each pump is visually inspected as often as practicable and at least monthly.

[49 FR 23513, June 6, 1984, as amended at 49 FR 38946, Oct. 2, 1984; 55 FR 28349, July 10, 1990; 65 FR 78281, Dec. 14, 2000]

§ 61.242-3 Standards: Compressors.

(a) Each compressor shall be equipped with a seal system that includes a barrier fluid system and that prevents leakage of process fluid to atmosphere, except as provided in § 61.242-1(c) and paragraphs (h) and (i) of this section.

(b) Each compressor seal system as required in paragraph (a) shall be:

(1) Operated with the barrier fluid at a pressure that is greater than the compressor stuffing box pressure; or

(2) Equipped with a barrier fluid system degassing reservoir that is routed to a process or fuel gas system or connected by a closed-vent system to a control device that complies with the requirements of § 61.242-11; or

(3) Equipped with a system that purges the barrier fluid into a process stream with zero VHAP emissions to atmosphere.

(c) The barrier fluid shall not be in VHAP service and, if the compressor is covered by standards under 40 CFR part 60, shall not be in VOC service.

(d) Each barrier fluid system as described in paragraphs (a)-(c) of this section shall be equipped with a sensor that will detect failure of the seal system, barrier fluid system, or both.

(e)(1) Each sensor as required in paragraph (d) of this section shall be checked daily or shall be equipped with an audible alarm unless the compressor is located within the boundary of an unmanned plant site.

(2) The owner or operator shall determine, based on design considerations and operating experience, a criterion that indicates failure of the seal system, the barrier fluid system, or both.

(f) If the sensor indicates failure of the seal system, the barrier fluid system, or both based on the criterion determined under paragraph (e)(2) of this section, a leak is detected.

(g)(1) When a leak is detected, it shall be repaired as soon as practicable, but not later than 15 calendar days after it is detected, except as provided in § 61.242-10.

(2) A first attempt at repair shall be made no later than 5 calendar days after eack leak is detected.

(h) A compressor is exempt from the requirements of paragraphs (a) and (b) of this section if it is equipped with a closed-vent system to capture and transport leakage from the compressor drive shaft back to a process or fuel gas system or to a control device that complies with the requirements of § 61.242-11, except as provided in paragraph (i) of this section.

(i) Any Compressor that is designated, as described in § 61.246(e)(2), for no detectable emission as indicated by an instrument reading of less than 500 ppm above background is exempt from the requirements of paragraphs (a)-(h) if the compressor:

(1) Is demonstrated to be operating with no detectable emissions, as indicated by an instrument reading of less than 500 ppm above background, as measured by the method specified in § 61.245(c); and

(2) Is tested for compliance with paragraph (i)(1) initially upon designation, annually, and at other times requested by the Administrator.

[49 FR 23513, June 6, 1984; 49 FR 38946, Oct. 2, 1984, as amended at 65 FR 78281, Dec. 14, 2000]

§ 61.242-4 Standards: Pressure relief devices in gas/vapor service.

(a) Except during pressure releases, each pressure relief device in gas/vapor service shall be operated with no detectable emissions, as indicated by an instrument reading of less than 500 ppm above background, as measured by the method specified in § 61.245(c).

(b)(1) After each pressure release, the pressure relief device shall be returned to a condition of no detectable emissions, as indicated by an instrument reading of less than 500 ppm above background, as soon as practicable, but no later than 5 calendar days after each pressure release, except as provided in § 61.242-10.

(2) No later than 5 calendar days after the pressure release, the pressure relief device shall be monitored to confirm the condition of no detectable emissions, as indicated by an instrument reading of less than 500 ppm above background, as measured by the method specified in § 61.245(c).

(c) Any pressure relief device that is routed to a process or fuel gas system or equipped with a closed-vent system capable of capturing and transporting leakage from the pressure relief device to a control device as described in § 61.242-11 is exempt from the requirements of paragraphs (a) and (b) of this section.

(d)(1) Any pressure relief device that is equipped with a rupture disk upstream of the pressure relief device is exempt from the requirements of paragraphs (a) and (b) of this section, provided the owner or operator complies with the requirements in paragraph (d)(2) of this section.

(2) After each pressure release, a new rupture disk shall be installed upstream of the pressure relief device as soon as practicable, but no later than 5 calendar days after each pressure release, except as provided in § 61.242-10.

[49 FR 23513, June 6, 1984; 49 FR 38946, Oct. 2, 1984, as amended at 65 FR 78281, Dec. 14, 2000]

§ 61.242-5 Standards: Sampling connecting systems.

(a) Each sampling connection system shall be equipped with a closed-purge, closed-loop, or closed vent system, except as provided in § 61.242-1(c). Gases displaced during filling of the sample container are not required to be collected or captured.

(b) Each closed-purge, closed-loop, or closed vent system as required in paragraph (a) of this section shall comply with the requirements specified in paragraphs (b)(1) through (4) of this section:

(1) Return the purged process fluid directly to the process line; or

(2) Collect and recycle the purged process fluid; or

(3) Be designed and operated to capture and transport all the purged process fluid to a control device that complies with the requirements of § 61.242-11; or

(4) Collect, store, and transport the purged process fluid to any of the following systems or facilities:

(i) A waste management unit as defined in 40 CFR 63.111 if the waste management unit is subject to and operated in compliance with the provisions of 40 CFR part 63, subpart G, applicable to Group 1 wastewater streams; or

(ii) A treatment, storage, or disposal facility subject to regulation under 40 CFR part 262, 264, 265, or 266; or

(iii) A facility permitted, licensed, or registered by a State to manage municipal or industrial solid waste, if the process fluids are not hazardous waste as defined in 40 CFR part 261.

(c) In-situ sampling systems and sampling systems without purges are exempt from the requirements of paragraphs (a) and (b) of this section.

[65 FR 78281, Dec. 14, 2000]

§ 61.242-6 Standards: Open-ended valves or lines.

(a)(1) Each open-ended valve or line shall be equipped with a cap, blind flange, plug, or a second valve, except as provided in § 61.242-1(c).

(2) The cap, blind flange, plug, or second valve shall seal the open end at all times except during operations requiring process fluid flow through the open-ended valve or line.

(b) Each open-ended valve or line equipped with a second valve shall be operated in a manner such that the valve on the process fluid end is closed before the second valve is closed.

(c) When a double block and bleed system is being used, the bleed valve or line may remain open during operations that require venting the line between the block valves but shall comply with paragraph (a) at all other times.

(d) Open-ended valves or lines in an emergency shutdown system which are designed to open automatically in the event of a process upset are exempt from the requirements of paragraphs (a), (b) and (c) of this section.

(e) Open-ended valves or lines containing materials which would autocatalytically polymerize or would present an explosion, serious overpressure, or other safety hazard if capped or equipped with a double block and bleed system as specified in paragraphs (a) through (c) of this section are exempt from the requirements of paragraphs (a) through (c) of this section.

[49 FR 23513, June 6, 1984, as amended at 65 FR 78282, Dec. 14, 2000]

§ 61.242-7 Standards: Valves.

(a) Each valve shall be monitored monthly to detect leaks by the method specified in § 61.245(b) and shall comply with paragraphs (b)-(e), except as provided in paragraphs (f), (g), and (h) of this section, § 61.243-1 or § 61.243-2, and § 61.242-1(c).

(b) If an instrument reading of 10,000 ppm or greater is measured, a leak is detected.

(c)(1) Any valve for which a leak is not detected for 2 successive months may be monitored the first month of every quarter, beginning with the next quarter, until a leak is detected.

(2) If a leak is detected, the valve shall be monitored monthly until a leak is not detected for 2 successive months.

(d)(1) When a leak is detected, it shall be repaired as soon as practicable, but no later than 15 calendar days after the leak is detected, except as provided in § 61.242-10.

(2) A first attempt at repair shall be made no later than 5 calendar days after each leak is detected.

(e) First attempts at repair include, but are not limited to, the following best practices where practicable:

(1) Tightening of bonnet bolts;

(2) Replacement of bonnet bolts;

(3) Tightening of packing gland nuts; and

(4) Injection of lubricant into lubricated packing.

(f) Any valve that is designated, as described in § 61.246(e)(2), for no detectable emissions, as indicated by an instrument reading of less than 500 ppm above background, is exempt from the requirements of paragraph (a) if the valve:

(1) Has no external actuating mechanism in contact with the process fluid;

(2) Is operated with emissions less than 500 ppm above background, as measured by the method specified in § 61.245(c); and

(3) Is tested for compliance with paragraph (f)(2) initially upon designation, annually, and at other times requested by the Administrator.

(g) Any valve that is designated, as described in § 61.246(f)(1), as an unsafe-to-monitor valve is exempt from the requirements of paragraph (a) if:

(1) The owner or operator of the valve demonstrates that the valve is unsafe to monitor because monitoring personnel would be exposed to an immediate danger as a consequence of complying with paragraph (a); and

(2) The owner or operator of the valve has a written plan that requires monitoring of the valve as frequent as practicable during safe-to-monitor times.

(h) Any valve that is designated, as described in § 61.246(f)(2), as a difficult-to-monitor valve is exempt from the requirements of paragraph (a) if:

(1) The owner or operator of the valve demonstrates that the valve cannot be monitored without elevating the monitoring personnel more than 2 meters above a support surface;

(2) The process unit within which the valve is located is an existing process unit; and

(3) The owner or operator of the valve follows a written plan that requires monitoring of the valve at least once per calendar year.

§ 61.242-8 Standards: Pressure relief services in liquid service and connectors.

(a) If evidence of a potential leak is found by visual, audible, olfactory, or any other detection method at pressure relief devices in liquid service and connectors, the owner or operator shall follow either one of the following procedures, except as provided in § 61.242-1(c):

(1) The owner or operator shall monitor the equipment within 5 days by the method specified in § 61.245(b) and shall comply with the requirements of paragraphs (b) through (d) of this section.

(2) The owner or operator shall eliminate the visual, audible, olfactory, or other indication of a potential leak.

(b) If an instrument reading of 10,000 ppm or greater is measured, a leak is detected.

(c)(1) When a leak is detected, it shall be repaired as soon as practicable, but not later than 15 calendar days after it is detected, except as provided in § 61.242-10.

(2) The first attempt at repair shall be made no later than 5 calendar days after each leak is detected.

(d) First attempts at repair include, but are not limited to, the best practices described under § 61.242-7(e).

[49 FR 23513, June 6, 1984; 49 FR 38946, Oct. 2, 1984, as amended at 65 FR 78282, Dec. 14, 2000]

§ 61.242-9 Standards: Surge control vessels and bottoms receivers.

Each surge control vessel or bottoms receiver that is not routed back to the process and that meets the conditions specified in table 1 or table 2 of this subpart shall be equipped with a closed-vent system capable of capturing and transporting any leakage from the vessel back to the process or to a control device as described in § 61.242-11, except as provided in § 61.242-1(c); or comply with the requirements of 40 CFR 63.119(b) or (c).

[65 FR 78282, Dec. 14, 2000]

§ 61.242-10 Standards: Delay of repair.

(a) Delay of repair of equipment for which leaks have been detected will be allowed if repair within 15 days is technically infeasible without a process unit shutdown. Repair of this equipment shall occur before the end of the next process unit shutdown.

(b) Delay of repair of equipment for which leaks have been detected will be allowed for equipment that is isolated from the process and that does not remain in VHAP service.

(c) Delay of repair for valves will be allowed if:

(1) The owner or operator demonstrates that emissions of purged material resulting from immediate repair are greater than the fugitive emissions likely to result from delay of repair, and

(2) When repair procedures are effected, the purged material is collected and destroyed or recovered in a control device complying with § 61.242-11.

(d) Delay of repair for pumps will be allowed if:

(1) Repair requires the use of a dual mechanical seal system that includes a barrier fluid system, and

(2) Repair is completed as soon as practicable, but not later than 6 months after the leak was detected.

(e) Delay of repair beyond a process unit shutdown will be allowed for a valve if valve assembly replacement is necessary during the process unit shutdown, valve assembly supplies have been depleted, and valve assembly supplies had been sufficiently stocked before the supplies were depleted. Delay of repair beyond the next process unit shutdown will not be allowed unless the next process unit shutdown occurs sooner than 6 months after the first process unit shutdown.

[49 FR 23513, June 6, 1984, as amended at 65 FR 78282, Dec. 14, 2000]

§ 61.242-11 Standards: Closed-vent systems and control devices.

(a) Owners or operators of closed-vent systems and control devices used to comply with provisions of this subpart shall comply with the provisions of this section, except as provided in § 61.242-1(c).

(b) Vapor recovery systems (for example, condensers and absorbers) shall be designed and operated to recover the organic vapors vented to them with an efficiency of 95 percent or greater, or to an exit concentration of 20 parts per million by volume, whichever is less stringent.

(c) Enclosed combustion devices shall be designed and operated to reduce the VHAP emissions vented to them with an efficiency of 95 percent or greater, or to an exit concentration of 20 parts per million by volume, on a dry basis,

corrected to 3 percent oxygen, whichever is less stringent, or to provide a minimum residence time of 0.50 seconds at a minimum temperature of 760 °C.

(d) Flares shall used to comply with this subpart shall comply with the requirements of § 60.18.

(e) Owners or operators of control devices that are used to comply with the provisions of this subpart shall monitor these control devices to ensure that they are operated and maintained in conformance with their design.

(f) Except as provided in paragraphs (i) through (k) of this section, each closed vent system shall be inspected according to the procedures and schedule specified in paragraph (f)(1) or (2) of this section, as applicable.

(1) If the vapor collection system or closed vent system is constructed of hard-piping, the owner or operator shall comply with the following requirements:

(i) Conduct an initial inspection according to the procedures in § 61.245(b); and

(ii) Conduct annual visual inspections for visible, audible, or olfactory indications of leaks.

(2) If the vapor collection system or closed vent system is constructed of ductwork, the owner or operator shall:

(i) Conduct an initial inspection according to the procedures in § 61.245(b); and

(ii) Conduct annual inspections according to the procedures in § 61.245(b).

(g) Leaks, as indicated by an instrument reading greater than 500 parts per million by volume above background or by visual inspections, shall be repaired as soon as practicable except as provided in paragraph (h) of this section.

(1) A first attempt at repair shall be made no later than 5 calendar days after the leak is detected.

(2) Repair shall be completed no later than 15 calendar days after the leak is detected.

(h) Delay of repair of a closed vent system for which leaks have been detected is allowed if the repair is technically infeasible without a process unit shutdown, or if the owner or operator determines that emissions resulting from immediate repair would be greater than the fugitive emissions likely to result from delay of repair. Repair of such equipment shall be complete by the end of the next process unit shutdown.

(i) If a vapor collection system or closed vent system is operated under a vacuum, it is exempt from the inspection requirements of paragraphs (f)(1)(i) and (2) of this section.

(j) Any parts of the closed vent system that are designated, as described in paragraph (l)(1) of this section, as unsafe-to-inspect are exempt from the inspection requirements of paragraphs (f)(1)(i) and (2) of this section if they comply with the following requirements:

(1) The owner or operator determines that the equipment is unsafe-to-inspect because inspecting personnel would be exposed to an imminent or potential danger as a consequence of complying with paragraph (f)(1)(i) or (2) of this section; and

(2) The owner or operator has a written plan that requires inspection of the equipment as frequently as practicable during safe-to-inspect times.

(k) Any parts of the closed vent system that are designated, as described in paragraph (l)(2) of this section, as difficult-to-inspect are exempt from the inspection requirements of paragraphs (f)(1)(i) and (2) of this section if they comply with the following requirements:

(1) The owner or operator determines that the equipment cannot be inspected without elevating the inspecting personnel more than 2 meters above a support surface; and

(2) The owner or operator has a written plan that requires inspection of the equipment at least once every 5 years. A closed vent system is exempt from inspection if it is operated under a vacuum.

(l) The owner or operator shall record the following information:

(1) Identification of all parts of the closed vent system that are designated as unsafe-to-inspect, an explanation of why the equipment is unsafe-to-inspect, and the plan for inspecting the equipment.

(2) Identification of all parts of the closed vent system that are designated as difficult-to-inspect, an explanation of why the equipment is difficult-to-inspect, and the plan for inspecting the equipment.

(3) For each inspection during which a leak is detected, a record of the information specified in § 61.246(c).

(4) For each inspection conducted in accordance with § 61.245(b) during which no leaks are detected, a record that the inspection was performed, the date of the inspection, and a statement that no leaks were detected.

(5) For each visual inspection conducted in accordance with paragraph (f)(1)(ii) of this section during which no leaks are detected, a record that the inspection was performed, the date of the inspection, and a statement that no leaks were detected.

(m) Closed vent systems and control devices used to comply with provisions of this subpart shall be operated at all times when emissions may be vented to them.

[49 FR 23513, June 6, 1984; 49 FR 38946, Oct. 2, 1984, as amended at 51 FR 2702, Jan. 21, 1986; 65 FR 62158, Oct. 17, 2000; 65 FR 78282, Dec. 14, 2000]

§ 61.243-1 Alternative standards for valves in VHAP service—allowable percentage of valves leaking.

(a) An owner or operator may elect to have all valves within a process unit to comply with an allowable percentage of valves leaking of equal to or less than 2.0 percent.

(b) The following requirements shall be met if an owner or operator decides to comply with an allowable percentage of valves leaking:

(1) An owner or operator must notify the Administrator that the owner or operator has elected to have all valves within a process unit to comply with the allowable percentage of valves leaking before implementing this alternative standard, as specified in § 61.247(d).

(2) A performance test as specified in paragraph (c) of this section shall be conducted initially upon designation, annually, and at other times requested by the Administrator.

(3) If a valve leak is detected, it shall be repaired in accordance with § 61.242-7(d) and (e).

(c) Performance tests shall be conducted in the following manner:

(1) All valves in VHAP service within the process unit shall be monitored within 1 week by the methods specified in § 61.245(b).

(2) If an instrument reading of 10,000 ppm or greater is measured, a leak is detected.

(3) The leak percentage shall be determined by dividing the number of valves in VHAP service for which leaks are detected by the number of valves in VHAP service within the process unit.

(d) Owner or operators who elect to have all valves comply with this alternative standard shall not have a process unit with a leak percentage greater than 2.0 percent.

(e) If an owner or operator decides no longer to comply with § 61.243-1, the owner or operator must notify the Administrator in writing that the work practice standard described in § 61.242-7(a)-(e) will be followed.

§ 61.243-2 Alternative standards for valves in VHAP service—skip period leak detection and repair.

(a)(1) An owner or operator may elect for all valves within a process unit to comply with one of the alternative work practices specified in paragraphs (b)(2) and (3) of this section.

(2) An owner or operator must notify the Administrator before implementing one of the alternative work practices, as specified in § 61.247(d).

(b)(1) An owner or operator shall comply initially with the requirements for valves, as described in § 61.242-7.

(2) After 2 consecutive quarterly leak detection periods with the percentage of valves leaking equal to or less than 2.0, an owner or operator may begin to skip one of the quarterly leak detection periods for the valves in VHAP service.

(3) After five consecutive quarterly leak detection periods with the percentage of valves leaking equal to or less than 2.0, an owner or operator may begin to skip three of the quarterly leak detection periods for the valves in VHAP service.

(4) If the percentage of valves leaking is greater than 2.0, the owner or operator shall comply with the requirements as described in § 61.242-7 but may again elect to use this section.

[49 FR 23513, June 6, 1984, as amended at 65 FR 62158, Oct. 17, 2000]

§ 61.244 Alternative means of emission limitation.

(a) Permission to use an alternative means of emission limitation under section 112(e)(3) of the Clean Air Act shall be governed by the following procedures:

(b) Where the standard is an equipment, design, or operational requirement:

(1) Each owner or operator applying for permission shall be responsible for collecting and verifying test data for an alternative means of emission limitation to test data for the equipment, design, and operational requirements.

(2) The Administrator may condition the permission on requirements that may be necessary to assure operation and maintenance to achieve the same emission reduction as the equipment, design, and operational requirements.

(c) Where the standard is a work practice:

(1) Each owner or operator applying for permission shall be responsible for collecting and verifying test data for an alternative means of emission limitation.

(2) For each source for which permission is requested, the emission reduction achieved by the required work practices shall be demonstrated for a minimum period of 12 months.

(3) For each source for which permission is requested, the emission reduction achieved by the alternative means of emission limitation shall be demonstrated.

(4) Each owner or operator applying for permission shall commit in writing each source to work practices that provide for emission reductions equal to or greater than the emission reductions achieved by the required work practices.

(5) The Administrator will compare the demonstrated emission reduction for the alternative means of emission limitation to the demonstrated emission reduction for the required work practices and will consider the commitment in paragraph (c)(4).

(6) The Administrator may condition the permission on requirements that may be necessary to assure operation and maintenance to achieve the same emission reduction as the required work practices of this subpart.

(d) An owner or operator may offer a unique approach to demonstrate the alternative means of emission limitation.

(e)(1) Manufacturers of equipment used to control equipment leaks of a VHAP may apply to the Administrator for permission for an alternative means of emission limitation that achieves a reduction in emissions of the VHAP achieved by the equipment, design, and operational requirements of this subpart.

(2) The Administrator will grant permission according to the provisions of paragraphs (b), (c), and (d).

[49 FR 23513, June 6, 1984, as amended at 65 FR 62158, Oct. 17, 2000]

§ 61.245 Test methods and procedures.

(a) Each owner or operator subject to the provisions of this subpart shall comply with the test methods and procedures requirements provided in this section.

(b) Monitoring, as required in §§ 61.242, 61.243, 61.244, and 61.135, shall comply with the following requirements:

(1) Monitoring shall comply with Method 21 of appendix A of 40 CFR part 60.

(2) The detection instrument shall meet the performance criteria of Method 21.

(3) The instrument shall be calibrated before use on each day of its use by the procedures specified in Method 21.

(4) Calibration gases shall be:

(i) Zero air (less than 10 ppm of hydrocarbon in air); and

(ii) A mixture of methane or n-hexane and air at a concentration of approximately, but less than, 10,000 ppm methane or n-hexane.

(5) The instrument probe shall be traversed around all potential leak interfaces as close to the interface as possible as described in Method 21.

(c) When equipment is tested for compliance with or monitored for no detectable emissions, the owner or operator shall comply with the following requirements:

(1) The requirements of paragraphs (b) (1) through (4) shall apply.

(2) The background level shall be determined, as set forth in Method 21.

(3) The instrument probe shall be traversed around all potential leak interfaces as close to the interface as possible as described in Method 21.

(4) The arithmetic difference between the maximum concentration indicated by the instrument and the background level is compared with 500 ppm for determining compliance.

(d)(1) Each piece of equipment within a process unit that can conceivably contain equipment in VHAP service is presumed to be in VHAP service unless an owner or operator demonstrates that the piece of equipment is not in

VHAP service. For a piece of equipment to be considered not in VHAP service, it must be determined that the percent VHAP content can be reasonably expected never to exceed 10 percent by weight. For purposes of determining the percent VHAP content of the process fluid that is contained in or contacts equipment, procedures that conform to the methods described in ASTM Method D-2267 (incorporated by the reference as specified in § 61.18) shall be used.

(2)(i) An owner or operator may use engineering judgment rather than the procedures in paragraph (d)(1) of this section to demonstrate that the percent VHAP content does not exceed 10 percent by weight, provided that the engineering judgment demonstrates that the VHAP content clearly does not exceed 10 percent by weight. When an owner or operator and the Administrator do not agree on whether a piece of equipment is not in VHAP service, however, the procedures in paragraph (d)(1) of this section shall be used to resolve the disagreement.

(ii) If an owner or operator determines that a piece of equipment is in VHAP service, the determination can be revised only after following the procedures in paragraph (d)(1) of this section.

(3) Samples used in determining the percent VHAP content shall be representative of the process fluid that is contained in or contacts the equipment or the gas being combusted in the flare.

(e)(1) Method 22 of appendix A of 40 CFR part 60 shall be used to determine compliance of flares with the visible emission provisions of this subpart.

(2) The presence of a flare pilot flame shall be monitored using a thermocouple or any other equivalent device to detect the presence of a flame.

(3) The net heating value of the gas being combusted in a flare shall be calculated using the following equation:

$$H_T = K\left(\sum_{i=1}^{n} C_i H_i\right)$$

Where:

H_T = Net heating value of the sample, MJ/scm (BTU/scf); where the net enthalpy per mole of offgas is based on combustion at 25 °C and 760 mm Hg (77 °F and 14.7 psi), but the standard temperature for determining the volume corresponding to one mole is 20 °C (68 °F).

K = conversion constant, 1.740×10^{7} (g-mole) (MJ)/(ppm-scm-kcal) (metric units); or 4.674×10^{8} ((g-mole) (Btu)/(ppm-scf-kcal)) (English units)

Ci = Concentration of sample component “i” in ppm, as measured by Method 18 of appendix A to 40 CFR part 60 and ASTM D2504-67, 77, or 88 (Reapproved 1993) (incorporated by reference as specified in § 61.18).

H_i = net heat of combustion of sample component “i” at 25 °C and 760 mm Hg (77 °F and 14.7 psi), kcal/g-mole. The heats of combustion may be determined using ASTM D2382-76 or 88 or D4809-95 (incorporated by reference as specified in § 61.18) if published values are not available or cannot be calculated.

(4) The actual exit velocity of a flare shall be determined by dividing the volumetric flowrate (in units of standard temperature and pressure), as determined by Method 2, 2A, 2C, or 2D, as appropriate, by the unobstructed (free) cross section area of the flare tip.

(5) The maximum permitted velocity, V_{max} , for air-assisted flares shall be determined by the following equation:

$$V_{max} = K_1 + K_2 H_T$$

Where:

V_{max} = Maximum permitted velocity, m/sec (ft/sec).

H_T = Net heating value of the gas being combusted, as determined in paragraph (e)(3) of this section, MJ/scm (Btu/scf).

K_1 = 8.706 m/sec (metric units)

= 28.56 ft/sec (English units)

K_2 = 0.7084 m^4 /(MJ-sec) (metric units)

= 0.087 ft^4 /(Btu-sec) (English units)

[49 FR 23513, June 6, 1984, as amended at 49 FR 38946, Oct. 2, 1984; 49 FR 43647, Oct. 31, 1984; 53 FR 36972, Sept. 23, 1988; 54 FR 38077, Sept. 14, 1989; 65 FR 62158, Oct. 17, 2000]

§ 61.246 Recordkeeping requirements.

(a)(1) Each owner or operator subject to the provisions of this subpart shall comply with the recordkeeping requirements of this section.

(2) An owner or operator of more than one process unit subject to the provisions of this subpart may comply with the recordkeeping requirements for these process units in one recordkeeping system if the system identifies each record by each process unit.

(b) When each leak is detected as specified in §§ 61.242-2, 61.242-3, 61.242-7, 61.242-8, and 61.135, the following requirements apply:

(1) A weatherproof and readily visible identification, marked with the equipment identification number, shall be attached to the leaking equipment.

(2) The identification on a valve may be removed after it has been monitored for 2 successive months as specified in § 61.242-7(c) and no leak has been detected during those 2 months.

(3) The identification on equipment, except on a valve, may be removed after it has been repaired.

(c) When each leak is detected as specified in §§ 61.242-2, 61.242-3. 61.242-7, 61.242-8, and 61.135, the following information shall be recorded in a log and shall be kept for 2 years in a readily accessible location:

(1) The instrument and operator identification numbers and the equipment identification number.

(2) The date the leak was detected and the dates of each attempt to repair the leak.

(3) Repair methods applied in each attempt to repair the leak.

(4) “Above 10,000” if the maximum instrument reading measured by the methods specified in § 61.245(a) after each repair attempt is equal to or greater than 10,000 ppm.

(5) “Repair delayed” and the reason for the delay if a leak is not repaired within 15 calendar days after discovery of the leak.

(6) The signature of the owner or operator (or designate) whose decision it was that repair could not be effected without a process shutdown.

(7) The expected date of successful repair of the leak if a leak is not repaired within 15 calendar days.

(8) Dates of process unit shutdowns that occur while the equipment is unrepaired.

(9) The date of successful repair of the leak.

(d) The following information pertaining to the design requirements for closed-vent systems and control devices described in § 61.242-11 shall be recorded and kept in a readily accessible location:

(1) Detailed schematics, design specifications, and piping and instrumentation diagrams.

(2) The dates and descriptions of any changes in the design specifications.

(3) A description of the parameter or parameters monitored, as required in § 61.242-11(e), to ensure that control devices are operated and maintained in conformance with their design and an explanation of why that parameter (or parameters) was selected for the monitoring.

(4) Periods when the closed-vent systems and control devices required in §§ 61.242-2, 61.242-3, 61.242-4, 61.242-5 and 61.242-9 are not operated as designed, including periods when a flare pilot light does not have a flame.

(5) Dates of startups and shutdowns of the closed-vent systems and control devices required in §§ 61.242-2, 61.242-3, 61.242-4, 61.242-5 and 61.242-9.

(e) The following information pertaining to all equipment to which a standard applies shall be recorded in a log that is kept in a readily accessible location:

(1) A list of identification numbers for equipment (except welded fittings) subject to the requirements of this subpart.

(2)(i) A list of identification numbers for equipment that the owner or operator elects to designate for no detectable emissions as indicated by an instrument reading of less than 500 ppm above background.

(ii) The designation of this equipment for no detectable emissions shall be signed by the owner or operator.

(3) A list of equipment identification numbers for pressure relief devices required to comply with § 61.242-4(a).

(4)(i) The dates of each compliance test required in §§ 61.242-2(e), 61.242-3(i), 61.242-4, 61.242-7(f), and 61.135(g).

(ii) The background level measured during each compliance test.

(iii) The maximum instrument reading measured at the equipment during each compliance test.

(5) A list of identification numbers for equipment in vacuum service.

(f) The following information pertaining to all valves subject to the requirements of § 61.242-7(g) and (h) and to all pumps subject to the requirements of § 61.242-2(g) shall be recorded in a log that is kept in a readily accessible location:

(1) A list of identification numbers for valves and pumps that are designated as unsafe to monitor, an explanation for each valve or pump stating why the valve or pump is unsafe to monitor, and the plan for monitoring each valve or pump.

(2) A list of identification numbers for valves that are designated as difficult to monitor, an explanation for each valve stating why the valve is difficult to monitor, and the planned schedule for monitoring each valve.

(g) The following information shall be recorded for valves complying with § 61.243-2:

(1) A schedule of monitoring.

(2) The percent of valves found leaking during each monitoring period.

(h) The following information shall be recorded in a log that is kept in a readily accessible location:

(1) Design criterion required in §§ 61.242-2(d)(5), 61.242-3(e)(2), and 61.135(e)(4) and an explanation of the design criterion; and

(2) Any changes to this criterion and the reasons for the changes.

(i) The following information shall be recorded in a log that is kept in a readily accessible location for use in determining exemptions as provided in the applicability section of this subpart and other specific subparts:

(1) An analysis demonstrating the design capacity of the process unit, and

(2) An analysis demonstrating that equipment is not in VHAP service.

(j) Information and data used to demonstrate that a piece of equipment is not in VHAP service shall be recorded in a log that is kept in a readily accessible location.

[49 FR 23513, June 6, 1984, as amended at 49 FR 38946, Oct. 2, 1984; 54 FR 38077, Sept. 14, 1989; 65 FR 78283, Dec. 14, 2000]

§ 61.247 Reporting requirements.

(a)(1) An owner or operator of any piece of equipment to which this subpart applies shall submit a statement in writing notifying the Administrator that the requirements of §§ 61.242, 61.245, 61.246, and 61.247 are being implemented.

(2) In the case of an existing source or a new source which has an initial startup date preceding the effective date, the statement is to be submitted within 90 days of the effective date, unless a waiver of compliance is granted under § 61.11, along with the information required under § 61.10. If a waiver of compliance is granted, the statement is to be submitted on a date scheduled by the Administrator.

(3) In the case of new sources which did not have an initial startup date preceding December 14, 2000, the statement required under paragraph (a)(1) of this section shall be submitted with the application for approval of construction, as described in § 61.07.

(4) For owners and operators complying with 40 CFR part 65, subpart C or F, the statement required under paragraph (a)(1) of this section shall notify the Administrator that the requirements of 40 CFR part 65, subpart C or F, are being implemented.

(5) The statement is to contain the following information for each source:

(i) Equipment identification number and process unit identification.

(ii) Type of equipment (for example, a pump or pipeline valve).

(iii) Percent by weight VHAP in the fluid at the equipment.

(iv) Process fluid state at the equipment (gas/vapor or liquid).

(v) Method of compliance with the standard (for example, “monthly leak detection and repair” or “equipped with dual mechanical seals”).

(b) A report shall be submitted to the Administrator semiannually starting 6 months after the initial report required in paragraph (a) of this section, that includes the following information:

(1) Process unit identification.

(2) For each month during the semiannual reporting period,

(i) Number of valves for which leaks were detected as described in § 61.242-7(b) of § 61.243-2.

(ii) Number of valves for which leaks were not repaired as required in § 61.242-7(d).

(iii) Number of pumps for which leaks were detected as described in § 61.242-2 (b) and (d)(6).

(iv) Number of pumps for which leaks were not repaired as required in § 61.242-2 (c) and (d)(6).

(v) Number of compressors for which leaks were detected as described in § 61.242-3(f).

(vi) Number of compressors for which leaks were not repaired as required in § 61.242-3(g).

(vii) The facts that explain any delay of repairs and, where appropriate, why a process unit shutdown was technically infeasible.

(3) Dates of process unit shutdowns which occurred within the semiannual reporting period.

(4) Revisions to items reported according to paragraph (a) if changes have occurred since the initial report or subsequent revisions to the initial report.

NOTE: Compliance with the requirements of § 61.10(c) is not required for revisions documented under this paragraph.

(5) The results of all performance tests and monitoring to determine compliance with no detectable emissions and with §§ 61.243-1 and 61.243-2 conducted within the semiannual reporting period.

(c) In the first report submitted as required in paragraph (a) of this section, the report shall include a reporting schedule stating the months that semiannual reports shall be submitted. Subsequent reports shall be submitted according to that schedule, unless a revised schedule has been submitted in a previous semiannual report.

(d) An owner or operator electing to comply with the provisions of §§ 61.243-1 and 61.243-2 shall notify the Administrator of the alternative standard selected 90 days before implementing either of the provisions.

(e) An application for approval of construction or modification, §§ 61.05(a) and 61.07, will not be required if—

(1) The new source complies with the standard, § 61.242;

(2) The new source is not part of the construction of a process unit; and

(3) In the next semiannual report required by paragraph (b) of this section, the information in paragraph (a)(5) of this section is reported.

(f) For owners or operators choosing to comply with 40 CFR part 65, subpart C or F, an application for approval of construction or modification, as required under §§ 61.05 and 61.07 will not be required if:

(1) The new source complies with 40 CFR 65.106 through 65.115 and with 40 CFR part 65, subpart C, for surge control vessels and bottoms receivers;

(2) The new source is not part of the construction of a process unit; and

(3) In the next semiannual report required by 40 CFR 65.120(b) and 65.48(b), the information in paragraph (a)(5) of this section is reported.

[49 FR 23513, June 6, 1984, as amended at 49 FR 38947, Oct. 2, 1984; 54 FR 38077, Sept. 14, 1989; 65 FR 78283, Dec. 14, 2000]

Table 1 to Subpart V of Part 61—Surge Control Vessels and Bottoms Receivers at Existing Sources

Vessel capacity (cubic meters)	Vapor pressure [1] (kilopascals)
75 ≤ capacity < 151	≥ 13.1
151 ≤ capacity	≥ 5.2

[1] Maximum true vapor pressure as defined in § 61.241.

[65 FR 78283, Dec. 14, 2000]

Table 2 to Subpart V of Part 61—Surge Control Vessels and Bottoms Receivers at New Sources

Vessel capacity (cubic meters)	Vapor pressure [1] (kilopascals)
38 ≤ capacity < 151	≥ 13.1
151 ≤ capacity	≥ 0.7

[1] Maximum true vapor pressure as defined in § 61.241.

[65 FR 78283, Dec. 14, 2000]

Attachment N
To Part 70 Operating Permit Renewal No. T089-29907-00121

[Downloaded from the eCFR on May 21, 2013]

Electronic Code of Federal Regulations

Title 40: Protection of Environment

40 CFR 61, Subpart FF—National Emission Standard for Benzene Waste Operations

Source: 55 FR 8346, Mar. 7, 1990, unless otherwise noted.

§ 61.340 Applicability.

(a) The provisions of this subpart apply to owners and operators of chemical manufacturing plants, coke by-product recovery plants, and petroleum refineries.

(b) The provisions of this subpart apply to owners and operators of hazardous waste treatment, storage, and disposal facilities that treat, store, or dispose of hazardous waste generated by any facility listed in paragraph (a) of this section. The waste streams at hazardous waste treatment, storage, and disposal facilities subject to the provisions of this subpart are the benzene-containing hazardous waste from any facility listed in paragraph (a) of this section. A hazardous waste treatment, storage, and disposal facility is a facility that must obtain a hazardous waste management permit under subtitle C of the Solid Waste Disposal Act.

(c) At each facility identified in paragraph (a) or (b) of this section, the following waste is exempt from the requirements of this subpart:

(1) Waste in the form of gases or vapors that is emitted from process fluids:

(2) Waste that is contained in a segregated stormwater sewer system.

(d) At each facility identified in paragraph (a) or (b) of this section, any gaseous stream from a waste management unit, treatment process, or wastewater treatment system routed to a fuel gas system, as defined in § 61.341, is exempt from this subpart. No testing, monitoring, recordkeeping, or reporting is required under this subpart for any gaseous stream from a waste management unit, treatment process, or wastewater treatment unit routed to a fuel gas system.

[55 FR 8346, Mar. 7, 1990, as amended at 55 FR 37231, Sept. 10, 1990; 58 FR 3095, Jan. 7, 1993; 67 FR 68531, Nov. 12, 2002]

§ 61.341 Definitions.

Benzene concentration means the fraction by weight of benzene in a waste as determined in accordance with the procedures specified in § 61.355 of this subpart.

Car-seal means a seal that is placed on a device that is used to change the position of a valve (e.g., from opened to closed) in such a way that the position of the valve cannot be changed without breaking the seal.

Chemical manufacturing plant means any facility engaged in the production of chemicals by chemical, thermal, physical, or biological processes for use as a product, co-product, by-product, or intermediate including but not limited to industrial organic chemicals, organic pesticide products, pharmaceutical preparations, paint and allied products, fertilizers, and agricultural chemicals. Examples of chemical manufacturing plants include facilities at which process units are operated to produce one or more of the following chemicals: benzenesulfonic acid, benzene, chlorobenzene, cumene, cyclohexane, ethylene, ethylbenzene, hydroquinone, linear alklylbenzene, nitrobenzene, resorcinol, sulfolane, or styrene.

Closed-vent system means a system that is not open to the atmosphere and is composed of piping, ductwork, connections, and, if necessary, flow inducing devices that transport gas or vapor from an emission source to a control device.

Coke by-product recovery plant means any facility designed and operated for the separation and recovery of coal tar derivatives (by-products) evolved from coal during the coking process of a coke oven battery.

Container means any portable waste management unit in which a material is stored, transported, treated, or otherwise handled. Examples of containers are drums, barrels, tank trucks, barges, dumpsters, tank cars, dump trucks, and ships.

Control device means an enclosed combustion device, vapor recovery system, or flare.

Cover means a device or system which is placed on or over a waste placed in a waste management unit so that the entire waste surface area is enclosed and sealed to minimize air emissions. A cover may have openings necessary for operation, inspection, and maintenance of the waste management unit such as access hatches, sampling ports, and gauge wells provided that each opening is closed and sealed when not in use. Example of covers include a fixed roof installed on a tank, a lid installed on a container, and an air-supported enclosure installed over a waste management unit.

External floating roof means a pontoon-type or double-deck type cover with certain rim sealing mechanisms that rests on the liquid surface in a waste management unit with no fixed roof.

Facility means all process units and product tanks that generate waste within a stationary source, and all waste management units that are used for waste treatment, storage, or disposal within a stationary source.

Fixed roof means a cover that is mounted on a waste management unit in a stationary manner and that does not move with fluctuations in liquid level.

Floating roof means a cover with certain rim sealing mechanisms consisting of a double deck, pontoon single deck, internal floating cover or covered floating roof, which rests upon and is supported by the liquid being contained, and is equipped with a closure seal or seals to close the space between the roof edge and unit wall.

Flow indicator means a device which indicates whether gas flow is present in a line or vent system.

Fuel gas system means the offsite and onsite piping and control system that gathers gaseous streams generated by facility operations, may blend them with sources of gas, if available, and transports the blended gaseous fuel at suitable pressures for use as fuel in heaters, furnaces, boilers, incinerators, gas turbines, and other combustion devices located within or outside the facility. The fuel is piped directly to each individual combustion device, and the system typically operates at pressures over atmospheric.

Individual drain system means the system used to convey waste from a process unit, product storage tank, or waste management unit to a waste management unit. The term includes all process drains and common junction boxes, together with their associated sewer lines and other junction boxes, down to the receiving waste management unit.

Internal floating roof means a cover that rests or floats on the liquid surface inside a waste management unit that has a fixed roof.

Liquid-mounted seal means a foam or liquid-filled primary seal mounted in contact with the liquid between the waste management unit wall and the floating roof continuously around the circumference.

Loading means the introduction of waste into a waste management unit but not necessarily to complete capacity (also referred to as filling).

Maximum organic vapor pressure means the equilibrium partial pressure exerted by the waste at the temperature equal to the highest calendar-month average of the waste storage temperature for waste stored above or below the

ambient temperature or at the local maximum monthly average temperature as reported by the National Weather Service for waste stored at the ambient temperature, as determined:

(1) In accordance with § 60.17(c); or

(2) As obtained from standard reference texts; or

(3) In accordance with § 60.17(a)(37); or

(4) Any other method approved by the Administrator.

No detectable emissions means less than 500 parts per million by volume (ppmv) above background levels, as measured by a detection instrument reading in accordance with the procedures specified in § 61.355(h) of this subpart.

Oil-water separator means a waste management unit, generally a tank or surface impoundment, used to separate oil from water. An oil-water separator consists of not only the separation unit but also the forebay and other separator basins, skimmers, weirs, grit chambers, sludge hoppers, and bar screens that are located directly after the individual drain system and prior to additional treatment units such as an air flotation unit, clarifier, or biological treatment unit. Examples of an oil-water separator incude an API separator, parallel-plate interceptor, and corrugated-plate interceptor with the associated ancillary equipment.

Petroleum refinery means any facility engaged in producing gasoline, kerosene, distillate fuel oils, residual fuel oils, lubricants, or other products through the distillation of petroleum, or through the redistillation, cracking, or reforming of unfinished petroleum derivatives.

Petroleum means the crude oil removed from the earth and the oils derived from tar sands, shale, and coal.

Point of waste generation means the location where the waste stream exits the process unit component or storage tank prior to handling or treatment in an operation that is not an integral part of the production process, or in the case of waste management units that generate new wastes after treatment, the location where the waste stream exits the waste management unit component.

Process unit means equipment assembled and connected by pipes or ducts to produce intermediate or final products. A process unit can be operated independently if supplied with sufficient fuel or raw materials and sufficient product storage facilities.

Process unit turnaround means the shutting down of the operations of a process unit, the purging of the contents of the process unit, the maintenance or repair work, followed by restarting of the process.

Process unit turnaround waste means a waste that is generated as a result of a process unit turnaround.

Process wastewater means water which comes in contact with benzene during manufacturing or processing operations conducted within a process unit. Process wastewater is not organic wastes, process fluids, product tank drawdown, cooling tower blowdown, steam trap condensate, or landfill leachate.

Process wastewater stream means a waste stream that contains only process wastewater.

Product tank means a stationary unit that is designed to contain an accumulation of materials that are fed to or produced by a process unit, and is constructed primarily of non-earthen materials (e.g., wood, concrete, steel, plastic) which provide structural support.

Product tank drawdown means any material or mixture of materials discharged from a product tank for the purpose of removing water or other contaminants from the product tank.

Safety device means a closure device such as a pressure relief valve, frangible disc, fusible plug, or any other type of device which functions exclusively to prevent physical damage or permanent deformation to a unit or its air emission control equipment by venting gases or vapors directly to the atmosphere during unsafe conditions resulting from an unplanned, accidental, or emergency event. For the purpose of this subpart, a safety device is not used for routine venting of gases or vapors from the vapor headspace underneath a cover such as during filling of the unit or to adjust the pressure in this vapor headspace in response to normal daily diurnal ambient temperature fluctuations. A safety device is designed to remain in a closed position during normal operations and open only when the internal pressure, or another relevant parameter, exceeds the device threshold setting applicable to the air emission control equipment as determined by the owner or operator based on manufacturer recommendations, applicable regulations, fire protection and prevention codes, standard engineering codes and practices, or other requirements for the safe handling of flammable, ignitable, explosive, reactive, or hazardous materials.

Segregated stormwater sewer system means a drain and collection system designed and operated for the sole purpose of collecting rainfall runoff at a facility, and which is segregated from all other individual drain systems.

Sewer line means a lateral, trunk line, branch line, or other enclosed conduit used to convey waste to a downstream waste management unit.

Slop oil means the floating oil and solids that accumulate on the surface of an oil-water separator.

Sour water stream means a stream that:

(1) Contains ammonia or sulfur compounds (usually hydrogen sulfide) at concentrations of 10 ppm by weight or more;

(2) Is generated from separation of water from a feed stock, intermediate, or product that contained ammonia or sulfur compounds; and

(3) Requires treatment to remove the ammonia or sulfur compounds.

Sour water stripper means a unit that:

(1) Is designed and operated to remove ammonia or sulfur compounds (usually hydrogen sulfide) from sour water streams;

(2) Has the sour water streams transferred to the stripper through hard piping or other enclosed system; and

(3) Is operated in such a manner that the offgases are sent to a sulfur recovery unit, processing unit, incinerator, flare, or other combustion device.

Surface impoundment means a waste management unit which is a natural topographic depression, man-made excavation, or diked area formed primarily of earthen materials (although it may be lined with man-made materials), which is designed to hold an accumulation of liquid wastes or waste containing free liquids, and which is not an injection well. Examples of surface impoundments are holding, storage, settling, and aeration pits, ponds, and lagoons.

Tank means a stationary waste management unit that is designed to contain an accumulation of waste and is constructed primarily of nonearthen materials (e.g., wood, concrete, steel, plastic) which provide structural support.

Treatment process means a stream stripping unit, thin-film evaporation unit, waste incinerator, or any other process used to comply with § 61.348 of this subpart.

Vapor-mounted seal means a foam-filled primary seal mounted continuously around the perimeter of a waste management unit so there is an annular vapor space underneath the seal. The annular vapor space is bounded by the bottom of the primary seal, the unit wall, the liquid surface, and the floating roof.

Waste means any material resulting from industrial, commercial, mining or agricultural operations, or from community activities that is discarded or is being accumulated, stored, or physically, chemically, thermally, or biologically treated prior to being discarded, recycled, or discharged.

Waste management unit means a piece of equipment, structure, or transport mechanism used in handling, storage, treatment, or disposal of waste. Examples of a waste management unit include a tank, surface impoundment, container, oil-water separator, individual drain system, steam stripping unit, thin-film evaporation unit, waste incinerator, and landfill.

Waste stream means the waste generated by a particular process unit, product tank, or waste management unit. The characteristics of the waste stream (e.g., flow rate, benzene concentration, water content) are determined at the point of waste generation. Examples of a waste stream include process wastewater, product tank drawdown, sludge and slop oil removed from waste management units, and landfill leachate.

Wastewater treatment system means any component, piece of equipment, or installation that receives, manages, or treats process wastewater, product tank drawdown, or landfill leachate prior to direct or indirect discharge in accordance with the National Pollutant Discharge Elimination System permit regulations under 40 CFR part 122. These systems typically include individual drain systems, oil-water separators, air flotation units, equalization tanks, and biological treatment units.

Water seal controls means a seal pot, p-leg trap, or other type of trap filled with water (e.g., flooded sewers that maintain water levels adequate to prevent air flow through the system) that creates a water barrier between the sewer line and the atmosphere. The water level of the seal must be maintained in the vertical leg of a drain in order to be considered a water seal.

[55 FR 8346, Mar. 7, 1990; 55 FR 12444, Apr. 3, 1990, as amended at 58 FR 3095, Jan. 7, 1993; 67 FR 68531, Nov. 12, 2002]

§ 61.342 Standards: General.

(a) An owner or operator of a facility at which the total annual benzene quantity from facility waste is less than 10 megagrams per year (Mg/yr) (11 ton/yr) shall be exempt from the requirements of paragraphs (b) and (c) of this section. The total annual benzene quantity from facility waste is the sum of the annual benzene quantity for each waste stream at the facility that has a flow-weighted annual average water content greater than 10 percent or that is mixed with water, or other wastes, at any time and the mixture has an annual average water content greater than 10 percent. The benzene quantity in a waste stream is to be counted only once without multiple counting if other waste streams are mixed with or generated from the original waste stream. Other specific requirements for calculating the total annual benzene waste quantity are as follows:

(1) Wastes that are exempted from control under §§ 61.342(c)(2) and 61.342(c)(3) are included in the calculation of the total annual benzene quantity if they have an annual average water content greater than 10 percent, or if they are mixed with water or other wastes at any time and the mixture has an annual average water content greater than 10 percent.

(2) The benzene in a material subject to this subpart that is sold is included in the calculation of the total annual benzene quantity if the material has an annual average water content greater than 10 percent.

(3) Benzene in wastes generated by remediation activities conducted at the facility, such as the excavation of contaminated soil, pumping and treatment of groundwater, and the recovery of product from soil or groundwater, are not included in the calculation of total annual benzene quantity for that facility. If the facility's total annual benzene quantity is 10 Mg/yr (11 ton/yr) or more, wastes generated by remediation activities are subject to the requirements of paragraphs (c) through (h) of this section. If the facility is managing remediation waste generated offsite, the benzene in this waste shall be included in the calculation of total annual benzene quantity in facility waste, if the waste streams have an annual average water content greater than 10 percent, or if they are mixed with water or other wastes at any time and the mixture has an annual average water content greater than 10 percent.

(4) The total annual benzene quantity is determined based upon the quantity of benzene in the waste before any waste treatment occurs to remove the benzene except as specified in § 61.355(c)(1)(i) (A) through (C).

(b) Each owner or operator of a facility at which the total annual benzene quantity from facility waste is equal to or greater than 10 Mg/yr (11 ton/yr) as determined in paragraph (a) of this section shall be in compliance with the requirements of paragraphs (c) through (h) of this section no later than 90 days following the effective date, unless a waiver of compliance has been obtained under § 61.11, or by the initial startup for a new source with an initial startup after the effective date.

(1) The owner or operator of an existing source unable to comply with the rule within the required time may request a waiver of compliance under § 61.10.

(2) As part of the waiver application, the owner or operator shall submit to the Administrator a plan under § 61.10(b)(3) that is an enforceable commitment to obtain environmental benefits to mitigate the benzene emissions that result from extending the compliance date. The plan shall include the following information:

(i) A description of the method of compliance, including the control approach, schedule for installing controls, and quantity of the benzene emissions that result from extending the compliance date;

(ii) If the control approach involves a compliance strategy designed to obtain integrated compliance with multiple regulatory requirements, a description of the other regulations involved and their effective dates; and

(iii) A description of the actions to be taken at the facility to obtain mitigating environmental benefits, including how the benefits will be obtained, the schedule for these actions, and an estimate of the quantifiable benefits that directly result from these actions.

(c) Each owner or operator of a facility at which the total annual benzene quantity from facility waste is equal to or greater than 10 Mg/yr (11 ton/yr) as determined in paragraph (a) of this section shall manage and treat the facility waste as follows:

(1) For each waste stream that contains benzene, including (but not limited to) organic waste streams that contain less than 10 percent water and aqueous waste streams, even if the wastes are not discharged to an individual drain system, the owner or operator shall:

(i) Remove or destroy the benzene contained in the waste using a treatment process or wastewater treatment system that complies with the standards specified in § 61.348 of this subpart.

(ii) Comply with the standards specified in §§ 61.343 through 61.347 of this subpart for each waste management unit that receives or manages the waste stream prior to and during treatment of the waste stream in accordance with paragraph (c)(1)(i) of this section.

(iii) Each waste management unit used to manage or treat waste streams that will be recycled to a process shall comply with the standards specified in §§ 61.343 through 61.347. Once the waste stream is recycled to a process, including to a tank used for the storage of production process feed, product, or product intermediates, unless this tank is used primarily for the storage of wastes, the material is no longer subject to paragraph (c) of this section.

(2) A waste stream is exempt from paragraph (c)(1) of this section provided that the owner or operator demonstrates initially and, thereafter, at least once per year that the flow-weighted annual average benzene concentration for the waste stream is less than 10 ppmw as determined by the procedures specified in § 61.355(c)(2) or § 61.355(c)(3).

(3) A waste stream is exempt from paragraph (c)(1) of this section provided that the owner or operator demonstrates initially and, thereafter, at least once per year that the conditions specified in either paragraph (c)(3)(i) or (c)(3)(ii) of this section are met.

(i) The waste stream is process wastewater that has a flow rate less than 0.02 liters per minute (0.005 gallons per minute) or an annual wastewater quantity of less than 10 Mg/yr (11 ton/yr); or

(ii) All of the following conditions are met:

(A) The owner or operator does not choose to exempt process wastewater under paragraph (c)(3)(i) of this section,

(B) The total annual benzene quantity in all waste streams chosen for exemption in paragraph (c)(3)(ii) of this section does not exceed 2.0 Mg/yr (2.2 ton/yr) as determined in the procedures in § 61.355(j), and

(C) The total annual benzene quantity in a waste stream chosen for exemption, including process unit turnaround waste, is determined for the year in which the waste is generated.

(d) As an alternative to the requirements specified in paragraphs (c) and (e) of this section, an owner or operator of a facility at which the total annual benzene quantity from facility waste is equal to or greater than 10 Mg/yr (11 ton/yr) as determined in paragraph (a) of this section may elect to manage and treat the facility waste as follows:

(1) The owner or operator shall manage and treat facility waste other than process wastewater in accordance with the requirements of paragraph (c)(1) of this section.

(2) The owner or operator shall manage and treat process wastewater in accordance with the following requirements:

(i) Process wastewater shall be treated to achieve a total annual benzene quantity from facility process wastewater less than 1 Mg/yr (1.1 ton/yr). Total annual benzene from facility process wastewater shall be determined by adding together the annual benzene quantity at the point of waste generation for each untreated process wastewater stream plus the annual benzene quantity exiting the treatment process for each process wastewater stream treated in accordance with the requirements of paragraph (c)(1)(i) of this section.

(ii) Each treated process wastewater stream identified in paragraph (d)(2)(i) of this section shall be managed and treated in accordance with paragraph (c)(1) of this section.

(iii) Each untreated process wastewater stream identified in paragraph (d)(2)(i) of this section is exempt from the requirements of paragraph (c)(1) of this section.

(e) As an alternative to the requirements specified in paragraphs (c) and (d) of this section, an owner or operator of a facility at which the total annual benzene quantity from facility waste is equal to or greater than 10 Mg/yr (11 ton/yr) as determined in paragraph (a) of this section may elect to manage and treat the facility waste as follows:

(1) The owner or operator shall manage and treat facility waste with a flow-weighted annual average water content of less than 10 percent in accordance with the requirements of paragraph (c)(1) of this section; and

(2) The owner or operator shall manage and treat facility waste (including remediation and process unit turnaround waste) with a flow-weighted annual average water content of 10 percent or greater, on a volume basis as total water, and each waste stream that is mixed with water or wastes at any time such that the resulting mixture has an annual water content greater than 10 percent, in accordance with the following:

(i) The benzene quantity for the wastes described in paragraph (e)(2) of this section must be equal to or less than 6.0 Mg/yr (6.6 ton/yr), as determined in § 61.355(k). Wastes as described in paragraph (e)(2) of this section that are transferred offsite shall be included in the determination of benzene quantity as provided in § 61.355(k). The provisions of paragraph (f) of this section shall not apply to any owner or operator who elects to comply with the provisions of paragraph (e) of this section.

(ii) The determination of benzene quantity for each waste stream defined in paragraph (e)(2) of this section shall be made in accordance with § 61.355(k).

(f) Rather than treating the waste onsite, an owner or operator may elect to comply with paragraph (c)(1)(i) of this section by transferring the waste offsite to another facility where the waste is treated in accordance with the requirements of paragraph (c)(1)(i) of this section. The owner or operator transferring the waste shall:

(1) Comply with the standards specified in §§ 61.343 through 61.347 of this subpart for each waste management unit that receives or manages the waste prior to shipment of the waste offsite.

(2) Include with each offsite waste shipment a notice stating that the waste contains benzene which is required to be managed and treated in accordance with the provisions of this subpart.

(g) Compliance with this subpart will be determined by review of facility records and results from tests and inspections using methods and procedures specified in § 61.355 of this subpart.

(h) Permission to use an alternative means of compliance to meet the requirements of §§ 61.342 through 61.352 of this subpart may be granted by the Administrator as provided in § 61.353 of this subpart.

[55 FR 8346, Mar. 7, 1990, as amended at 58 FR 3095, Jan. 7, 1993; 65 FR 62159, 62160, Oct. 17, 2000]

§ 61.343 Standards: Tanks.

(a) Except as provided in paragraph (b) of this section and in § 61.351, the owner or operator must meet the standards in paragraph (a)(1) or (2) of this section for each tank in which the waste stream is placed in accordance with § 61.342 (c)(1)(ii). The standards in this section apply to the treatment and storage of the waste stream in a tank, including dewatering.

(1) The owner or operator shall install, operate, and maintain a fixed-roof and closed-vent system that routes all organic vapors vented from the tank to a control device.

(i) The fixed-roof shall meet the following requirements:

(A) The cover and all openings (e.g., access hatches, sampling ports, and gauge wells) shall be designed to operate with no detectable emissions as indicated by an instrument reading of less than 500 ppmv above background, as determined initially and thereafter at least once per year by the methods specified in § 61.355(h) of this subpart.

(B) Each opening shall be maintained in a closed, sealed position (e.g., covered by a lid that is gasketed and latched) at all times that waste is in the tank except when it is necessary to use the opening for waste sampling or removal, or for equipment inspection, maintenance, or repair.

(C) If the cover and closed-vent system operate such that the tank is maintained at a pressure less than atmospheric pressure, then paragraph (a)(1)(i)(B) of this section does not apply to any opening that meets all of thefollowing conditions:

(*1*) The purpose of the opening is to provide dilution air to reduce the explosion hazard;

(*2*) The opening is designed to operate with no detectable emissions as indicated by an instrument reading of less than 500 ppmv above background, as determined initially and thereafter at least once per year by the methods specified in § 61.355(h); and

(*3*) The pressure is monitored continuously to ensure that the pressure in the tank remains below atmospheric pressure.

(ii) The closed-vent system and control device shall be designed and operated in accordance with the requirements of § 61.349 of this subpart.

(2) The owner or operator must install, operate, and maintain an enclosure and closed-vent system that routes all organic vapors vented from the tank, located inside the enclosure, to a control device in accordance with the requirements specified in paragraph (e) of this section.

(b) For a tank that meets all the conditions specified in paragraph (b)(1) of this section, the owner or operator may elect to comply with paragraph (b)(2) of this section as an alternative to the requirements specified in paragraph (a)(1) of this section.

(1) The waste managed in the tank complying with paragraph (b)(2) of this section shall meet all of the following conditions:

(i) Each waste stream managed in the tank must have a flow-weighted annual average water content less than or equal to 10 percent water, on a volume basis as total water.

(ii) The waste managed in the tank either:

(A) Has a maximum organic vapor pressure less than 5.2 kilopascals (kPa) (0.75 pounds per square inch (psi));

(B) Has a maximum organic vapor pressure less than 27.6 kPa (4.0 psi) and is managed in a tank having design capacity less than 151 m^3 (40,000 gal); or

(C) Has a maximum organic vapor pressure less than 76.6 kPa (11.1 psi) and is managed in a tank having a design capacity less than 75 m^3 (20,000 gal).

(2) The owner or operator shall install, operate, and maintain a fixed roof as specified in paragraph (a)(1)(i).

(3) For each tank complying with paragraph (b) of this section, one or more devices which vent directly to the atmosphere may be used on the tank provided each device remains in a closed, sealed position during normal operations except when the device needs to open to prevent physical damage or permanent deformation of the tank or cover resulting from filling or emptying the tank, diurnal temperature changes, atmospheric pressure changes or malfunction of the unit in accordance with good engineering and safety practices for handling flammable, explosive, or other hazardous materials.

(c) Each fixed-roof, seal, access door, and all other openings shall be checked by visual inspection initially and quarterly thereafter to ensure that no cracks or gaps occur and that access doors and other openings are closed and gasketed properly.

(d) Except as provided in § 61.350 of this subpart, when a broken seal or gasket or other problem is identified, or when detectable emissions are measured, first efforts at repair shall be made as soon as practicable, but not later than 45 calendar days after identification.

(e) Each owner or operator who controls air pollutant emissions by using an enclosure vented through a closed-vent system to a control device must meet the requirements specified in paragraphs (e)(1) through (4) of this section.

(1) The tank must be located inside a total enclosure. The enclosure must be designed and operated in accordance with the criteria for a permanent total enclosure as specified in “Procedure T—Criteria for and Verification of a Permanent or Temporary Total Enclosure” in 40 CFR 52.741, appendix B. The enclosure may have permanent or temporary openings to allow worker access; passage of material into or out of the enclosure by conveyor, vehicles, or other mechanical means; entry of permanent mechanical or electrical equipment; or direct airflow into the enclosure. The owner or operator must perform the verification procedure for the enclosure as specified in section 5.0 of Procedure T initially when the enclosure is first installed and, thereafter, annually. A facility that has conducted an initial compliance demonstration and that performs annual compliance demonstrations in accordance with the requirements for Tank Level 2 control requirements 40 CFR 264.1084(i) or 40 CFR 265(i) is not required to make repeat demonstrations of initial and continuous compliance for the purposes of this subpart.

(2) The enclosure must be vented through a closed-vent system to a control device that is designed and operated in accordance with the standards for control devices specified in § 61.349.

(3) Safety devices, as defined in this subpart, may be installed and operated as necessary on any enclosure, closed-vent system, or control device used to comply with the requirements of paragraphs (e)(1) and (2) of this section.

(4) The closed-vent system must be designed and operated in accordance with the requirements of § 61.349.

[55 FR 8346, Mar. 7, 1990, as amended at 55 FR 18331, May 2, 1990; 58 FR 3096, Jan. 7, 1993; 67 FR 68532, Nov. 12, 2002; 68 FR 6082, Feb. 6, 2003; 68 FR 67935, Dec. 4, 2003]

§ 61.344 Standards: Surface impoundments.

(a) The owner or operator shall meet the following standards for each surface impoundment in which waste is placed in accordance with § 61.342(c)(1)(ii) of this subpart:

(1) The owner or operator shall install, operate, and maintain on each surface impoundment a cover (e.g., air-supported structure or rigid cover) and closed-vent system that routes all organic vapors vented from the surface impoundment to a control device.

(i) The cover shall meet the following requirements:

(A) The cover and all openings (e.g., access hatches, sampling ports, and gauge wells) shall be designed to operate with no detectable emissions as indicated by an instrument reading of less than 500 ppmv above background, initially and thereafter at least once per year by the methods specified in § 61.355(h) of this subpart.

(B) Each opening shall be maintained in a closed, sealed position (e.g., covered by a lid that is gasketed and latched) at all times that waste is in the surface impoundment except when it is necessary to use the opening for waste sampling or removal, or for equipment inspection, maintenance, or repair.

(C) If the cover and closed-vent system operate such that the enclosure of the surface impoundment is maintained at a pressure less than atmospheric pressure, then paragraph (a)(1)(i)(B) of this section does not apply to any opening that meets all of the following conditions:

(*1*) The purpose of the opening is to provide dilution air to reduce the explosion hazard;

(*2*) The opening is designed to operate with no detectable emissions as indicated by an instrument reading of less than 500 ppmv above background, as determined initially and thereafter at least once per year by the methods specified in § 61.355(h) of this subpart; and

(*3*) The pressure is monitored continuously to ensure that the pressure in the enclosure of the surface impoundment remains below atmospheric pressure.

(D) The cover shall be used at all times that waste is placed in the surface impoundment except during removal of treatment residuals in accordance with 40 CFR 268.4 or closure of the surface impoundment in accordance with 40 CFR 264.228. (Note: the treatment residuals generated by these activities may be subject to the requirements of this part.)

(ii) The closed-vent system and control device shall be designed and operated in accordance with § 61.349 of this subpart.

(b) Each cover seal, access hatch, and all other openings shall be checked by visual inspection initially and quarterly thereafter to ensure that no cracks or gaps occur and that access hatches and other openings are closed and gasketed properly.

(c) Except as provided in § 61.350 of this subpart, when a broken seal or gasket or other problem is identified, or when detectable emissions are measured, first efforts at repair shall be made as soon as practicable, but not later than 15 calendar days after identification.

[55 FR 8346, Mar. 7, 1990, as amended at 58 FR 3097, Jan. 7, 1993]

§ 61.345 Standards: Containers.

(a) The owner or operator shall meet the following standards for each container in which waste is placed in accordance with § 61.342(c)(1)(ii) of this subpart:

(1) The owner or operator shall install, operate, and maintain a cover on each container used to handle, transfer, or store waste in accordance with the following requirements:

(i) The cover and all openings (e.g., bungs, hatches, and sampling ports) shall be designed to operate with no detectable emissions as indicated by an instrument reading of less than 500 ppmv above background, initially and thereafter at least once per year by the methods specified in § 61.355(h) of this subpart.

(ii) Except as provided in paragraph (a)(4) of this section, each opening shall be maintained in a closed, sealed position (e.g., covered by a lid that is gasketed and latched) at all times that waste is in the container except when it is necessary to use the opening for waste loading, removal, inspection, or sampling.

(2) When a waste is transferred into a container by pumping, the owner or operator shall perform the transfer using a submerged fill pipe. The submerged fill pipe outlet shall extend to within two fill pipe diameters of the bottom of the container while the container is being loaded. During loading of the waste, the cover shall remain in place and all openings shall be maintained in a closed, sealed position except for those openings required for the submerged fill pipe, those openings required for venting of the container to prevent physical damage or permanent deformation of the container or cover, and any openings complying with paragraph (a)(4) of this section.

(3) Treatment of a waste in a container, including aeration, thermal or other treatment, must be performed by the owner or operator in a manner such that while the waste is being treated the container meets the standards specified in paragraphs (a)(3)(i) through (iii) of this section, except for covers and closed-vent systems that meet the requirements in paragraph (a)(4) of this section.

(i) The owner or operator must either:

(A) Vent the container inside a total enclosure which is exhausted through a closed-vent system to a control device in accordance with the requirements of paragraphs (a)(3)(ii)(A) and (B) of this section; or

(B) Vent the covered or closed container directly through a closed-vent system to a control device in accordance with the requirements of paragraphs (a)(3)(ii)(B) and (C) of this section.

(ii) The owner or operator must meet the following requirements, as applicable to the type of air emission control equipment selected by the owner or operator:

(A) The total enclosure must be designed and operated in accordance with the criteria for a permanent total enclosure as specified in section 5 of the “Procedure T—Criteria for and Verification of a Permanent or Temporary Total Enclosure” in 40 CFR 52.741, appendix B. The enclosure may have permanent or temporary openings to allow worker access; passage of containers through the enclosure by conveyor or other mechanical means; entry of permanent mechanical or electrical equipment; or direct airflow into the enclosure. The owner or operator must perform the verification procedure for the enclosure as specified in section 5.0 of “Procedure T—Criteria for and Verification of a Permanent or Temporary Total Enclosure” initially when the enclosure is first installed and, thereafter, annually. A facility that has conducted an initial compliance demonstration and that performs annual compliance demonstrations in accordance with the Container Level 3 control requirements in 40 CFR 264.1086(e)(2)(i) or 40 CFR 265.1086(e)(2)(i) is not required to make repeat demonstrations of initial and continuous compliance for the purposes of this subpart.

(B) The closed-vent system and control device must be designed and operated in accordance with the requirements of § 61.349.

(C) For a container cover, the cover and all openings (*e.g.,* doors, hatches) must be designed to operate with no detectable emissions as indicated by an instrument reading of less than 500 ppmv above background, initially and thereafter at least once per year by the methods specified in § 61.355(h).

(iii) Safety devices, as defined in this subpart, may be installed and operated as necessary on any container, enclosure, closed-vent system, or control device used to comply with the requirements of paragraph (a)(3)(i) of this section.

(4) If the cover and closed-vent system operate such that the container is maintained at a pressure less than atmospheric pressure, the owner or operator may operate the system with an opening that is not sealed and kept closed at all times if the following conditions are met:

(i) The purpose of the opening is to provide dilution air to reduce the explosion hazard;

(ii) The opening is designed to operate with no detectable emissions as indicated by an instrument reading of less than 500 ppmv above background, as determined initially and thereafter at least once per year by methods specified in § 61.355(h); and

(iii) The pressure is monitored continuously to ensure that the pressure in the container remains below atmospheric pressure.

(b) Each cover and all openings shall be visually inspected initially and quarterly thereafter to ensure that they are closed and gasketed properly.

(c) Except as provided in § 61.350 of this subpart, when a broken seal or gasket or other problem is identified, first efforts at repair shall be made as soon as practicable, but not later than 15 calendar days after identification.

[55 FR 8346, Mar. 7, 1990, as amended at 58 FR 3097, Jan. 7, 1993; 67 FR 68532, Nov. 12, 2002; 68 FR 67936, Dec. 4, 2003]

§ 61.346 Standards: Individual drain systems.

(a) Except as provided in paragraph (b) of this section, the owner or operator shall meet the following standards for each individual drain system in which waste is placed in accordance with § 61.342(c)(1)(ii) of this subpart:

(1) The owner or operator shall install, operate, and maintain on each drain system opening a cover and closed-vent system that routes all organic vapors vented from the drain system to a control device.

(i) The cover shall meet the following requirements:

(A) The cover and all openings (e.g., access hatches, sampling ports) shall be designed to operate with no detactable emissions as indicated by an instrument reading of less than 500 ppmv above background, initially and thereafter at least once per year by the methods specified in § 61.355(h) of this subpart.

(B) Each opening shall be maintained in a closed, sealed position (e.g., covered by a lid that is gasketed and latched) at all times that waste is in the drain system except when it is necessary to use the opening for waste sampling or removal, or for equipment inspection, maintenance, or repair.

(C) If the cover and closed-vent system operate such that the individual drain system is maintained at a pressure less than atmospheric pressure, then paragraph (a)(1)(i)(B) of this section does not apply to any opening that meets all of the following conditions:

(*1*) The purpose of the opening is to provide dilution air to reduce the explosion hazard;

(*2*) The opening is designed to operate with no detectable emissions as indicated by an instrument reading of less than 500 ppmv above background, as determined initially and thereafter at least once per year by the methods specified in § 61.355(h); and

(*3*) The pressure is monitored continuously to ensure that the pressure in the individual drain system remains below atmospheric pressure.

(ii) The closed-vent system and control device shall be designed and operated in accordance with § 61.349 of this subpart.

(2) Each cover seal, access hatch, and all other openings shall be checked by visual inspection initially and quarterly thereafter to ensure that no cracks or gaps occur and that access hatches and other openings are closed and gasketed properly.

(3) Except as provided in § 61.350 of this subpart, when a broken seal or gasket or other problem is identified, or when detectable emissions are measured, first efforts at repair shall be made as soon as practicable, but not later than 15 calendar days after identification.

(b) As an alternative to complying with paragraph (a) of this section, an owner or operator may elect to comply with the following requirements:

(1) Each drain shall be equipped with water seal controls or a tightly sealed cap or plug.

(2) Each junction box shall be equipped with a cover and may have a vent pipe. The vent pipe shall be at least 90 cm (3 ft) in length and shall not exceed 10.2 cm (4 in) in diameter.

(i) Junction box covers shall have a tight seal around the edge and shall be kept in place at all times, except during inspection and maintenance.

(ii) One of the following methods shall be used to control emissions from the junction box vent pipe to the atmosphere:

(A) Equip the junction box with a system to prevent the flow of organic vapors from the junction box vent pipe to the atmosphere during normal operation. An example of such a system includes use of water seal controls on the junction box. A flow indicator shall be installed, operated, and maintained on each junction box vent pipe to ensure that organic vapors are not vented from the junction box to the atmosphere during normal operation.

(B) Connect the junction box vent pipe to a closed-vent system and control device in accordance with § 61.349 of this subpart.

(3) Each sewer line shall not be open to the atmosphere and shall be covered or enclosed in a manner so as to have no visual gaps or cracks in joints, seals, or other emission interfaces.

(4) Equipment installed in accordance with paragraphs (b)(1), (b)(2), or (b)(3) of this section shall be inspected as follows:

(i) Each drain using water seal controls shall be checked by visual or physical inspection initially and thereafter quarterly for indications of low water levels or other conditions that would reduce the effectiveness of water seal controls.

(ii) Each drain using a tightly sealed cap or plug shall be visually inspected initially and thereafter quarterly to ensure caps or plugs are in place and properly installed.

(iii) Each junction box shall be visually inspected initially and thereafter quarterly to ensure that the cover is in place and to ensure that the cover has a tight seal around the edge.

(iv) The unburied portion of each sewer line shall be visually inspected initially and thereafter quarterly for indication of cracks, gaps, or other problems that could result in benzene emissions.

(5) Except as provided in § 61.350 of this subpart, when a broken seal, gap, crack or other problem is identified, first efforts at repair shall be made as soon as practicable, but not later than 15 calendar days after identification.

[55 FR 8346, Mar. 7, 1990, as amended at 55 FR 37231, Sept. 10, 1990; 58 FR 3097, Jan. 7, 1993]

§ 61.347 Standards: Oil-water separators.

(a) Except as provided in § 61.352 of this subpart, the owner or operator shall meet the following standards for each oil-water separator in which waste is placed in accordance with § 61.342(c)(1)(ii) of this subpart:

(1) The owner or operator shall install, operate, and maintain a fixed-roof and closed-vent system that routes all organic vapors vented from the oil-water separator to a control device.

(i) The fixed-roof shall meet the following requirements:

(A) The cover and all openings (e.g., access hatches, sampling ports, and gauge wells) shall be designed to operate with no detectable emissions as indicated by an instrument reading of less than 500 ppmv above background, as determined initially and thereafter at least once per year by the methods specified in § 61.355(h) of this subpart.

(B) Each opening shall be maintained in a closed, sealed position (e.g., covered by a lid that is gasketed and latched) at all times that waste is in the oil-water separator except when it is necessary to use the opening for waste sampling or removal, or for equipment inspection, maintenance, or repair.

(C) If the cover and closed-vent system operate such that the oil-water separator is maintained at a pressure less than atmospheric pressure, then paragraph (a)(1)(i)(B) of this section does not apply to any opening that meets all of the following conditions:

(*1*) The purpose of the opening is to provide dilution air to reduce the explosion hazard;

(*2*) The opening is designed to operate with no detectable emissions as indicated by an instrument reading of less than 500 ppmv above background, as determined initially and thereafter at least once per year by the methods specified in § 61.355(h); and

(*3*) The pressure is monitored continuously to ensure that the pressure in the oil-water separator remains below atmospheric pressure.

(ii) The closed-vent system and control device shall be designed and operated in accordance with the requirements of § 61.349 of this subpart.

(b) Each cover seal, access hatch, and all other openings shall be checked by visual inspection initially and quarterly thereafter to ensure that no cracks or gaps occur between the cover and oil-water separator wall and that access hatches and other openings are closed and gasketed properly.

(c) Except as provided in § 61.350 of this subpart, when a broken seal or gasket or other problem is identified, or when detectable emissions are measured, first efforts at repair shall be made as soon as practicable, but not later than 15 calendar days after identification.

[55 FR 8346, Mar. 7, 1990, as amended at 58 FR 3098, Jan. 7, 1993]

§ 61.348 Standards: Treatment processes.

(a) Except as provided in paragraph (a)(5) of this section, the owner or operator shall treat the waste stream in accordance with the following requirements:

(1) The owner or operator shall design, install, operate, and maintain a treatment process that either:

(i) Removes benzene from the waste stream to a level less than 10 parts per million by weight (ppmw) on a flow-weighted annual average basis,

(ii) Removes benzene from the waste stream by 99 percent or more on a mass basis, or

(iii) Destroys benzene in the waste stream by incinerating the waste in a combustion unit that achieves a destruction efficiency of 99 percent or greater for benzene.

(2) Each treatment process complying with paragraphs (a)(1)(i) or (a)(1)(ii) of this section shall be designed and operated in accordance with the appropriate waste management unit standards specified in §§ 61.343 through 61.347 of this subpart. For example, if a treatment process is a tank, then the owner or operator shall comply with § 61.343 of this subpart.

(3) For the purpose of complying with the requirements specified in paragraph (a)(1)(i) of this section, the intentional or unintentional reduction in the benzene concentration of a waste stream by dilution of the waste stream with other wastes or materials is not allowed.

(4) An owner or operator may aggregate or mix together individual waste streams to create a combined waste stream for the purpose of facilitating treatment of waste to comply with the requirements of paragraph (a)(1) of this section except as provided in paragraph (a)(5) of this section.

(5) If an owner or operator aggregates or mixes any combination of process wastewater, product tank drawdown, or landfill leachate subject to § 61.342(c)(1) of this subpart together with other waste streams to create a combined waste stream for the purpose of facilitating management or treatment of waste in a wastewater treatment system, then the wastewater treatment system shall be operated in accordance with paragraph (b) of this section. These provisions apply to above-ground wastewater treatment systems as well as those that are at or below ground level.

(b) Except for facilities complying with § 61.342(e), the owner or operator that aggregates or mixes individual waste streams as defined in paragraph (a)(5) of this section for management and treatment in a wastewater treatment system shall comply with the following requirements:

(1) The owner or operator shall design and operate each waste management unit that comprises the wastewater treatment system in accordance with the appropriate standards specified in §§ 61.343 through 61.347 of this subpart.

(2) The provisions of paragraph (b)(1) of this section do not apply to any waste management unit that the owner or operator demonstrates to meet the following conditions initially and, thereafter, at least once per year:

(i) The benzene content of each waste stream entering the waste management unit is less than 10 ppmw on a flow-weighted annual average basis as determined by the procedures specified in § 61.355(c) of this subpart; and

(ii) The total annual benzene quantity contained in all waste streams managed or treated in exempt waste management units comprising the facility wastewater treatment systems is less than 1 Mg/yr (1.1 ton/yr). For this determination, total annual benzene quantity shall be calculated as follows:

(A) The total annual benzene quantity shall be calculated as the sum of the individual benzene quantities determined at each location where a waste stream first enters an exempt waste management unit. The benzene quantity discharged from an exempt waste management unit shall not be included in this calculation.

(B) The annual benzene quantity in a waste stream managed or treated in an enhanced biodegradation unit shall not be included in the calculation of the total annual benzene quantity, if the enhanced biodegradation unit is the first exempt unit in which the waste is managed or treated. A unit shall be considered enhanced biodegradation if it is a suspended-growth process that generates biomass, uses recycled biomass, and periodically removes biomass from the process. An enhanced biodegradation unit typically operates at a food-to-microorganism ratio in the range of 0.05 to 1.0 kg of biological oxygen demand per kg of biomass per day, a mixed liquor suspended solids ratio in the range of 1 to 8 grams per liter (0.008 to 0.7 pounds per liter), and a residence time in the range of 3 to 36 hours.

(c) The owner and operator shall demonstrate that each treatment process or wastewater treatment system unit, except as provided in paragraph (d) of this section, achieves the appropriate conditions specified in paragraphs (a) or (b) of this section in accordance with the following requirements:

(1) Engineering calculations in accordance with requirements specified in § 61.356(e) of this subpart; or

(2) Performance tests conducted using the test methods and procedures that meet the requirements specified in § 61.355 of this subpart.

(d) A treatment process or waste stream is in compliance with the requirements of this subpart and exempt from the requirements of paragraph (c) of this section provided that the owner or operator documents that the treatment process or waste stream is in compliance with other regulatory requirements as follows:

(1) The treatment process is a hazardous waste incinerator for which the owner or operator has been issued a final permit under 40 CFR part 270 and complies with the requirements of 40 CFR part 264, subpart O;

(2) The treatment process is an industrial furnace or boiler burning hazardous waste for energy recovery for which the owner or operator has been issued a final permit under 40 CFR part 270 and complies with the requirements of 40 CFR part 266, subpart D;

(3) The waste stream is treated by a means or to a level that meets benzene-specific treatment standards in accordance with the Land Disposal Restrictions under 40 CFR part 268, and the treatment process is designed and operated with a closed-vent system and control device meeting the requirements of § 61.349 of this subpart;

(4) The waste stream is treated by a means or to a level that meets benzene-specific effluent limitations or performance standards in accordance with the Effluent Guidelines and Standards under 40 CFR parts 401-464, and the treatment process is designed and operated with a closed-vent system and control device meeting the requirements of § 61.349 of this subpart; or

(5) The waste stream is discharged to an underground injection well for which the owner or operator has been issued a final permit under 40 CFR part 270 and complies with the requirements of 40 CFR part 122.

(e) Except as specified in paragraph (e)(3) of this section, if the treatment process or wastewater treatment system unit has any openings (e.g., access doors, hatches, etc.), all such openings shall be sealed (e.g., gasketed, latched, etc.) and kept closed at all times when waste is being treated, except during inspection and maintenance.

(1) Each seal, access door, and all other openings shall be checked by visual inspections initially and quarterly thereafter to ensure that no cracks or gaps occur and that openings are closed and gasketed properly.

(2) Except as provided in § 61.350 of this subpart, when a broken seal or gasket or other problem is identified, first efforts at repair shall be made as soon as practicable, but not later than 15 calendar days after identification.

(3) If the cover and closed-vent system operate such that the treatment process and wastewater treatment system unit are maintained at a pressure less than atmospheric pressure, the owner or operator may operate the system with an opening that is not sealed and kept closed at all times if the following conditions are met:

(i) The purpose of the opening is to provide dilution air to reduce the explosion hazard;

(ii) The opening is designed to operate with no detectable emissions as indicated by an instrument reading of less than 500 ppmv above background, as determined initially and thereafter at least once per year by the methods specified in § 61.355(h); and

(iii) The pressure is monitored continuously to ensure that the pressure in the treatment process and wastewater treatment system unit remain below atmospheric pressure.

(f) Except for treatment processes complying with paragraph (d) of this section, the Administrator may request at any time an owner or operator demonstrate that a treatment process or wastewater treatment system unit meets the applicable requirements specified in paragraphs (a) or (b) of this section by conducting a performance test using the test methods and procedures as required in § 61.355 of this subpart.

(g) The owner or operator of a treatment process or wastewater treatment system unit that is used to comply with the provisions of this section shall monitor the unit in accordance with the applicable requirements in § 61.354 of this subpart.

[55 FR 8346, Mar. 7, 1990, as amended at 55 FR 37231, Sept. 10, 1990; 58 FR 3098, Jan. 7, 1993; 65 FR 62160, Oct. 17, 2000]

§ 61.349 Standards: Closed-vent systems and control devices.

(a) For each closed-vent system and control device used to comply with standards in accordance with §§ 61.343 through 61.348 of this subpart, the owner or operator shall properly design, install, operate, and maintain the closed-vent system and control device in accordance with the following requirements:

(1) The closed-vent system shall:

(i) Be designed to operate with no detectable emissions as indicated by an instrument reading of less than 500 ppmv above background, as determined initially and thereafter at least once per year by the methods specified in § 61.355(h) of this subpart.

(ii) Vent systems that contain any bypass line that could divert the vent stream away from a control device used to comply with the provisions of this subpart shall install, maintain, and operate according to the manufacturer's specifications a flow indicator that provides a record of vent stream flow away from the control device at least once every 15 minutes, except as provided in paragraph (a)(1)(ii)(B) of this section.

(A) The flow indicator shall be installed at the entrance to any bypass line that could divert the vent stream away from the control device to the atmosphere.

(B) Where the bypass line valve is secured in the closed position with a car-seal or a lock-and-key type configuration, a flow indicator is not required.

(iii) All gauging and sampling devices shall be gas-tight except when gauging or sampling is taking place.

(iv) For each closed-vent system complying with paragraph (a) of this section, one or more devices which vent directly to the atmosphere may be used on the closed-vent system provided each device remains in a closed, sealed position during normal operations except when the device needs to open to prevent physical damage or permanent deformation of the closed-vent system resulting from malfunction of the unit in accordance with good engineering and safety practices for handling flammable, explosive, or other hazardous materials.

(2) The control device shall be designed and operated in accordance with the following conditions:

(i) An enclosed combustion device (e.g., a vapor incinerator, boiler, or process heater) shall meet one of the following conditions:

(A) Reduce the organic emissions vented to it by 95 weight percent or greater;

(B) Achieve a total organic compound concentration of 20 ppmv (as the sum of the concentrations for individual compounds using Method 18) on a dry basis corrected to 3 percent oxygen; or

(C) Provide a minimum residence time of 0.5 seconds at a minimum temperature of 760 °C (1,400 °F). If a boiler or process heater issued as the control device, then the vent stream shall be introduced into the flame zone of the boiler or process heater.

(ii) A vapor recovery system (e.g., a carbon adsorption system or a condenser) shall recover or control the organic emissions vented to it with an efficiency of 95 weight percent or greater, or shall recover or control the benzene emissions vented to it with an efficiency of 98 weight percent or greater.

(iii) A flare shall comply with the requirements of 40 CFR 60.18.

(iv) A control device other than those described in paragraphs (a)(2) (i) through (iii) of this section may be used provided that the following conditions are met:

(A) The device shall recover or control the organic emissions vented to it with an efficiency of 95 weight percent or greater, or shall recover or control the benzene emissions vented to it with an efficiency of 98 weight percent or greater.

(B) The owner or operator shall develop test data and design information that documents the control device will achieve an emission control efficiency of either 95 percent or greater for organic compounds or 98 percent or greater for benzene.

(C) The owner or operator shall identify:

(*1*) The critical operating parameters that affect the emission control performance of the device;

(*2*) The range of values of these operating parameters that ensure the emission control efficiency specified in paragraph (a)(2)(iv)(A) of this section is maintained during operation of the device; and

(*3*) How these operating parameters will be monitored to ensure the proper operation and maintenance of the device.

(D) The owner or operator shall submit the information and data specified in paragraphs (a)(2)(iv) (B) and (C) of this section to the Administrator prior to operation of the alternative control device.

(E) The Administrator will determine, based on the information submitted under paragraph (a)(2)(iv)(D) of this section, if the control device subiect to paragraph (a)(2)(iv) of this section meets the requirements of § 61.349. The control device subject to paragraph (a)(2)(iv) of this section may be operated prior to receiving approval from the Administrator. However, if the Administrator determines that the control device does not meet the requirements of § 61.349, the facility may be subject to enforcement action beginning from the time the control device began operation.

(b) Each closed-vent system and control device used to comply with this subpart shall be operated at all times when waste is placed in the waste management unit vented to the control device except when maintenance or repair of the waste management unit cannot be completed without a shutdown of the control device.

(c) An owner and operator shall demonstrate that each control device, except for a flare, achieves the appropriate conditions specified in paragraph (a)(2) of this section by using one of the following methods:

(1) Engineering calculations in accordance with requirements specified in § 61.356(f) of this subpart; or

(2) Performance tests conducted using the test methods and procedures that meet the requirements specified in § 61.355 of this subpart.

(d) An owner or operator shall demonstrate compliance of each flare in accordance with paragraph (a)(2)(iii) of this section.

(e) The Administrator may request at any time an owner or operator demonstrate that a control device meets the applicable conditions specified in paragraph (a)(2) of this section by conducting a performance test using the test methods and procedures as required in § 61.355, and for control devices subject to paragraph (a)(2)(iv) of this section, the Administrator may specify alternative test methods and procedures, as appropriate.

(f) Each closed-vent system and control device shall be visually inspected initially and quarterly thereafter. The visual inspection shall include inspection of ductwork and piping and connections to covers and control devices for evidence of visable defects such as holes in ductwork or piping and loose connections.

(g) Except as provided in § 61.350 of this subpart, if visible defects are observed during an inspection, or if other problems are identified, or if detectable emissions are measured, a first effort to repair the closed-vent system and control device shall be made as soon as practicable but no later than 5 calendar days after detection. Repair shall be completed no later than 15 calendar days after the emissions are detected or the visible defect is observed.

(h) The owner or operator of a control device that is used to comply with the provisions of this section shall monitor the control device in accordance with § 61.354(c) of this subpart.

[55 FR 8346, Mar. 7, 1990; 55 FR 12444, Apr. 3, 1990, as amended at 55 FR 37231, Sept. 10, 1990; 58 FR 3098, Jan. 7, 1993; 65 FR 62160, Oct. 17, 2000]

§ 61.350 Standards: Delay of repair.

(a) Delay of repair of facilities or units that are subject to the provisions of this subpart will be allowed if the repair is technically impossible without a complete or partial facility or unit shutdown.

(b) Repair of such equipment shall occur before the end of the next facility or unit shutdown.

§ 61.351 Alternative standards for tanks.

(a) As an alternative to the standards for tanks specified in § 61.343 of this subpart, an owner or operator may elect to comply with one of the following:

(1) A fixed roof and internal floating roof meeting the requirements in 40 CFR 60.112b(a)(1);

(2) An external floating roof meeting the requirements of 40 CFR 60.112b (a)(2); or

(3) An alternative means of emission limitation as described in 40 CFR 60.114b.

(b) If an owner or operator elects to comply with the provisions of this section, then the owner or operator is exempt from the provisions of § 61.343 of this subpart applicable to the same facilities.

[55 FR 8346, Mar. 7, 1990, as amended at 55 FR 37231, Sept. 10, 1990]

§ 61.352 Alternative standards for oil-water separators.

(a) As an alternative to the standards for oil-water separators specified in § 61.347 of this subpart, an owner or operator may elect to comply with one of the following:

(1) A floating roof meeting the requirements in 40 CFR 60.693-2(a); or

(2) An alternative means of emission limitation as described in 40 CFR 60.694.

(b) For portions of the oil-water separator where it is infeasible to construct and operate a floating roof, such as over the weir mechanism, a fixed roof vented to a vapor control device that meets the requirements in §§ 61.347 and 61.349 of this subpart shall be installed and operated.

(c) Except as provided in paragraph (b) of this section, if an owner or operator elects to comply with the provisions of this section, then the owner or operator is exempt from the provisions in § 61.347 of this subpart applicable to the same facilities.

§ 61.353 Alternative means of emission limitation.

(a) If, in the Administrator's judgment, an alternative means of emission limitation will achieve a reduction in benzene emissions at least equivalent to the reduction in benzene emissions from the source achieved by the applicable design, equipment, work practice, or operational requirements in §§ 61.342 through 61.349, the Administrator will publish in the FEDERAL REGISTER a notice permitting the use of the alternative means for purposes of compliance with that requirement. The notice may condition the permission on requirements related to the operation and maintenance of the alternative means.

(b) Any notice under paragraph (a) of this section shall be published only after public notice and an opportunity for a hearing.

(c) Any person seeking permission under this section shall collect, verify, and submit to the Administrator information showing that the alternative means achieves equivalent emission reductions.

[55 FR 8346, Mar. 7, 1990, as amended at 58 FR 3099, Jan. 7, 1993]

§ 61.354 Monitoring of operations.

(a) Except for a treatment process or waste stream complying with § 61.348(d), the owner or operator shall monitor each treatment process or wastewater treatment system unit to ensure the unit is properly operated and maintained by one of the following monitoring procedures:

(1) Measure the benzene concentration of the waste stream exiting the treatment process complying with § 61.348(a)(1)(i) at least once per month by collecting and analyzing one or more samples using the procedures specified in § 61.355(c)(3).

(2) Install, calibrate, operate, and maintain according to manufacturer's specifications equipment to continuously monitor and record a process parameter (or parameters) for the treatment process or wastewater treatment system unit that indicates proper system operation. The owner or operator shall inspect at least once each operating day the data recorded by the monitoring equipment (e.g., temperature monitor or flow indicator) to ensure that the unit is operating properly.

(b) If an owner or operator complies with the requirements of § 61.348(b), then the owner or operator shall monitor each wastewater treatment system to ensure the unit is properly operated and maintained by the appropriate monitoring procedure as follows:

(1) For the first exempt waste management unit in each waste treatment train, other than an enhanced biodegradation unit, measure the flow rate, using the procedures of § 61.355(b), and the benzene concentration of each waste stream entering the unit at least once per month by collecting and analyzing one or more samples using the procedures specified in § 61.355(c)(3).

(2) For each enhanced biodegradation unit that is the first exempt waste management unit in a treatment train, measure the benzene concentration of each waste stream entering the unit at least once per month by collecting and analyzing one or more samples using the procedures specified in § 61.355(c)(3).

(c) An owner or operator subject to the requirements in § 61.349 of this subpart shall install, calibrate, maintain, and operate according to the manufacturer's specifications a device to continuously monitor the control device operation as specified in the following paragraphs, unless alternative monitoring procedures or requirements are approved for that facility by the Administrator. The owner or operator shall inspect at least once each operating day the data recorded by the monitoring equipment (e.g., temperature monitor or flow indicator) to ensure that the control device is operating properly.

(1) For a thermal vapor incinerator, a temperature monitoring device equipped with a continuous recorder. The device shall have an accuracy of ±1 percent of the temperature being monitored in °C or ±0.5 °C, whichever is greater. The temperature sensor shall be installed at a representative location in the combustion chamber.

(2) For a catalytic vapor incinerator, a temperature monitoring device equipped with a continuous recorder. The device shall be capable of monitoring temperature at two locations, and have an accuracy of ±1 percent of the temperature being monitored in °C or ±0.5 °C, whichever is greater. One temperature sensor shall be installed in the vent stream at the nearest feasible point to the catalyst bed inlet and a second temperature sensor shall be installed in the vent stream at the nearest feasible point to the catalyst bed outlet.

(3) For a flare, a monitoring device in accordance with 40 CFR 60.18(f)(2) equipped with a continuous recorder.

(4) For a boiler or process heater having a design heat input capacity less than 44 MW (150×10^6 BTU/hr), a temperature monitoring device equipped with a continuous recorder. The device shall have an accuracy of ±1 percent of the temperature being monitored in °C or ±0.5 °C, whichever is greater. The temperature sensor shall be installed at a representative location in the combustion chamber.

(5) For a boiler or process heater having a design heat input capacity greater than or equal to 44 MW (150×10^6 BTU/hr), a monitoring device equipped with a continuous recorder to measure a parameter(s) that indicates good combustion operating practices are being used.

(6) For a condenser, either:

(i) A monitoring device equipped with a continuous recorder to measure either the concentration level of the organic compounds or the concentration level of benzene in the exhaust vent stream from the condenser; or

(ii) A temperature monitoring device equipped with a continuous recorder. The device shall be capable of monitoring temperature at two locations, and have an accuracy of ±1 percent of the temperature being monitored in °C or ±0.5 °C, whichever is greater. One temperature sensor shall be installed at a location in the exhaust stream from the condenser, and a second temperature sensor shall be installed at a location in the coolant fluid exiting the condenser.

(7) For a carbon adsorption system that regenerates the carbon bed directly in the control device such as a fixed-bed carbon adsorber, either:

(i) A monitoring device equipped with a continuous recorder to measure either the concentration level of the organic compounds or the benzene concentration level in the exhaust vent stream from the carbon bed; or

(ii) A monitoring device equipped with a continuous recorder to measure a parameter that indicates the carbon bed is regenerated on a regular, predetermined time cycle.

(8) For a vapor recovery system other than a condenser or carbon adsorption system, a monitoring device equipped with a continuous recorder to measure either the concentration level of the organic compounds or the benzene concentration level in the exhaust vent stream from the control device.

(9) For a control device subject to the requirements of § 61.349(a)(2)(iv), devices to monitor the parameters as specified in § 61.349(a)(2)(iv)(C).

(d) For a carbon adsorption system that does not regenerate the carbon bed directly on site in the control device (e.g., a carbon canister), either the concentration level of the organic compounds or the concentration level of benzene in the exhaust vent stream from the carbon adsorption system shall be monitored on a regular schedule, and the existing carbon shall be replaced with fresh carbon immediately when carbon breakthrough is indicated. The device shall be monitored on a daily basis or at intervals no greater than 20 percent of the design carbon replacement interval, whichever is greater. As an alternative to conducting this monitoring, an owner or operator may replace the carbon in the carbon adsorption system with fresh carbon at a regular predetermined time interval that is less than the carbon replacement interval that is determined by the maximum design flow rate and either the organic concentration or the benzene concentration in the gas stream vented to the carbon adsorption system.

(e) An alternative operation or process parameter may be monitored if it can be demonstrated that another parameter will ensure that the control device is operated in conformance with these standards and the control device's design specifications.

(f) Owners or operators using a closed-vent system that contains any bypass line that could divert a vent stream from a control device used to comply with the provisions of this subpart shall do the following:

(1) Visually inspect the bypass line valve at least once every month, checking the position of the valve and the condition of the car-seal or closure mechanism required under § 61.349(a)(1)(ii) to ensure that the valve is maintained in the closed position and the vent stream is not diverted through the bypass line.

(2) Visually inspect the readings from each flow monitoring device required by § 61.349(a)(1)(ii) at least once each operating day to check that vapors are being routed to the control device as required.

(g) Each owner or operator who uses a system for emission control that is maintained at a pressure less than atmospheric pressure with openings to provide dilution air shall install, calibrate, maintain, and operate according to the manufacturer's specifications a device equipped with a continuous recorder to monitor the pressure in the unit to ensure that it is less than atmospheric pressure.

[55 FR 8346, Mar. 7, 1990, as amended at 58 FR 3099, Jan. 7, 1993; 65 FR 62160, Oct. 17, 2000]

§ 61.355 Test methods, procedures, and compliance provisions.

(a) An owner or operator shall determine the total annual benzene quantity from facility waste by the following procedure:

(1) For each waste stream subject to this subpart having a flow-weighted annual average water content greater than 10 percent water, on a volume basis as total water, or is mixed with water or other wastes at any time and the resulting mixture has an annual average water content greater than 10 percent as specified in § 61.342(a), the owner or operator shall:

(i) Determine the annual waste quantity for each waste stream using the procedures specified in paragraph (b) of this section.

(ii) Determine the flow-weighted annual average benzene concentration for each waste stream using the procedures specified in paragraph (c) of this section.

(iii) Calculate the annual benzene quantity for each waste stream by multiplying the annual waste quantity of the waste stream times the flow-weighted annual average benzene concentration.

(2) Total annual benzene quantity from facility waste is calculated by adding together the annual benzene quantity for each waste stream generated during the year and the annual benzene quantity for each process unit turnaround waste annualized according to paragraph (b)(4) of this section.

(3) If the total annual benzene quantity from facility waste is equal to or greater than 10 Mg/yr (11 ton/yr), then the owner or operator shall comply with the requirements of § 61.342 (c), (d), or (e).

(4) If the total annual benzene quantity from facility waste is less than 10 Mg/yr (11 ton/yr) but is equal to or greater than 1 Mg/yr (1.1 ton/yr), then the owner or operator shall:

(i) Comply with the recordkeeping requirements of § 61.356 and reporting requirements of § 61.357 of this subpart; and

(ii) Repeat the determination of total annual benzene quantity from facility waste at least once per year and whenever there is a change in the process generating the waste that could cause the total annual benzene quantity from facility waste to increase to 10 Mg/yr (11 ton/yr) or more.

(5) If the total annual benzene quantity from facility waste is less than 1 Mg/yr (1.1 ton/yr), then the owner or operator shall:

(i) Comply with the recordkeeping requirements of § 61.356 and reporting requirements of § 61.357 of this subpart; and

(ii) Repeat the determination of total annual benzene quantity from facility waste whenever there is a change in the process generating the waste that could cause the total annual benzene quantity from facility waste to increase to 1 Mg/yr (1.1 ton/yr) or more.

(6) The benzene quantity in a waste stream that is generated less than one time per year, except as provided for process unit turnaround waste in paragraph (b)(4) of this section, shall be included in the determination of total annual benzene quantity from facility waste for the year in which the waste is generated unless the waste stream is otherwise excluded from the determination of total annual benzene quantity from facility waste in accordance with paragraphs (a) through (c) of this section. The benzene quantity in this waste stream shall not be annualized or averaged over the time interval between the activities that resulted in generation of the waste, for purposes of determining the total annual benzene quantity from facility waste.

(b) For purposes of the calculation required by paragraph (a) of this section, an owner or operator shall determine the annual waste quantity at the point of waste generation, unless otherwise provided in paragraphs (b) (1), (2), (3), and (4) of this section, by one of the methods given in paragraphs (b) (5) through (7) of this section.

(1) The determination of annual waste quantity for sour water streams that are processed in sour water strippers shall be made at the point that the water exits the sour water stripper.

(2) The determination of annual waste quantity for wastes at coke by-product plants subject to and complying with the control requirements of § 61.132, 61.133, 61.134, or 61.139 of subpart L of this part shall be made at the location that the waste stream exits the process unit component or waste management unit controlled by that subpart or at the exit of the ammonia still, provided that the following conditions are met:

(i) The transfer of wastes between units complying with the control requirements of subpart L of this part, process units, and the ammonia still is made through hard piping or other enclosed system.

(ii) The ammonia still meets the definition of a sour water stripper in § 61.341.

(3) The determination of annual waste quantity for wastes that are received at hazardous waste treatment, storage, or disposal facilities from offsite shall be made at the point where the waste enters the hazardous waste treatment, storage, or disposal facility.

(4) The determination of annual waste quantity for each process unit turnaround waste generated only at 2 year or greater intervals, may be made by dividing the total quantity of waste generated during the most recent process unit turnaround by the time period (in the nearest tenth of a year) between the turnaround resulting in generation of the waste and the most recent preceding process turnaround for the unit. The resulting annual waste quantity shall be included in the calculation of the annual benzene quantity as provided in paragraph (a)(1)(iii) of this section for the year in which the turnaround occurs and for each subsequent year until the unit undergoes the next process turnaround. For estimates of total annual benzene quantity as specified in the 90-day report, required under § 61.357(a)(1), the owner or operator shall estimate the waste quantity generated during the most recent turnaround, and the time period between turnarounds in accordance with good engineering practices. If the owner or operator chooses not to annualize process unit turnaround waste, as specified in this paragraph, then the process unit turnaround waste quantity shall be included in the calculation of the annual benzene quantity for the year in which the turnaround occurs.

(5) Select the highest annual quantity of waste managed from historical records representing the most recent 5 years of operation or, if the facility has been in service for less than 5 years but at least 1 year, from historical records representing the total operating life of the facility;

(6) Use the maximum design capacity of the waste management unit; or

(7) Use measurements that are representative of maximum waste generation rates.

(c) For the purposes of the calculation required by §§ 61.355(a) of this subpart, an owner or operator shall determine the flow-weighted annual average ben- zene concentration in a manner that meets the requirements given in paragraph (c)(1) of this section using either of the methods given in paragraphs (c)(2) and (c)(3) of this section.

(1) The determination of flow-weighted annual average benzene concentration shall meet all of the following criteria:

(i) The determination shall be made at the point of waste generation except for the specific cases given in paragraphs (c)(1)(i)(A) through (D) of this section.

(A) The determination for sour water streams that are processed in sour water strippers shall be made at the point that the water exits the sour water stripper.

(B) The determination for wastes at coke by-product plants subject to and complying with the control requirements of § 61.132, 61.133, 61.134, or 61.139 of subpart L of this part shall be made at the location that the waste stream exits the process unit component or waste management unit controlled by that subpart or at the exit of the ammonia still, provided that the following conditions are met:

(*1*) The transfer of wastes between units complying with the control requirements of subpart L of this part, process units, and the ammonia still is made through hard piping or other enclosed system.

(*2*) The ammonia still meets the definition of a sour water stripper in § 61.341.

(C) The determination for wastes that are received from offsite shall be made at the point where the waste enters the hazardous waste treatment, storage, or disposal facility.

(D) The determination of flow-weighted annual average benzene concentration for process unit turnaround waste shall be made using either of the methods given in paragraph (c)(2) or (c)(3) of this section. The resulting flow-weighted annual average benzene concentration shall be included in the calculation of annual benzene quantity as provided in paragraph (a)(1)(iii) of this section for the year in which the turnaround occurs and for each subsequent year until the unit undergoes the next process unit turnaround.

(ii) Volatilization of the benzene by exposure to air shall not be used in the determination to reduce the benzene concentration.

(iii) Mixing or diluting the waste stream with other wastes or other materials shall not be used in the determination—to reduce the benzene concentration.

(iv) The determination shall be made prior to any treatment of the waste that removes benzene, except as specified in paragraphs (c)(1)(i)(A) through (D) of this section.

(v) For wastes with multiple phases, the determination shall provide the weighted-average benzene concentration based on the benzene concentration in each phase of the waste and the relative proportion of the phases.

(2) *Knowledge of the waste.* The owner or operator shall provide sufficient information to document the flow-weighted annual average benzene concentration of each waste stream. Examples of information that could constitute knowledge include material balances, records of chemicals purchases, or previous test results provided the results are still relevant to the current waste stream conditions. If test data are used, then the owner or operator shall provide documentation describing the testing protocol and the means by which sampling variability and analytical variability were accounted for in the determination of the flow-weighted annual average benzene concentration for the waste stream. When an owner or operator and the Administrator do not agree on determinations of the flow-weighted annual average benzene concentration based on knowledge of the waste, the procedures under paragraph (c)(3) of this section shall be used to resolve the disagreement.

(3) Measurements of the benzene concentration in the waste stream in accordance with the following procedures:

(i) Collect a minimum of three representative samples from each waste stream. Where feasible, samples shall be taken from an enclosed pipe prior to the waste being exposed to the atmosphere.

(ii) For waste in enclosed pipes, the following procedures shall be used:

(A) Samples shall be collected prior to the waste being exposed to the atmosphere in order to minimize the loss of benzene prior to sampling.

(B) A static mixer shall be installed in the process line or in a by-pass line unless the owner or operator demonstrates that installation of a static mixer in the line is not necessary to accurately determine the benzene concentration of the waste stream.

(C) The sampling tap shall be located within two pipe diameters of the static mixer outlet.

(D) Prior to the initiation of sampling, sample lines and cooling coil shall be purged with at least four volumes of waste.

(E) After purging, the sample flow shall be directed to a sample container and the tip of the sampling tube shall be kept below the surface of the waste during sampling to minimize contact with the atmosphere.

(F) Samples shall be collected at a flow rate such that the cooling coil is able to maintain a waste temperature less than 10 °C (50 °F).

(G) After filling, the sample container shall be capped immediately (within 5 seconds) to leave a minimum headspace in the container.

(H) The sample containers shall immediately be cooled and maintained at a temperature below 10 °C (50 °F) for transfer to the laboratory.

(iii) When sampling from an enclosed pipe is not feasible, a minimum of three representative samples shall be collected in a manner to minimize exposure of the sample to the atmosphere and loss of benzene prior to sampling.

(iv) Each waste sample shall be analyzed using one of the following test methods for determining the benzene concentration in a waste stream:

(A) Method 8020, Aromatic Volatile Organics, in “Test Methods for Evaluating Solid Waste, Physical/Chemical Methods,” EPA Publication No. SW-846 (incorporation by reference as specified in § 61.18 of this part);

(B) Method 8021, Volatile Organic Compounds in Water by Purge and Trap Capillary Column Gas Chromatography with Photoionization and Electrolytic Conductivity Detectors in Series in “Test Methods for Evaluating Solid Waste, Physical/Chemical Methods,” EPA Publication No. SW-846 (incorporation by reference as specified in § 61.18 of this part);

(C) Method 8240, Gas Chromatography/Mass Spectrometry for Volatile Organics in “Test Methods for Evaluating Solid Waste, Physical/Chemical Methods,” EPA Publication No. SW-846 (incorporation by reference as specified in § 61.18 of this part);

(D) Method 8260, Gas Chromatography/Mass Spectrometry for Volatile Organics: Capillary Column Technique in “Test Methods for Evaluating Solid Waste, Physical/Chemical Methods,” EPA Publication No. SW-846 (incorporation by reference as specified in § 61.18 of this part);

(E) Method 602, Purgeable Aromatics, as described in 40 CFR part 136, appendix A, Test Procedures for Analysis of Organic Pollutants, for wastewaters for which this is an approved EPA methods; or

(F) Method 624, Purgeables, as described in 40 CFR part 136, appendix A, Test Procedures for Analysis of Organic Pollutants, for wastewaters for which this is an approved EPA method.

(v) The flow-weighted annual average benzene concentration shall be calculated by averaging the results of the sample analyses as follows:

$$\bar{C} = \frac{1}{Q_t} \times \sum_{i=1}^{N} (Q_i)(C_i)$$

Where:

C=Flow-weighted annual average benzene concentration for waste stream, ppmw.

Q_t =Total annual waste quantity for waste stream, kg/yr (lb/yr).

n=Number of waste samples (at least 3).

Q_i =Annual waste quantity for waste stream represented by C_i , kg/yr (lb/yr).

C_i =Measured concentration of benzene in waste sample i, ppmw.

(d) An owner or operator using performance tests to demonstrate compliance of a treatment process with § 61.348 (a)(1)(i) shall measure the flow-weighted annual average benzene concentration of the waste stream exiting the treatment process by collecting and analyzing a minimum of three representative samples of the waste stream using the procedures in paragraph (c)(3) of this section. The test shall be conducted under conditions that exist when the treatment process is operating at the highest inlet waste stream flow rate and benzene content expected to occur. Operations during periods of startup, shutdown, and malfunction shall not constitute representative conditions for the purpose of a test. The owner or operator shall record all process information as is necessary to document the operating conditions during the test.

(e) An owner or operator using performance tests to demonstrate compliance of a treatment process with § 61.348(a)(1)(ii) of this subpart shall determine the percent reduction of benzene in the waste stream on a mass basis by the following procedure:

(1) The test shall be conducted under conditions that exist when the treatment process is operating at the highest inlet waste stream flow rate and benzene content expected to occur. Operations during periods of startup, shutdown, and malfunction shall not constitute representative conditions for the purpose of a test. The owner or operator shall record all process information as is necessary to document the operating conditions during the test.

(2) All testing equipment shall be prepared and installed as specified in the appropriate test methods.

(3) The mass flow rate of benzene entering the treatment process (E_b) shall be determined by computing the product of the flow rate of the waste stream entering the treatment process, as determined by the inlet flow meter, and the benzene concentration of the waste stream, as determined using the sampling and analytical procedures specified in paragraph (c)(2) or (c)(3) of this section. Three grab samples of the waste shall be taken at equally spaced time intervals over a 1-hour period. Each 1-hour period constitutes a run, and the performance test shall consist of a minimum of 3 runs conducted over a 3-hour period. The mass flow rate of benzene entering the treatment process is calculated as follows:

$$E_b = \frac{K}{n \times 10^6}\left[\sum_{i=1}^{n} V_i C_i\right]$$

Where:

E_b = Mass flow rate of benzene entering the treatment process, kg/hr (lb/hr).

K = Density of the waste stream, kg/m^3 (lb/ft^3).

V_i = Average volume flow rate of waste entering the treatment process during each run i, m^3 /hr (ft^3 /hr).

C_i = Average concentration of benzene in the waste stream entering the treatment process during each run i, ppmw.

n = Number of runs.

10^6 = Conversion factor for ppmw.

(4) The mass flow rate of benzene exiting the treatment process (E_a) shall be determined by computing the product of the flow rate of the waste stream exiting the treatment process, as determined by the outlet flow meter or the inlet

flow meter, and the benzene concentration of the waste stream, as determined using the sampling and analytical procedures specified in paragraph (c)(2) or (c)(3) of this section. Three grab samples of the waste shall be taken at equally spaced time intervals over a 1-hour period. Each 1-hour period constitutes a run, and the performance test shall consist of a minimum of 3 runs conducted over the same 3-hour period at which the mass flow rate of benzene entering the treatment process is determined. The mass flow rate of benzene exiting the treatment process is calculated as follows:

$$E_a = \frac{K}{n \times 10^6}\left[\sum_{i=1}^{n} V_i C_i\right]$$

Where:

E_a = Mass flow rate of benzene exiting the treatment process, kg/hr (lb/hr).

K = Density of the waste stream, kg/m^3 (lb/ft^3).

V_i = Average volume flow rate of waste exiting the treatment process during each run i, m^3 /hr (ft^3 /hr).

C_i = Average concentration of benzene in the waste stream exiting the treatment process during each run i, ppmw.

n = Number of runs.

10^6 = Conversion factor for ppmw.

(f) An owner or operator using performance tests to demonstrate compliance of a treatment process with § 61.348(a)(1)(iii) of this subpart shall determine the benzene destruction efficiency for the combustion unit by the following procedure:

(1) The test shall be conducted under conditions that exist when the combustion unit is operating at the highest inlet waste stream flow rate and benzene content expected to occur. Operations during periods of startup, shutdown, and malfunction shall not constitute representative conditions for the purpose of a test. The owner or operator shall record all process information necessary to document the operating conditions during the test.

(2) All testing equipment shall be prepared and installed as specified in the appropriate test methods.

(3) The mass flow rate of benzene entering the combustion unit shall be determined by computing the product of the flow rate of the waste stream entering the combustion unit, as determined by the inlet flow meter, and the benzene concentration of the waste stream, as determined using the sampling procedures in paragraph (c)(2) or (c)(3) of this section. Three grab samples of the waste shall be taken at equally spaced time intervals over a 1-hour period. Each 1-hour period constitutes a run, and the performance test shall consist of a minimum of 3 runs conducted over a 3-hour period. The mass flow rate of benzene into the combustion unit is calculated as follows:

$$E_b = \frac{K}{n \times 10^6}\left[\sum_{i=1}^{n} V_i C_i\right]$$

Where:

E_b = Mass flow rate of benzene entering the combustion unit, kg/hr (lb/hr).

K = Density of the waste stream, kg/m^3 (lb/ft^3).

V_i = Average volume flow rate of waste entering the combustion unit during each run i, m^3 /hr (ft^3 /hr).

C_i = Average concentration of benzene in the waste stream entering the combustion unit during each run i, ppmw.

n = Number of runs.

10^6 = Conversion factor for ppmw.

(4) The mass flow rate of benzene exiting the combustion unit exhaust stack shall be determined as follows:

(i) The time period for the test shall not be less than 3 hours during which at least 3 stack gas samples are collected and be the same time period at which the mass flow rate of benzene entering the treatment process is determined. Each sample shall be collected over a 1-hour period (e.g., in a tedlar bag) to represent a time-integrated composite sample and each 1-hour period shall correspond to the periods when the waste feed is sampled.

(ii) A run shall consist of a 1-hour period during the test. For each run:

(A) The reading from each measurement shall be recorded;

(B) The volume exhausted shall be determined using Method 2, 2A, 2C, or 2D from appendix A of 40 CFR part 60, as appropriate.

(C) The average benzene concentration in the exhaust downstream of the combustion unit shall be determined using Method 18 from appendix A of 40 CFR part 60.

(iii) The mass of benzene emitted during each run shall be calculated as follows:

$$M_i = D_b VC\left(10^{-6}\right)$$

Where:

M_i = Mass of benzene emitted during run i, kg (lb).

V = Volume of air-vapor mixture exhausted at standard conditions, m^3 (ft^3).

C = Concentration of benzene measured in the exhaust, ppmv.

D_b = Density of benzene, 3.24 kg/m^3 (0.202 lb/ft^3).

10^6 = Conversion factor for ppmv.

(iv) The benzene mass emission rate in the exhaust shall be calculated as follows:

$$E_a = \left(\sum_{i=1}^{n} M_i\right) / T$$

Where:

E_a = Mass flow rate of benzene emitted from the combustion unit, kg/hr (lb/hr).

M_i = Mass of benzene emitted from the combustion unit during run i, kg (lb).

T = Total time of all runs, hr.

n = Number of runs.

(5) The benzene destruction efficiency for the combustion unit shall be calculated as follows:

$$R = \frac{E_b - E_a}{E_b} \times 100$$

Where:

R = Benzene destruction efficiency for the combustion unit, percent.

E_b = Mass flow rate of benzene entering the combustion unit, kg/hr (lb/hr).

E_a = Mass flow rate of benzene emitted from the combustion unit, kg/hr (lb/hr).

(g) An owner or operator using performance tests to demonstrate compliance of a wastewater treatment system unit with § 61.348(b) shall measure the flow-weighted annual average benzene concentration of the wastewater stream where the waste stream enters an exempt waste management unit by collecting and analyzing a minimum of three representative samples of the waste stream using the procedures in paragraph (c)(3) of this section. The test shall be conducted under conditions that exist when the wastewater treatment system is operating at the highest inlet wastewater stream flow rate and benzene content expected to occur. Operations during periods of startup, shutdown, and malfunction shall not constitute representative conditions for the purpose of a test. The owner or operator shall record all process information as is necessary to document the operating conditions during the test.

(h) An owner or operator shall test equipment for compliance with no detectable emissions as required in §§ 61.343 through 61.347, and § 61.349 of this subpart in accordance with the following requirements:

(1) Monitoring shall comply with Method 21 from appendix A of 40 CFR part 60.

(2) The detection instrument shall meet the performance criteria of Method 21.

(3) The instrument shall be calibrated before use on each day of its use by the procedures specified in Method 21.

(4) Calibration gases shall be:

(i) Zero air (less than 10 ppm of hydrocarbon in air); and

(ii) A mixture of methane or n-hexane and air at a concentration of approximately, but less than, 10,000 ppm methane or n-hexane.

(5) The background level shall be determined as set forth in Method 21.

(6) The instrument probe shall be traversed around all potential leak interfaces as close as possible to the interface as described in Method 21.

(7) The arithmetic difference between the maximum concentration indicated by the instrument and the background level is compared to 500 ppm for determining compliance.

(i) An owner or operator using a performance test to demonstrate compliance of a control device with either the organic reduction efficiency requirement or the benzene reduction efficiency requirement specified under § 61.349(a)(2) shall use the following procedures:

(1) The test shall be conducted under conditions that exist when the waste management unit vented to the control device is operating at the highest load or capacity level expected to occur. Operations during periods of startup, shutdown, and malfunction shall not constitute representative conditions for the purpose of a test. The owner or operator shall record all process information necessary to document the operating conditions during the test.

(2) Sampling sites shall be selected using Method 1 or 1A from appendix A of 40 CFR part 60, as appropriate.

(3) The mass flow rate of either the organics or benzene entering and exiting the control device shall be determined as follows:

(i) The time period for the test shall not be less than 3 hours during which at least 3 stack gas samples are collected. Samples of the vent stream entering and exiting the control device shall be collected during the same time period. Each sample shall be collected over a 1-hour period (e.g., in a tedlar bag) to represent a time-integrated composite sample.

(ii) A run shall consist of a 1-hour period during the test. For each run:

(A) The reading from each measurement shall be recorded;

(B) The volume exhausted shall be determined using Method 2, 2A, 2C, or 2D from appendix A of 40 CFR part 60, as appropriate;

(C) The organic concentration or the benzene concentration, as appropriate, in the vent stream entering and exiting the control shall be determined using Method 18 from appendix A of 40 CFR part 60.

(iii) The mass of organics or benzene entering and exiting the control device during each run shall be calculated as follows:

$$M_{aj} = \frac{K_1 V_{aj}}{10^6}\left(\sum_{i=1}^{n} C_{ai} MW_i\right) \quad M_{bj} = \frac{K_1 V_{bj}}{10^6}\left(\sum_{i=1}^{n} C_{bi} MW_i\right)$$

M_{aj} = Mass of organics or benzene in the vent stream entering the control device during run j, kg (lb).

M_{bj} = Mass of organics or benzene in the vent stream exiting the control device during run j, kg (lb).

V_{aj} = Volume of vent stream entering the control device during run j, at standard conditions, m^3 (ft^3).

V_{bj} = Volume of vent stream exiting the control device during run j, at standard conditions, m^3 (ft^3).

C_{ai} = Organic concentration of compound i or the benzene concentration measured in the vent stream entering the control device as determined by Method 18, ppm by volume on a dry basis.

C_{bi} = Organic concentration of compound i or the benzene concentration measured in the vent stream exiting the control device as determined by Method 18, ppm by volume on a dry basis.

MW_i = Molecular weight of organic compound i in the vent stream, or the molecular weight of benzene, kg/kg-mol (lb/lb-mole).

n = Number of organic compounds in the vent stream; if benzene reduction efficiency is being demonstrated, then n=1.

K_1 = Conversion factor for molar volume at standard conditions (293 K and 760 mm Hg (527 R and 14.7 psia))

= 0.0416 kg-mol/m^3 (0.00118 lb-mol/ft^3)

10^{-6} =Conversion factor for ppmv.

(iv) The mass flow rate of organics or benzene entering and exiting the control device shall be calculated as follows:

$$E_a - \left(\sum_{j=1}^{n} M_{aj}\right) / T$$

$$E_b - \left(\sum_{j=1}^{n} M_{bj}\right) / T$$

Where:

E_a = Mass flow rate of organics or benzene entering the control device, kg/hr (lb/hr).

E_b = Mass flow rate of organics or benzene exiting the control device, kg/hr (lb/hr).

M_{aj} = Mass of organics or benzene in the vent stream entering the control device during run j, kg (lb).

M_{bj} = Mass of organics or benzene in the vent stream exiting the control device during run j, kg (lb).

T = Total time of all runs, hr.

n = Number of runs.

(4) The organic reduction efficiency or the benzene reduction efficiency for the control device shall be calculated as follows:

$$R = \frac{E_a - E_b}{E_a} \times 100$$

Where:

R = Total organic reduction of efficiency or benzene reduction efficiency for the control device, percent.

E_b = Mass flow rate of organics or benzene entering the control device, kg/hr (lb/hr).

E_a = Mass flow rate of organic or benzene emitted from the control device, kg/hr (lb/hr).

(j) An owner or operator shall determine the benzene quantity for the purposes of the calculation required by § 61.342 (c)(3)(ii)(B) according to the provisions of paragraph (a) of this section, except that the procedures in paragraph (a) of this section shall also apply to wastes with a water content of 10 percent or less.

(k) An owner or operator shall determine the benzene quantity for the purposes of the calculation required by § 61.342(e)(2) by the following procedure:

(1) For each waste stream that is not controlled for air emissions in accordance with § 61.343. 61.344, 61.345, 61.346, 61.347, or 61.348(a), as applicable to the waste management unit that manages the waste, the benzene quantity shall be determined as specified in paragraph (a) of this section, except that paragraph (b)(4) of this section shall not apply, i.e., the waste quantity for process unit turnaround waste is not annualized but shall be included in the

determination of benzene quantity for the year in which the waste is generated for the purposes of the calculation required by § 61.342(e)(2).

(2) For each waste stream that is controlled for air emissions in accordance with § 61.343. 61.344, 61.345, 61.346, 61.347, or 61.348(a), as applicable to the waste management unit that manages the waste, the determination of annual waste quantity and flow-weighted annual average benzene concentration shall be made at the first applicable location as described in paragraphs (k)(2)(i), (k)(2)(ii), and (k)(2)(iii) of this section and prior to any reduction of benzene concentration through volatilization of the benzene, using the methods given in (k)(2)(iv) and (k)(2)(v) of this section.

(i) Where the waste stream enters the first waste management unit not complying with §§ 61.343, 61.344, 61.345, 61.346, 61.347, and 61.348(a) that are applicable to the waste management unit,

(ii) For each waste stream that is managed or treated only in compliance with §§ 61.343 through 61.348(a) up to the point of final direct discharge from the facility, the determination of benzene quantity shall be prior to any reduction of benzene concentration through volatilization of the benzene, or

(iii) For wastes managed in units controlled for air emissions in accordance with §§ 61.343, 61.344, 61.345, 61.346, 61.347, and 61.348(a), and then transferred offsite, facilities shall use the first applicable offsite location as described in paragraphs (k)(2)(i) and (k)(2)(ii) of this section if they have documentation from the offsite facility of the benzene quantity at this location. Facilities without this documentation for offsite wastes shall use the benzene quantity determined at the point where the transferred waste leaves the facility.

(iv) Annual waste quantity shall be determined using the procedures in paragraphs (b)(5), (6), or (7) of this section, and

(v) The flow-weighted annual average benzene concentration shall be determined using the procedures in paragraphs (c)(2) or (3) of this section.

(3) The benzene quantity in a waste stream that is generated less than one time per year, including process unit turnaround waste, shall be included in the determination of benzene quantity as determined in paragraph (k)(6) of this section for the year in which the waste is generated. The benzene quantity in this waste stream shall not be annualized or averaged over the time interval between the activities that resulted in generation of the waste for purposes of determining benzene quantity as determined in paragraph (k)(6) of this section.

(4) The benzene in waste entering an enhanced biodegradation unit, as defined in § 61.348(b)(2)(ii)(B), shall not be included in the determination of benzene quantity, determined in paragraph (k)(6) of this section, if the following conditions are met:

(i) The benzene concentration for each waste stream entering the enhanced biodegradation unit is less than 10 ppmw on a flow-weighted annual average basis, and

(ii) All prior waste management units managing the waste comply with §§ 61.343, 61.344, 61.345, 61.346, 61.347 and 61.348(a).

(5) The benzene quantity for each waste stream in paragraph (k)(2) of this section shall be determined by multiplying the annual waste quantity of each waste stream times its flow-weighted annual average benzene concentration.

(6) The total benzene quantity for the purposes of the calculation required by § 61.342(e)(2) shall be determined by adding together the benzene quantities determined in paragraphs (k)(1) and (k)(5) of this section for each applicable waste stream.

(7) If the benzene quantity determined in paragraph (6) of this section exceeds 6.0 Mg/yr (6.6 ton/yr) only because of multiple counting of the benzene quantity for a waste stream, the owner or operator may use the following procedures for the purposes of the calculation required by § 61.342(e)(2):

(i) Determine which waste management units are involved in the multiple counting of benzene;

(ii) Determine the quantity of benzene that is emitted, recovered, or removed from the affected units identified in paragraph (k)(7)(i) of this section, or destroyed in the units if applicable, using either direct measurements or the best available estimation techniques developed or approved by the Administrator.

(iii) Adjust the benzene quantity to eliminate the multiple counting of benzene based on the results from paragraph (k)(7)(ii) of this section and determine the total benzene quantity for the purposes of the calculation required by § 61.342(e)(2).

(iv) Submit in the annual report required under § 61.357(a) a description of the methods used and the resulting calculations for the alternative procedure under paragraph (k)(7) of this section, the benzene quantity determination from paragraph (k)(6) of this section, and the adjusted benzene quantity determination from paragraph (k)(7)(iii) of this section.

[55 FR 8346, Mar. 7, 1990; 55 FR 12444, Apr. 3, 1990, as amended at 55 FR 37231, Sept. 10, 1990; 58 FR 3099, Jan. 7, 1993; 65 FR 62160, Oct. 17, 2000]

§ 61.356 Recordkeeping requirements.

(a) Each owner or operator of a facility subject to the provisions of this subpart shall comply with the recordkeeping requirements of this section. Each record shall be maintained in a readily accessible location at the facility site for a period not less than two years from the date the information is recorded unless otherwise specified.

(b) Each owner or operator shall maintain records that identify each waste stream at the facility subject to this subpart, and indicate whether or not the waste stream is controlled for benzene emissions in accordance with this subpart. In addition the owner or operator shall maintain the following records:

(1) For each waste stream not controlled for benzene emissions in accordance with this subpart, the records shall include all test results, measurements, calculations, and other documentation used to determine the following information for the waste stream: waste stream identification, water content, whether or not the waste stream is a process wastewater stream, annual waste quantity, range of benzene concentrations, annual average flow-weighted benzene concentration, and annual benzene quantity.

(2) For each waste stream exempt from § 61.342(c)(1) in accordance with § 61.342(c)(3), the records shall include:

(i) All measurements, calculations, and other documentation used to determine that the continuous flow of process wastewater is less than 0.02 liters (0.005 gallons) per minute or the annual waste quantity of process wastewater is less than 10 Mg/yr (11 ton/yr) in accordance with § 61.342(c)(3)(i), or

(ii) All measurements, calculations, and other documentation used to determine that the sum of the total annual benzene quantity in all exempt waste streams does not exceed 2.0 Mg/yr (2.2 ton/yr) in accordance with § 61.342(c)(3)(ii).

(3) For each facility where process wastewater streams are controlled for benzene emissions in accordance with § 61.342(d) of this subpart, the records shall include for each treated process wastewater stream all measurements, calculations, and other documentation used to determine the annual benzene quantity in the process wastewater stream exiting the treatment process.

(4) For each facility where waste streams are controlled for benzene emissions in accordance with § 61.342(e), the records shall include for each waste stream all measurements, including the locations of the measurements, calculations, and other documentation used to determine that the total benzene quantity does not exceed 6.0 Mg/yr (6.6 ton/yr).

(5) For each facility where the annual waste quantity for process unit turnaround waste is determined in accordance with § 61.355(b)(5), the records shall include all test results, measurements, calculations, and other documentation used to determine the following information: identification of each process unit at the facility that undergoes turnarounds, the date of the most recent turnaround for each process unit, identification of each process unit turnaround waste, the water content of each process unit turnaround waste, the annual waste quantity determined in accordance with § 61.355(b)(5), the range of benzene concentrations in the waste, the annual average flow-weighted

benzene concentration of the waste, and the annual benzene quantity calculated in accordance with § 61.355(a)(1)(iii) of this section.

(6) For each facility where wastewater streams are controlled for benzene emissions in accordance with § 61.348(b)(2), the records shall include all measurements, calculations, and other documentation used to determine the annual benzene content of the waste streams and the total annual benzene quantity contained in all waste streams managed or treated in exempt waste management units.

(c) An owner or operator transferring waste off-site to another facility for treatment in accordance with § 61.342(f) shall maintain documentation for each offsite waste shipment that includes the following information: Date waste is shipped offsite, quantity of waste shipped offsite, name and address of the facility receiving the waste, and a copy of the notice sent with the waste shipment.

(d) An owner or operator using control equipment in accordance with §§ 61.343 through 61.347 shall maintain engineering design documentation for all control equipment that is installed on the waste management unit. The documentation shall be retained for the life of the control equipment. If a control device is used, then the owner or operator shall maintain the control device records required by paragraph (f) of this section.

(e) An owner or operator using a treatment process or wastewater treatment system unit in accordance with § 61.348 of this subpart shall maintain the following records. The documentation shall be retained for the life of the unit.

(1) A statement signed and dated by the owner or operator certifying that the unit is designed to operate at the documented performance level when the waste stream entering the unit is at the highest waste stream flow rate and benzene content expected to occur.

(2) If engineering calculations are used to determine treatment process or wastewater treatment system unit performance, then the owner or operator shall maintain the complete design analysis for the unit. The design analysis shall include for example the following information: Design specifications, drawings, schematics, piping and instrumentation diagrams, and other documentation necessary to demonstrate the unit performance.

(3) If performance tests are used to determine treatment process or wastewater treatment system unit performance, then the owner or operator shall maintain all test information necessary to demonstrate the unit performance.

(i) A description of the unit including the following information: type of treatment process; manufacturer name and model number; and for each waste stream entering and exiting the unit, the waste stream type (e.g., process wastewater, sludge, slurry, etc.), and the design flow rate and benzene content.

(ii) Documentation describing the test protocol and the means by which sampling variability and analytical variability were accounted for in the determination of the unit performance. The description of the test protocol shall include the following information: sampling locations, sampling method, sampling frequency, and analytical procedures used for sample analysis.

(iii) Records of unit operating conditions during each test run including all key process parameters.

(iv) All test results.

(4) If a control device is used, then the owner or operator shall maintain the control device records required by paragraph (f) of this section.

(f) An owner or operator using a closed-vent system and control device in accordance with § 61.349 of this subpart shall maintain the following records. The documentation shall be retained for the life of the control device.

(1) A statement signed and dated by the owner or operator certifying that the closed-vent system and control device is designed to operate at the documented performance level when the waste management unit vented to the control device is or would be operating at the highest load or capacity expected to occur.

(2) If engineering calculations are used to determine control device performance in accordance with § 61.349(c), then a design analysis for the control device that includes for example:

(i) Specifications, drawings, schematics, and piping and instrumentation diagrams prepared by the owner or operator, or the control device manufacturer or vendor that describe the control device design based on acceptable engineering texts. The design analysis shall address the following vent stream characteristics and control device operating parameters:

(A) For a thermal vapor incinerator, the design analysis shall consider the vent stream composition, constituent concentrations, and flow rate. The design analysis shall also establish the design minimum and average temperature in the combustion zone and the combustion zone residence time.

(B) For a catalytic vapor incinerator, the design analysis shall consider the vent stream composition, constituent concentrations, and flow rate. The design analysis shall also establish the design minimum and average temperatures across the catalyst bed inlet and outlet.

(C) For a boiler or process heater, the design analysis shall consider the vent stream composition, constituent concentrations, and flow rate. The design analysis shall also establish the design minimum and average flame zone temperatures, combustion zone residence time, and description of method and location where the vent stream is introduced into the flame zone.

(D) For a flare, the design analysis shall consider the vent stream composition, constituent concentrations, and flow rate. The design analysis shall also consider the requirements specified in 40 CFR 60.18.

(E) For a condenser, the design analysis shall consider the vent stream composition, constituent concentration, flow rate, relative humidity, and temperature. The design analysis shall also establish the design outlet organic compound concentration level or the design outlet benzene concentration level, design average temperature of the condenser exhaust vent stream, and the design average temperatures of the coolant fluid at the condenser inlet and outlet.

(F) For a carbon adsorption system that regenerates the carbon bed directly on-site in the control device such as a fixed-bed adsorber, the design analysis shall consider the vent stream composition, constituent concentration, flow rate, relative humidity, and temperature. The design analysis shall also establish the design exhaust vent stream organic compound concentration level or the design exhaust vent stream benzene concentration level, number and capacity of carbon beds, type and working capacity of activated carbon used for carbon beds, design total steam flow over the period of each complete carbon bed regeneration cycle, duration of the carbon bed steaming and cooling/drying cycles, design carbon bed temperature after regeneration, design carbon bed regeneration time, and design service life of carbon.

(G) For a carbon adsorption system that does not regenerate the carbon bed directly on-site in the control device, such as a carbon canister, the design analysis shall consider the vent stream composition, constituent concentration, flow rate, relative humidity, and temperature. The design analysis shall also establish the design exhaust vent stream organic compound concentration level or the design exhaust vent stream benzene concentration level, capacity of carbon bed, type and working capacity of activated carbon used for carbon bed, and design carbon replacement interval based on the total carbon working capacity of the control device and source operating schedule.

(H) For a control device subject to the requirements of § 61.349(a)(2)(iv), the design analysis shall consider the vent stream composition, constituent concentration, and flow rate. The design analysis shall also include all of the information submitted under § 61.349 (a)(2)(iv).

(ii) [Reserved]

(3) If performance tests are used to determine control device performance in accordance with § 61.349(c) of this subpart:

(i) A description of how it is determined that the test is conducted when the waste management unit or treatment process is operating at the highest load or capacity level. This description shall include the estimated or design flow rate and organic content of each vent stream and definition of the acceptable operating ranges of key process and control parameters during the test program.

(ii) A description of the control device including the type of control device, control device manufacturer's name and model number, control device dimensions, capacity, and construction materials.

(iii) A detailed description of sampling and monitoring procedures, including sampling and monitoring locations in the system, the equipment to be used, sampling and monitoring frequency, and planned analytical procedures for sample analysis.

(iv) All test results.

(g) An owner or operator shall maintain a record for each visual inspection required by §§ 61.343 through 61.347 of this subpart that identifies a problem (such as a broken seal, gap or other problem) which could result in benzene emissions. The record shall include the date of the inspection, waste management unit and control equipment location where the problem is identified, a description of the problem, a description of the corrective action taken, and the date the corrective action was completed.

(h) An owner or operator shall maintain a record for each test of no detectable emissions required by §§ 61.343 through 61.347 and § 61.349 of this subpart. The record shall include the following information: date the test is performed, background level measured during test, and maximum concentration indicated by the instrument reading measured for each potential leak interface. If detectable emissions are measured at a leak interface, then the record shall also include the waste management unit, control equipment, and leak interface location where detectable emissions were measured, a description of the problem, a description of the corrective action taken, and the date the corrective action was completed.

(i) For each treatment process and wastewater treatment system unit operated to comply with § 61.348, the owner or operator shall maintain documentation that includes the following information regarding the unit operation:

(1) Dates of startup and shutdown of the unit.

(2) If measurements of waste stream benzene concentration are performed in accordance with § 61.354(a)(1) of this subpart, the owner or operator shall maintain records that include date each test is performed and all test results.

(3) If a process parameter is continuously monitored in accordance with § 61.354(a)(2) of this subpart, the owner or operator shall maintain records that include a description of the operating parameter (or parameters) to be monitored to ensure that the unit will be operated in conformance with these standards and the unit's design specifications, and an explanation of the criteria used for selection of that parameter (or parameters). This documentation shall be kept for the life of the unit.

(4) If measurements of waste stream benzene concentration are performed in accordance with § 61.354(b), the owner or operator shall maintain records that include the date each test is performed and all test results.

(5) Periods when the unit is not operated as designed.

(j) For each control device, the owner or operator shall maintain documentation that includes the following information regarding the control device operation:

(1) Dates of startup and shutdown of the closed-vent system and control device.

(2) A description of the operating parameter (or parameters) to be monitored to ensure that the control device will be operated in conformance with these standards and the control device's design specifications and an explanation of the criteria used for selection of that parameter (or parameters). This documentation shall be kept for the life of the control device.

(3) Periods when the closed-vent system and control device are not operated as designed including all periods and the duration when:

(i) Any valve car-seal or closure mechanism required under § 61.349(a)(1)(ii) is broken or the by-pass line valve position has changed.

(ii) The flow monitoring devices required under § 61.349(a)(1)(ii) indicate that vapors are not routed to the control device as required.

(4) If a thermal vapor incinerator is used, then the owner or operator shall maintain continuous records of the temperature of the gas stream in the combustion zone of the incinerator and records of all 3-hour periods of operation during which the average temperature of the gas stream in the combustion zone is more than 28 °C (50 °F) below the design combustion zone temperature.

(5) If a catalytic vapor incinerator is used, then the owner or operator shall maintain continuous records of the temperature of the gas stream both upstream and downstream of the catalyst bed of the incinerator, records of all 3-hour periods of operation during which the average temperature measured before the catalyst bed is more than 28 °C (50 °F) below the design gas stream temperature, and records of all 3-hour periods of operation during which the average temperature difference across the catalyst bed is less than 80 percent of the design temperature difference.

(6) If a boiler or process heater is used, then the owner or operator shall maintain records of each occurrence when there is a change in the location at which the vent stream is introduced into the flame zone as required by § 61.349(a)(2)(i)(C). For a boiler or process heater having a design heat input capacity less than 44 MW (150 × 106 BTU/hr), the owner or operator shall maintain continuous records of the temperature of the gas stream in the combustion zone of the boiler or process heater and records of all 3-hour periods of operation during which the average temperature of the gas stream in the combustion zone is more than 28 °C (50 °F) below the design combustion zone temperature. For a boiler or process heater having a design heat input capacity greater than or equal to 44 MW (150 × 106 BTU/hr), the owner or operator shall maintain continuous records of the parameter(s) monitored in accordance with the requirements of § 61.354(c)(5).

(7) If a flare is used, then the owner or operator shall maintain continuous records of the flare pilot flame monitoring and records of all periods during which the pilot flame is absent.

(8) If a condenser is used, then the owner or operator shall maintain records from the monitoring device of the parameters selected to be monitored in accordance with § 61.354(c)(6). If concentration of organics or concentration of benzene in the control device outlet gas stream is monitored, then the owner or operator shall record all 3-hour periods of operation during which the concentration of organics or the concentration of benzene in the exhaust stream is more than 20 percent greater than the design value. If the temperature of the condenser exhaust stream and coolant fluid is monitored, then the owner or operator shall record all 3-hour periods of operation during which the temperature of the condenser exhaust vent stream is more than 6 °C (11 °F) above the design average exhaust vent stream temperature, or the temperature of the coolant fluid exiting the condenser is more than 6 °C (11 °F) above the design average coolant fluid temperature at the condenser outlet.

(9) If a carbon adsorber is used, then the owner or operator shall maintain records from the monitoring device of the concentration of organics or the concentration of benzene in the control device outlet gas stream. If the concentration of organics or the concentration of benzene in the control device outlet gas stream is monitored, then the owner or operator shall record all 3-hour periods of operation during which the concentration of organics or the concentration of benzene in the exhaust stream is more than 20 percent greater than the design value. If the carbon bed regeneration interval is monitored, then the owner or operator shall record each occurrence when the vent stream continues to flow through the control device beyond the predetermined carbon bed regeneration time.

(10) If a carbon adsorber that is not regenerated directly on site in the control device is used, then the owner or operator shall maintain records of dates and times when the control device is monitored, when breakthrough is measured, and shall record the date and time then the existing carbon in the control device is replaced with fresh carbon.

(11) If an alternative operational or process parameter is monitored for a control device, as allowed in § 61.354(e) of this subpart, then the owner or operator shall maintain records of the continuously monitored parameter, including periods when the device is not operated as designed.

(12) If a control device subject to the requirements of § 61.349(a)(2)(iv) is used, then the owner or operator shall maintain records of the parameters that are monitored and each occurrence when the parameters monitored are outside the range of values specified in § 61.349(a)(2)(iv)(C), or other records as specified by the Administrator.

(k) An owner or operator who elects to install and operate the control equipment in § 61.351 of this subpart shall comply with the recordkeeping requirements in 40 CFR 60.115b.

(l) An owner or operator who elects to install and operate the control equipment in § 61.352 of this subpart shall maintain records of the following:

(1) The date, location, and corrective action for each visual inspection required by 40 CFR 60.693-2(a)(5), during which a broken seal, gap, or other problem is identified that could result in benzene emissions.

(2) Results of the seal gap measurements required by 40 CFR 60.693-2(a).

(m) If a system is used for emission control that is maintained at a pressure less than atmospheric pressure with openings to provide dilution air, then the owner or operator shall maintain records of the monitoring device and records of all periods during which the pressure in the unit is operated at a pressure that is equal to or greater than atmospheric pressure.

(n) Each owner or operator using a total enclosure to comply with control requirements for tanks in § 61.343 or the control requirements for containers in § 61.345 must keep the records required in paragraphs (n)(1) and (2) of this section. Owners or operators may use records as required in 40 CFR 264.1089(b)(2)(iv) or 40 CFR 265.1090(b)(2)(iv) for a tank or as required in 40 CFR 264.1089(d)(1) or 40 CFR 265.1090(d)(1) for a container to meet the recordkeeping requirement in paragraph (n)(1) of this section. The owner or operator must make the records of each verification of a total enclosure available for inspection upon request.

(1) Records of the most recent set of calculations and measurements performed to verify that the enclosure meets the criteria of a permanent total enclosure as specified in “Procedure T—Criteria for and Verification of a Permanent or Temporary Total Enclosure” in 40 CFR 52.741, appendix B;

(2) Records required for a closed-vent system and control device according to the requirements in paragraphs (d) (f), and (j) of this section.

[55 FR 8346, Mar. 7, 1990; 55 FR 12444, Apr. 3, 1990; 55 FR 18331, May 2, 1990, as amended at 58 FR 3103, Jan. 7, 1993; 65 FR 62161, Oct. 17, 2000; 67 FR 68533, Nov. 12, 2002]

§ 61.357 Reporting requirements.

(a) Each owner or operator of a chemical plant, petroleum refinery, coke by-product recovery plant, and any facility managing wastes from these industries shall submit to the Administrator within 90 days after January 7, 1993, or by the initial startup for a new source with an initial startup after the effective date, a report that summarizes the regulatory status of each waste stream subject to § 61.342 and is determined by the procedures specified in § 61.355(c) to contain benzene. Each owner or operator subject to this subpart who has no benzene onsite in wastes, products, by-products, or intermediates shall submit an initial report that is a statement to this effect. For all other owners or operators subject to this subpart, the report shall include the following information:

(1) Total annual benzene quantity from facility waste determined in accordance with § 61.355(a) of this subpart.

(2) A table identifying each waste stream and whether or not the waste stream will be controlled for benzene emissions in accordance with the requirements of this subpart.

(3) For each waste stream identified as not being controlled for benzene emissions in accordance with the requirements of this subpart the following information shall be added to the table:

(i) Whether or not the water content of the waste stream is greater than 10 percent;

(ii) Whether or not the waste stream is a process wastewater stream, product tank drawdown, or landfill leachate;

(iii) Annual waste quantity for the waste stream;

(iv) Range of benzene concentrations for the waste stream;

(v) Annual average flow-weighted benzene concentration for the waste stream; and

(vi) Annual benzene quantity for the waste stream.

(4) The information required in paragraphs (a) (1), (2), and (3) of this section should represent the waste stream characteristics based on current configuration and operating conditions. An owner or operator only needs to list in the report those waste streams that contact materials containing benzene. The report does not need to include a description of the controls to be installed to comply with the standard or other information required in § 61.10(a).

(b) If the total annual benzene quantity from facility waste is less than 1 Mg/yr (1.1 ton/yr), then the owner or operator shall submit to the Administrator a report that updates the information listed in paragraphs (a)(1) through (a)(3) of this section whenever there is a change in the process generating the waste stream that could cause the total annual benzene quantity from facility waste to increase to 1 Mg/yr (1.1 ton/yr) or more.

(c) If the total annual benzene quantity from facility waste is less than 10 Mg/yr (11 ton/yr) but is equal to or greater than 1 Mg/yr (1.1 ton/yr), then the owner or operator shall submit to the Administrator a report that updates the information listed in paragraphs (a)(1) through (a)(3) of this section. The report shall be submitted annually and whenever there is a change in the process generating the waste stream that could cause the total annual benzene quantity from facility waste to increase to 10 Mg/yr (11 ton/yr) or more. If the information in the annual report required by paragraphs (a)(1) through (a)(3) of this section is not changed in the following year, the owner or operator may submit a statement to that effect.

(d) If the total annual benzene quantity from facility waste is equal to or greater than 10 Mg/yr (11 ton/yr), then the owner or operator shall submit to the Administrator the following reports:

(1) Within 90 days after January 7, 1993, unless a waiver of compliance under § 61.11 of this part is granted, or by the date of initial startup for a new source with an initial startup after the effective date, a certification that the equipment necessary to comply with these standards has been installed and that the required initial inspections or tests have been carried out in accordance with this subpart. If a waiver of compliance is granted under § 61.11, the certification of equipment necessary to comply with these standards shall be submitted by the date the waiver of compliance expires.

(2) Beginning on the date that the equipment necessary to comply with these standards has been certified in accordance with paragraph (d)(1) of this section, the owner or operator shall submit annually to the Administrator a report that updates the information listed in paragraphs (a)(1) through (a)(3) of this section. If the information in the annual report required by paragraphs (a)(1) through (a)(3) of this section is not changed in the following year, the owner or operator may submit a statement to that effect.

(3) If an owner or operator elects to comply with the requirements of § 61.342(c)(3)(ii), then the report required by paragraph (d)(2) of this section shall include a table identifying each waste stream chosen for exemption and the total annual benzene quantity in these exempted streams.

(4) If an owner or operator elects to comply with the alternative requirements of § 61.342(d) of this subpart, then he shall include in the report required by paragraph (d)(2) of this section a table presenting the following information for each process wastewater stream:

(i) Whether or not the process wastewater stream is being controlled for benzene emissions in accordance with the requirements of this subpart;

(ii) For each process wastewater stream identified as not being controlled for benzene emissions in accordance with the requirements of this subpart, the table shall report the following information for the process wastewater stream as determined at the point of waste generation: annual waste quantity, range of benzene concentrations, annual average flow-weighted benzene concentration, and annual benzene quantity;

(iii) For each process wastewater stream identified as being controlled for benzene emissions in accordance with the requirements of this subpart, the table shall report the following information for the process wastewater stream as

determined at the exit to the treatment process: Annual waste quantity, range of benzene concentrations, annual average flow-weighted benzene concentration, and annual benzene quantity.

(5) If an owner or operator elects to comply with the alternative requirements of § 61.342(e), then the report required by paragraph (d)(2) of this section shall include a table presenting the following information for each waste stream:

(i) For each waste stream identified as not being controlled for benzene emissions in accordance with the requirements of this subpart; the table shall report the following information for the waste stream as determined at the point of waste generation: annual waste quantity, range of benzene concentrations, annual average flow-weighted benzene concentration, and annual benzene quantity;

(ii) For each waste stream identified as being controlled for benzene emissions in accordance with the requirements of this subpart; the table shall report the following information for the waste stream as determined at the applicable location described in § 61.355(k)(2): Annual waste quantity, range of benzene concentrations, annual average flow-weighted benzene concentration, and annual benzene quantity.

(6) Beginning 3 months after the date that the equipment necessary to comply with these standards has been certified in accordance with paragraph (d)(1) of this section, the owner or operator shall submit quarterly to the Administrator a certification that all of the required inspections have been carried out in accordance with the requirements of this subpart.

(7) Beginning 3 months after the date that the equipment necessary to comply with these standards has been certified in accordance with paragraph (d)(1) of this section, the owner or operator shall submit a report quarterly to the Administrator that includes:

(i) If a treatment process or wastewater treatment system unit is monitored in accordance with § 61.354(a)(1) of this subpart, then each period of operation during which the concentration of benzene in the monitored waste stream exiting the unit is equal to or greater than 10 ppmw.

(ii) If a treatment process or wastewater treatment system unit is monitored in accordance with § 61.354(a)(2) of this subpart, then each 3-hour period of operation during which the average value of the monitored parameter is outside the range of acceptable values or during which the unit is not operating as designed.

(iii) If a treatment process or wastewater treatment system unit is monitored in accordance with § 61.354(b), then each period of operation during which the flow-weighted annual average concentration of benzene in the monitored waste stream entering the unit is equal to or greater than 10 ppmw and/or the total annual benzene quantity is equal to or greater than 1.0 mg/yr.

(iv) For a control device monitored in accordance with § 61.354(c) of this subpart, each period of operation monitored during which any of the following conditions occur, as applicable to the control device:

(A) Each 3-hour period of operation during which the average temperature of the gas stream in the combustion zone of a thermal vapor incinerator, as measured by the temperature monitoring device, is more than 28 °C (50 °F) below the design combustion zone temperature.

(B) Each 3-hour period of operation during which the average temperature of the gas stream immediately before the catalyst bed of a catalytic vapor incinerator, as measured by the temperature monitoring device, is more than 28 °C (50 °F) below the design gas stream temperature, and any 3-hour period during which the average temperature difference across the catalyst bed (i.e., the difference between the temperatures of the gas stream immediately before and after the catalyst bed), as measured by the temperature monitoring device, is less than 80 percent of the design temperature difference.

(C) Each 3-hour period of operation during which the average temperature of the gas stream in the combustion zone of a boiler or process heater having a design heat input capacity less than 44 MW (150 × 106 BTU/hr), as mesured by the temperature monitoring device, is more than 28 °C (50 °F) below the design combustion zone temperature.

(D) Each 3-hour period of operation during which the average concentration of organics or the average concentration of benzene in the exhaust gases from a carbon adsorber, condenser, or other vapor recovery system is more than 20 percent greater than the design concentration level of organics or benzene in the exhaust gas.

(E) Each 3-hour period of operation during which the temperature of the condenser exhaust vent stream is more than 6 °C (11 °F) above the design average exhaust vent stream temperature, or the temperature of the coolant fluid exiting the condenser is more than 6 °C (11 °F) above the design average coolant fluid temperature at the condenser outlet.

(F) Each period in which the pilot flame of a flare is absent.

(G) Each occurrence when there is a change in the location at which the vent stream is introduced into the flame zone of a boiler or process heater as required by § 61.349(a)(2)(i)(C) of this subpart.

(H) Each occurrence when the carbon in a carbon adsorber system that is regenerated directly on site in the control device is not regenerated at the predetermined carbon bed regeneration time.

(I) Each occurrence when the carbon in a carbon adsorber system that is not regenerated directly on site in the control device is not replaced at the predetermined interval specified in § 61.354(c) of this subpart.

(J) Each 3-hour period of operation during which the parameters monitored are outside the range of values specified in § 61.349(a)(2)(iv)(C), or any other periods specified by the Administrator for a control device subject to the requirements of § 61.349(a)(2)(iv).

(v) For a cover and closed-vent system monitored in accordance with § 61.354(g), the owner or operator shall submit a report quarterly to the Administrator that identifies any period in which the pressure in the waste management unit is equal to or greater than atmospheric pressure.

(8) Beginning one year after the date that the equipment necessary to comply with these standards has been certified in accordance with paragraph (d)(1) of this section, the owner or operator shall submit annually to the Administrator a report that summarizes all inspections required by §§ 61.342 through 61.354 during which detectable emissions are measured or a problem (such as a broken seal, gap or other problem) that could result in benzone emissions is identified, including information about the repairs or corrective action taken.

(e) An owner or operator electing to comply with the provisions of §§ 61.351 or 61.352 of this subpart shall notify the Administrator of the alternative standard selected in the report required under § 61.07 or § 61.10 of this part.

(f) An owner or operator who elects to install and operate the control equipment in § 61.351 of this subpart shall comply with the reporting requirements in 40 CFR 60.115b.

(g) An owner or operator who elects to install and operate the control equipment in § 61.352 of this subpart shall submit initial and quarterly reports that identify all seal gap measurements, as required in 40 CFR 60.693-2(a), that are outside the prescribed limits.

[55 FR 8346, Mar. 7 1990; 55 FR 12444, Apr. 3, 1990, as amended at 55 FR 37231, Sept. 10, 1990; 58 FR 3105, Jan. 7, 1993; 65 FR 62161, Oct. 17, 2000]

§ 61.358 Delegation of authority.

(a) In delegating implementation and enforcement authority to a State under section 112(d) of the Clean Air Act, the authorities contained in paragraph (b) of this section shall be retained by the Administrator and not transferred to a State.

(b) Alternative means of emission limitation under § 61.353 of this subpart will not be delegated to States.

§ 61.359 [Reserved]

Appendix A to Part 61

APPENDIX A

National Emission Standards for Hazardous Air Pollutants

Compliance Status Information

I. SOURCE REPORT

INSTRUCTIONS: Owners or operators of sources of hazardous pollutants subject to the National Emission Standards for Hazardous Air Pollutants are required to submit the information contained in Section I to the appropriate U.S. Environmental Protection Agency Regional Office prior to 90 days after the effective date of any standards or amendments which require the submission of such information.

A list of regional offices is provided in §61.04.

A. SOURCE INFORMATION

1. Identification/Location - Indicate the name and address of each source.

1 2 Region | 3 4 State | 5 8 County | 9 13 Source Number | 0 0 0 14 16 | 0 0 17 18 | 1 19

20 22 AQCR # | 23 26 City Code | 27 Source Name 46

47 Street Address (Location of Plant) 66 | 80

Dup 1-18 19 | 20 City Name 34 | State 35 39

55 58 NEDS X Ref.

40 State Regis. Number 54

59 SIC 62 | FF 64 | 8 A/P 65 | 77 79 Staff | 80

Dup 1-18 5 19 | CS 30 | STP 31 | EC 49 | 80

2. Contact - Indicate the name and telephone number of the owner or operator or other responsible official whom EPA may contact concerning this report.

Dup 1-18 4 1 19 20 | 21 Name 43

44 46 Area Code | 47 Number 54 | - | 80

3. Source Description - Briefly state the nature of the source (e.g., "Chlor-alkali Plant" or "Machine Shop").

Dup 1-18 4 2 19 20 | 21 Description 50

51 Continued 79 | 80

4. Alternative Mailing Address - Indicate an alternative mailing address if correspondence is to be directed to a location different than that specified above.

Dup 1-18 4 3 19 20 | 21 Number Street or Box Number 45 | 80

Dup 1-18 4 4 19 20 | 21 City 35 | 37 38 State | 41 Zip 44 | 80

5. Compliance Status - The emissions from this source ___ can ___ cannot meet the emission limitations contained in the National Emission Standards on or prior to 90 days after the effective date of any standards or amendments which require the submission of such information.

Signature of Owner, Operator or Other Responsible Official

NOTE: If the emissions from the source will exceed those limits set by the National Emission Standards for Hazardous Air Pollutants, the source will be in violation and subject to Federal enforcement actions unless granted a waiver of compliance by the Administrator of the U.S. Environmental Protection Agency. The information needed for such waivers is listed in Section II of this form.

B. PROCESS INFORMATION. Part B should be completed separately for each point of emission for each hazardous pollutant. [Sources subject to 61.22(1) may omit number 4. below.]

Dup 1-13 14 16 | 0 0 17 18 | 5 19 | 20 SCC 27 | 28 29 NEDS X Ref | 30 LS | 31 SIP

1. Pollutant Emitted - Indicate the type of hazardous pollutant emitted by the process. Indicate "AS" for asbestos, "BE" for beryllium, or "HG" for mercury.

32 33 Pollutant | 34 Regulation 48 | 49 EC

2. Process Description - Provide a brief description of each process (e.g., "hydrogen end box" in a mercury chlor-alkali plant, "grinding machine" in a beryllium machine shop). Use additional sheets if necessary.

50 Process Description 74 | 80

Dup 1-18 6 1 19 20 21 50

51 79 80

Dup 1-18 6 2 19 20 21 50

51 79 80

3. Amount of Pollutant - Indicate the average weight of the hazardous material named in Item 1 which enters the process in pounds per month (based on the previous twelve months of operation).

Dup 1-18 6 3 19 20 | 21 27 | lbs./mo. 29 36 | 80

4. Control Devices
a. Indicate the type of pollution control devices, if any, used to reduce the emissions from the process (e.g., venturi scrubber, baghouse, wet cyclone) and the estimated percent of the pollutant which the device removes from the process gas stream.

Dup 1-18 6 4 19 20 | PRIMARY CONTROL DEVICE: 21 43

45 Primary Device Name 64 | 66 70 Percent Removal Efficiency | 72 79

80

Dup 1-18 6 5 19 20 | SECONDARY CONTROL DEVICES: 21 45

47 Secondary Device Name 64 | 66 70 Percent Removal Efficiency | % EFFIC. 72 79 | 80

b. Asbestos Emission Control Devices Only
i. If a baghouse is specified in Item 4a, give the following information:

- The air flow permeability in cubic feet per minute per square foot of fabric area.

  Air flow permeability = _____ cfm/ft^2

- The pressure drop in inches water gauge across the filter at which the baghouse is operated.

  Operating pressure drop = _____ inches w.g.

- If the baghouse material contains synthetic fill yarn, check whether this material is / / spun / / or not spun.

- If the baghouse utilizes a felted fabric, give the minimum thickness in inches and the density in ounces per square yard.

  Thickness = _____ inches Density = _____ oz/yd^2

ii. If a wet collection device is specified in Item 4a, give the designed unit contacting energy in inches water gauge.

- Unit contacting energy = _____ inches w.g.

C. DISPOSAL OF ASBESTOS-CONTAINING WASTES. Part C should be completed separately for each asbestos-containing waste generation operation arising from sources subject to §61.22(a), (c), (e), and (h).

Dup 1-13 14 16 | 0 0 17 18 | 5 19 | 20 SCC 27 | 28 29 NEDS X Ref | 30 CS | 31 SIP

A B 32 33 Pollutant | 34 Regulation 48 | 49 EC

1. Waste Generation - Provide a brief description of each process that generates asbestos-containing waste (e.g. disposal of control device wastes).

50 Process Description 79 80

2. Asbestos Concentration - Indicate the average percentage asbestos content of these materials.

Dup 1-18 6 1 19 20 21 ASBESTOS CONCENTRATION: 43 45 48

% 50 80

3. Amount of Wastes - Indicate the average weight of asbestos-containing wastes disposed of, measured in kg/day.

Dup 1-18 6 2 19 20 21 27 29 kg/day 34 80

4. Control Methods - Indicate the emission control methods used in all stages of waste disposal, from collection, processing, and packaging to transporting and deposition.

Dup 1-18 6 3 19 20 21 Primary Control Method 43

45 79 80

Dup 1-18 6 4 19 20 21 50

51 79 80

5. Waste Disposal - Indicate the type of disposal site (sanitary landfill, open, covered) or incineration site (municipal, private) where the waste is disposed of and who operates the site (company, private, municipal). State the name and location of the site (closest city or town, county, state).

Dup 1-18 6 5 19 20 21 TYPE OF SITE: 33 35 50

51 79 80

Dup 1-18 6 6 19 20 21 OPERATOR: 29 31 50

51 79 80

Dup 1-18 6 7 19 20 21 LOCATION: 29

31 70

71 79 80

D. WASTE DISPOSAL SITES. Part D should be completed separately for each asbestos waste disposal site subject to section 61.22(1).

Dup 1-13 14 16 0 0 17 18 5 19 20 SCC 27 28 29 30 31
NEDS X Ref CS SIP

A B 32 33 Pollutant 34 Regulation 48 49 EC

50 WASTE DISPOSAL SITE 68 80

1. Description - Provide a brief description of the site, including its size and configuration, and the distance to the closest city or town, closest residence, and closest primary road.

Dup 1-18 6 1 19 20 21 SITE DESCRIPTION 37 39 50

51 79 80

Dup 1-18 6 2 19 20 21 DISTANCE: 29 30 TOWN: 34 36 40 42 K M 43

45 RESIDENCE: 54 56 60 62 K M 63 65 ROAD: 69 71 75

77 K M 78 80

2. Inactivation - After the site is inactivated, indicate the method or methods used to comply with the standard and send a list of the actions that will be undertaken to maintain the inactivated site.

Dup 1-18 6 8 COMPLIANCE METHOD/INACTIVE SITE:
19 20 21 52

54 79 80

II. Waiver Requests

A. *Waiver of Compliance.* Owners or operators of sources unable to operate in compliance with the National Emission Standards for Hazardous Air Pollutants prior to 90 days after the effective date of any standards or amendments which require the submission of such information may request a waiver of compliance from the Administrator of the U.S. Environmental Protection Agency for the time period necessary to install appropriate control devices or make modifications to achieve compliance. The Administrator may grant a waiver of compliance with the standard for a period not exceeding two years from the effective date of the hazardous pollutant standards, if he finds that such period is necessary for the installation of controls and that steps will be taken during the period of the waiver to assure that the health of persons will be protected from imminent endangerment.

The report information provided in Section I must accompany this application. Applications should be sent to the appropriate EPA regional office.

1. *Processes Involved* —Indicate the process or processes emitting hazardous pollutants to which emission controls are to be applied.

2. *Controls*

a. Describe the proposed type of control device to be added or modification to be made to the process to reduce the emission of hazardous pollutants to an acceptable level. (Use additional sheets if necessary.)

b. Describe the measures that will be taken during the waiver period to assure that the health of persons will be protected from imminent endangerment. (Use additional sheets if necessary.)

3. *Increments of Progress* —Specify the dates by which the following increments of progress will be met.

Date by which contracts for emission control systems or process modifications will be awarded; or date by which orders will be issued for the purchase of the component parts to accomplish emission control or process modification.

Dup 1-16 0 1 7
17 19 53 54 55 60 61 MO/DY/YR 66 80

Date of initiation of on-site construction or installation of emission control equipment or process change.

Dup 1-16 0 2 7
17 19 53 54 55 60 61 MO/DY/YR 66 80

Date by which on-site construction or installation of emission control equipment or process modification is to be completed.

Dup 1-16 0 3 7
17 19 53 54 55 60 61 MO/DY/YR 66 80

Date by which final compliance is to be achieved.

Dup 1-16 0 4 7
17 19 53 54 55 60 61 MO/DY/YR 66 80

B. *Waiver of Emission Tests.* A waiver of emission testing may be granted to owners or operators of sources subject to emission testing if, in the judgment of the Administrator of the Environmental Protection Agency the emissions from the source comply with the appropriate standard or if the owners or operators of the source have requested a waiver of compliance or have been granted a waiver of compliance.

This application should accompany the report information provided in Section I.

1. *Reason* —State the reasons for requesting a waiver of emission testing. If the reason stated is that the emissions from the source are within the prescribed limits, documentation of this condition must be attached.

Date

Signature of the owner or operator

(Sec. 114, of the Clean Air Act as amended (42 U.S.C. 7414))

[40 FR 48303, Oct. 14, 1975, as amended at 43 FR 8800, Mar. 3, 1978; 50 FR 46295, Sept. 9, 1985]

Appendix B to Part 61—Test Methods

Method 101—Determination of particulate and gaseous mercury emissions from chlor-alkali plants (air streams)

Method 101A—Determination of particulate and gaseous mercury emissions from sewage sludge incinerators

Method 102—Determination of particulate and gaseous mercury emissions from chlor-alkali plants (hydrogen streams)

Method 103—Beryllium screening method

Method 104—Determination of beryllium emissions from stationary sources

Method 105—Determination of mercury in wastewater treatment plant sewage sludges

Method 106—Determination of vinyl chloride emissions from stationary sources

Method 107—Determination of vinyl chloride content of in-process wastewater samples, and vinyl chloride content of polyvinyl chloride resin slurry, wet cake, and latex samples

Method 107A—Determination of vinyl chloride content of solvents, resin-solvent solution, polyvinyl chloride resin, resin slurry, wet resin, and latex samples

Method 108—Determination of particulate and gaseous arsenic emissions

Method 108A—Determination of arsenic content in ore samples from nonferrous smelters

Method 108B—Determination of arsenic content in ore samples from nonferrous smelters

Method 108C—Determination of arsenic content in ore samples from nonferrous smelters (molybdenum blue photometric procedure)

Method 111—Determination of Polonium—210 emissions from stationary sources

Method 101—Determination of Particulate and Gaseous Mercury Emissions From Chlor-Alkali Plants (Air Streams)

NOTE: This method does not include all of the specifications (*e.g.,* equipment and supplies) and procedures (*e.g.,* sampling and analytical) essential to its performance. Some material is incorporated by reference from methods in appendix A to 40 CFR part 60. Therefore, to obtain reliable results, persons using this method should have a thorough knowledge of at least the following additional test methods: Method 1, Method 2, Method 3, and Method 5.

1.0 Scope and Application

1.1 Analytes.

Analyte	CAS No.	Sensitivity
Mercury (Hg)	7439-97-6	Dependent upon recorder and spectrophotometer.

1.2 Applicability. This method is applicable for the determination of Hg emissions, including both particulate and gaseous Hg, from chlor-alkali plants and other sources (as specified in the regulations) where the carrier-gas stream in the duct or stack is principally air.

1.3 Data Quality Objectives. Adherence to the requirements of this method will enhance the quality of the data obtained from air pollutant sampling methods.

2.0 Summary of Method

Particulate and gaseous Hg emissions are withdrawn isokinetically from the source and collected in acidic iodine monochloride (ICl) solution. The Hg collected (in the mercuric form) is reduced to elemental Hg, which is then aerated from the solution into an optical cell and measured by atomic absorption spectrophotometry.

3.0 Definitions [Reserved]

4.0 Interferences

4.1 Sample Collection. Sulfur dioxide (SO_2) reduces ICl and causes premature depletion of the ICl solution.

4.2 Sample Analysis.

4.2.1 ICl concentrations greater than 10^{-4} molar inhibit the reduction of the Hg (II) ion in the aeration cell.

4.2.2 Condensation of water vapor on the optical cell windows causes a positive interference.

5.0 Safety

5.1 Disclaimer. This method may involve hazardous materials, operations, and equipment. This test method does not purport to address all of the safety problems associated with its use. It is the responsibility of the user of this test method to establish appropriate safety and health practices and determine the applicability of regulatory limitations prior to performing this test method.

5.2 Corrosive Reagents. The following reagents are hazardous. Personal protective equipment and safe procedures are useful in preventing chemical splashes. If contact occurs, immediately flush with copious amounts of water for at least 15 minutes. Remove clothing under shower and decontaminate. Treat residual chemical burn as thermal burn.

5.2.1 Hydrochloric Acid (HCl). Highly toxic and corrosive. Causes severe damage to tissues. Vapors are highly irritating to eyes, skin, nose, and lungs, causing severe damage. May cause bronchitis, pneumonia, or edema of lungs. Exposure to concentrations of 0.13 to 0.2 percent can be lethal to humans in a few minutes. Provide ventilation to limit exposure. Reacts with metals, producing hydrogen gas.

5.2.2 Nitric Acid (HNO_3). Highly corrosive to eyes, skin, nose, and lungs. Vapors cause bronchitis, pneumonia, or edema of lungs. Reaction to inhalation may be delayed as long as 30 hours and still be fatal. Provide ventilation to limit exposure. Strong oxidizer. Hazardous reaction may occur with organic materials such as solvents.

5.2.3 Sulfuric Acid ($H_2 SO_4$). Rapidly destructive to body tissue. Will cause third degree burns. Eye damage may result in blindness. Inhalation may be fatal from spasm of the larynx, usually within 30 minutes. 3 mg/m^3 will cause lung damage. 1 mg/m^3 for 8 hours will cause lung damage or, in higher concentrations, death. Provide ventilation to limit inhalation. Reacts violently with metals and organics.

6.0 Equipment and Supplies.

6.1 Sample Collection. A schematic of the sampling train used in performing this method is shown in Figure 101-1; it is similar to the Method 5 sampling train. The following items are required for sample collection:

6.1.1 Probe Nozzle, Pitot Tube, Differential Pressure Gauge, Metering System, Barometer, and Gas Density Determination Equipment. Same as Method 5, Sections 6.1.1.1, 6.1.1.3, 6.1.1.4, 6.1.1.9, 6.1.2, and 6.1.3, respectively.

6.1.2 Probe Liner. Borosilicate or quartz glass tubing. A heating system capable of maintaining a gas temperature of 120 ±14 °C (248 ±25 °F) at the probe exit during sampling may be used to prevent water condensation.

NOTE: Do not use metal probe liners.

6.1.3 Impingers. Four Greenburg-Smith impingers connected in series with leak-free ground glass fittings or any similar leak-free noncontaminating fittings. For the first, third, and fourth impingers, impingers that are modified by replacing the tip with a 13-mm ID (0.5-in.) glass tube extending to 13 mm (0.5 in.) from the bottom of the flask may be used.

6.1.4 Acid Trap. Mine Safety Appliances air line filter, Catalog number 81857, with acid absorbing cartridge and suitable connections, or equivalent.

6.2 Sample Recovery. The following items are needed for sample recovery:

6.2.1 Glass Sample Bottles. Leakless, with Teflon-lined caps, 1000- and 100-ml.

6.2.2 Graduated Cylinder. 250-ml.

6.2.3 Funnel and Rubber Policeman. To aid in transfer of silica gel to container; not necessary if silica gel is weighed in the field.

6.2.4 Funnel. Glass, to aid in sample recovery.

6.3 Sample Preparation and Analysis. The following items are needed for sample preparation and analysis:

6.3.1 Atomic Absorption Spectrophotometer. Perkin-Elmer 303, or equivalent, containing a hollow-cathode mercury lamp and the optical cell described in Section 6.3.2.

6.3.2 Optical Cell. Cylindrical shape with quartz end windows and having the dimensions shown in Figure 101-2. Wind the cell with approximately 2 meters (6 ft) of 24-gauge Nichrome wire, or equivalent, and wrap with fiberglass insulation tape, or equivalent; do not let the wires touch each other.

6.3.3 Aeration Cell. Constructed according to the specifications in Figure 101-3. Do not use a glass frit as a substitute for the blown glass bubbler tip shown in Figure 101-3.

6.3.4 Recorder. Matched to output of the spectrophotometer described in Section 6.3.1.

6.3.5 Variable Transformer. To vary the voltage on the optical cell from 0 to 40 volts.

6.3.6 Hood. For venting optical cell exhaust.

6.3.7 Flow Metering Valve.

6.3.8 Rate Meter. Rotameter, or equivalent, capable of measuring to within 2 percent a gas flow of 1.5 liters/min (0.053 cfm).

6.3.9 Aeration Gas Cylinder. Nitrogen or dry, Hg-free air, equipped with a single-stage regulator.

6.3.10 Tubing. For making connections. Use glass tubing (ungreased ball and socket connections are recommended) for all tubing connections between the solution cell and the optical cell; do not use Tygon tubing, other types of flexible tubing, or metal tubing as substitutes. Teflon, steel, or copper tubing may be used between the nitrogen tank and flow metering valve (Section 6.3.7), and Tygon, gum, or rubber tubing between the flow metering valve and the aeration cell.

6.3.11 Flow Rate Calibration Equipment. Bubble flow meter or wet-test meter for measuring a gas flow rate of 1.5 ±0.1 liters/min (0.053 ±0.0035 cfm).

6.3.12 Volumetric Flasks. Class A with penny head standard taper stoppers; 100-, 250-, 500-, and 1000-ml.

6.3.13 Volumetric Pipets. Class A; 1-, 2-, 3-, 4-, and 5-ml.

6.3.14 Graduated Cylinder. 50-ml.

6.3.15 Magnetic Stirrer. General-purpose laboratory type.

6.3.16 Magnetic Stirring Bar. Teflon-coated.

6.3.17 Balance. Capable of weighing to ±0.5 g.

6.3.18 Alternative Analytical Apparatus. Alternative systems are allowable as long as they meet the following criteria:

6.3.18.1 A linear calibration curve is generated and two consecutive samples of the same aliquot size and concentration agree within 3 percent of their average.

6.3.18.2 A minimum of 95 percent of the spike is recovered when an aliquot of a source sample is spiked with a known concentration of Hg (II) compound.

6.3.18.3 The reducing agent should be added after the aeration cell is closed.

6.3.18.4 The aeration bottle bubbler should not contain a frit.

6.3.18.5 Any Tygon tubing used should be as short as possible and conditioned prior to use until blanks and standards yield linear and reproducible results.

6.3.18.6 If manual stirring is done before aeration, it should be done with the aeration cell closed.

6.3.18.7 A drying tube should not be used unless it is conditioned as the Tygon tubing above.

7.0 Reagents and Standards

Unless otherwise indicated, all reagents must conform to the specifications established by the Committee on Analytical Reagents of the American Chemical Society; where such specifications are not available, use the best available grade.

7.1 Sample Collection. The following reagents are required for sample collection:

7.1.1 Water. Deionized distilled, to conform to ASTM D 1193-77 or 91 (incorporated by reference—see § 61.18), Type 1. If high concentrations of organic matter are not expected to be present, the analyst may eliminate the $KMnO_4$ test for oxidizable organic matter. Use this water in all dilutions and solution preparations.

7.1.2 Nitric Acid, 50 Percent (v/v). Mix equal volumes of concentrated HNO_3 and water, being careful to add the acid to the water slowly.

7.1.3 Silica Gel. Indicating type, 6- to 16-mesh. If previously used, dry at 175 °C (350 °F) for 2 hours. The tester may use new silica gel as received.

7.1.4 Potassium Iodide (KI) Solution, 25 Percent. Dissolve 250 g of KI in water, and dilute to 1 liter.

7.1.5 Iodine Monochloride Stock Solution, 1.0 M. To 800 ml of 25 percent KI solution, add 800 ml of concentrated HCl. Cool to room temperature. With vigorous stirring, slowly add 135 g of potassium iodate (KIO_3), and stir until all free iodine has dissolved. A clear orange-red solution occurs when all the KIO_3 has been added. Cool to room temperature, and dilute to 1800 ml with water. Keep the solution in amber glass bottles to prevent degradation.

7.1.6 Absorbing Solution, 0.1 M ICl. Dilute 100 ml of the 1.0 M ICl stock solution to 1 liter with water. Keep the solution in amber glass bottles and in darkness to prevent degradation. This reagent is stable for at least two months.

7.2 Sample Preparation and Analysis. The following reagents and standards are required for sample preparation and analysis:

7.2.1 Reagents.

7.2.1.1 Tin (II) Solution. Prepare fresh daily, and keep sealed when not being used. Completely dissolve 20 g of tin (II) chloride (or 25 g of tin (II) sulfate) crystals (Baker Analyzed reagent grade or any other brand that will give a clear solution) in 25 ml of concentrated HCl. Dilute to 250 ml with water. Do not substitute HNO_3 , $H_2 SO_4$, or other strong acids for the HCl.

7.2.1.2 Sulfuric Acid, 5 Percent (v/v). Dilute 25 ml of concentrated $H_2 SO_4$ to 500 ml with water.

7.2.2 Standards

7.2.2.1 Hg Stock Solution, 1 mg Hg/ml. Prepare and store all Hg standard solutions in borosilicate glass containers. Completely dissolve 0.1354 g of Hg (II) chloride in 75 ml of water in a 100-ml glass volumetric flask. Add 10 ml of concentrated HNO_3 , and adjust the volume to exactly 100 ml with water. Mix thoroughly. This solution is stable for at least one month.

7.2.2.2 Intermediate Hg Standard Solution, 10 µg Hg/ml. Prepare fresh weekly. Pipet 5.0 ml of the Hg stock solution (Section 7.2.2.1) into a 500-ml glass volumetric flask, and add 20 ml of the 5 percent $H_2 SO_4$ solution. Dilute to exactly 500 ml with water. Thoroughly mix the solution.

7.2.2.3 Working Hg Standard Solution, 200 ng Hg/ml. Prepare fresh daily. Pipet 5.0 ml of the intermediate Hg standard solution (Section 7.2.2.2) into a 250-ml volumetric glass flask. Add 10 ml of the 5 percent $H_2 SO_4$ and 2 ml of the 0.1 M ICl absorbing solution taken as a blank (Section 8.7.4.3), and dilute to 250 ml with water. Mix thoroughly.

8.0 Sample Collection, Preservation, Transport, and Storage

Because of the complexity of this method, testers should be trained and experienced with the test procedures to ensure reliable results. Since the amount of Hg that is collected generally is small, the method must be carefully applied to prevent contamination or loss of sample.

8.1 Pretest Preparation. Follow the general procedure outlined in Method 5, Section 8.1, except omit Sections 8.1.2 and 8.1.3.

8.2 Preliminary Determinations. Follow the general procedure outlined in Method 5, Section 8.2, with the exception of the following:

8.2.1 Select a nozzle size based on the range of velocity heads to assure that it is not necessary to change the nozzle size in order to maintain isokinetic sampling rates below 28 liters/min (1.0 cfm).

8.2.2 Perform test runs such that samples are obtained over a period or periods that accurately determine the maximum emissions that occur in a 24-hour period. In the case of cyclic operations, run sufficient tests for the accurate determination of the emissions that occur over the duration of the cycle. A minimum sample time of 2 hours is recommended. In some instances, high Hg or high SO_2 concentrations make it impossible to sample for the desired minimum time. This is indicated by reddening (liberation of free iodine) in the first impinger. In these cases, the sample run may be divided into two or more subruns to ensure that the absorbing solution is not depleted.

8.3 Preparation of Sampling Train.

8.3.1 Clean all glassware (probe, impingers, and connectors) by rinsing with 50 percent HNO_3 , tap water, 0.1 M ICl, tap water, and finally deionized distilled water. Place 100 ml of 0.1 M ICl in each of the first three impingers. Take care to prevent the absorbing solution from contacting any greased surfaces. Place approximately 200 g of preweighed silica gel in the fourth impinger. More silica gel may be used, but care should be taken to ensure that it is not entrained and carried out from the impinger during sampling. Place the silica gel container in a clean place for later use in the sample recovery. Alternatively, determine and record the weight of the silica gel plus impinger to the nearest 0.5 g.

8.3.2 Install the selected nozzle using a Viton A O-ring when stack temperatures are less than 260 °C (500 °F). Use a fiberglass string gasket if temperatures are higher. See APTD-0576 (Reference 3 in Method 5) for details. Other connecting systems using either 316 stainless steel or Teflon ferrules may be used. Mark the probe with heat-resistant tape or by some other method to denote the proper distance into the stack or duct for each sampling point.

8.3.3 Assemble the train as shown in Figure 101-1, using (if necessary) a very light coat of silicone grease on all ground glass joints. Grease only the outer portion (see APTD-0576) to avoid the possibility of contamination by the silicone grease.

NOTE: An empty impinger may be inserted between the third impinger and the silica gel to remove excess moisture from the sample stream.

8.3.4 After the sampling train has been assembled, turn on and set the probe heating system, if applicable, at the desired operating temperature. Allow time for the temperatures to stabilize. Place crushed ice around the impingers.

8.4 Leak-Check Procedures. Follow the leak-check procedures outlined in Method 5, Section 8.4.

8.5 Sampling Train Operation. Follow the general procedure outlined in Method 5, Section 8.5. For each run, record the data required on a data sheet such as the one shown in Figure 101-4.

8.6 Calculation of Percent Isokinetic. Same as Method 5, Section 8.6.

8.7 Sample Recovery. Begin proper cleanup procedure as soon as the probe is removed from the stack at the end of the sampling period.

8.7.1 Allow the probe to cool. When it can be safely handled, wipe off any external particulate matter near the tip of the probe nozzle, and place a cap over it. Do not cap off the probe tip tightly while the sampling train is cooling. Capping would create a vacuum and draw liquid out from the impingers.

8.7.2 Before moving the sampling train to the cleanup site, remove the probe from the train, wipe off the silicone grease, and cap the open outlet of the probe. Be careful not to lose any condensate that might be present. Wipe off the silicone grease from the impinger. Use either ground-glass stoppers, plastic caps, or serum caps to close these openings.

8.7.3 Transfer the probe and impinger assembly to a cleanup area that is clean, protected from the wind, and free of Hg contamination. The ambient air in laboratories located in the immediate vicinity of Hg-using facilities is not normally free of Hg contamination.

8.7.4 Inspect the train before and during disassembly, and note any abnormal conditions. Treat the samples as follows.

8.7.4.1 Container No. 1 (Impingers and Probe).

8.7.4.1.1 Using a graduated cylinder, measure the liquid in the first three impingers to within 1 ml. Record the volume of liquid present (*e.g.,* see Figure 5-6 of Method 5). This information is needed to calculate the moisture content of the effluent gas. (Use only glass storage bottles and graduated cylinders that have been precleaned as in Section 8.3.1) Place the contents of the first three impingers into a 1000-ml glass sample bottle.

8.7.4.1.2 Taking care that dust on the outside of the probe or other exterior surfaces does not get into the sample, quantitatively recover the Hg (and any condensate) from the probe nozzle, probe fitting, and probe liner as follows: Rinse these components with two 50-ml portions of 0.1 M ICl. Next, rinse the probe nozzle, fitting and liner, and each piece of connecting glassware between the probe liner and the back half of the third impinger with a maximum of 400 ml of water. Add all washings to the 1000-ml glass sample bottle containing the liquid from the first three impingers.

8.7.4.1.3 After all washings have been collected in the sample container, tighten the lid on the container to prevent leakage during shipment to the laboratory. Mark the height of the liquid to determine later whether leakage occurred during transport. Label the container to identify clearly its contents.

8.7.4.2 Container No. 2 (Silica Gel). Same as Method 5, Section 8.7.6.3.

8.7.4.3 Container No. 3 (Absorbing Solution Blank). Place 50 ml of the 0.1 M ICl absorbing solution in a 100-ml sample bottle. Seal the container. Use this blank to prepare the working Hg standard solution (Section 7.2.2.3).

9.0 Quality Control

9.1 Miscellaneous Quality Control Measures.

Section	Quality control measure	Effect
8.4 10.2	Sampling equipment leak-checks and calibration	Ensure accuracy and precision of sampling measurements.
10.5, 10.6	Spectrophotometer calibration	Ensure linearity of spectrophotometer response to standards.
11.3.3	Check for matrix effects	Eliminate matrix effects.

9.2 Volume Metering System Checks. Same as Method 5, Section 9.2.

10.0 Calibration and Standardizations

NOTE: Maintain a laboratory log of all calibrations.

10.1 Before use, clean all glassware, both new and used, as follows: brush with soap and tap water, liberally rinse with tap water, soak for 1 hour in 50 percent HNO_3 , and then rinse with deionized distilled water.

10.2 Sampling Equipment. Calibrate the sampling equipment according to the procedures outlined in the following sections of Method 5: Section 10.1 (Probe Nozzle), Section 10.2 (Pitot Tube Assembly), Section 10.3 (Metering System), Section 10.5 (Temperature Sensors), Section 10.6 (Barometer).

10.3 Aeration System Flow Rate Meter. Assemble the aeration system as shown in Figure 101-5. Set the outlet pressure on the aeration gas cylinder regulator to a minimum pressure of 500 mm Hg (10 psi), and use the flow metering valve and a bubble flowmeter or wet-test meter to obtain a flow rate of 1.5 ±0.1 liters/min (0.053 ±0.0035 cfm) through the aeration cell. After the calibration of the aeration system flow rate meter is complete, remove the bubble flowmeter from the system.

10.4 Optical Cell Heating System. Using a 50-ml graduated cylinder, add 50 ml of water to the bottle section of the aeration cell, and attach the bottle section to the bubbler section of the cell. Attach the aeration cell to the optical cell and while aerating at 1.5 ±0.1 liters/min (0.053 ±0.0035 cfm), determine the minimum variable transformer setting necessary to prevent condensation of moisture in the optical cell and in the connecting tubing. (This setting should not exceed 20 volts.)

10.5 Spectrophotometer and Recorder.

10.5.1 The Hg response may be measured by either peak height or peak area.

NOTE: The temperature of the solution affects the rate at which elemental Hg is released from a solution and, consequently, it affects the shape of the absorption curve (area) and the point of maximum absorbance (peak height). Therefore, to obtain reproducible results, bring all solutions to room temperature before use.

10.5.2 Set the spectrophotometer wavelength at 253.7 nm, and make certain the optical cell is at the minimum temperature that will prevent water condensation. Then set the recorder scale as follows: Using a 50-ml graduated cylinder, add 50 ml of water to the aeration cell bottle. Add three drops of Antifoam B to the bottle, and then pipet 5.0 ml of the working Hg standard solution into the aeration cell.

NOTE: Always add the Hg-containing solution to the aeration cell after the 50 ml of water.

10.5.3 Place a Teflon-coated stirring bar in the bottle. Before attaching the bottle section to the bubbler section of the aeration cell, make certain that (1) the aeration cell exit arm stopcock (Figure 101-3) is closed (so that Hg will not prematurely enter the optical cell when the reducing agent is being added) and (2) there is no flow through the bubbler. If conditions (1) and (2) are met, attach the bottle section to the bubbler section of the aeration cell. Pipet 5 ml of tin (II) reducing solution into the aeration cell through the side arm, and immediately stopper the side arm. Stir the solution for 15 seconds, turn on the recorder, open the aeration cell exit arm stopcock, and immediately initiate aeration with continued stirring. Determine the maximum absorbance of the standard, and set this value to read 90 percent of the recorder full scale.

10.6 Calibration Curve.

10.6.1 After setting the recorder scale, repeat the procedure in Section 10.5 using 0.0-, 1.0-, 2.0-, 3.0-, 4.0-, and 5.0-ml aliquots of the working standard solution (final amount of Hg in the aeration cell is 0, 200, 400, 600, 800, and 1000 ng, respectively). Repeat this procedure on each aliquot size until two consecutive peaks agree within 3 percent of their average value.

NOTE: To prevent Hg carryover from one sample to another, do not close the aeration cell from the optical cell until the recorder pen has returned to the baseline.)

10.6.2 It should not be necessary to disconnect the aeration gas inlet line from the aeration cell when changing samples. After separating the bottle and bubbler sections of the aeration cell, place the bubbler section into a 600-ml beaker containing approximately 400 ml of water. Rinse the bottle section of the aeration cell with a stream of water to remove all traces of the tin (II) reducing agent. Also, to prevent the loss of Hg before aeration, remove all traces of the reducing agent between samples by washing with water. It will be necessary, however, to wash the aeration cell parts with concentrated HCl if any of the following conditions occur: (1) A white film appears on any inside surface of the aeration cell, (2) the calibration curve changes suddenly, or (3) the replicate samples do not yield reproducible results.

10.6.3 Subtract the average peak height (or peak area) of the blank (0.0-ml aliquot)—which must be less than 2 percent of recorder full scale—from the averaged peak heights of the 1.0-, 2.0-, 3.0-, 4.0-, and 5.0-ml aliquot standards. If the blank absorbance is greater than 2 percent of full-scale, the probable cause is Hg contamination of a reagent or carry-over of Hg from a previous sample. Prepare the calibration curve by plotting the corrected peak height of each standard solution versus the corresponding final total Hg weight in the aeration cell (in ng), and draw the best fit straight line. This line should either pass through the origin or pass through a point no further from the origin than ±2 percent of the recorder full scale. If the line does not pass through or very near to the origin, check for nonlinearity of the curve and for incorrectly prepared standards.

11.0 Analytical Procedure

11.1 Sample Loss Check. Check the liquid level in each container to see whether liquid was lost during transport. If a noticeable amount of leakage occurred, either void the sample or use methods subject to the approval of the Administrator to account for the losses.

11.2 Sample Preparation. Treat each sample as follows:

11.2.1 Container No. 1 (Impingers and Probe). Carefully transfer the contents of Container No. 1 into a 1000-ml volumetric flask, and adjust the volume to exactly 1000 ml with water.

11.2.2 Dilutions. Pipet a 2-ml aliquot from the diluted sample from Section 11.2.1 into a 250-ml volumetric flask. Add 10 ml of 5 percent H_2SO_4, and adjust the volume to exactly 250 ml with water. This solution is stable for at least 72 hours.

NOTE: The dilution factor will be 250/2 for this solution.

11.3 Analysis. Calibrate the analytical equipment and develop a calibration curve as outlined in Sections 10.3 through 10.6.

11.3.1 Mercury Samples. Repeat the procedure used to establish the calibration curve with an appropriately sized aliquot (1 to 5 ml) of the diluted sample (from Section 11.2.2) until two consecutive peak heights agree within 3 percent of their average value. The peak maximum of an aliquot (except the 5-ml aliquot) must be greater than 10 percent of the recorder full scale. If the peak maximum of a 1.0-ml aliquot is off scale on the recorder, further dilute the original source sample to bring the Hg concentration into the calibration range of the spectrophotometer.

11.3.2 Run a blank and standard at least after every five samples to check the spectrophotometer calibration. The peak height of the blank must pass through a point no further from the origin than ±2 percent of the recorder full scale. The difference between the measured concentration of the standard (the product of the corrected peak height and the reciprocal of the least squares slope) and the actual concentration of the standard must be less than 7 percent, or recalibration of the analyzer is required.

11.3.3 Check for Matrix Effects (optional). Use the Method of Standard Additions as follows to check at least one sample from each source for matrix effects on the Hg results. The Method of Standard Additions procedures described on pages 9-4 and 9-5 of the section entitled “General Information” of the Perkin Elmer Corporation Atomic Absorption Spectrophotometry Manual, Number 303-0152 (Reference 16 in Section 16.0) are recommended. If the results of the Method of Standard Additions procedure used on the single source sample do not agree to within ±5 percent of the value obtained by the routine atomic absorption analysis, then reanalyze all samples from the source using the Method of Standard Additions procedure.

11.4 Container No. 2 (Silica Gel). Weigh the spent silica gel (or silica gel plus impinger) to the nearest 0.5 g using a balance. (This step may be conducted in the field.)

12.0 Data Analysis and Calculations

Carry out calculations, retaining at least one extra decimal significant figure beyond that of the acquired data. Round off figures only after the final calculation. Other forms of the equations may be used as long as they give equivalent results.

12.1 Average Dry Gas Meter Temperature and Average Orifice Pressure Drop, Dry Gas Volume, Volume of Water Vapor Condensed, Moisture Content, and Isokinetic Variation. Same as Method 5, Sections 12.2 through 12.5 and 12.11, respectively.

12.2 Stack Gas Velocity. Using the data from this test and Equation 2-9 of Method 2, calculate the average stack gas velocity v_s .

12.3 Total Mercury.

12.3.1 For each source sample, correct the average maximum absorbance of the two consecutive samples whose peak heights agree within 3 percent of their average for the contribution of the solution blank (see Section 10.6.3). Use the calibration curve and these corrected averages to determine the final total weight of Hg in ng in the aeration cell for each source sample.

12.3.2 Correct for any dilutions made to bring the sample into the working range of the spectrophotometer. Then calculate the Hg in the original solution, m_{Hg} , as follows:

$$m_{Hg} = \left[C_{Hg(AC)}\left(DF\right)\left(V_f\right)\left(10^{-3}\right)\right]/S \qquad \text{Eq. 101-1}$$

Where:

$C_{Hg(AC)}$ = Total ng of Hg in aliquot analyzed (reagent blank subtracted).

DF = Dilution factor for the Hg-containing solution (before adding to the aeration cell; *e.g.,* DF = 250/2 if the source samples were diluted as described in Section 11.2.2).

V_f = Solution volume of original sample, 1000 ml for samples diluted as described in Section 11.2.1.

10^{-3} = Conversion factor, µg/ng.

S = Aliquot volume added to aeration cell, ml.

12.4 Mercury Emission Rate. Calculate the daily Hg emission rate, R, using Equation 101-2. For continuous operations, the operating time is equal to 86,400 seconds per day. For cyclic operations, use only the time per day each stack is in operation. The total Hg emission rate from a source will be the summation of results from all stacks.

$$R = \frac{Km_{Hg}V_sA_s\left(86,400\times10^{-6}\right)}{\left[V_{m(std)}+V_{w(std)}\right]\left(T_s/P_s\right)} \qquad \text{Eq. 101-2}$$

Where:

K_1 = 0.3858 °K/mm Hg for metric units.

K_1 = 17.64 °R/in. Hg for English units.

K_3 = 10^{-6} g/µg for metric units.

= 2.2046 “ × 10^{-9} lb/µg for English units.

P_s = Absolute stack gas pressure, mm Hg (in. Hg).

t = Daily operating time, sec/day.

T_s = Absolute average stack gas temperature, °K (°R).

$V_{m(std)}$ = Dry gas sample volume at standard conditions, scm (scf).

$V_{w(std)}$ = Volume of water vapor at standard conditions, scm (scf).

12.5 Determination of Compliance. Each performance test consists of three repetitions of the applicable test method. For the purpose of determining compliance with an applicable national emission standard, use the average of the results of all repetitions.

13.0 Method Performance

The following estimates are based on collaborative tests, wherein 13 laboratories performed duplicate analyses on two Hg-containing samples from a chlor-alkali plant and on one laboratory-prepared sample of known Hg concentration. The sample concentrations ranged from 2 to 65 µg Hg/ml.

13.1 Precision. The estimated intra-laboratory and inter-laboratory standard deviations are 1.6 and 1.8 µg Hg/ml, respectively.

13.2 Accuracy. The participating laboratories that analyzed a 64.3 µg Hg/ml (in 0.1 M ICl) standard obtained a mean of 63.7 µg Hg/ml.

13.3 Analytical Range. After initial dilution, the range of this method is 0.5 to 120 µg Hg/ml. The upper limit can be extended by further dilution of the sample.

14.0 Pollution Prevention. [Reserved]

15.0 Waste Management. [Reserved]

16.0 References

Same as Method 5, Section 17.0, References 1-3, 5, and 6, with the addition of the following:

1. Determining Dust Concentration in a Gas Stream. ASME Performance Test Code No. 27. New York, NY. 1957.

2. DeVorkin, Howard, *et al.* Air Pollution Source Testing Manual. Air Pollution Control District. Los Angeles, CA. November 1963.

3. Hatch, W.R., and W.I. Ott. Determination of Sub-Microgram Quantities of Mercury by Atomic Absorption Spectrophotometry. Anal. Chem. 40:2085-87. 1968.

4. Mark, L.S. Mechanical Engineers' Handbook. McGraw-Hill Book Co., Inc. New York, NY. 1951.

5. Western Precipitation Division of Joy Manufacturing Co. Methods for Determination of Velocity, Volume, Dust and Mist Content of Gases. Bulletin WP-50. Los Angeles, CA. 1968.

6. Perry, J.H. Chemical Engineers' Handbook. McGraw-Hill Book Co., Inc. New York, NY. 1960.

7. Shigehara, R.T., W.F. Todd, and W.S. Smith. Significance of Errors in Stack Sampling Measurements. Stack Sampling News. *1* (3):6-18. September 1973.

8. Smith, W.S., R.T. Shigehara, and W.F. Todd. A Method of Interpreting Stack Sampling Data. Stack Sampling News. *1* (2):8-17. August 1973.

9. Standard Method for Sampling Stacks for Particulate Matter. In: 1971 Annual Book of ASTM Standards, Part 23. ASTM Designation D 2928-71. Philadelphia, PA 1971.

10. Vennard, J.K. Elementary Fluid Mechanics. John Wiley and Sons, Inc. New York. 1947.

11. Mitchell, W.J. and M.R. Midgett. Improved Procedure for Determining Mercury Emissions from Mercury Cell Chlor-Alkali Plants. J. APCA. *26* :674-677. July 1976.

12. Shigehara, R.T. Adjustments in the EPA Nomograph for Different Pitot Tube Coefficients and Dry Molecular Weights. Stack Sampling News. *2* :4-11. October 1974.

13. Vollaro, R.F. Recommended Procedure for Sample Traverses in Ducts Smaller than 12 Inches in Diameter. U.S. Environmental Protection Agency, Emission Measurement Branch. Research Triangle Park, NC. November 1976.

14. Klein, R. and C. Hach. Standard Additions: Uses and Limitation in Spectrophotometric Measurements. Amer. Lab. *9* :21. 1977.

15. Perkin Elmer Corporation. Analytical Methods for Atomic Absorption Spectrophotometry. Norwalk, Connecticut. September 1976.

17.0 Tables, Diagrams, Flowcharts, and Validation Data

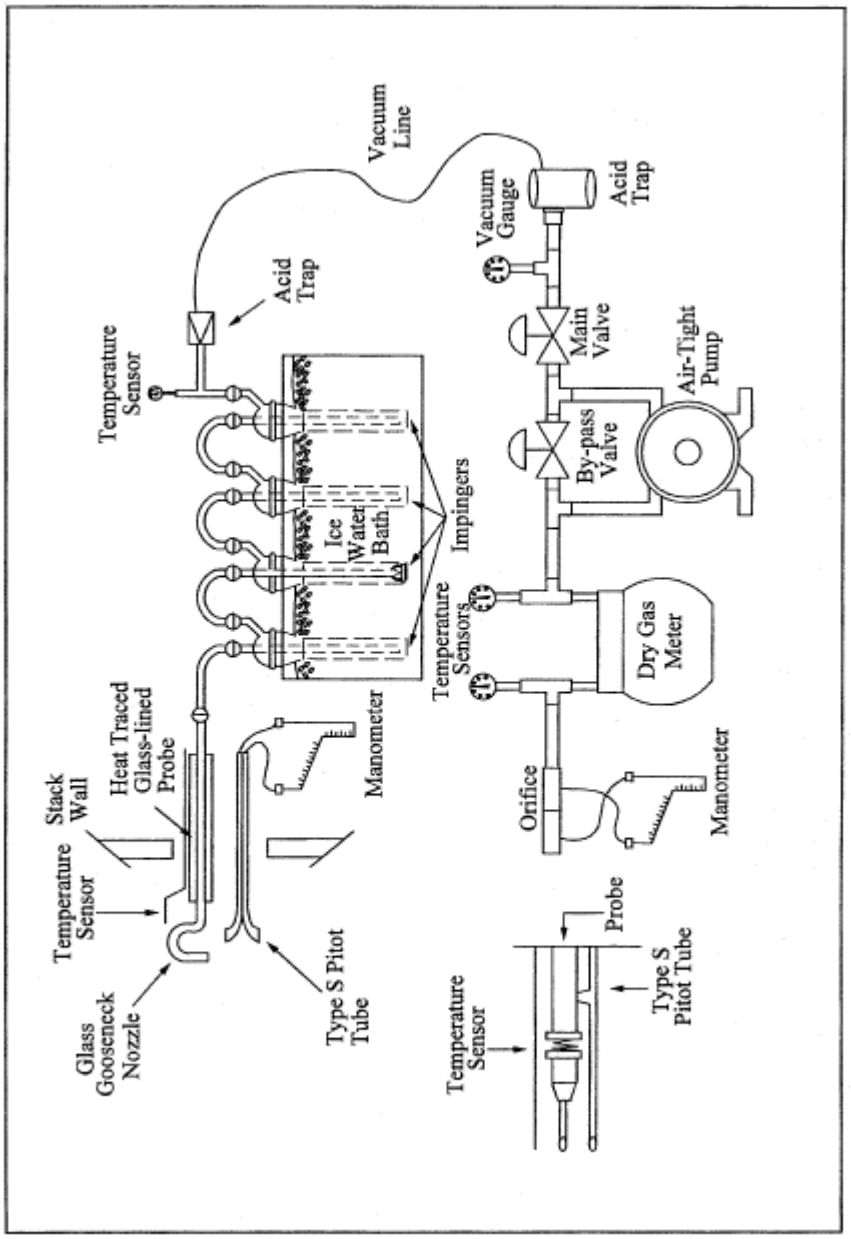

Figure 101-1. Mercury Sampling Train.

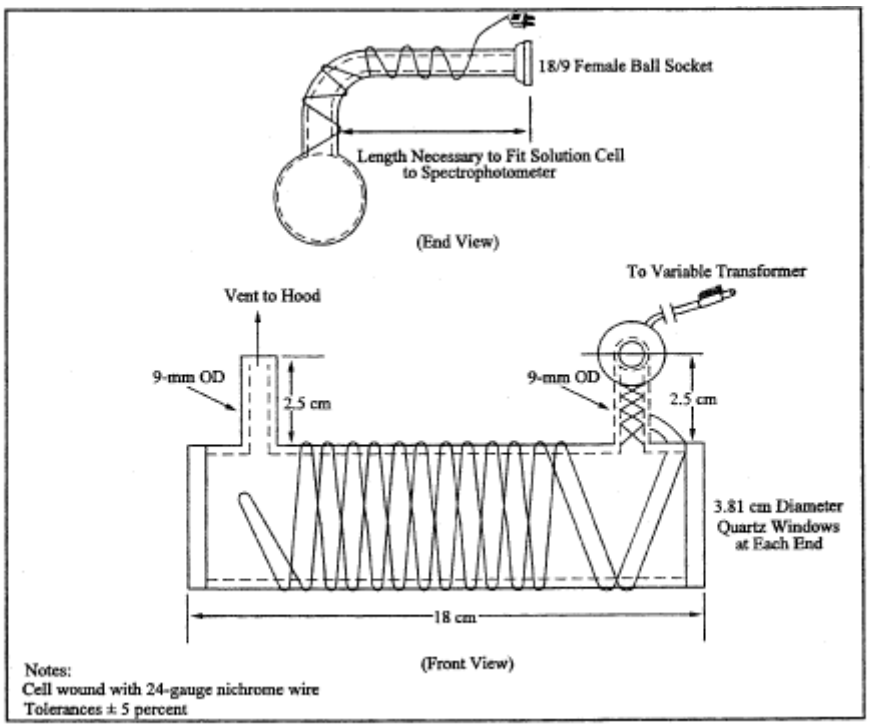

Figure 101-2. Optical Cell.

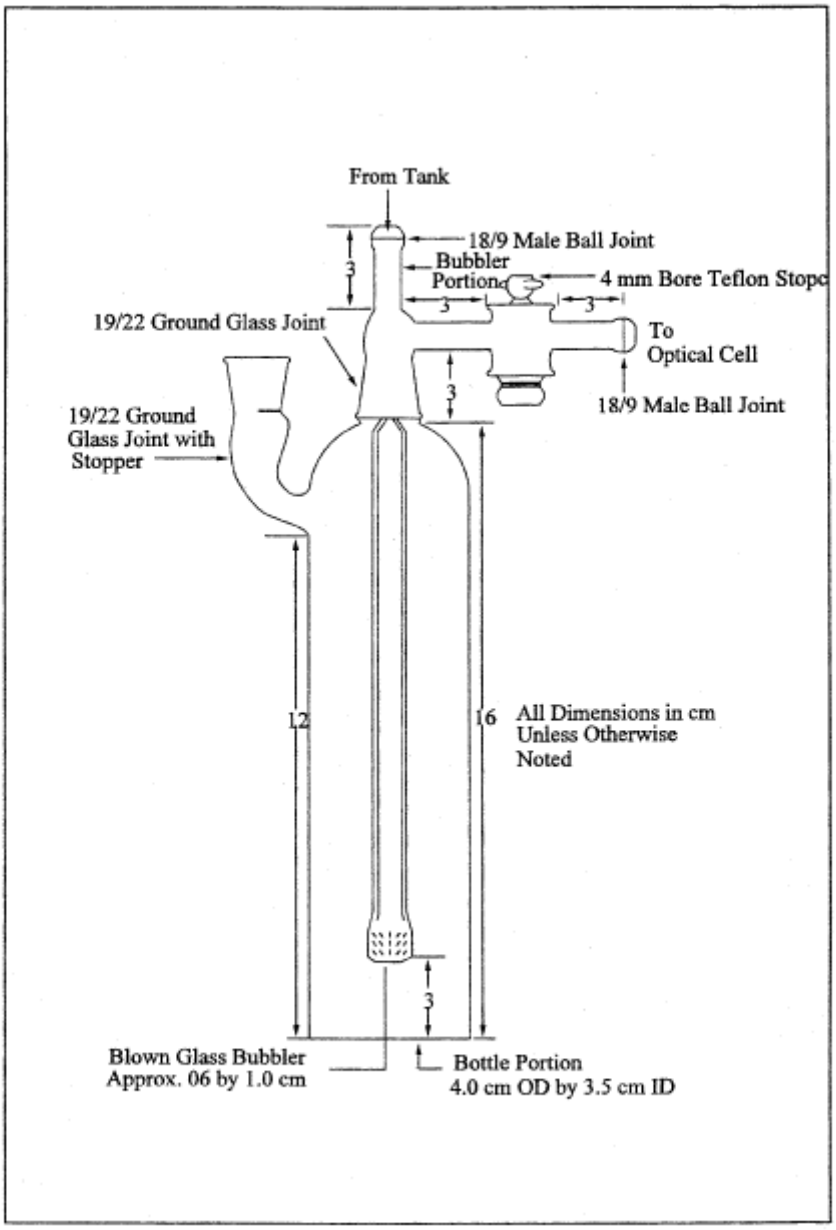

Figure 101-3. Aeration Cell.

Plant _____
Location _____
Operator _____
Date _____
Run No. _____
Sample box No. _____
Filter box No. _____
Meter H@ _____
C factor _____
Pitot tube coefficient, C_p _____

SCHEMATIC OF STACK CROSS SECTION

Ambient temperature _____
Barometric pressure _____
Assumed moisture, % _____
Probe length, (ft.) _____
Nozzle identification No. _____
Average calibrated nozzle diameter, (in.) _____
Probe heater setting _____
Leak rate, (cfm) _____
Probe liner material _____
Static pressure, (in. Hg) _____
Filter No. _____

Traverse point number	Sampling time	Vacuum	Stack temperature	Velocity head	Pressure differential across orifice meter	Gas meter reading	Gas sample temperature at dry gas meter		Filter holder* temperature	Temperature of gas leaving condenser or last impinger
							Inlet	Outlet		
	min.	(in.Hg)	(T_s) (°F)	(ΔP_s) (in. H_2O)	(in. H_2O)	(ft³)	(°F)	(°F)	(°F)	(°F)
Total							Avg.	Avg.		
Average							Avg.			

* If Applicable

Figure 101-4. Mercury Field Data.

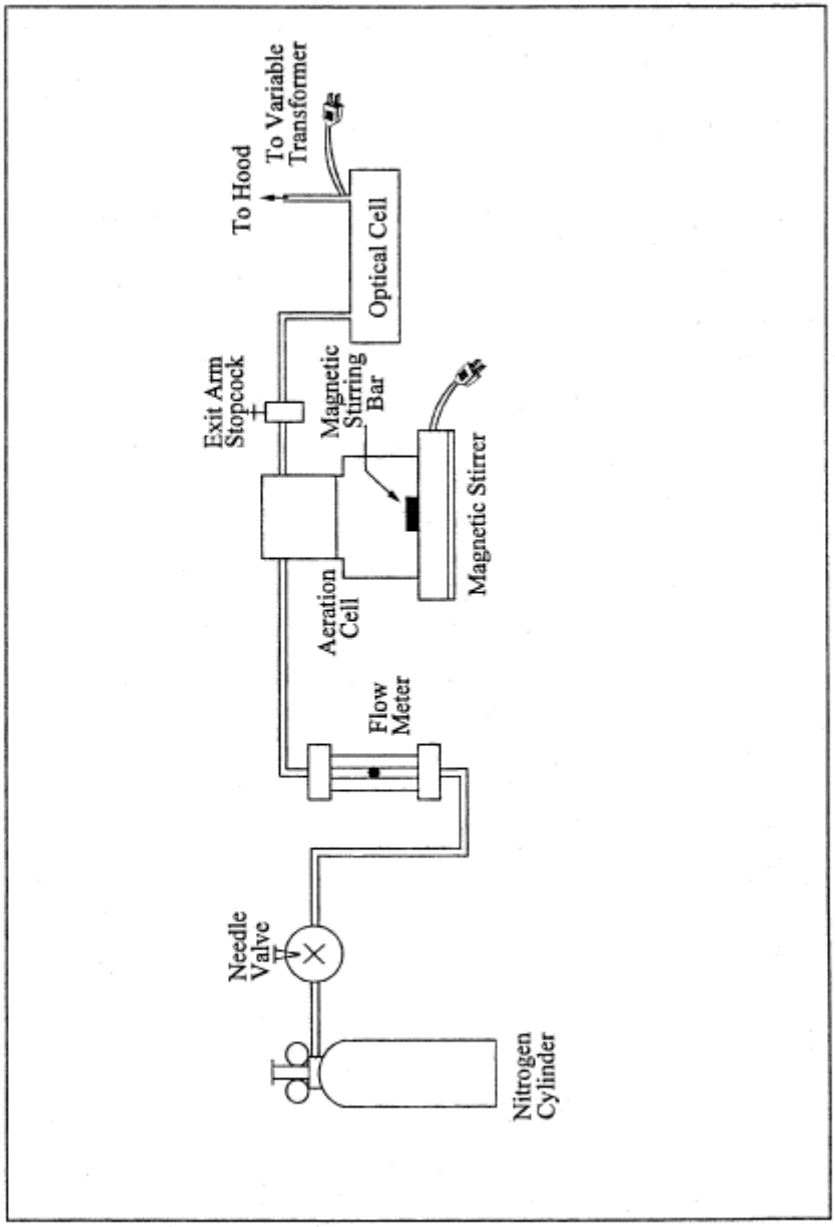

Figure 101-5. Schematic of Aeration System.

Method 101A—Determination of Particulate and Gaseous Mercury Emissions From Sewage Sludge Incinerators

NOTE: This method does not include all of the specifications (*e.g.,* equipment and supplies) and procedures (*e.g.,* sampling and analytical) essential to its performance. Some material is incorporated by reference from methods in appendix A to 40 CFR part 60 and in this part. Therefore, to obtain reliable results, persons using this method should also have a thorough knowledge of at least the following additional test methods: Methods 1, Method 2, Method 3, and Method 5 of part 60 (appendix A), and Method 101 part 61 (appendix B).

1.0 Scope and Application

1.1 Analytes.

Analyte	CAS No.	Sensitivity
Mercury (Hg)	7439-97-6	Dependent upon spectrophotometer and recorder.

1.2 Applicability. This method is applicable for the determination of Hg emissions from sewage sludge incinerators and other sources as specified in an applicable subpart of the regulations.

1.3 Data Quality Objectives. Adherence to the requirements of this method will enhance the quality of the data obtained from air pollutant sampling methods.

2.0 Summary of Method

2.1 Particulate and gaseous Hg emissions are withdrawn isokinetically from the source and are collected in acidic potassium permanganate ($KMnO_4$) solution. The Hg collected (in the mercuric form) is reduced to elemental Hg, which is then aerated from the solution into an optical cell and measured by atomic absorption spectrophotometry.

3.0 Definitions. [Reserved]

4.0 Interferences

4.1 Sample Collection. Excessive oxidizable organic matter in the stack gas prematurely depletes the $KMnO_4$ solution and thereby prevents further collection of Hg.

4.2 Analysis. Condensation of water vapor on the optical cell windows causes a positive interference.

5.0 Safety

5.1 Disclaimer. This method may involve hazardous materials, operations, and equipment. This test method may not address all of the safety problems associated with its use. It is the responsibility of the user of this test method to establish appropriate safety and health practices and determine the applicability of regulatory limitations prior to performing this test method.

5.2 Corrosive Reagents. The following reagents are hazardous. Personal protective equipment and safe procedures are useful in preventing chemical splashes. If contact occurs, immediately flush with copious amounts of water for at least 15 minutes. Remove clothing under shower and decontaminate. Treat residual chemical burns as thermal burns.

5.2.1 Hydrochloric Acid (HCl). Highly toxic. Vapors are highly irritating to eyes, skin, nose, and lungs, causing severe damage. May cause bronchitis, pneumonia, or edema of lungs. Exposure to concentrations of 0.13 to 0.2 percent can be lethal to humans in a few minutes. Provide ventilation to limit exposure. Reacts with metals, producing hydrogen gas.

5.2.2 Nitric Acid (HNO_3). Highly corrosive to eyes, skin, nose, and lungs. Vapors cause bronchitis, pneumonia, or edema of lungs. Reaction to inhalation may be delayed as long as 30 hours and still be fatal. Provide ventilation to limit exposure. Strong oxidizer. Hazardous reaction may occur with organic materials such as solvents.

5.2.3 Sulfuric acid ($H_2 SO_4$). Rapidly destructive to body tissue. Will cause third degree burns. Eye damage may result in blindness. Inhalation may be fatal from spasm of the larynx, usually within 30 minutes. May cause lung tissue damage with edema. 3 mg/m^3 will cause lung damage in uninitiated. 1 mg/m^3 for 8 hours will cause lung damage or, in higher concentrations, death. Provide ventilation to limit inhalation. Reacts violently with metals and organics.

5.3 Chlorine Evolution. Hydrochloric acid reacts with $KMnO_4$ to liberate chlorine gas. Although this is a minimal concern when small quantities of HCl (5-10 ml) are used in the impinger rinse, a potential safety hazard may still exist. At sources that emit higher concentrations of oxidizable materials (*e.g.,* power plants), more HCl may be required to remove the larger amounts of brown deposit formed in the impingers. In such cases, the potential safety hazards due to sample container pressurization are greater, because of the larger volume of HCl rinse added to the recovered sample. These hazards are eliminated by storing and analyzing the HCl impinger wash separately from the permanganate impinger sample.

6.0 Equipment and Supplies

6.1 Sample Collection and Sample Recovery. Same as Method 101, Sections 6.1 and 6.2, respectively, with the following exceptions:

6.1.1 Probe Liner. Same as in Method 101, Section 6.1.2, except that if a filter is used ahead of the impingers, the probe heating system must be used to minimize the condensation of gaseous Hg.

6.1.2 Filter Holder (Optional). Borosilicate glass with a rigid stainless-steel wire-screen filter support (do not use glass frit supports) and a silicone rubber or Teflon gasket, designed to provide a positive seal against leakage from outside or around the filter. The filter holder must be equipped with a filter heating system capable of maintaining a temperature around the filter holder of 120 ±14 °C (248 ±25 °F) during sampling to minimize both water and gaseous Hg condensation. A filter may also be used in cases where the stream contains large quantities of particulate matter.

6.2 Sample Analysis. Same as Method 101, Section 6.3, with the following additions and exceptions:

6.2.1 Volumetric Pipets. Class A; 1-, 2-, 3-, 4-, 5-, 10-, and 20-ml.

6.2.2 Graduated Cylinder. 25-ml.

6.2.3 Steam Bath.

6.2.4 Atomic Absorption Spectrophotometer or Equivalent. Any atomic absorption unit with an open sample presentation area in which to mount the optical cell is suitable. Instrument settings recommended by the particular manufacturer should be followed. Instruments designed specifically for the measurement of mercury using the cold-vapor technique are commercially available and may be substituted for the atomic absorption spectrophotometer.

6.2.5 Optical Cell. Alternatively, a heat lamp mounted above the cell or a moisture trap installed upstream of the cell may be used.

6.2.6 Aeration Cell. Alternatively, aeration cells available with commercial cold vapor instrumentation may be used.

6.2.7 Aeration Gas Cylinder. Nitrogen, argon, or dry, Hg-free air, equipped with a single-stage regulator. Alternatively, aeration may be provided by a peristaltic metering pump. If a commercial cold vapor instrument is used, follow the manufacturer's recommendations.

7.0 Reagents and Standards

Unless otherwise indicated, it is intended that all reagents conform to the specifications established by the Committee on Analytical Reagents of the American Chemical Society, where such specifications are available; otherwise, use the best available grade.

7.1 Sample Collection and Recovery. The following reagents are required for sample collection and recovery:

7.1.1 Water. Deionized distilled, to conform to ASTM D 1193-77 or 91 Type 1. If high concentrations of organic matter are not expected to be present, the analyst may eliminate the $KMnO_4$ test for oxidizable organic matter. Use this water in all dilutions and solution preparations.

7.1.2 Nitric Acid, 50 Percent (V/V). Mix equal volumes of concentrated HNO_3 and water, being careful to add the acid to the water slowly.

7.1.3 Silica Gel. Indicating type, 6 to 16 mesh. If previously used, dry at 175 °C (350 °F) for 2 hours. New silica gel may be used as received.

7.1.4 Filter (Optional). Glass fiber filter, without organic binder, exhibiting at least 99.95 percent efficiency on 0.3-µm dioctyl phthalate smoke particles. The filter in cases where the gas stream contains large quantities of particulate matter, but blank filters should be analyzed for Hg content.

7.1.5 Sulfuric Acid, 10 Percent (V/V). Carefully add and mix 100 ml of concentrated $H_2 SO_4$ to 900 ml of water.

7.1.6 Absorbing Solution, 4 Percent $KMnO_4$ (W/V). Prepare fresh daily. Dissolve 40 g of $KMnO_4$ in sufficient 10 percent $H_2 SO_4$ to make 1 liter. Prepare and store in glass bottles to prevent degradation.

7.1.7 Hydrochloric Acid, 8 N. Carefully add and mix 67 ml of concentrated HCl to 33 ml of water.

7.2 Sample Analysis. The following reagents and standards are required for sample analysis:

7.2.1 Water. Same as in Section 7.1.1.

7.2.2 Tin (II) Solution. Prepare fresh daily, and keep sealed when not being used. Completely dissolve 20 g of tin (II) chloride (or 25 g of tin (II) sulfate) crystals (Baker Analyzed reagent grade or any other brand that will give a clear solution) in 25 ml of concentrated HCl. Dilute to 250 ml with water. Do not substitute HNO_3 $H2SO_4$, or other strong acids for the HCl.

7.2.3 Sodium Chloride-Hydroxylamine Solution. Dissolve 12 g of sodium chloride and 12 g of hydroxylamine sulfate (or 12 g of hydroxylamine hydrochloride) in water and dilute to 100 ml.

7.2.4 Hydrochloric Acid, 8 N. Same as Section 7.1.7.

7.2.5 Nitric Acid, 15 Percent (V/V). Carefully add 15 ml HNO_3 to 85 ml of water.

7.2.6 Antifoam B Silicon Emulsion. J.T. Baker Company (or equivalent).

7.2.7 Mercury Stock Solution, 1 mg Hg/ml. Prepare and store all Hg standard solutions in borosilicate glass containers. Completely dissolve 0.1354 g of Hg (II) chloride in 75 ml of water. Add 10 ml of concentrated HNO_3 , and adjust the volume to exactly 100 ml with water. Mix thoroughly. This solution is stable for at least one month.

7.2.8 Intermediate Hg Standard Solution, 10 µg/ml. Prepare fresh weekly. Pipet 5.0 ml of the Hg stock solution (Section 7.2.7) into a 500 ml volumetric flask, and add 20 ml of 15 percent HNO_3 solution. Adjust the volume to exactly 500 ml with water. Thoroughly mix the solution.

7.2.9 Working Hg Standard Solution, 200 ng Hg/ml. Prepare fresh daily. Pipet 5.0 ml from the “Intermediate Hg Standard Solution” (Section 7.2.8) into a 250-ml volumetric flask. Add 5 ml of 4 percent $KMnO_4$ absorbing solution and 5 ml of 15 percent HNO_3 . Adjust the volume to exactly 250 ml with water. Mix thoroughly.

7.2.10 Potassium Permanganate, 5 Percent (W/V). Dissolve 5 g of $KMnO_4$ in water and dilute to 100 ml.

7.2.11 Filter. Whatman No. 40, or equivalent.

8.0 Sample Collection, Preservation, Transport, and Storage

Same as Method 101, Section 8.0, with the exception of the following:

8.1 Preliminary Determinations. Same as Method 101, Section 8.2, except that the liberation of free iodine in the first impinger due to high Hg or sulfur dioxide concentrations is not applicable. In this method, high oxidizable organic content may make it impossible to sample for the desired minimum time. This problem is indicated by the complete bleaching of the purple color of the $KMnO_4$ solution. In cases where an excess of water condensation is encountered, collect two runs to make one sample, or add an extra impinger in front of the first impinger (also containing acidified $KMnO_4$ solution).

8.2 Preparation of Sampling Train. Same as Method 101, Section 8.3, with the exception of the following:

8.2.1 In this method, clean all the glass components by rinsing with 50 percent HNO_3 , tap water, 8 N HCl, tap water, and finally with deionized distilled water. Then place 50 ml of absorbing solution in the first impinger and 100 ml in each of the second and third impingers.

8.2.2 If a filter is used, use a pair of tweezers to place the filter in the filter holder. Be sure to center the filter, and place the gasket in the proper position to prevent the sample gas stream from bypassing the filter. Check the filter for tears after assembly is completed. Be sure also to set the filter heating system at the desired operating temperature after the sampling train has been assembled.

8.3 Sampling Train Operation. In addition to the procedure outlined in Method 101, Section 8.5, maintain a temperature around the filter (if applicable) of 120 ±14 °C (248 ±25 °F).

8.4 Sample Recovery. Same as Method 101, Section 8.7, with the exception of the following:

8.4.1 Transfer the probe, impinger assembly, and (if applicable) filter assembly to the cleanup area.

8.4.2 Treat the sample as follows:

8.4.2.1 Container No. 1 (Impinger, Probe, and Filter Holder) and, if applicable, Container No. 1A (HCl rinse).

8.4.2.1.1 Using a graduated cylinder, measure the liquid in the first three impingers to within 1 ml. Record the volume of liquid present (*e.g.,* see Figure 5-6 of Method 5). This information is needed to calculate the moisture content of the effluent gas. (Use only graduated cylinder and glass storage bottles that have been precleaned as in Section 8.2.1.) Place the contents of the first three impingers (four if an extra impinger was added as described in Section 8.1) into a 1000-ml glass sample bottle labeled Container No. 1.

NOTE: If a filter is used, remove the filter from its holder as outlined under Section 8.4.3.

8.4.2.1.2 Taking care that dust on the outside of the probe or other exterior surfaces does not get into the sample, quantitatively recover the Hg (and any condensate) from the probe nozzle, probe fitting, probe liner, front half of the filter holder (if applicable), and impingers as follows: Rinse these components with a total of 400 ml (350 ml if an extra impinger was added as described in Section 8.1) of fresh absorbing solution, carefully assuring removal of all loose particulate matter from the impingers; add all washings to the 1000 ml glass sample bottle. To remove any residual brown deposits on the glassware following the permanganate rinse, rinse with approximately 100 ml of water, carefully assuring removal of all loose particulate matter from the impingers. Add this rinse to Container No. 1.

8.4.2.1.3 If no visible deposits remain after this water rinse, do not rinse with 8 N HCl. If deposits do remain on the glassware after the water rinse, wash impinger walls and stems with 25 ml of 8 N HCl, and place the wash in a separate container labeled Container No. 1A as follows: Place 200 ml of water in a sample container labeled Container No. 1A. Wash the impinger walls and stem with the HCl by turning the impinger on its side and rotating it so that the HCl contacts all inside surfaces. Pour the HCl wash carefully with stirring into Container No. 1A.

8.4.2.1.4 After all washings have been collected in the appropriate sample container(s), tighten the lid(s) on the container(s) to prevent leakage during shipment to the laboratory. Mark the height of the fluid level to allow subsequent determination of whether leakage has occurred during transport. Label each container to identify its contents clearly.

8.4.3 Container No. 2 (Silica Gel). Same as Method 5, Section 8.7.6.3.

8.4.4 Container No. 3 (Filter). If a filter was used, carefully remove it from the filter holder, place it in a 100-ml glass sample bottle, and add 20 to 40 ml of absorbing solution. If it is necessary to fold the filter, be sure that the particulate cake is inside the fold. Carefully transfer to the 100-ml sample bottle any particulate matter and filter fibers that adhere to the filter holder gasket by using a dry Nylon bristle brush and a sharp-edged blade. Seal the container. Label the container to identify its contents clearly. Mark the height of the fluid level to allow subsequent determination of whether leakage has occurred during transport.

8.4.5 Container No. 4 (Filter Blank). If a filter was used, treat an unused filter from the same filter lot as that used for sampling according to the procedures outlined in Section 8.4.4.

8.4.6 Container No. 5 (Absorbing Solution Blank). Place 650 ml of 4 percent $KMnO_4$ absorbing solution in a 1000-ml sample bottle. Seal the container.

8.4.7 Container No. 6 (HCl Rinse Blank). Place 200 ml of water in a 1000-ml sample bottle, and add 25 ml of 8 N HCl carefully with stirring. Seal the container. Only one blank sample per 3 runs is required.

9.0 Quality Control

9.1 Miscellaneous Quality Control Measures.

Section	Quality control measure	Effect
8.0, 10.0	Sampling equipment leak-checks and calibration	Ensure accuracy and precision of sampling measurements.
10.2	Spectrophotometer calibration	Ensure linearity of spectrophotometer response to standards.
11.3.3	Check for matrix effects	Eliminate matrix effects.

9.2 Volume Metering System Checks. Same as Method 5, Section 9.2.

10.0 Calibration and Standardization

Same as Method 101, Section 10.0, with the following exceptions:

10.1 Optical Cell Heating System Calibration. Same as in Method 101, Section 10.4, except use a-25 ml graduated cylinder to add 25 ml of water to the bottle section of the aeration cell.

10.2 Spectrophotometer and Recorder Calibration.

10.2.1 The Hg response may be measured by either peak height or peak area.

NOTE: The temperature of the solution affects the rate at which elemental Hg is released from a solution and, consequently, it affects the shape of the absorption curve (area) and the point of maximum absorbance (peak height). To obtain reproducible results, all solutions must be brought to room temperature before use.

10.2.2 Set the spectrophotometer wave length at 253.7 nm, and make certain the optical cell is at the minimum temperature that will prevent water condensation. Then set the recorder scale as follows: Using a 25-ml graduated cylinder, add 25 ml of water to the aeration cell bottle. Add three drops of Antifoam B to the bottle, and then pipet 5.0 ml of the working Hg standard solution into the aeration cell.

NOTE: Always add the Hg-containing solution to the aeration cell after the 25 ml of water.

10.2.3 Place a Teflon-coated stirring bar in the bottle. Add 5 ml of absorbing solution to the aeration bottle, and mix well. Before attaching the bottle section to the bubbler section of the aeration cell, make certain that (1) the aeration cell exit arm stopcock (Figure 101-3 of Method 101) is closed (so that Hg will not prematurely enter the optical cell when the reducing agent is being added) and (2) there is no flow through the bubbler. If conditions (1) and (2) are

met, attach the bottle section to the bubbler section of the aeration cell. Add sodium chloride-hydroxylamine in 1 ml increments until the solution is colorless. Now add 5 ml of tin (II) solution to the aeration bottle through the side arm, and immediately stopper the side arm. Stir the solution for 15 seconds, turn on the recorder, open the aeration cell exit arm stopcock, and immediately initiate aeration with continued stirring. Determine the maximum absorbance of the standard, and set this value to read 90 percent of the recorder full scale.

11.0 Analytical Procedure

11.1 Sample Loss Check. Check the liquid level in each container to see if liquid was lost during transport. If a noticeable amount of leakage occurred, either void the sample or use methods subject to the approval of the Administrator to account for the losses.

11.2 Sample Preparation. Treat sample containers as follows:

11.2.1 Containers No. 3 and No. 4 (Filter and Filter Blank).

11.2.1.1 If a filter is used, place the contents, including the filter, of Containers No. 3 and No. 4 in separate 250-ml beakers, and heat the beakers on a steam bath until most of the liquid has evaporated. Do not heat to dryness. Add 20 ml of concentrated HNO_3 to the beakers, cover them with a watch glass, and heat on a hot plate at 70 °C (160 °F) for 2 hours. Remove from the hot plate.

11.2.1.2 Filter the solution from digestion of the Container No. 3 contents through Whatman No. 40 filter paper, and save the filtrate for addition to the Container No. 1 filtrate as described in Section 11.2.2. Discard the filter paper.

11.2.1.3 Filter the solution from digestion of the Container No. 4 contents through Whatman No. 40 filter paper, and save the filtrate for addition to Container No. 5 filtrate as described in Section 11.2.3 below. Discard the filter paper.

11.2.2 Container No. 1 (Impingers, Probe, and Filter Holder) and, if applicable, No. 1A (HCl rinse).

11.2.2.1 Filter the contents of Container No. 1 through Whatman No. 40 filter paper into a 1 liter volumetric flask to remove the brown manganese dioxide (MnO_2) precipitate. Save the filter for digestion of the brown MnO_2 precipitate. Add the sample filtrate from Container No. 3 to the 1-liter volumetric flask, and dilute to volume with water. If the combined filtrates are greater than 1000 ml, determine the volume to the nearest ml and make the appropriate corrections for blank subtractions. Mix thoroughly. Mark the filtrate as analysis Sample No. A.1 and analyze for Hg within 48 hr of the filtration step. Place the saved filter, which was used to remove the brown MnO_2 precipitate, into an appropriate sized container. In a laboratory hood, add 25 ml of 8 N HCl to the filter and allow to digest for a minimum of 24 hours at room temperature.

11.2.2.2 Filter the contents of Container 1A through Whatman No. 40 filter paper into a 500-ml volumetric flask. Then filter the digestate of the brown MnO_2 precipitate from Container No. 1 through Whatman No. 40 filter paper into the same 500-ml volumetric flask, and dilute to volume with water. Mark this combined 500 ml dilute solution as analysis Sample No. A.2. Discard the filters.

11.2.3 Container No. 5 (Absorbing Solution Blank) and No. 6 (HCl Rinse Blank).

11.2.3.1 Treat Container No. 5 as Container No. 1 (as described in Section 11.2.2), except substitute the filter blank filtrate from Container No. 4 for the sample filtrate from Container No. 3, and mark as Sample A.1 Blank.

11.2.3.2 Treat Container No. 6 as Container No. 1A, (as described in Section 11.2.2, except substitute the filtrate from the digested blank MnO_2 precipitate for the filtrate from the digested sample MnO_2 precipitate, and mark as Sample No. A.2 Blank.

NOTE: When analyzing samples A.1 Blank and HCl A.2 Blank, always begin with 10 ml aliquots. This applies specifically to blank samples.

11.3 Analysis. Calibrate the analytical equipment and develop a calibration curve as outlined in Section 10.0.

11.3.1 Mercury Samples. Then repeat the procedure used to establish the calibration curve with appropriately sized aliquots (1 to 10 ml) of the samples (from Sections 11.2.2 and 11.2.3) until two consecutive peak heights agree within 3 percent of their average value. If the 10 ml sample is below the detectable limit, use a larger aliquot (up to 20 ml), but decrease the volume of water added to the aeration cell accordingly to prevent the solution volume from exceeding the capacity of the aeration bottle. If the peak maximum of a 1.0 ml aliquot is off scale, further dilute the original sample to bring the Hg concentration into the calibration range of the spectrophotometer. If the Hg content of the absorbing solution and filter blank is below the working range of the analytical method, use zero for the blank.

11.3.2 Run a blank and standard at least after every five samples to check the spectrophotometer calibration; recalibrate as necessary.

11.3.3 Check for Matrix Effects (optional). Same as Method 101, Section 11.3.3.

12.0 Data Analysis and Calculations

NOTE: Carry out calculations, retaining at least one extra decimal significant figure beyond that of the acquired data. Round off figures only after the final calculation. Other forms of the equations may be used as long as they give equivalent results.

12.1 Nomenclature.

$C_{(fltr)Hg}$ = Total ng of Hg in aliquot of $KMnO_4$ filtrate and HNO_3 digestion of filter analyzed (aliquot of analysis Sample No. A.1).

$C_{(fltr\ blk)Hg}$ = Total ng of Hg in aliquot of $KMnO_4$ blank and HNO_3 digestion of blank filter analyzed (aliquot of analysis Sample No. A.1 blank).

$C_{(HC1\ blk)Hg}$ = Total ng of Hg analyzed in aliquot of the 500-ml analysis Sample No. HCl A.2 blank.

$C_{(HCl)Hg}$ = Total ng of Hg analyzed in the aliquot from the 500-ml analysis Sample No. HCl A.2.

DF = Dilution factor for the HCl-digested Hg-containing solution, Analysis Sample No. “HCl A.2.”

DF_{blk} = Dilution factor for the HCl-digested Hg containing solution, Analysis Sample No. “HCl A.2 blank.” (Refer to sample No. “HCl A.2” dilution factor above.)

$m_{(fltr)Hg}$ = Total blank corrected µg of Hg in $KMnO_4$ filtrate and HNO_3 digestion of filter sample.

$m_{(HCl)Hg}$ = Total blank corrected µg of Hg in HCl rinse and HCl digestate of filter sample.

m_{Hg} = Total blank corrected Hg content in each sample, µg.

S = Aliquot volume of sample added to aeration cell, ml.

S_{blk} = Aliquot volume of blank added to aeration cell, ml.

$Vf_{(blk)}$ = Solution volume of blank sample, 1000 ml for samples diluted as described in Section 11.2.2.

$V_{f(fltr)}$ = Solution volume of original sample, normally 1000 ml for samples diluted as described in Section 11.2.2.

$V_{f(HCl)}$ = Solution volume of original sample, 500 ml for samples diluted as described in Section 11.2.1.

10^{-3} = Conversion factor, µg/ng.

12.2 Average Dry Gas Meter Temperature and Average Orifice Pressure Drop, Dry Gas Volume, Volume of Water Vapor Condensed, Moisture Content, Isokinetic Variation, and Stack Gas Velocity and Volumetric Flow Rate. Same as Method 5, Sections 12.2 through 12.5, 12.11, and 12.12, respectively.

12.3 Total Mercury.

12.3.1 For each source sample, correct the average maximum absorbance of the two consecutive samples whose peak heights agree within 3 percent of their average for the contribution of the blank. Use the calibration curve and these corrected averages to determine the final total weight of Hg in ng in the aeration cell for each source sample.

12.3.2 Correct for any dilutions made to bring the sample into the working range of the spectrophotometer.

$$m_{(HCl)Hg} = \frac{\left[C_{(HCl)Hg} DF\right]}{S} - \frac{\left[C_{(HClblk)Hg} DF_{blk}\right]}{S_{blk}} Vf_{(HCl)} \left(10^{-3}\right) \qquad \text{Eq. 101A-1}$$

NOTE: This dilution factor applies only to the intermediate dilution steps, since the original sample volume [$(V_f)_{HCL}$] of "HCl A.2" has been factored out in the equation along with the sample aliquot (S). In Eq. 101A-1, the sample aliquot, S, is introduced directly into the aeration cell for analysis according to the procedure outlined in Section 11.3.1. A dilution factor is required only if it is necessary to bring the sample into the analytical instrument's calibration range.

NOTE: The maximum allowable blank subtraction for the HCl is the lesser of the two following values: (1) the actual blank measured value (analysis Sample No. HCl A.2 blank), or (2) 5% of the Hg content in the combined HCl rinse and digested sample (analysis Sample No. HCl A.2).

$$m_{(flr)Hg} = \frac{\left[C_{(flr)Hg} DF\, V_{f(flr)}\right]}{S} - \frac{\left[C_{(flrblk)Hg} DF_{blk}\, V_{f(blk)}\right]}{S_{blk}} \qquad \text{Eq. 101A-2}$$

NOTE: The maximum allowable blank subtraction for the HCl is the lesser of the two following values: (1) the actual blank measured value (analysis Sample No. "A.1 blank"), or (2) 5% of the Hg content in the filtrate (analysis Sample No. "A.1").

$$m_{Hg} = m_{(HCl)Hg} + m_{(flr)Hg} \qquad \text{Eq. 101A-3}$$

12.3 Mercury Emission Rate. Same as Method 101, Section 12.3.

12.4 Determination of Compliance. Same as Method 101, Section 12.4.

13.0 Method Performance

13.1 Precision. Based on eight paired-train tests, the intra-laboratory standard deviation was estimated to be 4.8 µg/ml in the concentration range of 50 to 130 µg/m ^{3} .

13.2 Bias. [Reserved]

13.3 Range. After initial dilution, the range of this method is 20 to 800 ng Hg/ml. The upper limit can be extended by further dilution of the sample.

14.0 Pollution Prevention [Reserved]

15.0 Waste Management [Reserved]

16.0 References

Same as Section 16.0 of Method 101, with the addition of the following:

1. Mitchell, W.J., *et al.* Test Methods to Determine the Mercury Emissions from Sludge Incineration Plants. U.S. Environmental Protection Agency. Research Triangle Park, NC. Publication No. EPA-600/4-79-058. September 1979.

2. Wilshire, Frank W., *et al.* Reliability Study of the U.S. EPA's Method 101A—Determination of Particulate and Gaseous Mercury Emissions. U.S. Environmental Protection Agency. Research Triangle Park, NC. Report No. 600/D-31/219 AREAL 367, NTIS Acc No. PB91-233361.

3. Memorandum from William J. Mitchell to Roger T. Shigehara discussing the potential safety hazard in Section 7.2 of Method 101A. February 28, 1990.

17.0 Tables, Diagrams, Flowcharts, And Validation Data [Reserved]

Method 102—Determination of Particulate and Gaseous Mercury Emissions From Chlor-Alkali Plants (Hydrogen Streams)

NOTE: This method does not include all of the specifications (*e.g.,* equipment and supplies) and procedures (*e.g.,* sampling and analytical) essential to its performance. Some material is incorporated by reference from other methods in this part and in appendix A to 40 CFR part 60. Therefore, to obtain reliable results, persons using this method should have a thorough knowledge of at least the following additional test methods: Method 1, Method 2, Method 3, Method 5, and Method 101.

1.0 Scope and Application

1.1 Analytes.

Analyte	**CAS No.**	**Sensitivity**
Mercury (Hg)	7439-97-6	Dependent upon recorder and spectrophotometer.

1.2 Applicability. This method is applicable for the determination of Hg emissions, including both particulate and gaseous Hg, from chlor-alkali plants and other sources (as specified in the regulations) where the carrier-gas stream in the duct or stack is principally hydrogen.

1.3 Data Quality Objectives. Adherence to the requirements of this method will enhance the quality of the data obtained from air pollutant sampling methods.

2.0 Summary of Method

2.1 Particulate and gaseous Hg emissions are withdrawn isokinetically from the source and collected in acidic iodine monochloride (ICl) solution. The Hg collected (in the mercuric form) is reduced to elemental Hg, which is then aerated from the solution into an optical cell and measured by atomic absorption spectrophotometry.

3.0 Definitions [Reserved]

4.0 Interferences

Same as Method 101, Section 4.2.

5.0 Safety

5.1 Disclaimer. This method may involve hazardous materials, operations, and equipment. This test method may not address all of the safety problems associated with its use. It is the responsibility of the user of this test method to establish appropriate safety and health practices and determine the applicability of regulatory limitations prior to performing this test method.

5.2 Corrosive Reagents. Same as Method 101, Section 5.2.

5.3 Explosive Mixtures. The sampler must conduct the source test under conditions of utmost safety because hydrogen and air mixtures are explosive. Since the sampling train essentially is leakless, attention to safe operation can be concentrated at the inlet and outlet. If a leak does occur, however, remove the meter box cover to avoid a possible explosive mixture. The following specific precautions are recommended:

5.3.1 Operate only the vacuum pump during the test. The other electrical equipment, *e.g.,* heaters, fans, and timers, normally are not essential to the success of a hydrogen stream test.

5.3.2 Seal the sample port to minimize leakage of hydrogen from the stack.

5.3.3 Vent sampled hydrogen at least 3 m (10 ft) away from the train. This can be accomplished by attaching a 13-mm (0.50-in.) ID Tygon tube to the exhaust from the orifice meter.

NOTE: A smaller ID tubing may cause the orifice meter calibration to be erroneous. Take care to ensure that the exhaust line is not bent or pinched.

6.0 Equipment and Supplies

Same as Method 101, Section 6.0, with the exception of the following:

6.1 Probe Heating System. Do not use, unless otherwise specified.

6.2 Glass Fiber Filter. Do not use, unless otherwise specified.

7.0 Reagents and Standards

Same as Method 101, Section 7.0.

8.0 Sample Collection, Preservation, Transport, and Storage

Same as Method 101, Section 8.0, with the exception of the following:

8.1 Setting of Isokinetic Rates.

8.1.1 If a nomograph is used, take special care in the calculation of the molecular weight of the stack gas and in the setting of the nomograph to maintain isokinetic conditions during sampling (Sections 8.1.1.1 through 8.1.1.3 below).

8.1.1.1 Calibrate the meter box orifice. Use the techniques described in APTD-0576 (see Reference 9 in Section 17.0 of Method 5). Calibration of the orifice meter at flow conditions that simulate the conditions at the source is suggested. Calibration should either be done with hydrogen or with some other gas having similar Reynolds Number so that there is similarity between the Reynolds Numbers during calibration and during sampling.

8.1.1.2 The nomograph described in APTD-0576 cannot be used to calculate the C factor because the nomograph is designed for use when the stack gas dry molecular weight is 29 ±4. Instead, the following calculation should be made to determine the proper C factor:

$$C = 0.00154 \Delta H @ C_p^{\,2} T_m \left(P_s / P_m \right) \frac{\left(1 - B_{ws}\right)^2}{\left(1 - B_{ws}\right) + 18 B_{ws}} \qquad \text{Eq. 102-1}$$

Where:

B_{ws} = Fraction by volume of water vapor in the stack gas.

C_p = Pitot tube calibration coefficient, dimensionless.

M_d = Dry molecular weight of stack gas, lb/lb-mole.

P_s = Absolute pressure of stack gas, in. Hg.

P_m = Absolute pressure of gas at the meter, in. Hg.

T_m = Absolute temperature of gas at the orifice, °R.

$\Delta H_@$ = Meter box calibration factor obtained in Section 8.1.1.1, in. H_2 O.

0.00154 = (in. H_2 O/°R).

NOTE: This calculation is left in English units, and is not converted to metric units because nomographs are based on English units.

8.1.1.3 Set the calculated C factor on the operating nomograph, and select the proper nozzle diameter and K factor as specified in APTD-0576. If the C factor obtained in Section 8.1.1.2 exceeds the values specified on the existing operating nomograph, expand the C scale logarithmically so that the values can be properly located.

8.1.2 If a calculator is used to set isokinetic rates, it is suggested that the isokinetic equation presented in Reference 13 in Section 17.0 of Method 101 be consulted.

8.2 Sampling in Small (<12-in. Diameter) Stacks. When the stack diameter (or equivalent diameter) is less than 12 inches, conventional pitot tube-probe assemblies should not be used. For sampling guidelines, see Reference 14 in Section 17.0 of Method 101.

9.0 Quality Control

Same as Method 101, Section 9.0.

10.0 Calibration and Standardizations

Same as Method 101, Section 10.0.

11.0 Analytical Procedure

Same as Method 101, Section 11.0.

12.0 Data Analysis and Calculations

Same as Method 101, Section 12.0.

13.0 Method Performance

Same as Method 101, Section 13.0.

13.1 Analytical Range. After initial dilution, the range of this method is 0.5 to 120 µg Hg/ml. The upper limit can be extended by further dilution of the sample.

14.0 Pollution Prevention. [Reserved]

15.0 Waste Management. [Reserved]

16.0 References

Same as Method 101, Section 16.0.

17.0 Tables, Diagrams, Flowcharts, and Validation Data. [Reserved]

Method 103—Beryllium Screening Method

1.0 Scope and Application

1.1 Analytes.

Analyte	**CAS No.**	**Sensitivity**
Beryllium (Be)	7440-41-7	Dependent upon analytical procedure used.

1.2 Applicability. This procedure details guidelines and requirements for methods acceptable for use in determining Be emissions in ducts or stacks at stationary sources.

1.3 Data Quality Objectives. Adherence to the requirements of this method will enhance the quality of the data obtained from air pollutant sampling methods.

2.0 Summary of Method

2.1 Particulate Be emissions are withdrawn isokinetically from three points in a duct or stack and are collected on a filter. The collected sample is analyzed for Be using an appropriate technique.

3.0 Definitions. [Reserved]

4.0 Interferences. [Reserved]

5.0 Safety

5.1 Disclaimer. This method may involve hazardous materials, operations, and equipment. This test method may not address all of the safety problems associated with its use. It is the responsibility of the user of this test method to establish appropriate safety and health practices and determine the applicability of regulatory limitations prior to performing this test method.

5.2 Hydrochloric Acid (HCl). Highly corrosive and toxic. Vapors are highly irritating to eyes, skin, nose, and lungs, causing severe damage. May cause bronchitis, pneumonia, or edema of lungs. Exposure to concentrations of 0.13 to 0.2 percent can be lethal to humans in a few minutes. Provide ventilation to limit exposure. Reacts with metals, producing hydrogen gas. Personal protective equipment and safe procedures are useful in preventing chemical splashes. If contact occurs, immediately flush with copious amounts of water at least 15 minutes. Remove clothing under shower and decontaminate. Treat residual chemical burn as thermal burn.

6.0 Equipment and Supplies

6.1 Sample Collection. A schematic of the required sampling train configuration is shown in Figure 103-1 in Section 17.0. The essential components of the train are as follows:

6.1.1 Nozzle. Stainless steel, or equivalent, with sharp, tapered leading edge.

6.1.2 Probe. Sheathed borosilicate or quartz glass tubing.

6.1.3 Filter. Millipore AA, or equivalent, with appropriate filter holder that provides a positive seal against leakage from outside or around the filter. It is suggested that a Whatman 41, or equivalent, be placed immediately against the back side of the Millipore filter as a guard against breakage of the Millipore. Include the backup filter in the analysis. To be equivalent, other filters shall exhibit at least 99.95 percent efficiency (0.05 percent penetration) on 0.3 micron dioctyl phthalate smoke particles, and be amenable to the Be analysis procedure. The filter efficiency tests shall be conducted in accordance with ASTM D 2986-71, 78, 95a (incorporated by reference—see § 61.18). Test data from the supplier's quality control program are sufficient for this purpose.

6.1.4 Meter-Pump System. Any system that will maintain isokinetic sampling rate, determine sample volume, and is capable of a sampling rate of greater than 14 lpm (0.5 cfm).

6.2 Measurement of Stack Conditions. The following equipment is used to measure stack conditions:

6.2.1 Pitot Tube. Type S, or equivalent, with a constant coefficient (±5 percent) over the working range.

6.2.2 Inclined Manometer, or Equivalent. To measure velocity head to ±10 percent of the minimum value.

6.2.3 Temperature Measuring Device. To measure stack temperature to ±1.5 percent of the minimum absolute stack temperature.

6.2.4 Pressure Measuring Device. To measure stack pressure to ±2.5 mm Hg (0.1 in. Hg).

6.2.5 Barometer. To measure atmospheric pressure to ±2.5 mm Hg (0.1 in. Hg).

6.2.6 Wet and Dry Bulb Thermometers, Drying Tubes, Condensers, or Equivalent. To determine stack gas moisture content to ±1 percent.

6.3 Sample Recovery.

6.3.1 Probe Cleaning Equipment. Probe brush or cleaning rod at least as long as probe, or equivalent. Clean cotton balls, or equivalent, should be used with the rod.

6.3.2 Leakless Glass Sample Bottles. To contain sample.

6.4 Analysis. All equipment necessary to perform an atomic absorption, spectrographic, fluorometric, chromatographic, or equivalent analysis.

7.0 Reagents and Standards

7.1 Sample Recovery.

7.1.1 Water. Deionized distilled, to conform to ASTM D 1193-77, 91 (incorporated by reference—see § 61.18), Type 3.

7.1.2 Acetone. Reagent grade.

7.1.3 Wash Acid, 50 Percent (V/V) Hydrochloric Acid (HCl). Mix equal volumes of concentrated HCl and water, being careful to add the acid slowly to the water.

7.2 Analysis. Reagents and standards as necessary for the selected analytical procedure.

8.0 Sample Collection, Preservation, Transport, and Storage

Guidelines for source testing are detailed in the following sections. These guidelines are generally applicable; however, most sample sites differ to some degree and temporary alterations such as stack extensions or expansions often are required to insure the best possible sample site. Further, since Be is hazardous, care should be taken to minimize exposure. Finally, since the total quantity of Be to be collected is quite small, the test must be carefully conducted to prevent contamination or loss of sample.

8.1 Selection of a Sampling Site and Number of Sample Runs. Select a suitable sample site that is as close as practicable to the point of atmospheric emission. If possible, stacks smaller than one foot in diameter should not be sampled.

8.1.1 Ideal Sampling Site. The ideal sampling site is at least eight stack or duct diameters downstream and two diameters upstream from any flow disturbance such as a bend, expansion or contraction. For rectangular cross sections, use Equation 103-1 in Section 12.2 to determine an equivalent diameter, D_e .

8.1.2 Alternate Sampling Site. Some sampling situations may render the above sampling site criteria impractical. In such cases, select an alternate site no less than two diameters downstream and one-half diameter upstream from any point of flow disturbance. Additional sample runs are recommended at any sample site not meeting the criteria of Section 8.1.1.

8.1.3 Number of Sample Runs Per Test. Three sample runs constitute a test. Conduct each run at one of three different points. Select three points that proportionately divide the diameter, or are located at 25, 50, and 75 percent of the diameter from the inside wall. For horizontal ducts, sample on a vertical line through the centroid. For rectangular ducts, sample on a line through the centroid and parallel to a side. If additional sample runs are performed per Section 8.1.2, proportionately divide the duct to accommodate the total number of runs.

8.2 Measurement of Stack Conditions. Using the equipment described in Section 6.2, measure the stack gas pressure, moisture, and temperature to determine the molecular weight of the stack gas. Sound engineering estimates may be made in lieu of direct measurements. Describe the basis for such estimates in the test report.

8.3 Preparation of Sampling Train.

8.3.1 Assemble the sampling train as shown in Figure 103-1. It is recommended that all glassware be precleaned by soaking in wash acid for two hours.

8.3.2 Leak check the sampling train at the sampling site. The leakage rate should not be in excess of 1 percent of the desired sample rate.

8.4 Sampling Train Operation.

8.4.1 For each run, measure the velocity at the selected sampling point. Determine the isokinetic sampling rate. Record the velocity head and the required sampling rate. Place the nozzle at the sampling point with the tip pointing directly into the gas stream. Immediately start the pump and adjust the flow to isokinetic conditions. At the conclusion of the test, record the sampling rate. Again measure the velocity head at the sampling point. The required isokinetic rate at the end of the period should not have deviated more than 20 percent from that originally calculated. Describe the reason for any deviation beyond 20 percent in the test report.

8.4.2 Sample at a minimum rate of 14 liters/min (0.5 cfm). Obtain samples over such a period or periods of time as are necessary to determine the maximum emissions which would occur in a 24-hour period. In the case of cyclic operations, perform sufficient sample runs so as to allow determination or calculation of the emissions that occur over the duration of the cycle. A minimum sampling time of two hours per run is recommended.

8.5 Sample Recovery.

8.5.1 It is recommended that all glassware be precleaned as in Section 8.3. Sample recovery should also be performed in an area free of possible Be contamination. When the sampling train is moved, exercise care to prevent breakage and contamination. Set aside a portion of the acetone used in the sample recovery as a blank for analysis. The total amount of acetone used should be measured for accurate blank correction. Blanks can be eliminated if prior analysis shows negligible amounts.

8.5.2 Remove the filter (and backup filter, if used) and any loose particulate matter from filter holder, and place in a container.

8.5.3 Clean the probe with acetone and a brush or long rod and cotton balls. Wash into the container with the filter. Wash out the filter holder with acetone, and add to the same container.

9.0 Quality Control. [Reserved]

10.0 Calibration and Standardization

10.1 Sampling Train. As a procedural check, compare the sampling rate regulation with a dry gas meter, spirometer, rotameter (calibrated for prevailing atmospheric conditions), or equivalent, attached to the nozzle inlet of the complete sampling train.

10.2 Analysis. Perform the analysis standardization as suggested by the manufacturer of the instrument, or the procedures for the analytical method in use.

11.0 Analytical Procedure

Make the necessary preparation of samples and analyze for Be. Any currently acceptable method (e.g., atomic absorption, spectrographic, fluorometric, chromatographic) may be used.

12.0 Data Analysis and Calculations

12.1 Nomenclature.

A_s (avg) = Stack area, m^2 (ft^2).

L = Length.

R = Be emission rate, g/day.

V_s (avg) = Average stack gas velocity, m/sec (ft/sec).

V_{total} = Total volume of gas sampled, m^3 (ft^3).

W = Width.

W_t = Total weight of Be collected, mg.

10^{-6} = Conversion factor, g/µg.

86,400 = Conversion factor, sec/day.

12.2 Calculate the equivalent diameter, De, for a rectangular cross section as follows:

$$D_e = \frac{2 \cdot L \cdot W}{L + W} \qquad \text{Eq. 103-1}$$

12.3 Calculate the Be emission rate, R, in g/day for each stack using Equation 103-2. For cyclic operations, use only the time per day each stack is in operation. The total Be emission rate from a source is the summation of results from all stacks.

$$R = \frac{W_t V_{s(avg)} A_s (86,400)(10^{-6})}{V_{total}} \qquad \text{Eq. 103-2}$$

12.4 Test Report. Prepare a test report that includes as a minimum: A detailed description of the sampling train used, results of the procedural check described in Section 10.1 with all data and calculations made, all pertinent data taken during the test, the basis for any estimates made, isokinetic sampling calculations, and emission results. Include a description of the test site, with a block diagram and brief description of the process, location of the sample points in the stack cross section, and stack dimensions and distances from any point of disturbance.

13.0 Method Performance. [Reserved]

14.0 Pollution Prevention. [Reserved]

15.0 Waste Management. [Reserved]

16.0 References. [Reserved]

17.0 Tables, Diagrams, Flow Charts, and Validation Data

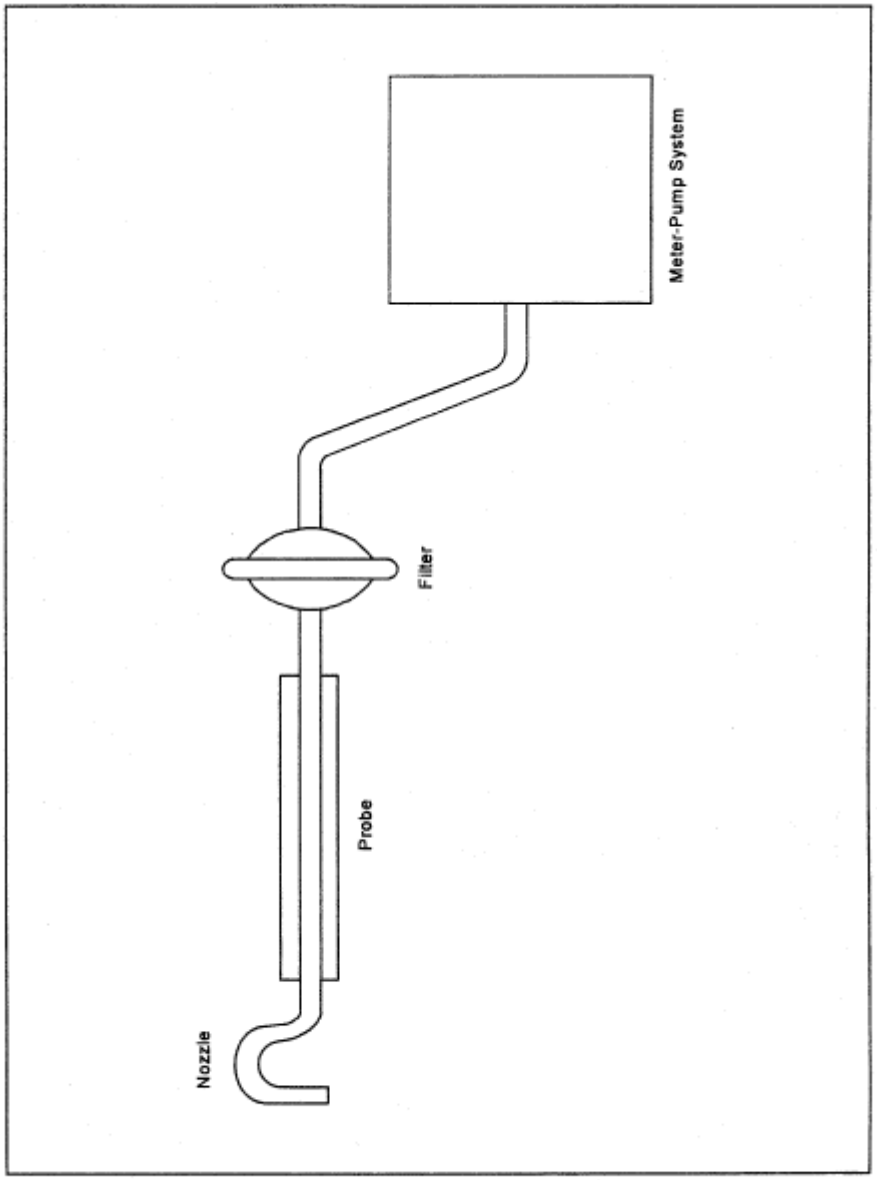

Figure 103-1. Beryllium Screening Method Sampling Train Schematic.

Method 104—Determination of Beryllium Emissions From Stationary Sources

NOTE: This method does not include all of the specifications (*e.g.,* equipment and supplies) and procedures (*e.g.,* sampling and analytical) essential to its performance. Some material is incorporated by reference from methods in appendix A to 40 CFR part 60. Therefore, to obtain reliable results, persons using this method should have a thorough knowledge of at least the following additional test methods: Method 1, Method 2, Method 3, and Method 5 in appendix A, part 60.

1.0 Scope and Application

1.1 Analytes.

Analyte	CAS No.	Sensitivity
Beryllium (Be)	7440-41-7	Dependent upon recorder and spectrophotometer.

1.2 Applicability. This method is applicable for the determination of Be emissions in ducts or stacks at stationary sources. Unless otherwise specified, this method is not intended to apply to gas streams other than those emitted directly to the atmosphere without further processing.

1.3 Data Quality Objectives. Adherences to the requirements of this method will enhance the quality of the data obtained from air pollutant sampling methods.

2.0 Summary of Method

2.1 Particulate and gaseous Be emissions are withdrawn isokinetically from the source and are collected on a glass fiber filter and in water. The collected sample is digested in an acid solution and is analyzed by atomic absorption spectrophotometry.

3.0 Definitions [Reserved]

4.0 Interferences

4.1 Matrix Effects. Analysis for Be by flame atomic absorption spectrophotometry is sensitive to the chemical composition and to the physical properties (*e.g.,* viscosity, pH) of the sample. Aluminum and silicon in particular are known to interfere when present in appreciable quantities. The analytical procedure includes (optionally) the use of the Method of Standard Additions to check for these matrix effects, and sample analysis using the Method of Standard Additions if significant matrix effects are found to be present (see Reference 2 in Section 16.0).

5.0 Safety

5.1 Disclaimer. This method may involve hazardous materials, operations, and equipment. This test method may not address all of the safety problems associated with its use. It is the responsibility of the user of this test method to establish appropriate safety and health practices and determine the applicability of regulatory limitations prior to performing this test method.

5.2 Corrosive reagents. The following reagents are hazardous. Personal protective equipment and safe procedures are useful in preventing chemical splashes. If contact occurs, immediately flush with copious amounts of water at least 15 minutes. Remove clothing under shower and decontaminate. Treat residual chemical burn as thermal burn.

5.2.1 Hydrochloric Acid (HC_l). Highly toxic. Vapors are highly irritating to eyes, skin, nose, and lungs, causing severe damage. May cause bronchitis, pneumonia, or edema of lungs. Exposure to concentrations of 0.13 to 0.2 percent can be lethal to humans in a few minutes. Provide ventilation to limit exposure. Reacts with metals, producing hydrogen gas.

5.2.2 Hydrogen Peroxide ($H_2 O_2$). Irritating to eyes, skin, nose, and lungs.

5.2.3 Nitric Acid (HNO_3). Highly corrosive to eyes, skin, nose, and lungs. Vapors cause bronchitis, pneumonia, or edema of lungs. Reaction to inhalation may be delayed as long as 30 hours and still be fatal. Provide ventilation to limit exposure. Strong oxidizer. Hazardous reaction may occur with organic materials such as solvents.

5.2.4 Sodium Hydroxide (NaOH). Causes severe damage to eyes and skin. Inhalation causes irritation to nose, throat, and lungs. Reacts exothermically with limited amounts of water.

5.3 Beryllium is hazardous, and precautions should be taken to minimize exposure.

6.0 Equipment and Supplies

6.1 Sample Collection. Same as Method 5, Section 6.1, with the exception of the following:

6.1.1 Sampling Train. Same as Method 5, Section 6.1.1, with the exception of the following:

6.1.2 Probe Liner. Borosilicate or quartz glass tubing. A heating system capable of maintaining a gas temperature of 120 ±14 °C (248 ±25 °F) at the probe exit during sampling to prevent water condensation may be used.

NOTE: Do not use metal probe liners.

6.1.3 Filter Holder. Borosilicate glass, with a glass frit filter support and a silicone rubber gasket. Other materials of construction (*e.g.,* stainless steel, Teflon, Viton) may be used, subject to the approval of the Administrator. The holder design shall provide a positive seal against leakage from the outside or around the filter. The holder shall be attached immediately at the outlet of the probe. A heating system capable of maintaining the filter at a minimum temperature in the range of the stack temperature may be used to prevent condensation from occurring.

6.1.4 Impingers. Four Greenburg-Smith impingers connected in series with leak-free ground glass fittings or any similar leak-free noncontaminating fittings. For the first, third, and fourth impingers, use impingers that are modified by replacing the tip with a 13 mm-ID (0.5 in.) glass tube extending to 13 mm (0.5 in.) from the bottom of the flask may be used.

6.2 Sample Recovery. The following items are needed for sample recovery:

6.2.1 Probe Cleaning Rod. At least as long as probe.

6.2.2 Glass Sample Bottles. Leakless, with Teflon-lined caps, 1000 ml.

6.2.3 Petri Dishes. For filter samples, glass or polyethylene, unless otherwise specified by the Administrator.

6.2.4 Graduated Cylinder. 250 ml.

6.2.5 Funnel and Rubber Policeman. To aid in transfer of silica gel to container; not necessary if silica gel is weighed in the field.

6.2.6 Funnel. Glass, to aid in sample recovery.

6.2.7 Plastic Jar. Approximately 300 ml.

6.3 Analysis. The following items are needed for sample analysis:

6.3.1 Atomic Absorption Spectrophotometer. Perkin-Elmer 303, or equivalent, with nitrous oxide/acetylene burner.

6.3.2 Hot Plate.

6.3.3 Perchloric Acid Fume Hood.

7.0 Reagents and Standards

NOTE: Unless otherwise indicated, it is intended that all reagents conform to the specifications established by the Committee on Analytical Reagents of the American Chemical Society, where such specifications are available; otherwise, use the best available grade.

7.1 Sample Collection. Same as Method 5, Section 7.1, including deionized distilled water conforming to ASTM D 1193-77 or 91 (incorporated by reference—see § 61.18), Type 3. The Millipore AA filter is recommended.

7.2 Sample Recovery. Same as Method 5 in appendix A, part 60, Section 7.2, with the addition of the following:

7.2.1 Wash Acid, 50 Percent (V/V) Hydrochloric Acid (HCl). Mix equal volumes of concentrated HCl and water, being careful to add the acid slowly to the water.

7.3 Sample Preparation and Analysis. The following reagents and standards and standards are needed for sample preparation and analysis:

7.3.1 Water. Same as in Section 7.1.

7.3.2. Perchloric Acid ($HClO_4$). Concentrated (70 percent V/V).

7.3.3 Nitric Acid (HNO_3). Concentrated.

7.3.4 Beryllium Powder. Minimum purity 98 percent.

7.3.5 Sulfuric Acid (H_2 SO_4) Solution, 12 N. Dilute 33 ml of concentrated H_2 SO_4 to 1 liter with water.

7.3.6 Hydrochloric Acid Solution, 25 Percent HCl (V/V).

7.3.7 Stock Beryllium Standard Solution, 10 µg Be/ml. Dissolve 10.0 mg of Be in 80 ml of 12 N H_2 SO_4 in a 1000-ml volumetric flask. Dilute to volume with water. This solution is stable for at least one month. Equivalent strength Be stock solutions may be prepared from Be salts such as $BeCl_2$ and $Be(NO_3)_2$ (98 percent minimum purity).

7.3.8 Working Beryllium Standard Solution, 1 µg Be/ml. Dilute a 10 ml aliquot of the stock beryllium standard solution to 100 ml with 25 percent HCl solution to give a concentration of 1 mg/ml. Prepare this dilute stock solution fresh daily.

8.0 Sample Collection, Preservation, Transport, and Storage

The amount of Be that is collected is generally small, therefore, it is necessary to exercise particular care to prevent contamination or loss of sample.

8.1 Pretest Preparation. Same as Method 5, Section 8.1, except omit Section 8.1.3.

8.2 Preliminary Determinations. Same as Method 5, Section 8.2, with the exception of the following:

8.2.1 Select a nozzle size based on the range of velocity heads to assure that it is not necessary to change the nozzle size in order to maintain isokinetic sampling rates below 28 liters/min (1.0 cfm).

8.2.2 Obtain samples over a period or periods of time that accurately determine the maximum emissions that occur in a 24-hour period. In the case of cyclic operations, perform sufficient sample runs for the accurate determination of the emissions that occur over the duration of the cycle. A minimum sample time of 2 hours per run is recommended.

8.3 Preparation of Sampling Train. Same as Method 5, Section 8.3, with the exception of the following:

8.3.1 Prior to assembly, clean all glassware (probe, impingers, and connectors) by first soaking in wash acid for 2 hours, followed by rinsing with water.

8.3.2 Save a portion of the water for a blank analysis.

8.3.3 Procedures relating to the use of metal probe liners are not applicable.

8.3.4 Probe and filter heating systems are needed only if water condensation is a problem. If this is the case, adjust the heaters to provide a temperature at or above the stack temperature. However, membrane filters such as the Millipore AA are limited to about 107 °C (225 °F). If the stack gas is in excess of about 93 °C (200 °F), consideration should be given to an alternate procedure such as moving the filter holder downstream of the first impinger to insure that the filter does not exceed its temperature limit. After the sampling train has been assembled, turn on and set the probe heating system, if applicable, at the desired operating temperature. Allow time for the temperatures to stabilize. Place crushed ice around the impingers.

NOTE: An empty impinger may be inserted between the third impinger and the silica gel to remove excess moisture from the sample stream.

8.4 Leak Check Procedures, Sampling Train Operation, and Calculation of Percent Isokinetic. Same as Method 5, Sections 8.4, 8.5, and 8.6, respectively.

8.5 Sample Recovery. Same as Method 5, Section 8.7, except treat the sample as follows: Transfer the probe and impinger assembly to a cleanup area that is clean, protected from the wind, and free of Be contamination. Inspect the train before and during this assembly, and note any abnormal conditions. Treat the sample as follows: Disconnect the probe from the impinger train.

8.5.1 Container No. 1. Same as Method 5, Section 8.7.6.1.

8.5.2 Container No. 2. Place the contents (measured to 1 ml) of the first three impingers into a glass sample bottle. Use the procedures outlined in Section 8.7.6.2 of Method 5, where applicable, to rinse the probe nozzle, probe fitting, probe liner, filter holder, and all glassware between the filter holder and the back half of the third impinger with water. Repeat this procedure with acetone. Place both water and acetone rinse solutions in the sample bottle with the contents of the impingers.

8.5.3 Container No. 3. Same as Method 5, Section 8.7.6.3.

8.6 Blanks.

8.6.1 Water Blank. Save a portion of the water as a blank. Take 200 ml directly from the wash bottle being used and place it in a plastic sample container labeled “H_2O blank.”

8.6.2 Filter. Save two filters from each lot of filters used in sampling. Place these filters in a container labeled “filter blank.”

8.7 Post-test Glassware Rinsing. If an additional test is desired, the glassware can be carefully double rinsed with water and reassembled. However, if the glassware is out of use more than 2 days, repeat the initial acid wash procedure.

9.0 Quality Control

Section	Quality control measure	Effect
8.4, 10.1	Sampling equipment leak checks and calibration	Ensure accuracy and precision of sampling measurements.
10.2	Spectrophotometer calibration	Ensure linearity of spectrophotometer response to standards.
11.5	Check for matrix effects	Eliminate matrix effects.

10.0 Calibration and Standardization

NOTE: Maintain a laboratory log of all calibrations.

10.1 Sampling Equipment. Same as Method 5, Section 10.0.

10.2 Preparation of Standard Solutions. Pipet 1, 3, 5, 8, and 10 ml of the 1.0 µg Be/ml working standard solution into separate 100 ml volumetric flasks, and dilute to the mark with water. The total amounts of Be in these standards are 1, 3, 5, 8, and 10 µg, respectively.

10.3 Spectrophotometer and Recorder. The Be response may be measured by either peak height or peak area. Analyze an aliquot of the 10-µg standard at 234.8 nm using a nitrous oxide/acetylene flame. Determine the maximum absorbance of the standard, and set this value to read 90 percent of the recorder full scale.

10.4 Calibration Curve.

10.4.1 After setting the recorder scale, analyze an appropriately sized aliquot of each standard and the BLANK (see Section 11) until two consecutive peaks agree within 3 percent of their average value.

10.4.3 Subtract the average peak height (or peak area) of the blank—which must be less than 2 percent of recorder full scale—from the averaged peak heights of the standards. If the blank absorbance is greater than 2 percent of full-scale, the probable cause is Be contamination of a reagent or carry-over of Be from a previous sample. Prepare the calibration curve by plotting the corrected peak height of each standard solution versus the corresponding total Be weight in the standard (in µg).

10.5 Spectrophotometer Calibration Quality Control. Calculate the least squares slope of the calibration curve. The line must pass through the origin or through a point no further from the origin than ±2 percent of the recorder full scale. Multiply the corrected peak height by the reciprocal of the least squares slope to determine the distance each calibration point lies from the theoretical calibration line. The difference between the calculated concentration values and the actual concentrations (i.e., 1, 3, 5, 8, and 10 µg Be) must be less than 7 percent for all standards.

11.0 Analytical Procedure

11.1 Sample Loss Check. Prior to analysis, check the liquid level in Container No. 2. Note on the analytical data sheet whether leakage occurred during transport. If a noticeable amount of leakage occurred, either void the sample or take steps, subject to the approval of the Administrator, to adjust the final results.

11.2 Glassware Cleaning. Before use, clean all glassware according to the procedure of Section 8.3.1.

11.3 Sample Preparation. The digestion of Be samples is accomplished in part in concentrated $HClO_4$.

NOTE: The sample must be heated to light brown fumes after the initial HNO3 addition; otherwise, dangerous perchlorates may result from the subsequent $HClO_4$ digestion. $HClO_4$ should be used only under a hood.

11.3.1 Container No. 1. Transfer the filter and any loose particulate matter from Container No. 1 to a 150-ml beaker. Add 35 ml concentrated HNO_3 . To oxidize all organic matter, heat on a hotplate until light brown fumes are evident. Cool to room temperature, and add 5 ml 12 N H_2 SO_4 and 5 ml concentrated $HClO_4$.

11.3.2 Container No. 2. Place a portion of the water and acetone sample into a 150 ml beaker, and put on a hotplate. Add portions of the remainder as evaporation proceeds and evaporate to dryness. Cool the residue, and add 35 ml concentrated HNO_3 . To oxidize all organic matter, heat on a hotplate until light brown fumes are evident. Cool to room temperature, and add 5 ml 12 N H_2 SO_4 and 5 ml concentrated $HClO_4$. Then proceed with step 11.3.4.

11.3.3 Final Sample Preparation. Add the sample from Section 11.3.2 to the 150-ml beaker from Section 11.3.1. Replace on a hotplate, and evaporate to dryness in a $HClO_4$ hood. Cool the residue to room temperature, add 10.0 ml of 25 percent V/V HCl, and mix to dissolve the residue.

11.3.4 Filter and Water Blanks. Cut each filter into strips, and treat each filter individually as directed in Section 11.3.1. Treat the 200-ml water blank as directed in Section 11.3.2. Combine and treat these blanks as directed in Section 11.3.3.

11.4 Spectrophotometer Preparation. Turn on the power; set the wavelength, slit width, and lamp current; and adjust the background corrector as instructed by the manufacturer's manual for the particular atomic absorption spectrophotometer. Adjust the burner and flame characteristics as necessary.

11.5 Analysis. Calibrate the analytical equipment and develop a calibration curve as outlined in Sections 10.4 and 10.5.

11.5.1 Beryllium Samples. Repeat the procedure used to establish the calibration curve with an appropriately sized aliquot of each sample (from Section 11.3.3) until two consecutive peak heights agree within 3 percent of their average value. The peak height of each sample must be greater than 10 percent of the recorder full scale. If the peak height of the sample is off scale on the recorder, further dilute the original source sample to bring the Be concentration into the calibration range of the spectrophotometer.

11.5.2 Run a blank and standard at least after every five samples to check the spectrophotometer calibration. The peak height of the blank must pass through a point no further from the origin than ±2 percent of the recorder full scale. The difference between the measured concentration of the standard (the product of the corrected peak height and the reciprocal of the least squares slope) and the actual concentration of the standard must be less than 7 percent, or recalibration of the analyzer is required.

11.5.3 Check for Matrix Effects (optional). Use the Method of Standard Additions (see Reference 2 in Section 16.0) to check at least one sample from each source for matrix effects on the Be results. If the results of the Method of Standard Additions procedure used on the single source sample do not agree to within 5 percent of the value obtained by the routine atomic absorption analysis, then reanalyze all samples from the source using the Method of Standard Additions procedure.

11.6 Container No. 2 (Silica Gel). Weigh the spent silica gel (or silica gel plus impinger) to the nearest 0.5 g using a balance. (This step may be conducted in the field.)

12.0 Data Analysis and Calculations

Carry out calculations, retaining at least one extra decimal significant figure beyond that of the acquired data. Round off figures only after the final calculation. Other forms of the equations may be used as long as they give equivalent results.

12.1 Nomenclature.

K_1 = 0.3858 °K/mm Hg for metric units.

= 17.64 °R/in. Hg for English units.

$K_3 = 10^{-6}$ g/µg for metric units.

$= 2.2046 \times 10^{-9}$ lb/µg for English units.

m_{Be} = Total weight of beryllium in the source sample.

P_s = Absolute stack gas pressure, mm Hg (in. Hg).

t = Daily operating time, sec/day.

T_s = Absolute average stack gas temperature, °K (°R).

$V_{m(std)}$ = Dry gas sample volume at standard conditions, scm (scf).

$V_{w(std)}$ = Volume of water vapor at standard conditions, scm (scf).

12.2 Average Dry Gas Meter Temperature and Average Orifice Pressure Drop, Dry Gas Volume, Volume of Water Vapor Condensed, Moisture Content, Isokinetic Variation, and Stack Gas Velocity and Volumetric Flow Rate. Same as Method 5, Sections 12.2 through 12.5, 12.11, and 12.12, respectively.

12.3 Total Beryllium. For each source sample, correct the average maximum absorbance of the two consecutive samples whose peak heights agree within 3 percent of their average for the contribution of the solution blank (see Sections 11.3.4 and 11.5.2). Correcting for any dilutions if necessary, use the calibration curve and these corrected averages to determine the total weight of Be in each source sample.

12.4 Beryllium Emission Rate. Calculate the daily Hg emission rate, R, using Equation 104-1. For continuous operations, the operating time is equal to 86,400 seconds per day. For cyclic operations, use only the time per day each stack is in operation. The total Hg emission rate from a source will be the summation of results from all stacks.

$$\bar{C}_m = \sum_{i=1}^{n} \left[\frac{mV_s}{V_a \left(W_\beta - W_f \right)} \right]_i \qquad \text{Eq. 105-1}$$

12.5 Determination of Compliance. Each performance test consists of three sample runs. For the purpose of determining compliance with an applicable national emission standard, use the average of the results of all sample runs.

13.0 Method Performance. [Reserved]

14.0 Pollution Prevention. [Reserved]

15.0 Waste Management. [Reserved]

16.0 References

Same as References 1, 2, and 4-11 of Section 16.0 of Method 101 with the addition of the following:

1. Amos, M.D., and J.B. Willis. Use of High-Temperature Pre-Mixed Flames in Atomic Absorption Spectroscopy. Spectrochim. Acta. 22:1325. 1966.

2. Fleet, B., K.V. Liberty, and T. S. West. A Study of Some Matrix Effects in the Determination of Beryllium by Atomic Absorption Spectroscopy in the Nitrous Oxide-Acetylene Flame. Talanta 17:203. 1970.

17.0 Tables, Diagrams, Flowcharts, And Validation Data [Reserved]

Method 105—Determination of Mercury in Wastewater Treatment Plant Sewage Sludges

NOTE: This method does not include all of the specifications (*e.g.,* equipment and supplies) and procedures (*e.g.,* sampling and analytical) essential to its performance. Some material is incorporated by reference from other methods in this part. Therefore, to obtain reliable results, persons using this method should also have a thorough knowledge of at least the following additional test methods: Method 101 and Method 101A.

1.0 Scope and Application

1.1 Analytes.

Analyte	CAS No.	Sensitivity
Mercury (Hg)	7439-97-6	Dependent upon spectrophotometer and recorder.

1.2 Applicability. This method is applicable for the determination of total organic and inorganic Hg content in sewage sludges.

1.3 Data Quality Objectives. Adherence to the requirements of this method will enhance the quality of the data obtained from air pollutant sampling methods.

2.0 Summary of Method

2.1 Time-composite sludge samples are withdrawn from the conveyor belt subsequent to dewatering and before incineration or drying. A weighed portion of the sludge is digested in aqua regia and is oxidized by potassium permanganate ($KMnO_4$). Mercury in the digested sample is then measured by the conventional spectrophotometric cold-vapor technique.

3.0 Definitions [Reserved]

4.0 Interferences [Reserved]

5.0 Safety

5.1 Disclaimer. This method may involve hazardous materials, operations, and equipment. This test method may not address all of the safety problems associated with its use. It is the responsibility of the user of this test method to establish appropriate safety and health practices and determine the applicability of regulatory limitations prior to performing this test method.

5.2 Corrosive Reagents. The following reagents are hazardous. Personal protective equipment and safe procedures are useful in preventing chemical splashes. If contact occurs, immediately flush with copious amounts of water at least 15 minutes. Remove clothing under shower and decontaminate. Treat residual chemical burn as thermal burn.

5.2.1 Hydrochloric Acid (HCl). Highly toxic. Vapors are highly irritating to eyes, skin, nose, and lungs, causing severe damage. May cause bronchitis, pneumonia, or edema of lungs. Exposure to concentrations of 0.13 to 0.2 percent can be lethal to humans in a few minutes. Provide ventilation to limit exposure. Reacts with metals, producing hydrogen gas.

5.2.2 Nitric Acid (HNO_3). Highly corrosive to eyes, skin, nose, and lungs. Vapors cause bronchitis, pneumonia, or edema of lungs. Reaction to inhalation may be delayed as long as 30 hours and still be fatal. Provide ventilation to limit exposure. Strong oxidizer. Hazardous reaction may occur with organic materials such as solvents.

6.0 Equipment and Supplies

6.1 Sample Collection and Mixing. The following items are required for collection and mixing of the sludge samples:

6.1.1 Container. Plastic, 50-liter.

6.1.2 Scoop. To remove 950-ml (1 quart.) sludge sample.

6.1.3 Mixer. Mortar mixer, wheelbarrow-type, 57-liter (or equivalent) with electricity-driven motor.

6.1.4 Blender. Waring-type, 2-liter.

6.1.5 Scoop. To remove 100-ml and 20-ml samples of blended sludge.

6.1.6 Erlenmeyer Flasks. Four, 125-ml.

6.1.7 Beakers. Glass beakers in the following sizes: 50 ml (1), 200 ml (1), 400 ml (2).

6.2 Sample Preparation and Analysis. Same as Method 101, Section 6.3, with the addition of the following:

6.2.1 Hot Plate.

6.2.2 Desiccator.

6.2.3 Filter Paper. S and S No. 588 (or equivalent).

6.2.4 Beakers. Glass beakers, 200 ml and 400 ml (2 each).

7.0 Reagents and Standards

NOTE: Unless otherwise indicated, it is intended that all reagents conform to the specifications established by the Committee on Analytical Reagents of the American Chemical Society, where such specifications are available; otherwise, use the best available grade.

7.1 Sample Analysis. Same as Method 101A, Section 7.2, with the following additions and exceptions:

7.1.1 Hydrochloric Acid. The concentrated HCl specified in Method 101A, Section 7.2.4, is not required.

7.1.2 Aqua Regia. Prepare immediately before use. Carefully add one volume of concentrated HNO_3 to three volumes of concentrated HCl.

8.0 Sample Collection, Preservation, Storage, and Transport

8.1 Sludge Sampling. Withdraw equal volume increments of sludge [for a total of at least 15 liters (16 quarts)] at intervals of 30 min over an 8-hr period, and combine in a rigid plastic container.

8.2 Sludge Mixing. Transfer the entire 15-liter sample to a mortar mixer. Mix the sample for a minimum of 30 min at 30 rpm. Take six 100-ml portions of sludge, and combine in a 2-liter blender. Blend sludge for 5 min; add water as necessary to give a fluid consistency. Immediately after stopping the blender, withdraw four 20-ml portions of blended sludge, and place them in separate, tared 125-ml Erlenmeyer flasks. Reweigh each flask to determine the exact amount of sludge added.

8.3 Sample Holding Time. Samples shall be analyzed within the time specified in the applicable subpart of the regulations.

9.0 Quality Control

Section	Quality control measure	Effect
10.0	Spectrophotometer calibration	Ensure linearity of spectrophotometer response to standards.
11.0	Check for matrix effects	Eliminate matrix effects.

10.0 Calibration and Standardization

Same as Method 101A, Section 10.2.

11.0 Analytical Procedures

11.1 Solids Content of Blended Sludge. Dry one of the 20-ml blended samples from Section 8.2 in an oven at 105 °C (221 °F) to constant weight. Cool in a desiccator, weigh and record the dry weight of the sample.

11.2 Aqua Regia Digestion of Blended Samples.

11.2.1 To each of the three remaining 20-ml samples from Section 8.2 add 25 ml of aqua regia, and digest the on a hot plate at low heat (do not boil) for 30 min, or until samples are a pale yellow-brown color and are void of the dark brown color characteristic of organic matter. Remove from hotplate and allow to cool.

11.2.2 Filter each digested sample separately through an S and S No. 588 filter or equivalent, and rinse the filter contents with 50 ml of water. Transfer the filtrate and filter washing to a 100-ml volumetric flask, and carefully dilute to volume with water.

11.3 Solids Content of the Sludge Before Blending. Remove two 100-ml portions of mixed sludge from the mortar mixer and place in separate, tared 400-ml beakers. Reweigh each beaker to determine the exact amount of sludge added. Dry in oven at 105 °C (221 °F) and cool in a desiccator to constant weight.

11.4 Analysis for Mercury. Analyze the three aqua regia-digested samples using the procedures outlined in Method 101A, Section 11.0.

12.0 Data Analysis and Calculations

12.1 Nomenclature.

C_m = Concentration of Hg in the digested sample, µg/g.

F_{sb} = Weight fraction of solids in the blended sludge.

F_{sm} = Weight fraction of solids in the collected sludge after mixing.

M = Hg content of the sewage sludge (on a dry basis), µg/g.

m = Mass of Hg in the aliquot of digested sample analyzed, µg.

n = number of digested samples (specified in Section 11.2 as three).

V_a = Volume of digested sample analyzed, ml.

V_s = Volume of digested sample, ml.

W_b = Weight of empty sample beaker, g.

W_{bs} = Weight of sample beaker and sample, g.

W_{bd} = Weight of sample beaker and sample after drying, g.

W_f = Weight of empty sample flask, g.

W_{fd} = Weight of sample flask and sample after drying, g.

W_{fs} = Weight of sample flask and sample, g.

12.2 Mercury Content of Digested Sample (Wet Basis).

12.2.1 For each sample analyzed for Hg content, calculate the arithmetic mean maximum absorbance of the two consecutive samples whose peak heights agree ±3 percent of their average. Correct this average value for the contribution of the blank. Use the calibration curve and these corrected averages to determine the final Hg concentration in the solution cell for each sludge sample.

12.2.2 Calculate the average Hg concentration of the digested samples by correcting for any dilutions made to bring the sample into the working range of the spectrophotometer and for the weight of the sludge portion digested, using Equation 105-1.

$$\bar{C}_m = \sum_{i=1}^{n} \left[\frac{mV_s}{V_a \left(W_{fs} - W_f \right)} \right]_i \qquad \text{Eq. 105-1}$$

12.3 Solids Content of Blended Sludge. Determine the solids content of the blended sludge using Equation 105-2.

$$F_{sb} = 1 - \frac{W_{fs} - W_{fd}}{W_{fs} - W_f} \qquad \text{Eq. 105-2}$$

12.4 Solids Content of Bulk Sample (before blending but, after mixing in mortar mixer). Determine the solids content of each 100 ml aliquot (Section 11.3), and average the results.

$$F_{sm} = 1 - \frac{W_{bs} - W_{bd}}{W_{bs} - W_b} \qquad \text{Eq. 105-3}$$

12.5 Mercury Content of Bulk Sample (Dry Basis). Average the results from the three samples from each 8-hr composite sample, and calculate the Hg concentration of the composite sample on a dry basis.

$$M = \frac{\bar{C}_m}{F_{sb}} \qquad \text{Eq. 105-4}$$

13.0 Method Performance

13.1 Range. The range of this method is 0.2 to 5 micrograms per gram; it may be extended by increasing or decreasing sample size.

14.0 Pollution Prevention. [Reserved]

15.0 Waste Management. [Reserved]

16.0 References

1. Bishop, J.N. Mercury in Sediments. Ontario Water Resources Commission. Toronto, Ontario, Canada. 1971.

2. Salma, M. Private Communication. EPA California/Nevada Basin Office. Alameda, California.

3. Hatch, W.R. and W.L. Ott. Determination of Sub-Microgram Quantities of Mercury by Atomic Absorption Spectrophotometry. Analytical Chemistry. 40:2085. 1968.

4. Bradenberger, H., and H. Bader. The Determination of Nanogram Levels of Mercury in Solution by a Flameless Atomic Absorption Technique. Atomic Absorption Newsletter. 6:101. 1967.

5. Analytical Quality Control Laboratory (AQCL). Mercury in Sediment (Cold Vapor Technique) (Provisional Method). U.S. Environmental Protection Agency. Cincinnati, Ohio. April 1972.

6. Kopp, J.F., M.C. Longbottom, and L.B. Lobring. “Cold Vapor” Method for Determining Mercury. Journal AWWA. 64(1):20-25. 1972.

7. Manual of Methods for Chemical Analysis of Water and Wastes. U.S. Environmental Protection Agency. Cincinnati, Ohio. Publication No. EPA-624/2-74-003. December 1974. pp. 118-138.

8. Mitchell, W.J., M.R. Midgett, J. Suggs, R.J. Velton, and D. Albrink. Sampling and Homogenizing Sewage for Analysis. Environmental Monitoring and Support Laboratory, Office of Research and Development, U.S. Environmental Protection Agency. Research Triangle Park, N.C. March 1979. p. 7.

17.0 Tables, Diagrams, Flowcharts, and Validation Data. [Reserved]

Method 106—Determination of Vinyl Chloride Emissions From Stationary Sources

1.0 Scope and Application

1.1 Analytes.

Analyte	CAS No.	Sensitivity
Vinyl Chloride (CH2:CHCl)	75-01-4	Dependent upon analytical equipment.

1.2 Applicability. This method is applicable for the determination of vinyl chloride emissions from ethylene dichloride, vinyl chloride, and polyvinyl chloride manufacturing processes. This method does not measure vinyl chloride contained in particulate matter.

1.3 Data Quality Objectives. Adherence to the requirements of this method will enhance the quality of the data obtained from air pollutant sampling methods.

2.0 Summary of Method

2.1 An integrated bag sample of stack gas containing vinyl chloride is subjected to GC analysis using a flame ionization detector (FID).

3.0 Definitions. [Reserved]

4.0 Interferences

4.1 Resolution interferences of vinyl chloride may be encountered on some sources. Therefore, the chromatograph operator should select the column and operating parameters best suited to the particular analysis requirements. The selection made is subject to approval of the Administrator. Approval is automatic, provided that confirming data are produced through an adequate supplemental analytical technique, and that the data are available for review by the Administrator. An example of this would be analysis with a different column or GC/mass spectroscopy.

5.0 Safety

5.1 Disclaimer. This method may involve hazardous materials, operations, and equipment. This test method may not address all of the safety problems associated with its use. It is the responsibility of the user of this test method to establish appropriate safety and health practices and determine the applicability of regulatory limitations prior to performing this test method.

5.2 Toxic Analyte. Care must be exercised to prevent exposure of sampling personnel to vinyl chloride, which is a carcinogen.

6.0 Equipment and Supplies

6.1 Sample Collection (see Figure 106-1). The sampling train consists of the following components:

6.1.1 Probe. Stainless steel, borosilicate glass, Teflon tubing (as stack temperature permits), or equivalent, equipped with a glass wool plug to remove particulate matter.

6.1.2 Sample Lines. Teflon, 6.4-mm outside diameter, of sufficient length to connect probe to bag. Use a new unused piece for each series of bag samples that constitutes an emission test, and discard upon completion of the test.

6.1.3 Quick Connects. Stainless steel, male (2) and female (2), with ball checks (one pair without), located as shown in Figure 106-1.

6.1.4 Tedlar Bags. 50- to 100-liter capacity, to contain sample. Aluminized Mylar bags may be used if the samples are analyzed within 24 hours of collection.

6.1.5 Bag Containers. Rigid leak-proof containers for sample bags, with covering to protect contents from sunlight.

6.1.6 Needle Valve. To adjust sample flow rates.

6.1.7 Pump. Leak-free, with minimum of 2-liter/min capacity.

6.1.8 Charcoal Tube. To prevent admission of vinyl chloride and other organics to the atmosphere in the vicinity of samplers.

6.1.9 Flowmeter. For observing sampling flow rate; capable of measuring a flow range from 0.10 to 1.00 liter/min.

6.1.10 Connecting Tubing. Teflon, 6.4-mm outside diameter, to assemble sampling train (Figure 106-1).

6.1.11 Tubing Fittings and Connectors. Teflon or stainless steel, to assemble sampling training.

6.2 Sample Recovery. Teflon tubing, 6.4-mm outside diameter, to connect bag to GC sample loop. Use a new unused piece for each series of bag samples that constitutes an emission test, and discard upon conclusion of analysis of those bags.

6.3 Analysis. The following equipment is required:

6.3.1 Gas Chromatograph. With FID potentiometric strip chart recorder and 1.0 to 5.0-ml heated sampling loop in automatic sample valve. The chromatographic system shall be capable of producing a response to 0.1-ppmv vinyl chloride that is at least as great as the average noise level. (Response is measured from the average value of the base line to the maximum of the wave form, while standard operating conditions are in use.)

6.3.2 Chromatographic Columns. Columns as listed below. Other columns may be used provided that the precision and accuracy of the analysis of vinyl chloride standards are not impaired and that information is available for review confirming that there is adequate resolution of vinyl chloride peak. (Adequate resolution is defined as an area overlap of not more than 10 percent of the vinyl chloride peak by an interferent peak. Calculation of area overlap is explained in Procedure 1 of appendix C to this part: “Determination of Adequate Chromatographic Peak Resolution.”)

6.3.2.1 Column A. Stainless steel, 2.0 m by 3.2 mm, containing 80/100-mesh Chromasorb 102.

6.3.2.2 Column B. Stainless steel, 2.0 m by 3.2 mm, containing 20 percent GE SF-96 on 60/ip-mesh Chromasorb P AW; or stainless steel, 1.0 m by 3.2 mm containing 80/100-mesh Porapak T. Column B is required as a secondary column if acetaldehyde is present. If used, column B is placed after column A. The combined columns should be operated at 120 °C (250 °F).

6.3.3 Rate Meters (2). Rotameter , or equivalent, 100-ml/min capacity, with flow control valves.

6.3.4 Gas Regulators. For required gas cylinders.

6.3.5 Temperature Sensor. Accurate to ±1 °C (±2 °F), to measure temperature of heated sample loop at time of sample injection.

6.3.6 Barometer. Accurate to ±5 mm Hg, to measure atmospheric pressure around GC during sample analysis.

6.3.7 Pump. Leak-free, with minimum of 100-ml/min capacity.

6.3.8 Recorder. Strip chart type, optionally equipped with either disc or electronic integrator.

6.3.9 Planimeter. Optional, in place of disc or electronic integrator on recorder, to measure chromatograph peak areas.

6.4 Calibration and Standardization.

6.4.1 Tubing. Teflon, 6.4-mm outside diameter, separate pieces marked for each calibration concentration.

NOTE: The following items are required only if the optional standard gas preparation procedures (Section 10.1) are followed.

6.4.2 Tedlar Bags. Sixteen-inch-square size, with valve; separate bag marked for each calibration concentration.

6.4.3 Syringes. 0.5-ml and 50-µl, gas tight, individually calibrated to dispense gaseous vinyl chloride.

6.4.4 Dry Gas Meter with Temperature and Pressure Gauges. Singer Model DTM-115 with 802 index, or equivalent, to meter nitrogen in preparation of standard gas mixtures, calibrated at the flow rate used to prepare standards.

7.0 Reagents and Standards

7.1 Analysis. The following reagents are required for analysis.

7.1.1 Helium or Nitrogen. Purity 99.9995 percent or greater, for chromatographic carrier gas.

7.1.2 Hydrogen. Purity 99.9995 percent or greater.

7.1.3 Oxygen or Air. Either oxygen (purity 99.99 percent or greater) or air (less than 0.1 ppmv total hydrocarbon content), as required by detector.

7.2 Calibration. Use one of the following options: either Sections 7.2.1 and 7.2.2, or Section 7.2.3.

7.2.1 Vinyl Chloride. Pure vinyl chloride gas certified by the manufacturer to contain a minimum of 99.9 percent vinyl chloride. If the gas manufacturer maintains a bulk cylinder supply of 99.9+ percent vinyl chloride, the certification analysis may have been performed on this supply, rather than on each gas cylinder prepared from this bulk supply. The date of gas cylinder preparation and the certified analysis must have been affixed to the cylinder before shipment from the gas manufacturer to the buyer.

7.2.2 Nitrogen. Same as described in Section 7.1.1.

7.2.3 Cylinder Standards. Gas mixture standards (50-,10-, and 5 ppmv vinyl chloride) in nitrogen cylinders may be used to directly prepare a chromatograph calibration curve as described in Section 10.3 if the following conditions are met: (a) The manufacturer certifies the gas composition with an accuracy of ±3 percent or better. (b) The manufacturer recommends a maximum shelf life over which the gas concentration does not change by greater than

±5 percent from the certified value. (c) The manufacturer affixes the date of gas cylinder preparation, certified vinyl chloride concentration, and recommended maximum shelf to the cylinder before shipment to the buyer.

7.2.3.1 Cylinder Standards Certification. The manufacturer shall certify the concentration of vinyl chloride in nitrogen in each cylinder by (a) directly analyzing each cylinder and (b) calibrating his analytical procedure on the day of cylinder analysis. To calibrate his analytical procedure, the manufacturer shall use as a minimum, a three point calibration curve. It is recommended that the manufacturer maintain (1) a high concentration calibration standard (between 50 and 100 ppmv) to prepare his calibration curve by an appropriate dilution technique and (2) a low-concentration calibration standard (between 5 and 10 ppmv) to verify the dilution technique used. If the difference between the apparent concentration read from the calibration curve and the true concentration assigned to the low-concentration calibration standard exceeds 5 percent of the true concentration, the manufacturer shall determine the source of error and correct it, then repeat the three-point calibration.

7.2.3.2 Verification of Manufacturer's Calibration Standards. Before using a standard, the manufacturer shall verify each calibration standard (a) by comparing it to gas mixtures prepared (with 99 mole percent vinyl chloride) in accordance with the procedure described in Section 7.2.1 or (b) calibrating it against vinyl chloride cylinder Standard Reference Materials (SRM's) prepared by the National Institute of Standards and Technology, if such SRM's are available. The agreement between the initially determined concentration value and the verification concentration value must be ±5 percent. The manufacturer must reverify all calibration standards on a time interval consistent with the shelf life of the cylinder standards sold.

8.0 Sample Collection, Preservation, Storage, and Transport

NOTE: Performance of this method should not be attempted by persons unfamiliar with the operation of a gas chromatograph (GC) nor by those who are unfamiliar with source sampling, because knowledge beyond the scope of this presentation is required.

8.1 Bag Leak-Check. The following leak-check procedure is recommended, but not required, prior to sample collection. The post-test leak-check procedure is mandatory. Connect a water manometer and pressurize the bag to 5 to 10 cm H_2O (2 to 4 in. H_2O). Allow to stand for 10 min. Any displacement in the water manometer indicates a leak. Also, check the rigid container for leaks in this manner.

NOTE: An alternative leak-check method is to pressurize the bag to 5 to 10 cm H2O and allow it to stand overnight. A deflated bag indicates a leak. For each sample bag in its rigid container, place a rotameter in line between the bag and the pump inlet. Evacuate the bag. Failure of the rotameter to register zero flow when the bag appears to be empty indicates a leak.

8.2 Sample Collection. Assemble the sample train as shown in Figure 106-1. Join the quick connects as illustrated, and determine that all connection between the bag and the probe are tight. Place the end of the probe at the centroid of the stack and start the pump with the needle valve adjusted to yield a flow that will fill over 50 percent of bag volume in the specific sample period. After allowing sufficient time to purge the line several times, change the vacuum line from the container to the bag and evacuate the bag until the rotameter indicates no flow. Then reposition the sample and vacuum lines and begin the actual sampling, keeping the rate proportional to the stack velocity. At all times, direct the gas exiting the rotameter away from sampling personnel. At the end of the sample period, shut off the pump, disconnect the sample line from the bag, and disconnect the vacuum line from the bag container. Protect the bag container from sunlight.

8.3 Sample Storage. Keep the sample bags out of direct sunlight. When at all possible, analysis is to be performed within 24 hours, but in no case in excess of 72 hours of sample collection. Aluminized Mylar bag samples must be analyzed within 24 hours.

8.4 Post-test Bag Leak-Check. Subsequent to recovery and analysis of the sample, leak-check the sample bag according to the procedure outlined in Section 8.1.

9.0 Quality Control

Section	Quality control measure	Effect
10.3	Chromatograph calibration	Ensure precision and accuracy of chromatograph.

10.0 Calibration and Standardization

NOTE: Maintain a laboratory log of all calibrations.

10.1 Preparation of Vinyl Chloride Standard Gas Mixtures. (Optional Procedure-delete if cylinder standards are used.) Evacuate a 16-inch square Tedlar bag that has passed a leak-check (described in Section 8.1) and meter in 5.0 liters of nitrogen. While the bag is filling, use the 0.5-ml syringe to inject 250 µl of 99.9+ percent vinyl chloride gas through the wall of the bag. Upon withdrawing the syringe, immediately cover the resulting hole with a piece of adhesive tape. The bag now contains a vinyl chloride concentration of 50 ppmv. In a like manner use the 50 µl syringe to prepare gas mixtures having 10-and 5-ppmv vinyl chloride concentrations. Place each bag on a smooth surface and alternately depress opposite sides of the bag 50 times to further mix the gases. These gas mixture standards may be used for 10 days from the date of preparation, after which time new gas mixtures must be prepared. (Caution: Contamination may be a problem when a bag is reused if the new gas mixture standard is a lower concentration than the previous gas mixture standard.)

10.2 Determination of Vinyl Chloride Retention Time. (This section can be performed simultaneously with Section 10.3.) Establish chromatograph conditions identical with those in Section 11.3. Determine proper attenuator position. Flush the sampling loop with helium or nitrogen and activate the sample valve. Record the injection time, sample loop temperature, column temperature, carrier gas flow rate, chart speed, and attenuator setting. Record peaks and detector responses that occur in the absence of vinyl chloride. Maintain conditions with the equipment plumbing arranged identically to Section 11.2, and flush the sample loop for 30 seconds at the rate of 100 ml/min with one of the vinyl chloride calibration mixtures. Then activate the sample valve. Record the injection time. Select the peak that corresponds to vinyl chloride. Measure the distance on the chart from the injection time to the time at which the peak maximum occurs. This quantity divided by the chart speed is defined as the retention time. Since other organics may be present in the sample, positive identification of the vinyl chloride peak must be made.

10.3 Preparation of Chromatograph Calibration Curve. Make a GC measurement of each gas mixture standard (described in Section 7.2.3 or 10.1) using conditions identical to those listed in Sections 11.2 and 11.3. Flush the sampling loop for 30 seconds at the rate of 100 ml/min with one of the standard mixtures, and activate the sample valve. Record the concentration of vinyl chloride injected (C_c), attenuator setting, chart speed, peak area, sample loop temperature, column temperature, carrier gas flow rate, and retention time. Record the barometric pressure. Calculate A_c , the peak area multiplied by the attenuator setting. Repeat until two consecutive injection areas are within 5 percent, then plot the average of those two values versus C_c . When the other standard gas mixtures have been similarly analyzed and plotted, draw a straight line through the points derived by the least squares method. Perform calibration daily, or before and after the analysis of each emission test set of bag samples, whichever is more frequent. For each group of sample analyses, use the average of the two calibration curves which bracket that group to determine the respective sample concentrations. If the two calibration curves differ by more than 5 percent from their mean value, then report the final results by both calibration curves.

11.0 Analytical Procedure

11.2 Sample Recovery. With a new piece of Teflon tubing identified for that bag, connect a bag inlet valve to the gas chromatograph sample valve. Switch the valve to receive gas from the bag through the sample loop. Arrange the equipment so the sample gas passes from the sample valve to 100-ml/min rotameter with flow control valve followed by a charcoal tube and a 1-in. H_2O pressure gauge. Maintain the sample flow either by a vacuum pump or container pressurization if the collection bag remains in the rigid container. After sample loop purging is ceased, allow the pressure gauge to return to zero before activating the gas sampling valve.

11.3 Analysis.

11.3.1 Set the column temperature to 100 °C (210 °F) and the detector temperature to 150 °C (300 °F). When optimum hydrogen and oxygen (or air) flow rates have been determined, verify and maintain these flow rates during all chromatography operations. Using helium or nitrogen as the carrier gas, establish a flow rate in the range

consistent with the manufacturer's requirements for satisfactory detector operation. A flow rate of approximately 40 ml/min should produce adequate separations. Observe the base line periodically and determine that the noise level has stabilized and that base line drift has ceased. Purge the sample loop for 30 seconds at the rate of 100 ml/min, shut off flow, allow the sample loop pressure to reach atmospheric pressure as indicated by the H_2O manometer, then activate the sample valve. Record the injection time (the position of the pen on the chart at the time of sample injection), sample number, sample loop temperature, column temperature, carrier gas flow rate, chart speed, and attenuator setting. Record the barometric pressure. From the chart, note the peak having the retention time corresponding to vinyl chloride as determined in Section 10.2. Measure the vinyl chloride peak area, A_m , by use of a disc integrator, electronic integrator, or a planimeter. Measure and record the peak heights, H_m . Record A_m and retention time. Repeat the injection at least two times or until two consecutive values for the total area of the vinyl chloride peak agree within 5 percent of their average. Use the average value for these two total areas to compute the bag concentration.

11.3.2 Compare the ratio of H_m to A_m for the vinyl chloride sample with the same ratio for the standard peak that is closest in height. If these ratios differ by more than 10 percent, the vinyl chloride peak may not be pure (possibly acetaldehyde is present) and the secondary column should be employed (see Section 6.3.2.2).

11.4 Determination of Bag Water Vapor Content. Measure the ambient temperature and barometric pressure near the bag. From a water saturation vapor pressure table, determine and record the water vapor content of the bag, B_{wb} , as a decimal figure. (Assume the relative humidity to be 100 percent unless a lesser value is known.)

12.0 Calculations and Data Analysis

12.1 Nomenclature.

A_m = Measured peak area.

A_f = Attenuation factor.

B_{wb} = Water vapor content of the bag sample, as analyzed, volume fraction.

C_b = Concentration of vinyl chloride in the bag, ppmv.

C_c = Concentration of vinyl chloride in the standard sample, ppmv.

P_i = Laboratory pressure at time of analysis, mm Hg.

P_r = Reference pressure, the laboratory pressure recorded during calibration, mm Hg.

T_i = Absolute sample loop temperature at the time of analysis, °K (°R).

T_r = Reference temperature, the sample loop temperature recorded during calibration, °K (°R).

12.2 Sample Peak Area. Determine the sample peak area, A_c , as follows:

$$A_c = A_m A_f \qquad \text{Eq. 106-1}$$

12.3 Vinyl Chloride Concentration. From the calibration curves prepared in Section 10.3, determine the average concentration value of vinyl chloride, C_c , that corresponds to A_c , the sample peak area. Calculate the concentration of vinyl chloride in the bag, C_b , as follows:

$$C_b = \frac{C_c P_r T_i}{P_i T_r \left(1 - B_{wb}\right)} \qquad \text{Eq. 106-2}$$

13.0 Method Performance

13.1 Analytical Range. This method is designed for the 0.1 to 50 parts per million by volume (ppmv) range. However, common gas chromatograph (GC) instruments are capable of detecting 0.02 ppmv vinyl chloride. With proper calibration, the upper limit may be extended as needed.

14.0 Pollution Prevention, [Reserved]

15.0 Waste Management, [Reserved]

16.0 References

1. Brown D.W., E.W. Loy, and M.H. Stephenson. Vinyl Chloride Monitoring Near the B. F. Goodrich Chemical Company in Louisville, KY. Region IV, U.S. Environmental Protection Agency, Surveillance and Analysis Division, Athens, GA. June 24, 1974.

2. G.D. Clayton and Associates. Evaluation of a Collection and Analytical Procedure for Vinyl Chloride in Air. U.S. Environmental Protection Agency, Research Triangle Park, N.C. EPA Contract No. 68-02-1408, Task Order No. 2, EPA Report No. 75-VCL-1. December 13, 1974.

3. Midwest Research Institute. Standardization of Stationary Source Emission Method for Vinyl Chloride. U.S. Environmental Protection Agency, Research Triangle Park, N.C. Publication No. EPA-600/4-77-026. May 1977.

4. Scheil, G. and M.C. Sharp. Collaborative Testing of EPA Method 106 (Vinyl Chloride) that Will Provide for a Standardized Stationary Source Emission Measurement Method. U.S. Environmental Protection Agency, Research Triangle Park, N.C. Publication No. EPA 600/4-78-058. October 1978.

17.0 Tables, Diagrams Flowcharts, and Validation Data.

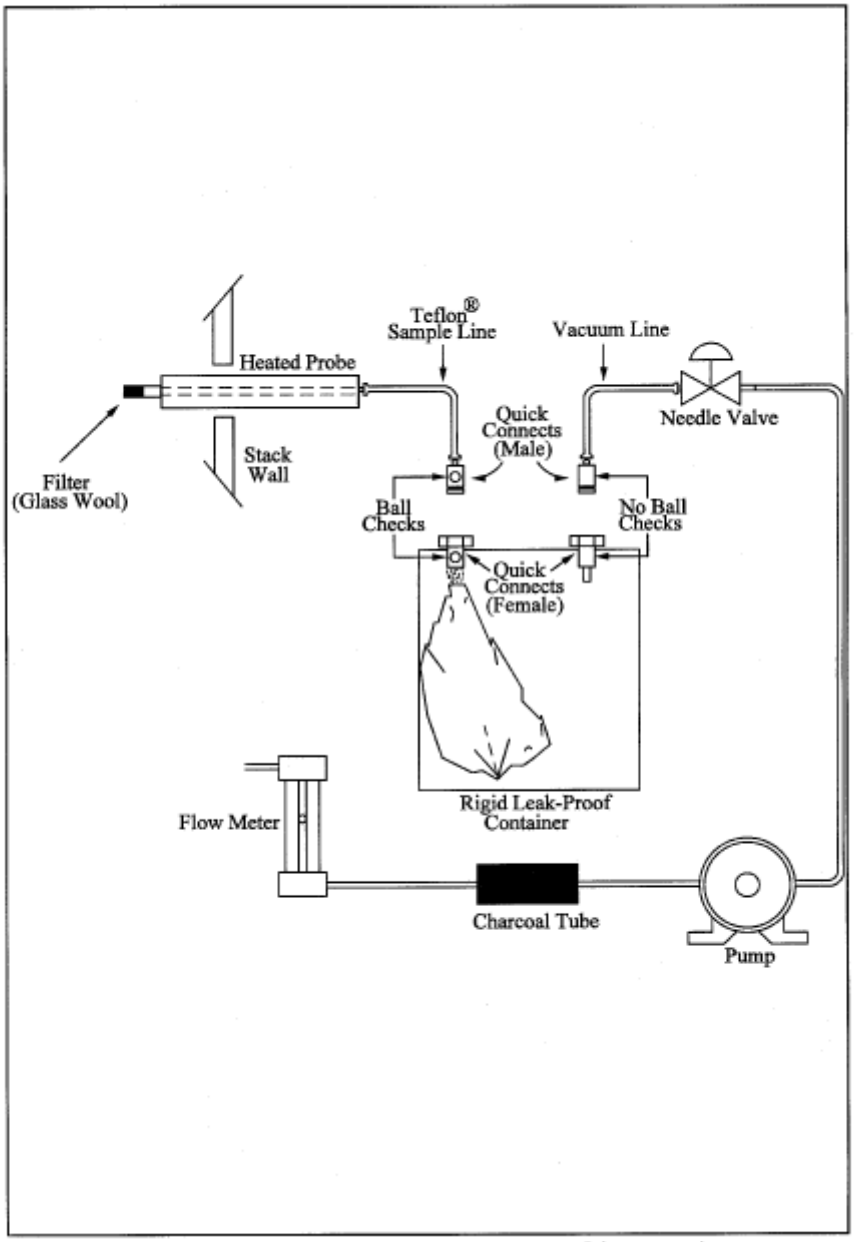

Figure 106-1. Integrated-bag sampling train.

Method 107—Determination of Vinyl Chloride Content of In-Process Wastewater Samples, and Vinyl Chloride Content of Polyvinyl Chloride Resin Slurry, Wet Cake, and Latex Samples

NOTE: Performance of this method should not be attempted by persons unfamiliar with the operation of a gas chromatograph (GC) nor by those who are unfamiliar with source sampling, because knowledge beyond the scope of this presentation is required. This method does not include all of the specifications (*e.g.,* equipment and supplies) and procedures (*e.g.,* sampling and analytical) essential to its performance. Some material is incorporated by reference from other methods in this part. Therefore, to obtain reliable results, persons using this method should have a thorough knowledge of at least the following additional test methods: Method 106.

1.0 Scope and Application

1.1 Analytes.

Analyte	CAS No.	Sensitivity
Vinyl Chloride (CH_2:CHCl)	75-01-4	Dependent upon analytical equipment.

1.2 Applicability. This method is applicable for the determination of the vinyl chloride monomer (VCM) content of in-process wastewater samples, and the residual vinyl chloride monomer (RCVM) content of polyvinyl chloride (PVC) resins, wet, cake, slurry, and latex samples. It cannot be used for polymer in fused forms, such as sheet or cubes. This method is not acceptable where methods from section 304(h) of the Clean Water Act, 33 U.S.C. 1251 *et seq.* (the Federal Water Pollution Control Amendments of 1972 as amended by the Clean Water Act of 1977) are required.

1.3 Data Quality Objectives. Adherence to the requirements of this method will enhance the quality of the data obtained from air pollutant sampling methods.

2.0 Summary of Method

2.1 The basis for this method relates to the vapor equilibrium that is established at a constant known temperature in a closed system between RVCM, PVC resin, water, and air. The RVCM in a PVC resin will equilibrate rapidly in a closed vessel, provided that the temperature of the PVC resin is maintained above the glass transition temperature of that specific resin.

2.2 A sample of PVC or in-process wastewater is collected in a vial or bottle and is conditioned. The headspace in the vial or bottle is then analyzed for vinyl chloride using gas chromatography with a flame ionization detector.

3.0 Definitions [Reserved]

4.0 Interferences

4.1 The chromatograph columns and the corresponding operating parameters herein described normally provide an adequate resolution of vinyl chloride; however, resolution interferences may be encountered on some sources. Therefore, the chromatograph operator shall select the column and operating parameters best suited to his particular analysis requirements, subject to the approval of the Administrator. Approval is automatic provided that confirming data are produced through an adequate supplemental analytical technique, such as analysis with a different column or GC/mass spectroscopy, and that these data are made available for review by the Administrator.

5.0 Safety

5.1 Disclaimer. This method may involve hazardous materials, operations, and equipment. This test method may not address all of the safety problems associated with its use. It is the responsibility of the user of this test method to establish appropriate safety and health practices and determine the applicability of regulatory limitations prior to performing this test method.

5.2 Toxic Analyte. Care must be exercised to prevent exposure of sampling personnel to vinyl chloride, which is a carcinogen. Do not release vinyl chloride to the laboratory atmosphere during preparation of standards. Venting or purging with VCM/air mixtures must be held to a minimum. When they are required, the vapor must be routed to outside air. Vinyl chloride, even at low ppm levels, must never be vented inside the laboratory. After vials have been analyzed, the gas must be vented prior to removal of the vial from the instrument turntable. Vials must be vented through a hypodermic needle connected to an activated charcoal tube to prevent release of vinyl chloride into the laboratory atmosphere. The charcoal must be replaced prior to vinyl chloride breakthrough.

6.0 Equipment and Supplies

6.1 Sample Collection. The following equipment is required:

6.1.1 Glass bottles. 60-ml (2-oz) capacity, with wax-lined screw-on tops, for PVC samples.

6.1.2 Glass Vials. Headspace vials, with Teflon-faced butyl rubber sealing discs, for water samples.

6.1.3 Adhesive Tape. To prevent loosening of bottle tops.

6.2 Sample Recovery. The following equipment is required:

6.2.1 Glass Vials. Headspace vials, with butyl rubber septa and aluminum caps. Silicone rubber is not acceptable.

6.2.2 Analytical Balance. Capable of determining sample weight within an accuracy of ±1 percent.

6.2.3 Vial Sealer. To seal headspace vials.

6.2.4 Syringe. 100-ml capacity.

6.3 Analysis. The following equipment is required:

6.3.1 Headspace Sampler and Chromatograph. Capable of sampling and analyzing a constant amount of headspace gas from a sealed vial, while maintaining that vial at a temperature of 90 °C ±0.5 °C (194 °F ±0.9 °F). The chromatograph shall be equipped with a flame ionization detector (FID). Perkin-Elmer Corporation Models F-40, F-42, F-45, HS-6, and HS-100, and Hewlett-Packard Corporation Model 19395A have been found satisfactory. Chromatograph backflush capability may be required.

6.3.2 Chromatographic Columns. Stainless steel 1 m by 3.2 mm and 2 m by 3.2 mm, both containing 50/80-mesh Porapak Q. Other columns may be used provided that the precision and accuracy of the analysis of vinyl chloride standards are not impaired and information confirming that there is adequate resolution of the vinyl chloride peak are available for review. (Adequate resolution is defined as an area overlap of not more than 10 percent of the vinyl chloride peak by an interferant peak. Calculation of area overlap is explained in Procedure 1 of appendix C to this part: “Determination of Adequate Chromatographic Peak Resolution.”) Two 1.83 m columns, each containing 1 percent Carbowax 1500 on Carbopak B, have been found satisfactory for samples containing acetaldehyde.

6.3.3 Temperature Sensor. Range 0 to 100 °C (32 to 212 °F) accurate to 0.1 °C.

6.3.4 Integrator-Recorder. To record chromatograms.

6.3.5 Barometer. Accurate to 1 mm Hg.

6.3.6 Regulators. For required gas cylinders.

6.3.7 Headspace Vial Pre-Pressurizer. Nitrogen pressurized hypodermic needle inside protective shield.

7.0 Reagents and Standards

7.1 Analysis. Same as Method 106, Section 7.1, with the addition of the following:

7.1.1 Water. Interference-free.

7.2 Calibration. The following items are required for calibration:

7.2.1 Cylinder Standards (4). Gas mixture standards (50-, 500-, 2000- and 4000-ppm vinyl chloride in nitrogen cylinders). Cylinder standards may be used directly to prepare a chromatograph calibration curve as described in Section 10.3, if the following conditions are met: (a) The manufacturer certifies the gas composition with an accuracy of ±3 percent or better (see Section 7.2.1.1). (b) The manufacturer recommends a maximum shelf life over which the gas concentration does not change by greater than ±5 percent from the certified value. (c) The manufacturer affixes

the date of gas cylinder preparation, certified vinyl chloride concentration, and recommended maximum shelf life to the cylinder before shipment to the buyer.

7.2.1.1 Cylinder Standards Certification. The manufacturer shall certify the concentration of vinyl chloride in nitrogen in each cylinder by (a) directly analyzing each cylinder and (b) calibrating the analytical procedure on the day of cylinder analysis. To calibrate the analytical procedure, the manufacturer shall use, as a minimum, a 3-point calibration curve. It is recommended that the manufacturer maintain (1) a high-concentration calibration standard (between 4000 and 8000 ppm) to prepare the calibration curve by an appropriate dilution technique and (2) a low-concentration calibration standard (between 50 and 500 ppm) to verify the dilution technique used. If the difference between the apparent concentration read from the calibration curve and the true concentration assigned to the low-concentration calibration standard exceeds 5 percent of the true concentration, the manufacturer shall determine the source of error and correct it, then repeat the 3-point calibration.

7.2.1.2 Verification of Manufacturer's Calibration Standards. Before using, the manufacturer shall verify each calibration standard by (a) comparing it to gas mixtures prepared (with 99 mole percent vinyl chloride) in accordance with the procedure described in Section 10.1 of Method 106 or by (b) calibrating it against vinyl chloride cylinder Standard Reference Materials (SRMs) prepared by the National Institute of Standards and Technology, if such SRMs are available. The agreement between the initially determined concentration value and the verification concentration value must be within 5 percent. The manufacturer must reverify all calibration standards on a time interval consistent with the shelf life of the cylinder standards sold.

8.0 Sample Collection, Preservation, Storage, and Transport

8.1 Sample Collection.

8.1.1 PVC Sampling. Allow the resin or slurry to flow from a tap on the tank or silo until the tap line has been well purged. Extend and fill a 60-ml sample bottle under the tap, and immediately tighten a cap on the bottle. Wrap adhesive tape around the cap and bottle to prevent the cap from loosening. Place an identifying label on each bottle, and record the date, time, and sample location both on the bottles and in a log book.

8.1.2 Water Sampling. At the sampling location fill the vials bubble-free to overflowing so that a convex meniscus forms at the top. The excess water is displaced as the sealing disc is carefully placed, with the Teflon side down, on the opening of the vial. Place the aluminum seal over the disc and the neck of the vial, and crimp into place. Affix an identifying label on the bottle, and record the date, time, and sample location both on the vials and in a log book.

8.2 Sample Storage. All samples must be analyzed within 24 hours of collection, and must be refrigerated during this period.

9.0 Quality Control

Section	Quality control measure	Effect
10.3	Chromatograph calibration	Ensure precision and accuracy of chromatograph.

10.0 Calibration and Standardization

NOTE: Maintain a laboratory log of all calibrations.

10.1 Preparation of Standards. Calibration standards are prepared as follows: Place 100 µl or about two equal drops of distilled water in the sample vial, then fill the vial with the VCM/nitrogen standard, rapidly seat the septum, and seal with the aluminum cap. Use a $\frac{1}{8}$ -in. stainless steel line from the cylinder to the vial. Do not use rubber or Tygon tubing. The sample line from the cylinder must be purged (into a properly vented hood) for several minutes prior to filling the vials. After purging, reduce the flow rate to between 500 and 1000 cc/min. Place end of tubing into vial (near bottom). Position a septum on top of the vial, pressing it against the $\frac{1}{8}$ -in. filling tube to minimize the size of the vent opening. This is necessary to minimize mixing air with the standard in the vial. Each vial is to be purged with standard for 90 seconds, during which time the filling tube is gradually slid to the top of the vial. After the 90 seconds, the tube is removed with the septum, simultaneously sealing the vial. Practice will be necessary to develop good technique. Rubber gloves should be worn during the above operations. The sealed vial must then be pressurized for 60 seconds

using the vial prepressurizer. Test the vial for leakage by placing a drop of water on the septum at the needle hole. Prepressurization of standards is not required unless samples have been prepressurized.

10.2 Analyzer Calibration. Calibration is to be performed each 8-hour period the chromatograph is used. Alternatively, calibration with duplicate 50-, 500-, 2,000-, and 4,000-ppm standards (hereafter described as a four-point calibration) may be performed on a monthly basis, provided that a calibration confirmation test consisting of duplicate analyses of an appropriate standard is performed once per plant shift, or once per chromatograph carrousel operation (if the chromatograph operation is less frequent than once per shift). The criterion for acceptance of each calibration confirmation test is that both analyses of 500-ppm standards [2,000-ppm standards if dispersion resin (excluding latex resin) samples are being analyzed] must be within 5 percent of the most recent four-point calibration curve. If this criterion is not met, then a complete four-point calibration must be performed before sample analyses can proceed.

10.3 Preparation of Chromatograph Calibration Curve. Prepare two vials each of 50-, 500-, 2,000-, and 4,000-ppm standards. Run the calibration samples in exactly the same manner as regular samples. Plot A_s , the integrator area counts for each standard sample, versus C_c , the concentration of vinyl chloride in each standard sample. Draw a straight line through the points derived by the least squares method.

11.0 Analytical Procedure

11.1 Preparation of Equipment. Install the chromatographic column and condition overnight at 160 °C (320 °F). In the first operation, Porapak columns must be purged for 1 hour at 230 °C (450 °F).

Do not connect the exit end of the column to the detector while conditioning. Hydrogen and air to the detector must be turned off while the column is disconnected.

11.2 Flow Rate Adjustments. Adjust flow rates as follows:

11.2.1. Nitrogen Carrier Gas. Set regulator on cylinder to read 50 psig. Set regulator on chromatograph to produce a flow rate of 30.0 cc/min. Accurately measure the flow rate at the exit end of the column using the soap film flowmeter and a stopwatch, with the oven and column at the analysis temperature. After the instrument program advances to the “B” (backflush) mode, adjust the nitrogen pressure regulator to exactly balance the nitrogen flow rate at the detector as was obtained in the “A” mode.

11.2.2. Vial Prepressurizer Nitrogen.

11.2.2.1 After the nitrogen carrier is set, solve the following equation and adjust the pressure on the vial prepressurizer accordingly.

$$P = \frac{T_1}{T_2}\left[P_1 - \frac{P_{w1} - P_{w2}}{7.50}\right] - 10kPa \qquad \text{Eq. 107-1}$$

Where:

T_1 = Ambient temperature, °K (°R).

T_2 = Conditioning bath temperature, °K (°R).

P_1 = Gas chromatograph absolute dosing pressure (analysis mode), k Pa.

P_{w1} = Water vapor pressure 525.8 mm Hg @ 90 °C.

P_{w2} = Water vapor pressure 19.8 mm Hg @ 22 °C.

7.50 = mm Hg per k Pa.

10 kPa = Factor to adjust the prepressurized pressure to slightly less than the dosing pressure.

11.2.2.2 Because of gauge errors, the apparatus may over-pressurize the vial. If the vial pressure is at or higher than the dosing pressure, an audible double injection will occur. If the vial pressure is too low, errors will occur on resin samples because of inadequate time for head-space gas equilibrium. This condition can be avoided by running several standard gas samples at various pressures around the calculated pressure, and then selecting the highest pressure that does not produce a double injection. All samples and standards must be pressurized for 60 seconds using the vial prepressurizer. The vial is then placed into the 90 °C conditioning bath and tested for leakage by placing a drop of water on the septum at the needle hole. A clean, burr-free needle is mandatory.

11.2.3. Burner Air Supply. Set regulator on cylinder to read 50 psig. Set regulator on chromatograph to supply air to burner at a rate between 250 and 300 cc/min. Check with bubble flowmeter.

11.2.4. Hydrogen Supply. Set regulator on cylinder to read 30 psig. Set regulator on chromatograph to supply approximately 35 ±5 cc/min. Optimize hydrogen flow to yield the most sensitive detector response without extinguishing the flame. Check flow with bubble meter and record this flow.

11.3 Temperature Adjustments. Set temperatures as follows:

11.3.1. Oven (chromatograph column), 140 °C (280 °F).

11.3.2. Dosing Line, 150 °C (300 °F).

11.3.3. Injection Block, 170 °C (340 °F).

11.3.4. Sample Chamber, Water Temperature, 90 °C ±1.0 °C (194 °F ±1.8 °F).

11.4 Ignition of Flame Ionization Detector. Ignite the detector according to the manufacturer's instructions.

11.5 Amplifier Balance. Balance the amplifier according to the manufacturer's instructions.

11.6 Programming the Chromatograph. Program the chromatograph as follows:

11.6.1. I—Dosing or Injection Time. The normal setting is 2 seconds.

11.6.2. A—Analysis Time. The normal setting is approximately 70 percent of the VCM retention time. When this timer terminates, the programmer initiates backflushing of the first column.

11.6.3. B—Backflushing Time. The normal setting is double the analysis time.

11.6.4. W—Stabilization Time. The normal setting is 0.5 min to 1.0 min.

11.6.5. X—Number of Analyses Per Sample. The normal setting is one.

11.7. Sample Treatment. All samples must be recovered and analyzed within 24 hours after collection.

11.7.1 Resin Samples. The weight of the resin used must be between 0.1 and 4.5 grams. An exact weight must be obtained (within ±1 percent) for each sample. In the case of suspension resins, a volumetric cup can be prepared for holding the required amount of sample. When the cup is used, open the sample bottle, and add the cup volume of resin to the tared sample vial (tared, including septum and aluminum cap). Obtain the exact sample weight, add 100 ml or about two equal drops of water, and immediately seal the vial. Report this value on the data sheet; it is required for calculation of RVCM. In the case of dispersion resins, the cup cannot be used. Weigh the sample in an aluminum dish, transfer the sample to the tared vial, and accurately weigh it in the vial. After prepressurization of the samples, condition them for a minimum of 1 hour in the 90 °C (190 °F) bath. Do not exceed 5 hours. Prepressurization is not required if the sample weight, as analyzed, does not exceed 0.2 gram. It is also not required if solution of the

prepressurization equation yields an absolute prepressurization value that is within 30 percent of the atmospheric pressure.

NOTE: Some aluminum vial caps have a center section that must be removed prior to placing into sample tray. If the cap is not removed, the injection needle will be damaged.

11.7.2 Suspension Resin Slurry and Wet Cake Samples. Decant the water from a wet cake sample, and turn the sample bottle upside down onto a paper towel. Wait for the water to drain, place approximately 0.2 to 4.0 grams of the wet cake sample in a tared vial (tared, including septum and aluminum cap) and seal immediately. Then determine the sample weight (1 percent). All samples weighing over 0.2 gram, must be prepressurized prior to conditioning for 1 hour at 90 °C (190 °F), except as noted in Section 11.7.1. A sample of wet cake is used to determine total solids (TS). This is required for calculating the RVCM.

11.7.3 Dispersion Resin Slurry and Geon Latex Samples. The materials should not be filtered. Sample must be thoroughly mixed. Using a tared vial (tared, including septum and aluminum cap) add approximately eight drops (0.25 to 0.35 g) of slurry or latex using a medicine dropper. This should be done immediately after mixing. Seal the vial as soon as possible. Determine sample weight (1 percent). Condition the vial for 1 hour at 90 °C (190 °F) in the analyzer bath. Determine the TS on the slurry sample (Section 11.10).

11.7.4 In-process Wastewater Samples. Using a tared vial (tared, including septum and aluminum cap) quickly add approximately 1 cc of water using a medicine dropper. Seal the vial as soon as possible. Determine sample weight (1 percent). Condition the vial for 1 hour at 90 °C (190 °F) in the analyzer bath.

11.8 Preparation of Sample Turntable.

11.8.1 Before placing any sample into turntable, be certain that the center section of the aluminum cap has been removed. The numbered sample vials should be placed in the corresponding numbered positions in the turntable. Insert samples in the following order:

11.8.1.1 Positions 1 and 2. Old 2000-ppm standards for conditioning. These are necessary only after the analyzer has not been used for 24 hours or longer.

11.8.1.2 Position 3. 50-ppm standard, freshly prepared.

11.8.1.3 Position 4. 500-ppm standard, freshly prepared.

11.8.1.4 Position 5. 2000-ppm standard, freshly prepared.

11.8.1.5 Position 6. 4000-ppm standard, freshly prepared.

11.8.1.6 Position 7. Sample No. 7 (This is the first sample of the day, but is given as 7 to be consistent with the turntable and the integrator printout.)

11.8.2 After all samples have been positioned, insert the second set of 50-, 500-, 2000-, and 4000-ppm standards. Samples, including standards, must be conditioned in the bath of 90 °C (190 °F) for a minimum of one hour and a maximum of five hours.

11.9 Start Chromatograph Program. When all samples, including standards, have been conditioned at 90 °C (190 °F) for at least one hour, start the analysis program according to the manufacturer's instructions. These instructions must be carefully followed when starting and stopping a program to prevent damage to the dosing assembly.

11.10 Determination of Total Solids. For wet cake, slurry, resin solution, and PVC latex samples, determine TS for each sample by accurately weighing approximately 3 to 4 grams of sample in an aluminum pan before and after placing in a draft oven (105 to 110 °C (221 to 230 °F)). Samples must be dried to constant weight. After first weighing, return the pan to the oven for a short period of time, and then reweigh to verify complete dryness. The TS are then calculated as the final sample weight divided by initial sample weight.

12.0 Calculations and Data Analysis

12.1 Nomenclature.

A_s = Chromatogram area counts of vinyl chloride for the sample, area counts.

A_s = Chromatogram area counts of vinyl chloride for the sample.

C_c = Concentration of vinyl chloride in the standard sample, ppm.

K_p = Henry's Law Constant for VCM in PVC 90 °C, 6.52×10^{-6} g/g/mm Hg.

K_w = Henry's Law Constant for VCM in water 90 °C, 7×10^{-7} g/g/mm Hg.

M_v = Molecular weight of VCM, 62.5 g/mole.

m = Sample weight, g.

P_a = Ambient atmospheric pressure, mm Hg.

R = Gas constant, (62360^3 ml) (mm Hg)/(mole)(°K).

R_f = Response factor in area counts per ppm VCM.

R_s = Response factor, area counts/ppm.

T_l = Ambient laboratory temperature, °K.

TS = Total solids expressed as a decimal fraction.

T_2 = Equilibrium temperature, °K.

V_g = Volume of vapor phase, ml.

$$= V_v - \frac{m(TS)}{1.36} - \frac{m(1-TS)}{0.9653}$$

V_v = Vial volume,^{3} ml.

1.36 = Density of PVC at 90 °C, g/^{3} ml.

0.9653 = Density of water at 90 °C, g/^{3} ml.

12.2 Response Factor. If the calibration curve described in Section 10.3 passes through zero, an average response factor, R_f , may be used to facilitate computation of vinyl chloride sample concentrations.

12.2.1 To compute R_f , first compute a response factor, R_s , for each sample as follows:

$$R_s = \frac{A_s}{C_c} \qquad \text{Eq. 107-2}$$

12.2.2 Sum the individual response factors, and calculate R_f . If the calibration curve does not pass through zero, use the calibration curve to determine each sample concentration.

12.3 Residual Vinyl Chloride Monomer Concentration, (C_{rvc}) or Vinyl Chloride Monomer Concentration. Calculate C_{rvc} in ppm or mg/kg as follows:

$$C_{rvc} = \frac{A_s P_a}{R_f T_1}\left[\frac{M_v V_g}{Rm} + K_p(TS)T_2 K_w(1-TS)T_2\right] \qquad \text{Eq. 107-3}$$

NOTE: Results calculated using these equations represent concentration based on the total sample. To obtain results based on dry PVC content, divide by TS.

13.0 Method Performance

13.1 Range and Sensitivity. The lower limit of detection of vinyl chloride will vary according to the sampling and chromatographic system. The system should be capable of producing a measurement for a 50-ppm vinyl chloride standard that is at least 10 times the standard deviation of the system background noise level.

13.2 An interlaboratory comparison between seven laboratories of three resin samples, each split into three parts, yielded a standard deviation of 2.63 percent for a sample with a mean of 2.09 ppm, 4.16 percent for a sample with a mean of 1.66 ppm, and 5.29 percent for a sample with a mean of 62.66 ppm.

14.0 Pollution Prevention [Reserved]

15.0 Waste Management [Reserved]

16.0 References

1. B.F. Goodrich, Residual Vinyl Chloride Monomer Content of Polyvinyl Chloride Resins, Latex, Wet Cake, Slurry and Water Samples. B.F. Goodrich Chemical Group Standard Test Procedure No. 1005-E. B.F. Goodrich Technical Center, Avon Lake, Ohio. October 8, 1979.

2. Berens, A.R. The Diffusion of Vinyl Chloride in Polyvinyl Chloride. ACS-Division of Polymer Chemistry, Polymer Preprints 15 (2):197. 1974.

3. Berens, A.R. The Diffusion of Vinyl Chloride in Polyvinyl Chloride. ACS-Division of Polymer Chemistry, Polymer Preprints 15 (2):203. 1974.

4. Berens, A.R., *et. al.* Analysis for Vinyl Chloride in PVC Powders by Head-Space Gas Chromatography. Journal of Applied Polymer Science. 19:3169-3172. 1975.

5. Mansfield, R.A. The Evaluation of Henry's Law Constant (Kp) and Water Enhancement in the Perkin-Elmer Multifract F-40 Gas Chromatograph. B.F. Goodrich. Avon Lake, Ohio. February 10, 1978.

17.0 Tables, Diagrams, Flowcharts, and Validation Data [Reserved]

Method 107A—Determination of Vinyl Chloride Content of Solvents, Resin-Solvent Solution, Polyvinyl Chloride Resin, Resin Slurry, Wet Resin, and Latex Samples

Introduction

Performance of this method should not be attempted by persons unfamiliar with the operation of a gas chromatograph (GC) or by those who are unfamiliar with source sampling because knowledge beyond the scope of

this presentation is required. Care must be exercised to prevent exposure of sampling personnel to vinyl chloride, a carcinogen.

1. Applicability and Principle

1.1 Applicability. This is an alternative method and applies to the measurement of the vinyl chloride content of solvents, resin solvent solutions, polyvinyl chloride (PVC) resin, wet cake slurries, latex, and fabricated resin samples. This method is not acceptable where methods from Section 304(h) of the Clean Water Act, 33 U.S.C. 1251 et seq., (the Federal Water Pollution Control Act Amendments of 1972 as amended by the Clean Water Act of 1977) are required.

1.2 Principle. The basis for this method lies in the direct injection of a liquid sample into a chromatograph and the subsequent evaporation of all volatile material into the carrier gas stream of the chromatograph, thus permitting analysis of all volatile material including vinyl chloride.

2. Range and Sensitivity

The lower limit of detection of vinyl chloride in dry PVC resin is 0.2 ppm. For resin solutions, latexes, and wet resin, this limit rises inversely as the nonvolatile (resin) content decreases.

With proper calibration, the upper limit may be extended as needed.

3. Interferences

The chromatograph columns and the corresponding operating parameters herein described normally provide an adequate resolution of vinyl chloride. In cases where resolution interferences are encountered, the chromatograph operator shall select the column and operating parameters best suited to his particular analysis problem, subject to the approval of the Administrator. Approval is automatic, provided that the tester produces confirming data through an adequate supplemental analytical technique, such as analysis with a different column or GC/mass spectroscopy, and has the data available for review by the Administrator.

4. Precision and Reproducibility

A standard sample of latex containing 181.8 ppm vinyl chloride analyzed 10 times by the alternative method showed a standard deviation of 7.5 percent and a mean error of 0.21 percent.

A sample of vinyl chloride copolymer resin solution was analyzed 10 times by the alternative method and showed a standard deviation of 6.6 percent at a level of 35 ppm.

5. Safety

Do not release vinyl chloride to the laboratory atmosphere during preparation of standards. Venting or purging with vinyl chloride monomer (VCM) air mixtures must be held to minimum. When purging is required, the vapor must be routed to outside air. Vinyl chloride, even at low-ppm levels, must never be vented inside the laboratory.

6. Apparatus

6.1 Sampling. The following equipment is required:

6.1.1 Glass Bottles. 16-oz wide mouth wide polyethylene-lined, screw-on tops.

6.1.2 Adhesive Tape. To prevent loosening of bottle tops.

6.2 Sample Recovery. The following equipment is required:

6.2.1 Glass Vials. 20-ml capacity with polycone screw caps.

6.2.2 Analytical Balance. Capable of weighing to ±0.01 gram.

6.2.3 Syringe. 50-microliter size, with removable needle.

6.2.4 Fritted Glass Sparger. Fine porosity.

6.2.5 Aluminum Weighing Dishes.

6.2.6 Sample Roller or Shaker. To help dissolve sample.

6.3 Analysis. The following equipment is required:

6.3.1 Gas Chromatograph. Hewlett Packard Model 5720A or equivalent.

6.3.2 Chromatograph Column. Stainless steel, 6.1 m by 3.2 mm, packed with 20 percent Tergitol E-35 on Chromosorb W AW 60/80 mesh. The analyst may use other columns provided that the precision and accuracy of the analysis of vinyl chloride standards are not impaired and that he has available for review information confirming that there is adequate resolution of the vinyl chloride peak. (Adequate resolution is defined as an area overlap of not more than 10 percent of the vinyl chloride peak by an interfering peak. Calculation of area overlap is explained in Appendix C, Procedure 1: “Determination of Adequate Chromatographic Peak Resolution.”)

6.3.3 Valco Instrument Six-Port Rotary Valve. For column back flush.

6.3.4 Septa. For chromatograph injection port.

6.3.5 Injection Port Liners. For chromatograph used.

6.3.6 Regulators. For required gas cylinders.

6.3.7 Soap Film Flowmeter. Hewlett Packard No. 0101-0113 or equivalent.

6.4 Calibration. The following equipment is required:

6.4.1 Analytical Balance. Capable of weighing to ±0.0001 g.

6.4.2 Erlenmeyer Flask With Glass Stopper. 125 ml.

6.4.3 Pipets. 0.1, 0.5, 1, 5, 10, and 50 ml.

6.4.4 Volumetric Flasks. 10 and 100 ml.

7. Reagents

Use only reagents that are of chromatograph grade.

7.1 Analysis. The following items are required:

7.1.1 Hydrogen Gas. Zero grade.

7.1.2 Nitrogen Gas. Zero grade.

7.1.3 Air. Zero grade.

7.1.4 Tetrahydrofuran (THF). Reagent grade.

Analyze the THF by injecting 10 microliters into the prepared gas chromatograph. Compare the THF chromatogram with that shown in Figure 107A-1. If the chromatogram is comparable to A, the THF should be sparged with pure nitrogen for approximately 2 hours using the fritted glass sparger to attempt to remove the interfering peak. Reanalyze the sparged THF to determine whether the THF is acceptable for use. If the scan is comparable to B, the THF should be acceptable for use in the analysis.

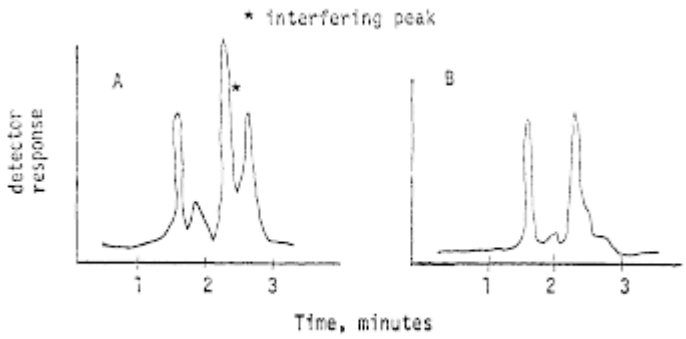

Figure 107A-1

7.1.5 N, N-Dimethylacetamide (DMAC). Spectrographic grade. For use in place of THF.

7.2 Calibration. The following item is required:

7.2.1 Vinyl Chloride 99.9 Percent. Ideal Gas Products lecture bottle, or equivalent. For preparation of standard solutions.

8. Procedure

8.1 Sampling. Allow the liquid or dried resin to flow from a tap on the tank, silo, or pipeline until the tap has been purged. Fill a wide-mouth pint bottle, and immediately tightly cap the bottle. Place an identifying label on each bottle and record the date, time, sample location, and material.

8.2 Sample Treatment. Sample must be run within 24 hours.

8.2.1 Resin Samples. Weigh 9.00 ±0.01 g of THF or DMAC in a tared 20-ml vial. Add 1.00 ±0.01 g of resin to the tared vial containing the THF or DMAC. Close the vial tightly with the screw cap, and shake or otherwise agitate the vial until complete solution of the resin is obtained. Shaking may require several minutes to several hours, depending on the nature of the resin.

8.2.2 Suspension Resin Slurry and Wet Resin Sample. Slurry must be filtered using a small Buchner funnel with vacuum to yield a wet resin sample. The filtering process must be continued only as long as a steady stream of water is exiting from the funnel. Excessive filtration time could result in some loss of VCM. The wet resin sample is weighed into a tared 20-ml vial with THF or DMAC as described earlier for resin samples (8.2.1) and treated the same as the resin sample. A sample of the wet resin is used to determine total solids as required for calculating the residual VCM (Section 8.3.4).

8.2.3 Latex and Resin Solvent Solutions. Samples must be thoroughly mixed. Weigh 1.00 ±0.01 g of the latex or resin-solvent solution into a 20-ml vial containing 9.00 ±0.01 g of THF or DMAC as for the resin samples (8.2.1). Cap and shake until complete solution is obtained. Determine the total solids of the latex or resin solution sample (Section 8.3.4).

8.2.4 Solvents and Non-viscous Liquid Samples. No preparation of these samples is required. The neat samples are injected directly into the GC.

8.3 Analysis.

8.3.1 Preparation of GC. Install the chromatographic column, and condition overnight at 70 °C. Do not connect the exit end of the column to the detector while conditioning.

8.3.1.1 Flow Rate Adjustments. Adjust the flow rate as follows:

a. Nitrogen Carrier Gas. Set regulator on cylinder to read 60 psig. Set column flow controller on the chromatograph using the soap film flowmeter to yield a flow rate of 40 cc/min.

b. Burner Air Supply. Set regulator on the cylinder at 40 psig. Set regulator on the chromatograph to supply air to the burner to yield a flow rate of 250 to 300 cc/min using the flowmeter.

c. Hydrogen. Set regulator on cylinder to read 60 psig. Set regulator on the chromatograph to supply 30 to 40 cc/min using the flowmeter. Optimize hydrogen flow to yield the most sensitive detector response without extinguishing the flame. Check flow with flowmeter and record this flow.

d. Nitrogen Back Flush Gas. Set regulator on the chromatograph using the soap film flowmeter to yield a flow rate of 40 cc/min.

8.3.1.2 Temperature Adjustments. Set temperature as follows:

a. Oven (chromatographic column) at 70 °C.

b. Injection Port at 100 °C.

c. Detector at 300 °C.

8.3.1.3 Ignition of Flame Ionization Detector. Ignite the detector according to the manufacturer's instructions. Allow system to stabilize approximately 1 hour.

8.3.1.4 Recorder. Set pen at zero and start chart drive.

8.3.1.5 Attenuation. Set attenuation to yield desired peak height depending on sample VCM content.

8.3.2 Chromatographic Analyses.

a. Sample Injection. Remove needle from 50-microliter syringe. Open sample vial and draw 50-microliters of THF or DMAC sample recovery solution into the syringe. Recap sample vial. Attach needle to the syringe and while holding the syringe vertically (needle uppermost), eject 40 microliters into an absorbent tissue. Wipe needle with tissue. Now inject 10 microliters into chromatograph system. Repeat the injection until two consecutive values for the height of the vinyl chloride peak do not vary more than 5 percent. Use the average value for these two peak heights to compute the sample concentration.

b. Back Flush. After 4 minutes has elapsed after sample injection, actuate the back flush valve to purge the first 4 feet of the chromatographic column of solvent and other high boilers.

c. Sample Data. Record on the chromatograph strip chart the data from the sample label.

d. Elution Time. Vinyl chloride elutes at 2.8 minutes. Acetaldehyde elutes at 3.7 minutes. Analysis is considered complete when chart pen becomes stable. After 5 minutes, reset back flush valve and inject next sample.

8.3.3 Chromatograph Servicing.

a. Septum. Replace after five sample injections.

b. Sample Port Liner. Replace the sample port liner with a clean spare after five sample injections.

c. Chromatograph Shutdown. If the chromatograph has been shut down overnight, rerun one or more samples from the preceding day to test stability and precision prior to starting on the current day's work.

8.3.4 Determination of Total Solids (TS). For wet resin, resin solution, and PVC latex samples, determine the TS for each sample by accurately weighing approximately 3 to 5 grams of sample into a tared aluminum pan. The initial procedure is as follows:

a. Where water is the major volatile component: Tare the weighing dish, and add 3 to 5 grams of sample to the dish. Weigh to the nearest milligram.

b. Where volatile solvent is the major volatile component: Transfer a portion of the sample to a 20-ml screw cap vial and cap immediately. Weigh the vial to the nearest milligram. Uncap the vial and transfer a 3- to 5-gram portion of the sample to a tared aluminum weighing dish. Recap the vial and reweigh to the nearest milligram. The vial weight loss is the sample weight.

To continue, place the weighing pan in a 130 °C oven for 1 hour. Remove the dish and allow to cool to room temperature in a desiccator. Weigh the pan to the nearest 0.1 mg. Total solids is the weight of material in the aluminum pan after heating divided by the net weight of sample added to the pan originally times 100.

9. Calibration of the Chromatograph

9.1 Preparation of Standards. Prepare a 1 percent by weight (approximate) solution of vinyl chloride in THF or DMAC by bubbling vinyl chloride gas from a cylinder into a tared 125-ml glass-stoppered flask containing THF or DMAC. The weight of vinyl chloride to be added should be calculated prior to this operation, i.e., 1 percent of the weight of THF or DMAC contained in the tared flask. This must be carried out in a laboratory hood. Adjust the vinyl chloride flow from the cylinder so that the vinyl chloride dissolves essentially completely in the THF or DMAC and is not blown to the atmosphere. Take particular care not to volatize any of the solution. Stopper the flask and swirl the solution to effect complete mixing. Weigh the stoppered flask to nearest 0.1 mg to determine the exact amount of vinyl chloride added.

Pipet 10 ml of the approximately 1 percent solution into a 100-ml glass-stoppered volumetric flask, and add THF or DMAC to fill to the mark. Cap the flask and invert 10 to 20 times. This solution contains approximately 1,000 ppm by weight of vinyl chloride (note the exact concentration).

Pipet 50-, 10-, 5-, 1-, 0.5-, and 0.1-ml aliquots of the approximately 1,000 ppm solution into 10 ml glass stoppered volumetric flasks. Dilute to the mark with THF or DMAC, cap the flasks and invert each 10 to 20 times. These solutions contain approximately 500, 100, 50, 10, 5, and 1 ppm vinyl chloride. Note the exact concentration of each one. These standards are to be kept under refrigeration in stoppered bottles, and must be renewed every 3 months.

9.2 Preparation of Chromatograph Calibration Curve.

Obtain the GC for each of the six final solutions prepared in Section 9.1 by using the procedure in Section 8.3.2. Prepare a chart plotting peak height obtained from the chromatogram of each solution versus the known concentration. Draw a straight line through the points derived by the least squares method.

10. Calculations

10.1 Response Factor. From the calibration curve described in Section 9.2, select the value of C_c that corresponds to H_c for each sample. Compute the response factor, R_f , for each sample as follows:

$$R_f = \frac{C_c}{H_c} \qquad \text{Eq. 107A-1}$$

where:

R_f =Chromatograph response factor, ppm/mm.

C_c =Concentration of vinyl chloride in the standard sample, ppm.

H_c =Peak height of the standard sample, mm.

10.2 Residual vinyl chloride monomer concentration (C_{rvc}) or vinyl chloride monomer concentration in resin:

$$C_{rvc} = 10 H_s R_f \qquad \text{Eq. 107A-2}$$

Where:

C_{rvc} =Concentration of residual vinyl chloride monomer, ppm.

H_s =Peak height of sample, mm.

R_f =Chromatograph response factor.

10.3 Samples containing volatile material, i.e., resin solutions, wet resin, and latexes:

$$C_{rvc} = \frac{H_s R_f (1,000)}{TS} \qquad \text{Eq. 107A-3}$$

where:

TS=Total solids in the sample, weight fraction.

10.4 Samples of solvents and in process wastewater:

$$C_{rvc} = \frac{H_s R_f}{0.888} \qquad \text{Eq. 107A-4}$$

Where:

0.888=Specific gravity of THF.

11. Bibliography

1. Communication from R. N. Wheeler, Jr.; Union Carbide Corporation. Part 61 National Emissions Standards for Hazardous Air Pollutants appendix B, Method 107—Alternate Method, September 19, 1977.

Method 108—Determination of Particulate and Gaseous Arsenic Emissions

NOTE: This method does not include all of the specifications (*e.g.,* equipment and supplies) and procedures (*e.g.,* sampling and analytical) essential to its performance. Some material is incorporated by reference from other methods in appendix A to 40 CFR part 60. Therefore, to obtain reliable results, persons using this method should have a thorough knowledge of at least the following additional test methods: Method 1, Method 2, Method 3, Method 5, and Method 12.

1.0 Scope and Application.

1.1 Analytes.

Analyte	CAS No.	Sensitivity
Arsenic compounds as arsenic (As)	7440-38-2	Lower limit 10 µg/ml or less.

1.2 Applicability. This method is applicable for the determination of inorganic As emissions from stationary sources as specified in an applicable subpart of the regulations.

1.3 Data Quality Objectives. Adherence to the requirements of this method will enhance the quality of the data obtained from air pollutant sampling methods.

2.0 Summary of Method

Particulate and gaseous As emissions are withdrawn isokinetically from the source and are collected on a glass mat filter and in water. The collected arsenic is then analyzed by means of atomic absorption spectrophotometry (AAS).

3.0 Definitions. [Reserved]

4.0 Interferences

Analysis for As by flame AAS is sensitive to the chemical composition and to the physical properties (*e.g.,* viscosity, pH) of the sample. The analytical procedure includes a check for matrix effects (Section 11.5).

5.0 Safety

5.1 This method may involve hazardous materials, operations, and equipment. This test method may not address all of the safety problems associated with its use. It is the responsibility of the user to establish appropriate safety and health practices and determine the applicability of regulatory limitations prior to performing this test method.

5.2 Corrosive reagents. The following reagents are hazardous. Personal protective equipment and safe procedures that prevent chemical splashes are recommended. If contact occurs, immediately flush with copious amounts of water for at least 15 minutes. Remove clothing under shower and decontaminate. Treat residual chemical burns as thermal burns.

5.2.1 Hydrochloric Acid (HCl). Highly corrosive liquid with toxic vapors. Vapors are highly irritating to eyes, skin, nose, and lungs, causing severe damage. May cause bronchitis, pneumonia, or edema of lungs. Exposure to concentrations of 0.13 to 0.2 percent can be lethal to humans in a few minutes. Provide ventilation to limit exposure. Reacts with metals, producing hydrogen gas.

5.2.2 Hydrogen Peroxide (H_2O_2). Very harmful to eyes. 30% H_2O_2 can burn skin, nose, and lungs.

5.2.3 Nitric Acid (HNO_3). Highly corrosive to eyes, skin, nose, and lungs. Vapors are highly toxic and can cause bronchitis, pneumonia, or edema of lungs. Reaction to inhalation may be delayed as long as 30 hours and still be fatal. Provide ventilation to limit exposure. Strong oxidizer. Hazardous reaction may occur with organic materials such as solvents.

5.2.4 Sodium Hydroxide (NaOH). Causes severe damage to eyes and skin. Inhalation causes irritation to nose, throat, and lungs. Reacts exothermically with small amounts of water.

6.0 Equipment and Supplies

6.1 Sample Collection. A schematic of the sampling train used in performing this method is shown in Figure 108-1; it is similar to the Method 5 sampling train of 40 CFR part 60, appendix A. The following items are required for sample collection:

6.1.1 Probe Nozzle, Probe Liner, Pitot Tube, Differential Pressure Gauge, Filter Holder, Filter Heating System, Temperature Sensor, Metering System, Barometer, and Gas Density Determination Equipment. Same as Method 5, Sections 6.1.1.1 to 6.1.1.7, 6.1.1.9, 6.1.2, and 6.1.3, respectively.

6.1.2 Impingers. Four impingers connected in series with leak-free ground-glass fittings or any similar leak-free noncontaminating fittings. For the first, third, and fourth impingers, use the Greenburg-Smith design, modified by replacing the tip with a 1.3-cm ID (0.5-in.) glass tube extending to about 1.3 cm (0.5 in.) from the bottom of the flask. For the second impinger, use the Greenburg-Smith design with the standard tip. Modifications (*e.g.,* flexible connections between the impingers, materials other than glass, or flexible vacuum lines to connect the filter holder to the condenser) are subject to the approval of the Administrator.

6.1.3 Temperature Sensor. Place a temperature sensor, capable of measuring temperature to within 1 °C (2 °F), at the outlet of the fourth impinger for monitoring purposes.

6.2 Sample Recovery. The following items are required for sample recovery:

6.2.1 Probe-Liner and Probe-Nozzle Brushes, Petri Dishes, Graduated Cylinder and/or Balance, Plastic Storage Containers, and Funnel and Rubber Policeman. Same as Method 5, Sections 6.2.1 and 6.2.4 to 6.2.8, respectively.

6.2.2 Wash Bottles. Polyethylene (2).

6.2.3 Sample Storage Containers. Chemically resistant, polyethylene or polypropylene for glassware washes, 500- or 1000-ml.

6.3 Analysis. The following items are required for analysis:

6.3.1 Spectrophotometer. Equipped with an electrodeless discharge lamp and a background corrector to measure absorbance at 193.7 nanometers (nm). For measuring samples having less than 10 µg As/ml, use a vapor generator accessory or a graphite furnace.

6.3.2 Recorder. To match the output of the spectrophotometer.

6.3.3 Beakers. 150 ml.

6.3.4 Volumetric Flasks. Glass 50-, 100-, 200-, 500-, and 1000-ml; and polypropylene, 50-ml.

6.3.5 Balance. To measure within 0.5 g.

6.3.6 Volumetric Pipets. 1-, 2-, 3-, 5-, 8-, and 10-ml.

6.3.7 Oven.

6.3.8 Hot Plate.

7.0 Reagents and Standards

Unless otherwise indicated, it is intended that all reagents conform to the specifications established by the Committee on Analytical Reagents of the American Chemical Society, where such specifications are available; otherwise, use the best available grade.

7.1 The following reagents are required for sample collection:

7.1.1 Filters. Same as Method 5, Section 7.1.1, except that the filters need not be unreactive to SO_2 .

7.1.2 Silica Gel, Crushed Ice, and Stopcock Grease. Same as Method 5, Sections 7.1.2, 7.1.4, and 7.1.5, respectively.

7.1.3 Water. Deionized distilled to meet ASTM D 1193-77 or 91 (incorporated by reference-see § 61.18), Type 3. When high concentrations of organic matter are not expected to be present, the $KMnO_4$ test for oxidizable organic matter may be omitted.

7.2 Sample Recovery.

7.2.1 0.1 N NaOH. Dissolve 4.00 g of NaOH in about 500 ml of water in a 1-liter volumetric flask. Then, dilute to exactly 1.0 liter with water.

7.3 Analysis. The following reagents and standards are required for analysis:

7.3.1 Water. Same as Section 7.1.3.

7.3.2 Sodium Hydroxide, 0.1 N. Same as in Section 7.2.1.

7.3.3 Sodium Borohydride ($NaBH_4$), 5 Percent Weight by Volume (W/V). Dissolve 50.0 g of $NaBH_4$ in about 500 ml of 0.1 N NaOH in a 1-liter volumetric flask. Then, dilute to exactly 1.0 liter with 0.1 N NaOH.

7.3.4 Hydrochloric Acid, Concentrated.

7.3.5 Potassium Iodide (KI), 30 Percent (W/V). Dissolve 300 g of KI in 500 ml of water in a 1 liter volumetric flask. Then, dilute to exactly 1.0 liter with water.

7.3.6 Nitric Acid, Concentrated.

7.3.7 Nitric Acid, 0.8 N. Dilute 52 ml of concentrated HNO_3 to exactly 1.0 liter with water.

7.3.8 Nitric Acid, 50 Percent by Volume (V/V). Add 50 ml concentrated HNO_3 to 50 ml water.

7.3.9 Stock Arsenic Standard, 1 mg As/ml. Dissolve 1.3203 g of primary standard grade $As_2 O_3$ in 20 ml of 0.1 N NaOH in a 150 ml beaker. Slowly add 30 ml of concentrated HNO_3 . Heat the resulting solution and evaporate just to dryness. Transfer the residue quantitatively to a 1-liter volumetric flask, and dilute to 1.0 liter with water.

7.3.10 Arsenic Working Solution, 1.0 µg As/ml. Pipet exactly 1.0 ml of stock arsenic standard into an acid-cleaned, appropriately labeled 1-liter volumetric flask containing about 500 ml of water and 5 ml of concentrated HNO_3 . Dilute to exactly 1.0 liter with water.

7.3.11 Air. Suitable quality for AAS analysis.

7.3.12 Acetylene. Suitable quality for AAS analysis.

7.3.13 Nickel Nitrate, 5 Percent Ni (W/V). Dissolve 24.780 g of nickel nitrate hexahydrate [$Ni(NO_3)_2 6H_2 O$] in water in a 100-ml volumetric flask, and dilute to 100 ml with water.

7.3.14 Nickel Nitrate, 1 Percent Ni (W/V). Pipet 20 ml of 5 percent nickel nitrate solution into a 100-ml volumetric flask, and dilute to exactly 100 ml with water.

7.3.15 Hydrogen Peroxide, 3 Percent by Volume. Pipet 50 ml of 30 percent H_2O_2 into a 500-ml volumetric flask, and dilute to exactly 500 ml with water.

8.0 Sample Collection, Preservation, Transport, and Storage

8.1 Pretest Preparation. Follow the general procedure given in Method 5, Section 8.1, except the filter need not be weighed, and the 200 ml of 0.1N NaOH and Container 4 should be tared to within 0.5 g.

8.2 Preliminary Determinations. Follow the general procedure given in Method 5, Section 8.2, except select the nozzle size to maintain isokinetic sampling rates below 28 liters/min (1.0 cfm).

8.3 Preparation of Sampling Train. Follow the general procedure given in Method 5, Section 8.3.

8.4 Leak-Check Procedures. Same as Method 5, Section 8.4.

8.5 Sampling Train Operation. Follow the general procedure given in Method 5, Section 8.5, except maintain isokinetic sampling flow rates below 28 liters/min (1.0 cfm). For each run, record the data required on a data sheet similar to the one shown in Figure 108-2.

8.6 Calculation of Percent Isokinetic. Same as Method 5, Section 8.6.

8.7 Sample Recovery. Same as Method 5, Section 8.7, except that 0.1 N NaOH is used as the cleanup solvent instead of acetone and that the impinger water is treated as follows:

8.7.1 Container Number 4 (Impinger Water). Clean each of the first three impingers and connecting glassware in the following manner:

8.7.1.1 Wipe the impinger ball joints free of silicone grease, and cap the joints.

8.7.1.2 Rotate and agitate each of the first two impingers, using the impinger contents as a rinse solution.

8.7.1.3 Transfer the liquid from the first three impingers to Container Number 4. Remove the outlet ball-joint cap, and drain the contents through this opening. Do not separate the impinger parts (inner and outer tubes) while transferring their contents to the container.

8.7.1.4 Weigh the contents of Container No. 4 to within 0.5 g. Record in the log the weight of liquid along with a notation of any color or film observed in the impinger catch. The weight of liquid is needed along with the silica gel data to calculate the stack gas moisture content.

NOTE: Measure and record the total amount of 0.1 N NaOH used for rinsing under Sections 8.7.1.5 and 8.7.1.6.

8.7.1.5 Pour approximately 30 ml of 0.1 NaOH into each of the first two impingers, and agitate the impingers. Drain the 0.1 N NaOH through the outlet arm of each impinger into Container Number 4. Repeat this operation a second time; inspect the impingers for any abnormal conditions.

8.7.1.6 Wipe the ball joints of the glassware connecting the impingers and the back half of the filter holder free of silicone grease, and rinse each piece of glassware twice with 0.1 N NaOH; transfer this rinse into Container Number 4. (DO NOT RINSE or brush the glass-fritted filter support.) Mark the height of the fluid level to determine whether leakage occurs during transport. Label the container to identify clearly its contents.

8.8 Blanks.

8.8.1 Sodium Hydroxide. Save a portion of the 0.1 N NaOH used for cleanup as a blank. Take 200 ml of this solution directly from the wash bottle being used and place it in a plastic sample container labeled “NaOH blank.”

8.8.2 Water. Save a sample of the water, and place it in a container labeled "H_2O blank."

8.8.3 Filter. Save two filters from each lot of filters used in sampling. Place these filters in a container labeled "filter blank."

9.0 Quality Control

9.1 Miscellaneous Quality Control Measures.

Section	Quality control measure	Effect
8.4, 10.1	Sampling equipment leak-checks and calibration	Ensures accuracy and precision of sampling measurements.
10.4	Spectrophotometer calibration	Ensures linearity of spectrophotometer response to standards.
11.5	Check for matrix effects	Eliminates matrix effects.

9.2 Volume Metering System Checks. Same as Method 5, Section 9.2.

10.0 Calibration and Standardization

NOTE: Maintain a laboratory log of all calibrations.

10.1 Sampling Equipment. Same as Method 5, Section 10.0.

10.2 Preparation of Standard Solutions.

10.2.1 For the high level procedure, pipet 1, 3, 5, 8, and 10 ml of the 1.0 mg As/ml stock solution into separate 100 ml volumetric flasks, each containing 5 ml of concentrated HNO_3 . Dilute to the mark with water.

10.2.2 For the low level vapor generator procedure, pipet 1, 2, 3, and 5 ml of 1.0 µg As/ml standard solution into separate reaction tubes. Dilute to the mark with water.

10.2.3 For the low level graphite furnace procedure, pipet 1, 5, 10 and 15 ml of 1.0 µg As/ml standard solution into separate flasks along with 2 ml of the 5 percent nickel nitrate solution and 10 ml of the 3 percent H_2O_2 solution. Dilute to the mark with water.

10.3 Calibration Curve. Analyze a 0.8 N HNO_3 blank and each standard solution according to the procedures outlined in section 11.4.1. Repeat this procedure on each standard solution until two consecutive peaks agree within 3 percent of their average value. Subtract the average peak height (or peak area) of the blank—which must be less than 2 percent of recorder full scale—from the averaged peak height of each standard solution. If the blank absorbance is greater than 2 percent of full-scale, the probable cause is As contamination of a reagent or carry-over of As from a previous sample. Prepare the calibration curve by plotting the corrected peak height of each standard solution versus the corresponding final total As weight in the solution.

10.4 Spectrophotometer Calibration Quality Control. Calculate the least squares slope of the calibration curve. The line must pass through the origin or through a point no further from the origin than ±2 percent of the recorder full scale. Multiply the corrected peak height by the reciprocal of the least squares slope to determine the distance each calibration point lies from the theoretical calibration line. The difference between the calculated concentration values and the actual concentrations (*e.g.,* 1, 3, 5, 8, and 10 mg As for the high-level procedure) must be less than 7 percent for all standards.

NOTE: For instruments equipped with direct concentration readout devices, preparation of a standard curve will not be necessary. In all cases, follow calibration and operational procedures in the manufacturers' instruction manual.

11.0 Analytical Procedure

11.1 Sample Loss Check. Prior to analysis, check the liquid level in Containers Number 2 and Number 4. Note on the analytical data sheet whether leakage occurred during transport. If a noticeable amount of leakage occurred, either void the sample or take steps, subject to the approval of the Administrator, to adjust the final results.

11.2 Sample Preparation.

11.2.1 Container Number 1 (Filter). Place the filter and loose particulate matter in a 150 ml beaker. Also, add the filtered solid material from Container Number 2 (see Section 11.2.2). Add 50 ml of 0.1 N NaOH. Then stir and warm on a hot plate at low heat (do not boil) for about 15 minutes. Add 10 ml of concentrated HNO_3 , bring to a boil, then simmer for about 15 minutes. Filter the solution through a glass fiber filter. Wash with hot water, and catch the filtrate in a clean 150 ml beaker. Boil the filtrate, and evaporate to dryness. Cool, add 5 ml of 50 percent HNO_3 , and then warm and stir. Allow to cool. Transfer to a 50-ml volumetric flask, dilute to volume with water, and mix well.

11.2.2 Container Number 2 (Probe Wash).

11.2.2.1 Filter (using a glass fiber filter) the contents of Container Number 2 into a 200 ml volumetric flask. Combine the filtered (solid) material with the contents of Container Number 1 (Filter).

11.2.2.2 Dilute the filtrate to exactly 200 ml with water. Then pipet 50 ml into a 150 ml beaker. Add 10 ml of concentrated HNO_3 , bring to a boil, and evaporate to dryness. Allow to cool, add 5 ml of 50 percent HNO_3 , and then warm and stir. Allow the solution to cool, transfer to a 50-ml volumetric flask, dilute to volume with water, and mix well.

11.2.3 Container Number 4 (Impinger Solution). Transfer the contents of Container Number 4 to a 500 ml volumetric flask, and dilute to exactly 500-ml with water. Pipet 50 ml of the solution into a 150-ml beaker. Add 10 ml of concentrated HNO_3 , bring to a boil, and evaporate to dryness. Allow to cool, add 5 ml of 50 percent HNO_3 , and then warm and stir. Allow the solution to cool, transfer to a 50-ml volumetric flask, dilute to volume with water, and mix well.

11.2.4 Filter Blank. Cut each filter into strips, and treat each filter individually as directed in Section 11.2.1, beginning with the sentence, “Add 50 ml of 0.1 N NaOH.”

11.2.5 Sodium Hydroxide and Water Blanks. Treat separately 50 ml of 0.1 N NaOH and 50 ml water, as directed under Section 11.2.3, beginning with the sentence, “Pipet 50 ml of the solution into a 150-ml beaker.”

11.3 Spectrophotometer Preparation. Turn on the power; set the wavelength, slit width, and lamp current. Adjust the background corrector as instructed by the manufacturer's manual for the particular atomic absorption spectrophotometer. Adjust the burner and flame characteristics as necessary.

11.4 Analysis. Calibrate the analytical equipment and develop a calibration curve as outlined in Sections 10.2 through 10.4.

11.4.1 Arsenic Samples. Analyze an appropriately sized aliquot of each diluted sample (from Sections 11.2.1 through 11.2.3) until two consecutive peak heights agree within 3 percent of their average value. If applicable, follow the procedures outlined in Section 11.4.1.1. If the sample concentration falls outside the range of the calibration curve, make an appropriate dilution with 0.8 N HNO_3 so that the final concentration falls within the range of the curve. Using the calibration curve, determine the arsenic concentration in each sample fraction.

NOTE: Because instruments vary between manufacturers, no detailed operating instructions will be given here. Instead, the instrument manufacturer's detailed operating instructions should be followed.

11.4.1.1 Arsenic Determination at Low Concentration. The lower limit of flame AAS is 10 µg As/ml. If the arsenic concentration of any sample is at a lower level, use the graphite furnace or vapor generator which is available as an accessory component. Flame, graphite furnace, or vapor generators may be used for samples whose concentrations are between 10 and 30 µg/ml. Follow the manufacturer's instructions in the use of such equipment.

11.4.1.1.1 Vapor Generator Procedure. Place a sample containing between 0 and 5 µg of arsenic in the reaction tube, and dilute to 15 ml with water. Since there is some trial and error involved in this procedure, it may be necessary to screen the samples by conventional atomic absorption until an approximate concentration is determined. After determining the approximate concentration, adjust the volume of the sample accordingly. Pipet 15 ml of concentrated HCl into each tube. Add 1 ml of 30 percent KI solution. Place the reaction tube into a 50 °C (120 °F) water bath for 5 minutes. Cool to room temperature. Connect the reaction tube to the vapor generator assembly. When the instrument response has returned to baseline, inject 5.0 ml of 5 percent $NaBH_4$, and integrate the resulting spectrophotometer signal over a 30-second time period.

11.4.1.1.2 Graphite Furnace Procedure. Dilute the digested sample so that a 5 ml aliquot contains less than 1.5 µg of arsenic. Pipet 5 ml of this digested solution into a 10-ml volumetric flask. Add 1 ml of the 1 percent nickel nitrate solution, 0.5 ml of 50 percent HNO_3 , and 1 ml of the 3 percent hydrogen peroxide and dilute to 10 ml with water. The sample is now ready for analysis.

11.4.1.2 Run a blank (0.8 N HNO_3) and standard at least after every five samples to check the spectrophotometer calibration. The peak height of the blank must pass through a point no further from the origin than ±2 percent of the recorder full scale. The difference between the measured concentration of the standard (the product of the corrected average peak height and the reciprocal of the least squares slope) and the actual concentration of the standard must be less than 7 percent, or recalibration of the analyzer is required.

11.4.1.3 Determine the arsenic concentration in the filter blank (i.e., the average of the two blank values from each lot).

11.4.2 Container Number 3 (Silica Gel). This step may be conducted in the field. Weigh the spent silica gel (or silica gel plus impinger) to the nearest 0.5 g; record this weight.

11.5 Check for matrix effects on the arsenic results. Same as Method 12, Section 11.5.

12.0 Data Analysis and Calculations

12.1 Nomenclature

B_{ws} = Water in the gas stream, proportion by volume.

C_a = Concentration of arsenic as read from the standard curve, µg/ml.

C_s = Arsenic concentration in stack gas, dry basis, converted to standard conditions, g/dsm^3 (gr/dscf).

E_a = Arsenic mass emission rate, g/hr (lb/hr).

F_d = Dilution factor (equals 1 if the sample has not been diluted).

I = Percent of isokinetic sampling.

m_{bi} = Total mass of all four impingers and contents before sampling, g.

m_{fi} = Total mass of all four impingers and contents after sampling, g.

m_n = Total mass of arsenic collected in a specific part of the sampling train, µg.

m_t = Total mass of arsenic collected in the sampling train, µg.

T_m = Absolute average dry gas meter temperature (*see* Figure 108-2), °K (°R).

V_m = Volume of gas sample as measured by the dry gas meter, dry basis, m^3 (ft^3).

$V_{m(std)}$ = Volume of gas sample as measured by the dry gas meter, corrected to standard conditions, m^3 (ft^3).

V_n = Volume of solution in which the arsenic is contained, ml.

$V_{w(std)}$ = Volume of water vapor collected in the sampling train, corrected to standard conditions, m^3 (ft^3).

ΔH = Average pressure differential across the orifice meter (*see* Figure 108-2), mm H_2O (in. H_2O).

12.2 Average Dry Gas Meter Temperatures (T_m) and Average Orifice Pressure Drop (ΔH). See data sheet (Figure 108-2).

12.3 Dry Gas Volume. Using data from this test, calculate $V_{m(std)}$ according to the procedures outlined in Method 5, Section 12.3.

12.4 Volume of Water Vapor.

$$V_{w(std)} = K_2\left(m_{fi} - m_{bi}\right) \qquad \text{Eq. 108-1}$$

Where:

K_2 = 0.001334 m^3 /g for metric units.

= 0.047012 ft^3 /g for English units.

12.5 Moisture Content.

$$B_{ws} = \frac{V_{w(std)}}{V_{m(std)} + V_{w(std)}} \qquad \text{Eq. 108-2}$$

12.6 Amount of Arsenic Collected.

12.6.1 Calculate the amount of arsenic collected in each part of the sampling train, as follows:

$$m_n = C_a F_d V_n \qquad \text{Eq. 108-3}$$

12.6.2 Calculate the total amount of arsenic collected in the sampling train as follows:

$$m_t = m_{(\text{filters})} + m_{(\text{probe})} + m_{(\text{impingers})} - m_{(\text{filter blank})} - m_{(\text{NaOH blank})} - m_{(\text{water blank})} \qquad \text{Eq. 108-4}$$

12.7 Calculate the arsenic concentration in the stack gas (dry basis, adjusted to standard conditions) as follows:

$$C_s = K_3\left(m_t / V_{m(std)}\right) \qquad \text{Eq. 108-5}$$

Where:

$K_3 = 10^{-6}$ g/µg for metric units

$= 1.54 \times 10^{-5}$ gr/µg for English units

12.8 Stack Gas Velocity and Volumetric Flow Rate. Calculate the average stack gas velocity and volumetric flow rate using data obtained in this method and the equations in Sections 12.2 and 12.3 of Method 2.

12.9 Pollutant Mass Rate. Calculate the arsenic mass emission rate as follows:

$$E_a = C_s Q_{sd} \qquad \text{Eq. 108-6}$$

12.10 Isokinetic Variation. Same as Method 5, Section 12.11.

13.0 Method Performance

13.1 Sensitivity. The lower limit of flame AAS 10 µg As/ml. The analytical procedure includes provisions for the use of a graphite furnace or vapor generator for samples with a lower arsenic concentration.

14.0 Pollution Prevention. [Reserved]

15.0 Waste Management. [Reserved]

16.0 References.

Same as References 1 through 9 of Method 5, Section 17.0, with the addition of the following:

1. Perkin Elmer Corporation. Analytical Methods for Atomic Absorption Spectrophotometry. 303-0152. Norwalk, Connecticut. September 1976. pp. 5-6.

2. Standard Specification for Reagent Water. In: Annual Book of American Society for Testing and Materials Standards. Part 31: Water, Atmospheric Analysis. American Society for Testing and Materials. Philadelphia, PA. 1974. pp. 40-42.

3. Stack Sampling Safety Manual (Draft). U.S. Environmental Protection Agency, Office of Air Quality Planning and Standard, Research Triangle Park, NC. September 1978.

17.0 Tables, Diagrams, Flowcharts, and Validation Data

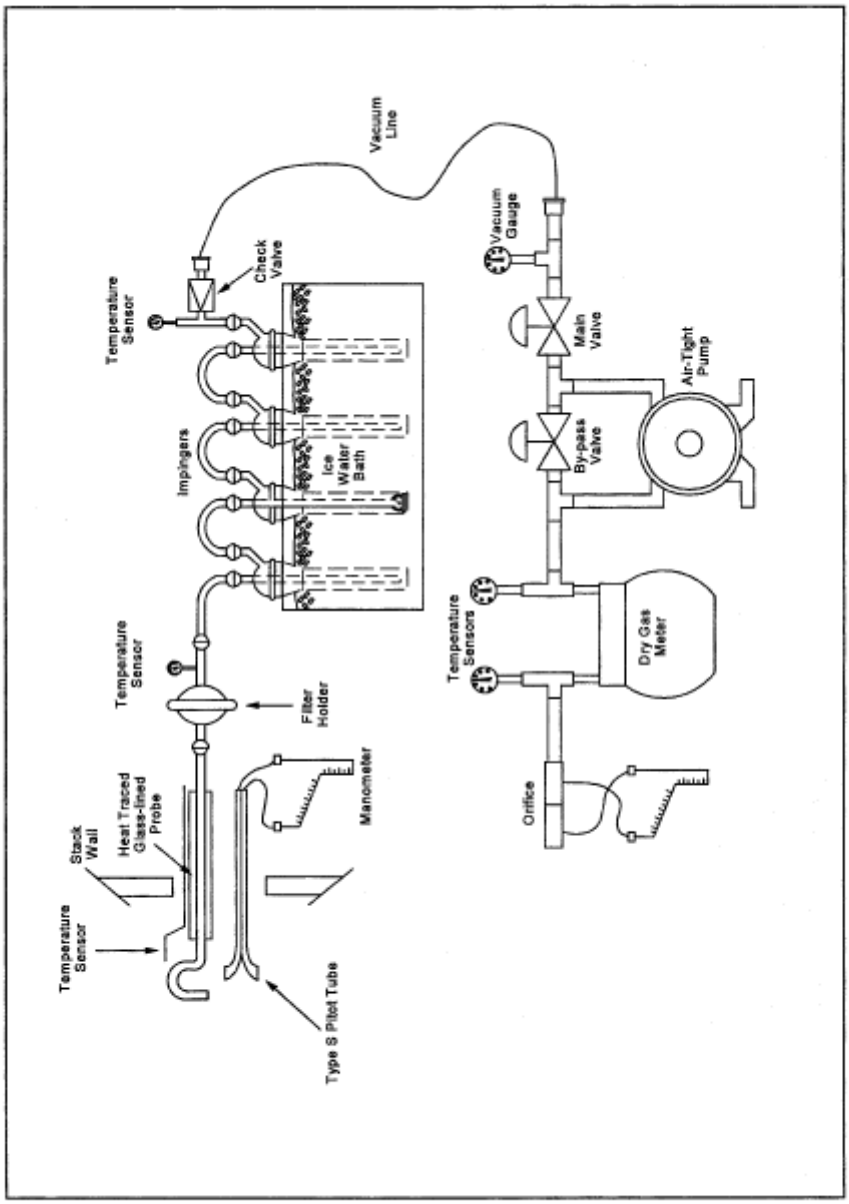

Figure 108-1. Arsenic Sampling Train

Plant _____
Location _____
Operator _____
Date _____
Run No. _____
Sample box No. _____
Meter box No. _____
Meter $\Delta H@$ _____
C factor _____
Pitot tube coefficient, C_p _____

SCHEMATIC OF STACK CROSS SECTION

Ambient temperature _____
Barometric pressure _____
Assumed moisture, % _____
Probe length, (ft.) _____
Nozzle identification No. _____
Average calibrated nozzle diameter, (in.) _____
Probe heater setting _____
Leak rate, (cfm) _____
Probe liner material _____

Traverse point number	Sampling time	Vacuum	Stack temperature	Velocity head	Pressure differential across orifice meter	Gas meter reading	Gas sample temperature at dry gas meter		Filter temperature	Temperature of gas leaving condenser or last impinger
							Inlet	Outlet		
	min.	(in.Hg)	(T_s) (°F)	(ΔP_s) (in. H_2O)	(in. H_2O)	(ft^3)	(°F)	(°F)	(°F)	(°F)
Total							Avg.	Avg.		
Average							Avg.			

Figure 108-2. Arsenic Field Data Sheet.

Method 108A—Determination of Arsenic Content in Ore Samples From Nonferrous Smelters

NOTE: This method does not include all of the specifications (*e.g.,* equipment and supplies) and procedures (*e.g.,* sampling and analytical) essential to its performance. Some material is incorporated by reference from other methods in appendix A to 40 CFR part 60. Therefore, to obtain reliable results, persons using this method should have a thorough knowledge of Method 12.

1.0 Scope and Application

1.1 Analytes.

Analyte	CAS No.	Sensitivity
Arsenic compounds as arsenic (As)	7440-38-2	Lower limit 10 µg/ml or less.

1.2 Applicability. This method applies to the determination of inorganic As content of process ore and reverberatory matte samples from nonferrous smelters and other sources as specified in an applicable subpart of the regulations.

1.3 Data Quality Objectives. Adherence to the requirements of this method will enhance the quality of the data obtained from air pollutant sampling methods.

2.0 Summary of Method

Arsenic bound in ore samples is liberated by acid digestion and analyzed by flame atomic absorption spectrophotometry (AAS).

3.0 Definitions [Reserved]

4.0 Interferences

Analysis for As by flame AAS is sensitive to the chemical composition and to the physical properties (*e.g.,* viscosity, pH) of the sample. The analytical procedure includes a check for matrix effects (section 11.5).

5.0 Safety

5.1 Disclaimer. This method may involve hazardous materials, operations, and equipment. This test method may not address all of the safety problems associated with its use. It is the responsibility of the user to establish appropriate safety and health practices and determine the applicability of regulatory limitations prior to performing this test method.

5.2 Corrosive Reagents. The following reagents are hazardous. Personal protective equipment and safe procedures that prevent chemical splashes are recommended. If contact occurs, immediately flush with copious amounts of water for at least 15 minutes. Remove clothing under shower and decontaminate. Treat residual chemical burns as thermal burns.

5.2.1 Hydrochloric Acid (HCl). Highly corrosive liquid with toxic vapors. Vapors are highly irritating to eyes, skin, nose, and lungs, causing severe damage. May cause bronchitis, pneumonia, or edema of lungs. Exposure to concentrations of 0.13 to 0.2 percent can be lethal to humans in a few minutes. Provide ventilation to limit exposure. Reacts with metals, producing hydrogen gas.

5.2.2 Hydrofluoric Acid (HF). Highly corrosive to eyes, skin, nose, throat, and lungs. Reaction to exposure may be delayed by 24 hours or more. Provide ventilation to limit exposure.

5.2.3 Hydrogen Peroxide (H_2O_2). Very harmful to eyes. 30% H_2O_2 can burn skin, nose, and lungs.

5.2.4 Nitric Acid (HNO_3). Highly corrosive to eyes, skin, nose, and lungs. Vapors are highly toxic and can cause bronchitis, pneumonia, or edema of lungs. Reaction to inhalation may be delayed as long as 30 hours and still be fatal. Provide ventilation to limit exposure. Strong oxidizer. Hazardous reaction may occur with organic materials such as solvents.

5.2.5 Sodium Hydroxide (NaOH). Causes severe damage to eyes and skin. Inhalation causes irritation to nose, throat, and lungs. Reacts exothermically with limited amounts of water.

6.0 Equipment and Supplies

6.1 Sample Collection and Preparation. The following items are required for sample collection and preparation:

6.1.1 Parr Acid Digestion Bomb. Stainless steel with vapor-tight Teflon cup and cover.

6.1.2 Volumetric Pipets. 2- and 5-ml sizes.

6.1.3 Volumetric Flask. 50-ml polypropylene with screw caps, (one needed per standard).

6.1.4 Funnel. Polyethylene or polypropylene.

6.1.5 Oven. Capable of maintaining a temperature of approximately 105 °C (221 °F).

6.1.6 Analytical Balance. To measure to within 0.1 mg.

6.2 Analysis. The following items are required for analysis:

6.2.1 Spectrophotometer and Recorder. Equipped with an electrodeless discharge lamp and a background corrector to measure absorbance at 193.7 nm. For measuring samples having less than 10 µg As/ml, use a graphite furnace or vapor generator accessory. The recorder shall match the output of the spectrophotometer.

6.2.2 Volumetric Flasks. Class A, 50-ml (one needed per sample and blank), 500-ml, and 1-liter.

6.2.3 Volumetric Pipets. Class A, 1-, 5-, 10-, and 25-ml sizes.

7.0 Reagents and Standards.

Unless otherwise indicated, it is intended that all reagents conform to the specifications established by the Committee on Analytical Reagents of the American Chemical Society, where such specifications are available; otherwise, use the best available grade.

7.1 Sample Collection and Preparation. The following reagents are required for sample collection and preparation:

7.1.1 Water. Deionized distilled to meet ASTM D 1193-77 or 91 Type 3 (incorporated by reference—See § 61.18). When high concentrations of organic matter are not expected to be present, the $KMnO_4$ test for oxidizable organic matter may be omitted. Use in all dilutions requiring water.

7.1.2 Nitric Acid Concentrated.

7.1.3 Nitric Acid, 0.5 N. In a 1-liter volumetric flask containing water, add 32 ml of concentrated HNO_3 and dilute to volume with water.

7.1.4 Hydrofluoric Acid, Concentrated.

7.1.5 Potassium Chloride (KCl) Solution, 10 percent weight by volume (W/V). Dissolve 10 g KCl in water, add 3 ml concentrated HNO_3 , and dilute to 100 ml.

7.1.6 Filter. Teflon filters, 3-micron porosity, 47-mm size. (Available from Millipore Co., type FS, Catalog Number FSLW04700.)

7.1.7 Sodium Borohydride ($NaBH_4$), 5 Percent (W/V). Dissolve 50.0 g of $NaBH_4$ in about 500 ml of 0.1 N NaOH in a 1-liter volumetric flask. Then, dilute to exactly 1.0 liter with 0.1 N NaOH.

7.1.8 Nickel Nitrate, 5 Percent Ni (W/V). Dissolve 24.780 g of nickel nitrate hexahydrate [$Ni(NO_3)_2 6H_2O$] in water in a 100-ml volumetric flask, and dilute to 100 ml with water.

7.1.9 Nickel Nitrate, 1 Percent Ni (W/V). Pipet 20 ml of 5 percent nickel nitrate solution into a 100-ml volumetric flask, and dilute to 100 ml with water.

7.2 Analysis. The following reagents and standards are required for analysis:

7.2.2 Sodium Hydroxide, 0.1 N. Dissolve 2.00 g of NaOH in water in a 500-ml volumetric flask. Dilute to volume with water.

7.2.3 Nitric Acid, 0.5 N. Same as in Section 7.1.3.

7.2.4 Potassium Chloride Solution, 10 percent. Same as in Section 7.1.5.

7.2.5 Hydrochloric Acid, Concentrated.

7.2.6 Potassium Iodide (KI), 30 Percent (W/V). Dissolve 300 g of KI in about 500 ml of water in a 1-liter volumetric flask. Then, dilute to exactly 1.0 liter with water.

7.2.7 Hydrogen Peroxide, 3 Percent by Volume. Pipet 50 ml of 30 percent H_2O_2 into a 500-ml volumetric flask, and dilute to exactly 500 ml with water.

7.2.8 Stock Arsenic Standard, 1 mg As/ml. Dissolve 1.3203 g of primary grade As_2O_3 in 20 ml of 0.1 N NaOH. Slowly add 30 ml of concentrated HNO_3, and heat in an oven at 105 °C (221 °F) for 2 hours. Allow to cool, and dilute to 1 liter with deionized distilled water.

7.2.9 Nitrous Oxide. Suitable quality for AAS analysis.

7.2.10 Acetylene. Suitable quality for AAS analysis.

7.2.11 Quality Assurance Audit Samples. When making compliance determinations, and upon availability, audit samples may be obtained from the appropriate EPA regional Office or from the responsible enforcement authority.

NOTE: The responsible enforcement authority should be notified at least 30 days prior to the test date to allow sufficient time for sample delivery.

8.0 Sample Collection, Preservation, Transport, and Storage

8.1 Sample Collection. A sample that is representative of the ore lot to be tested must be taken prior to analysis. (A portion of the samples routinely collected for metals analysis may be used provided the sample is representative of the ore being tested.)

8.2 Sample Preparation. The sample must be ground into a finely pulverized state.

9.0 Quality Control

Section	Quality control measure	Effect
10.2	Spectrophotometer calibration	Ensure linearity of spectrophotometer response to standards.
11.5	Check for matrix effects	Eliminate matrix effects.

10.0 Calibration and Standardizations

NOTE: Maintain a laboratory log of all calibrations.

10.1 Preparation of Standard Solutions. Pipet 1, 5, 10, and 25 ml of the stock As solution into separate 100-ml volumetric flasks. Add 10 ml KCl solution and dilute to the mark with 0.5 N HNO_3 . This will give standard concentrations of 10, 50, 100, and 250 µg As/ml. For low-level arsenic samples that require the use of a graphite furnace or vapor generator, follow the procedures in Section 11.3:1. Dilute 10 ml of KCl solution to 100 ml with 0.5 N HNO_3 and use as a reagent blank.

10.2 Calibration Curve. Analyze the reagent blank and each standard solution according to the procedures outlined in Section 11.3. Repeat this procedure on each standard solution until two consecutive peaks agree within 3 percent of their average value. Subtract the average peak height (or peak area) of the blank—which must be less than 2 percent of recorder full scale—from the averaged peak heights of each standard solution. If the blank absorbance is greater than 2 percent of full-scale, the probable cause is Hg contamination of a reagent or carry-over of As from a previous sample. Prepare the calibration curve by plotting the corrected peak height of each standard solution versus the corresponding final total As weight in the solution.

10.3 Spectrophotometer Calibration Quality Control. Calculate the least squares slope of the calibration curve. The line must pass through the origin or through a point no further from the origin than ±2 percent of the recorder full scale. Multiply the corrected peak height by the reciprocal of the least squares slope to determine the distance each calibration point lies from the theoretical calibration line. The difference between the calculated concentration values and the actual concentrations must be less than 7 percent for all standards.

NOTE: For instruments equipped with direct concentration readout devices, preparation of a standard curve will not be necessary. In all cases, follow calibration and operational procedures in the manufacturer's instruction manual.

11.0 Analytical Procedure

11.1 Sample Preparation. Weigh 50 to 500 mg of finely pulverized sample to the nearest 0.1 mg. Transfer the sample into the Teflon cup of the digestion bomb, and add 2 ml each of concentrated HNO_3 and HF. Seal the bomb immediately to prevent the loss of any volatile arsenic compounds that may form. Heat in an oven at 105 °C (221 °F) for 2 hours. Remove the bomb from the oven and allow to cool. Using a Teflon filter, quantitatively filter the digested sample into a 50-ml polypropylene volumetric flask. Rinse the bomb three times with small portions of 0.5 N HNO_3 , and filter the rinses into the flask. Add 5 ml of KCl solution to the flask, and dilute to 50 ml with 0.5 N HNO_3 .

11.2 Spectrophotometer Preparation.

11.2.1 Turn on the power; set the wavelength, slit width, and lamp current. Adjust the background corrector as instructed by the manufacturer's manual for the particular atomic absorption spectrophotometer. Adjust the burner and flame characteristics as necessary.

11.2.2 Develop a spectrophotometer calibration curve as outlined in Sections 10.2 and 10.3.

11.3 Arsenic Determination. Analyze an appropriately sized aliquot of each diluted sample (from Section 11.1) until two consecutive peak heights agree within 3 percent of their average value. If applicable, follow the procedures outlined in Section 11.3.1. If the sample concentration falls outside the range of the calibration curve, make an appropriate dilution with 0.5 N HNO_3 so that the final concentration falls within the range of the curve. Using the calibration curve, determine the As concentration in each sample.

NOTE: Because instruments vary between manufacturers, no detailed operating instructions will be given here. Instead, the instrument manufacturer's detailed operating instructions should be followed.

11.3.1 Arsenic Determination at Low Concentration. The lower limit of flame AAS is 10 µg As/ml. If the arsenic concentration of any sample is at a lower level, use the vapor generator or graphite furnace which is available as an accessory component. Flame, graphite furnace, or vapor generators may be used for samples whose concentrations are between 10 and 30 µg/ml. Follow the manufacturer's instructions in the use of such equipment.

11.3.1.1 Vapor Generator Procedure. Place a sample containing between 0 and 5 µg of arsenic in the reaction tube, and dilute to 15 ml with water. Since there is some trial and error involved in this procedure, it may be necessary to screen the samples by conventional AAS until an approximate concentration is determined. After determining the approximate concentration, adjust the volume of the sample accordingly. Pipet 15 ml of concentrated HCl into each

tube. Add 1 ml of 30 percent KI solution. Place the reaction tube into a 50 °C (120 °F) water bath for 5 minutes. Cool to room temperature. Connect the reaction tube to the vapor generator assembly. When the instrument response has returned to baseline, inject 5.0 ml of 5 percent $NaBH_4$ and integrate the resulting spectrophotometer signal over a 30-second time period.

11.3.1.2 Graphite Furnace Procedure. Pipet 5 ml of the digested solution into a 10-ml volumetric flask. Add 1 ml of the 1 percent nickel nitrate solution, 0.5 ml of 50 percent HNO_3 , and 1 ml of the 3 percent $H_2 O_2$, and dilute to 10 ml with water. The sample is now ready to inject in the furnace for analysis.

11.4 Run a blank and standard at least after every five samples to check the spectrophotometer calibration. The peak height of the blank must pass through a point no further from the origin than ±2 percent of the recorder full scale. The difference between the measured concentration of the standard (the product of the corrected average peak height and the reciprocal of the least squares slope) and the actual concentration of the standard must be less than 7 percent, or recalibration of the analyzer is required.

11.5 Mandatory Check for Matrix Effects on the Arsenic Results. Same as Method 12, Section 11.5.

12.0 Data Analysis and Calculations

12.1 Calculate the percent arsenic in the ore sample as follows:

$$\% As = \frac{5 C_a F_d}{W} \qquad \text{Eq. 108A-1}$$

Where:

C_a = Concentration of As as read from the standard curve, µg/ml.

F_d = Dilution factor (equals to 1 if the sample has not been diluted).

W = Weight of ore sample analyzed, mg.

5 = (50 ml sample “ 100)/(10^3 µg/mg).

13.0 Method Performance

13.1 Sensitivity. The lower limit of flame AAS is 10 µg As/ml. The analytical procedure includes provisions for the use of a graphite furnace or vapor generator for samples with a lower arsenic concentration.

14.0 Pollution Prevention. [Reserved]

15.0 Waste Management. [Reserved]

16.0 References

Same as References 1 through 9 of Section 17.0 of Method 5, with the addition of the following:

1. Perkin Elmer Corporation. Analytical Methods of Atomic Absorption Spectrophotometry. 303-0152. Norwalk, Connecticut. September 1976. pp 5-6.

2. Ringwald, D. Arsenic Determination on Process Materials from ASARCO's Copper Smelter in Tacoma, Washington. Unpublished Report. Prepared for Emission Measurement Branch, Emission Standards and Engineering Division, U.S. Environmental Protection Agency, Research Triangle Park, North Carolina. August 1980. 35 pp.

3. Stack Sampling Safety Manual (Draft). U.S. Environmental Protection Agency, Office of Air Quality Planning and Standard, Research Triangle Park, NC. September 1978.

17.0 Tables, Diagrams, Flowcharts, and Validation Data. [Reserved]

Method 108B—Determination of Arsenic Content in Ore Samples From Nonferrous Smelters

NOTE: This method does not include all of the specifications (*e.g.,* equipment and supplies) and procedures (*e.g.,* sampling and analytical) essential to its performance. Some material is incorporated by reference from other methods in this appendix and in appendix A to 40 CFR part 60. Therefore, to obtain reliable results, persons using this method should have a thorough knowledge of at least the following additional test methods: Method 12 and Method 108A.

1.0 Scope and Application

1.1 Analytes.

Analyte	CAS No.	Sensitivity
Arsenic compounds as arsenic (As)	7440-38-2	Lower limit 10 µg/ml.

1.2 Applicability. This method applies to the determination of inorganic As content of process ore and reverberatory matte samples from nonferrous smelters and other sources as specified in an applicable subpart of the regulations. Samples resulting in an analytical concentration greater than 10 µg As/ml may be analyzed by this method. For lower level arsenic samples, Method 108C should be used.

1.3 Data Quality Objectives. Adherence to the requirements of this method will enhance the quality of the data obtained from air pollutant sampling methods.

2.0 Summary of Method

Arsenic bound in ore samples is liberated by acid digestion and analyzed by flame atomic absorption spectrophotometry (AAS).

3.0 Definitions [Reserved]

4.0 Interferences

Analysis for As by flame AAS is sensitive to the chemical composition and to the physical properties (*e.g.,* viscosity, pH) of the sample. The analytical procedure includes a check for matrix effects (Section 11.4).

5.0 Safety

5.1 Disclaimer. This method may involve hazardous materials, operations, and equipment. This test method may not address all of the safety problems associated with its use. It is the responsibility of the user to establish appropriate safety and health practices and determine the applicability of regulatory limitations prior to performing this test method.

5.2 Corrosive Reagents. The following reagents are hazardous. Personal protective equipment and safe procedures that prevent chemical splashes are recommended. If contact occurs, immediately flush with copious amounts of water for at least 15 minutes. Remove clothing under shower and decontaminate. Treat residual chemical burns as thermal burns.

5.2.1 Hydrochloric acid (HCl). Highly corrosive liquid with toxic vapors. Vapors are highly irritating to eyes, skin, nose, and lungs, causing severe damage. May cause bronchitis, pneumonia, or edema of lungs. Exposure to concentrations of 0.13 to 0.2 percent can be lethal to humans in a few minutes. Provide ventilation to limit exposure. Reacts with metals, producing hydrogen gas.

5.2.2 Hydrofluoric Acid (HF). Highly corrosive to eyes, skin, nose, throat, and lungs. Reaction to exposure may be delayed by 24 hours or more. Provide ventilation to limit exposure.

5.2.3 Nitric Acid (HNO_3). Highly corrosive to eyes, skin, nose, and lungs. Vapors are highly toxic and can cause bronchitis, pneumonia, or edema of lungs. Reaction to inhalation may be delayed as long as 30 hours and still be fatal. Provide ventilation to limit exposure. Strong oxidizer. Hazardous reaction may occur with organic materials such as solvents.

5.2.4 Perchloric Acid ($HClO_4$). Corrosive to eyes, skin, nose, and throat. Provide ventilation to limit exposure. Very strong oxidizer. Keep separate from water and oxidizable materials to prevent vigorous evolution of heat, spontaneous combustion, or explosion. Heat solutions containing $HClO_4$ only in hoods specifically designed for $HClO_4$.

6.0 Equipment and Supplies

6.1 Sample Preparation. The following items are required for sample preparation:

6.1.1 Teflon Beakers. 150-ml.

6.1.2 Graduated Pipets. 5-ml disposable.

6.1.3 Graduated Cylinder. 50-ml.

6.1.4 Volumetric Flask. 100-ml.

6.1.5 Analytical Balance. To measure within 0.1 mg.

6.1.6 Hot Plate.

6.1.7 Perchloric Acid Fume Hood.

6.2 Analysis. The following items are required for analysis:

6.2.1 Spectrophotometer. Equipped with an electrodeless discharge lamp and a background corrector to measure absorbance at 193.7 nm.

6.2.2 Beaker and Watch Glass. 400-ml.

6.2.3 Volumetric Flask. 1-liter.

6.2.4 Volumetric Pipets. 1-, 5-, 10-, and 25-ml.

7.0 Reagents and Standards

Unless otherwise indicated, it is intended that all reagents conform to the specifications established by the Committee on Analytical Reagents of the American Chemical Society, where such specifications are available; otherwise, use the best available grade.

7.1 Sample Preparation. The following reagents are required for sample preparation:

7.1.1 Water. Deionized distilled to meet ASTM D 1193-77 or 91 Type 3 (incorporated by reference—see § 61.18).

7.1.2 Nitric Acid, Concentrated.

7.1.3 Hydrofluoric Acid, Concentrated.

7.1.4 Perchloric Acid, 70 Percent.

7.1.5 Hydrochloric Acid, Concentrated.

7.2 Analysis. The following reagents and standards are required for analysis:

7.2.1 Water. Same as in Section 7.1.1.

7.2.2 Stock Arsenic Standard, 1.0 mg As/ml. Dissolve 1.3203 g of primary grade $As_2 0_3$ [dried at 105 °C (221 °F)] in a 400-ml beaker with 10 ml of HNO_3 and 5 ml of HCl. Cover with a watch glass, and heat gently until dissolution is complete. Add 10 ml of HNO_3 and 25 ml of $HClO_4$, evaporate to strong fumes of $HClO_4$, and reduce to about 20 ml volume. Cool, add 100 ml of water and 100 ml of HCl, and transfer quantitatively to a 1-liter volumetric flask. Dilute to volume with water and mix.

7.2.3 Acetylene. Suitable quality for AAS analysis.

7.2.4 Air. Suitable quality for AAS analysis.

8.0 Sample Collection, Preservation, Transport, and Storage

Same as in Method 108A, Sections 8.1 and 8.2.

9.0 Quality Control

Section	Quality control measure	Effect
10.2	Spectrophotometer calibration	Ensure linearity of spectrophotometer response to standards.
11.4	Check for matrix effects	Eliminate matrix effects.

10.0 Calibration and Standardization

NOTE: Maintain a laboratory log of all calibrations.

10.1 Preparation of Standard Solutions. Pipet 1, 5, 10, and 25 ml of the stock As solution into separate 100-ml volumetric flasks. Add 2 ml of $HClO_4$, 10 ml of HCl, and dilute to the mark with water. This will provide standard concentrations of 10, 50, 100, and 250 µg As/ml.

10.2 Calibration Curve and Spectrophotometer Calibration Quality Control. Same as Method 108A, Sections 10.2 and 10.3

11.0 Analytical Procedure

11.1 Sample Preparation. Weigh 100 to 1000 mg of finely pulverized sample to the nearest 0.1 mg. Transfer the sample to a 150-ml Teflon beaker. Dissolve the sample by adding 15 ml of HNO_3 , 10 ml of HCl, 10 ml of HF, and 10 ml of $HClO_4$ in the exact order as described, and let stand for 10 minutes. In a $HClO_4$ fume hood, heat on a hot plate until 2-3 ml of $HClO_4$ remain, then cool. Add 20 ml of water and 10 ml of HCl. Cover and warm until the soluble salts are in solution. Cool, and transfer quantitatively to a 100-ml volumetric flask. Dilute to the mark with water.

11.2 Spectrophotometer Preparation. Same as in Method 108A, Section 11.2.

11.3 Arsenic Determination. If the sample concentration falls outside the range of the calibration curve, make an appropriate dilution with 2 percent $HClO_4$ /10 percent HCl (prepared by diluting 2 ml concentrated $HClO_4$ and 10 ml

concentrated HCl to 100 ml with water) so that the final concentration falls within the range of the curve. Using the calibration curve, determine the As concentration in each sample.

NOTE: Because instruments vary between manufacturers, no detailed operating instructions will be given here. Instead, the instrument manufacturer's detailed operating instructions should be followed.

Run a blank and standard at least after every five samples to check the spectrophotometer calibration. The peak height of the blank must pass through a point no further from the origin than ±2 percent of the recorder full scale. The difference between the measured concentration of the standard (the product of the corrected average peak height and the reciprocal of the least squares slope) and the actual concentration of the standard must be less than 7 percent, or recalibration of the analyzer is required.

11.4 Mandatory Check for Matrix Effects on the Arsenic Results. Same as Method 12, Section 11.5.

12.0 Data Analysis and Calculations

Same as in Method 108A, Section 12.0.

13.0 Method Performance

13.1 Sensitivity. The lower limit of flame AAS is 10 µg As/ml.

14.0 Pollution Prevention [Reserved]

15.0 Waste Management [Reserved]

16.0 References

Same as in Method 108A, Section 16.0.

17.0 Tables, Diagrams, Flowcharts, and Validation Data [Reserved]

Method 108C—Determination of Arsenic Content in Ore Samples From Nonferrous Smelters (Molybdenum Blue Photometric Procedure)

NOTE: This method does not include all of the specifications (*e.g.,* equipment and supplies) and procedures (*e.g.,* sampling and analytical) essential to its performance. Some material is incorporated by reference from other methods in this part. Therefore, to obtain reliable results, persons using this method should have a thorough knowledge of at least Method 108A.

1.0 Scope and Application

1.1 Analytes.

Analyte	CAS No.	Sensitivity
Arsenic compounds as arsenic (As)	7440-38-2	Lower limit 0.0002 percent As by weight.

1.2 Applicability. This method applies to the determination of inorganic As content of process ore and reverberatory matte samples from nonferrous smelters and other sources as specified in an applicable subpart of the regulations.

1.3 Data Quality Objectives. Adherence to the requirements of this method will enhance the quality of the data obtained from air pollutant sampling methods.

2.0 Summary of Method

Arsenic bound in ore samples is liberated by acid digestion and analyzed by the molybdenum blue photometric procedure.

3.0 Definitions. [Reserved]

4.0 Interferences. [Reserved]

5.0 Safety

5.1 Disclaimer. This method may involve hazardous materials, operations, and equipment. This test method may not address all of the safety problems associated with its use. It is the responsibility of the user to establish appropriate safety and health practices and determine the applicability of regulatory limitations prior to performing this test method.

5.2 Corrosive Reagents. The following reagents are hazardous. Personal protective equipment and safe procedures that prevent chemical splashes are recommended. If contact occurs, immediately flush with copious amounts of water for at least 15 minutes. Remove clothing under shower and decontaminate. Treat residual chemical burns as thermal burns.

5.2.1 Hydrochloric Acid (HCl). Highly corrosive liquid with toxic vapors. Vapors are highly irritating to eyes, skin, nose, and lungs, causing severe damage. May cause bronchitis, pneumonia, or edema of lungs. Exposure to concentrations of 0.13 to 0.2 percent can be lethal to humans in a few minutes. Provide ventilation to limit exposure. Reacts with metals, producing hydrogen gas.

5.2.2 Hydrofluoric Acid (HF). Highly corrosive to eyes, skin, nose, throat, and lungs. Reaction to exposure may be delayed by 24 hours or more. Provide ventilation to limit exposure.

5.2.3 Nitric Acid (HNO_4). Highly corrosive to eyes, skin, nose, and lungs. Vapors are highly toxic and can cause bronchitis, pneumonia, or edema of lungs. Reaction to inhalation may be delayed as long as 30 hours and still be fatal. Provide ventilation to limit exposure. Strong oxidizer. Hazardous reaction may occur with organic materials such as solvents.

5.2.4 Perchloric Acid ($HClO_4$). Corrosive to eyes, skin, nose, and throat. Provide ventilation to limit exposure. Very strong oxidizer. Keep separate from water and oxidizable materials to prevent vigorous evolution of heat, spontaneous combustion, or explosion. Heat solutions containing $HClO_4$ only in hoods specifically designed for $HClO_4$.

5.2.5 Sulfuric acid ($H_2 SO_4$). Rapidly destructive to body tissue. Will cause third degree burns. Eye damage may result in blindness. Inhalation may be fatal from spasm of the larynx, usually within 30 minutes. May cause lung tissue damage with edema. 3 mg/m^3 will cause lung damage in uninitiated. 1 mg/m^3 for 8 hours will cause lung damage or, in higher concentrations, death. Provide ventilation to limit inhalation. Reacts violently with metals and organics.

6.0 Equipment and Supplies

6.1 Sample Preparation. The following items are required for sample preparation:

6.1.1 Analytical Balance. To measure to within 0.1 mg.

6.1.2 Erlenmeyer Flask. 300-ml.

6.1.3 Hot Plate.

6.1.4 Distillation Apparatus. No. 6, in ASTM E 50-82, 86, or 90 (Reapproved 1995)(incorporated by reference—see § 61.18); detailed in Figure 108C-1.

6.1.5 Graduated Cylinder. 50-ml.

6.1.6 Perchloric Acid Fume Hood.

6.2 Analysis. The following items are required for analysis:

6.2.1 Spectrophotometer. Capable of measuring at 660 nm.

6.2.2 Volumetric Flasks. 50- and 100-ml.

7.0 Reagents and Standards

Unless otherwise indicated, it is intended that all reagents conform to the specifications established by the Committee on Analytical Reagents of the American Chemical Society, where such specifications are available; otherwise, use the best available grade.

7.1 Sample Preparation. The following reagents are required for sample preparation:

7.1.1 Water. Deionized distilled to meet ASTM D 1193-77 or 91 Type 3 (incorporated by reference—see § 61.18). When high concentrations of organic matter are not expected to be present, the $KMnO_4$ test for oxidizable organic matter may be omitted. Use in all dilutions requiring water.

7.1.2 Nitric Acid, Concentrated.

7.1.3 Hydrofluoric Acid, Concentrated.

7.1.4 Sulfuric Acid, Concentrated.

7.1.5 Perchloric Acid, 70 Percent.

7.1.6 Hydrochloric Acid, Concentrated.

7.1.7 Dilute Hydrochloric Acid. Add one part concentrated HCl to nine parts water.

7.1.8 Hydrazine Sulfate ($(NH_2)_2 \cdot H_2SO_4$).

7.1.9 Potassium Bromide (KBr).

7.1.10 Bromine Water, Saturated.

7.2 Analysis. The following reagents and standards are required for analysis:

7.2.1 Water. Same as in Section 7.1.1.

7.2.2 Methyl Orange Solution, 1 g/liter.

7.2.3 Ammonium Molybdate Solution, 5 g/liter. Dissolve 0.5 g $(NH_4)Mo_7O_{24} \cdot 4H_2O$ in water in a 100-ml volumetric flask, and dilute to the mark. This solution must be freshly prepared.

7.2.4 Standard Arsenic Solution, 10 µg As/ml. Dissolve 0.13203 g of As_2O_3 in 100 ml HCl in a 1-liter volumetric flask. Add 200 ml of water, cool, dilute to the mark with water, and mix. Transfer 100 ml of this solution to a 1-liter volumetric flask, add 40 ml HCl, cool, dilute to the mark, and mix.

7.2.5 Hydrazine Sulfate Solution, 1 g/liter. Dissolve 0.1 g of $[(NH_2)_2 \cdot H_2SO_4]$ in water, and dilute to 100 ml in a volumetric flask. This solution must be freshly prepared.

7.2.6 Potassium Bromate ($KBrO_3$) Solution, 0.03 Percent Weight by Volume (W/V). Dissolve 0.3 g $KBrO_3$ in water, and dilute to 1 liter with water.

7.2.7 Ammonium Hydroxide (NH_4OH), Concentrated.

7.2.8 Boiling Granules.

7.2.9 Hydrochloric Acid, 50 percent by volume. Dilute equal parts concentrated HCl with water.

8.0 Sample Collection, Preservation, Transport, and Storage

Same as in Method 108A, Sections 8.1 and 8.2.

9.0 Quality Control

Section	Quality control measure	Effect
10.2	Calibration curve preparation	Ensure linearity of spectrophotometric response to standards.

10.0 Calibration and Standardizations

NOTE: Maintain a laboratory log of all calibrations.

10.1 Preparation of Standard Solutions. Transfer 1.0, 2.0, 4.0, 8.0, 12.0, 16.0, and 20.0 ml of standard arsenic solution (10 µg/ml) to each of seven 50-ml volumetric flasks. Dilute to 20 ml with dilute HCl. Add one drop of methyl orange solution and neutralize to the yellow color with dropwise addition of NH_4OH. Just bring back to the red color by dropwise addition of dilute HCl, and add 10 ml in excess. Proceed with the color development as described in Section 11.2.

10.2 Calibration Curve. Plot the spectrophotometric readings of the calibration solutions against µg As per 50 ml of solution. Use this curve to determine the As concentration of each sample.

10.3 Spectrophotometer Calibration Quality Control. Calculate the least squares slope of the calibration curve. The line must pass through the origin or through a point no further from the origin than ±2 percent of the recorder full scale. Multiply the corrected peak height by the reciprocal of the least squares slope to determine the distance each calibration point lies from the theoretical calibration line. The difference between the calculated concentration values and the actual concentrations must be less than 7 percent for all standards.

11.0 Analytical Procedure

11.1 Sample Preparation.

11.1.1 Weigh 1.0 g of finely pulverized sample to the nearest 0.1 mg. Transfer the sample to a 300 ml Erlenmeyer flask and add 15 ml of HNO_3, 4 ml HCl, 2 ml HF, 3 ml $HClO_4$, and 15 ml H_2SO_4, in the order listed. In a $HClO_4$ fume hood, heat on a hot plate to decompose the sample. Then heat while swirling over an open flame until dense white fumes evolve. Cool, add 15 ml of water, swirl to hydrate the H_2SO_4 completely, and add several boiling granules. Cool to room temperature.

11.1.2 Add 1 g of KBr, 1 g hydrazine sulfate, and 50 ml HCl. Immediately attach the distillation head with thermometer and dip the side arm into a 50-ml graduated cylinder containing 25 ml of water and 2 ml of bromine water. Keep the graduated cylinder immersed in a beaker of cold water during distillation. Distill until the temperature of the vapor in the flask reaches 107 °C (225 °F). When distillation is complete, remove the flask from the hot plate, and simultaneously wash down the side arm with water as it is removed from the cylinder.

11.1.3 If the expected arsenic content is in the range of 0.0020 to 0.10 percent, dilute the distillate to the 50-ml mark of the cylinder with water, stopper, and mix. Transfer a 5.0-ml aliquot to a 50-ml volumetric flask. Add 10 ml of water and a boiling granule. Place the flask on a hot plate, and heat gently until the bromine is expelled and the color of methyl orange indicator persists upon the addition of 1 to 2 drops. Cool the flask to room temperature. Neutralize just to the yellow color of the indicator with dropwise additions of NH_4 OH. Bring back to the red color by dropwise addition of dilute HCl, and add 10 ml excess. Proceed with the molybdenum blue color development as described in Section 11.2.

11.1.4 If the expected arsenic content is in the range of 0.0002 to 0.0010 percent As, transfer either the entire initial distillate or the measured remaining distillate from Section 11.1.2 to a 250-ml beaker. Wash the cylinder with two successive portions of concentrated HNO_3 , adding each portion to the distillate in the beaker. Add 4 ml of concentrated $HClO_4$, a boiling granule, and cover with a flat watch glass placed slightly to one side. Boil gently on a hot plate until the volume is reduced to approximately 10 ml. Add 3 ml of HNO_3 , and continue the evaporation until $HClO_4$ is refluxing on the beaker cover. Cool briefly, rinse the underside of the watch glass and the inside of the beaker with about 3-5 ml of water, cover, and continue the evaporation to expel all but 2 ml of the $HClO_4$.

NOTE: If the solution appears cloudy due to a small amount of antimony distilling over, add 4 ml of 50 percent HCl and 5 ml of water, cover, and warm gently until clear. If cloudiness persists, add 5 ml of HNO_3 and 2 ml H_2 SO_4 . Continue the evaporation of volatile acids to solubilize the antimony until dense white fumes of H_2 SO_4 appear. Retain at least 1 ml of the H_2 SO_4 .

11.1.5 To the 2 ml of $HClO_4$ solution or 1 ml of H_2 SO_4 solution, add 15 ml of water, boil gently for 2 minutes, and then cool. Proceed with the molybdenum blue color development by neutralizing the solution directly in the beaker just to the yellow indicator color by dropwise addition of NH_4 OH. Obtain the red color by dropwise addition of dilute HCl. Transfer the solution to a 50-ml volumetric flask. Rinse the beaker successively with 10 ml of dilute HCl, followed by several small portions of water. At this point the volume of solution in the flask should be no more than 40 ml. Continue with the color development as described in Section 11.2.

11.2 Analysis.

11.2.1 Add 1 ml of $KBrO_3$ solution to the flask and heat on a low-temperature hot plate to about 50 °C (122 °F) to oxidize the arsenic and methyl orange. Add 5.0 ml of ammonium molybdate solution to the warm solution and mix. Add 2.0 ml of hydrazine sulfate solution, dilute until the solution comes within the neck of the flask, and mix. Place the flask in a 400 ml beaker, 80 percent full of boiling water, for 10 minutes. Enough heat must be supplied to prevent the water bath from cooling much below the boiling point upon inserting the volumetric flask. Remove the flask, cool to room temperature, dilute to the mark, and mix.

11.2.2 Transfer a suitable portion of the reference solution to an absorption cell, and adjust the spectrophotometer to the initial setting using a light band centered at 660 nm. While maintaining this spectrophotometer adjustment, take the readings of the calibration solutions followed by the samples.

12.0 Data Analysis and Calculations

Same as in Method 108A, Section 12.0.

13.0 Method Performance. [Reserved]

14.0 Pollution Prevention. [Reserved]

15.0 Waste Management. [Reserved]

16.0 References

1. Ringwald, D. Arsenic Determination on Process Materials from ASARCO's Copper Smelter in Tacoma, Washington. Unpublished Report. Prepared for the Emission Measurement Branch, Technical Support Division, U.S. Environmental Protection Agency, Research Triangle Park, North Carolina. August 1980. 35 pp.

17.0 Tables, Diagrams, Flowcharts, and Validation Data

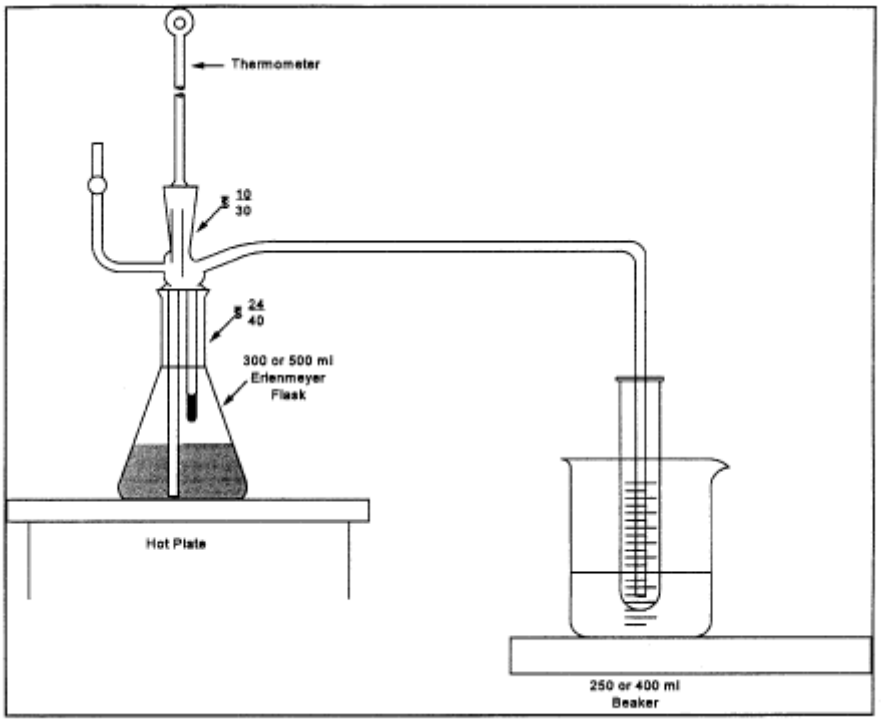

Figure 108C-1. Distillation Apparatus.

Method 111—Determination of Polonium-210 Emissions From Stationary Sources

NOTE: This method does not include all of the specifications (*e.g.,* equipment and supplies) and procedures (*e.g.,* sampling and analytical) essential to its performance. Some material is incorporated by reference from methods in appendix A to 40 CFR part 60. Therefore, to obtain reliable results, persons using this method should have a thorough knowledge of at least the following additional test methods: Method 1, Method 2, Method 3, and Method 5.

1.0 Scope and Application

1.1 Analytes.

Analyte	CAS No.	Sensitivity
Polonium	7440-08-6	Not specified.

1.2 Applicability. This method is applicable for the determination of the polonium-210 content of particulate matter samples collected from stationary source exhaust stacks, and for the use of these data to calculate polonium-210 emissions from individual sources and from all affected sources at a facility.

1.3 Data Quality Objectives. Adherence to the requirements of this method will enhance the quality of the data obtained from air pollutant sampling methods.

2.0 Summary of Method

A particulate matter sample, collected according to Method 5, is analyzed for polonium-210 content: the polonium-210 in the sample is put in solution, deposited on a metal disc, and the radioactive disintegration rate measured. Polonium in acid solution spontaneously deposits on surfaces of metals that are more electropositive than polonium. This principle is routinely used in the radiochemical analysis of polonium-210. Data reduction procedures are

provided, allowing the calculation of polonium-210 emissions from individual sources and from all affected sources at a facility, using data obtained from Methods 2 and 5 and from the analytical procedures herein.

3.0 Definitions [Reserved]

4.0 Interferences [Reserved]

5.0 Safety

5.1 Disclaimer. This method may involve hazardous materials, operations, and equipment. This test method may not address all of the safety problems associated with its use. It is the responsibility of the user of this test method to establish appropriate safety and health practices and determine the applicability of regulatory limitations prior to performing this test method.

5.2 Corrosive Reagents. The following reagents are hazardous. Personal protective equipment and safe procedures are useful in preventing chemical splashes. If contact occurs, immediately flush with copious amounts of water at least 15 minutes. Remove clothing under shower and decontaminate. Treat residual chemical burns as thermal burns.

5.2.1 Hydrochloric Acid (HCl). Highly corrosive liquid with toxic vapors. Vapors are highly irritating to eyes, skin, nose, and lungs, causing severe damage. May cause bronchitis, pneumonia, or edema of lungs. Exposure to concentrations of 0.13 to 0.2 percent can be lethal to humans in a few minutes. Provide ventilation to limit exposure. Reacts with metals, producing hydrogen gas.

5.2.2 Hydrofluoric Acid (HF). Highly corrosive to eyes, skin, nose, throat, and lungs. Reaction to exposure may be delayed by 24 hours or more. Provide ventilation to limit exposure.

5.2.3 Nitric Acid (HNO_3). Highly corrosive to eyes, skin, nose, and lungs. Vapors cause bronchitis, pneumonia, or edema of lungs. Reaction to inhalation may be delayed as long as 30 hours and still be fatal. Provide ventilation to limit exposure. Strong oxidizer. Hazardous reaction may occur with organic materials such as solvents.

5.2.4 Perchloric Acid ($HClO_4$). Corrosive to eyes, skin, nose, and throat. Provide ventilation to limit exposure. Keep separate from water and oxidizable materials to prevent vigorous evolution of heat, spontaneous combustion, or explosion. Heat solutions containing $HClO_4$ only in hoods specifically designed for $HClO_4$.

6.0 Equipment and Supplies

6.1 Alpha Spectrometry System. Consisting of a multichannel analyzer, biasing electronics, silicon surface barrier detector, vacuum pump and chamber.

6.2 Constant Temperature Bath at 85 °C (185 °F).

6.3 Polished Silver Discs. 3.8 cm diameter, 0.4 mm thick with a small hole near the edge.

6.4 Glass Beakers. 400 ml, 150 ml.

6.5 Hot Plate, Electric.

6.6 Fume Hood.

6.7 Teflon Beakers, 150 ml.

6.8 Magnetic Stirrer.

6.9 Stirring Bar.

6.10 Hooks. Plastic or glass, to suspend plating discs.

6.11 Internal Proportional Counter. For measuring alpha particles.

6.12 Nucleopore Filter Membranes. 25 mm diameter, 0.2 micrometer pore size or equivalent.

6.13 Planchets. Stainless steel, 32 mm diameter with 1.5 mm lip.

6.14 Transparent Plastic Tape. 2.5 cm wide with adhesive on both sides.

6.15 Epoxy Spray Enamel.

6.16 Suction Filter Apparatus. For 25 mm diameter filter.

6.17 Wash Bottles, 250 ml capacity.

6.18 Graduated Cylinder, plastic, 25 ml capacity.

6.19 Volumetric Flasks, 100 ml, 250 ml.

7.0 Reagents and Standards

Unless otherwise indicated, it is intended that all reagents conform to the specifications established by the Committee on Analytical Reagents of the American Chemical Society, where such specifications are available; otherwise, use the best available grade.

7.1 Ascorbic Acid.

7.2 Ammonium Hydroxide (NH_4 OH), 15 M.

7.3 Water. Deionized distilled, to conform to ASTM D 1193-77 or 91 (incorporated by reference—see § 61.18), Type 3. Use in all dilutions requiring water.

7.4 Ethanol (C_2 H_5 OH), 95 percent.

7.5 Hydrochloric Acid, 12 M.

7.6 Hydrochloric Acid, 1 M. Dilute 83 ml of the 12 M HCl to 1 liter with distilled water.

7.7 Hydrofluoric Acid, 29 M.

7.8 Hydrofluoric Acid, 3 M. Dilute 52 ml of the 29 M HF to 500 ml with distilled water. Use a plastic graduated cylinder and storage bottle.

7.9 Lanthanum Carrier, 0.1 mg La^{+3} /ml. Dissolve 0.078 gram lanthanum nitrate, $La(NO_3)_3 \cdot 6H_2O$ in 250 ml of 1 M HCl.

7.10 Nitric Acid, 16 M.

7.11 Perchloric Acid, 12 M.

7.12 Polonium-209 Solution.

7.13 Silver Cleaner. Any mild abrasive commercial silver cleaner.

7.14 Degreaser.

7.15 Standard Solution. Standardized solution of an alpha-emitting actinide element, such as plutonium-239 or americium-241.

8.0 Sample Collection, Preservation, Transport, and Storage. [Reserved]

9.0 Quality Control

9.1 General Requirement.

9.1.1 All analysts using this method are required to demonstrate their ability to use the method and to define their respective accuracy and precision criteria.

9.2 Miscellaneous Quality Control Measures

Section	Quality control measure	Effect
10.1	Standardization of alpha spectrometry system	Ensure precision of sample analyses.
10.3	Standardization of internal proportional counter	Ensure precise sizing of sample aliquot.
11.1, 11.2	Determination of procedure background and instrument background	Minimize background effects.

10.0 Calibration and Standardization

10.1 Standardization of Alpha Spectrometry System.

10.1.1 Add a quantity of the actinide standard solution to a 100 ml volumetric flask so that the final concentration when diluted to a volume of 100 ml will be approximately 1_p Ci/ml.

10.1.2 Add 10 ml of 16 M HNO_3 and dilute to 100 ml with water.

10.1.3 Add 20 ml of 1 M HCl to each of six 150 ml beakers. Add 1.0 ml of lanthanum carrier, 0.1 mg lanthanum per ml, to the acid solution in each beaker.

10.1.4 Add 1.0 ml of the 1 pCi/ml working solution (from Section 10.1.1) to each beaker. Add 5.0 ml of 3 M HF to each beaker.

10.1.5 Cover beakers and allow solutions to stand for a minimum of 30 minutes. Filter the contents of each beaker through a separate filter membrane using the suction filter apparatus. After each filtration, wash the filter membrane with 10 ml of distilled water and 5 ml of ethanol, and allow the filter membrane to air dry on the filter apparatus.

10.1.6 Carefully remove the filter membrane and mount it, filtration side up, with double-side tape on the inner surface of a planchet. Place planchet in an alpha spectrometry system and count each planchet for 1000 minutes.

10.1.7 Calculate the counting efficiency of the detector for each aliquot of the 1 pCi/ml actinide working solution using Eq. 111-1 in Section 12.2.

10.1.8 Determine the average counting efficiency of the detector, E_c , by calculating the average of the six determinations.

10.2 Preparation of Standardized Solution of Polonium-209.

10.2.1 Add a quantity of the Po-209 solution to a 100 ml volumetric flask so that the final concentration when diluted to a 100 ml volume will be approximately 1 pCi/ml.

10.2.2 Follow the procedures outlined in Sections 10.1.2 through 10.1.6, except substitute 1.0 ml of polonium-209 tracer solution (Section 10.2.1) and 3.0 ml of 15 M ammonium hydroxide for the 1 pCi/ml actinide working solution and the 3 M HF, respectively.

10.2.3 Calculate the activity of each aliquot of the polonium-209 tracer solution using Eq. 111-2 in Section 12.3.

10.2.4 Determine the average activity of the polonium-209 tracer solution, F, by averaging the results of the six determinations.

10.3 Standardization of Internal Proportional Counter

10.3.1 Add a quantity of the actinide standard solution to a 100 ml volumetric flask so that the final concentration when diluted to a 100 ml volume will be approximately 100 pCi/ml.

10.3.2 Follow the procedures outlined in Sections 10.1.2 through 10.1.6, except substitute the 100 pCi/ml actinide working solution for the 1 pCi/ml solution, place the planchet in an internal proportional counter (instead of an alpha spectrometry system), and count for 100 minutes (instead of 1000 minutes).

10.3.3 Calculate the counting efficiency of the internal proportional counter for each aliquot of the 100 pCi/ml actinide working solution using Eq. 111-3 in 12.4.

10.3.4 Determine the average counting efficiency of the internal proportional counter, E_I , by averaging the results of the six determinations.

11.0 Analytical Procedure

NOTE: Perform duplicate analyses of all samples, including background counts and Method 5 samples. Duplicate measurements are considered acceptable when the difference between them is less than two standard deviations as described in EPA 600/4-77-001 or subsequent revisions.

11.1 Determination of Procedure Background. Background counts used in all equations are determined by performing the specific analysis required using the analytical reagents only. All procedure background counts and sample counts for the internal proportional counter should utilize a counting time of 100 minutes; for the alpha spectrometry system, 1000 minutes. These background counts should be performed no less frequently than once per 10 sample analyses.

11.2 Determination of Instrument Background. Instrument backgrounds of the internal proportional counter and the alpha spectrometry system should be determined on a weekly basis. Instrument background should not exceed procedure background. If this occurs, it may be due to a malfunction or contamination, and should be corrected before use.

11.4 Sample Preparation. Treat the Method 5 samples [*i.e.,* the glass fiber filter (Container No. 1) and the acetone rinse (Container No. 2)] as follows:

11.4.1 Container No. 1. Transfer the filter and any loose particulate matter from the sample container to a 150-ml Teflon beaker.

11.4.2 Container No. 2. Note the level of liquid in the container, and confirm on the analysis sheet whether leakage occurred during transport. If a noticeable amount of leakage has occurred, either void the sample or use methods, subject to the approval of the Administrator, to correct the final results. Transfer the contents to a 400-ml glass beaker. Add polonium-209 tracer solution to the glass beaker in an amount approximately equal to the amount of polonium-210 expected in the total particulate sample. Record the activity of the tracer solution added. Add 16 M nitric acid to the beaker to digest and loosen the residue.

11.4.3 Transfer the contents of the glass beaker to the Teflon beaker containing the glass fiber filter. Rinse the glass beaker with 16 M HNO_3 . If necessary, reduce the volume in the beaker by evaporation until all of the nitric acid HNO_3 from the glass beaker has been transferred to the Teflon beaker.

11.4.4 Add 30 ml of 29 M HF to the Teflon beaker and evaporate to near dryness on a hot plate in a properly operating hood.

NOTE: Do not allow the residue to go to dryness and overheat; this will result in loss of polonium.

11.4.5 Repeat step 11.4.4 until the filter is dissolved.

11.4.6 Add 100 ml of 16 M HNO_3 to the residue in the Teflon beaker and evaporate to near dryness.

NOTE: Do not allow the residue to go to dryness.

11.4.7 Add 50 ml of 16 M HNO_3 and 10 ml of 12 M perchloric acid to the Teflon beaker and heat until dense fumes of perchloric acid are evolved.

11.4.8 Repeat steps 11.4.4 to 11.4.7 as necessary until sample is completely dissolved.

11.4.9 Add 10 ml of 12 M HCl to the Teflon beaker and evaporate to dryness. Repeat additions and evaporations several times.

11.4.10 Transfer the sample to a 250-ml volumetric flask and dilute to volume with 3 M HCl.

11.5 Sample Screening. To avoid contamination of the alpha spectrometry system, check each sample as follows:

11.5.1 Add 20 ml of 1 M HCl, 1 ml of the lanthanum carrier solution (0.1 mg La/ml), a 1 ml aliquot of the sample solution from Section 11.4.10, and 3 ml of 15 M ammonium hydroxide to a 250-ml beaker in the order listed. Allow this solution to stand for a minimum of 30 minutes.

11.5.2 Filter the solution through a filter membrane using the suction filter apparatus. Wash the filter membrane with 10 ml of water and 5 ml of ethanol, and allow the filter membrane to air dry on the filter apparatus.

11.5.3 Carefully remove the filter membrane and mount it, filtration side up, with double-side tape on the inner surface of a planchet. Place the planchet in an internal proportional counter, and count for 100 minutes.

11.5.4 Calculate the activity of the sample using Eq. 111-4 in Section 12.5.

11.5.5 Determine the aliquot volume of the sample solution from Section 11.4.10 to be analyzed for polonium-210, such that the aliquot contains an activity between 1 and 4 picocuries. Use Eq. 111-5 in Section 12.6.

11.6 Preparation of Silver Disc for Spontaneous Electrodeposition.

11.6.1 Clean both sides of the polished silver disc with silver cleaner and with degreaser.

11.6.2 Place disc on absorbent paper and spray one side with epoxy spray enamel. This should be carried out in a well-ventilated area, with the disc lying flat to keep paint on one side only. Allow paint to dry for 24 hours before using disc for deposition.

11.7 Sample Analysis.

11.7.1 Add the aliquot of sample solution from Section 11.4.10 to be analyzed for polonium-210, the volume of which was determined in Section 11.5.5, to a suitable 200-ml container to be placed in a constant temperature bath.

NOTE: Aliquot volume may require a larger container.

11.7.2 If necessary, bring the volume to 100 ml with 1 M HCl. If the aliquot volume exceeds 100 ml, use total aliquot.

11.7.3 Add 200 mg of ascorbic acid and heat solution to 85 °C (185 °F) in a constant temperature bath.

11.7.4 Suspend a silver disc in the heated solution using a glass or plastic rod with a hook inserted through the hole in the disc. The disc should be totally immersed in the solution, and the solution must be stirred constantly, at all times during the plating operation. Maintain the disc in solution for 3 hours.

11.7.5 Remove the silver disc, rinse with deionized distilled water, and allow to air dry at room temperature.

11.7.6 Place the disc, with deposition side (unpainted side) up, on a planchet and secure with double-side plastic tape. Place the planchet with disc in alpha spectrometry system and count for 1000 minutes.

12.0 Data Analysis and Calculations.

12.1 Nomenclature.

A = Picocuries of polonium-210 in the Method 5 sample (from Section 12.8).

A_A = Picocuries of actinide added.

A_L = Volume of sample aliquot used, in ml (specified in Section 11.5.1 as 1 ml).

A_S = Aliquot to be analyzed, in ml.

B_B = Procedure background counts measured in polonium-209 spectral region.

B_T = Polonium-209 tracer counts in sample.

C_T = Total counts in polonium-210 spectral region.

D = Decay correction for time “t” (in days) from sample collection to sample counting, given by: $D=e^{-0.005t}$

E_C = Average counting efficiency of detector (from Section 10.1.8), as counts per disintegration.

E_{Ci} = Counting efficiency of the detector for aliquot i of the actinide working solution, counts per disintegration.

E_I = Average counting efficiency of the internal proportional counter, as determined in Section 10.3.4, counts per disintegration.

E_{Ii} = Counting efficiency of the internal proportional counter for aliquot i of the 100 pCi/ml actinide working solution, counts per disintegration.

E_Y = The fraction of polonium-209 recovered on the planchet (from Section 12.7).

F= Average activity of polonium-209 in sample (from Section 10.2.4), in pCi.

F_i = activity of aliquot i of the polonium-209 tracer solution, in pCi.

L = Dilution factor (unitless). This is the volume of sample solution prepared (specified as 250 ml in Section 11.1.10) divided by the volume of the aliquot of sample solution analyzed for polonium-210 (from Section 11.7.1).

M_i = Phosphorous rock processing rate of the source being tested, during run i, Mg/hr.

M_k = Phosphate rock processed annually by source k, in Mg/yr.

n = Number of calciners at the elemental phosphorus plant.

P = Total activity of sample solution from Section 11.4.10, in pCi (see Eq. 111-4).

Q_{sd} = Volumetric flow rate of effluent stream, as determined by Method 2, in dscm/hr.

S = Annual polonium-210 emissions from the entire facility, in curies/yr.

$V_{m(std)}$ = Volume of air sample, as determined by Method 5, in dscm.

X_k = Emission rate from source k, from Section 12.10, in curies/Mg.

10^{-12} = Curies per picocurie.

2.22 = Disintegrations per minute per picocurie.

250 = Volume of solution from Section 11.4.10, in ml.

12.2 Counting Efficiency. Calculate the counting efficiency of the detector for each aliquot of the 1 pCi/ml actinide working solution using Eq. 111-1.

$$E_{Ci} = \frac{C_S - C_B}{2.22\ A_A T} \qquad Eq.\ 111\text{-}1$$

Where:

C_B = Background counts in same peak area as C_S .

C_S = Gross counts in actinide peak.

T = Counting time in minutes, specified in Section 10.1.6 as 1000 minutes.

12.3 Polonium-209 Tracer Solution Activity. Calculate the activity of each aliquot of the polonium-209 tracer solution using Eq. 111-2.

$$F_i = \frac{C_S - C_B}{2.22\ E_{Ci} T} \qquad Eq.\ 111\text{-}2$$

Where:

C_B = Background counts in the 4.88 MeV region of spectrum the in the counting time T.

C_S = Gross counts of polonium-209 in the 4.88 MeV region of the spectrum in the counting time T.

T = Counting time, specified in Section 10.1.6 as 1000 minutes.

12.4 Control Efficiency of Internal Proportional Counter. Calculate the counting efficiency of the internal proportional counter for each aliquot of the 100 pCi/ml actinide working solution using Eq. 111-3.

$$E_{Ii} = \frac{C_S - C_B}{2.22\ \mathrm{A}_A T} \qquad Eq.\ 111\text{-}3$$

Where:

C_B = Gross counts of procedure background.

C_S = Gross counts of standard.

T = Counting time in minutes, specified in Section 10.3.2 as 100 minutes.

12.5 Calculate the activity of the sample using Eq. 111-4.

$$P = \frac{250\ \left(C_S - C_B\right)}{2.22\ \overline{\mathrm{E}}_{\mathrm{I}} A_I T} \qquad Eq.\ 111\text{-}4$$

Where:

C_B = Total counts of procedure background. (See Section 11.1).

C_S = Total counts of screening sample.

T = Counting time for sample and background (which must be equal), in minutes (specified in Section 11.5.3 as 100 minutes).

12.6 Aliquot Volume. Determine the aliquot volume of the sample solution from Section 11.4.10 to be analyzed for polonium-210 , such that the aliquot contains an activity between 1 and 4 picocuries using Eq. 111-5.

$$A_s = \frac{250\ (\text{desired picocuries in aliquot})}{\mathrm{P}} \qquad Eq.\ 111\text{-}5$$

12.7 Polonium-209 Recovery. Calculate the fraction of polonium-209 recovered on the planchet, E_Y , using Eq. 111-6.

$$E_Y = \frac{B_T - B_B}{2.22\ \overline{\mathrm{F}}\ \overline{E_C}\ T} \qquad Eq.\ 111\text{-}6$$

Where:

T = Counting time, specified in Section 11.1 as 1000 minutes.

12.8 Polonium-210 Activity. Calculate the activity of polonium-210 in the Method 5 sample (including glass fiber filter and acetone rinse) using Eq. 111-7.

$$A = \frac{\left(C_T - C_B\right)\ \mathrm{L}}{2.22\ \mathrm{E}_{\mathrm{y}}\ \overline{E_C}\ T\ D} \qquad Eq.\ 111\text{-}7$$

Where:

C_B = Procedure background counts in polonium-210 spectral region.

T = Counting time, specified in Section 11.1 as 1000 minutes for all alpha spectrometry sample and background counts.

12.9 Emission Rate from Each Stack.

12.9.1 For each test run, i, on a stack, calculate the measured polonium-210 emission rate, R_{Si} , using Eq. 111-8.

$$R_{Si} = \frac{\left(10^{-12}\right) A Q_{sd}}{V_{m(std)} M_i} \qquad Eq.\ 111\text{-}8$$

12.9.2 Determine the average polonium-210 emission rate from the stack, R_S , by taking the sum of the measured emission rates for all runs, and dividing by the number of runs performed.

12.9.3 Repeat steps 12.9.1 and 12.9.2 for each stack of each calciner.

12.10 Emission Rate from Each Source. Determine the total polonium-210 emission rate, X_k , from each source, k, by taking the sum of the average emission rates from all stacks to which the source exhausts.

12.11 Annual Polonium-210 Emission Rate from Entire Facility. Determine the annual elemental phosphorus plant emissions of polonium-210, S, using Eq. 111-9.

$$S = \frac{\sum_{k=1}^{n} \left(X_k M_k \right)}{n} \qquad Eq.\ 111\text{-}9$$

13.0 Method Performance. [Reserved]

14.0 Pollution Prevention. [Reserved]

15.0 Waste Management. [Reserved]

16.0 References

1. Blanchard, R.L. “Rapid Determination of Lead-210 and Polonium-210 in Environmental Samples by Deposition on Nickel.” Anal. Chem., *38* :189, pp. 189-192. February 1966.

17.0 Tables, Diagrams, Flowcharts, and Validation Data [Reserved]

Method 114—Test Methods for Measuring Radionuclide Emissions from Stationary Sources

1. Purpose and Background

This method provides the requirements for: (1) Stack monitoring and sample collection methods appropriate for radionuclides; (2) radiochemical methods which are used in determining the amounts of radionuclides collected by the stack sampling and; (3) quality assurance methods which are conducted in conjunction with these measurements. These methods are appropriate for emissions for stationary sources. A list of references is provided.

Many different types of facilities release radionuclides into air. These radionuclides differ in the chemical and physical forms, half-lives and type of radiation emitted. The appropriate combination of sample extraction, collection and analysis for an individual radionuclide is dependent upon many interrelated factors including the mixture of other radionuclides present. Because of this wide range of conditions, no single method for monitoring or sample collection and analysis of a radionuclide is applicable to all types of facilities. Therefore, a series of methods based on "principles of measurement" are described for monitoring and sample collection and analysis which are applicable to the measurement of radionuclides found in effluent streams at stationary sources. This approach provides the user with the flexibility to choose the most appropriate combination of monitoring and sample collection and analysis methods which are applicable to the effluent stream to be measured.

2. Stack Monitoring and Sample Collection Methods

Monitoring and sample collection methods are described based on "principles of monitoring and sample collection" which are applicable to the measurement of radionuclides from effluent streams at stationary sources. Radionuclides of most elements will be in the particulate form in these effluent streams and can be readily collected using a suitable filter media. Radionuclides of hydrogen, oxygen, carbon, nitrogen, the noble gases and in some circumstances iodine will be in the gaseous form. Radionuclides of these elements will require either the use of an in-line or off-line monitor to directly measure the radionuclides, or suitable sorbers, condensers or bubblers to collect the radionuclides.

2.1 Radionuclides as Particulates. The extracted effluent stream is passed through a filter media to remove the particulates. The filter must have a high efficiency for removal of sub-micron particles. The guidance in ANSI/HPS N13.1-1999 (section 6.6.2 Filter media) shall be followed in using filter media to collect particulates (incorporated by reference—see § 61.18 of this part).

2.2 Radionuclides as Gases.

2.2.1 The Radionuclide Tritium (H-3). Tritium in the form of water vapor is collected from the extracted effluent sample by sorption, condensation or dissolution techniques. Appropriate collectors may include silica gel, molecular sieves, and ethylene glycol or water bubblers.

Tritium in the gaseous form may be measured directly in the sample stream using Method B-1, collected as a gas sample or may be oxidized using a metal catalyst to tritiated water and collected as described above.

2.2.2 Radionuclides of Iodine. Iodine is collected from an extracted sample by sorption or dissolution techniques. Appropriate collectors may include charcoal, impregnated charcoal, metal zeolite and caustic solutions.

2.2.3 Radionuclides of Argon, Krypton and Xenon. Radionuclides of these elements are either measured directly by an in-line or off-line monitor, or are collected from the extracted sample by low temperature sorption techniques, Appropriate sorbers may include charcoal or metal zeolite.

2.2.4 Radionuclides of Oxygen, Carbon, Nitrogen and Radon. Radionuclides of these elements are measured directly using an in-line or off-line monitor. Radionuclides of carbon in the form of carbon dioxide may be collected by dissolution in caustic solutions.

2.3 Definition of Terms

In-line monitor means a continuous measurement system in which the detector is placed directly in or adjacent to the effluent stream. This may involve either gross radioactivity measurements or specific radionuclide measurements. Gross measurements shall be made in conformance with the conditions specified in Methods A-4, B-2 and G-4.

Off-line monitor means a measurement system in which the detector is used to continuously measure an extracted sample of the effluent stream. This may involve either gross radioactivity measurements or specific radionuclide measurements. Gross measurements shall be made in conformance with the conditions specified in Methods A-4, B-2 and G-4.

Sample collection means a procedure in which the radionuclides are removed from an extracted sample of the effluent using a collection media. These collection media include filters, absorbers, bubblers and condensers. The collected sample is analyzed using the methods described in Section 3.

3. Radionuclide Analysis Methods

A series of methods based on “principles of measurement” are described which are applicable to the analysis of radionuclides collected from airborne effluent streams at stationary sources. These methods are applicable only under the conditions stated and within the limitations described. Some methods specify that only a single radionuclide be present in the sample or the chemically separated sample. This condition should be interpreted to mean that no other radionuclides are present in quantities which would interfere with the measurement.

Also identified (Table 1) are methods for a selected list of radionuclides. The listed radionuclides are those which are most commonly used and which have the greatest potential for causing dose to members of the public. Use of methods based on principles of measurement other than those described in this section must be approved in advance of use by the Administrator. For radionuclides not listed in Table 1, any of the described methods may be used provided the user can demonstrate that the applicability conditions of the method have been met.

The type of method applicable to the analysis of a radionuclide is dependent upon the type of radiation emitted, i.e., alpha, beta or gamma. Therefore, the methods described below are grouped according to principles of measurements for the analysis of alpha, beta and gamma emitting radionuclides.

3.1 Methods for Alpha Emitting Radionuclides

3.1.1 Method A-1, Radiochemistry-Alpha Spectrometry.

Principle: The element of interest is separated from other elements, and from the sample matrix using radiochemical techniques. The procedure may involve precipitation, ion exchange, or solvent extraction. Carriers (elements chemically similar to the element of interest) may be used. The element is deposited on a planchet in a very thin film by electrodeposition or by coprecipitation on a very small amount of carrier, such as lanthanum fluoride. The deposited element is then counted with an alpha spectrometer. The activity of the nuclide of interest is measured by the number of alpha counts in the appropriate energy region. A correction for chemical yield and counting efficiency is made using a standardized radioactive nuclide (tracer) of the same element. If a radioactive tracer is not available for the element of interest, a predetermined chemical yield factor may be used.

Applicability: This method is applicable for determining the activity of any alpha-emitting radionuclide, regardless of what other radionuclides are present in the sample provided the chemical separation step produces a very thin sample and removes all other radionuclides which could interfere in the spectral region of interest. APHA-605(2), ASTM-D-3972(13).

3.1.2 Method A-2, Radiochemistry-Alpha Counting.

Principle: The element of interest is separated from other elements, and from the sample matrix using radiochemistry. The procedure may involve precipitation, ion exchange, or solvent extraction. Carriers (elements chemically similar to the element of interest) may be used. The element is deposited on a planchet in a thin film and counted with an alpha counter. A correction for chemical yield (if necessary) is made. The alpha count rate measures the total activity of all emitting radionuclides of the separated element.

Applicability: This method is applicable for the measurement of any alpha-emitting radionuclide, provided no other alpha emitting radionuclide is present in the separated sample. It may also be applicable for determining compliance, when other radionuclides of the separated element are present, provided that the calculated emission rate is assigned to the radionuclide which could be present in the sample that has the highest dose conversion factor. IDO-12096(18).

3.1.3 Method A-3, Direct Alpha Spectrometry.

Principle: The sample, collected on a suitable filter, is counted directly on an alpha spectrometer. The sample must be thin enough and collected on the surface of the filter so that any absorption of alpha particle energy in the sample or the filter, which would degrade the spectrum, is minimal.

Applicability: This method is applicable to simple mixtures of alpha emitting radionuclides and only when the amount of particulates collected on the filter paper are relatively small and the alpha spectra is adequately resolved. Resolutions should be 50 keV (FWHM) or better, ASTM-D-3084(16).

3.1.4 Method A-4, Direct Alpha Counting (Gross alpha determination).

Principle: The sample, collected on a suitable filter, is counted with an alpha counter. The sample must be thin enough so that self-absorption is not significant and the filter must be of such a nature that the particles are retained on the surface.

Applicability: Gross alpha determinations may be used to measure emissions of specific radionuclides only (1) when it is known that the sample contains only a single radionuclide, or the identity and isotopic ratio of the radionuclides in the sample are well-known, and (2) measurements using either Method A-1, A-2 or A-5 have shown that this method provides a reasonably accurate measurement of the emission rate. Gross alpha measurements are applicable to unidentified mixtures of radionuclides only for the purposes and under the conditions described in section 3.7. APHA-601(3), ASTM-D-1943(10).

3.1.5 Method A-5, Chemical Determination of Uranium.

Principle: Uranium may be measured chemically by either colorimetry or fluorometry. In both procedures, the sample is dissolved, the uranium is oxidized to the hexavalent form and extracted into a suitable solvent. Impurities are removed from the solvent layer. For colorimetry, dibenzoylmethane is added, and the uranium is measured by the absorbance in a colorimeter. For fluorometry, a portion of the solution is fused with a sodium fluoride-lithium fluoride flux and the uranium is determined by the ultraviolet activated fluorescence of the fused disk in a fluorometer.

Applicability: This method is applicable to the measurements of emission rates of uranium when the isotopic ratio of the uranium radionuclides is well known. ASTM-E-318(15), ASTM-D-2907(14).

3.1.6 Method A-6, Radon-222—Continuous Gas Monitor.

Principle: Radon-222 is measured directly in a continuously extracted sample stream by passing the air stream through a calibrated scintillation cell. Prior to the scintillation cell, the air stream is treated to remove particulates and excess moisture. The alpha particles from radon-222 and its decay products strike a zinc sulfide coating on the inside of the scintillation cell producing light pulses. The light pulses are detected by a photomultiplier tube which generates electrical pulses. These pulses are processed by the system electronics and the read out is in pCi/l of radon-222.

Applicability: This method is applicable to the measurement of radon-222 in effluent streams which do not contain significant quantities of radon-220. Users of this method should calibrate the monitor in a radon calibration chamber at least twice per year. The background of the monitor should also be checked periodically by operating the instrument in a low radon environment. EPA 520/1-89-009(24).

3.1.7 Method A-7, Radon-222-Alpha Track Detectors

Principle: Radon-222 is measured directly in the effluent stream using alpha track detectors (ATD). The alpha particles emitted by radon-222 and its decay products strike a small plastic strip and produce submicron damage tracks. The plastic strip is placed in a caustic solution that accentuates the damage tracks which are counted using a microscope or automatic counting system. The number of tracks per unit area is correlated to the radon concentration in air using a conversion factor derived from data generated in a radon calibration facility.

Applicability: Prior approval from EPA is required for use of this method. This method is only applicable to effluent streams which do not contain significant quantities of radon-220, unless special detectors are used to discriminate against radon-220. This method may be used only when ATDs have been demonstrated to produce data comparable to data obtained with Method A-6. Such data should be submitted to EPA when requesting approval for the use of this method. EPA 520/1-89-009(24).

3.2 Methods for Gaseous Beta Emitting Radionuclides.

3.2.1 Method B-1, Direct Counting in Flow-Through Ionization Chambers.

Principle: An ionization chamber containing a specific volume of gas which flows at a given flow rate through the chamber is used. The sample (effluent stream sample) acts as the counting gas for the chamber. The activity of the radionuclide is determined from the current measured in the ionization chamber.

Applicability: This method is applicable for measuring the activity of a gaseous beta-emitting radionuclide in an effluent stream that is suitable as a counting gas, when no other beta-emitting nuclides are present. DOE/EP-0096(17), NCRP-58(23).

3.2.2 Method B-2, Direct Counting With In-line or Off-line Beta Detectors.

Principle: The beta detector is placed directly in the effluent stream (in-line) or an extracted sample of the effluent stream is passed through a chamber containing a beta detector (off-line). The activities of the radionuclides present in the effluent stream are determined from the beta count rate, and a knowledge of the radionuclides present and the relationship of the gross beta count rate and the specific radionuclide concentration.

Applicability: This method is applicable only to radionuclides with maximum beta particle energies greater then 0.2 MeV. This method may be used to measure emissions of specific radionuclides only when it is known that the sample contains only a single radionuclide or the identity and isotopic ratio of the radionuclides in the effluent stream are well known. Specific radionuclide analysis of periodic grab samples may be used to identify the types and quantities of radionuclides present and to establish the relationship between specific radionuclide analyses and gross beta count rates.

This method is applicable to unidentified mixtures of gaseous radionuclides only for the purposes and under the conditions described in section 3.7.

3.3 Methods for Non-Gaseous Beta Emitting Radionuclides.

3.3.1 Method B-3, Radiochemistry-Beta Counting.

Principle: The element of interest is separated from other elements, and from the sample matrix by radiochemistry. This may involve precipitation, distillation, ion exchange, or solvent extraction. Carriers (elements chemically similar to the element of interest) may be used. The element is deposited on a planchet, and counted with a beta counter. Corrections for chemical yield, and decay (if necessary) are made. The beta count rate determines the total activity of all radionuclides of the separated element. This method may also involve the radiochemical separation and counting of a daughter element, after a suitable period of ingrowth, in which case it is specific for the parent nuclide.

Applicability: This method is applicable for measuring the activity of any beta-emitting radionuclide, with a maximum energy greater than 0.2 MeV, provided no other radionuclide is present in the separated sample. APHA-608(5).

3.3.2 Method B-4, Direct Beta Counting (Gross beta determination).

Principle: The sample, collected on a suitable filter, is counted with a beta counter. The sample must be thin enough so that self-absorption corrections can be made.

Applicability: Gross beta measurements are applicable only to radionuclides with maximum beta particle energies greater than 0.2 MeV. Gross beta measurements may be used to measure emissions of specific radionuclides only (1) when it is known that the sample contains only a single radionuclide, and (2) measurements made using Method B-3 show reasonable agreement with the gross beta measurement. Gross beta measurements are applicable to mixtures of radionuclides only for the purposes and under the conditions described in section 3.7. APHA-602(4), ASTM-D-1890(11).

3.3.3 Method B-5, Liquid Scintillation Spectrometry.

Principle: An aliquot of a collected sample or the result of some other chemical separation or processing technique is added to a liquid scintillation “cocktail” which is viewed by photomultiplier tubes in a liquid scintillation spectrometer.

The spectrometer is adjusted to establish a channel or “window” for the pulse energy appropriate to the nuclide of interest. The activity of the nuclide of interest is measured by the counting rate in the appropriate energy channel. Corrections are made for chemical yield where separations are made.

Applicability: This method is applicable to any beta-emitting nuclide when no other radionuclide is present in the sample or the separated sample provided that it can be incorporated in the scintillation cocktail. This method is also applicable for samples which contain more than one radionuclide but only when the energies of the beta particles are sufficiently separated so that they can be resolved by the spectrometer. This method is most applicable to the measurement of low-energy beta emitters such as tritium and carbon-14. APHA-609(6), EML-LV-539-17(19).

3.4 Gamma Emitting Radionuclides

3.4.1 Method G-1, High Resolution Gamma Spectrometry.

Principle: The sample is counted with a high resolution gamma detector, usually either a Ge(Li) or a high purity Ge detector, connected to a multichannel analyzer or computer. The gamma emitting radionuclides in the sample are measured from the gamma count rates in the energy regions characteristic of the individual radionuclide. Corrections are made for counts contributed by other radionuclides to the spectral regions of the radionuclides of interest. Radiochemical separations may be made prior to counting but are usually not necessary.

Applicability: This method is applicable to the measurement of any gamma emitting radionuclide with gamma energies greater than 20 keV. It can be applied to complex mixtures of radionuclides. The samples counted may be in the form of particulate filters, absorbers, liquids or gases. The method may also be applied to the analysis of gaseous gamma emitting radionuclides directly in an effluent stream by passing the stream through a chamber or cell containing the detector. ASTM-3649(9), IDO-12096(18).

3.4.2 Method G-2, Low Resolution Gamma Spectrometry.

Principle: The sample is counted with a low resolution gamma detector, a thallium activated sodium iodide crystal. The detector is coupled to a photomultiplier tube and connected to a multichannel analyzer. The gamma emitting radionuclides in the sample are measured from the gamma count rates in the energy regions characteristic of the individual radionuclides. Corrections are made for counts contributed by other radionuclides to the spectral regions of the radionuclides of interest. Radiochemical separation may be used prior to counting to obtain less complex gamma spectra if needed.

Applicability: This method is applicable to the measurement of gamma emitting radionuclides with energies greater than 100 keV. It can be applied only to relatively simple mixtures of gamma emitting radionuclides. The samples counted may be in the form of particulate filters, absorbers, liquids or gas. The method can be applied to the analysis of gaseous radionuclides directly in an effluent stream by passing the gas stream through a chamber or cell containing the detector. ASTM-D-2459(12), EMSL-LV-0539-17(19).

3.4.3 Method G-3, Single Channel Gamma Spectrometry.

Principle: The sample is counted with a thallium activated sodium iodide crystal. The detector is coupled to a photomultiplier tube connected to a single channel analyzer. The activity of a gamma emitting radionuclide is determined from the gamma counts in the energy range for which the counter is set.

Applicability: This method is applicable to the measurement of a single gamma emitting radionuclide. It is not applicable to mixtures of radionuclides. The samples counted may be in the form of particulate filters, absorbers, liquids or gas. The method can be applied to the analysis of gaseous radionuclides directly in an effluent stream by passing the gas stream through a chamber or cell containing the detector.

3.4.4 Method G-4, Gross Gamma Counting.

Principle: The sample is counted with a gamma detector usually a thallium activated sodium iodine crystal. The detector is coupled to a photomultiplier tube and gamma rays above a specific threshold energy level are counted.

Applicability: Gross gamma measurements may be used to measure emissions of specific radionuclides only when it is known that the sample contains a single radionuclide or the identity and isotopic ratio of the radionuclides in the effluent stream are well known. When gross gamma measurements are used to determine emissions of specific radionuclides periodic measurements using Methods G-1 or G-2 should be made to demonstrate that the gross gamma measurements provide reliable emission data. This method may be applied to analysis of gaseous radionuclides directly in an effluent stream by placing the detector directly in or adjacent to the effluent stream or passing an extracted sample of the effluent stream through a chamber or cell containing the detector.

3.5 Counting Methods. All of the above methods with the exception of Method A-5 involve counting the radiation emitted by the radionuclide. Counting methods applicable to the measurement of alpha, beta and gamma radiations are listed below. The equipment needed and the counting principles involved are described in detail in ASTM-3648(8).

3.5.1 Alpha Counting:

- *Gas Flow Proportional Counters.* The alpha particles cause ionization in the counting gas and the resulting electrical pulses are counted. These counters may be windowless or have very thin windows.

- *Scintillation Counters.* The alpha particles transfer energy to a scintillator resulting in a production of light photons which strike a photomultiplier tube converting the light photons to electrical pulses which are counted. The counters may involve the use of solid scintillation materials such as zinc sulfide or liquid scintillation solutions.

- *Solid-State Counters.* Semiconductor materials, such as silicon surface-barrier p-n junctions, act as solid ionization chambers. The alpha particles interact which the detector producing electron hole pairs. The charged pair is collected by an applied electrical field and the resulting electrical pulses are counted.

- *Alpha Spectrometers.* Semiconductor detectors used in conjunction with multichannel analyzers for energy discrimination.

3.5.2 Beta Counting:

- *Ionization Chambers.* These chambers contain the beta-emitting nuclide in gaseous form. The ionization current produced is measured.

- *Geiger-Muller (GM) Counters-or Gas Flow Proportional Counters.* The beta particles cause ionization in the counting gas and the resulting electrical pulses are counted. Proportional gas flow counters which are heavily shielded by lead or other metal, and provided with an anti-coincidence shield to reject cosmic rays, are called low background beta counters.

- *Scintillation Counters.* The beta particles transfer energy to a scintillator resulting in a production of light photons, which strike a photomultiplier tube converting the light photon to electrical pulses which are counted. This may involve the use of anthracene crystals, plastic scintillator, or liquid scintillation solutions with organic phosphors.

- *Liquid Scintillation Spectrometers.* Liquid scintillation counters which use two photomultiplier tubes in coincidence to reduce background counts. This counter may also electronically discriminate among pulses of a given range of energy.

3.5.3 Gamma Counting:

- *Low-Resolution Gamma Spectrometers.* The gamma rays interact with thallium activated sodium iodide or cesium iodide crystal resulting in the release of light photons which strike a photomultiplier tube converting the light pulses to electrical pulses proportional to the energy of the gamma ray. Multi-channel analyzers are used to separate and store the pulses according to the energy absorbed in the crystal.

- *High-Resolution gamma Spectrometers.* Gamma rays interact with a lithium-drifted (Ge(Li)) or high-purity germanium (HPGe) semiconductor detectors resulting in a production of electron-hole pairs. The charged pair is collected by an applied electrical field. A very stable low noise preamplifier amplifies the pulses of electrical charge

resulting from the gamma photon interactions. Multichannel analyzers or computers are used to separate and store the pulses according to the energy absorbed in the crystal.

• *Single Channel Analyzers.* Thallium activated sodium iodide crystals used with a single window analyzer. Pulses from the photomultiplier tubes are separated in a single predetermined energy range.

3.5.4 Calibration of Counters. Counters are calibrated for specific radionuclide measurements using a standard of the radionuclide under either identical or very similar conditions as the sample to be counted. For gamma spectrometers a series of standards covering the energy range of interest may be used to construct a calibration curve relating gamma energy to counting efficiency.

In those cases where a standard is not available for a radionuclide, counters may be calibrated using a standard with energy characteristics as similar as possible to the radionuclide to be measured. For gross alpha and beta measurements of the unidentified mixtures of radionuclides, alpha counters are calibrated with a natural uranium standard and beta counters with a cesium-137 standard. The standard must contain the same weight and distribution of solids as the samples, and be mounted in an identical manner. If the samples contain variable amounts of solids, calibration curves relating weight of solids present to counting efficiency are prepared. Standards other than those prescribed may be used provided it can be shown that such standards are more applicable to the radionuclide mixture measured.

3.6 Radiochemical Methods for Selected Radionuclides. Methods for a selected list of radionuclides are listed in Table 1. The radionuclides listed are those which are most commonly used and which have the greatest potential for causing doses to members of the public. For radionuclides not listed in Table 1, methods based on any of the applicable “principles of measurement” described in section 3.1 through 3.4 may be used.

3.7 Applicability of Gross Alpha and Beta Measurements to Unidentified Mixtures of Radionuclides. Gross alpha and beta measurements may be used as a screening measurement as a part of an emission measurement program to identify the need to do specific radionuclide analyses or to confirm or verify that unexpected radionuclides are not being released in significant quantities.

Gross alpha (Method A-4) or gross beta (Methods B-2 or B-4) measurements may also be used for the purpose of comparing the measured concentrations in the effluent stream with the limiting “Concentration Levels for Environmental Compliance” in table 2 of appendix E. For unidentified mixtures, the measured concentration value shall be compared with the lowest environmental concentration limit for any radionuclide which is not known to be absent from the effluent stream.

Table 1—List of Approved Methods for Specific Radionuclides

Radionuclide	**Approved methods of analysis**
Am-241	A-1, A-2, A-3, A-4
Ar-41	B-1, B-2, G-1, G-2, G-3, G-4
Ba-140	G-1, G-2, G-3, G-4
Br-82	G-1, G-2, G-3, G-4
C-11	B-1, B-2, G-1, G-2, G-3, G-4
C-14	B-5
Ca-45	B-3, B-4, B-5
Ce-144	G-1, G-2, G-3, G-4
Cm-244	A-1, A-2, A-3, A-4
Co-60	G-1, G-2, G-3, G-4
Cr-51	G-1, G-2, G-3, G-4
Cs-134	G-1, G-2, G-3, G-4
Cs-137	G-1, G-2, G-3, G-4
Fe-55	B-5, G-1

Radionuclide	Approved methods of analysis
Fe-59	G-1, G-2, G-3, G-4
Ga-67	G-1, G-2, G-3, G-4
H-3 (H_2O)	B-5
H-3 (gas)	B-1
I-123	G-1, G-2, G-3, G-4
I-125	G-1
I-131	G-1, G-2, G-3, G-4
In-113m	G-1, G-2, G-3, G-4
Ir-192	G-1, G-2, G-3, G-4
Kr-85	B-1, B-2, B-5, G-1, G-2, G-3, G-4
Kr-87	B-1, B-2, G-1, G-2, G-3, G-4
Kr-88	B-1, B-2, G-1, G-2, G-3, G-4
Mn-54	G-1, G-2, G-3, G-4
Mo-99	G-1, G-2, G-3, G-4
N-13	B-1, B-2, G-1, G-2, G-3, G-4
O-15	B-1, B-2, G-1, G-2, G-3, G-4
P-32	B-3, B-4, B-5
Pm-147	B-3, B-4, B-5
Po-210	A-1, A-2, A-3, A-4
Pu-238	A-1, A-2, A-3, A-4
Pu-239	A-1, A-2, A-3, A-4
Pu-240	A-1, A-2, A-3, A-4
Ra-226	A-1, A-2, G-1, G-2
S-35	B-5
Se-75	G-1, G-2, G-3, G-4
Sr-90	B-3, B-4, B-5
Tc-99	B-3, B-4, B-5
Te-201	G-1, G-2, G-3, G-4
Uranium (total alpha)	A-1, A-2, A-3, A-4
Uranium (Isotopic)	A-1, A-3
Uranium (Natural)	A-5
Xe-133	G-1
Yb-169	G-1, G-2, G-3, G-4
Zn-65	G-1, G-2, G-3, G-4

4. Quality Assurance Methods

Each facility required to measure their radionuclide emissions shall conduct a quality assurance program in conjunction with the radionuclide emission measurements. This program shall assure that the emission measurements are representative, and are of known precision and accuracy and shall include administrative controls to assure prompt response when emission measurements indicate unexpectedly large emissions. The program shall consist of a system of policies, organizational responsibilities, written procedures, data quality specifications, audits, corrective actions and reports. This quality assurance program shall include the following program elements:

4.1 The organizational structure, functional responsibilities, levels of authority and lines of communications for all activities related to the emissions measurement program shall be identified and documented.

4.2 Administrative controls shall be prescribed to ensure prompt response in the event that emission levels increase due to unplanned operations.

4.3 The sample collection and analysis procedures used in measuring the emissions shall be described including where applicable:

4.3.1 Identification of sampling sites and number of sampling points, including the rationale for site selections.

4.3.2 A description of sampling probes and representativeness of the samples.

4.3.3 A description of any continuous monitoring system used to measure emissions, including the sensitivity of the system, calibration procedures and frequency of calibration.

4.3.4 A description of the sample collection systems for each radionuclide measured, including frequency of collection, calibration procedures and frequency of calibration.

4.3.5 A description of the laboratory analysis procedures used for each radionuclide measured, including frequency of analysis, calibration procedures and frequency of calibration.

4.3.6 A description of the sample flow rate measurement systems or procedures, including calibration procedures and frequency of calibration.

4.3.7 A description of the effluent flow rate measurement procedures, including frequency of measurements, calibration procedures and frequency of calibration.

4.4 The objectives of the quality assurance program shall be documented and shall state the required precision, accuracy and completeness of the emission measurement data including a description of the procedures used to assess these parameters. Accuracy is the degree of agreement of a measurement with a true or known value. Precision is a measure of the agreement among individual measurements of the same parameters under similar conditions. Completeness is a measure of the amount of valid data obtained compared to the amount expected under normal conditions.

4.5 A quality control program shall be established to evaluate and track the quality of the emissions measurement data against preset criteria. The program should include where applicable a system of replicates, spiked samples, split samples, blanks and control charts. The number and frequency of such quality control checks shall be identified.

4.6 A sample tracking system shall be established to provide for positive identification of samples and data through all phases of the sample collection, analysis and reporting system. Sample handling and preservation procedures shall be established to maintain the integrity of samples during collection, storage and analysis.

4.7 Regular maintenance, calibration and field checks shall be performed for each sampling system in use by satisfying the requirements found in Table 2: Maintenance, Calibration and Field Check Requirements.

Table 2—Maintenance, Calibration and Field Check Requirements

Sampling system components	**Frequency of activity**
Cleaning of thermal anemometer elements	As required by application.
Inspect pitot tubes for contaminant deposits	At least annually.
Inspect pitot tube systems for leaks	At least annually.
Inspect sharp-edged nozzles for damage	At least annually or after maintenance that could cause damage.
Check nozzles for alignment, presence of deposits, or other potentially degrading factors	Annually.
Check transport lines of HEPA-filtered applications to determine if cleaning is required	Annually.

Sampling system components	Frequency of activity
Clean transport lines	Visible deposits for HEPA-filtered applications. Mean mass of deposited material exceeds 1g/$m^2$for other applications.
Inspect or test the sample transport system for leaks	At least annually.
Check mass flow meters of sampling systems with a secondary or transfer standard	At least quarterly.
Inspect rotameters of sampling systems for presence of foreign matter	At the start of each sampling period.
Check response of stack flow rate systems	At least quarterly.
Calibration of flow meters of sampling systems	At least annually.
Calibration of effluent flow measurement devices	At least annually.
Calibration of timing devices	At least annually.

4.8 Periodic internal and external audits shall be performed to monitor compliance with the quality assurance program. These audits shall be performed in accordance with written procedures and conducted by personnel who do not have responsibility for performing any of the operations being audited.

4.9 A corrective action program shall be established including criteria for when corrective action is needed, what corrective actions will be taken and who is responsible for taking the corrective action.

4.10 Periodic reports to responsible management shall be prepared on the performance of the emissions measurements program. These reports should include assessment of the quality of the data, results of audits and description of corrective actions.

4.11 The quality assurance program should be documented in a quality assurance project plan that should address each of the above requirements.

5. References

(1) American National Standards Institute “Guide to Sampling Airborne Radioactive Materials in Nuclear Facilities”, ANSI-N13.1-1969, American National Standards Institute, New York, New York (1969).

(2) American Public Health Association, “Methods of Air Sampling”, 2nd Edition, Method 605, “Tentative Method of Analysis for Plutonium Content of Atmospheric Particulate Matter”. American Public Health Association, New York, NY (1977).

(3) Ibid, Method 601, “Tentative Method of Analysis for Gross Alpha Radioactivity Content of the Atmosphere”.

(4) Ibid, Method 602, “Tentative Method of the Analysis for Gross Beta Radioactivity Content of the Atmosphere”.

(5) Ibid, Method 608, “Tentative Method of Analysis for Strontium-90 Content of Atmospheric Particulate Matter”.

(6) Ibid, Method 609, “Tentative Method of Analysis for Tritium Content of the Atmosphere”.

(7) Ibid, Method 603, “Tentative Method of Analysis for Iodine-131 Content of the Atmosphere”.

(8) American Society for Testing and Materials, 1986 Annual Book ASTM Standards, Designation D-3648-78, “Standard Practices for the Measurement of Radioactivity”. American Society for Testing and Materials, Philadelphia, PA (1986).

(9) Ibid, Designation D-3649-85, “Standard Practice for High Resolution Gamma Spectrometry”.

(10) Ibid, Designation D-1943-81, “Standard Test Method for Alpha Particle Radioactivity of Water”.

(11) Ibid, Designation D-1890-81, “Standard Test Method for Beta Particle Radioactivity of Water”.

(12) Ibid, Designation D-2459-72, “Standard Test Method for Gamma Spectrometry of Water”.

(13) Ibid, Designation D-3972-82, “Standard Test Method for Isotopic Uranium in Water by Radiochemistry”.

(14) Ibid, Designation D-2907-83, “Standard Test Methods for Microquantities of Uranium in Water by Fluorometry”.

(15) Ibid, Designation E-318, “Standard Test Method for Uranium in Aqueous Solutions by Colorimetry”.

(16) Ibid, Designation D-3084-75, “Standard Practice for Alpha Spectrometry of Water”.

(17) Corley, J.P. and C.D. Corbit, “A Guide for Effluent Radiological Measurements at DOE Installations”, DOE/EP-0096, Pacific Northwest Laboratories, Richland, Washington (1983).

(18) Department of Energy, “RESL Analytical Chemistry Branch Procedures Manual”, IDO-12096, U.S. Department of Energy, Idaho Falls, Idaho (1982).

(19) Environmental Protection Agency, “Radiochemical Analytical Procedures for Analysis of Environmental Samples”, EMSL-LV-0539-17, U.S. Environmental Protection Agency, Environmental Monitoring and Support Laboratory, Las Vegas, Nevada (1979).

(20) Environmental Protection Agency, “Radiochemistry Procedures Manual”, EPA 520/5-84-006, Eastern Environmental Radiation Facility, Montgomery, Alabama (1984).

(21) National Council on Radiation Protection and Measurements, NCRP Report No. 50, “Environmental Radiation Measurements”, National Council on Radiation Protection and Measurement, Bethesda, Maryland (1976).

(22) Ibid, Report No. 47, “Tritium Measurement Techniques”. (1976).

(23) Ibid, Report No. 58 “A Handbook of Radioactivity Measurement Procedures” (1985).

(24) Environmental Protection Agency, “Indoor Radon and Radon Decay Product Measurement Protocols”, EPA 520/1-89-009, U.S. Environmental Protection Agency, Washington, DC (1989).

Method 115—Monitoring for Radon-222 Emissions

This appendix describes the monitoring methods which must be used in determining the radon-222 emissions from underground uranium mines, uranium mill tailings piles, phosphogypsum stacks, and other piles of waste material emitting radon.

1. Radon-222 Emissions from Underground Uranium Mine Vents

1.1 Sampling Frequency and Calculation of Emissions. Radon-222 emissions from underground uranium mine vents shall be determined using one of the following methods:

1.1.1 Continuous Measurement. These measurements shall be made and the emissions calculated as follows:

(a) The radon-222 concentration shall be continuously measured at each mine vent whenever the mine ventilation system is operational.

(b) Each mine vent exhaust flow rate shall be measured at least 4 times per year.

(c) A weekly radon-222 emission rate for the mine shall be calculated and recorded weekly as follows:

$A_w = C_1 Q_1 T_1 + C_2 Q_2 T_2 + . . . C_i Q_i T_i$

Where:

A_w =Total radon-222 emitted from the mine during week (Ci)

C_i =Average radon-222 concentration in mine vent i(Ci/m^3)

Q_i =Volumetric flow rate from mine vent i(m^3 /hr)

T_i =Hours of mine ventilation system operation during week for mine vent i(hr)

(d) The annual radon-222 emission rate is the sum of the weekly emission rates during a calendar year.

1.1.2 Periodic Measurement. This method is applicable only to mines that continuously operate their ventilation system except for extended shutdowns. Mines which start up and shut down their ventilation system frequently must use the continuous measurement method describe in Section 1.1.1 above. Emission rates determined using periodic measurements shall be measured and calculated as follows:

(a) The radon-222 shall be continuously measured at each mine vent for at least one week every three months.

(b) Each mine vent exhaust flow rate shall be measured at least once during each of the radon-222 measurement periods.

(c) A weekly radon-222 emission rate shall be calculated for each weekly period according to the method described in Section 1.1.1. In this calculation T=168 hr.

(d) The annual radon-222 emission rate from the mine should be calculated as follows:

$$A_y = \frac{52 - W_s}{n} \left(A_{w1} + A_{w2} + \cdots A_{wi} \right)$$

Where:

A_y =Annual radon-222 emission rate from the mine(Ci)

A_{wi} =Weekly radon-222 emission rate during the measurement period i (Ci)

n=Number of weekly measurement periods per year

W_s =Number of weeks during the year that the mine ventilation system is shut down in excess of 7 consecutive days, i.e. the sum of the number of weeks each shut down exceeds 7 days

1.2 Test Methods and Procedures

Each underground mine required to test its emissions, unless an equivalent or alternative method has been approved by the Administrator, shall use the following test methods:

1.2.1 Test Method 1 of appendix A to part 60 shall be used to determine velocity traverses. The sampling point in the duct shall be either the centroid of the cross section or the point of average velocity.

1.2.2 Test Method 2 of appendix A to part 60 shall be used to determine velocity and volumetric flow rates.

1.2.3 Test Methods A-6 or A-7 of appendix B, Method 114 to part 61 shall be used for the analysis of radon-222. Use of Method A-7 requires prior approval of EPA based on conditions described in appendix B.

1.2.4 A quality assurance program shall be conducted in conformance with the programs described for Continuous Radon Monitors and Alpha Track Detectors in EPA 520/1-89-009. (2)

2. Radon-222 Emissions from Uranium Mill Tailings Piles

2.1 Measurement and Calculation of Radon Flux from Uranium Mill Tailings Piles.

2.1.1 Frequency of Flux Measurement. A single set of radon flux measurements may be made, or if the owner or operator chooses, more frequent measurements may be made over a one year period. These measurements may involve quarterly, monthly or weekly intervals. All radon measurements shall be made as described in paragraphs 2.1.2 through 2.1.6 except that for measurements made over a one year period, the requirement of paragraph 2.1.4(c) shall not apply. The mean radon flux from the pile shall be the arithmetic mean of the mean radon flux for each measurement period. The weather conditions, moisture content of the tailings and area of the pile covered by water existing at the time of the measurement shall be chosen so as to provide measurements representative of the long term radon flux from the pile and shall be subject to EPA review and approval.

2.1.2 Distribution of Flux Measurements. The distribution and number of radon flux measurements required on a pile will depend on clearly defined areas of the pile (called regions) that can have significantly different radon fluxes due to surface conditions. The mean radon flux shall be determined for each individual region of the pile. Regions that shall be considered for operating mill tailings piles are:

(a) Water covered areas,

(b) Water saturated areas (beaches),

(c) Dry top surface areas, and

(d) Sides, except where earthen material is used in dam construction.

For mill tailings after disposal the pile shall be considered to consist of only one region.

2.1.3 Number of Flux Measurements. Radon flux measurements shall be made within each region on the pile, except for those areas covered with water. Measurements shall be made at regularly spaced locations across the surface of the region, realizing that surface roughness will prohibit measurements in some areas of a region. The minimum number of flux measurements considered necessary to determine a representative mean radon flux value for each type of region on an operating pile is:

(a) Water covered area—no measurements required as radon flux is assumed to be zero,

(b) Water saturated beaches—100 radon flux measurements,

(c) Loose and dry top surface—100 radon flux measurements,

(d) Sides—100 radon flux measurements, except where earthern material is used in dam construction.

For a mill tailings pile after disposal which consists of only one region a minimum of 100 measurements are required.

2.1.4 Restrictions to Radon Flux Measurements. The following restrictions are placed on making radon flux measurements:

(a) Measurements shall not be initiated within 24 hours of a rainfall.

(b) If a rainfall occurs during the 24 hour measurements period, the measurement is invalid if the seal around the lip of the collector has washed away or if the collector is surrounded by water.

(c) Measurements shall not be performed if the ambient temperature is below 35 °F or if the ground is frozen.

2.1.5 Areas of Pile Regions. The approximate area of each region of the pile shall be determined in units of square meters.

2.1.6 Radon Flux Measurement. Measuring radon flux involves the adsorption of radon on activated charcoal in a large-area collector. The radon collector is placed on the surface of the pile area to be measured and allowed to collect radon for a time period of 24 hours. The radon collected on the charcoal is measured by gamma-ray spectroscopy. The detailed measurement procedure provided in appendix A of EPA 520/5-85-0029(1) shall be used to measure the radon flux on uranium mill tailings, except the surface of the tailings shall not be penetrated by the lip of the radon collector as directed in the procedure, rather the collector shall be carefully positioned on a flat surface with soil or tailings used to seal the edge.

2.1.7 Calculations. The mean radon flux for each region of the pile and for the total pile shall be calculated and reported as follows:

(a) The individual radon flux calculations shall be made as provided in appendix A EPA 86 (1). The mean radon flux for each region of the pile shall be calculated by summing all individual flux measurements for the region and dividing by the total number of flux measurements for the region.

(b) The mean radon flux for the total uranium mill tailings pile shall be calculated as follows.

$$J_s = \frac{J_1 A_1 + \cdots J_2 A_2 \cdots J_i A_i}{A_t}$$

Where:

J_s =Mean flux for the total pile (pCi/m^2 -s)

J_i =Mean flux measured in region i (pCi/m^2 -s)

A_i =Area of region i (m^2)

A_t =Total area of the pile (m^2)

2.1.8 Reporting. The results of individual flux measurements, the approximate locations on the pile, and the mean radon flux for each region and the mean radon flux for the total stack shall be included in the emission test report. Any condition or unusual event that occurred during the measurements that could significantly affect the results should be reported.

3.0 Radon-222 Emissions from Phosphogypsum Stacks.

3.1 Measurement and Calculation of the Mean Radon Flux. Radon flux measurements shall be made on phosphogypsum stacks as described below:

3.1.1 Frequency of Measurements. A single set of radon flux measurements may be made after the phosphogypsum stack becomes inactive, or if the owner or operator chooses, more frequent measurements may be made over a one year period. These measurements may involve quarterly, monthly or weekly intervals. All radon measurements shall be made as described in paragraphs 3.1.2 through 3.1.6 except that for measurements made

over a one year period, the requirement of paragraph 3.1.4(c) shall not apply. For measurements made over a one year period, the radon flux shall be the arithmetic mean of the mean radon flux for each measurement period.

3.1.2 Distribution and Number of Flux Measurements. The distribution and number of radon flux measurements required on a stack will depend on clearly defined areas of the stack (called regions) that can have significantly different radon fluxes due to surface conditions. The mean radon flux shall be determined for each individual region of the stack. Regions that shall be considered are:

(a) Water covered areas,

(b) Water saturated areas (beaches),

(c) Loose and dry top surface areas,

(d) Hard-packed roadways, and

(e) Sides.

3.1.3 Number of Flux Measurements. Radon flux measurements shall be made within each region on the phosphogypsum stack, except for those areas covered with water. Measurements shall be made at regularly spaced locations across the surface of the region, realizing that surface roughness will prohibit measurements in some areas of a region. The minimum number of flux measurements considered necessary to determine a representative mean radon flux value for each type of region is:

(a) Water covered area—no measurements required as radon flux is assumed to be zero,

(b) Water saturated beaches—50 radon flux measurements,

(c) Loose and dry top surface—100 radon flux measurements,

(d) Hard-packed roadways—50 radon flux measurements, and

(e) Sides—100 radon flux measurements.

A minimum of 300 measurements are required. A stack that has no water cover can be considered to consist of two regions, top and sides, and will require a minimum of only 200 measurements.

3.1.4 Restrictions to Radon Flux Measurements. The following restrictions are placed on making radon flux measurements:

(a) Measurements shall not be initiated within 24 hours of a rainfall.

(b) If a rainfall occurs during the 24 hour measurement period, the measurement is invalid if the seal around the lip of the collector has washed away or if the collector is surrounded by water.

(c) Measurements shall not be performed if the ambient temperature is below 35 °F or if the ground is frozen.

3.1.5 Areas of Stack Regions. The approximate area of each region of the stack shall be determined in units of square meters.

3.1.6 Radon Flux Measurements. Measuring radon flux involves the adsorption of radon on activated charcoal in a large-area collector. The radon collector is placed on the surface of the stack area to be measured and allowed to collect radon for a time period of 24 hours. The radon collected on the charcoal is measured by gamma-ray spectroscopy. The detailed measurement procedure provided in appendix A of EPA 520/5-85-0029(1) shall be used to measure the radon flux on phosphogypsum stacks, except the surface of the phosphogypsum shall not be

penetrated by the lip of the radon collector as directed in the procedure, rather the collector shall be carefully positioned on a flat surface with soil or phosphogypsum used to seal the edge.

3.1.7 Calculations. The mean radon flux for each region of the phosphogypsum stack and for the total stack shall be calculated and reported as follows:

(a) The individual radon flux calculations shall be made as provided in appendix A EPA 86 (1). The mean radon flux for each region of the stack shall be calculated by summing all individual flux measurements for the region and dividing by the total number of flux measurements for the region.

(b) The mean radon flux for the total phosphogypsum stack shall be calculated as follows.

$$J_s = \frac{J_1 A_1 + J_2 A_2 + \cdots J_i A_i}{A_t}$$

Where:

J_s =Mean flux for the total stack (pCi/m^2 -s)

J_i =Mean flux measured in region i (pCi/m^2 -s)

A_i =Area of region i (m^2)

A_t =Total area of the stack

3.1.8 Reporting. The results of individual flux measurements, the approximate locations on the stack, and the mean radon flux for each region and the mean radon flux for the total stack shall be included in the emission test report. Any condition or unusual event that occurred during the measurements that could significantly affect the results should be reported.

4.0 Quality Assurance Procedures for Measuring Rn-222 Flux

A. Sampling Procedures

Records of field activities and laboratory measurements shall be maintained. The following information shall be recorded for each charcoal canister measurement:

(a) Site

(b) Name of pile

(c) Sample location

(d) Sample ID number

(e) Date and time on

(f) Date and time off

(g) Observations of meteorological conditions and comments

Records shall include all applicable information associated with determining the sample measurement, calculations, observations, and comments.

B. Sample Custody

Custodial control of all charcoal samples exposed in the field shall be maintained in accordance with EPA chain-of-custody field procedures. A control record shall document all custody changes that occur between the field and laboratory personnel.

C. Calibration Procedures and Frequency

The radioactivity of two standard charcoal sources, each containing a carefully determined quantity of radium-226 uniformly distributed through 180g of activated charcoal, shall be measured. An efficiency factor is computed by dividing the average measured radioactivity of the two standard charcoal sources, minus the background, in cpm by the known radioactivity of the charcoal sources in dpm. The same two standard charcoal sources shall be counted at the beginning and at the end of each day's counting as a check of the radioactivity counting equipment. A background count using unexposed charcoal should also be made at the beginning and at the end of each counting day to check for inadvertent contamination of the detector or other changes affecting the background. The unexposed charcoal comprising the blank is changed with each new batch of charcoal used.

D. Internal Quality Control Checks and Frequency

The charcoal from every tenth exposed canister shall be recounted. Five percent of the samples analyzed shall be either blanks (charcoal having no radioactivity added) or samples spiked with known quantities of radium-226.

E. Data Precision, Accuracy, and Completeness

The precision, accuracy, and completeness of measurements and analyses shall be within the following limits for samples measuring greater than 1.0 pCi/m^2 −s.

(a) Precision: 10%

(b) Accuracy: ±10%

(c) Completeness: at least 85% of the measurements must yield useable results.

5.0 References

(1) Hartley, J.N. and Freeman, H.D., “Radon Flux Measurements on Gardinier and Royster phosphogypsum Piles Near Tampa and Mulberry, Florida,” U.S. Environmental Protection Agency Report, EPA 520/5-85-029, January 1986.

(2) Environmental Protection Agency, “Indoor Radon and Radon Decay Product Measurement Protocols”, EPA 520/1-89-009, U.S. Environmental Protection Agency, Washington, DC. (1989).

[38 FR 8826, Apr. 6, 1973]

EDITORIAL NOTES: 1. For FEDERAL REGISTER citations to appendix B see the List of CFR Sections Affected, which appears in the Finding Aids section of the printed volume and at *www.fdsys.gov* .

2. At 65 FR 62161, Oct. 17, 2000, appendix B to part 61 was amended by revising Methods 101, 101A, 102, 103, 104, 105, 106, 107, 107A, 108, 108A, 108B, 108C, and 111. However, because the amendment contains no revised text for Method 107A, this part of the revision could not be incorporated.

Appendix C to Part 61—Quality Assurance Procedures

Procedure 1—Determination of Adequate Chromatographic Peak Resolution

In this method of dealing with resolution, the extent to which one chromatographic peak overlaps another is determined.

For convenience, consider the range of the elution curve of each compound as running from −2σ to +2σ. This range is used in other resolution criteria, and it contains 95.45 percent of the area of a normal curve. If two peaks are separated by a known distance, b, one can determine the fraction of the area of one curve that lies within the range of the other. The extent to which the elution curve of a contaminant compound overlaps the curve of a compound that is under analysis is found by integrating the contaminant curve over the limits $b-2\sigma_s$ to $b+2\sigma_s$, where σ_s is the standard deviation of the sample curve.

This calculation can be simplified in several ways. Overlap can be determined for curves of unit area; then actual areas can be introduced. Desired integration can be resolved into two integrals of the normal distribution function for which there are convenient calculation programs and tables. An example would be Program 15 in Texas Instruments Program Manual ST1, 1975, Texas Instruments, Inc., Dallas, Texas 75222.

$$\frac{1}{\sqrt{2\pi}\sigma_c}\int_{b-2\sigma_s}^{b+2\sigma_s} e^{\left(\frac{-t^2}{2\sigma_c^2}\right)}dt = \frac{1}{\sqrt{2\pi}}\int_{\frac{b-2\sigma_s}{\sigma_c}}^{\infty} e^{\left(\frac{-x^2}{2}\right)}dx - \frac{1}{\sqrt{2\pi}}\int_{\frac{b+2\sigma_s}{\sigma_c}}^{\infty} e^{\left(\frac{-x^2}{2}\right)}dx$$

The following calculation steps are required:*

1. $2\sigma_s = t_s/\sqrt{2 \ln 2}$
2. $\sigma_c = t_c/2\sqrt{2 \ln 2}$
3. $x_1 = (b-2\sigma_s)/\sigma_c$
4. $x_2 = (b+2\sigma_s)/\sigma_c$
5. $Q(x_1) = \frac{1}{\sqrt{2\pi}}\int_{x_1}^{\infty} e^{\left(\frac{-x^2}{2}\right)}dx$
6. $Q(x_2) = \frac{1}{\sqrt{2\pi}}\int_{x_2}^{\infty} e^{\left(\frac{-x^2}{2}\right)}dx$
7. $I_o = Q(x_1) - Q(x_2)$
8. $A_o = I_o A_c/A_s$
9. Percentage overlap = $A_o \times 100$,

where:

A_s = Area of the sample peak of interest determined by electronic integration or by the formula $A_s = h_s t_s$

A_c = Area of the contaminant peak, determined in the same manner as A_s.

b = Distance on the chromatographic chart that separates the maxima of the two peaks.

H_s = Peak height of the sample compound of interest, measured from the average value of the baseline to the maximum of the curve.

t_s = Width of sample peak of interest at 1/2 peak height.

t_c = Width of the contaminant peak at 1/2 of peak height.

σ_s = Standard deviation of the sample compound of interest elution curve.

σ_c = Standard deviation of the contaminant elution curve.

$Q(x_1)$ = Integral of the normal distribution function from x_1 to infinity.

$Q(x_2)$ = Integral of the normal distribution function from x_2 to infinity.

I_o = Overlap integral.

A_o = Area overlap fraction.

*In most instances, $Q(x_2)$ is very small and may be neglected.

In judging the suitability of alternate GC columns or the effects of altering chromatographic conditions, one can employ the area overlap as the resolution parameter with a specific maximum permissible value.

The use of Gaussian functions to describe chromatographic elution curves is widespread. However, some elution curves are highly asymmetric. In cases where the sample peak is followed by a contaminant that has a leading edge that rises sharply but the curve then tails off, it may be possible to define an effective width for t_c as “twice the distance from the leading edge to a perpendicular line through the maxim of the contaminant curve, measured along a perpendicular bisection of that line.”

Procedure 2—Procedure for Field Auditing GC Analysis

Responsibilities of audit supervisor and analyst at the source sampling site include the following:

A. The audit supervisor verifies that audit cylinders are stored in a safe location both before and after the audit to prevent vandalism.

B. At the beginning and conclusion of the audit, the analyst records each cylinder number and pressure. An audit cylinder is never analyzed when the pressure drops below 200 psi.

C. During the audit, the analyst performs a minimum of two consecutive analyses of each audit cylinder gas. The audit must be conducted to coincide with the analysis of source test samples, normally immediately after GC calibration and prior to sample analyses.

D. At the end of audit analyses, the audit supervisor requests the calculated concentrations from the analyst and compares the results with the actual audit concentrations. If each measured concentration agrees with the respective actual concentration within ±10 percent, he directs the analyst to begin analyzing source samples. Audit supervisor judgment and/or supervisory policy determine action when agreement is not within ±10 percent. When a consistent bias in excess of 10 percent is found, it may be possible to proceed with the sample analysis, with a corrective factor to be applied to the results at a later time. However, every attempt should be made to locate the cause of the discrepancy, as it may be misleading. The audit supervisor records each cylinder number, cylinder pressure (at the end of the audit), and all calculated concentrations. The individual being audited must not under any circumstance be told actual audit concentrations until calculated concentrations have been submitted to the audit supervisor.

Field Audit Report

Part A— To be filled out by organization supplying audit cylinders.

1. Organization supplying audit sample(s) and shipping address:

2. Audit supervisor, organization, and phone number:

3. Shipping instructions: Name, Address, Attention:

4. Guaranteed arrival date for cylinders:

5. Planned shipping date for cylinders:

6. Details on audit cylinders from last analysis:

	Low conc.	**High conc.**
a. Date of last analysis		
b. Cylinder number		
c. Cylinder pressure, psi		
d. Audit gas(es)/balance gas		
e. Audit gas(es), ppm		
f. Cylinder construction		

Part B —To be filled out by audit supervisor.

1. Process sampled:

2. Audit location:

3. Name of individual audit:

4. Audit date:

5. Audit results:

	Low conc. cylinder	**High conc. cylinder**
a. Cylinder number		
b. Cylinder pressure before audit, psi		
c. Cylinder pressure after audit, psi		
d. Measured concentration, ppm Injection #1* Injection #2* Average		
e. Actual audit concentration, ppm (Part A, 6e)		
f. Audit accuracy:[1]		
Low Conc. Cylinder		
High Conc. Cylinder		
Percent [1]accuracy=		
Measured Conc.−Actual Conc.		
_____ ×100		
Actual Conc.		
g. Problems detected (if any)		

[1] Results of two consecutive injections that meet the sample analysis criteria of the test method.

[47 FR 39178, Sept. 7, 1982]

Appendix D to Part 61—Methods for Estimating Radionuclide Emissions

1. Purpose and Background

Facility owners or operators may estimate radionuclide emissions to the atmosphere for dose calculations instead of measuring emissions. Particulate emissions from mill tailings piles should be estimated using the procedures listed in reference re #2. All other emissions may be estimated by using the “Procedures” listed below, or using the method described in reference #1.

2. Procedure

To estimate emissions to the atmosphere:

(a) Determine the amount (in curies) used at facilities for the period under consideration. Radioactive materials in sealed packages that remain unopened, and have not leaked during the assessment period should not be included in the calculation.

(b) Multiply the amount used by the following factors which depend on the physical state of the radionuclide. They are:

(i) 1 for gases;

(ii) 10^{-3} for liquids or particulate solids; and

(iii) 10^{-6} for solids.

If any nuclide is heated to a temperature of 100 degrees Celsius or more, boils at a temperature of 100 degrees Celsius or less, or is intentionally dispersed into the environment, it must be considered to be a gas.

(c) If a control device is installed between the place of use and the point of release, multiply emissions from (b) by an adjustment factor. These are presented in Table 1.

Table 1—Adjustment to Emission Factors for Effluent Controls

Controls	**Types of radionuclides controlled**	**Adjustment factor to emissions**	**Comments and conditions**
HEPA filters	Particulates	0.01	Not applicable to gaseous radionuclides; periodic testing is prudent to ensure high removal efficiency.
Fabric filter	Particulates	0.1	Monitoring would be prudent to guard against tears in filter.
Sintered metal	Particulates	1	Insufficient data to make recommendation.
Activated carbon filters	Iodine gas	0.1	Efficiency is time dependent; monitoring is necessary to ensure effectiveness.
Douglas bags: Held one week or longer for decay	Xenon	0.5/wk	Based on xenon half-life of 5.3 days;
Douglas bags: Released within one week	Xenon	1	Provides no reduction of exposure to general public.
Venturi scrubbers	Particulates Gases	0.05 1	Although venturis may remove gases, variability in gaseous removal efficiency dictates adjustment factor for particulates only.
Packed bed scrubbers	Gases	0.1	Not applicable to particulates.
Electrostatic precipitators	Particulates	0.05	Not applicable for gaseous radionuclides
Xenon traps	Xenon	0.1	Efficiency is time dependent; monitoring is necessary to ensure effectiveness.
Fume hoods	All	1	Provides no reduction to general public exposures.
Vent stacks	All	1	Generally provides no reduction of exposure to general public.

References

(1) Environmental Protection Agency, “A Guide for Determining Compliance with the Clean Air Act Standards for *Radionuclides Emissions from NRC-Licensed and Non-DOE Federal Facilities”, EPA 520/1-89-002, January 1989.*

(2) Nuclear Regulatory Commission, “Methods for Estimating Radioactive and Toxic Airborne Source Terms for Uranium Milling Operations”, U.S. Nuclear Regulatory Commission Regulatory Guide 3.59, March 1987.

[54 FR 51711, Dec. 15, 1989]

Appendix E to Part 61—Compliance Procedures Methods for Determining Compliance With Subpart I

1. Purpose and Background

This Appendix provides simplified procedures to reduce the burden on Nuclear Regulatory Commission (NRC) licensees, and non-Department of Energy Federal facilities in determining compliance with 40 CFR part 61, subpart I. The procedures consist of a series of increasingly more stringent steps, depending on the facility's potential to exceed the standard.

First, a facility can be found in compliance if the quantity of radioactive material possessed during the year is less than that listed in a table of annual possession quantities. A facility will also be in compliance if the average annual radionuclide emission concentration is less than that listed in a table of air concentration levels. If the facility is not in compliance by these tables, it can establish compliance by estimating a dose using screening procedure developed by the National Council on Radiation Protection and Measurements with a radiological source term derived using EPA approved emission factors. These procedures are described in a “Guide for Determining Compliance with the Clean Air Act Standards for Radionuclide Emissions From NRC-Licensed and Non-DOE Federal Facilities.”

A user-friendly computer program called COMPLY has been developed to reduce the burden on the regulated community. The Agency has also prepared a “User's Guide for the COMPLY Code” to assist the regulated community in using the code, and in handling more complex situations such as multiple release points. The basis for these compliance procedures are provided in “Background Information Document: Procedures Approved for Demonstrating Compliance with 40 CFR Part 61, Subpart I”. The compliance model is the highest level in the COMPLY computer code and provides for the most realistic assessment of dose by allowing the use of site-specific information.

2. Table of Annual Possession Quantity

(a) Table 1 may be used for determining if facilities are in compliance with the standard. The possession table can only be used if the following conditions are met:

(i) No person lives within 10 meters of any release point; and

(ii) No milk, meat, or vegetables are produced within 100 meters of any release point.

(b) Procedures described in Reference (1) shall be used to determine compliance or exemption from reporting by use of Table 2.

Table 1—Annual Possession Quantities for Environmental Compliance

[Annual Possession Quantities (Ci/yr)]

Radionuclide	**Gaseous form***	**Liquid/powder forms**	**Solid form***
Ac-225	9.6E−05	9.6E−02	9.6E+01
Ac-227	1.6E−07	1.6E−04	1.6E−01
Ac-228	3.4E−03	3.4E+00	3.4E+03
Ag-106	1.6E+00	1.6E+03	1.6E+06
Ag-106m	2.6E−03	2.6E+00	2.6E+03
Ag-108m	6.5E−06	6.5E−03	6.5E+00
Ag-110m	9.4E−05	9.4E−02	9.4E+01
Ag-111	6.7E−02	6.7E+01	6.7E+04
Al-26	4.0E−06	4.0E−03	4.0E+00
Am-241	2.3E−06	2.3E−03	2.3E+00
Am-242	1.8E−02	1.8E+01	1.8E+04
Am-242m	2.5E−06	2.5E−03	2.5E+00

Radionuclide	Gaseous form*	Liquid/powder forms	Solid form*
Am-243	2.3E−06	2.3E−03	2.3E+00
Am-244	4.6E−02	4.6E+01	4.6E+04
Am-245	7.0E+00	7.0E+03	7.0E+06
Am-246	9.8E−01	9.8E+02	9.8E+05
Ar-37	1.4E+06		
Ar-41	1.4E+00		
As-72	2.9E−02	2.9E+01	2.9E+04
As-73	6.0E−02	6.0E+01	6.0E+04
As-74	4.3E−03	4.3E+00	4.3E+03
As-76	8.8E−02	8.8E+01	8.8E+04
As-77	7.9E−01	7.9E+02	7.9E+05
At-211	1.0E−02	1.0E+01	1.0E+04
Au-193	4.2E−01	4.2E+02	4.2E+05
Au-194	3.5E−02	3.5E+01	3.5E+04
Au-195	3.3E−03	3.3E+00	3.3E+03
Au-198	4.6E−02	4.6E+01	4.6E+04
Au-199	1.5E−01	1.5E+02	1.5E+05
Ba-131	1.0E−02	1.0E+01	1.0E+04
Ba-133	4.9E−05	4.9E−02	4.9E+01
Ba-133m	9.3E−02	9.3E+01	9.3E+04
Ba-135m	5.8E−01	5.8E+02	5.8E+05
Ba-139	4.7E+00	4.7E+03	4.7E+06
Ba-140	2.1E−03	2.1E+00	2.1E+03
Ba-141	1.3E+00	1.3E+03	1.3E+06
Ba-142	1.1E+00	1.1E+03	1.1E+06
Be-7	2.3E−02	2.3E+01	2.3E+04
Be-10	3.0E−03	3.0E+00	3.0E+03
Bi-206	3.1E−03	3.1E+00	3.1E+03
Bi-207	8.4E−06	8.4E−03	8.4E+00
Bi-210	4.2E−03	4.2E+00	4.2E+03
Bi-212	4.7E−02	4.7E+01	4.7E+04
Bi-213	6.0E−02	6.0E+01	6.0E+04
Bi-214	1.4E−01	1.4E+02	1.4E+05
Bk-249	7.0E−04	7.0E−01	7.0E+02
Bk-250	1.0E−01	1.0E+02	1.0E+05
Br-77	7.5E−02	7.5E+01	7.5E+04
Br-80	1.2E+01	1.2E+04	1.2E+07
Br-80m	1.5E+00	1.5E+03	1.5E+06
Br-82	1.6E−02	1.6E+01	1.6E+04
Br-83	9.9E+00	9.9E+03	9.9E+06
Br-84	5.6E−01	5.6E+02	5.6E+05
C-11	1.3E+00	1.3E+03	1.3E+06
C-14	2.9E−01	2.9E+02	2.9E+05
Ca-41	2.7E−02	2.7E+01	2.7E+04

Radionuclide	Gaseous form*	Liquid/powder forms	Solid form*
Ca-45	5.8E−02	5.8E+01	5.8E+04
Ca-47	1.1E−02	1.1E+01	1.1E+04
Cd-109	5.0E−03	5.0E+00	5.0E+03
Cd-113	3.3E−04	3.3E−01	3.3E+02
Cd-113m	4.4E−04	4.4E−01	4.4E+02
Cd-115	5.4E−02	5.4E+01	5.4E+04
Cd-115m	1.0E−02	1.0E+01	1.0E+04
Cd-117	5.6E−02	5.6E+01	5.6E+04
Cd-117m	1.3E−01	1.3E+02	1.3E+05
Ce-139	2.6E−03	2.6E+00	2.6E+03
Ce-141	1.8E−02	1.8E+01	1.8E+04
Ce-143	1.0E−01	1.0E+02	1.0E+05
Ce-144	1.7E−03	1.7E+00	1.7E+03
Cf-248	2.0E−05	2.0E−02	2.0E+01
Cf-249	1.7E−06	1.7E−03	1.7E+00
Cf-250	4.0E−06	4.0E−03	4.0E+00
Cf-251	1.7E−06	1.7E−03	1.7E+00
Cf-252	6.4E−06	6.4E−03	6.4E+00
Cf-253	3.3E−04	3.3E−01	3.3E+02
Cf-254	3.6E−06	3.6E−03	3.6E+00
Cl-36	1.9E−04	1.9E−01	1.9E+02
Cl-38	6.5E−01	6.5E+02	6.5E+05
Cm-242	6.0E−05	6.0E−02	6.0E+01
Cm-243	3.3E−06	3.3E−03	3.3E+00
Cm-244	4.2E−06	4.2E−03	4.2E+00
Cm-245	2.3E−06	2.3E−03	2.3E+00
Cm-246	2.3E−06	2.3E−03	2.3E+00
Cm-247	2.3E−06	2.3E−03	2.3E+00
Cm-248	6.4E−07	6.4E−04	6.4E−01
Cm-249	4.6E+00	4.6E+03	4.6E+06
Cm-250	1.1E−07	1.1E−04	1.1E−01
Co-56	2.4E−04	2.4E−01	2.4E+02
Co-57	1.6E−03	1.6E+00	1.6E+03
Co-58	9.0E−04	9.0E−01	9.0E+02
Co-58m	1.7E−01	1.7E+02	1.7E+05
Co-60	1.6E−05	1.6E−02	1.6E+01
Co-60m	4.0E+00	4.0E+03	4.0E+06
Co-61	3.8E+00	3.8E+03	3.8E+06
Cr-49	9.0E−01	9.0E+02	9.0E+05
Cr-51	6.3E−02	6.3E+01	6.3E+04
Cs-129	1.5E−01	1.5E+02	1.5E+05
Cs-131	2.8E−01	2.8E+02	2.8E+05
Cs-132	1.3E−02	1.3E+01	1.3E+04
Cs-134	5.2E−05	5.2E−02	5.2E+01

Radionuclide	Gaseous form*	Liquid/powder forms	Solid form*
Cs-134m	3.2E−01	3.2E+02	3.2E+05
Cs-135	2.4E−02	2.4E+01	2.4E+04
Cs-136	2.1E−03	2.1E+00	2.1E+03
Cs-137	2.3E−05	2.3E−02	2.3E+01
Cs-138	4.4E−01	4.4E+02	4.4E+05
Cu-61	4.0E−01	4.0E+02	4.0E+05
Cu-64	5.2E−01	5.2E+02	5.2E+05
Cu-67	1.5E−01	1.5E+02	1.5E+05
Dy-157	4.4E−01	4.4E+02	4.4E+05
Dy-165	5.6E+00	5.6E+03	5.6E+06
Dy-166	8.1E−02	8.1E+01	8.1E+04
Er-169	4.0E−01	4.0E+02	4.0E+05
Er-171	3.6E−01	3.6E+02	3.6E+05
Es-253	2.6E−04	2.6E−01	2.6E+02
Es-254	2.3E−05	2.3E−02	2.3E+01
Es-254m	1.8E−03	1.8E+00	1.8E+03
Eu-152	1.6E−05	1.6E−02	1.6E+01
Eu-152m	3.5E−01	3.5E+02	3.5E+05
Eu-154	2.0E−05	2.0E−02	2.0E+01
Eu-155	5.2E−04	5.2E−01	5.2E+02
Eu-156	3.2E−03	3.2E+00	3.2E+03
F-18	5.6E−01	5.6E+02	5.6E+05
Fe-52	4.9E−02	4.9E+01	4.9E+04
Fe-55	1.4E−01	1.4E+02	1.4E+05
Fe-59	1.3E−03	1.3E+00	1.3E+03
Fm-254	1.8E−02	1.8E+01	1.8E+04
Fm-255	4.0E−03	4.0E+00	4.0E+03
Fr-223	1.4E−01	1.4E+02	1.4E+05
Ga-66	5.6E−02	5.6E+01	5.6E+04
Ga-67	1.1E−01	1.1E+02	1.1E+05
Ga-68	7.6E−01	7.6E+02	7.6E+05
Ga-72	3.6E−02	3.6E+01	3.6E+04
Gd-152	4.4E−06	4.4E−03	4.4E+00
Gd-153	2.0E−03	2.0E+00	2.0E+03
Gd-159	6.8E−01	6.8E+02	6.8E+05
Ge-68	2.3E−04	2.3E−01	2.3E+02
Ge-71	2.6E+00	2.6E+03	2.6E+06
Ge-77	1.0E−01	1.0E+02	1.0E+05
H-3	1.5E+01	1.5E+04	1.5E+07
Hf-181	2.5E−03	2.5E+00	2.5E+03
Hg-193m	9.5E−02	9.5E+01	9.5E+04
Hg-197	2.4E−01	2.4E+02	2.4E+05
Hg-197m	2.5E−01	2.5E+02	2.5E+05
Hg-203	5.2E−03	5.2E+00	5.2E+03

Radionuclide	Gaseous form*	Liquid/powder forms	Solid form*
Ho-166	2.8E−01	2.8E+02	2.8E+05
Ho-166m	6.0E−06	6.0E−03	6.0E+00
I-123	4.9E−01	4.9E+02	4.9E+05
I-124	9.3E−03	9.3E+00	9.3E+03
I-125	6.2E−03	6.2E+00	6.2E+03
I-126	3.7E−03	3.7E+00	3.7E+03
I-128	9.3E+00	9.3E+03	9.3E+06
I-129	2.6E−04	2.6E−01	2.6E+02
I-130	4.6E−02	4.6E+01	4.6E+04
I-131	6.7E−03	6.7E+00	6.7E+03
I-132	2.0E−01	2.0E+02	2.0E+05
I-133	6.7E−02	6.7E+01	6.7E+04
I-134	3.2E−01	3.2E+02	3.2E+05
I-135	1.2E−01	1.2E+02	1.2E+05
In-111	4.9E−02	4.9E+01	4.9E+04
In-113m	2.1E+00	2.1E+03	2.1E+06
In-114m	4.9E−03	4.9E+00	4.9E+03
In-115	2.7E−04	2.7E−01	2.7E+02
In-115m	1.4E+00	1.4E+03	1.4E+06
In-116m	3.5E−01	3.5E+02	3.5E+05
In-117	1.3E+00	1.3E+03	1.3E+06
In-117m	7.6E−02	7.6E+01	7.6E+04
Ir-190	3.5E−03	3.5E+00	3.5E+03
Ir-192	9.7E−04	9.7E−01	9.7E+02
Ir-194	2.5E−01	2.5E+02	2.5E+05
Ir-194m	1.5E−04	1.5E−01	1.5E+02
K-40	6.8E−05	6.8E−02	6.8E+01
K-42	2.9E−01	2.9E+02	2.9E+05
K-43	6.0E−02	6.0E+01	6.0E+04
K-44	4.9E−01	4.9E+02	4.9E+05
Kr-79	7.0E+00		
Kr-81	1.8E+02		
Kr-83m	2.0E+04		
Kr-85	8.4E+02		
Kr-85m	1.1E+01		
Kr-87	2.0E+00		
Kr-88	4.2E−01		
La-140	1.6E−02	1.6E+01	1.6E+04
La-141	1.1E+00	1.1E+03	1.1E+06
La-142	2.3E−01	2.3E+02	2.3E+05
Lu-177	1.4E−01	1.4E+02	1.4E+05
Lu-177m	3.5E−04	3.5E−01	3.5E+02
Mg-28	2.1E−02	2.1E+01	2.1E+04
Mn-52	3.5E−03	3.5E+00	3.5E+03

Radionuclide	Gaseous form*	Liquid/powder forms	Solid form*
Mn-52m	5.2E−01	5.2E+02	5.2E+05
Mn-53	5.7E−02	5.7E+01	5.7E+04
Mn-54	2.5E−04	2.5E−01	2.5E+02
Mn-56	2.5E−01	2.5E+02	2.5E+05
Mo-93	1.5E−03	1.5E+00	1.5E+03
Mo-99**	5.7E−02	5.7E+01	5.7E+04
Mo-101	8.4E−01	8.4E+02	8.4E+05
Na-22	3.2E−05	3.2E−02	3.2E+01
Na-24	2.6E−02	2.6E+01	2.6E+04
Nb-90	2.5E−02	2.5E+01	2.5E+04
Nb-93m	1.2E−02	1.2E+01	1.2E+04
Nb-94	6.0E−06	6.0E−03	6.0E+00
Nb-95	2.3E−03	2.3E+00	2.3E+03
Nb-95m	2.0E−02	2.0E+01	2.0E+04
Nb-96	2.5E−02	2.5E+01	2.5E+04
Nb-97	1.0E+00	1.0E+03	1.0E+06
Nd-147	3.0E−02	3.0E+01	3.0E+04
Nd-149	1.1E+00	1.1E+03	1.1E+06
Ni-56	2.0E−03	2.0E+00	2.0E+03
Ni-57	2.1E−02	2.1E+01	2.1E+04
Ni-59	2.2E−02	2.2E+01	2.2E+04
Ni-63	1.4E−01	1.4E+02	1.4E+05
Ni-65	7.0E−01	7.0E+02	7.0E+05
Np-235	3.0E−02	3.0E+01	3.0E+04
Np-237	1.8E−06	1.8E−03	1.8E+00
Np-238	1.9E−02	1.9E+01	1.9E+04
Np-239	1.0E−01	1.0E+02	1.0E+05
Np-240	6.5E−01	6.5E+02	6.5E+05
Np-240m	4.7E+00	4.7E+03	4.7E+06
Os-185	9.2E−04	9.2E−01	9.2E+02
Os-191m	9.0E−01	9.0E+02	9.0E+05
Os-191	3.8E−02	3.8E+01	3.8E+04
Os-193	2.9E−01	2.9E+02	2.9E+05
P-32	1.7E−02	1.7E+01	1.7E+04
P-33	1.2E−01	1.2E+02	1.2E+05
Pa-230	6.3E−04	6.3E−01	6.3E+02
Pa-231	8.3E−07	8.3E−04	8.3E−01
Pa-233	9.3E−03	9.3E+00	9.3E+03
Pa-234	9.3E−02	9.3E+01	9.3E+04
Pb-203	8.3E−02	8.3E+01	8.3E+04
Pb-205	1.2E−02	1.2E+01	1.2E+04
Pb-209	1.1E+01	1.1E+04	1.1E+07
Pb-210	5.5E−05	5.5E−02	5.5E+01
Pb-211	1.2E−01	1.2E+02	1.2E+05

Radionuclide	Gaseous form*	Liquid/powder forms	Solid form*
Pb-212	6.0E−03	6.0E+00	6.0E+03
Pb-214	1.2E−01	1.2E+02	1.2E+05
Pd-103	2.1E−01	2.1E+02	2.1E+05
Pd-107	8.2E−02	8.2E+01	8.2E+04
Pd-109	9.4E−01	9.4E+02	9.4E+05
Pm-143	7.6E−04	7.6E−01	7.6E+02
Pm-144	1.1E−04	1.1E−01	1.1E+02
Pm-145	5.2E−04	5.2E−01	5.2E+02
Pm-146	4.4E−05	4.4E−02	4.4E+01
Pm-147	2.6E−02	2.6E+01	2.6E+04
Pm-148	1.7E−02	1.7E+01	1.7E+04
Pm-148m	7.6E−04	7.6E−01	7.6E+02
Pm-149	2.8E−01	2.8E+02	2.8E+05
Pm-151	1.2E−01	1.2E+02	1.2E+05
Po-210	9.3E−05	9.3E−02	9.3E+01
Pr-142	2.8E−01	2.8E+02	2.8E+05
Pr-143	1.0E−01	1.0E+02	1.0E+05
Pr-144	1.5E+01	1.5E+04	1.5E+07
Pt-191	6.4E−02	6.4E+01	6.4E+04
Pt-193	2.1E−02	2.1E+01	2.1E+04
Pt-193m	4.8E−01	4.8E+02	4.8E+05
Pt-195m	1.4E−01	1.4E+02	1.4E+05
Pt-197	1.1E+00	1.1E+03	1.1E+06
Pt-197m	3.6E+00	3.6E+03	3.6E+06
Pu-236	7.0E−06	7.0E−03	7.0E+00
Pu-237	2.3E−02	2.3E+01	2.3E+04
Pu-238	2.7E−06	2.7E−03	2.7E+00
Pu-239	2.5E−06	2.5E−03	2.5E+00
Pu-240	2.5E−06	2.5E−03	2.5E+00
Pu-241	1.3E−04	1.3E−01	1.3E+02
Pu-242	2.5E−06	2.5E−03	2.5E+00
Pu-243	3.8E+00	3.8E+03	3.8E+06
Pu-244	2.4E−06	2.4E−03	2.4E+00
Pu-245	2.1E−01	2.1E+02	2.1E+05
Pu-246	4.8E−03	4.8E+00	4.8E+03
Ra-223	1.3E−04	1.3E−01	1.3E+02
Ra-224	3.2E−04	3.2E−01	3.2E+02
Ra-225	1.3E−04	1.3E−01	1.3E+02
Ra-226	5.5E−06	5.5E−03	5.5E+00
Ra-228	1.3E−05	1.3E−02	1.3E+01
Rb-81	4.2E−01	4.2E+02	4.2E+05
Rb-83	1.4E−03	1.4E+00	1.4E+03
Rb-84	2.0E−03	2.0E+00	2.0E+03
Rb-86	1.7E−02	1.7E+01	1.7E+04

Radionuclide	Gaseous form*	Liquid/powder forms	Solid form*
Rb-87	1.0E−02	1.0E+01	1.0E+04
Rb-88	1.7E+00	1.7E+03	1.7E+06
Rb-89	6.4E−01	6.4E+02	6.4E+05
Re−184	1.8E−03	1.8E+00	1.8E+03
Re-184m	3.6E−04	3.6E−01	3.6E+02
Re-186	1.9E−01	1.9E+02	1.9E+05
Re-187	9.3E+00	9.3E+03	9.3E+06
Re-188	3.7E−01	3.7E+02	3.7E+05
Rh-103m	1.7E+02	1.7E+05	1.7E+08
Rh-105	3.4E−01	3.4E+02	3.4E+05
Ru-97	8.3E−02	8.3E+01	8.3E+04
Ru-103	3.1E−03	3.1E+00	3.1E+03
Ru-105	2.9E−01	2.9E+02	2.9E+05
Ru-106	5.9E−04	5.9E−01	5.9E+02
S-35	7.5E−02	7.5E+01	7.5E+04
Sb-117	2.0E+00	2.0E+03	2.0E+06
Sb-122	3.9E−02	3.9E+01	3.9E+04
Sb-124	6.0E−04	6.0E−01	6.0E+02
Sb-125	1.4E−04	1.4E−01	1.4E+02
Sb-126	1.8E−03	1.8E+00	1.8E+03
Sb-126m	7.6E−01	7.6E+02	7.6E+05
Sb-127	2.0E−02	2.0E+01	2.0E+04
Sb-129	1.8E−01	1.8E+02	1.8E+05
Sc-44	1.4E−01	1.4E+02	1.4E+05
Sc-46	4.0E−04	4.0E−01	4.0E+02
Sc-47	1.1E−01	1.1E+02	1.1E+05
Sc-48	1.1E−02	1.1E+01	1.1E+04
Sc-49	1.0E+01	1.0E+04	1.0E+07
Se-73	1.6E−01	1.6E+02	1.6E+05
Se-75	1.1E−03	1.1E+00	1.1E+03
Se-79	6.9E−03	6.9E+00	6.9E+03
Si-31	4.7E+00	4.7E+03	4.7E+06
Si-32	7.2E−04	7.2E−01	7.2E+02
Sm-147	1.4E−05	1.4E−02	1.4E+01
Sm-151	3.5E−02	3.5E+01	3.5E+04
Sm-153	2.4E−01	2.4E+02	2.4E+05
Sn-113	1.9E−03	1.9E+00	1.9E+03
Sn-117m	2.3E−02	2.3E+01	2.3E+04
Sn-119m	2.8E−02	2.8E+01	2.8E+04
Sn-123	1.8E−02	1.8E+01	1.8E+04
Sn-125	7.2E−03	7.2E+00	7.2E+03
Sn-126	4.7E−06	4.7E−03	4.7E+00
Sr-82	1.9E−03	1.9E+00	1.9E+03
Sr-85	1.9E−03	1.9E+00	1.9E+03

Radionuclide	Gaseous form*	Liquid/powder forms	Solid form*
Sr-85m	1.5E+00	1.5E+03	1.5E+06
Sr-87m	1.2E+00	1.2E+03	1.2E+06
Sr-89	2.1E−02	2.1E+01	2.1E+04
Sr-90	5.2E−04	5.2E−01	5.2E+02
Sr-91	1.2E−01	1.2E+02	1.2E+05
Sr-92	2.5E−01	2.5E+02	2.5E+05
Ta-182	4.4E−04	4.4E−01	4.4E+02
Tb-157	2.2E−03	2.2E+00	2.2E+03
Tb-160	8.4E−04	8.4E−01	8.4E+02
Tc-95	9.0E−02	9.0E+01	9.0E+04
Tc-95m	1.4E−03	1.4E+00	1.4E+03
Tc-96	5.6E−03	5.6E+00	5.6E+03
Tc-96m	7.0E−01	7.0E+02	7.0E+05
Tc-97	1.5E−03	1.5E+00	1.5E+03
Tc-97m	7.2E−02	7.2E+01	7.2E+04
Tc-98	6.4E−06	6.4E−03	6.4E+00
Tc-99	9.0E−03	9.0E+00	9.0E+03
Tc-99m	1.4E+00	1.4E+03	1.4E+06
Tc-101	3.8E+00	3.8E+03	3.8E+06
Te-121	6.0E−03	6.0E+00	6.0E+03
Te-121m	5.3E−04	5.3E−01	5.3E+02
Te-123	1.2E−03	1.2E+00	1.2E+03
Te-123m	2.7E−03	2.7E+00	2.7E+03
Te-125m	1.5E−02	1.5E+01	1.5E+04
Te-127	2.9E+00	2.9E+03	2.9E+06
Te-127m	7.3E−03	7.3E+00	7.3E+03
Te-129	6.5E+00	6.5E+03	6.5E+06
Te-129m	6.1E−03	6.1E+00	6.1E+03
Te-131	9.4E−01	9.4E+02	9.4E+05
Te-131m	1.8E−02	1.8E+01	1.8E+04
Te-132	6.2E−03	6.2E+00	6.2E+03
Te-133	1.2E+00	1.2E+03	1.2E+06
Te-133m	2.9E−01	2.9E+02	2.9E+05
Te-134	4.4E−01	4.4E+02	4.4E+05
Th-226	3.0E−02	3.0E+01	3.0E+04
Th-227	6.4E−05	6.4E−02	6.4E+01
Th-228	2.9E−06	2.9E−03	2.9E+00
Th-229	4.9E−07	4.9E−04	4.9E−01
Th-230	3.2E−06	3.2E−03	3.2E+00
Th-231	8.4E−01	8.4E+02	8.4E+05
Th-232	6.0E−07	6.0E−04	6.0E−01
Th-234	2.0E−02	2.0E+01	2.0E+04
Ti-44	5.2E−06	5.2E−03	5.2E+00
Ti-45	4.0E−01	4.0E+02	4.0E+05

Radionuclide	Gaseous form*	Liquid/powder forms	Solid form*
Tl-200	4.4E−02	4.4E+01	4.4E+04
Tl-201	1.8E−01	1.8E+02	1.8E+05
Tl-202	1.0E−02	1.0E+01	1.0E+04
Tl-204	2.5E−02	2.5E+01	2.5E+04
Tm-170	2.4E−02	2.4E+01	2.4E+04
Tm-171	5.9E−02	5.9E+01	5.9E+04
U-230	5.0E−05	5.0E−02	5.0E+01
U-231	1.4E−01	1.4E+02	1.4E+05
U-232	1.3E−06	1.3E−03	1.3E+00
U-233	7.6E−06	7.6E−03	7.6E+00
U-234	7.6E−06	7.6E−03	7.6E+00
U-235	7.0E−06	7.0E−03	7.0E+00
U-236	8.4E−06	8.4E−03	8.4E+00
U-237	4.7E−02	4.7E+01	4.7E+04
U-238	8.6E−06	8.6E−03	8.6E+00
U-239	8.3E+00	8.3E+03	8.3E+06
U-240	1.8E−01	1.8E+02	1.8E+05
V-48	1.4E−03	1.4E+00	1.4E+03
V-49	1.3E+00	1.3E+03	1.3E+06
W-181	1.1E−02	1.1E+01	1.1E+04
W-185	1.6E−01	1.6E+02	1.6E+05
W-187	1.1E−01	1.1E+02	1.1E+05
W-188	1.0E−02	1.0E+01	1.0E+04
Xe-122	7.6E−02	7.6E+01	7.6E+04
Xe-123	1.6E+00	1.6E+03	1.6E+06
Xe-125	6.0E−01		
Xe-127	7.0E+00		
Xe-129m	7.6E+01		
Xe-131m	2.2E+02		
Xe-133	5.2E+01		
Xe-133m	6.0E+01		
Xe-135	7.6E+00		
Xe-135m	4.2E+00		
Xe-138	9.9E−01		
Y-86	2.8E−02	2.8E+01	2.8E+04
Y-87	2.3E−02	2.3E+01	2.3E+04
Y-88	2.5E−04	2.5E−01	2.5E+02
Y-90	1.1E−01	1.1E+02	1.1E+05
Y-90m	4.3E−01	4.3E+02	4.3E+05
Y-91	1.8E−02	1.8E+01	1.8E+04
Y-91m	1.6E+00	1.6E+03	1.6E+06
Y-92	7.0E−01	7.0E+02	7.0E+05
Y-93	3.8E−01	3.8E+02	3.8E+05
Yb-169	5.5E−03	5.5E+00	5.5E+03

Radionuclide	Gaseous form*	Liquid/powder forms	Solid form*
Yb-175	2.1E−01	2.1E+02	2.1E+05
Zn-62	8.6E−02	8.6E+01	8.6E+04
Zn-65	4.4E−04	4.4E−01	4.4E+02
Zn-69	2.7E+01	2.7E+04	2.7E+07
Zn-69m	2.0E−01	2.0E+02	2.0E+05
Zr-86	2.4E−02	2.4E+01	2.4E+04
Zr-88	2.7E−04	2.7E−01	2.7E+02
Zr-89	1.6E−02	1.6E+01	1.6E+04
Zr-93	2.8E−03	2.8E+00	2.8E+03
Zr-95	6.4E−04	6.4E−01	6.4E+02
Zr-97	4.6E−02	4.6E+01	4.6E+04

*Radionuclides boiling at 100 °C or less, or exposed to a temperature of 100 °C, must be considered a gas. Capsules containing radionuclides in liquid or powder form can be considered to be solids.

**Mo-99 contained in a generator to produce Technetium-99 can be assumed to be a solid.

3. Table of Concentration Levels

(a) Table 2 may be used for determining if facilities are in compliance with the standard.

1. The concentration table as applied to emission estimates can only be used if all releases are from point sources and concentrations have been measured at the stack or vent using EPA-approved methods, and the distance between each stack or vent and the nearest resident is greater than 3 times the diameter of the stack or vent. Procedures provided in Ref. (1) shall be used to determine compliance or exemption from reporting by use of Table 2.

2. The concentration table may be used to determine compliance with the standard based on environmental measurements provided these measurements are made in conformance with the requirements of § 61.107(b)(5).

4. NCRP Screening Model

The procedures described in Reference (4) may be used to determine doses to members of the general public from emissions of radionuclides to the atmosphere. Both the total dose from all radionuclides emitted, and the dose caused by radioactive iodine must be considered in accordance with the procedures in Ref. (1).

5. The COMPLY Computer Code

The COMPLY computer code may be used to determine compliance with subpart I. The compliance model in the COMPLY computer code may be used to determine the dose to members of the general public from emissions of radionuclides to the atmosphere. The EPA may add radionuclides to all or any part of COMPLY to cover radionuclides that may be used by the regulated community.

Table 2—Concentration Levels for Environmental Compliance

Radionuclide	Concentration (Ci/m^3)	Radionuclide	Concentration (Ci/m^3)
Ac-225	9.1E−14	Bi-207	1.0E−14
Ac-227	1.6E−16	Bi-210	2.9E−13
Ac-228	3.7E−12	Bi-212	5.6E−11
Ag-106	1.9E−09	Bi-213	7.1E−11

Radionuclide	Concentration (Ci/m^3)	Radionuclide	Concentration (Ci/m^3)
Ag-106m	1.2E−12	Bi-214	1.4E−10
Ag-108m	7.1E−15	Bk-249	5.6E−13
Ag-110m	9.1E−14	Bk-250	9.1E−11
Ag-111	2.5E−12	Br-77	4.2E−11
Al-26	4.8E−15	Br-80	1.4E−08
Am-241	1.9E−15	Br-80m	1.8E−09
Am-242	1.5E−11	Br-82	1.2E−11
Am-242m	2.0E−15	Br-83	1.2E−08
Am-243	1.8E−15	Br-84	6.7E−10
Am-244	4.0E−11	C-11	1.5E−09
Am-245	8.3E−09	C-14	1.0E−11
Am-246	1.2E−09	Ca-41	4.2E−13
Ar-37	1.6E−03	Ca-45	1.3E−12
Ar-41	1.7E−09	Ca-47	2.4E−12
As-72	2.4E−11	Cd-109	5.9E−13
As-73	1.1E−11	Cd-113	9.1E−15
As-74	2.2E−12	Cd-113m	1.7E−14
As-76	5.0E−11	Cd-115	1.6E−11
As-77	1.6E−10	Cd-115m	8.3E−13
At-211	1.1E−11	Cd-117	6.7E−11
Au-193	3.8E−10	Cd-117m	1.6E−10
Au-194	3.2E−11	Ce-139	2.6E−12
Au-195	3.1E−12	Ce-141	6.3E−12
Au-198	2.1E−11	Ce-143	3.0E−11
Au-199	4.8E−11	Ce-144	6.2E−13
Ba-131	7.1E−12	Cf-248	1.8E−14
Ba-133	5.9E−14	Cf-249	1.4E−15
Ba-133m	5.9E−11	Cf-250	3.2E−15
Ba-135m	1.8E−10	Cf-251	1.4E−15
Ba-139	5.6E−09	Cf-252	5.6E−15
Ba-140	1.3E−12	Cf-253	3.1E−13
Ba-141	1.4E−09	Cf-254	3.0E−15
Ba-142	1.3E−09	Cl-36	2.7E−15
Be-7	2.3E−11	Cl-38	7.7E−10
Be-10	1.6E−12	Cm-242	5.3E−14
Bi-206	2.3E−12	Cm-243	2.6E−15
Cm-244	3.3E−15	Eu-156	1.9E−12
Cm-245	1.8E−15	F-18	6.7E−10
Cm-246	1.9E−15	Fe-52	5.6E−11
Cm-247	1.9E−15	Fe-55	9.1E−12
Cm-248	5.0E−16	Fe-59	6.7E−13
Cm-249	3.7E−09	Fm-254	2.0E−11
Cm-250	9.1E−17	Fm-255	4.3E−12
Co-56	1.8E−13	Fr-223	3.3E−11

Radionuclide	Concentration (Ci/m^3)	Radionuclide	Concentration (Ci/m^3)
Co-57	1.3E−12	Ga-66	6.2E−11
Co-58	6.7E−13	Ga-67	7.1E−11
Co-58m	1.2E−10	Ga-68	9.1E−10
Co-60	1.7E−14	Ga-72	3.8E−11
Co-60m	.4.3E−09	Gd-152	5.0E−15
Co-61	4.5E−09	Gd-153	2.1E−12
Cr-49	1.1E−09	Gd-159	2.9E−10
Cr-51	3.1E−11	Ge-68	2.0E−13
Cs-129	1.4E−10	Ge-71	2.4E−10
Cs-131	3.3E−11	Ge-77	1.0E−10
Cs-132	4.8E−12	H-3	1.5E−09
Cs-134	2.7E−14	Hf-181	1.9E−12
Cs-134m	1.7E−10	Hg-193m	1.0E−10
Cs-135	4.0E−13	Hg-197	8.3E−11
Cs-136	5.3E−13	Hg-197m	1.1E−10
Cs-137	1.9E−14	Hg-203	1.0E−12
Cs-138	5.3E−10	Ho-166	7.1E−11
Cu-61	4.8E−10	Ho-166m	7.1E−15
Cu-64	5.3E−10	I-123	4.3E−10
Cu-67	5.0E−11	I-124	6.2E−13
Dy-157	5.0E−10	I-125	1.2E−13
Dy-165	6.7E−09	I-126	1.1E−13
Dy-166	1.1E−11	I-128	1.1E−08
Er-169	2.9E−11	I-129	9.1E−15
Er-171	4.0E−10	I-130	4.5E−11
Es-253	2.4E−13	I-131	2.1E−13
Es-254	2.0E−14	I-132	2.3E−10
Es-254m	1.8E−12	I-133	2.0E−11
Eu-152	2.0E−14	I-134	3.8E−10
Eu-152m	3.6E−10	I-135	1.2E−10
Eu-154	2.3E−14	In-111	3.6E−11
Eu-155	5.9E−13	In-113m	2.5E−09
In-114m	9.1E−13	Nb-95	2.2E−12
In-115	7.1E−14	Nb-95m	1.4E−11
In-115m	1.6E−09	Nb-96	2.4E−11
In-116m	4.2E−10	Nb-97	1.2E−09
In-117	1.6E−09	Nd-147	7.7E−12
In-117m	9.1E−11	Nd-149	7.1E−10
Ir-190	2.6E−12	Ni-56	1.7E−12
Ir-192	9.1E−13	Ni-57	1.8E−11
Ir-194	1.1E−10	Ni-59	1.5E−11
Ir-194m	1.7E−13	Ni-63	1.4E−11
K-40	2.7E−14	Ni-65	8.3E−10
K-42	2.6E−10	Np-235	2.5E−11

Radionuclide	Concentration (Ci/m^3)	Radionuclide	Concentration (Ci/m^3)
K-43	6.2E−11	Np-237	1.2E−15
K-44	5.9E−10	Np-238	1.4E−11
Kr-79	8.3E−09	Np-239	3.8E−11
Kr-81	2.1E−07	Np-240	7.7E−10
Kr-83m	2.3E−05	Np-240m	5.6E−09
Kr-85	1.0E−06	Os-185	1.0E−12
Kr-85m	1.3E−08	Os-191m	2.9E−10
Kr-87	2.4E−09	Os-191	1.1E−11
Kr-88	5.0E−10	Os-193	9.1E−11
La-140	1.2E−11	P-32	3.3E−13
La-141	7.7E−10	P-33	2.4E−12
La-142	2.7E−10	Pa-230	3.2E−13
Lu-177	2.4E−11	Pa-231	5.9E−16
Lu-177m	3.6E−13	Pa-233	4.8E−12
Mg-28	1.5E−11	Pa-234	1.1E−10
Mn-52	2.8E−12	Pb-203	6.2E−11
Mn-52m	6.2E−10	Pb-205	5.6E−12
Mn-53	1.5E−11	Pb-209	1.3E−08
Mn-54	2.8E−13	Pb-2I0	2.8E−15
Mn-56	2.9E−10	Pb-211	1.4E−10
Mo-93	1.1E−12	Pb-212	6.3E−12
Mo-99	1.4E−11	Pb-214	1.2E−10
Mo-101	1.0E−09	Pd-103	3.8E−11
Na-22	2.6E−14	Pd-107	3.1E−11
Na-24	2.6E−11	Pd-109	4.8E−10
Nb-90	2.6E−11	Pm-143	9.1E−13
Nb-93m	1.0E−11	Pm-144	1.3E−13
Nb-94	7.1E−15	Pm-145	6.2E−13
Pm-146	5.3E−14	Re-184m	3.7E−13
Pm-147	1.1E−11	Re-186	1.8E−11
Pm-148	5.0E−12	Re-187	2.6E−10
Pm-148m	6.7E−13	Re-188	1.7E−10
Pm-149	4.2E−11	Rh-103m	2.1E−07
Pm-151	7.1E−11	Rh-105	1.3E−10
Po-210	7.1E−15	Ru-97	6.7E−11
Pr-142	1.1E−10	Ru-103	2.6E−12
Pr-143	7.1E−12	Ru-105	2.8E−10
Pr-144	1.8E−08	Ru-106	3.4E−13
Pt-191	4.3E−11	S-35	1.3E−12
Pt-193	1.8E−11	Sb-117	2.4E−09
Pt-193m	4.8E−11	Sb-122	1.4E−11
Pt-195m	3.2E−11	Sb-124	5.3E−13
Pt-197	4.0E−10	Sb-125	1.6E−13
Pt-197m	2.6E−09	Sb-126	1.4E−12

Radionuclide	Concentration (Ci/m^3)	Radionuclide	Concentration (Ci/m^3)
Pu-236	5.9E−15	Sb-126m	9.1E−10
Pu-237	1.9E−11	Sb-127	7.1E−12
Pu-238	2.1E−15	Sb-129	7.7E−11
Pu-239	2.0E−15	Sc-44	1.7E−10
Pu-240	2.0E−15	Sc-46	4.2E−13
Pu-241	1.0E−13	Sc-47	3.8E−11
Pu-242	2.0E−15	Sc-48	9.1E−12
Pu-243	4.2E−09	Sc-49	1.2E−08
Pu-244	2.0E−15	Se-73	1.7E−10
Pu-245	2.1E−10	Se-75	1.7E−13
Pu-246	2.2E−12	Se-79	1.1E−13
Ra-223	4.2E−14	Si-31	5.6E−09
Ra-224	1.5E−13	Si-32	3.4E−14
Ra-225	5.0E−14	Sm-147	1.4E−14
Ra-226	3.3E−15	Sm-151	2.1E−11
Ra-228	5.9E−15	Sm-153	5.9E−11
Rb-81	5.0E−10	Sn-113	1.4E−12
Rb-83	3.4E−13	Sn-117m	5.6E−12
Rb-84	3.6E−13	Sn-119m	5.3E−12
Rb-86	5.6E−13	Sn-123	1.1E−12
Rb-87	1.6E−13	Sn-125	1.7E−12
Rb-88	2.1E−09	Sn-126	5.3E−15
Rb-89	7.1E−10	Sr-82	6.2E−13
Re-184	1.5E−12	Sr-85	1.8E−12
Sr-85m	1.6E−09	Th-232	6.2E−16
Sr-87m	1.4E−09	Th-234	2.2E−12
Sr-89	1.8E−12	Ti-44	6.2E−15
Sr-90	1.9E−14	Ti-45	4.8E−10
Sr-91	9.1E−11	Tl-200	4.5E−11
Sr-92	2.9E−10	Tl-201	1.0E−10
Ta-182	4.5E−13	Tl-202	5.0E−12
Tb-157	2.5E−12	Tl-204	1.2E−12
Tb-160	7.7E−13	Tm-170	3.3E−12
Tc-95	1.0E−10	Tm-171	2.6E−11
Tc-95m	1.4E−12	U-230	1.5E−14
Tc-96	5.6E−12	U-231	4.2E−11
Tc-96m	6.7E−10	U-232	1.3E−15
Tc-97	.7.1E−13	U-233	7.1E−15
Tc-97m	7.1E−12	U-234	7.7E−15
Tc-98	6.7E−15	U-235	7.1E−15
Tc-99	1.4E−13	U-236	7.7E−15
Tc-99m	1.7E−09	U-237	1.0E−11
Tc-101	4.5E−09	U-238	8.3E−15
Te-121	1.0E−12	U-239	4.3E−09

Radionuclide	Concentration (Ci/m^3)	Radionuclide	Concentration (Ci/m^3)
Te-121m	1.2E−13	U-240	1.3E−10
Te-123	1.4E−13	V-48	1.0E−12
Te-123m	2.0E−13	V-49	1.6E−10
Te-125m	3.6E−13	W-181	6.7E−12
Te-127	1.0E−09	W-185	2.6E−12
Te-127m	1.5E−13	W-187	7.7E−11
Te-129	7.7E−09	W-188	5.3E−13
Te-129m	1.4E−13	Xe-122	9.1E−11
Te-131	9.1E−11	Xe-123	1.6E−09
Te-131m	1.0E−12	Xe-125	1.1E−11
Te-132	7.1E−13	Xe-127	8.3E−09
Te-133	9.1E−10	Xe-129m	9.1E−08
Te-133m	2.2E−10	Xe-131m	2.6E−07
Te-134	5.3E−10	Xe-133	6.2E−08
Th-226	3.4E−11	Xe-133m	7.1E−08
Th-227	3.8E−14	Xe-135	9.1E−09
Th-228	3.1E−15	Xe-135m	5.0E−09
Th-229	5.3E−16	Xe-138	1.2E−09
Th-230	3.4E−15	Y-86	3.0E−11
Th-231	2.9E−10	Y-87	1.7E−11
Y-88	2.7E−13	Zn-65	9.1E−14
Y-90	1.3E−11	Zn-69	3.2E−08
Y-90m	1.9E−10	Zn-69m	1.7E−10
Y-91	2.1E−12	Zr-86	2.4E−11
Y-91m	1.3E−09	Zr-88	3.1E−13
Y-92	8.3E−10	Zr-89	1.3E−11
Y-93	2.9E−10	Zr-93	2.6E−12
Yb-169	3.7E−12	Zr-95	6.7E−13
Yb-175	4.3E−11	Zr-97	3.8E−11
Zn-62	9.1E−11		

6. References

(1) Environmental Protection Agency, “A Guide for Determining Compliance with the Clean Air Act Standards for Radionuclides Emissions from NRC-Licensed and Non-DOE Federal Facilities”, EPA 520/1-89-002, October 1989.

(2) Environmental Protection Agency, “User's Guide for the COMPLY Code”, EPA 520/1-89-003, October 1989.

(3) Environmental Protection Agency, “Background Information Document: Procedures Approved for Demonstrating Compliance with 40 CFR Part 61, Subpart I”, EPA 520/1-89-001, January 1989.

(4) National Council on Radiation Protection and Measurement, “Screening Techniques for Determining Compliance with Environmental Standards” NCRP Commentary No. 3, Revision of January 1989 with addendum of October, 1989.

[54 FR 51711, Dec. 15, 1989]

Attachment O
To Part 70 Operating Permit Renewal No. T089-29907-00121

[Downloaded from the eCFR on May 10, 2013]

Title 40: Protection of Environment

Part 63, Subpart DDDDD—National Emission Standards for Hazardous Air Pollutants for Major Sources: Industrial, Commercial, and Institutional Boilers and Process Heaters

Source: 76 FR 15664, Mar. 21, 2011, unless otherwise noted.

What This Subpart Covers

§ 63.7480 What is the purpose of this subpart?

This subpart establishes national emission limitations and work practice standards for hazardous air pollutants (HAP) emitted from industrial, commercial, and institutional boilers and process heaters located at major sources of HAP. This subpart also establishes requirements to demonstrate initial and continuous compliance with the emission limitations and work practice standards.

§ 63.7485 Am I subject to this subpart?

You are subject to this subpart if you own or operate an industrial, commercial, or institutional boiler or process heater as defined in § 63.7575 that is located at, or is part of, a major source of HAP, except as specified in § 63.7491. For purposes of this subpart, a major source of HAP is as defined in § 63.2, except that for oil and natural gas production facilities, a major source of HAP is as defined in § 63.7575.

[78 FR 7162, Jan. 31, 2013]

§ 63.7490 What is the affected source of this subpart?

(a) This subpart applies to new, reconstructed, and existing affected sources as described in paragraphs (a)(1) and (2) of this section.

(1) The affected source of this subpart is the collection at a major source of all existing industrial, commercial, and institutional boilers and process heaters within a subcategory as defined in § 63.7575.

(2) The affected source of this subpart is each new or reconstructed industrial, commercial, or institutional boiler or process heater, as defined in § 63.7575, located at a major source.

(b) A boiler or process heater is new if you commence construction of the boiler or process heater after June 4, 2010, and you meet the applicability criteria at the time you commence construction.

(c) A boiler or process heater is reconstructed if you meet the reconstruction criteria as defined in § 63.2, you commence reconstruction after June 4, 2010, and you meet the applicability criteria at the time you commence reconstruction.

(d) A boiler or process heater is existing if it is not new or reconstructed.

(e) An existing electric utility steam generating unit (EGU) that meets the applicability requirements of this subpart after the effective date of this final rule due to a change (e.g., fuel switch) is considered to be an existing source under this subpart.

[76 FR 15664, Mar. 21, 2011, as amended at 78 FR 7162, Jan. 31, 2013]

§ 63.7491 Are any boilers or process heaters not subject to this subpart?

The types of boilers and process heaters listed in paragraphs (a) through (n) of this section are not subject to this subpart.

(a) An electric utility steam generating unit (EGU) covered by subpart UUUUU of this part.

(b) A recovery boiler or furnace covered by subpart MM of this part.

(c) A boiler or process heater that is used specifically for research and development, including test steam boilers used to provide steam for testing the propulsion systems on military vessels. This does not include units that provide heat or steam to a process at a research and development facility.

(d) A hot water heater as defined in this subpart.

(e) A refining kettle covered by subpart X of this part.

(f) An ethylene cracking furnace covered by subpart YY of this part.

(g) Blast furnace stoves as described in EPA-453/R-01-005 (incorporated by reference, see § 63.14).

(h) Any boiler or process heater that is part of the affected source subject to another subpart of this part, such as boilers and process heaters used as control devices to comply with subparts JJJ, OOO, PPP, and U of this part.

(i) Any boiler or process heater that is used as a control device to comply with another subpart of this part, or part 60, part 61, or part 65 of this chapter provided that at least 50 percent of the average annual heat input during any 3 consecutive calendar years to the boiler or process heater is provided by regulated gas streams that are subject to another standard.

(j) Temporary boilers as defined in this subpart.

(k) Blast furnace gas fuel-fired boilers and process heaters as defined in this subpart.

(l) Any boiler specifically listed as an affected source in any standard(s) established under section 129 of the Clean Air Act.

(m) A unit that burns hazardous waste covered by Subpart EEE of this part. A unit that is exempt from Subpart EEE as specified in § 63.1200(b) is not covered by Subpart EEE.

[76 FR 15664, Mar. 21, 2011, as amended at 78 FR 7162, Jan. 31, 2013]

EDITORIAL NOTE: At 78 FR 7162, Jan. 31, 2013, § 63.7491 was amended by revising paragraph (n). However, there is no paragraph (n) to revise.

§ 63.7495 When do I have to comply with this subpart?

(a) If you have a new or reconstructed boiler or process heater, you must comply with this subpart by January 31, 2013, or upon startup of your boiler or process heater, whichever is later.

(b) If you have an existing boiler or process heater, you must comply with this subpart no later than January 31, 2016, except as provided in § 63.6(i).

(c) If you have an area source that increases its emissions or its potential to emit such that it becomes a major source of HAP, paragraphs (c)(1) and (2) of this section apply to you.

(1) Any new or reconstructed boiler or process heater at the existing source must be in compliance with this subpart upon startup.

(2) Any existing boiler or process heater at the existing source must be in compliance with this subpart within 3 years after the source becomes a major source.

(d) You must meet the notification requirements in § 63.7545 according to the schedule in § 63.7545 and in subpart A of this part. Some of the notifications must be submitted before you are required to comply with the emission limits and work practice standards in this subpart.

(e) If you own or operate an industrial, commercial, or institutional boiler or process heater and would be subject to this subpart except for the exemption in § 63.7491(l) for commercial and industrial solid waste incineration units covered by part 60, subpart CCCC or subpart DDDD, and you cease combusting solid waste, you must be in compliance with this subpart on the effective date of the switch from waste to fuel.

(f) If you own or operate an existing EGU that becomes subject to this subpart after January 31, 2013, you must be in compliance with the applicable existing source provisions of this subpart on the effective date such unit becomes subject to this subpart.

(g) If you own or operate an existing industrial, commercial, or institutional boiler or process heater and would be subject to this subpart except for a exemption in § 63.7491(i) that becomes subject to this subpart after January 31, 2013, you must be in compliance with the applicable existing source provisions of this subpart within 3 years after such unit becomes subject to this subpart.

[76 FR 15664, Mar. 21, 2011, as amended at 78 FR 7162, Jan. 31, 2013]

EDITORIAL NOTE: At 78 FR 7162, Jan. 31, 2013, § 63.7495 was amended by adding paragraph (e). However, there is already a paragraph (e).

Emission Limitations and Work Practice Standards

§ 63.7499 What are the subcategories of boilers and process heaters?

The subcategories of boilers and process heaters, as defined in § 63.7575 are:

(a) Pulverized coal/solid fossil fuel units.

(b) Stokers designed to burn coal/solid fossil fuel.

(c) Fluidized bed units designed to burn coal/solid fossil fuel.

(d) Stokers/sloped grate/other units designed to burn kiln dried biomass/bio-based solid.

(e) Fluidized bed units designed to burn biomass/bio-based solid.

(f) Suspension burners designed to burn biomass/bio-based solid.

(g) Fuel cells designed to burn biomass/bio-based solid.

(h) Hybrid suspension/grate burners designed to burn wet biomass/bio-based solid.

(i) Stokers/sloped grate/other units designed to burn wet biomass/bio-based solid.

(j) Dutch ovens/pile burners designed to burn biomass/bio-based solid.

(k) Units designed to burn liquid fuel that are non-continental units.

(l) Units designed to burn gas 1 fuels.

(m) Units designed to burn gas 2 (other) gases.

(n) Metal process furnaces.

(o) Limited-use boilers and process heaters.

(p) Units designed to burn solid fuel.

(q) Units designed to burn liquid fuel.

(r) Units designed to burn coal/solid fossil fuel.

(s) Fluidized bed units with an integrated fluidized bed heat exchanger designed to burn coal/solid fossil fuel.

(t) Units designed to burn heavy liquid fuel.

(u) Units designed to burn light liquid fuel.

[76 FR 15664, Mar. 21, 2011, as amended at 78 FR 7163, Jan. 31, 2013]

§ 63.7500 What emission limitations, work practice standards, and operating limits must I meet?

(a) You must meet the requirements in paragraphs (a)(1) through (3) of this section, except as provided in paragraphs (b), through (e) of this section. You must meet these requirements at all times the affected unit is operating, except as provided in paragraph (f) of this section.

(1) You must meet each emission limit and work practice standard in Tables 1 through 3, and 11 through 13 to this subpart that applies to your boiler or process heater, for each boiler or process heater at your source, except as provided under § 63.7522. The output-based emission limits, in units of pounds per million Btu of steam output, in Tables 1 or 2 to this subpart are an alternative applicable only to boilers and process heaters that generate steam. The output-based emission limits, in units of pounds per megawatt-hour, in Tables 1 or 2 to this subpart are an alternative applicable only to boilers that generate electricity. If you operate a new boiler or process heater, you can choose to comply with alternative limits as discussed in paragraphs (a)(1)(i) through (a)(1)(iii) of this section, but on or after January 31, 2016, you must comply with the emission limits in Table 1 to this subpart.

(i) If your boiler or process heater commenced construction or reconstruction after June 4, 2010 and before May 20, 2011, you may comply with the emission limits in Table 1 or 11 to this subpart until January 31, 2016.

(ii) If your boiler or process heater commenced construction or reconstruction after May 20, 2011 and before December 23, 2011, you may comply with the emission limits in Table 1 or 12 to this subpart until January 31, 2016.

(iii) If your boiler or process heater commenced construction or reconstruction after December 23, 2011 and before January 31, 2013, you may comply with the emission limits in Table 1 or 13 to this subpart until January 31, 2016.

(2) You must meet each operating limit in Table 4 to this subpart that applies to your boiler or process heater. If you use a control device or combination of control devices not covered in Table 4 to this subpart, or you wish to establish and monitor an alternative operating limit or an alternative monitoring parameter, you must apply to the EPA Administrator for approval of alternative monitoring under § 63.8(f).

(3) At all times, you must operate and maintain any affected source (as defined in § 63.7490), including associated air pollution control equipment and monitoring equipment, in a manner consistent with safety and good air pollution

control practices for minimizing emissions. Determination of whether such operation and maintenance procedures are being used will be based on information available to the Administrator that may include, but is not limited to, monitoring results, review of operation and maintenance procedures, review of operation and maintenance records, and inspection of the source.

(b) As provided in § 63.6(g), EPA may approve use of an alternative to the work practice standards in this section.

(c) Limited-use boilers and process heaters must complete a tune-up every 5 years as specified in § 63.7540. They are not subject to the emission limits in Tables 1 and 2 or 11 through 13 to this subpart, the annual tune-up, or the energy assessment requirements in Table 3 to this subpart, or the operating limits in Table 4 to this subpart.

(d) Boilers and process heaters with a heat input capacity of less than or equal to 5 million Btu per hour in the units designed to burn gas 2 (other) fuels subcategory or units designed to burn light liquid fuels subcategory must complete a tune-up every 5 years as specified in § 63.7540.

(e) Boilers and process heaters in the units designed to burn gas 1 fuels subcategory with a heat input capacity of less than or equal to 5 million Btu per hour must complete a tune-up every 5 years as specified in § 63.7540. Boilers and process heaters in the units designed to burn gas 1 fuels subcategory with a heat input capacity greater than 5 million Btu per hour and less than 10 million Btu per hour must complete a tune-up every 2 years as specified in § 63.7540. Boilers and process heaters in the units designed to burn gas 1 fuels subcategory are not subject to the emission limits in Tables 1 and 2 or 11 through 13 to this subpart, or the operating limits in Table 4 to this subpart.

(f) These standards apply at all times the affected unit is operating, except during periods of startup and shutdown during which time you must comply only with Table 3 to this subpart.

[76 FR 15664, Mar. 21, 2011, as amended at 78 FR 7163, Jan. 31, 2013]

§ 63.7501 Affirmative Defense for Violation of Emission Standards During Malfunction.

In response to an action to enforce the standards set forth in § 63.7500 you may assert an affirmative defense to a claim for civil penalties for violations of such standards that are caused by malfunction, as defined at § 63.2. Appropriate penalties may be assessed if you fail to meet your burden of proving all of the requirements in the affirmative defense. The affirmative defense shall not be available for claims for injunctive relief.

(a) *Assertion of affirmative defense.* To establish the affirmative defense in any action to enforce such a standard, you must timely meet the reporting requirements in paragraph (b) of this section, and must prove by a preponderance of evidence that:

(1) The violation:

(i) Was caused by a sudden, infrequent, and unavoidable failure of air pollution control equipment, process equipment, or a process to operate in a normal or usual manner; and

(ii) Could not have been prevented through careful planning, proper design, or better operation and maintenance practices; and

(iii) Did not stem from any activity or event that could have been foreseen and avoided, or planned for; and

(iv) Was not part of a recurring pattern indicative of inadequate design, operation, or maintenance; and

(2) Repairs were made as expeditiously as possible when a violation occurred; and

(3) The frequency, amount, and duration of the violation (including any bypass) were minimized to the maximum extent practicable; and

(4) If the violation resulted from a bypass of control equipment or a process, then the bypass was unavoidable to prevent loss of life, personal injury, or severe property damage; and

(5) All possible steps were taken to minimize the impact of the violation on ambient air quality, the environment, and human health; and

(6) All emissions monitoring and control systems were kept in operation if at all possible, consistent with safety and good air pollution control practices; and

(7) All of the actions in response to the violation were documented by properly signed, contemporaneous operating logs; and

(8) At all times, the affected source was operated in a manner consistent with good practices for minimizing emissions; and

(9) A written root cause analysis has been prepared, the purpose of which is to determine, correct, and eliminate the primary causes of the malfunction and the violation resulting from the malfunction event at issue. The analysis shall also specify, using best monitoring methods and engineering judgment, the amount of any emissions that were the result of the malfunction.

(b) *Report.* The owner or operator seeking to assert an affirmative defense shall submit a written report to the Administrator with all necessary supporting documentation, that it has met the requirements set forth in § 63.7500 of this section. This affirmative defense report shall be included in the first periodic compliance, deviation report or excess emission report otherwise required after the initial occurrence of the violation of the relevant standard (which may be the end of any applicable averaging period). If such compliance, deviation report or excess emission report is due less than 45 days after the initial occurrence of the violation, the affirmative defense report may be included in the second compliance, deviation report or excess emission report due after the initial occurrence of the violation of the relevant standard.

[78 FR 7163, Jan. 31, 2013]

General Compliance Requirements

§ 63.7505 What are my general requirements for complying with this subpart?

(a) You must be in compliance with the emission limits, work practice standards, and operating limits in this subpart. These limits apply to you at all times the affected unit is operating except for the periods noted in § 63.7500(f).

(b) [Reserved]

(c) You must demonstrate compliance with all applicable emission limits using performance stack testing, fuel analysis, or continuous monitoring systems (CMS), including a continuous emission monitoring system (CEMS), continuous opacity monitoring system (COMS), continuous parameter monitoring system (CPMS), or particulate matter continuous parameter monitoring system (PM CPMS), where applicable. You may demonstrate compliance with the applicable emission limit for hydrogen chloride (HCl), mercury, or total selected metals (TSM) using fuel analysis if the emission rate calculated according to § 63.7530(c) is less than the applicable emission limit. (For gaseous fuels, you may not use fuel analyses to comply with the TSM alternative standard or the HCl standard.) Otherwise, you must demonstrate compliance for HCl, mercury, or TSM using performance testing, if subject to an applicable emission limit listed in Tables 1, 2, or 11 through 13 to this subpart.

(d) If you demonstrate compliance with any applicable emission limit through performance testing and subsequent compliance with operating limits (including the use of CPMS), or with a CEMS, or COMS, you must develop a site-specific monitoring plan according to the requirements in paragraphs (d)(1) through (4) of this section for the use of any CEMS, COMS, or CPMS. This requirement also applies to you if you petition the EPA Administrator for alternative monitoring parameters under § 63.8(f).

(1) For each CMS required in this section (including CEMS, COMS, or CPMS), you must develop, and submit to the Administrator for approval upon request, a site-specific monitoring plan that addresses design, data collection, and the quality assurance and quality control elements outlined in § 63.8(d) and the elements described in paragraphs (d)(1)(i) through (iii) of this section. You must submit this site-specific monitoring plan, if requested, at least 60 days before your initial performance evaluation of your CMS. This requirement to develop and submit a site specific monitoring plan does not apply to affected sources with existing CEMS or COMS operated according to the performance specifications under appendix B to part 60 of this chapter and that meet the requirements of § 63.7525. Using the process described in § 63.8(f)(4), you may request approval of alternative monitoring system quality assurance and quality control procedures in place of those specified in this paragraph and, if approved, include the alternatives in your site-specific monitoring plan.

(i) Installation of the CMS sampling probe or other interface at a measurement location relative to each affected process unit such that the measurement is representative of control of the exhaust emissions (e.g., on or downstream of the last control device);

(ii) Performance and equipment specifications for the sample interface, the pollutant concentration or parametric signal analyzer, and the data collection and reduction systems; and

(iii) Performance evaluation procedures and acceptance criteria (e.g., calibrations, accuracy audits, analytical drift).

(2) In your site-specific monitoring plan, you must also address paragraphs (d)(2)(i) through (iii) of this section.

(i) Ongoing operation and maintenance procedures in accordance with the general requirements of § 63.8(c)(1)(ii), (c)(3), and (c)(4)(ii);

(ii) Ongoing data quality assurance procedures in accordance with the general requirements of § 63.8(d); and

(iii) Ongoing recordkeeping and reporting procedures in accordance with the general requirements of § 63.10(c) (as applicable in Table 10 to this subpart), (e)(1), and (e)(2)(i).

(3) You must conduct a performance evaluation of each CMS in accordance with your site-specific monitoring plan.

(4) You must operate and maintain the CMS in continuous operation according to the site-specific monitoring plan.

[76 FR 15664, Mar. 21, 2011, as amended at 78 FR 7164, Jan. 31, 2013]

Testing, Fuel Analyses, and Initial Compliance Requirements

§ 63.7510 What are my initial compliance requirements and by what date must I conduct them?

(a) For each boiler or process heater that is required or that you elect to demonstrate compliance with any of the applicable emission limits in Tables 1 or 2 or 11 through 13 of this subpart through performance testing, your initial compliance requirements include all the following:

(1) Conduct performance tests according to § 63.7520 and Table 5 to this subpart.

(2) Conduct a fuel analysis for each type of fuel burned in your boiler or process heater according to § 63.7521 and Table 6 to this subpart, except as specified in paragraphs (a)(2)(i) through (iii) of this section.

(i) For each boiler or process heater that burns a single type of fuel, you are not required to conduct a fuel analysis for each type of fuel burned in your boiler or process heater according to § 63.7521 and Table 6 to this subpart. For purposes of this subpart, units that use a supplemental fuel only for startup, unit shutdown, and transient flame stability purposes still qualify as units that burn a single type of fuel, and the supplemental fuel is not subject to the fuel analysis requirements under § 63.7521 and Table 6 to this subpart.

(ii) When natural gas, refinery gas, or other gas 1 fuels are co-fired with other fuels, you are not required to conduct a fuel analysis of those fuels according to § 63.7521 and Table 6 to this subpart. If gaseous fuels other than natural gas, refinery gas, or other gas 1 fuels are co-fired with other fuels and those gaseous fuels are subject to another subpart of this part, part 60, part 61, or part 65, you are not required to conduct a fuel analysis of those fuels according to § 63.7521 and Table 6 to this subpart.

(iii) You are not required to conduct a chlorine fuel analysis for any gaseous fuels. You must conduct a fuel analysis for mercury on gaseous fuels unless the fuel is exempted in paragraphs (a)(2)(i) and (ii) of this section.

(3) Establish operating limits according to § 63.7530 and Table 7 to this subpart.

(4) Conduct CMS performance evaluations according to § 63.7525.

(b) For each boiler or process heater that you elect to demonstrate compliance with the applicable emission limits in Tables 1 or 2 or 11 through 13 to this subpart for HCl, mercury, or TSM through fuel analysis, your initial compliance requirement is to conduct a fuel analysis for each type of fuel burned in your boiler or process heater according to § 63.7521 and Table 6 to this subpart and establish operating limits according to § 63.7530 and Table 8 to this subpart. The fuels described in paragraph (a)(2)(i) and (ii) of this section are exempt from these fuel analysis and operating limit requirements. The fuels described in paragraph (a)(2)(ii) of this section are exempt from the chloride fuel analysis and operating limit requirements. Boilers and process heaters that use a CEMS for mercury or HCl are exempt from the performance testing and operating limit requirements specified in paragraph (a) of this section for the HAP for which CEMS are used.

(c) If your boiler or process heater is subject to a carbon monoxide (CO) limit, your initial compliance demonstration for CO is to conduct a performance test for CO according to Table 5 to this subpart or conduct a performance evaluation of your continuous CO monitor, if applicable, according to § 63.7525(a). Boilers and process heaters that use a CO CEMS to comply with the applicable alternative CO CEMS emission standard listed in Tables 12, or 11 through 13 to this subpart, as specified in § 63.7525(a), are exempt from the initial CO performance testing and oxygen concentration operating limit requirements specified in paragraph (a) of this section.

(d) If your boiler or process heater is subject to a PM limit, your initial compliance demonstration for PM is to conduct a performance test in accordance with § 63.7520 and Table 5 to this subpart.

(e) For existing affected sources (as defined in § 63.7490), you must complete the initial compliance demonstration, as specified in paragraphs (a) through (d) of this section, no later than 180 days after the compliance date that is specified for your source in § 63.7495 and according to the applicable provisions in § 63.7(a)(2) as cited in Table 10 to this subpart, except as specified in paragraph (j) of this section. You must complete an initial tune-up by following the procedures described in § 63.7540(a)(10)(i) through (vi) no later than the compliance date specified in § 63.7495, except as specified in paragraph (j) of this section. You must complete the one-time energy assessment specified in Table 3 to this subpart no later than the compliance date specified in § 63.7495, except as specified in paragraph (j) of this section.

(f) For new or reconstructed affected sources (as defined in § 63.7490), you must complete the initial compliance demonstration with the emission limits no later than July 30, 2013 or within 180 days after startup of the source, whichever is later. If you are demonstrating compliance with an emission limit in Tables 11 through 13 to this subpart that is less stringent (that is, higher) than the applicable emission limit in Table 1 to this subpart, you must demonstrate compliance with the applicable emission limit in Table 1 no later than July 29, 2016.

(g) For new or reconstructed affected sources (as defined in § 63.7490), you must demonstrate initial compliance with the applicable work practice standards in Table 3 to this subpart within the applicable annual, biennial, or 5-year schedule as specified in § 63.7540(a) following the initial compliance date specified in § 63.7495(a). Thereafter, you are required to complete the applicable annual, biennial, or 5-year tune-up as specified in § 63.7540(a).

(h) For affected sources (as defined in § 63.7490) that ceased burning solid waste consistent with § 63.7495(e) and for which the initial compliance date has passed, you must demonstrate compliance within 60 days of the effective date of the waste-to-fuel switch. If you have not conducted your compliance demonstration for this subpart within the previous 12 months, you must complete all compliance demonstrations for this subpart before you commence or recommence combustion of solid waste.

(i) For an existing EGU that becomes subject after January 31, 2013, you must demonstrate compliance within 180 days after becoming an affected source.

(j) For existing affected sources (as defined in § 63.7490) that have not operated between the effective date of the rule and the compliance date that is specified for your source in § 63.7495, you must complete the initial compliance demonstration, if subject to the emission limits in Table 2 to this subpart, as specified in paragraphs (a) through (d) of this section, no later than 180 days after the re-start of the affected source and according to the applicable provisions in § 63.7(a)(2) as cited in Table 10 to this subpart. You must complete an initial tune-up by following the procedures described in § 63.7540(a)(10)(i) through (vi) no later than 30 days after the re-start of the affected source and, if applicable, complete the one-time energy assessment specified in Table 3 to this subpart, no later than the compliance date specified in § 63.7495.

[78 FR 7164, Jan. 31, 2013]

§ 63.7515 When must I conduct subsequent performance tests, fuel analyses, or tune-ups?

(a) You must conduct all applicable performance tests according to § 63.7520 on an annual basis, except as specified in paragraphs (b) through (e), (g), and (h) of this section. Annual performance tests must be completed no more than 13 months after the previous performance test, except as specified in paragraphs (b) through (e), (g), and (h) of this section.

(b) If your performance tests for a given pollutant for at least 2 consecutive years show that your emissions are at or below 75 percent of the emission limit (or, in limited instances as specified in Tables 1 and 2 or 11 through 13 to this subpart, at or below the emission limit) for the pollutant, and if there are no changes in the operation of the individual boiler or process heater or air pollution control equipment that could increase emissions, you may choose to conduct performance tests for the pollutant every third year. Each such performance test must be conducted no more than 37 months after the previous performance test. If you elect to demonstrate compliance using emission averaging under § 63.7522, you must continue to conduct performance tests annually. The requirement to test at maximum chloride input level is waived unless the stack test is conducted for HCl. The requirement to test at maximum mercury input level is waived unless the stack test is conducted for mercury. The requirement to test at maximum TSM input level is waived unless the stack test is conducted for TSM.

(c) If a performance test shows emissions exceeded the emission limit or 75 percent of the emission limit (as specified in Tables 1 and 2 or 11 through 13 to this subpart) for a pollutant, you must conduct annual performance tests for that pollutant until all performance tests over a consecutive 2-year period meet the required level (at or below 75 percent of the emission limit, as specified in Tables 1 and 2 or 11 through 13 to this subpart).

(d) If you are required to meet an applicable tune-up work practice standard, you must conduct an annual, biennial, or 5-year performance tune-up according to § 63.7540(a)(10), (11), or (12), respectively. Each annual tune-up specified in § 63.7540(a)(10) must be no more than 13 months after the previous tune-up. Each biennial tune-up specified in § 63.7540(a)(11) must be conducted no more than 25 months after the previous tune-up. Each 5-year tune-up specified in § 63.7540(a)(12) must be conducted no more than 61 months after the previous tune-up. For a new or reconstructed affected source (as defined in § 63.7490), the first annual, biennial, or 5-year tune-up must be no later than 13 months, 25 months, or 61 months, respectively, after the initial startup of the new or reconstructed affected source.

(e) If you demonstrate compliance with the mercury, HCl, or TSM based on fuel analysis, you must conduct a monthly fuel analysis according to § 63.7521 for each type of fuel burned that is subject to an emission limit in Tables 1, 2, or 11 through 13 to this subpart. You may comply with this monthly requirement by completing the fuel analysis any time within the calendar month as long as the analysis is separated from the previous analysis by at least 14 calendar days. If you burn a new type of fuel, you must conduct a fuel analysis before burning the new type of fuel in your boiler or process heater. You must still meet all applicable continuous compliance requirements in § 63.7540. If each of 12 consecutive monthly fuel analyses demonstrates 75 percent or less of the compliance level, you may decrease the fuel analysis frequency to quarterly for that fuel. If any quarterly sample exceeds 75 percent of the compliance level or you begin burning a new type of fuel, you must return to monthly monitoring for that fuel, until 12 months of fuel analyses are again less than 75 percent of the compliance level.

(f) You must report the results of performance tests and the associated fuel analyses within 60 days after the completion of the performance tests. This report must also verify that the operating limits for each boiler or process

heater have not changed or provide documentation of revised operating limits established according to § 63.7530 and Table 7 to this subpart, as applicable. The reports for all subsequent performance tests must include all applicable information required in § 63.7550.

(g) For affected sources (as defined in § 63.7490) that have not operated since the previous compliance demonstration and more than one year has passed since the previous compliance demonstration, you must complete the subsequent compliance demonstration, if subject to the emission limits in Tables 1, 2, or 11 through 13 to this subpart, no later than 180 days after the re-start of the affected source and according to the applicable provisions in § 63.7(a)(2) as cited in Table 10 to this subpart. You must complete a subsequent tune-up by following the procedures described in § 63.7540(a)(10)(i) through (vi) and the schedule described in § 63.7540(a)(13) for units that are not operating at the time of their scheduled tune-up.

(h) If your affected boiler or process heater is in the unit designed to burn light liquid subcategory and you combust ultra low sulfur liquid fuel, you do not need to conduct further performance tests if the pollutants measured during the initial compliance performance tests meet the emission limits in Tables 1 or 2 of this subpart providing you demonstrate ongoing compliance with the emissions limits by monitoring and recording the type of fuel combusted on a monthly basis. If you intend to use a fuel other than ultra low sulfur liquid fuel, natural gas, refinery gas, or other gas 1 fuel, you must conduct new performance tests within 60 days of burning the new fuel type.

(i) If you operate a CO CEMS that meets the Performance Specifications outlined in § 63.7525(a)(3) of this subpart to demonstrate compliance with the applicable alternative CO CEMS emission standard listed in Tables 1, 2, or 11 through 13 to this subpart, you are not required to conduct CO performance tests and are not subject to the oxygen concentration operating limit requirement specified in § 63.7510(a).

[78 FR 7165, Jan. 31, 2013]

§ 63.7520 What stack tests and procedures must I use?

(a) You must conduct all performance tests according to § 63.7(c), (d), (f), and (h). You must also develop a site-specific stack test plan according to the requirements in § 63.7(c). You shall conduct all performance tests under such conditions as the Administrator specifies to you based on the representative performance of each boiler or process heater for the period being tested. Upon request, you shall make available to the Administrator such records as may be necessary to determine the conditions of the performance tests.

(b) You must conduct each performance test according to the requirements in Table 5 to this subpart.

(c) You must conduct each performance test under the specific conditions listed in Tables 5 and 7 to this subpart. You must conduct performance tests at representative operating load conditions while burning the type of fuel or mixture of fuels that has the highest content of chlorine and mercury, and TSM if you are opting to comply with the TSM alternative standard and you must demonstrate initial compliance and establish your operating limits based on these performance tests. These requirements could result in the need to conduct more than one performance test. Following each performance test and until the next performance test, you must comply with the operating limit for operating load conditions specified in Table 4 to this subpart.

(d) You must conduct a minimum of three separate test runs for each performance test required in this section, as specified in § 63.7(e)(3). Each test run must comply with the minimum applicable sampling times or volumes specified in Tables 1 and 2 or 11 through 13 to this subpart.

(e) To determine compliance with the emission limits, you must use the F-Factor methodology and equations in sections 12.2 and 12.3 of EPA Method 19 at 40 CFR part 60, appendix A-7 of this chapter to convert the measured particulate matter (PM) concentrations, the measured HCl concentrations, the measured mercury concentrations, and the measured TSM concentrations that result from the performance test to pounds per million Btu heat input emission rates.

(f) Except for a 30-day rolling average based on CEMS (or sorbent trap monitoring system) data, if measurement results for any pollutant are reported as below the method detection level (e.g., laboratory analytical results for one or more sample components are below the method defined analytical detection level), you must use the method detection level as the measured emissions level for that pollutant in calculating compliance. The measured result for

a multiple component analysis (e.g., analytical values for multiple Method 29 fractions both for individual HAP metals and for total HAP metals) may include a combination of method detection level data and analytical data reported above the method detection level.

[76 FR 15664, Mar. 21, 2011, as amended at 78 FR 7166, Jan. 31, 2013]

§ 63.7521 What fuel analyses, fuel specification, and procedures must I use?

(a) For solid and liquid fuels, you must conduct fuel analyses for chloride and mercury according to the procedures in paragraphs (b) through (e) of this section and Table 6 to this subpart, as applicable. For solid fuels and liquid fuels, you must also conduct fuel analyses for TSM if you are opting to comply with the TSM alternative standard. For gas 2 (other) fuels, you must conduct fuel analyses for mercury according to the procedures in paragraphs (b) through (e) of this section and Table 6 to this subpart, as applicable. (For gaseous fuels, you may not use fuel analyses to comply with the TSM alternative standard or the HCl standard.) For purposes of complying with this section, a fuel gas system that consists of multiple gaseous fuels collected and mixed with each other is considered a single fuel type and sampling and analysis is only required on the combined fuel gas system that will feed the boiler or process heater. Sampling and analysis of the individual gaseous streams prior to combining is not required. You are not required to conduct fuel analyses for fuels used for only startup, unit shutdown, and transient flame stability purposes. You are required to conduct fuel analyses only for fuels and units that are subject to emission limits for mercury, HCl, or TSM in Tables 1 and 2 or 11 through 13 to this subpart. Gaseous and liquid fuels are exempt from the sampling requirements in paragraphs (c) and (d) of this section and Table 6 to this subpart.

(b) You must develop a site-specific fuel monitoring plan according to the following procedures and requirements in paragraphs (b)(1) and (2) of this section, if you are required to conduct fuel analyses as specified in § 63.7510.

(1) If you intend to use an alternative analytical method other than those required by Table 6 to this subpart, you must submit the fuel analysis plan to the Administrator for review and approval no later than 60 days before the date that you intend to conduct the initial compliance demonstration described in § 63.7510.

(2) You must include the information contained in paragraphs (b)(2)(i) through (vi) of this section in your fuel analysis plan.

(i) The identification of all fuel types anticipated to be burned in each boiler or process heater.

(ii) For each anticipated fuel type, the notification of whether you or a fuel supplier will be conducting the fuel analysis.

(iii) For each anticipated fuel type, a detailed description of the sample location and specific procedures to be used for collecting and preparing the composite samples if your procedures are different from paragraph (c) or (d) of this section. Samples should be collected at a location that most accurately represents the fuel type, where possible, at a point prior to mixing with other dissimilar fuel types.

(iv) For each anticipated fuel type, the analytical methods from Table 6, with the expected minimum detection levels, to be used for the measurement of chlorine or mercury.

(v) If you request to use an alternative analytical method other than those required by Table 6 to this subpart, you must also include a detailed description of the methods and procedures that you are proposing to use. Methods in Table 6 shall be used until the requested alternative is approved.

(vi) If you will be using fuel analysis from a fuel supplier in lieu of site-specific sampling and analysis, the fuel supplier must use the analytical methods required by Table 6 to this subpart.

(c) At a minimum, you must obtain three composite fuel samples for each fuel type according to the procedures in paragraph (c)(1) or (2) of this section, or the methods listed in Table 6 to this subpart, or use an automated sampling mechanism that provides representative composite fuel samples for each fuel type that includes both coarse and fine material.

(1) If sampling from a belt (or screw) feeder, collect fuel samples according to paragraphs (c)(1)(i) and (ii) of this section.

(i) Stop the belt and withdraw a 6-inch wide sample from the full cross-section of the stopped belt to obtain a minimum two pounds of sample. You must collect all the material (fines and coarse) in the full cross-section. You must transfer the sample to a clean plastic bag.

(ii) Each composite sample will consist of a minimum of three samples collected at approximately equal one-hour intervals during the testing period for sampling during performance stack testing. For monthly sampling, each composite sample shall be collected at approximately equal 10-day intervals during the month.

(2) If sampling from a fuel pile or truck, you must collect fuel samples according to paragraphs (c)(2)(i) through (iii) of this section.

(i) For each composite sample, you must select a minimum of five sampling locations uniformly spaced over the surface of the pile.

(ii) At each sampling site, you must dig into the pile to a uniform depth of approximately 18 inches. You must insert a clean shovel into the hole and withdraw a sample, making sure that large pieces do not fall off during sampling; use the same shovel to collect all samples.

(iii) You must transfer all samples to a clean plastic bag for further processing.

(d) You must prepare each composite sample according to the procedures in paragraphs (d)(1) through (7) of this section.

(1) You must thoroughly mix and pour the entire composite sample over a clean plastic sheet.

(2) You must break large sample pieces (e.g., larger than 3 inches) into smaller sizes.

(3) You must make a pie shape with the entire composite sample and subdivide it into four equal parts.

(4) You must separate one of the quarter samples as the first subset.

(5) If this subset is too large for grinding, you must repeat the procedure in paragraph (d)(3) of this section with the quarter sample and obtain a one-quarter subset from this sample.

(6) You must grind the sample in a mill.

(7) You must use the procedure in paragraph (d)(3) of this section to obtain a one-quarter subsample for analysis. If the quarter sample is too large, subdivide it further using the same procedure.

(e) You must determine the concentration of pollutants in the fuel (mercury and/or chlorine and/or TSM) in units of pounds per million Btu of each composite sample for each fuel type according to the procedures in Table 6 to this subpart, for use in Equations 7, 8, and 9 of this subpart.

(f) To demonstrate that a gaseous fuel other than natural gas or refinery gas qualifies as an other gas 1 fuel, as defined in § 63.7575, you must conduct a fuel specification analyses for mercury according to the procedures in paragraphs (g) through (i) of this section and Table 6 to this subpart, as applicable, except as specified in paragraph (f)(1) through (4) of this section.

(1) You are not required to conduct the fuel specification analyses in paragraphs (g) through (i) of this section for natural gas or refinery gas.

(2) You are not required to conduct the fuel specification analyses in paragraphs (g) through (i) of this section for gaseous fuels that are subject to another subpart of this part, part 60, part 61, or part 65.

(3) You are not required to conduct the fuel specification analyses in paragraphs (g) through (i) of this section on gaseous fuels for units that are complying with the limits for units designed to burn gas 2 (other) fuels.

(4) You are not required to conduct the fuel specification analyses in paragraphs (g) through (i) of this section for gas streams directly derived from natural gas at natural gas production sites or natural gas plants.

(g) You must develop and submit a site-specific fuel analysis plan for other gas 1 fuels to the EPA Administrator for review and approval according to the following procedures and requirements in paragraphs (g)(1) and (2) of this section.

(1) If you intend to use an alternative analytical method other than those required by Table 6 to this subpart, you must submit the fuel analysis plan to the Administrator for review and approval no later than 60 days before the date that you intend to conduct the initial compliance demonstration described in § 63.7510.

(2) You must include the information contained in paragraphs (g)(2)(i) through (vi) of this section in your fuel analysis plan.

(i) The identification of all gaseous fuel types other than those exempted from fuel specification analysis under (f)(1) through (3) of this section anticipated to be burned in each boiler or process heater.

(ii) For each anticipated fuel type, the notification of whether you or a fuel supplier will be conducting the fuel specification analysis.

(iii) For each anticipated fuel type, a detailed description of the sample location and specific procedures to be used for collecting and preparing the samples if your procedures are different from the sampling methods contained in Table 6 to this subpart. Samples should be collected at a location that most accurately represents the fuel type, where possible, at a point prior to mixing with other dissimilar fuel types. If multiple boilers or process heaters are fueled by a common fuel stream it is permissible to conduct a single gas specification at the common point of gas distribution.

(iv) For each anticipated fuel type, the analytical methods from Table 6 to this subpart, with the expected minimum detection levels, to be used for the measurement of mercury.

(v) If you request to use an alternative analytical method other than those required by Table 6 to this subpart, you must also include a detailed description of the methods and procedures that you are proposing to use. Methods in Table 6 to this subpart shall be used until the requested alternative is approved.

(vi) If you will be using fuel analysis from a fuel supplier in lieu of site-specific sampling and analysis, the fuel supplier must use the analytical methods required by Table 6 to this subpart.

(h) You must obtain a single fuel sample for each fuel type according to the sampling procedures listed in Table 6 for fuel specification of gaseous fuels.

(i) You must determine the concentration in the fuel of mercury, in units of microgram per cubic meter, dry basis, of each sample for each other gas 1 fuel type according to the procedures in Table 6 to this subpart.

[78 FR 7167, Jan. 31, 2013]

§ 63.7522 Can I use emissions averaging to comply with this subpart?

(a) As an alternative to meeting the requirements of § 63.7500 for PM (or TSM), HCl, or mercury on a boiler or process heater-specific basis, if you have more than one existing boiler or process heater in any subcategories located at your facility, you may demonstrate compliance by emissions averaging, if your averaged emissions are not more than 90 percent of the applicable emission limit, according to the procedures in this section. You may not include new boilers or process heaters in an emissions average.

(b) For a group of two or more existing boilers or process heaters in the same subcategory that each vent to a separate stack, you may average PM (or TSM), HCl, or mercury emissions among existing units to demonstrate compliance with the limits in Table 2 to this subpart as specified in paragraph (b)(1) through (3) of this section, if you satisfy the requirements in paragraphs (c) through (g) of this section.

(1) You may average units using a CEMS or PM CPMS for demonstrating compliance.

(2) For mercury and HCl, averaging is allowed as follows:

(i) You may average among units in any of the solid fuel subcategories.

(ii) You may average among units in any of the liquid fuel subcategories.

(iii) You may average among units in a subcategory of units designed to burn gas 2 (other) fuels.

(iv) You may not average across the units designed to burn liquid, units designed to burn solid fuel, and units designed to burn gas 2 (other) subcategories.

(3) For PM (or TSM), averaging is only allowed between units within each of the following subcategories and you may not average across subcategories:

(i) Units designed to burn coal/solid fossil fuel.

(ii) Stokers/sloped grate/other units designed to burn kiln dried biomass/bio-based solids.

(iii) Stokers/sloped grate/other units designed to burn wet biomass/bio-based solids.

(iv) Fluidized bed units designed to burn biomass/bio-based solid.

(v) Suspension burners designed to burn biomass/bio-based solid.

(vi) Dutch ovens/pile burners designed to burn biomass/bio-based solid.

(vii) Fuel Cells designed to burn biomass/bio-based solid.

(viii) Hybrid suspension/grate burners designed to burn wet biomass/bio-based solid.

(ix) Units designed to burn heavy liquid fuel.

(x) Units designed to burn light liquid fuel.

(xi) Units designed to burn liquid fuel that are non-continental units.

(xii) Units designed to burn gas 2 (other) gases.

(c) For each existing boiler or process heater in the averaging group, the emission rate achieved during the initial compliance test for the HAP being averaged must not exceed the emission level that was being achieved on January 31, 2013 or the control technology employed during the initial compliance test must not be less effective for the HAP being averaged than the control technology employed on January 31, 2013.

(d) The averaged emissions rate from the existing boilers and process heaters participating in the emissions averaging option must not exceed 90 percent of the limits in Table 2 to this subpart at all times the affected units are operating following the compliance date specified in § 63.7495.

(e) You must demonstrate initial compliance according to paragraph (e)(1) or (2) of this section using the maximum rated heat input capacity or maximum steam generation capacity of each unit and the results of the initial performance tests or fuel analysis.

(1) You must use Equation 1a or 1b or 1c of this section to demonstrate that the PM (or TSM), HCl, or mercury emissions from all existing units participating in the emissions averaging option for that pollutant do not exceed the emission limits in Table 2 to this subpart. Use Equation 1a if you are complying with the emission limits on a heat input basis, use Equation 1b if you are complying with the emission limits on a steam generation (output) basis, and use Equation 1c if you are complying with the emission limits on a electric generation (output) basis.

$$AveWeightedEmissions = 1.1 \times \sum_{i=1}^{n} (Er \times Hm) \div \sum_{i=1}^{n} Hm \qquad \text{(Eq.1a)}$$

Where:

AveWeightedEmissions = Average weighted emissions for PM (or TSM), HCl, or mercury, in units of pounds per million Btu of heat input.

Er = Emission rate (as determined during the initial compliance demonstration) of PM (or TSM), HCl, or mercury from unit, i, in units of pounds per million Btu of heat input. Determine the emission rate for PM (or TSM), HCl, or mercury by performance testing according to Table 5 to this subpart, or by fuel analysis for HCl or mercury or TSM using the applicable equation in § 63.7530(c).

Hm = Maximum rated heat input capacity of unit, i, in units of million Btu per hour.

n = Number of units participating in the emissions averaging option.

1.1 = Required discount factor.

$$AveWeightedEmissions = 1.1 \times \sum_{i=1}^{n} (Er \times So) \div \sum_{i=1}^{n} So \qquad \text{(Eq.1b)}$$

Where:

AveWeightedEmissions = Average weighted emissions for PM (or TSM), HCl, or mercury, in units of pounds per million Btu of steam output.

Er = Emission rate (as determined during the initial compliance demonstration) of PM (or TSM), HCl, or mercury from unit, i, in units of pounds per million Btu of steam output. Determine the emission rate for PM (or TSM), HCl, or mercury by performance testing according to Table 5 to this subpart, or by fuel analysis for HCl or mercury or TSM using the applicable equation in § 63.7530(c). If you are taking credit for energy conservation measures from a unit according to § 63.7533, use the adjusted emission level for that unit, Eadj, determined according to § 63.7533 for that unit.

So = Maximum steam output capacity of unit, i, in units of million Btu per hour, as defined in § 63.7575.

n = Number of units participating in the emissions averaging option.

1.1 = Required discount factor.

$$AveWeightedEmissions = 1.1 \times \sum_{i=1}^{n} (Er \times Eo) \div \sum_{i=1}^{n} Eo \qquad \text{(Eq.1c)}$$

Where:

AveWeightedEmissions = Average weighted emissions for PM (or TSM), HCl, or mercury, in units of pounds per megawatt hour.

Er = Emission rate (as determined during the initial compliance demonstration) of PM (or TSM), HCl, or mercury from unit, i, in units of pounds per megawatt hour. Determine the emission rate for PM (or TSM), HCl, or mercury by performance testing according to Table 5 to this subpart, or by fuel analysis for HCl or mercury or TSM using the applicable equation in § 63.7530(c). If you are taking credit for energy conservation measures from a unit according to § 63.7533, use the adjusted emission level for that unit, Eadj, determined according to § 63.7533 for that unit.

Eo = Maximum electric generating output capacity of unit, i, in units of megawatt hour, as defined in § 63.7575.

n = Number of units participating in the emissions averaging option.

1.1 = Required discount factor.

(2) If you are not capable of determining the maximum rated heat input capacity of one or more boilers that generate steam, you may use Equation 2 of this section as an alternative to using Equation 1a of this section to demonstrate that the PM (or TSM), HCl, or mercury emissions from all existing units participating in the emissions averaging option do not exceed the emission limits for that pollutant in Table 2 to this subpart that are in pounds per million Btu of heat input.

$$AveWeightedEmissions = 1.1 \times \sum_{i=1}^{n} (Er \times Sm \times Cfi) \div \sum_{i=1}^{n} (Sm \times Cfi) \quad \text{(Eq. 2)}$$

Where:

AveWeightedEmissions = Average weighted emission level for PM (or TSM), HCl, or mercury, in units of pounds per million Btu of heat input.

Er = Emission rate (as determined during the most recent compliance demonstration) of PM (or TSM), HCl, or mercury from unit, i, in units of pounds per million Btu of heat input. Determine the emission rate for PM (or TSM), HCl, or mercury by performance testing according to Table 5 to this subpart, or by fuel analysis for HCl or mercury or TSM using the applicable equation in § 63.7530(c).

Sm = Maximum steam generation capacity by unit, i, in units of pounds per hour.

Cfi = Conversion factor, calculated from the most recent compliance test, in units of million Btu of heat input per pounds of steam generated for unit, i.

1.1 = Required discount factor.

(f) After the initial compliance demonstration described in paragraph (e) of this section, you must demonstrate compliance on a monthly basis determined at the end of every month (12 times per year) according to paragraphs (f)(1) through (3) of this section. The first monthly period begins on the compliance date specified in § 63.7495. If the affected source elects to collect monthly data for up the 11 months preceding the first monthly period, these additional data points can be used to compute the 12-month rolling average in paragraph (f)(3) of this section.

(1) For each calendar month, you must use Equation 3a or 3b or 3c of this section to calculate the average weighted emission rate for that month. Use Equation 3a and the actual heat input for the month for each existing unit participating in the emissions averaging option if you are complying with emission limits on a heat input basis. Use Equation 3b and the actual steam generation for the month if you are complying with the emission limits on a steam generation (output) basis. Use Equation 3c and the actual steam generation for the month if you are complying with the emission limits on a electrical generation (output) basis.

$$AveWeightedEmissions = 1.1 \times \sum_{i=1}^{n} (Er \times Hb) \div \sum_{i=1}^{n} Hb \quad \text{(Eq. 3a)}$$

Where:

AveWeightedEmissions = Average weighted emission level for PM (or TSM), HCl, or mercury, in units of pounds per million Btu of heat input, for that calendar month.

Er = Emission rate (as determined during the most recent compliance demonstration) of PM (or TSM), HCl, or mercury from unit, i, in units of pounds per million Btu of heat input. Determine the emission rate for PM (or TSM), HCl, or mercury by performance testing according to Table 5 to this subpart, or by fuel analysis for HCl or mercury or TSM according to Table 6 to this subpart.

Hb = The heat input for that calendar month to unit, i, in units of million Btu.

n = Number of units participating in the emissions averaging option.

1.1 = Required discount factor.

$$AveWeightedEmissions = 1.1 \times \sum_{i=1}^{n} (Er \times So) \div \sum_{i=1}^{n} So \quad \text{(Eq. 3b)}$$

Where:

AveWeightedEmissions = Average weighted emission level for PM (or TSM), HCl, or mercury, in units of pounds per million Btu of steam output, for that calendar month.

Er = Emission rate (as determined during the most recent compliance demonstration) of PM (or TSM), HCl, or mercury from unit, i, in units of pounds per million Btu of steam output. Determine the emission rate for PM (or TSM), HCl, or mercury by performance testing according to Table 5 to this subpart, or by fuel analysis for HCl or mercury or TSM according to Table 6 to this subpart. If you are taking credit for energy conservation measures from a unit according to § 63.7533, use the adjusted emission level for that unit, E_{adj} , determined according to § 63.7533 for that unit.

So = The steam output for that calendar month from unit, i, in units of million Btu, as defined in § 63.7575.

n = Number of units participating in the emissions averaging option.

1.1 = Required discount factor.

$$AveWeightedEmissions = 1.1 \times \sum_{i=1}^{n} (Er \times Eo) \div \sum_{i=1}^{n} Eo \quad \text{(Eq. 3c)}$$

Where:

AveWeightedEmissions = Average weighted emission level for PM (or TSM), HCl, or mercury, in units of pounds per megawatt hour, for that calendar month.

Er = Emission rate (as determined during the most recent compliance demonstration) of PM (or TSM), HCl, or mercury from unit, i, in units of pounds per megawatt hour. Determine the emission rate for PM (or TSM), HCl, or mercury by performance testing according to Table 5 to this subpart, or by fuel analysis for HCl or mercury or TSM according to Table 6 to this subpart. If you are taking credit for energy conservation measures from a unit according to § 63.7533, use the adjusted emission level for that unit, E_{adj} , determined according to § 63.7533 for that unit.

Eo = The electric generating output for that calendar month from unit, i, in units of megawatt hour, as defined in § 63.7575.

n = Number of units participating in the emissions averaging option.

1.1 = Required discount factor.

(2) If you are not capable of monitoring heat input, you may use Equation 4 of this section as an alternative to using Equation 3a of this section to calculate the average weighted emission rate using the actual steam generation from the boilers participating in the emissions averaging option.

$$AveWeightedEmissions = 1.1 \times \sum_{i=1}^{n} (Er \times Sa \times Cfi) \div \sum_{i=1}^{n} (Sa \times Cfi) \quad \text{(Eq. 4)}$$

Where:

AveWeightedEmissions = average weighted emission level for PM (or TSM), HCl, or mercury, in units of pounds per million Btu of heat input for that calendar month.

Er = Emission rate (as determined during the most recent compliance demonstration of PM (or TSM), HCl, or mercury from unit, i, in units of pounds per million Btu of heat input. Determine the emission rate for PM (or TSM), HCl, or mercury by performance testing according to Table 5 to this subpart, or by fuel analysis for HCl or mercury or TSM according to Table 6 to this subpart.

Sa = Actual steam generation for that calendar month by boiler, i, in units of pounds.

Cfi = Conversion factor, as calculated during the most recent compliance test, in units of million Btu of heat input per pounds of steam generated for boiler, i.

1.1 = Required discount factor.

(3) Until 12 monthly weighted average emission rates have been accumulated, calculate and report only the average weighted emission rate determined under paragraph (f)(1) or (2) of this section for each calendar month. After 12 monthly weighted average emission rates have been accumulated, for each subsequent calendar month, use Equation 5 of this section to calculate the 12-month rolling average of the monthly weighted average emission rates for the current calendar month and the previous 11 calendar months.

$$Eavg = \sum_{i=1}^{n} ERi \div 12 \quad \text{(Eq. 5)}$$

Where:

Eavg = 12-month rolling average emission rate, (pounds per million Btu heat input)

ERi = Monthly weighted average, for calendar month “i” (pounds per million Btu heat input), as calculated by paragraph (f)(1) or (2) of this section.

(g) You must develop, and submit upon request to the applicable Administrator for review and approval, an implementation plan for emission averaging according to the following procedures and requirements in paragraphs (g)(1) through (4) of this section.

(1) You must submit the implementation plan no later than 180 days before the date that the facility intends to demonstrate compliance using the emission averaging option.

(2) You must include the information contained in paragraphs (g)(2)(i) through (vii) of this section in your implementation plan for all emission sources included in an emissions average:

(i) The identification of all existing boilers and process heaters in the averaging group, including for each either the applicable HAP emission level or the control technology installed as of January 31, 2013 and the date on which you are requesting emission averaging to commence;

(ii) The process parameter (heat input or steam generated) that will be monitored for each averaging group;

(iii) The specific control technology or pollution prevention measure to be used for each emission boiler or process heater in the averaging group and the date of its installation or application. If the pollution prevention measure reduces or eliminates emissions from multiple boilers or process heaters, the owner or operator must identify each boiler or process heater;

(iv) The test plan for the measurement of PM (or TSM), HCl, or mercury emissions in accordance with the requirements in § 63.7520;

(v) The operating parameters to be monitored for each control system or device consistent with § 63.7500 and Table 4, and a description of how the operating limits will be determined;

(vi) If you request to monitor an alternative operating parameter pursuant to § 63.7525, you must also include:

(A) A description of the parameter(s) to be monitored and an explanation of the criteria used to select the parameter(s); and

(B) A description of the methods and procedures that will be used to demonstrate that the parameter indicates proper operation of the control device; the frequency and content of monitoring, reporting, and recordkeeping requirements; and a demonstration, to the satisfaction of the Administrator, that the proposed monitoring frequency is sufficient to represent control device operating conditions; and

(vii) A demonstration that compliance with each of the applicable emission limit(s) will be achieved under representative operating load conditions. Following each compliance demonstration and until the next compliance demonstration, you must comply with the operating limit for operating load conditions specified in Table 4 to this subpart.

(3) The Administrator shall review and approve or disapprove the plan according to the following criteria:

(i) Whether the content of the plan includes all of the information specified in paragraph (g)(2) of this section; and

(ii) Whether the plan presents sufficient information to determine that compliance will be achieved and maintained.

(4) The applicable Administrator shall not approve an emission averaging implementation plan containing any of the following provisions:

(i) Any averaging between emissions of differing pollutants or between differing sources; or

(ii) The inclusion of any emission source other than an existing unit in the same subcategories.

(h) For a group of two or more existing affected units, each of which vents through a single common stack, you may average PM (or TSM), HCl, or mercury emissions to demonstrate compliance with the limits for that pollutant in Table 2 to this subpart if you satisfy the requirements in paragraph (i) or (j) of this section.

(i) For a group of two or more existing units in the same subcategories, each of which vents through a common emissions control system to a common stack, that does not receive emissions from units in other subcategories or categories, you may treat such averaging group as a single existing unit for purposes of this subpart and comply with the requirements of this subpart as if the group were a single unit.

(j) For all other groups of units subject to the common stack requirements of paragraph (h) of this section, including situations where the exhaust of affected units are each individually controlled and then sent to a common stack, the owner or operator may elect to:

(1) Conduct performance tests according to procedures specified in § 63.7520 in the common stack if affected units from other subcategories vent to the common stack. The emission limits that the group must comply with are determined by the use of Equation 6 of this section.

$$En = \sum_{i=1}^{n} (ELi \times Hi) \div \sum_{i=1}^{n} Hi \qquad \text{(Eq. 6)}$$

Where:

En = HAP emission limit, pounds per million British thermal units (lb/MMBtu), parts per million (ppm), or nanograms per dry standard cubic meter (ng/dscm).

ELi = Appropriate emission limit from Table 2 to this subpart for unit i, in units of lb/MMBtu, ppm or ng/dscm.

Hi = Heat input from unit i, MMBtu.

(2) Conduct performance tests according to procedures specified in § 63.7520 in the common stack. If affected units and non-affected units vent to the common stack, the non-affected units must be shut down or vented to a different stack during the performance test unless the facility determines to demonstrate compliance with the non-affected units venting to the stack; and

(3) Meet the applicable operating limit specified in § 63.7540 and Table 8 to this subpart for each emissions control system (except that, if each unit venting to the common stack has an applicable opacity operating limit, then a single continuous opacity monitoring system may be located in the common stack instead of in each duct to the common stack).

(k) The common stack of a group of two or more existing boilers or process heaters in the same subcategories subject to paragraph (h) of this section may be treated as a separate stack for purposes of paragraph (b) of this section and included in an emissions averaging group subject to paragraph (b) of this section.

[76 FR 15664, Mar. 21, 2011, as amended at 78 FR 7168, Jan. 31, 2013]

§ 63.7525 What are my monitoring, installation, operation, and maintenance requirements?

(a) If your boiler or process heater is subject to a CO emission limit in Tables 1, 2, or 11 through 13 to this subpart, you must install, operate, and maintain an oxygen analyzer system, as defined in § 63.7575, or install, certify, operate and maintain continuous emission monitoring systems for CO and oxygen according to the procedures in paragraphs (a)(1) through (7) of this section.

(1) Install the CO CEMS and oxygen analyzer by the compliance date specified in § 63.7495. The CO and oxygen levels shall be monitored at the same location at the outlet of the boiler or process heater.

(2) To demonstrate compliance with the applicable alternative CO CEMS emission standard listed in Tables 1, 2, or 11 through 13 to this subpart, you must install, certify, operate, and maintain a CO CEMS and an oxygen analyzer according to the applicable procedures under Performance Specification 4, 4A, or 4B at 40 CFR part 60, appendix B, the site-specific monitoring plan developed according to § 63.7505(d), and the requirements in § 63.7540(a)(8) and paragraph (a) of this section. Any boiler or process heater that has a CO CEMS that is compliant with Performance Specification 4, 4A, or 4B at 40 CFR part 60, appendix B, a site-specific monitoring plan developed according to § 63.7505(d), and the requirements in § 63.7540(a)(8) and paragraph (a) of this section must use the CO CEMS to comply with the applicable alternative CO CEMS emission standard listed in Tables 1, 2, or 11 through 13 to this subpart.

(i) You must conduct a performance evaluation of each CO CEMS according to the requirements in § 63.8(e) and according to Performance Specification 4, 4A, or 4B at 40 CFR part 60, appendix B.

(ii) During each relative accuracy test run of the CO CEMS, you must be collect emission data for CO concurrently (or within a 30- to 60-minute period) by both the CO CEMS and by Method 10, 10A, or 10B at 40 CFR part 60, appendix A-4. The relative accuracy testing must be at representative operating conditions.

(iii) You must follow the quality assurance procedures (e.g., quarterly accuracy determinations and daily calibration drift tests) of Procedure 1 of appendix F to part 60. The measurement span value of the CO CEMS must be two times the applicable CO emission limit, expressed as a concentration.

(iv) Any CO CEMS that does not comply with § 63.7525(a) cannot be used to meet any requirement in this subpart to demonstrate compliance with a CO emission limit listed in Tables 1, 2, or 11 through 13 to this subpart.

(v) For a new unit, complete the initial performance evaluation no later than July 30, 2013, or 180 days after the date of initial startup, whichever is later. For an existing unit, complete the initial performance evaluation no later than July 29, 2016.

(3) Complete a minimum of one cycle of CO and oxygen CEMS operation (sampling, analyzing, and data recording) for each successive 15-minute period. Collect CO and oxygen data concurrently. Collect at least four CO and oxygen CEMS data values representing the four 15-minute periods in an hour, or at least two 15-minute data values during an hour when CEMS calibration, quality assurance, or maintenance activities are being performed.

(4) Reduce the CO CEMS data as specified in § 63.8(g)(2).

(5) Calculate one-hour arithmetic averages, corrected to 3 percent oxygen from each hour of CO CEMS data in parts per million CO concentration. The one-hour arithmetic averages required shall be used to calculate the 30-day or 10-day rolling average emissions. Use Equation 19-19 in section 12.4.1 of Method 19 of 40 CFR part 60, appendix A-7 for calculating the average CO concentration from the hourly values.

(6) For purposes of collecting CO data, operate the CO CEMS as specified in § 63.7535(b). You must use all the data collected during all periods in calculating data averages and assessing compliance, except that you must exclude certain data as specified in § 63.7535(c). Periods when CO data are unavailable may constitute monitoring deviations as specified in § 63.7535(d).

(7) Operate an oxygen trim system with the oxygen level set no lower than the lowest hourly average oxygen concentration measured during the most recent CO performance test as the operating limit for oxygen according to Table 7 to this subpart.

(b) If your boiler or process heater is in the unit designed to burn coal/solid fossil fuel subcategory or the unit designed to burn heavy liquid subcategory and has an average annual heat input rate greater than 250 MMBtu per hour from solid fossil fuel and/or heavy liquid, and you demonstrate compliance with the PM limit instead of the alternative TSM limit, you must install, certify, maintain, and operate a PM CPMS monitoring emissions discharged to the atmosphere and record the output of the system as specified in paragraphs (b)(1) through (4) of this section. As an alternative to use of a PM CPMS to demonstrate compliance with the PM limit, you may choose to use a PM CEMS. If you choose to use a PM CEMS to demonstrate compliance with the PM limit instead of the alternative TSM limit, you must install, certify, maintain, and operate a PM CEMS monitoring emissions discharged to the atmosphere and record the output of the system as specified in paragraph (b)(5) through (8) of this section. For other boilers or process heaters, you may elect to use a PM CPMS or PM CEMS operated in accordance with this section in lieu of using other CMS for monitoring PM compliance (e.g., bag leak detectors, ESP secondary power, PM scrubber pressure). Owners of boilers and process heaters who elect to comply with the alternative TSM limit are not required to install a PM CPMS.

(1) Install, certify, operate, and maintain your PM CPMS according to the procedures in your approved site-specific monitoring plan developed in accordance with § 63.7505(d), the requirements in § 63.7540(a)(9), and paragraphs (b)(1)(i) through (iii) of this section.

(i) The operating principle of the PM CPMS must be based on in-stack or extractive light scatter, light scintillation, beta attenuation, or mass accumulation detection of PM in the exhaust gas or representative exhaust gas sample. The reportable measurement output from the PM CPMS must be expressed as milliamps.

(ii) The PM CPMS must have a cycle time (i.e., period required to complete sampling, measurement, and reporting for each measurement) no longer than 60 minutes.

(iii) The PM CPMS must be capable of detecting and responding to PM concentrations of no greater than 0.5 milligram per actual cubic meter.

(2) For a new unit, complete the initial performance evaluation no later than July 30, 2013, or 180 days after the date of initial startup, whichever is later. For an existing unit, complete the initial performance evaluation no later than July 29, 2016.

(3) Collect PM CPMS hourly average output data for all boiler or process heater operating hours except as indicated in § 63.7535(a) through (d). Express the PM CPMS output as milliamps.

(4) Calculate the arithmetic 30-day rolling average of all of the hourly average PM CPMS output data collected during all boiler or process heater operating hours (milliamps).

(5) Install, certify, operate, and maintain your PM CEMS according to the procedures in your approved site-specific monitoring plan developed in accordance with § 63.7505(d), the requirements in § 63.7540(a)(9), and paragraphs (b)(5)(i) through (iv) of this section.

(i) You shall conduct a performance evaluation of the PM CEMS according to the applicable requirements of § 60.8(e), and Performance Specification 11 at 40 CFR part 60, appendix B of this chapter.

(ii) During each PM correlation testing run of the CEMS required by Performance Specification 11 at 40 CFR part 60, appendix B of this chapter, you shall collect PM and oxygen (or carbon dioxide) data concurrently (or within a 30-to 60-minute period) by both the CEMS and conducting performance tests using Method 5 at 40 CFR part 60, appendix A-3 or Method 17 at 40 CFR part 60, appendix A-6 of this chapter.

(iii) You shall perform quarterly accuracy determinations and daily calibration drift tests in accordance with Procedure 2 at 40 CFR part 60, appendix F of this chapter. You must perform Relative Response Audits annually and perform Response Correlation Audits every 3 years.

(iv) Within 60 days after the date of completing each CEMS relative accuracy test audit or performance test conducted to demonstrate compliance with this subpart, you must submit the relative accuracy test audit data and performance test data to the EPA by successfully submitting the data electronically into the EPA's Central Data Exchange by using the Electronic Reporting Tool (see *http://www.epa.gov/ttn/chief/ert/erttool.html/*).

(6) For a new unit, complete the initial performance evaluation no later than July 30, 2013, or 180 days after the date of initial startup, whichever is later. For an existing unit, complete the initial performance evaluation no later than July 29, 2016.

(7) Collect PM CEMS hourly average output data for all boiler or process heater operating hours except as indicated in § 63.7535(a) through (d).

(8) Calculate the arithmetic 30-day rolling average of all of the hourly average PM CEMS output data collected during all boiler or process heater operating hours.

(c) If you have an applicable opacity operating limit in this rule, and are not otherwise required or elect to install and operate a PM CPMS, PM CEMS, or a bag leak detection system, you must install, operate, certify and maintain each COMS according to the procedures in paragraphs (c)(1) through (7) of this section by the compliance date specified in § 63.7495.

(1) Each COMS must be installed, operated, and maintained according to Performance Specification 1 at appendix B to part 60 of this chapter.

(2) You must conduct a performance evaluation of each COMS according to the requirements in § 63.8(e) and according to Performance Specification 1 at appendix B to part 60 of this chapter.

(3) As specified in § 63.8(c)(4)(i), each COMS must complete a minimum of one cycle of sampling and analyzing for each successive 10-second period and one cycle of data recording for each successive 6-minute period.

(4) The COMS data must be reduced as specified in § 63.8(g)(2).

(5) You must include in your site-specific monitoring plan procedures and acceptance criteria for operating and maintaining each COMS according to the requirements in § 63.8(d). At a minimum, the monitoring plan must include a daily calibration drift assessment, a quarterly performance audit, and an annual zero alignment audit of each COMS.

(6) You must operate and maintain each COMS according to the requirements in the monitoring plan and the requirements of § 63.8(e). You must identify periods the COMS is out of control including any periods that the COMS fails to pass a daily calibration drift assessment, a quarterly performance audit, or an annual zero alignment audit. Any 6-minute period for which the monitoring system is out of control and data are not available for a required calculation constitutes a deviation from the monitoring requirements.

(7) You must determine and record all the 6-minute averages (and daily block averages as applicable) collected for periods during which the COMS is not out of control.

(d) If you have an operating limit that requires the use of a CMS other than a PM CPMS or COMS, you must install, operate, and maintain each CMS according to the procedures in paragraphs (d)(1) through (5) of this section by the compliance date specified in § 63.7495.

(1) The CPMS must complete a minimum of one cycle of operation every 15-minutes. You must have a minimum of four successive cycles of operation, one representing each of the four 15-minute periods in an hour, to have a valid hour of data.

(2) You must operate the monitoring system as specified in § 63.7535(b), and comply with the data calculation requirements specified in § 63.7535(c).

(3) Any 15-minute period for which the monitoring system is out-of-control and data are not available for a required calculation constitutes a deviation from the monitoring requirements. Other situations that constitute a monitoring deviation are specified in § 63.7535(d).

(4) You must determine the 30-day rolling average of all recorded readings, except as provided in § 63.7535(c).

(5) You must record the results of each inspection, calibration, and validation check.

(e) If you have an operating limit that requires the use of a flow monitoring system, you must meet the requirements in paragraphs (d) and (e)(1) through (4) of this section.

(1) You must install the flow sensor and other necessary equipment in a position that provides a representative flow.

(2) You must use a flow sensor with a measurement sensitivity of no greater than 2 percent of the design flow rate.

(3) You must minimize, consistent with good engineering practices, the effects of swirling flow or abnormal velocity distributions due to upstream and downstream disturbances.

(4) You must conduct a flow monitoring system performance evaluation in accordance with your monitoring plan at the time of each performance test but no less frequently than annually.

(f) If you have an operating limit that requires the use of a pressure monitoring system, you must meet the requirements in paragraphs (d) and (f)(1) through (6) of this section.

(1) Install the pressure sensor(s) in a position that provides a representative measurement of the pressure (*e.g.* , PM scrubber pressure drop).

(2) Minimize or eliminate pulsating pressure, vibration, and internal and external corrosion consistent with good engineering practices.

(3) Use a pressure sensor with a minimum tolerance of 1.27 centimeters of water or a minimum tolerance of 1 percent of the pressure monitoring system operating range, whichever is less.

(4) Perform checks at least once each process operating day to ensure pressure measurements are not obstructed (*e.g.* , check for pressure tap pluggage daily).

(5) Conduct a performance evaluation of the pressure monitoring system in accordance with your monitoring plan at the time of each performance test but no less frequently than annually.

(6) If at any time the measured pressure exceeds the manufacturer's specified maximum operating pressure range, conduct a performance evaluation of the pressure monitoring system in accordance with your monitoring plan and confirm that the pressure monitoring system continues to meet the performance requirements in you monitoring plan. Alternatively, install and verify the operation of a new pressure sensor.

(g) If you have an operating limit that requires a pH monitoring system, you must meet the requirements in paragraphs (d) and (g)(1) through (4) of this section.

(1) Install the pH sensor in a position that provides a representative measurement of scrubber effluent pH.

(2) Ensure the sample is properly mixed and representative of the fluid to be measured.

(3) Conduct a performance evaluation of the pH monitoring system in accordance with your monitoring plan at least once each process operating day.

(4) Conduct a performance evaluation (including a two-point calibration with one of the two buffer solutions having a pH within 1 of the pH of the operating limit) of the pH monitoring system in accordance with your monitoring plan at the time of each performance test but no less frequently than quarterly.

(h) If you have an operating limit that requires a secondary electric power monitoring system for an electrostatic precipitator (ESP) operated with a wet scrubber, you must meet the requirements in paragraphs (h)(1) and (2) of this section.

(1) Install sensors to measure (secondary) voltage and current to the precipitator collection plates.

(2) Conduct a performance evaluation of the electric power monitoring system in accordance with your monitoring plan at the time of each performance test but no less frequently than annually.

(i) If you have an operating limit that requires the use of a monitoring system to measure sorbent injection rate (e.g., weigh belt, weigh hopper, or hopper flow measurement device), you must meet the requirements in paragraphs (d) and (i)(1) through (2) of this section.

(1) Install the system in a position(s) that provides a representative measurement of the total sorbent injection rate.

(2) Conduct a performance evaluation of the sorbent injection rate monitoring system in accordance with your monitoring plan at the time of each performance test but no less frequently than annually.

(j) If you are not required to use a PM CPMS and elect to use a fabric filter bag leak detection system to comply with the requirements of this subpart, you must install, calibrate, maintain, and continuously operate the bag leak detection system as specified in paragraphs (j)(1) through (6) of this section.

(1) You must install a bag leak detection sensor(s) in a position(s) that will be representative of the relative or absolute PM loadings for each exhaust stack, roof vent, or compartment (e.g., for a positive pressure fabric filter) of the fabric filter.

(2) Conduct a performance evaluation of the bag leak detection system in accordance with your monitoring plan and consistent with the guidance provided in EPA-454/R-98-015 (incorporated by reference, see § 63.14).

(3) Use a bag leak detection system certified by the manufacturer to be capable of detecting PM emissions at concentrations of 10 milligrams per actual cubic meter or less.

(4) Use a bag leak detection system equipped with a device to record continuously the output signal from the sensor.

(5) Use a bag leak detection system equipped with a system that will alert plant operating personnel when an increase in relative PM emissions over a preset level is detected. The alert must easily recognizable (e.g., heard or seen) by plant operating personnel.

(6) Where multiple bag leak detectors are required, the system's instrumentation and alert may be shared among detectors.

(k) For each unit that meets the definition of limited-use boiler or process heater, you must keep fuel use records for the days the boiler or process heater was operating.

(l) For each unit for which you decide to demonstrate compliance with the mercury or HCl emissions limits in Tables 1 or 2 or 11 through 13 of this subpart by use of a CEMS for mercury or HCl, you must install, certify, maintain, and operate a CEMS measuring emissions discharged to the atmosphere and record the output of the system as specified in paragraphs (l)(1) through (8) of this section. For HCl, this option for an affected unit takes effect on the date a final performance specification for a HCl CEMS is published in the FEDERAL REGISTER or the date of approval of a site-specific monitoring plan.

(1) Notify the Administrator one month before starting use of the CEMS, and notify the Administrator one month before stopping use of the CEMS.

(2) Each CEMS shall be installed, certified, operated, and maintained according to the requirements in § 63.7540(a)(14) for a mercury CEMS and § 63.7540(a)(15) for a HCl CEMS.

(3) For a new unit, you must complete the initial performance evaluation of the CEMS by the latest of the dates specified in paragraph (l)(3)(i) through (iii) of this section.

(i) No later than July 30, 2013.

(ii) No later 180 days after the date of initial startup.

(iii) No later 180 days after notifying the Administrator before starting to use the CEMS in place of performance testing or fuel analysis to demonstrate compliance.

(4) For an existing unit, you must complete the initial performance evaluation by the latter of the two dates specified in paragraph (l)(4)(i) and (ii) of this section.

(i) No later than July 29, 2016.

(ii) No later 180 days after notifying the Administrator before starting to use the CEMS in place of performance testing or fuel analysis to demonstrate compliance.

(5) Compliance with the applicable emissions limit shall be determined based on the 30-day rolling average of the hourly arithmetic average emissions rates using the continuous monitoring system outlet data. The 30-day rolling arithmetic average emission rate (lb/MMBtu) shall be calculated using the equations in EPA Reference Method 19 at 40 CFR part 60, appendix A-7, but substituting the mercury or HCl concentration for the pollutant concentrations normally used in Method 19.

(6) Collect CEMS hourly averages for all operating hours on a 30-day rolling average basis. Collect at least four CMS data values representing the four 15-minute periods in an hour, or at least two 15-minute data values during an hour when CMS calibration, quality assurance, or maintenance activities are being performed.

(7) The one-hour arithmetic averages required shall be expressed in lb/MMBtu and shall be used to calculate the boiler 30-day and 10-day rolling average emissions.

(8) You are allowed to substitute the use of the PM, mercury or HCl CEMS for the applicable fuel analysis, annual performance test, and operating limits specified in Table 4 to this subpart to demonstrate compliance with the PM, mercury or HCl emissions limit, and if you are using an acid gas wet scrubber or dry sorbent injection control technology to comply with the HCl emission limit, you are allowed to substitute the use of a sulfur dioxide (SO_2) CEMS for the applicable fuel analysis, annual performance test, and operating limits specified in Table 4 to this subpart to demonstrate compliance with HCl emissions limit.

(m) If your unit is subject to a HCl emission limit in Tables 1, 2, or 11 through 13 of this subpart and you have an acid gas wet scrubber or dry sorbent injection control technology and you use an SO_2 CEMS, you must install the monitor at the outlet of the boiler or process heater, downstream of all emission control devices, and you must install, certify, operate, and maintain the CEMS according to part 75 of this chapter.

(1) The SO_2 CEMS must be installed by the compliance date specified in § 63.7495.

(2) For on-going quality assurance (QA), the SO_2 CEMS must meet the applicable daily, quarterly, and semiannual or annual requirements in sections 2.1 through 2.3 of appendix B to part 75 of this chapter, with the following addition: You must perform the linearity checks required in section 2.2 of appendix B to part 75 of this chapter if the SO_2 CEMS has a span value of 30 ppm or less.

(3) For a new unit, the initial performance evaluation shall be completed no later than July 30, 2013, or 180 days after the date of initial startup, whichever is later. For an existing unit, the initial performance evaluation shall be completed no later than July 29, 2016.

(4) For purposes of collecting SO_2 data, you must operate the SO_2 CEMS as specified in § 63.7535(b). You must use all the data collected during all periods in calculating data averages and assessing compliance, except that you must exclude certain data as specified in § 63.7535(c). Periods when SO_2 data are unavailable may constitute monitoring deviations as specified in § 63.7535(d).

(5) Collect CEMS hourly averages for all operating hours on a 30-day rolling average basis.

(6) Use only unadjusted, quality-assured SO_2 concentration values in the emissions calculations; do not apply bias adjustment factors to the part 75 SO_2 data and do not use part 75 substitute data values.

[76 FR 15664, Mar. 21, 2011, as amended at 78 FR 7171, Jan. 31, 2013]

§ 63.7530 How do I demonstrate initial compliance with the emission limitations, fuel specifications and work practice standards?

(a) You must demonstrate initial compliance with each emission limit that applies to you by conducting initial performance tests and fuel analyses and establishing operating limits, as applicable, according to § 63.7520, paragraphs (b) and (c) of this section, and Tables 5 and 7 to this subpart. The requirement to conduct a fuel analysis is not applicable for units that burn a single type of fuel, as specified by § 63.7510(a)(2)(i). If applicable, you must also install, operate, and maintain all applicable CMS (including CEMS, COMS, and CPMS) according to § 63.7525.

(b) If you demonstrate compliance through performance testing, you must establish each site-specific operating limit in Table 4 to this subpart that applies to you according to the requirements in § 63.7520, Table 7 to this subpart, and paragraph (b)(4) of this section, as applicable. You must also conduct fuel analyses according to § 63.7521 and establish maximum fuel pollutant input levels according to paragraphs (b)(1) through (3) of this section, as applicable, and as specified in § 63.7510(a)(2). (Note that § 63.7510(a)(2) exempts certain fuels from the fuel analysis requirements.) However, if you switch fuel(s) and cannot show that the new fuel(s) does (do) not increase the

chlorine, mercury, or TSM input into the unit through the results of fuel analysis, then you must repeat the performance test to demonstrate compliance while burning the new fuel(s).

(1) You must establish the maximum chlorine fuel input (Clinput) during the initial fuel analysis according to the procedures in paragraphs (b)(1)(i) through (iii) of this section.

(i) You must determine the fuel type or fuel mixture that you could burn in your boiler or process heater that has the highest content of chlorine.

(ii) During the fuel analysis for hydrogen chloride, you must determine the fraction of the total heat input for each fuel type burned (Qi) based on the fuel mixture that has the highest content of chlorine, and the average chlorine concentration of each fuel type burned (Ci).

(iii) You must establish a maximum chlorine input level using Equation 7 of this section.

$$Clinput = \sum_{i=1}^{n} (Ci \times Qi) \quad \text{(Eq. 7)}$$

Where:

Clinput = Maximum amount of chlorine entering the boiler or process heater through fuels burned in units of pounds per million Btu.

Ci = Arithmetic average concentration of chlorine in fuel type, i, analyzed according to § 63.7521, in units of pounds per million Btu.

Qi = Fraction of total heat input from fuel type, i, based on the fuel mixture that has the highest content of chlorine. If you do not burn multiple fuel types during the performance testing, it is not necessary to determine the value of this term. Insert a value of “1” for Qi.

n = Number of different fuel types burned in your boiler or process heater for the mixture that has the highest content of chlorine.

(2) You must establish the maximum mercury fuel input level (Mercuryinput) during the initial fuel analysis using the procedures in paragraphs (b)(2)(i) through (iii) of this section.

(i) You must determine the fuel type or fuel mixture that you could burn in your boiler or process heater that has the highest content of mercury.

(ii) During the compliance demonstration for mercury, you must determine the fraction of total heat input for each fuel burned (Qi) based on the fuel mixture that has the highest content of mercury, and the average mercury concentration of each fuel type burned (HGi).

(iii) You must establish a maximum mercury input level using Equation 8 of this section.

$$Mercuryinput = \sum_{i=1}^{n} (HGi \times Qi) \quad \text{(Eq. 8)}$$

Where:

Mercuryinput = Maximum amount of mercury entering the boiler or process heater through fuels burned in units of pounds per million Btu.

HGi = Arithmetic average concentration of mercury in fuel type, i, analyzed according to § 63.7521, in units of pounds per million Btu.

Qi = Fraction of total heat input from fuel type, i, based on the fuel mixture that has the highest mercury content. If you do not burn multiple fuel types during the performance test, it is not necessary to determine the value of this term. Insert a value of “1” for Qi.

n = Number of different fuel types burned in your boiler or process heater for the mixture that has the highest content of mercury.

(3) If you opt to comply with the alternative TSM limit, you must establish the maximum TSM fuel input (TSMinput) for solid or liquid fuels during the initial fuel analysis according to the procedures in paragraphs (b)(3)(i) through (iii) of this section.

(i) You must determine the fuel type or fuel mixture that you could burn in your boiler or process heater that has the highest content of TSM.

(ii) During the fuel analysis for TSM, you must determine the fraction of the total heat input for each fuel type burned (Qi) based on the fuel mixture that has the highest content of TSM, and the average TSM concentration of each fuel type burned (TSMi).

(iii) You must establish a maximum TSM input level using Equation 9 of this section.

$$TSMinput = \sum_{i=1}^{n} (TSMi \times Qi) \qquad \text{(Eq. 9)}$$

Where:

TSMinput = Maximum amount of TSM entering the boiler or process heater through fuels burned in units of pounds per million Btu.

TSMi = Arithmetic average concentration of TSM in fuel type, i, analyzed according to § 63.7521, in units of pounds per million Btu.

Qi = Fraction of total heat input from fuel type, i, based on the fuel mixture that has the highest content of TSM. If you do not burn multiple fuel types during the performance testing, it is not necessary to determine the value of this term. Insert a value of “1” for Qi.

n = Number of different fuel types burned in your boiler or process heater for the mixture that has the highest content of TSM.

(4) You must establish parameter operating limits according to paragraphs (b)(4)(i) through (ix) of this section. As indicated in Table 4 to this subpart, you are not required to establish and comply with the operating parameter limits when you are using a CEMS to monitor and demonstrate compliance with the applicable emission limit for that control device parameter.

(i) For a wet acid gas scrubber, you must establish the minimum scrubber effluent pH and liquid flow rate as defined in § 63.7575, as your operating limits during the performance test during which you demonstrate compliance with your applicable limit. If you use a wet scrubber and you conduct separate performance tests for HCl and mercury emissions, you must establish one set of minimum scrubber effluent pH, liquid flow rate, and pressure drop operating limits. The minimum scrubber effluent pH operating limit must be established during the HCl performance test. If you conduct multiple performance tests, you must set the minimum liquid flow rate operating limit at the higher of the minimum values established during the performance tests.

(ii) For any particulate control device (e.g., ESP, particulate wet scrubber, fabric filter) for which you use a PM CPMS, you must establish your PM CPMS operating limit and determine compliance with it according to paragraphs (b)(4)(ii)(A) through (F) of this section.

(A) Determine your operating limit as the average PM CPMS output value recorded during the most recent performance test run demonstrating compliance with the filterable PM emission limit or at the PM CPMS output value

corresponding to 75 percent of the emission limit if your PM performance test demonstrates compliance below 75 percent of the emission limit. You must verify an existing or establish a new operating limit after each repeated performance test. You must repeat the performance test annually and reassess and adjust the site-specific operating limit in accordance with the results of the performance test.

(*1*) Your PM CPMS must provide a 4-20 milliamp output and the establishment of its relationship to manual reference method measurements must be determined in units of milliamps.

(*2*) Your PM CPMS operating range must be capable of reading PM concentrations from zero to a level equivalent to at least two times your allowable emission limit. If your PM CPMS is an auto-ranging instrument capable of multiple scales, the primary range of the instrument must be capable of reading PM concentration from zero to a level equivalent to two times your allowable emission limit.

(*3*) During the initial performance test or any such subsequent performance test that demonstrates compliance with the PM limit, record and average all milliamp output values from the PM CPMS for the periods corresponding to the compliance test runs (e.g., average all your PM CPMS output values for three corresponding 2-hour Method 5I test runs).

(B) If the average of your three PM performance test runs are below 75 percent of your PM emission limit, you must calculate an operating limit by establishing a relationship of PM CPMS signal to PM concentration using the PM CPMS instrument zero, the average PM CPMS values corresponding to the three compliance test runs, and the average PM concentration from the Method 5 or performance test with the procedures in paragraphs (b)(4)(ii)(B)(*1*) through (*4*) of this section.

(*1*) Determine your instrument zero output with one of the following procedures:

(*i*) Zero point data for *in-situ* instruments should be obtained by removing the instrument from the stack and monitoring ambient air on a test bench.

(*ii*) Zero point data for *extractive* instruments should be obtained by removing the extractive probe from the stack and drawing in clean ambient air.

(*iii*) The zero point may also be established by performing manual reference method measurements when the flue gas is free of PM emissions or contains very low PM concentrations (e.g., when your process is not operating, but the fans are operating or your source is combusting only natural gas) and plotting these with the compliance data to find the zero intercept.

(*iv*) If none of the steps in paragraphs (b)(4)(ii)(B)(*1*)(*i*) through (*iii*) of this section are possible, you must use a zero output value provided by the manufacturer.

(*2*) Determine your PM CPMS instrument average in milliamps, and the average of your corresponding three PM compliance test runs, using equation 10.

$$\bar{X} = \frac{1}{n}\sum_{i=1}^{n} X_1 ; \bar{Y} = \frac{1}{n}\sum_{i=1}^{n} Y_1 \qquad \text{(Eq. 10)}$$

Where:

X_1 = the PM CPMS data points for the three runs constituting the performance test,

Y_1 = the PM concentration value for the three runs constituting the performance test, and

n = the number of data points.

(*3*) With your instrument zero expressed in milliamps, your three run average PM CPMS milliamp value, and your three run average PM concentration from your three compliance tests, determine a relationship of lb/MMBtu per milliamp with equation 11.

$$R = \frac{Y_1}{(X_1 - z)} \qquad \text{(Eq. 11)}$$

Where:

R = the relative lb/MMBtu per milliamp for your PM CPMS,

Y_1 = the three run average lb/MMBtu PM concentration,

X_1 = the three run average milliamp output from you PM CPMS, and

z = the milliamp equivalent of your instrument zero determined from (B)(i).

(*4*) Determine your source specific 30-day rolling average operating limit using the lb/MMBtu per milliamp value from Equation 11 in equation 12, below. This sets your operating limit at the PM CPMS output value corresponding to 75 percent of your emission limit.

$$O_l = z + \frac{0.75(L)}{R} \qquad \text{(Eq. 12)}$$

Where:

O_l = the operating limit for your PM CPMS on a 30-day rolling average, in milliamps.

L = your source emission limit expressed in lb/MMBtu,

z = your instrument zero in milliamps, determined from (B)(i), and

R = the relative lb/MMBtu per milliamp for your PM CPMS, from Equation 11.

(C) If the average of your three PM compliance test runs is at or above 75 percent of your PM emission limit you must determine your 30-day rolling average operating limit by averaging the PM CPMS milliamp output corresponding to your three PM performance test runs that demonstrate compliance with the emission limit using equation 13 and you must submit all compliance test and PM CPMS data according to the reporting requirements in paragraph (b)(4)(ii)(F) of this section.

$$O_h = \frac{1}{n}\sum_{i=1}^{n} X_1 \qquad \text{(Eq. 13)}$$

Where:

X_1 = the PM CPMS data points for all runs i,

n = the number of data points, and

O_h = your site specific operating limit, in milliamps.

(D) To determine continuous compliance, you must record the PM CPMS output data for all periods when the process is operating and the PM CPMS is not out-of-control. You must demonstrate continuous compliance by using all quality-assured hourly average data collected by the PM CPMS for all operating hours to calculate the arithmetic

average operating parameter in units of the operating limit (milliamps) on a 30-day rolling average basis, updated at the end of each new operating hour. Use Equation 14 to determine the 30-day rolling average.

$$30-\text{day} = \frac{\sum_{i=1}^{n} Hpv}{n} \qquad \text{(Eq. 14)}$$

Where:

30-day = 30-day average.

Hpvi = is the hourly parameter value for hour i

n = is the number of valid hourly parameter values collected over the previous 720 operating hours.

(E) Use EPA Method 5 of appendix A to part 60 of this chapter to determine PM emissions. For each performance test, conduct three separate runs under the conditions that exist when the affected source is operating at the highest load or capacity level reasonably expected to occur. Conduct each test run to collect a minimum sample volume specified in Tables 1, 2, or 11 through 13 to this subpart, as applicable, for determining compliance with a new source limit or an existing source limit. Calculate the average of the results from three runs to determine compliance. You need not determine the PM collected in the impingers ("back half") of the Method 5 particulate sampling train to demonstrate compliance with the PM standards of this subpart. This shall not preclude the permitting authority from requiring a determination of the "back half" for other purposes.

(F) For PM performance test reports used to set a PM CPMS operating limit, the electronic submission of the test report must also include the make and model of the PM CPMS instrument, serial number of the instrument, analytical principle of the instrument (e.g. beta attenuation), span of the instruments primary analytical range, milliamp value equivalent to the instrument zero output, technique by which this zero value was determined, and the average milliamp signals corresponding to each PM compliance test run. (iii) For a particulate wet scrubber, you must establish the minimum pressure drop and liquid flow rate as defined in § 63.7575, as your operating limits during the three-run performance test during which you demonstrate compliance with your applicable limit. If you use a wet scrubber and you conduct separate performance tests for PM and TSM emissions, you must establish one set of minimum scrubber liquid flow rate and pressure drop operating limits. The minimum scrubber effluent pH operating limit must be established during the HCl performance test. If you conduct multiple performance tests, you must set the minimum liquid flow rate and pressure drop operating limits at the higher of the minimum values established during the performance tests.

(iii) For an electrostatic precipitator (ESP) operated with a wet scrubber, you must establish the minimum total secondary electric power input, as defined in § 63.7575, as your operating limit during the three-run performance test during which you demonstrate compliance with your applicable limit. (These operating limits do not apply to ESP that are operated as dry controls without a wet scrubber.)

(iv) For a dry scrubber, you must establish the minimum sorbent injection rate for each sorbent, as defined in § 63.7575, as your operating limit during the three-run performance test during which you demonstrate compliance with your applicable limit.

(v) For activated carbon injection, you must establish the minimum activated carbon injection rate, as defined in § 63.7575, as your operating limit during the three-run performance test during which you demonstrate compliance with your applicable limit.

(vi) The operating limit for boilers or process heaters with fabric filters that demonstrate continuous compliance through bag leak detection systems is that a bag leak detection system be installed according to the requirements in § 63.7525, and that each fabric filter must be operated such that the bag leak detection system alert is not activated more than 5 percent of the operating time during a 6-month period.

(vii) For a minimum oxygen level, if you conduct multiple performance tests, you must set the minimum oxygen level at the lower of the minimum values established during the performance tests.

(viii) The operating limit for boilers or process heaters that demonstrate continuous compliance with the HCl emission limit using a SO_2 CEMS is to install and operate the SO_2 according to the requirements in § 63.7525(m) establish a maximum SO_2 emission rate equal to the highest hourly average SO_2 measurement during the most recent three-run performance test for HCl.

(c) If you elect to demonstrate compliance with an applicable emission limit through fuel analysis, you must conduct fuel analyses according to § 63.7521 and follow the procedures in paragraphs (c)(1) through (5) of this section.

(1) If you burn more than one fuel type, you must determine the fuel mixture you could burn in your boiler or process heater that would result in the maximum emission rates of the pollutants that you elect to demonstrate compliance through fuel analysis.

(2) You must determine the 90th percentile confidence level fuel pollutant concentration of the composite samples analyzed for each fuel type using the one-sided t-statistic test described in Equation 15 of this section.

$$P90 = mean + (SD \times t) \quad \text{(Eq. 15)}$$

Where:

P90 = 90th percentile confidence level pollutant concentration, in pounds per million Btu.

Mean = Arithmetic average of the fuel pollutant concentration in the fuel samples analyzed according to § 63.7521, in units of pounds per million Btu.

SD = Standard deviation of the mean of pollutant concentration in the fuel samples analyzed according to § 63.7521, in units of pounds per million Btu. SD is calculated as the sample standard deviation divided by the square root of the number of samples.

t = t distribution critical value for 90th percentile ($t_{0.1}$) probability for the appropriate degrees of freedom (number of samples minus one) as obtained from a t-Distribution Critical Value Table.

(3) To demonstrate compliance with the applicable emission limit for HCl, the HCl emission rate that you calculate for your boiler or process heater using Equation 16 of this section must not exceed the applicable emission limit for HCl.

$$HCl = \sum_{i=1}^{n} (Ci90 \times Qi \times 1.028) \quad \text{(Eq. 16)}$$

Where:

HCl = HCl emission rate from the boiler or process heater in units of pounds per million Btu.

Ci90 = 90th percentile confidence level concentration of chlorine in fuel type, i, in units of pounds per million Btu as calculated according to Equation 11 of this section.

Qi = Fraction of total heat input from fuel type, i, based on the fuel mixture that has the highest content of chlorine. If you do not burn multiple fuel types, it is not necessary to determine the value of this term. Insert a value of “1” for Qi.

n = Number of different fuel types burned in your boiler or process heater for the mixture that has the highest content of chlorine.

1.028 = Molecular weight ratio of HCl to chlorine.

(4) To demonstrate compliance with the applicable emission limit for mercury, the mercury emission rate that you calculate for your boiler or process heater using Equation 17 of this section must not exceed the applicable emission limit for mercury.

$$Mercury = \sum_{i=1}^{n} (Hgi90 \times Qi) \quad \text{(Eq. 17)}$$

Where:

Mercury = Mercury emission rate from the boiler or process heater in units of pounds per million Btu.

Hgi90 = 90th percentile confidence level concentration of mercury in fuel, i, in units of pounds per million Btu as calculated according to Equation 11 of this section.

Qi = Fraction of total heat input from fuel type, i, based on the fuel mixture that has the highest mercury content. If you do not burn multiple fuel types, it is not necessary to determine the value of this term. Insert a value of “1” for Qi.

n = Number of different fuel types burned in your boiler or process heater for the mixture that has the highest mercury content.

(5) To demonstrate compliance with the applicable emission limit for TSM for solid or liquid fuels, the TSM emission rate that you calculate for your boiler or process heater from solid fuels using Equation 18 of this section must not exceed the applicable emission limit for TSM.

$$Metals = \sum_{i=1}^{n} (TSM90i \times Qi) \quad \text{(Eq. 18)}$$

Where:

Metals = TSM emission rate from the boiler or process heater in units of pounds per million Btu.

TSMi90 = 90th percentile confidence level concentration of TSM in fuel, i, in units of pounds per million Btu as calculated according to Equation 11 of this section.

Qi = Fraction of total heat input from fuel type, i, based on the fuel mixture that has the highest TSM content. If you do not burn multiple fuel types, it is not necessary to determine the value of this term. Insert a value of “1” for Qi.

n = Number of different fuel types burned in your boiler or process heater for the mixture that has the highest TSM content.

(d) If you own or operate an existing unit with a heat input capacity of less than 10 million Btu per hour or a unit in the unit designed to burn gas 1 subcategory, you must submit a signed statement in the Notification of Compliance Status report that indicates that you conducted a tune-up of the unit.

(e) You must include with the Notification of Compliance Status a signed certification that the energy assessment was completed according to Table 3 to this subpart and is an accurate depiction of your facility at the time of the assessment.

(f) You must submit the Notification of Compliance Status containing the results of the initial compliance demonstration according to the requirements in § 63.7545(e).

(g) If you elect to demonstrate that a gaseous fuel meets the specifications of another gas 1 fuel as defined in § 63.7575, you must conduct an initial fuel specification analyses according to § 63.7521(f) through (i) and according to the frequency listed in § 63.7540(c) and maintain records of the results of the testing as outlined in § 63.7555(g). For samples where the initial mercury specification has not been exceeded, you will include a signed certification with the Notification of Compliance Status that the initial fuel specification test meets the gas specification outlined in the definition of other gas 1 fuels.

(h) If you own or operate a unit subject to emission limits in Tables 1 or 2 or 11 through 13 to this subpart, you must meet the work practice standard according to Table 3 of this subpart. During startup and shutdown, you must only follow the work practice standards according to item 5 of Table 3 of this subpart.

(i) If you opt to comply with the alternative SO_2 CEMS operating limit in Tables 4 and 8 to this subpart, you may do so only if your affected boiler or process heater:

(1) Has a system using wet scrubber or dry sorbent injection and SO_2 CEMS installed on the unit; and

(2) At all times, you operate the wet scrubber or dry sorbent injection for acid gas control on the unit consistent with § 63.7500(a)(3); and

(3) You establish a unit-specific maximum SO_2 operating limit by collecting the minimum hourly SO_2 emission rate on the SO_2 CEMS during the paired 3-run test for HCl. The maximum SO_2 operating limit is equal to the highest hourly average SO_2 concentration measured during the most recent HCl performance test.

[76 FR 15664, Mar. 21, 2011, as amended at 78 FR 7174, Jan. 31, 2013]

§ 63.7533 Can I use efficiency credits earned from implementation of energy conservation measures to comply with this subpart?

(a) If you elect to comply with the alternative equivalent output-based emission limits, instead of the heat input-based limits listed in Table 2 to this subpart, and you want to take credit for implementing energy conservation measures identified in an energy assessment, you may demonstrate compliance using efficiency credits according to the procedures in this section. You may use this compliance approach for an existing affected boiler for demonstrating initial compliance according to § 63.7522(e) and for demonstrating monthly compliance according to § 63.7522(f). Owners or operators using this compliance approach must establish an emissions benchmark, calculate and document the efficiency credits, develop an Implementation Plan, comply with the general reporting requirements, and apply the efficiency credit according to the procedures in paragraphs (b) through (f) of this section. You cannot use this compliance approach for a new or reconstructed affected boiler. Additional guidance from the Department of Energy on efficiency credits is available at: *http://www.epa.gov/ttn/atw/boiler/boilerpg.html* .

(b) For each existing affected boiler for which you intend to apply emissions credits, establish a benchmark from which emission reduction credits may be generated by determining the actual annual fuel heat input to the affected boiler before initiation of an energy conservation activity to reduce energy demand (*i.e.,* fuel usage) according to paragraphs (b)(1) through (4) of this section. The benchmark shall be expressed in trillion Btu per year heat input.

(1) The benchmark from which efficiency credits may be generated shall be determined by using the most representative, accurate, and reliable process available for the source. The benchmark shall be established for a one-year period before the date that an energy demand reduction occurs, unless it can be demonstrated that a different time period is more representative of historical operations.

(2) Determine the starting point from which to measure progress. Inventory all fuel purchased and generated on-site (off-gases, residues) in physical units (MMBtu, million cubic feet, etc.).

(3) Document all uses of energy from the affected boiler. Use the most recent data available.

(4) Collect non-energy related facility and operational data to normalize, if necessary, the benchmark to current operations, such as building size, operating hours, etc. If possible, use actual data that are current and timely rather than estimated data.

(c) Efficiency credits can be generated if the energy conservation measures were implemented after January 1, 2008 and if sufficient information is available to determine the appropriate value of credits.

(1) The following emission points cannot be used to generate efficiency credits:

(i) Energy conservation measures implemented on or before January 1, 2008, unless the level of energy demand reduction is increased after January 1, 2008, in which case credit will be allowed only for change in demand reduction achieved after January 1, 2008.

(ii) Efficiency credits on shut-down boilers. Boilers that are shut down cannot be used to generate credits unless the facility provides documentation linking the permanent shutdown to energy conservation measures identified in the energy assessment. In this case, the bench established for the affected boiler to which the credits from the shutdown will be applied must be revised to include the benchmark established for the shutdown boiler.

(2) For all points included in calculating emissions credits, the owner or operator shall:

(i) Calculate annual credits for all energy demand points. Use Equation 19 to calculate credits. Energy conservation measures that meet the criteria of paragraph (c)(1) of this section shall not be included, except as specified in paragraph (c)(1)(i) of this section.

(3) Credits are generated by the difference between the benchmark that is established for each affected boiler, and the actual energy demand reductions from energy conservation measures implemented after January 1, 2008. Credits shall be calculated using Equation 19 of this section as follows:

(i) The overall equation for calculating credits is:

$$ECredits = \left(\sum_{i=1}^{n} EIS_{iactual} \right) \div EI_{baseline} \quad \text{(Eq. 19)}$$

Where:

ECredits = Energy Input Savings for all energy conservation measures implemented for an affected boiler, expressed as a decimal fraction of the baseline energy input.

$EIS_{iactual}$ = Energy Input Savings for each energy conservation measure, i, implemented for an affected boiler, million Btu per year.

$EI_{baseline}$ = Energy Input baseline for the affected boiler, million Btu per year.

n = Number of energy conservation measures included in the efficiency credit for the affected boiler.

(ii) [Reserved]

(d) The owner or operator shall develop, and submit for approval upon request by the Administrator, an Implementation Plan containing all of the information required in this paragraph for all boilers to be included in an efficiency credit approach. The Implementation Plan shall identify all existing affected boilers to be included in applying the efficiency credits. The Implementation Plan shall include a description of the energy conservation measures implemented and the energy savings generated from each measure and an explanation of the criteria used for determining that savings. If requested, you must submit the implementation plan for efficiency credits to the Administrator for review and approval no later than 180 days before the date on which the facility intends to demonstrate compliance using the efficiency credit approach.

(e) The emissions rate as calculated using Equation 20 of this section from each existing boiler participating in the efficiency credit option must be in compliance with the limits in Table 2 to this subpart at all times the affected unit is operating, following the compliance date specified in § 63.7495.

(f) You must use Equation 20 of this section to demonstrate initial compliance by demonstrating that the emissions from the affected boiler participating in the efficiency credit compliance approach do not exceed the emission limits in Table 2 to this subpart.

$$E_{adj} = E_{m} \times (1 - ECredits) \quad \text{(Eq. 20)}$$

Where:

E_{adj} = Emission level adjusted by applying the efficiency credits earned, lb per million Btu steam output (or lb per MWh) for the affected boiler.

E_m = Emissions measured during the performance test, lb per million Btu steam output (or lb per MWh) for the affected boiler.

ECredits = Efficiency credits from Equation 19 for the affected boiler.

(g) As part of each compliance report submitted as required under § 63.7550, you must include documentation that the energy conservation measures implemented continue to generate the credit for use in demonstrating compliance with the emission limits.

[76 FR 15664, Mar. 21, 2011, as amended at 78 FR 7178, Jan. 31, 2013]

Continuous Compliance Requirements

§ 63.7535 Is there a minimum amount of monitoring data I must obtain?

(a) You must monitor and collect data according to this section and the site-specific monitoring plan required by § 63.7505(d).

(b) You must operate the monitoring system and collect data at all required intervals at all times that each boiler or process heater is operating and compliance is required, except for periods of monitoring system malfunctions or out of control periods (see § 63.8(c)(7) of this part), and required monitoring system quality assurance or control activities, including, as applicable, calibration checks, required zero and span adjustments, and scheduled CMS maintenance as defined in your site-specific monitoring plan. A monitoring system malfunction is any sudden, infrequent, not reasonably preventable failure of the monitoring system to provide valid data. Monitoring system failures that are caused in part by poor maintenance or careless operation are not malfunctions. You are required to complete monitoring system repairs in response to monitoring system malfunctions or out-of-control periods and to return the monitoring system to operation as expeditiously as practicable.

(c) You may not use data recorded during monitoring system malfunctions or out-of-control periods, repairs associated with monitoring system malfunctions or out-of-control periods, or required monitoring system quality assurance or control activities in data averages and calculations used to report emissions or operating levels. You must record and make available upon request results of CMS performance audits and dates and duration of periods when the CMS is out of control to completion of the corrective actions necessary to return the CMS to operation consistent with your site-specific monitoring plan. You must use all the data collected during all other periods in assessing compliance and the operation of the control device and associated control system.

(d) Except for periods of monitoring system malfunctions, repairs associated with monitoring system malfunctions, and required monitoring system quality assurance or quality control activities (including, as applicable, system accuracy audits, calibration checks, and required zero and span adjustments), failure to collect required data is a deviation of the monitoring requirements. In calculating monitoring results, do not use any data collected during periods when the monitoring system is out of control as specified in your site-specific monitoring plan, while conducting repairs associated with periods when the monitoring system is out of control, or while conducting required monitoring system quality assurance or quality control activities. You must calculate monitoring results using all other monitoring data collected while the process is operating. You must report all periods when the monitoring system is out of control in your annual report.

[76 FR 15664, Mar. 21, 2011, as amended at 78 FR 7179, Jan. 31, 2013]

§ 63.7540 How do I demonstrate continuous compliance with the emission limitations, fuel specifications and work practice standards?

(a) You must demonstrate continuous compliance with each emission limit in Tables 1 and 2 or 11 through 13 to this subpart, the work practice standards in Table 3 to this subpart, and the operating limits in Table 4 to this subpart that applies to you according to the methods specified in Table 8 to this subpart and paragraphs (a)(1) through (19) of this section.

(1) Following the date on which the initial compliance demonstration is completed or is required to be completed under §§ 63.7 and 63.7510, whichever date comes first, operation above the established maximum or below the established minimum operating limits shall constitute a deviation of established operating limits listed in Table 4 of this subpart except during performance tests conducted to determine compliance with the emission limits or to establish new operating limits. Operating limits must be confirmed or reestablished during performance tests.

(2) As specified in § 63.7550(c), you must keep records of the type and amount of all fuels burned in each boiler or process heater during the reporting period to demonstrate that all fuel types and mixtures of fuels burned would result in either of the following:

(i) Lower emissions of HCl, mercury, and TSM than the applicable emission limit for each pollutant, if you demonstrate compliance through fuel analysis.

(ii) Lower fuel input of chlorine, mercury, and TSM than the maximum values calculated during the last performance test, if you demonstrate compliance through performance testing.

(3) If you demonstrate compliance with an applicable HCl emission limit through fuel analysis for a solid or liquid fuel and you plan to burn a new type of solid or liquid fuel, you must recalculate the HCl emission rate using Equation 12 of § 63.7530 according to paragraphs (a)(3)(i) through (iii) of this section. You are not required to conduct fuel analyses for the fuels described in § 63.7510(a)(2)(i) through (iii). You may exclude the fuels described in § 63.7510(a)(2)(i) through (iii) when recalculating the HCl emission rate.

(i) You must determine the chlorine concentration for any new fuel type in units of pounds per million Btu, based on supplier data or your own fuel analysis, according to the provisions in your site-specific fuel analysis plan developed according to § 63.7521(b).

(ii) You must determine the new mixture of fuels that will have the highest content of chlorine.

(iii) Recalculate the HCl emission rate from your boiler or process heater under these new conditions using Equation 12 of § 63.7530. The recalculated HCl emission rate must be less than the applicable emission limit.

(4) If you demonstrate compliance with an applicable HCl emission limit through performance testing and you plan to burn a new type of fuel or a new mixture of fuels, you must recalculate the maximum chlorine input using Equation 7 of § 63.7530. If the results of recalculating the maximum chlorine input using Equation 7 of § 63.7530 are greater than the maximum chlorine input level established during the previous performance test, then you must conduct a new performance test within 60 days of burning the new fuel type or fuel mixture according to the procedures in § 63.7520 to demonstrate that the HCl emissions do not exceed the emission limit. You must also establish new operating limits based on this performance test according to the procedures in § 63.7530(b). In recalculating the maximum chlorine input and establishing the new operating limits, you are not required to conduct fuel analyses for and include the fuels described in § 63.7510(a)(2)(i) through (iii).

(5) If you demonstrate compliance with an applicable mercury emission limit through fuel analysis, and you plan to burn a new type of fuel, you must recalculate the mercury emission rate using Equation 13 of § 63.7530 according to the procedures specified in paragraphs (a)(5)(i) through (iii) of this section. You are not required to conduct fuel analyses for the fuels described in § 63.7510(a)(2)(i) through (iii). You may exclude the fuels described in § 63.7510(a)(2)(i) through (iii) when recalculating the mercury emission rate.

(i) You must determine the mercury concentration for any new fuel type in units of pounds per million Btu, based on supplier data or your own fuel analysis, according to the provisions in your site-specific fuel analysis plan developed according to § 63.7521(b).

(ii) You must determine the new mixture of fuels that will have the highest content of mercury.

(iii) Recalculate the mercury emission rate from your boiler or process heater under these new conditions using Equation 13 of § 63.7530. The recalculated mercury emission rate must be less than the applicable emission limit.

(6) If you demonstrate compliance with an applicable mercury emission limit through performance testing, and you plan to burn a new type of fuel or a new mixture of fuels, you must recalculate the maximum mercury input using Equation 8 of § 63.7530. If the results of recalculating the maximum mercury input using Equation 8 of § 63.7530 are higher than the maximum mercury input level established during the previous performance test, then you must conduct a new performance test within 60 days of burning the new fuel type or fuel mixture according to the procedures in § 63.7520 to demonstrate that the mercury emissions do not exceed the emission limit. You must also establish new operating limits based on this performance test according to the procedures in § 63.7530(b). You are not required to conduct fuel analyses for the fuels described in § 63.7510(a)(2)(i) through (iii). You may exclude the fuels described in § 63.7510(a)(2)(i) through (iii) when recalculating the mercury emission rate.

(7) If your unit is controlled with a fabric filter, and you demonstrate continuous compliance using a bag leak detection system, you must initiate corrective action within 1 hour of a bag leak detection system alert and complete corrective actions as soon as practical, and operate and maintain the fabric filter system such that the periods which would cause an alert are no more than 5 percent of the operating time during a 6-month period. You must also keep records of the date, time, and duration of each alert, the time corrective action was initiated and completed, and a brief description of the cause of the alert and the corrective action taken. You must also record the percent of the operating time during each 6-month period that the conditions exist for an alert. In calculating this operating time percentage, if inspection of the fabric filter demonstrates that no corrective action is required, no alert time is counted. If corrective action is required, each alert shall be counted as a minimum of 1 hour. If you take longer than 1 hour to initiate corrective action, the alert time shall be counted as the actual amount of time taken to initiate corrective action.

(8) To demonstrate compliance with the applicable alternative CO CEMS emission limit listed in Tables 1, 2, or 11 through 13 to this subpart, you must meet the requirements in paragraphs (a)(8)(i) through (iv) of this section.

(i) Continuously monitor CO according to §§ 63.7525(a) and 63.7535.

(ii) Maintain a CO emission level below or at your applicable alternative CO CEMS-based standard in Tables 1 or 2 or 11 through 13 to this subpart at all times the affected unit is operating.

(iii) Keep records of CO levels according to § 63.7555(b).

(iv) You must record and make available upon request results of CO CEMS performance audits, dates and duration of periods when the CO CEMS is out of control to completion of the corrective actions necessary to return the CO CEMS to operation consistent with your site-specific monitoring plan.

(9) The owner or operator of a boiler or process heater using a PM CPMS or a PM CEMS to meet requirements of this subpart shall install, certify, operate, and maintain the PM CPMS or PM CEMS in accordance with your site-specific monitoring plan as required in § 63.7505(d).

(10) If your boiler or process heater has a heat input capacity of 10 million Btu per hour or greater, you must conduct an annual tune-up of the boiler or process heater to demonstrate continuous compliance as specified in paragraphs (a)(10)(i) through (vi) of this section. This frequency does not apply to limited-use boilers and process heaters, as defined in § 63.7575, or units with continuous oxygen trim systems that maintain an optimum air to fuel ratio.

(i) As applicable, inspect the burner, and clean or replace any components of the burner as necessary (you may delay the burner inspection until the next scheduled unit shutdown). Units that produce electricity for sale may delay the burner inspection until the first outage, not to exceed 36 months from the previous inspection. At units where entry into a piece of process equipment or into a storage vessel is required to complete the tune-up inspections, inspections are required only during planned entries into the storage vessel or process equipment;

(ii) Inspect the flame pattern, as applicable, and adjust the burner as necessary to optimize the flame pattern. The adjustment should be consistent with the manufacturer's specifications, if available;

(iii) Inspect the system controlling the air-to-fuel ratio, as applicable, and ensure that it is correctly calibrated and functioning properly (you may delay the inspection until the next scheduled unit shutdown). Units that produce electricity for sale may delay the inspection until the first outage, not to exceed 36 months from the previous inspection;

(iv) Optimize total emissions of CO. This optimization should be consistent with the manufacturer's specifications, if available, and with any NO_X requirement to which the unit is subject;

(v) Measure the concentrations in the effluent stream of CO in parts per million, by volume, and oxygen in volume percent, before and after the adjustments are made (measurements may be either on a dry or wet basis, as long as it is the same basis before and after the adjustments are made). Measurements may be taken using a portable CO analyzer; and

(vi) Maintain on-site and submit, if requested by the Administrator, an annual report containing the information in paragraphs (a)(10)(vi)(A) through (C) of this section,

(A) The concentrations of CO in the effluent stream in parts per million by volume, and oxygen in volume percent, measured at high fire or typical operating load, before and after the tune-up of the boiler or process heater;

(B) A description of any corrective actions taken as a part of the tune-up; and

(C) The type and amount of fuel used over the 12 months prior to the tune-up, but only if the unit was physically and legally capable of using more than one type of fuel during that period. Units sharing a fuel meter may estimate the fuel used by each unit.

(11) If your boiler or process heater has a heat input capacity of less than 10 million Btu per hour (except as specified in paragraph (a)(12) of this section), you must conduct a biennial tune-up of the boiler or process heater as specified in paragraphs (a)(10)(i) through (vi) of this section to demonstrate continuous compliance.

(12) If your boiler or process heater has a continuous oxygen trim system that maintains an optimum air to fuel ratio, or a heat input capacity of less than or equal to 5 million Btu per hour and the unit is in the units designed to burn gas 1; units designed to burn gas 2 (other); or units designed to burn light liquid subcategories, or meets the definition of limited-use boiler or process heater in § 63.7575, you must conduct a tune-up of the boiler or process heater every 5 years as specified in paragraphs (a)(10)(i) through (vi) of this section to demonstrate continuous compliance. You may delay the burner inspection specified in paragraph (a)(10)(i) of this section until the next scheduled or unscheduled unit shutdown, but you must inspect each burner at least once every 72 months.

(13) If the unit is not operating on the required date for a tune-up, the tune-up must be conducted within 30 calendar days of startup.

(14) If you are using a CEMS measuring mercury emissions to meet requirements of this subpart you must install, certify, operate, and maintain the mercury CEMS as specified in paragraphs (a)(14)(i) and (ii) of this section.

(i) Operate the mercury CEMS in accordance with performance specification 12A of 40 CFR part 60, appendix B or operate a sorbent trap based integrated monitor in accordance with performance specification 12B of 40 CFR part 60, appendix B. The duration of the performance test must be the maximum of 30 unit operating days or 720 hours. For each day in which the unit operates, you must obtain hourly mercury concentration data, and stack gas volumetric flow rate data.

(ii) If you are using a mercury CEMS, you must install, operate, calibrate, and maintain an instrument for continuously measuring and recording the mercury mass emissions rate to the atmosphere according to the requirements of performance specifications 6 and 12A of 40 CFR part 60, appendix B, and quality assurance procedure 6 of 40 CFR part 60, appendix F.

(15) If you are using a CEMS to measure HCl emissions to meet requirements of this subpart, you must install, certify, operate, and maintain the HCl CEMS as specified in paragraphs (a)(15)(i) and (ii) of this section. This option for an affected unit takes effect on the date a final performance specification for an HCl CEMS is published in the FEDERAL REGISTER or the date of approval of a site-specific monitoring plan.

(i) Operate the continuous emissions monitoring system in accordance with the applicable performance specification in 40 CFR part 60, appendix B. The duration of the performance test must be the maximum of 30 unit operating days or 720 hours. For each day in which the unit operates, you must obtain hourly HCl concentration data, and stack gas volumetric flow rate data.

(ii) If you are using a HCl CEMS, you must install, operate, calibrate, and maintain an instrument for continuously measuring and recording the HCl mass emissions rate to the atmosphere according to the requirements of the applicable performance specification of 40 CFR part 60, appendix B, and the quality assurance procedures of 40 CFR part 60, appendix F.

(16) If you demonstrate compliance with an applicable TSM emission limit through performance testing, and you plan to burn a new type of fuel or a new mixture of fuels, you must recalculate the maximum TSM input using Equation 9 of § 63.7530. If the results of recalculating the maximum TSM input using Equation 9 of § 63.7530 are higher than the maximum total selected input level established during the previous performance test, then you must conduct a new performance test within 60 days of burning the new fuel type or fuel mixture according to the procedures in § 63.7520 to demonstrate that the TSM emissions do not exceed the emission limit. You must also establish new operating limits based on this performance test according to the procedures in § 63.7530(b). You are not required to conduct fuel analyses for the fuels described in § 63.7510(a)(2)(i) through (iii). You may exclude the fuels described in § 63.7510(a)(2)(i) through (iii) when recalculating the TSM emission rate.

(17) If you demonstrate compliance with an applicable TSM emission limit through fuel analysis for solid or liquid fuels, and you plan to burn a new type of fuel, you must recalculate the TSM emission rate using Equation 14 of § 63.7530 according to the procedures specified in paragraphs (a)(5)(i) through (iii) of this section. You are not required to conduct fuel analyses for the fuels described in § 63.7510(a)(2)(i) through (iii). You may exclude the fuels described in § 63.7510(a)(2)(i) through (iii) when recalculating the TSM emission rate.

(i) You must determine the TSM concentration for any new fuel type in units of pounds per million Btu, based on supplier data or your own fuel analysis, according to the provisions in your site-specific fuel analysis plan developed according to § 63.7521(b).

(ii) You must determine the new mixture of fuels that will have the highest content of TSM.

(iii) Recalculate the TSM emission rate from your boiler or process heater under these new conditions using Equation 14 of § 63.7530. The recalculated TSM emission rate must be less than the applicable emission limit.

(18) If you demonstrate continuous PM emissions compliance with a PM CPMS you will use a PM CPMS to establish a site-specific operating limit corresponding to the results of the performance test demonstrating compliance with the PM limit. You will conduct your performance test using the test method criteria in Table 5 of this subpart. You will use the PM CPMS to demonstrate continuous compliance with this operating limit. You must repeat the performance test annually and reassess and adjust the site-specific operating limit in accordance with the results of the performance test.

(i) To determine continuous compliance, you must record the PM CPMS output data for all periods when the process is operating and the PM CPMS is not out-of-control. You must demonstrate continuous compliance by using all quality-assured hourly average data collected by the PM CPMS for all operating hours to calculate the arithmetic average operating parameter in units of the operating limit (milliamps) on a 30-day rolling average basis, updated at the end of each new boiler or process heater operating hour.

(ii) For any deviation of the 30-day rolling PM CPMS average value from the established operating parameter limit, you must:

(A) Within 48 hours of the deviation, visually inspect the air pollution control device (APCD);

(B) If inspection of the APCD identifies the cause of the deviation, take corrective action as soon as possible and return the PM CPMS measurement to within the established value; and

(C) Within 30 days of the deviation or at the time of the annual compliance test, whichever comes first, conduct a PM emissions compliance test to determine compliance with the PM emissions limit and to verify or re-establish the

CPMS operating limit. You are not required to conduct additional testing for any deviations that occur between the time of the original deviation and the PM emissions compliance test required under this paragraph.

(iii) PM CPMS deviations from the operating limit leading to more than four required performance tests in a 12-month operating period constitute a separate violation of this subpart.

(19) If you choose to comply with the PM filterable emissions limit by using PM CEMS you must install, certify, operate, and maintain a PM CEMS and record the output of the PM CEMS as specified in paragraphs (a)(19)(i) through (vii) of this section. The compliance limit will be expressed as a 30-day rolling average of the numerical emissions limit value applicable for your unit in Tables 1 or 2 or 11 through 13 of this subpart.

(i) Install and certify your PM CEMS according to the procedures and requirements in Performance Specification 11— Specifications and Test Procedures for Particulate Matter Continuous Emission Monitoring Systems at Stationary Sources in Appendix B to part 60 of this chapter, using test criteria outlined in Table V of this rule. The reportable measurement output from the PM CEMS must be expressed in units of the applicable emissions limit (e.g., lb/MMBtu, lb/MWh).

(ii) Operate and maintain your PM CEMS according to the procedures and requirements in Procedure 2— Quality Assurance Requirements for Particulate Matter Continuous Emission Monitoring Systems at Stationary Sources in Appendix F to part 60 of this chapter.

(A) You must conduct the relative response audit (RRA) for your PM CEMS at least once annually.

(B) You must conduct the relative correlation audit (RCA) for your PM CEMS at least once every 3 years.

(iii) Collect PM CEMS hourly average output data for all boiler operating hours except as indicated in paragraph (i) of this section.

(iv) Calculate the arithmetic 30-day rolling average of all of the hourly average PM CEMS output data collected during all nonexempt boiler or process heater operating hours.

(v) You must collect data using the PM CEMS at all times the unit is operating and at the intervals specified this paragraph (a), except for periods of monitoring system malfunctions, repairs associated with monitoring system malfunctions, and required monitoring system quality assurance or quality control activities.

(vi) You must use all the data collected during all boiler or process heater operating hours in assessing the compliance with your operating limit except:

(A) Any data collected during monitoring system malfunctions, repairs associated with monitoring system malfunctions, or required monitoring system quality assurance or control activities conducted during monitoring system malfunctions in calculations and report any such periods in your annual deviation report;

(B) Any data collected during periods when the monitoring system is out of control as specified in your site-specific monitoring plan, repairs associated with periods when the monitoring system is out of control, or required monitoring system quality assurance or control activities conducted during out of control periods in calculations used to report emissions or operating levels and report any such periods in your annual deviation report;

(C) Any data recorded during periods of startup or shutdown.

(vii) You must record and make available upon request results of PM CEMS system performance audits, dates and duration of periods when the PM CEMS is out of control to completion of the corrective actions necessary to return the PM CEMS to operation consistent with your site-specific monitoring plan.

(b) You must report each instance in which you did not meet each emission limit and operating limit in Tables 1 through 4 or 11 through 13 to this subpart that apply to you. These instances are deviations from the emission limits or operating limits, respectively, in this subpart. These deviations must be reported according to the requirements in § 63.7550.

(c) If you elected to demonstrate that the unit meets the specification for mercury for the unit designed to burn gas 1 subcategory, you must follow the sampling frequency specified in paragraphs (c)(1) through (4) of this section and conduct this sampling according to the procedures in § 63.7521(f) through (i).

(1) If the initial mercury constituents in the gaseous fuels are measured to be equal to or less than half of the mercury specification as defined in § 63.7575, you do not need to conduct further sampling.

(2) If the initial mercury constituents are greater than half but equal to or less than 75 percent of the mercury specification as defined in § 63.7575, you will conduct semi-annual sampling. If 6 consecutive semi-annual fuel analyses demonstrate 50 percent or less of the mercury specification, you do not need to conduct further sampling. If any semi-annual sample exceeds 75 percent of the mercury specification, you must return to monthly sampling for that fuel, until 12 months of fuel analyses again are less than 75 percent of the compliance level.

(3) If the initial mercury constituents are greater than 75 percent of the mercury specification as defined in § 63.7575, you will conduct monthly sampling. If 12 consecutive monthly fuel analyses demonstrate 75 percent or less of the mercury specification, you may decrease the fuel analysis frequency to semi-annual for that fuel.

(4) If the initial sample exceeds the mercury specification as defined in § 63.7575, each affected boiler or process heater combusting this fuel is not part of the unit designed to burn gas 1 subcategory and must be in compliance with the emission and operating limits for the appropriate subcategory. You may elect to conduct additional monthly sampling while complying with these emissions and operating limits to demonstrate that the fuel qualifies as another gas 1 fuel. If 12 consecutive monthly fuel analyses samples are at or below the mercury specification as defined in § 63.7575, each affected boiler or process heater combusting the fuel can elect to switch back into the unit designed to burn gas 1 subcategory until the mercury specification is exceeded.

(d) For startup and shutdown, you must meet the work practice standards according to item 5 of Table 3 of this subpart.

[78 FR 7179, Jan. 31, 2013]

§ 63.7541 How do I demonstrate continuous compliance under the emissions averaging provision?

(a) Following the compliance date, the owner or operator must demonstrate compliance with this subpart on a continuous basis by meeting the requirements of paragraphs (a)(1) through (5) of this section.

(1) For each calendar month, demonstrate compliance with the average weighted emissions limit for the existing units participating in the emissions averaging option as determined in § 63.7522(f) and (g).

(2) You must maintain the applicable opacity limit according to paragraphs (a)(2)(i) and (ii) of this section.

(i) For each existing unit participating in the emissions averaging option that is equipped with a dry control system and not vented to a common stack, maintain opacity at or below the applicable limit.

(ii) For each group of units participating in the emissions averaging option where each unit in the group is equipped with a dry control system and vented to a common stack that does not receive emissions from non-affected units, maintain opacity at or below the applicable limit at the common stack.

(3) For each existing unit participating in the emissions averaging option that is equipped with a wet scrubber, maintain the 30-day rolling average parameter values at or above the operating limits established during the most recent performance test.

(4) For each existing unit participating in the emissions averaging option that has an approved alternative operating parameter, maintain the 30-day rolling average parameter values consistent with the approved monitoring plan.

(5) For each existing unit participating in the emissions averaging option venting to a common stack configuration containing affected units from other subcategories, maintain the appropriate operating limit for each unit as specified in Table 4 to this subpart that applies.

(b) Any instance where the owner or operator fails to comply with the continuous monitoring requirements in paragraphs (a)(1) through (5) of this section is a deviation.

[76 FR 15664, Mar. 21, 2011, as amended at 78 FR 7182, Jan. 31, 2013]

Notification, Reports, and Records

§ 63.7545 What notifications must I submit and when?

(a) You must submit to the Administrator all of the notifications in §§ 63.7(b) and (c), 63.8(e), (f)(4) and (6), and 63.9(b) through (h) that apply to you by the dates specified.

(b) As specified in § 63.9(b)(2), if you startup your affected source before January 31, 2013, you must submit an Initial Notification not later than 120 days after January 31, 2013.

(c) As specified in § 63.9(b)(4) and (5), if you startup your new or reconstructed affected source on or after January 31, 2013, you must submit an Initial Notification not later than 15 days after the actual date of startup of the affected source.

(d) If you are required to conduct a performance test you must submit a Notification of Intent to conduct a performance test at least 60 days before the performance test is scheduled to begin.

(e) If you are required to conduct an initial compliance demonstration as specified in § 63.7530, you must submit a Notification of Compliance Status according to § 63.9(h)(2)(ii). For the initial compliance demonstration for each boiler or process heater, you must submit the Notification of Compliance Status, including all performance test results and fuel analyses, before the close of business on the 60th day following the completion of all performance test and/or other initial compliance demonstrations for all boiler or process heaters at the facility according to § 63.10(d)(2). The Notification of Compliance Status report must contain all the information specified in paragraphs (e)(1) through (8), as applicable. If you are not required to conduct an initial compliance demonstration as specified in § 63.7530(a), the Notification of Compliance Status must only contain the information specified in paragraphs (e)(1) and (8).

(1) A description of the affected unit(s) including identification of which subcategories the unit is in, the design heat input capacity of the unit, a description of the add-on controls used on the unit to comply with this subpart, description of the fuel(s) burned, including whether the fuel(s) were a secondary material determined by you or the EPA through a petition process to be a non-waste under § 241.3 of this chapter, whether the fuel(s) were a secondary material processed from discarded non-hazardous secondary materials within the meaning of § 241.3 of this chapter, and justification for the selection of fuel(s) burned during the compliance demonstration.

(2) Summary of the results of all performance tests and fuel analyses, and calculations conducted to demonstrate initial compliance including all established operating limits, and including:

(i) Identification of whether you are complying with the PM emission limit or the alternative TSM emission limit.

(ii) Identification of whether you are complying with the output-based emission limits or the heat input-based (i.e., lb/MMBtu or ppm) emission limits,

(3) A summary of the maximum CO emission levels recorded during the performance test to show that you have met any applicable emission standard in Tables 1, 2, or 11 through 13 to this subpart, if you are not using a CO CEMS to demonstrate compliance.

(4) Identification of whether you plan to demonstrate compliance with each applicable emission limit through performance testing, a CEMS, or fuel analysis.

(5) Identification of whether you plan to demonstrate compliance by emissions averaging and identification of whether you plan to demonstrate compliance by using efficiency credits through energy conservation:

(i) If you plan to demonstrate compliance by emission averaging, report the emission level that was being achieved or the control technology employed on January 31, 2013.

(ii) [Reserved]

(6) A signed certification that you have met all applicable emission limits and work practice standards.

(7) If you had a deviation from any emission limit, work practice standard, or operating limit, you must also submit a description of the deviation, the duration of the deviation, and the corrective action taken in the Notification of Compliance Status report.

(8) In addition to the information required in § 63.9(h)(2), your notification of compliance status must include the following certification(s) of compliance, as applicable, and signed by a responsible official:

(i) “This facility complies with the required initial tune-up according to the procedures in § 63.7540(a)(10)(i) through (vi).”

(ii) “This facility has had an energy assessment performed according to § 63.7530(e).”

(iii) Except for units that burn only natural gas, refinery gas, or other gas 1 fuel, or units that qualify for a statutory exemption as provided in section 129(g)(1) of the Clean Air Act, include the following: “No secondary materials that are solid waste were combusted in any affected unit.”

(f) If you operate a unit designed to burn natural gas, refinery gas, or other gas 1 fuels that is subject to this subpart, and you intend to use a fuel other than natural gas, refinery gas, gaseous fuel subject to another subpart of this part, part 60, 61, or 65, or other gas 1 fuel to fire the affected unit during a period of natural gas curtailment or supply interruption, as defined in § 63.7575, you must submit a notification of alternative fuel use within 48 hours of the declaration of each period of natural gas curtailment or supply interruption, as defined in § 63.7575. The notification must include the information specified in paragraphs (f)(1) through (5) of this section.

(1) Company name and address.

(2) Identification of the affected unit.

(3) Reason you are unable to use natural gas or equivalent fuel, including the date when the natural gas curtailment was declared or the natural gas supply interruption began.

(4) Type of alternative fuel that you intend to use.

(5) Dates when the alternative fuel use is expected to begin and end.

(g) If you intend to commence or recommence combustion of solid waste, you must provide 30 days prior notice of the date upon which you will commence or recommence combustion of solid waste. The notification must identify:

(1) The name of the owner or operator of the affected source, as defined in § 63.7490, the location of the source, the boiler(s) or process heater(s) that will commence burning solid waste, and the date of the notice.

(2) The currently applicable subcategories under this subpart.

(3) The date on which you became subject to the currently applicable emission limits.

(4) The date upon which you will commence combusting solid waste.

(h) If you have switched fuels or made a physical change to the boiler and the fuel switch or physical change resulted in the applicability of a different subcategory, you must provide notice of the date upon which you switched fuels or made the physical change within 30 days of the switch/change. The notification must identify:

(1) The name of the owner or operator of the affected source, as defined in § 63.7490, the location of the source, the boiler(s) and process heater(s) that have switched fuels, were physically changed, and the date of the notice.

(2) The currently applicable subcategory under this subpart.

(3) The date upon which the fuel switch or physical change occurred.

[76 FR 15664, Mar. 21, 2011, as amended at 78 FR 7183, Jan. 31, 2013]

§ 63.7550 What reports must I submit and when?

(a) You must submit each report in Table 9 to this subpart that applies to you.

(b) Unless the EPA Administrator has approved a different schedule for submission of reports under § 63.10(a), you must submit each report, according to paragraph (h) of this section, by the date in Table 9 to this subpart and according to the requirements in paragraphs (b)(1) through (4) of this section. For units that are subject only to a requirement to conduct an annual, biennial, or 5-year tune-up according to § 63.7540(a)(10), (11), or (12), respectively, and not subject to emission limits or operating limits, you may submit only an annual, biennial, or 5-year compliance report, as applicable, as specified in paragraphs (b)(1) through (4) of this section, instead of a semi-annual compliance report.

(1) The first compliance report must cover the period beginning on the compliance date that is specified for each boiler or process heater in § 63.7495 and ending on July 31 or January 31, whichever date is the first date that occurs at least 180 days (or 1, 2, or 5 years, as applicable, if submitting an annual, biennial, or 5-year compliance report) after the compliance date that is specified for your source in § 63.7495.

(2) The first compliance report must be postmarked or submitted no later than July 31 or January 31, whichever date is the first date following the end of the first calendar half after the compliance date that is specified for each boiler or process heater in § 63.7495. The first annual, biennial, or 5-year compliance report must be postmarked or submitted no later than January 31.

(3) Each subsequent compliance report must cover the semiannual reporting period from January 1 through June 30 or the semiannual reporting period from July 1 through December 31. Annual, biennial, and 5-year compliance reports must cover the applicable 1-, 2-, or 5-year periods from January 1 to December 31.

(4) Each subsequent compliance report must be postmarked or submitted no later than July 31 or January 31, whichever date is the first date following the end of the semiannual reporting period. Annual, biennial, and 5-year compliance reports must be postmarked or submitted no later than January 31.

(c) A compliance report must contain the following information depending on how the facility chooses to comply with the limits set in this rule.

(1) If the facility is subject to a the requirements of a tune up they must submit a compliance report with the information in paragraphs (c)(5)(i) through (iv) and (xiv) of this section.

(2) If a facility is complying with the fuel analysis they must submit a compliance report with the information in paragraphs (c)(5)(i) through (iv), (vi), (x), (xi), (xiii), (xv) and paragraph (d) of this section.

(3) If a facility is complying with the applicable emissions limit with performance testing they must submit a compliance report with the information in (c)(5)(i) through (iv), (vi), (vii), (ix), (xi), (xiii), (xv) and paragraph (d) of this section.

(4) If a facility is complying with an emissions limit using a CMS the compliance report must contain the information required in paragraphs (c)(5)(i) through (vi), (xi), (xiii), (xv) through (xvii), and paragraph (e) of this section.

(5)(i) Company and Facility name and address.

(ii) Process unit information, emissions limitations, and operating parameter limitations.

(iii) Date of report and beginning and ending dates of the reporting period.

(iv) The total operating time during the reporting period.

(v) If you use a CMS, including CEMS, COMS, or CPMS, you must include the monitoring equipment manufacturer(s) and model numbers and the date of the last CMS certification or audit.

(vi) The total fuel use by each individual boiler or process heater subject to an emission limit within the reporting period, including, but not limited to, a description of the fuel, whether the fuel has received a non-waste determination by the EPA or your basis for concluding that the fuel is not a waste, and the total fuel usage amount with units of measure.

(vii) If you are conducting performance tests once every 3 years consistent with § 63.7515(b) or (c), the date of the last 2 performance tests and a statement as to whether there have been any operational changes since the last performance test that could increase emissions.

(viii) A statement indicating that you burned no new types of fuel in an individual boiler or process heater subject to an emission limit. Or, if you did burn a new type of fuel and are subject to a HCl emission limit, you must submit the calculation of chlorine input, using Equation 7 of § 63.7530, that demonstrates that your source is still within its maximum chlorine input level established during the previous performance testing (for sources that demonstrate compliance through performance testing) or you must submit the calculation of HCl emission rate using Equation 12 of § 63.7530 that demonstrates that your source is still meeting the emission limit for HCl emissions (for boilers or process heaters that demonstrate compliance through fuel analysis). If you burned a new type of fuel and are subject to a mercury emission limit, you must submit the calculation of mercury input, using Equation 8 of § 63.7530, that demonstrates that your source is still within its maximum mercury input level established during the previous performance testing (for sources that demonstrate compliance through performance testing), or you must submit the calculation of mercury emission rate using Equation 13 of § 63.7530 that demonstrates that your source is still meeting the emission limit for mercury emissions (for boilers or process heaters that demonstrate compliance through fuel analysis). If you burned a new type of fuel and are subject to a TSM emission limit, you must submit the calculation of TSM input, using Equation 9 of § 63.7530, that demonstrates that your source is still within its maximum TSM input level established during the previous performance testing (for sources that demonstrate compliance through performance testing), or you must submit the calculation of TSM emission rate, using Equation 14 of § 63.7530, that demonstrates that your source is still meeting the emission limit for TSM emissions (for boilers or process heaters that demonstrate compliance through fuel analysis).

(ix) If you wish to burn a new type of fuel in an individual boiler or process heater subject to an emission limit and you cannot demonstrate compliance with the maximum chlorine input operating limit using Equation 7 of § 63.7530 or the maximum mercury input operating limit using Equation 8 of § 63.7530, or the maximum TSM input operating limit using Equation 9 of § 63.7530 you must include in the compliance report a statement indicating the intent to conduct a new performance test within 60 days of starting to burn the new fuel.

(x) A summary of any monthly fuel analyses conducted to demonstrate compliance according to §§ 63.7521 and 63.7530 for individual boilers or process heaters subject to emission limits, and any fuel specification analyses conducted according to §§ 63.7521(f) and 63.7530(g).

(xi) If there are no deviations from any emission limits or operating limits in this subpart that apply to you, a statement that there were no deviations from the emission limits or operating limits during the reporting period.

(xii) If there were no deviations from the monitoring requirements including no periods during which the CMSs, including CEMS, COMS, and CPMS, were out of control as specified in § 63.8(c)(7), a statement that there were no deviations and no periods during which the CMS were out of control during the reporting period.

(xiii) If a malfunction occurred during the reporting period, the report must include the number, duration, and a brief description for each type of malfunction which occurred during the reporting period and which caused or may have caused any applicable emission limitation to be exceeded. The report must also include a description of actions taken by you during a malfunction of a boiler, process heater, or associated air pollution control device or CMS to minimize emissions in accordance with § 63.7500(a)(3), including actions taken to correct the malfunction.

(xiv) Include the date of the most recent tune-up for each unit subject to only the requirement to conduct an annual, biennial, or 5-year tune-up according to § 63.7540(a)(10), (11), or (12) respectively. Include the date of the most recent burner inspection if it was not done annually, biennially, or on a 5-year period and was delayed until the next scheduled or unscheduled unit shutdown.

(xv) If you plan to demonstrate compliance by emission averaging, certify the emission level achieved or the control technology employed is no less stringent than the level or control technology contained in the notification of compliance status in § 63.7545(e)(5)(i).

(xvi) For each reporting period, the compliance reports must include all of the calculated 30 day rolling average values based on the daily CEMS (CO and mercury) and CPMS (PM CPMS output, scrubber pH, scrubber liquid flow rate, scrubber pressure drop) data.

(xvii) Statement by a responsible official with that official's name, title, and signature, certifying the truth, accuracy, and completeness of the content of the report.

(d) For each deviation from an emission limit or operating limit in this subpart that occurs at an individual boiler or process heater where you are not using a CMS to comply with that emission limit or operating limit, the compliance report must additionally contain the information required in paragraphs (d)(1) through (3) of this section.

(1) A description of the deviation and which emission limit or operating limit from which you deviated.

(2) Information on the number, duration, and cause of deviations (including unknown cause), as applicable, and the corrective action taken.

(3) If the deviation occurred during an annual performance test, provide the date the annual performance test was completed.

(e) For each deviation from an emission limit, operating limit, and monitoring requirement in this subpart occurring at an individual boiler or process heater where you are using a CMS to comply with that emission limit or operating limit, the compliance report must additionally contain the information required in paragraphs (e)(1) through (9) of this section. This includes any deviations from your site-specific monitoring plan as required in § 63.7505(d).

(1) The date and time that each deviation started and stopped and description of the nature of the deviation (i.e., what you deviated from).

(2) The date and time that each CMS was inoperative, except for zero (low-level) and high-level checks.

(3) The date, time, and duration that each CMS was out of control, including the information in § 63.8(c)(8).

(4) The date and time that each deviation started and stopped.

(5) A summary of the total duration of the deviation during the reporting period and the total duration as a percent of the total source operating time during that reporting period.

(6) A characterization of the total duration of the deviations during the reporting period into those that are due to control equipment problems, process problems, other known causes, and other unknown causes.

(7) A summary of the total duration of CMS's downtime during the reporting period and the total duration of CMS downtime as a percent of the total source operating time during that reporting period.

(8) A brief description of the source for which there was a deviation.

(9) A description of any changes in CMSs, processes, or controls since the last reporting period for the source for which there was a deviation.

(f)-(g) [Reserved]

(h) You must submit the reports according to the procedures specified in paragraphs (h)(1) through (3) of this section.

(1) Within 60 days after the date of completing each performance test (defined in § 63.2) as required by this subpart you must submit the results of the performance tests, including any associated fuel analyses, required by this subpart and the compliance reports required in § 63.7550(b) to the EPA's WebFIRE database by using the Compliance and Emissions Data Reporting Interface (CEDRI) that is accessed through the EPA's Central Data Exchange (CDX) (*www.epa.gov/cdx*). Performance test data must be submitted in the file format generated through use of the EPA's Electronic Reporting Tool (ERT) (see *http://www.epa.gov/ttn/chief/ert/index.html*). Only data collected using test methods on the ERT Web site are subject to this requirement for submitting reports electronically to WebFIRE. Owners or operators who claim that some of the information being submitted for performance tests is confidential business information (CBI) must submit a complete ERT file including information claimed to be CBI on a compact disk or other commonly used electronic storage media (including, but not limited to, flash drives) to the EPA. The electronic media must be clearly marked as CBI and mailed to U.S. EPA/OAPQS/CORE CBI Office, Attention: WebFIRE Administrator, MD C404-02, 4930 Old Page Rd., Durham, NC 27703. The same ERT file with the CBI omitted must be submitted to the EPA via CDX as described earlier in this paragraph. At the discretion of the Administrator, you must also submit these reports, including the confidential business information, to the Administrator in the format specified by the Administrator. For any performance test conducted using test methods that are not listed on the ERT Web site, the owner or operator shall submit the results of the performance test in paper submissions to the Administrator.

(2) Within 60 days after the date of completing each CEMS performance evaluation test (defined in 63.2) you must submit the relative accuracy test audit (RATA) data to the EPA's Central Data Exchange by using CEDRI as mentioned in paragraph (h)(1) of this section. Only RATA pollutants that can be documented with the ERT (as listed on the ERT Web site) are subject to this requirement. For any performance evaluations with no corresponding RATA pollutants listed on the ERT Web site, the owner or operator shall submit the results of the performance evaluation in paper submissions to the Administrator.

(3) You must submit all reports required by Table 9 of this subpart electronically using CEDRI that is accessed through the EPA's Central Data Exchange (CDX) (*www.epa.gov/cdx*). However, if the reporting form specific to this subpart is not available in CEDRI at the time that the report is due the report you must submit the report to the Administrator at the appropriate address listed in § 63.13. At the discretion of the Administrator, you must also submit these reports, to the Administrator in the format specified by the Administrator.

[78 FR 7183, Jan. 31, 2013]

§ 63.7555 What records must I keep?

(a) You must keep records according to paragraphs (a)(1) and (2) of this section.

(1) A copy of each notification and report that you submitted to comply with this subpart, including all documentation supporting any Initial Notification or Notification of Compliance Status or semiannual compliance report that you submitted, according to the requirements in § 63.10(b)(2)(xiv).

(2) Records of performance tests, fuel analyses, or other compliance demonstrations and performance evaluations as required in § 63.10(b)(2)(viii).

(b) For each CEMS, COMS, and continuous monitoring system you must keep records according to paragraphs (b)(1) through (5) of this section.

(1) Records described in § 63.10(b)(2)(vii) through (xi).

(2) Monitoring data for continuous opacity monitoring system during a performance evaluation as required in § 63.6(h)(7)(i) and (ii).

(3) Previous (*i.e.,* superseded) versions of the performance evaluation plan as required in § 63.8(d)(3).

(4) Request for alternatives to relative accuracy test for CEMS as required in § 63.8(f)(6)(i).

(5) Records of the date and time that each deviation started and stopped.

(c) You must keep the records required in Table 8 to this subpart including records of all monitoring data and calculated averages for applicable operating limits, such as opacity, pressure drop, pH, and operating load, to show continuous compliance with each emission limit and operating limit that applies to you.

(d) For each boiler or process heater subject to an emission limit in Tables 1, 2, or 11 through 13 to this subpart, you must also keep the applicable records in paragraphs (d)(1) through (11) of this section.

(1) You must keep records of monthly fuel use by each boiler or process heater, including the type(s) of fuel and amount(s) used.

(2) If you combust non-hazardous secondary materials that have been determined not to be solid waste pursuant to § 241.3(b)(1) and (2) of this chapter, you must keep a record that documents how the secondary material meets each of the legitimacy criteria under § 241.3(d)(1) of this chapter. If you combust a fuel that has been processed from a discarded non-hazardous secondary material pursuant to § 241.3(b)(4) of this chapter, you must keep records as to how the operations that produced the fuel satisfy the definition of processing in § 241.2 of this chapter. If the fuel received a non-waste determination pursuant to the petition process submitted under § 241.3(c) of this chapter, you must keep a record that documents how the fuel satisfies the requirements of the petition process. For operating units that combust non-hazardous secondary materials as fuel per § 241.4 of this chapter, you must keep records documenting that the material is listed as a non-waste under § 241.4(a) of this chapter. Units exempt from the incinerator standards under section 129(g)(1) of the Clean Air Act because they are qualifying facilities burning a homogeneous waste stream do not need to maintain the records described in this paragraph (d)(2).

(3) For units in the limited use subcategory, you must keep a copy of the federally enforceable permit that limits the annual capacity factor to less than or equal to 10 percent and fuel use records for the days the boiler or process heater was operating.

(4) A copy of all calculations and supporting documentation of maximum chlorine fuel input, using Equation 7 of § 63.7530, that were done to demonstrate continuous compliance with the HCl emission limit, for sources that demonstrate compliance through performance testing. For sources that demonstrate compliance through fuel analysis, a copy of all calculations and supporting documentation of HCl emission rates, using Equation 12 of § 63.7530, that were done to demonstrate compliance with the HCl emission limit. Supporting documentation should include results of any fuel analyses and basis for the estimates of maximum chlorine fuel input or HCl emission rates. You can use the results from one fuel analysis for multiple boilers and process heaters provided they are all burning the same fuel type. However, you must calculate chlorine fuel input, or HCl emission rate, for each boiler and process heater.

(5) A copy of all calculations and supporting documentation of maximum mercury fuel input, using Equation 8 of § 63.7530, that were done to demonstrate continuous compliance with the mercury emission limit for sources that demonstrate compliance through performance testing. For sources that demonstrate compliance through fuel analysis, a copy of all calculations and supporting documentation of mercury emission rates, using Equation 13 of § 63.7530, that were done to demonstrate compliance with the mercury emission limit. Supporting documentation should include results of any fuel analyses and basis for the estimates of maximum mercury fuel input or mercury emission rates. You can use the results from one fuel analysis for multiple boilers and process heaters provided they are all burning the same fuel type. However, you must calculate mercury fuel input, or mercury emission rates, for each boiler and process heater.

(6) If, consistent with § 63.7515(b), you choose to stack test less frequently than annually, you must keep a record that documents that your emissions in the previous stack test(s) were less than 75 percent of the applicable emission limit (or, in specific instances noted in Tables 1 and 2 or 11 through 13 to this subpart, less than the applicable

emission limit), and document that there was no change in source operations including fuel composition and operation of air pollution control equipment that would cause emissions of the relevant pollutant to increase within the past year.

(7) Records of the occurrence and duration of each malfunction of the boiler or process heater, or of the associated air pollution control and monitoring equipment.

(8) Records of actions taken during periods of malfunction to minimize emissions in accordance with the general duty to minimize emissions in § 63.7500(a)(3), including corrective actions to restore the malfunctioning boiler or process heater, air pollution control, or monitoring equipment to its normal or usual manner of operation.

(9) A copy of all calculations and supporting documentation of maximum TSM fuel input, using Equation 9 of § 63.7530, that were done to demonstrate continuous compliance with the TSM emission limit for sources that demonstrate compliance through performance testing. For sources that demonstrate compliance through fuel analysis, a copy of all calculations and supporting documentation of TSM emission rates, using Equation 14 of § 63.7530, that were done to demonstrate compliance with the TSM emission limit. Supporting documentation should include results of any fuel analyses and basis for the estimates of maximum TSM fuel input or TSM emission rates. You can use the results from one fuel analysis for multiple boilers and process heaters provided they are all burning the same fuel type. However, you must calculate TSM fuel input, or TSM emission rates, for each boiler and process heater.

(10) You must maintain records of the calendar date, time, occurrence and duration of each startup and shutdown.

(11) You must maintain records of the type(s) and amount(s) of fuels used during each startup and shutdown.

(e) If you elect to average emissions consistent with § 63.7522, you must additionally keep a copy of the emission averaging implementation plan required in § 63.7522(g), all calculations required under § 63.7522, including monthly records of heat input or steam generation, as applicable, and monitoring records consistent with § 63.7541.

(f) If you elect to use efficiency credits from energy conservation measures to demonstrate compliance according to § 63.7533, you must keep a copy of the Implementation Plan required in § 63.7533(d) and copies of all data and calculations used to establish credits according to § 63.7533(b), (c), and (f).

(g) If you elected to demonstrate that the unit meets the specification for mercury for the unit designed to burn gas 1 subcategory, you must maintain monthly records (or at the frequency required by § 63.7540(c)) of the calculations and results of the fuel specification for mercury in Table 6.

(h) If you operate a unit in the unit designed to burn gas 1 subcategory that is subject to this subpart, and you use an alternative fuel other than natural gas, refinery gas, gaseous fuel subject to another subpart under this part, other gas 1 fuel, or gaseous fuel subject to another subpart of this part or part 60, 61, or 65, you must keep records of the total hours per calendar year that alternative fuel is burned and the total hours per calendar year that the unit operated during periods of gas curtailment or gas supply emergencies.

(i) You must maintain records of the calendar date, time, occurrence and duration of each startup and shutdown.

(j) You must maintain records of the type(s) and amount(s) of fuels used during each startup and shutdown.

[76 FR 15664, Mar. 21, 2011, as amended at 78 FR 7185, Jan. 31, 2013]

§ 63.7560 In what form and how long must I keep my records?

(a) Your records must be in a form suitable and readily available for expeditious review, according to § 63.10(b)(1).

(b) As specified in § 63.10(b)(1), you must keep each record for 5 years following the date of each occurrence, measurement, maintenance, corrective action, report, or record.

(c) You must keep each record on site, or they must be accessible from on site (for example, through a computer network), for at least 2 years after the date of each occurrence, measurement, maintenance, corrective action, report, or record, according to § 63.10(b)(1). You can keep the records off site for the remaining 3 years.

Other Requirements and Information

§ 63.7565 What parts of the General Provisions apply to me?

Table 10 to this subpart shows which parts of the General Provisions in §§ 63.1 through 63.15 apply to you.

§ 63.7570 Who implements and enforces this subpart?

(a) This subpart can be implemented and enforced by the EPA, or an Administrator such as your state, local, or tribal agency. If the EPA Administrator has delegated authority to your state, local, or tribal agency, then that agency (as well as the EPA) has the authority to implement and enforce this subpart. You should contact your EPA Regional Office to find out if this subpart is delegated to your state, local, or tribal agency.

(b) In delegating implementation and enforcement authority of this subpart to a state, local, or tribal agency under 40 CFR part 63, subpart E, the authorities listed in paragraphs (b)(1) through (5) of this section are retained by the EPA Administrator and are not transferred to the state, local, or tribal agency, however, the EPA retains oversight of this subpart and can take enforcement actions, as appropriate.

(1) Approval of alternatives to the non-opacity emission limits and work practice standards in § 63.7500(a) and (b) under § 63.6(g).

(2) Approval of alternative opacity emission limits in § 63.7500(a) under § 63.6(h)(9).

(3) Approval of major change to test methods in Table 5 to this subpart under § 63.7(e)(2)(ii) and (f) and as defined in § 63.90, and alternative analytical methods requested under § 63.7521(b)(2).

(4) Approval of major change to monitoring under § 63.8(f) and as defined in § 63.90, and approval of alternative operating parameters under § 63.7500(a)(2) and § 63.7522(g)(2).

(5) Approval of major change to recordkeeping and reporting under § 63.10(e) and as defined in § 63.90.

[76 FR 15664, Mar. 21, 2011 as amended at 78 FR 7186, Jan. 31, 2013]

§ 63.7575 What definitions apply to this subpart?

Terms used in this subpart are defined in the Clean Air Act, in § 63.2 (the General Provisions), and in this section as follows:

10-day rolling average means the arithmetic mean of the previous 240 hours of valid operating data. Valid data excludes hours during startup and shutdown, data collected during periods when the monitoring system is out of control as specified in your site-specific monitoring plan, while conducting repairs associated with periods when the monitoring system is out of control, or while conducting required monitoring system quality assurance or quality control activities, and periods when this unit is not operating. The 240 hours should be consecutive, but not necessarily continuous if operations were intermittent.

30-day rolling average means the arithmetic mean of the previous 720 hours of valid operating data. Valid data excludes hours during startup and shutdown, data collected during periods when the monitoring system is out of control as specified in your site-specific monitoring plan, while conducting repairs associated with periods when the monitoring system is out of control, or while conducting required monitoring system quality assurance or quality control activities, and periods when this unit is not operating. The 720 hours should be consecutive, but not necessarily continuous if operations were intermittent.

Affirmative defense means, in the context of an enforcement proceeding, a response or defense put forward by a defendant, regarding which the defendant has the burden of proof, and the merits of which are independently and objectively evaluated in a judicial or administrative proceeding.

Annual capacity factor means the ratio between the actual heat input to a boiler or process heater from the fuels burned during a calendar year and the potential heat input to the boiler or process heater had it been operated for 8,760 hours during a year at the maximum steady state design heat input capacity.

Annual heat input means the heat input for the 12 months preceding the compliance demonstration.

Average annual heat input rate means total heat input divided by the hours of operation for the 12 months preceding the compliance demonstration.

Bag leak detection system means a group of instruments that are capable of monitoring particulate matter loadings in the exhaust of a fabric filter (*i.e.,* baghouse) in order to detect bag failures. A bag leak detection system includes, but is not limited to, an instrument that operates on electrodynamic, triboelectric, light scattering, light transmittance, or other principle to monitor relative particulate matter loadings.

Benchmark means the fuel heat input for a boiler or process heater for the one-year period before the date that an energy demand reduction occurs, unless it can be demonstrated that a different time period is more representative of historical operations.

Biodiesel means a mono-alkyl ester derived from biomass and conforming to ASTM D6751-11b, Standard Specification for Biodiesel Fuel Blend Stock (B100) for Middle Distillate Fuels (incorporated by reference, see § 63.14).

Biomass or bio-based solid fuel means any biomass-based solid fuel that is not a solid waste. This includes, but is not limited to, wood residue; wood products (*e.g.,* trees, tree stumps, tree limbs, bark, lumber, sawdust, sander dust, chips, scraps, slabs, millings, and shavings); animal manure, including litter and other bedding materials; vegetative agricultural and silvicultural materials, such as logging residues (slash), nut and grain hulls and chaff (*e.g.,* almond, walnut, peanut, rice, and wheat), bagasse, orchard prunings, corn stalks, coffee bean hulls and grounds. This definition of biomass is not intended to suggest that these materials are or are not solid waste.

Blast furnace gas fuel-fired boiler or process heater means an industrial/commercial/institutional boiler or process heater that receives 90 percent or more of its total annual gas volume from blast furnace gas.

Boiler means an enclosed device using controlled flame combustion and having the primary purpose of recovering thermal energy in the form of steam or hot water. Controlled flame combustion refers to a steady-state, or near steady-state, process wherein fuel and/or oxidizer feed rates are controlled. A device combusting solid waste, as defined in § 241.3 of this chapter, is not a boiler unless the device is exempt from the definition of a solid waste incineration unit as provided in section 129(g)(1) of the Clean Air Act. Waste heat boilers are excluded from this definition.

Boiler system means the boiler and associated components, such as, the feed water system, the combustion air system, the fuel system (including burners), blowdown system, combustion control systems, steam systems, and condensate return systems.

Calendar year means the period between January 1 and December 31, inclusive, for a given year.

Coal means all solid fuels classifiable as anthracite, bituminous, sub-bituminous, or lignite by ASTM D388 (incorporated by reference, see § 63.14), coal refuse, and petroleum coke. For the purposes of this subpart, this definition of “coal” includes synthetic fuels derived from coal, including but not limited to, solvent-refined coal, coal-oil mixtures, and coal-water mixtures. Coal derived gases are excluded from this definition.

Coal refuse means any by-product of coal mining or coal cleaning operations with an ash content greater than 50 percent (by weight) and a heating value less than 13,900 kilojoules per kilogram (6,000 Btu per pound) on a dry basis.

Commercial/institutional boiler means a boiler used in commercial establishments or institutional establishments such as medical centers, nursing homes, research centers, institutions of higher education, elementary and secondary schools, libraries, religious establishments, governmental buildings, hotels, restaurants, and laundries to provide electricity, steam, and/or hot water.

Common stack means the exhaust of emissions from two or more affected units through a single flue. Affected units with a common stack may each have separate air pollution control systems located before the common stack, or may have a single air pollution control system located after the exhausts come together in a single flue.

Cost-effective energy conservation measure means a measure that is implemented to improve the energy efficiency of the boiler or facility that has a payback (return of investment) period of 2 years or less.

Daily block average means the arithmetic mean of all valid emission concentrations or parameter levels recorded when a unit is operating measured over the 24-hour period from 12 a.m. (midnight) to 12 a.m. (midnight), except for periods of startup and shutdown or downtime.

Deviation. (1) *Deviation* means any instance in which an affected source subject to this subpart, or an owner or operator of such a source:

(i) Fails to meet any applicable requirement or obligation established by this subpart including, but not limited to, any emission limit, operating limit, or work practice standard; or

(ii) Fails to meet any term or condition that is adopted to implement an applicable requirement in this subpart and that is included in the operating permit for any affected source required to obtain such a permit.

(2) A deviation is not always a violation.

Dioxins/furans means tetra- through octa-chlorinated dibenzo-p-dioxins and dibenzofurans.

Distillate oil means fuel oils that contain 0.05 weight percent nitrogen or less and comply with the specifications for fuel oil numbers 1 and 2, as defined by the American Society of Testing and Materials in ASTM D396 (incorporated by reference, see § 63.14) or diesel fuel oil numbers 1 and 2, as defined by the American Society for Testing and Materials in ASTM D975 (incorporated by reference, see § 63.14), kerosene, and biodiesel as defined by the American Society of Testing and Materials in ASTM D6751-11b (incorporated by reference, see § 60.14).

Dry scrubber means an add-on air pollution control system that injects dry alkaline sorbent (dry injection) or sprays an alkaline sorbent (spray dryer) to react with and neutralize acid gas in the exhaust stream forming a dry powder material. Sorbent injection systems used as control devices in fluidized bed boilers and process heaters are included in this definition. A dry scrubber is a dry control system.

Dutch oven means a unit having a refractory-walled cell connected to a conventional boiler setting. Fuel materials are introduced through an opening in the roof of the dutch oven and burn in a pile on its floor. Fluidized bed boilers are not part of the dutch oven design category.

Efficiency credit means emission reductions above those required by this subpart. Efficiency credits generated may be used to comply with the emissions limits. Credits may come from pollution prevention projects that result in reduced fuel use by affected units. Boilers that are shut down cannot be used to generate credits unless the facility provides documentation linking the permanent shutdown to implementation of the energy conservation measures identified in the energy assessment.

Electric utility steam generating unit (EGU) means a fossil fuel-fired combustion unit of more than 25 megawatts electric (MWe) that serves a generator that produces electricity for sale. A fossil fuel-fired unit that cogenerates steam and electricity and supplies more than one-third of its potential electric output capacity and more than 25 MWe output to any utility power distribution system for sale is considered an electric utility steam generating unit. To be “capable of combusting” fossil fuels, an EGU would need to have these fuels allowed in their operating permits and have the appropriate fuel handling facilities on-site or otherwise available (e.g., coal handling equipment, including coal storage area, belts and conveyers, pulverizers, etc.; oil storage facilities). In addition, fossil fuel-fired EGU means any EGU

that fired fossil fuel for more than 10.0 percent of the average annual heat input in any 3 consecutive calendar years or for more than 15.0 percent of the annual heat input during any one calendar year after April 16, 2012.

Electrostatic precipitator (ESP) means an add-on air pollution control device used to capture particulate matter by charging the particles using an electrostatic field, collecting the particles using a grounded collecting surface, and transporting the particles into a hopper. An electrostatic precipitator is usually a dry control system.

Energy assessment means the following for the emission units covered by this subpart:

(1) The energy assessment for facilities with affected boilers and process heaters with a combined heat input capacity of less than 0.3 trillion Btu (TBtu) per year will be 8 on-site technical labor hours in length maximum, but may be longer at the discretion of the owner or operator of the affected source. The boiler system(s) and any on-site energy use system(s) accounting for at least 50 percent of the affected boiler(s) energy (e.g., steam, hot water, process heat, or electricity) production, as applicable, will be evaluated to identify energy savings opportunities, within the limit of performing an 8-hour on-site energy assessment.

(2) The energy assessment for facilities with affected boilers and process heaters with a combined heat input capacity of 0.3 to 1.0 TBtu/year will be 24 on-site technical labor hours in length maximum, but may be longer at the discretion of the owner or operator of the affected source. The boiler system(s) and any on-site energy use system(s) accounting for at least 33 percent of the energy (e.g., steam, hot water, process heat, or electricity) production, as applicable, will be evaluated to identify energy savings opportunities, within the limit of performing a 24-hour on-site energy assessment.

(3) The energy assessment for facilities with affected boilers and process heaters with a combined heat input capacity greater than 1.0 TBtu/year will be up to 24 on-site technical labor hours in length for the first TBtu/yr plus 8 on-site technical labor hours for every additional 1.0 TBtu/yr not to exceed 160 on-site technical hours, but may be longer at the discretion of the owner or operator of the affected source. The boiler system(s), process heater(s), and any on-site energy use system(s) accounting for at least 20 percent of the energy (e.g., steam, process heat, hot water, or electricity) production, as applicable, will be evaluated to identify energy savings opportunities.

(4) The on-site energy use systems serving as the basis for the percent of affected boiler(s) and process heater(s) energy production in paragraphs (1), (2), and (3) of this definition may be segmented by production area or energy use area as most logical and applicable to the specific facility being assessed (e.g., product X manufacturing area; product Y drying area; Building Z).

Energy management practices means the set of practices and procedures designed to manage energy use that are demonstrated by the facility's energy policies, a facility energy manager and other staffing responsibilities, energy performance measurement and tracking methods, an energy saving goal, action plans, operating procedures, internal reporting requirements, and periodic review intervals used at the facility.

Energy management program means a program that includes a set of practices and procedures designed to manage energy use that are demonstrated by the facility's energy policies, a facility energy manager and other staffing responsibilities, energy performance measurement and tracking methods, an energy saving goal, action plans, operating procedures, internal reporting requirements, and periodic review intervals used at the facility. Facilities may establish their program through energy management systems compatible with ISO 50001.

Energy use system includes the following systems located on-site that use energy (steam, hot water, or electricity) provided by the affected boiler or process heater: process heating; compressed air systems; machine drive (motors, pumps, fans); process cooling; facility heating, ventilation, and air-conditioning systems; hot water systems; building envelop; and lighting; or other systems that use steam, hot water, process heat, or electricity provided by the affected boiler or process heater. Energy use systems are only those systems using energy clearly produced by affected boilers and process heaters.

Equivalent means the following only as this term is used in Table 6 to this subpart:

(1) An equivalent sample collection procedure means a published voluntary consensus standard or practice (VCS) or EPA method that includes collection of a minimum of three composite fuel samples, with each composite consisting of a minimum of three increments collected at approximately equal intervals over the test period.

(2) An equivalent sample compositing procedure means a published VCS or EPA method to systematically mix and obtain a representative subsample (part) of the composite sample.

(3) An equivalent sample preparation procedure means a published VCS or EPA method that: Clearly states that the standard, practice or method is appropriate for the pollutant and the fuel matrix; or is cited as an appropriate sample preparation standard, practice or method for the pollutant in the chosen VCS or EPA determinative or analytical method.

(4) An equivalent procedure for determining heat content means a published VCS or EPA method to obtain gross calorific (or higher heating) value.

(5) An equivalent procedure for determining fuel moisture content means a published VCS or EPA method to obtain moisture content. If the sample analysis plan calls for determining metals (especially the mercury, selenium, or arsenic) using an aliquot of the dried sample, then the drying temperature must be modified to prevent vaporizing these metals. On the other hand, if metals analysis is done on an “as received” basis, a separate aliquot can be dried to determine moisture content and the metals concentration mathematically adjusted to a dry basis.

(6) An equivalent pollutant (mercury, HCl) determinative or analytical procedure means a published VCS or EPA method that clearly states that the standard, practice, or method is appropriate for the pollutant and the fuel matrix and has a published detection limit equal or lower than the methods listed in Table 6 to this subpart for the same purpose.

Fabric filter means an add-on air pollution control device used to capture particulate matter by filtering gas streams through filter media, also known as a baghouse. A fabric filter is a dry control system.

Federally enforceable means all limitations and conditions that are enforceable by the EPA Administrator, including, but not limited to, the requirements of 40 CFR parts 60, 61, 63, and 65, requirements within any applicable state implementation plan, and any permit requirements established under 40 CFR 52.21 or under 40 CFR 51.18 and 40 CFR 51.24.

Fluidized bed boiler means a boiler utilizing a fluidized bed combustion process that is not a pulverized coal boiler.

Fluidized bed boiler with an integrated fluidized bed heat exchanger means a boiler utilizing a fluidized bed combustion where the entire tube surface area is located outside of the furnace section at the exit of the cyclone section and exposed to the flue gas stream for conductive heat transfer. This design applies only to boilers in the unit designed to burn coal/solid fossil fuel subcategory that fire coal refuse.

Fluidized bed combustion means a process where a fuel is burned in a bed of granulated particles, which are maintained in a mobile suspension by the forward flow of air and combustion products.

Fuel cell means a boiler type in which the fuel is dropped onto suspended fixed grates and is fired in a pile. The refractory-lined fuel cell uses combustion air preheating and positioning of secondary and tertiary air injection ports to improve boiler efficiency. Fluidized bed, dutch oven, pile burner, hybrid suspension grate, and suspension burners are not part of the fuel cell subcategory.

Fuel type means each category of fuels that share a common name or classification. Examples include, but are not limited to, bituminous coal, sub-bituminous coal, lignite, anthracite, biomass, distillate oil, residual oil. Individual fuel types received from different suppliers are not considered new fuel types.

Gaseous fuel includes, but is not limited to, natural gas, process gas, landfill gas, coal derived gas, refinery gas, and biogas. Blast furnace gas and process gases that are regulated under another subpart of this part, or part 60, part 61, or part 65 of this chapter, are exempted from this definition.

Heat input means heat derived from combustion of fuel in a boiler or process heater and does not include the heat input from preheated combustion air, recirculated flue gases, returned condensate, or exhaust gases from other sources such as gas turbines, internal combustion engines, kilns, etc.

Heavy liquid includes residual oil and any other liquid fuel not classified as a light liquid.

Hourly average means the arithmetic average of at least four CMS data values representing the four 15-minute periods in an hour, or at least two 15-minute data values during an hour when CMS calibration, quality assurance, or maintenance activities are being performed.

Hot water heater means a closed vessel with a capacity of no more than 120 U.S. gallons in which water is heated by combustion of gaseous, liquid, or biomass/bio-based solid fuel and is withdrawn for use external to the vessel. Hot water boilers (i.e., not generating steam) combusting gaseous, liquid, or biomass fuel with a heat input capacity of less than 1.6 million Btu per hour are included in this definition. The 120 U.S. gallon capacity threshold to be considered a hot water heater is independent of the 1.6 MMBtu/hr heat input capacity threshold for hot water boilers. Hot water heater also means a tankless unit that provides on demand hot water.

Hybrid suspension grate boiler means a boiler designed with air distributors to spread the fuel material over the entire width and depth of the boiler combustion zone. The biomass fuel combusted in these units exceeds a moisture content of 40 percent on an as-fired annual heat input basis. The drying and much of the combustion of the fuel takes place in suspension, and the combustion is completed on the grate or floor of the boiler. Fluidized bed, dutch oven, and pile burner designs are not part of the hybrid suspension grate boiler design category.

Industrial boiler means a boiler used in manufacturing, processing, mining, and refining or any other industry to provide steam, hot water, and/or electricity.

Light liquid includes distillate oil, biodiesel, or vegetable oil.

Limited-use boiler or process heater means any boiler or process heater that burns any amount of solid, liquid, or gaseous fuels and has a federally enforceable average annual capacity factor of no more than 10 percent.

Liquid fuel includes, but is not limited to, light liquid, heavy liquid, any form of liquid fuel derived from petroleum, used oil, liquid biofuels, biodiesel, vegetable oil, and comparable fuels as defined under 40 CFR 261.38.

Load fraction means the actual heat input of a boiler or process heater divided by heat input during the performance test that established the minimum sorbent injection rate or minimum activated carbon injection rate, expressed as a fraction (e.g., for 50 percent load the load fraction is 0.5).

Major source for oil and natural gas production facilities, as used in this subpart, shall have the same meaning as in § 63.2, except that:

(1) Emissions from any oil or gas exploration or production well (with its associated equipment, as defined in this section), and emissions from any pipeline compressor station or pump station shall not be aggregated with emissions from other similar units to determine whether such emission points or stations are major sources, even when emission points are in a contiguous area or under common control;

(2) Emissions from processes, operations, or equipment that are not part of the same facility, as defined in this section, shall not be aggregated; and

(3) For facilities that are production field facilities, only HAP emissions from glycol dehydration units and storage vessels with the potential for flash emissions shall be aggregated for a major source determination. For facilities that are not production field facilities, HAP emissions from all HAP emission units shall be aggregated for a major source determination.

Metal process furnaces are a subcategory of process heaters, as defined in this subpart, which include natural gas-fired annealing furnaces, preheat furnaces, reheat furnaces, aging furnaces, heat treat furnaces, and homogenizing furnaces.

Million Btu (MMBtu) means one million British thermal units.

Minimum activated carbon injection rate means load fraction multiplied by the lowest hourly average activated carbon injection rate measured according to Table 7 to this subpart during the most recent performance test demonstrating compliance with the applicable emission limit.

Minimum oxygen level means the lowest hourly average oxygen level measured according to Table 7 to this subpart during the most recent performance test demonstrating compliance with the applicable emission limit.

Minimum pressure drop means the lowest hourly average pressure drop measured according to Table 7 to this subpart during the most recent performance test demonstrating compliance with the applicable emission limit.

Minimum scrubber effluent pH means the lowest hourly average sorbent liquid pH measured at the inlet to the wet scrubber according to Table 7 to this subpart during the most recent performance test demonstrating compliance with the applicable hydrogen chloride emission limit.

Minimum scrubber liquid flow rate means the lowest hourly average liquid flow rate (e.g., to the PM scrubber or to the acid gas scrubber) measured according to Table 7 to this subpart during the most recent performance stack test demonstrating compliance with the applicable emission limit.

Minimum scrubber pressure drop means the lowest hourly average scrubber pressure drop measured according to Table 7 to this subpart during the most recent performance test demonstrating compliance with the applicable emission limit.

Minimum sorbent injection rate means:

(1) The load fraction multiplied by the lowest hourly average sorbent injection rate for each sorbent measured according to Table 7 to this subpart during the most recent performance test demonstrating compliance with the applicable emission limits; or

(2) For fluidized bed combustion, the lowest average ratio of sorbent to sulfur measured during the most recent performance test.

Minimum total secondary electric power means the lowest hourly average total secondary electric power determined from the values of secondary voltage and secondary current to the electrostatic precipitator measured according to Table 7 to this subpart during the most recent performance test demonstrating compliance with the applicable emission limits.

Natural gas means:

(1) A naturally occurring mixture of hydrocarbon and nonhydrocarbon gases found in geologic formations beneath the earth's surface, of which the principal constituent is methane; or

(2) Liquefied petroleum gas, as defined in ASTM D1835 (incorporated by reference, see § 63.14); or

(3) A mixture of hydrocarbons that maintains a gaseous state at ISO conditions. Additionally, natural gas must either be composed of at least 70 percent methane by volume or have a gross calorific value between 35 and 41 megajoules (MJ) per dry standard cubic meter (950 and 1,100 Btu per dry standard cubic foot); or

(4) Propane or propane derived synthetic natural gas. Propane means a colorless gas derived from petroleum and natural gas, with the molecular structure $C_3 H_8$.

Opacity means the degree to which emissions reduce the transmission of light and obscure the view of an object in the background.

Operating day means a 24-hour period between 12 midnight and the following midnight during which any fuel is combusted at any time in the boiler or process heater unit. It is not necessary for fuel to be combusted for the entire 24-hour period.

Other combustor means a unit designed to burn solid fuel that is not classified as a dutch oven, fluidized bed, fuel cell, hybrid suspension grate boiler, pulverized coal boiler, stoker, sloped grate, or suspension boiler as defined in this subpart.

Other gas 1 fuel means a gaseous fuel that is not natural gas or refinery gas and does not exceed a maximum concentration of 40 micrograms/cubic meters of mercury.

Oxygen analyzer system means all equipment required to determine the oxygen content of a gas stream and used to monitor oxygen in the boiler or process heater flue gas, boiler or process heater, firebox, or other appropriate location. This definition includes oxygen trim systems. The source owner or operator must install, calibrate, maintain, and operate the oxygen analyzer system in accordance with the manufacturer's recommendations.

Oxygen trim system means a system of monitors that is used to maintain excess air at the desired level in a combustion device. A typical system consists of a flue gas oxygen and/or CO monitor that automatically provides a feedback signal to the combustion air controller.

Particulate matter (PM) means any finely divided solid or liquid material, other than uncombined water, as measured by the test methods specified under this subpart, or an approved alternative method.

Period of gas curtailment or supply interruption means a period of time during which the supply of gaseous fuel to an affected boiler or process heater is restricted or halted for reasons beyond the control of the facility. The act of entering into a contractual agreement with a supplier of natural gas established for curtailment purposes does not constitute a reason that is under the control of a facility for the purposes of this definition. An increase in the cost or unit price of natural gas due to normal market fluctuations not during periods of supplier delivery restriction does not constitute a period of natural gas curtailment or supply interruption. On-site gaseous fuel system emergencies or equipment failures qualify as periods of supply interruption when the emergency or failure is beyond the control of the facility.

Pile burner means a boiler design incorporating a design where the anticipated biomass fuel has a high relative moisture content. Grates serve to support the fuel, and underfire air flowing up through the grates provides oxygen for combustion, cools the grates, promotes turbulence in the fuel bed, and fires the fuel. The most common form of pile burning is the dutch oven.

Process heater means an enclosed device using controlled flame, and the unit's primary purpose is to transfer heat indirectly to a process material (liquid, gas, or solid) or to a heat transfer material (e.g., glycol or a mixture of glycol and water) for use in a process unit, instead of generating steam. Process heaters are devices in which the combustion gases do not come into direct contact with process materials. A device combusting solid waste, as defined in § 241.3 of this chapter, is not a process heater unless the device is exempt from the definition of a solid waste incineration unit as provided in section 129(g)(1) of the Clean Air Act. Process heaters do not include units used for comfort heat or space heat, food preparation for on-site consumption, or autoclaves. Waste heat process heaters are excluded from this definition.

Pulverized coal boiler means a boiler in which pulverized coal or other solid fossil fuel is introduced into an air stream that carries the coal to the combustion chamber of the boiler where it is fired in suspension.

Qualified energy assessor means:

(1) Someone who has demonstrated capabilities to evaluate energy savings opportunities for steam generation and major energy using systems, including, but not limited to:

(i) Boiler combustion management.

(ii) Boiler thermal energy recovery, including

(A) Conventional feed water economizer,

(B) Conventional combustion air preheater, and

(C) Condensing economizer.

(iii) Boiler blowdown thermal energy recovery.

(iv) Primary energy resource selection, including

(A) Fuel (primary energy source) switching, and

(B) Applied steam energy versus direct-fired energy versus electricity.

(v) Insulation issues.

(vi) Steam trap and steam leak management.

(vi) Condensate recovery.

(viii) Steam end-use management.

(2) Capabilities and knowledge includes, but is not limited to:

(i) Background, experience, and recognized abilities to perform the assessment activities, data analysis, and report preparation.

(ii) Familiarity with operating and maintenance practices for steam or process heating systems.

(iii) Additional potential steam system improvement opportunities including improving steam turbine operations and reducing steam demand.

(iv) Additional process heating system opportunities including effective utilization of waste heat and use of proper process heating methods.

(v) Boiler-steam turbine cogeneration systems.

(vi) Industry specific steam end-use systems.

Refinery gas means any gas that is generated at a petroleum refinery and is combusted. Refinery gas includes natural gas when the natural gas is combined and combusted in any proportion with a gas generated at a refinery. Refinery gas includes gases generated from other facilities when that gas is combined and combusted in any proportion with gas generated at a refinery.

Regulated gas stream means an offgas stream that is routed to a boiler or process heater for the purpose of achieving compliance with a standard under another subpart of this part or part 60, part 61, or part 65 of this chapter.

Residential boiler means a boiler used to provide heat and/or hot water and/or as part of a residential combined heat and power system. This definition includes boilers located at an institutional facility (e.g., university campus, military base, church grounds) or commercial/industrial facility (e.g., farm) used primarily to provide heat and/or hot water for:

(1) A dwelling containing four or fewer families; or

(2) A single unit residence dwelling that has since been converted or subdivided into condominiums or apartments.

Residual oil means crude oil, fuel oil that does not comply with the specifications under the definition of distillate oil, and all fuel oil numbers 4, 5, and 6, as defined by the American Society of Testing and Materials in ASTM D396-10 (incorporated by reference, *see* § 63.14(b)).

Responsible official means responsible official as defined in § 70.2.

Secondary material means the material as defined in § 241.2 of this chapter.

Shutdown means the cessation of operation of a boiler or process heater for any purpose. Shutdown begins either when none of the steam from the boiler is supplied for heating and/or producing electricity, or for any other purpose, or at the point of no fuel being fired in the boiler or process heater, whichever is earlier. Shutdown ends when there is no steam and no heat being supplied and no fuel being fired in the boiler or process heater.

Sloped grate means a unit where the solid fuel is fed to the top of the grate from where it slides downwards; while sliding the fuel first dries and then ignites and burns. The ash is deposited at the bottom of the grate. Fluidized bed, dutch oven, pile burner, hybrid suspension grate, suspension burners, and fuel cells are not considered to be a sloped grate design.

Solid fossil fuel includes, but is not limited to, coal, coke, petroleum coke, and tire derived fuel.

Solid fuel means any solid fossil fuel or biomass or bio-based solid fuel.

Startup means either the first-ever firing of fuel in a boiler or process heater for the purpose of supplying steam or heat for heating and/or producing electricity, or for any other purpose, or the firing of fuel in a boiler after a shutdown event for any purpose. Startup ends when any of the steam or heat from the boiler or process heater is supplied for heating, and/or producing electricity, or for any other purpose.

Steam output means:

(1) For a boiler that produces steam for process or heating only (no power generation), the energy content in terms of MMBtu of the boiler steam output,

(2) For a boiler that cogenerates process steam and electricity (also known as combined heat and power), the total energy output, which is the sum of the energy content of the steam exiting the turbine and sent to process in MMBtu and the energy of the electricity generated converted to MMBtu at a rate of 10,000 Btu per kilowatt-hour generated (10 MMBtu per megawatt-hour), and

(3) For a boiler that generates only electricity, the alternate output-based emission limits would be calculated using Equations 21 through 25 of this section, as appropriate:

(i) For emission limits for boilers in the unit designed to burn solid fuel subcategory use Equation 21 of this section:

$$EL_{OBE} = EL_T \times 12.7 \text{ MMBtu/Mwh} \quad \text{(Eq. 21)}$$

Where:

EL_{OBE} = Emission limit in units of pounds per megawatt-hour.

EL_T = Appropriate emission limit from Table 1 or 2 of this subpart in units of pounds per million Btu heat input.

(ii) For PM and CO emission limits for boilers in one of the subcategories of units designed to burn coal use Equation 22 of this section:

$$EL_{OBE} = EL_T \times 12.2 \text{ MMBtu/Mwh} \quad \text{(Eq. 22)}$$

Where:

EL_{OBE} = Emission limit in units of pounds per megawatt-hour.

EL_T = Appropriate emission limit from Table 1 or 2 of this subpart in units of pounds per million Btu heat input.

(iii) For PM and CO emission limits for boilers in one of the subcategories of units designed to burn biomass use Equation 23 of this section:

$$EL_{OBE} = EL_T \times 13.9 \text{ MMBtu/Mwh} \quad \text{(Eq. 23)}$$

Where:

EL_{OBE} = Emission limit in units of pounds per megawatt-hour.

EL_T = Appropriate emission limit from Table 1 or 2 of this subpart in units of pounds per million Btu heat input.

(iv) For emission limits for boilers in one of the subcategories of units designed to burn liquid fuels use Equation 24 of this section:

$$EL_{OBE} = EL_T \times 13.8 \text{ MMBtu/Mwh} \quad \text{(Eq. 24)}$$

Where:

EL_{OBE} = Emission limit in units of pounds per megawatt-hour.

EL_T = Appropriate emission limit from Table 1 or 2 of this subpart in units of pounds per million Btu heat input.

(v) For emission limits for boilers in the unit designed to burn gas 2 (other) subcategory, use Equation 25 of this section:

$$EL_{OBE} = EL_T \times 10.4 \text{ MMBtu/Mwh} \quad \text{(Eq. 25)}$$

Where:

EL_{OBE} = Emission limit in units of pounds per megawatt-hour.

EL_T = Appropriate emission limit from Table 1 or 2 of this subpart in units of pounds per million Btu heat input.

Stoker means a unit consisting of a mechanically operated fuel feeding mechanism, a stationary or moving grate to support the burning of fuel and admit under-grate air to the fuel, an overfire air system to complete combustion, and an ash discharge system. This definition of stoker includes air swept stokers. There are two general types of stokers: Underfeed and overfeed. Overfeed stokers include mass feed and spreader stokers. Fluidized bed, dutch oven, pile burner, hybrid suspension grate, suspension burners, and fuel cells are not considered to be a stoker design.

Stoker/sloped grate/other unit designed to burn kiln dried biomass means the unit is in the units designed to burn biomass/bio-based solid subcategory that is either a stoker, sloped grate, or other combustor design and is not in the stoker/sloped grate/other units designed to burn wet biomass subcategory.

Stoker/sloped grate/other unit designed to burn wet biomass means the unit is in the units designed to burn biomass/bio-based solid subcategory that is either a stoker, sloped grate, or other combustor design and any of the biomass/bio-based solid fuel combusted in the unit exceeds 20 percent moisture on an annual heat input basis.

Suspension burner means a unit designed to fire dry biomass/biobased solid particles in suspension that are conveyed in an airstream to the furnace like pulverized coal. The combustion of the fuel material is completed on a grate or floor below. The biomass/biobased fuel combusted in the unit shall not exceed 20 percent moisture on an annual heat input basis. Fluidized bed, dutch oven, pile burner, and hybrid suspension grate units are not part of the suspension burner subcategory.

Temporary boiler means any gaseous or liquid fuel boiler that is designed to, and is capable of, being carried or moved from one location to another by means of, for example, wheels, skids, carrying handles, dollies, trailers, or platforms. A boiler is not a temporary boiler if any one of the following conditions exists:

(1) The equipment is attached to a foundation.

(2) The boiler or a replacement remains at a location within the facility and performs the same or similar function for more than 12 consecutive months, unless the regulatory agency approves an extension. An extension may be granted by the regulating agency upon petition by the owner or operator of a unit specifying the basis for such a request. Any temporary boiler that replaces a temporary boiler at a location and performs the same or similar function will be included in calculating the consecutive time period.

(3) The equipment is located at a seasonal facility and operates during the full annual operating period of the seasonal facility, remains at the facility for at least 2 years, and operates at that facility for at least 3 months each year.

(4) The equipment is moved from one location to another within the facility but continues to perform the same or similar function and serve the same electricity, steam, and/or hot water system in an attempt to circumvent the residence time requirements of this definition.

Total selected metals (TSM) means the sum of the following metallic hazardous air pollutants: arsenic, beryllium, cadmium, chromium, lead, manganese, nickel and selenium.

Traditional fuel means the fuel as defined in § 241.2 of this chapter.

Tune-up means adjustments made to a boiler or process heater in accordance with the procedures outlined in § 63.7540(a)(10).

Ultra low sulfur liquid fuel means a distillate oil that has less than or equal to 15 ppm sulfur.

Unit designed to burn biomass/bio-based solid subcategory includes any boiler or process heater that burns at least 10 percent biomass or bio-based solids on an annual heat input basis in combination with solid fossil fuels, liquid fuels, or gaseous fuels.

Unit designed to burn coal/solid fossil fuel subcategory includes any boiler or process heater that burns any coal or other solid fossil fuel alone or at least 10 percent coal or other solid fossil fuel on an annual heat input basis in combination with liquid fuels, gaseous fuels, or less than 10 percent biomass and bio-based solids on an annual heat input basis.

Unit designed to burn gas 1 subcategory includes any boiler or process heater that burns only natural gas, refinery gas, and/or other gas 1 fuels. Gaseous fuel boilers and process heaters that burn liquid fuel for periodic testing of liquid fuel, maintenance, or operator training, not to exceed a combined total of 48 hours during any calendar year, are included in this definition. Gaseous fuel boilers and process heaters that burn liquid fuel during periods of gas curtailment or gas supply interruptions of any duration are also included in this definition.

Unit designed to burn gas 2 (other) subcategory includes any boiler or process heater that is not in the unit designed to burn gas 1 subcategory and burns any gaseous fuels either alone or in combination with less than 10 percent coal/solid fossil fuel, and less than 10 percent biomass/bio-based solid fuel on an annual heat input basis, and no liquid fuels. Gaseous fuel boilers and process heaters that are not in the unit designed to burn gas 1 subcategory and that burn liquid fuel for periodic testing of liquid fuel, maintenance, or operator training, not to exceed a combined total of 48 hours during any calendar year, are included in this definition. Gaseous fuel boilers and process heaters that are not in the unit designed to burn gas 1 subcategory and that burn liquid fuel during periods of gas curtailment or gas supply interruption of any duration are also included in this definition.

Unit designed to burn heavy liquid subcategory means a unit in the unit designed to burn liquid subcategory where at least 10 percent of the heat input from liquid fuels on an annual heat input basis comes from heavy liquids.

Unit designed to burn light liquid subcategory means a unit in the unit designed to burn liquid subcategory that is not part of the unit designed to burn heavy liquid subcategory.

Unit designed to burn liquid subcategory includes any boiler or process heater that burns any liquid fuel, but less than 10 percent coal/solid fossil fuel and less than 10 percent biomass/bio-based solid fuel on an annual heat input basis, either alone or in combination with gaseous fuels. Units in the unit design to burn gas 1 or unit designed to burn gas 2 (other) subcategories that burn liquid fuel for periodic testing of liquid fuel, maintenance, or operator training, not to exceed a combined total of 48 hours during any calendar year are not included in this definition. Units in the unit design to burn gas 1 or unit designed to burn gas 2 (other) subcategories during periods of gas curtailment or gas supply interruption of any duration are also not included in this definition.

Unit designed to burn liquid fuel that is a non-continental unit means an industrial, commercial, or institutional boiler or process heater meeting the definition of the unit designed to burn liquid subcategory located in the State of Hawaii, the Virgin Islands, Guam, American Samoa, the Commonwealth of Puerto Rico, or the Northern Mariana Islands.

Unit designed to burn solid fuel subcategory means any boiler or process heater that burns only solid fuels or at least 10 percent solid fuel on an annual heat input basis in combination with liquid fuels or gaseous fuels.

Vegetable oil means oils extracted from vegetation.

Voluntary Consensus Standards or VCS mean technical standards (*e.g.,* materials specifications, test methods, sampling procedures, business practices) developed or adopted by one or more voluntary consensus bodies. EPA/Office of Air Quality Planning and Standards, by precedent, has only used VCS that are written in English. Examples of VCS bodies are: American Society of Testing and Materials (ASTM 100 Barr Harbor Drive, P.O. Box CB700, West Conshohocken, Pennsylvania 19428-B2959, (800) 262-1373, *http://www.astm.org*), American Society of Mechanical Engineers (ASME ASME, Three Park Avenue, New York, NY 10016-5990, (800) 843-2763, *http://www.asme.org*), International Standards Organization (ISO 1, ch. de la Voie-Creuse, Case postale 56, CH-1211 Geneva 20, Switzerland, +41 22 749 01 11, *http://www.iso.org/iso/home.htm*), Standards Australia (AS Level 10, The Exchange Centre, 20 Bridge Street, Sydney, GPO Box 476, Sydney NSW 2001, + 61 2 9237 6171 *http://www.stadards.org.au*), British Standards Institution (BSI, 389 Chiswick High Road, London, W4 4AL, United Kingdom, +44 (0)20 8996 9001, *http://www.bsigroup.com*), Canadian Standards Association (CSA 5060 Spectrum Way, Suite 100, Mississauga, Ontario L4W 5N6, Canada, 800-463-6727, *http://www.csa.ca*), European Committee for Standardization (CEN CENELEC Management Centre Avenue Marnix 17 B-1000 Brussels, Belgium +32 2 550 08 11, *http://www.cen.eu/cen*), and German Engineering Standards (VDI VDI Guidelines Department, P.O. Box 10 11 39 40002, Duesseldorf, Germany, +49 211 6214-230, *http://www.vdi.eu*). The types of standards that are not considered VCS are standards developed by: The United States, *e.g.,* California (CARB) and Texas (TCEQ); industry groups, such as American Petroleum Institute (API), Gas Processors Association (GPA), and Gas Research Institute (GRI); and other branches of the U.S. government, *e.g.,* Department of Defense (DOD) and Department of Transportation (DOT). This does not preclude EPA from using standards developed by groups that are not VCS bodies within their rule. When this occurs, EPA has done searches and reviews for VCS equivalent to these non-EPA methods.

Waste heat boiler means a device that recovers normally unused energy (i.e., hot exhaust gas) and converts it to usable heat. Waste heat boilers are also referred to as heat recovery steam generators. Waste heat boilers are heat exchangers generating steam from incoming hot exhaust gas from an industrial (e.g., thermal oxidizer, kiln, furnace) or power (e.g., combustion turbine, engine) equipment. Duct burners are sometimes used to increase the temperature of the incoming hot exhaust gas.

Waste heat process heater means an enclosed device that recovers normally unused energy (i.e., hot exhaust gas) and converts it to usable heat. Waste heat process heaters are also referred to as recuperative process heaters. This definition includes both fired and unfired waste heat process heaters.

Wet scrubber means any add-on air pollution control device that mixes an aqueous stream or slurry with the exhaust gases from a boiler or process heater to control emissions of particulate matter or to absorb and neutralize acid gases, such as hydrogen chloride. A wet scrubber creates an aqueous stream or slurry as a byproduct of the emissions control process.

Work practice standard means any design, equipment, work practice, or operational standard, or combination thereof, that is promulgated pursuant to section 112(h) of the Clean Air Act.

[78 FR 15664, Mar. 21, 2011, as amended at 78 FR 7163, Jan. 31, 2013]

Table 1 to Subpart DDDDD of Part 63—Emission Limits for New or Reconstructed Boilers and Process Heaters

As stated in § 63.7500, you must comply with the following applicable emission limits:

[Units with heat input capacity of 10 million Btu per hour or greater]

If your boiler or process heater is in this subcategory . . .	For the following pollutants . . .	The emissions must not exceed the following emission limits, except during startup and shutdown . . .	Or the emissions must not exceed the following alternative output-based limits, except during startup and shutdown . . .	Using this specified sampling volume or test run duration . . .
1. Units in all subcategories designed to burn solid fuel.	a. HCl	2.2E-02 lb per MMBtu of heat input	2.5E-02 lb per MMBtu of steam output or 0.28 lb per MWh	For M26A, collect a minimum of 1 dscm per run; for M26 collect a minimum of 120 liters per run.
	b. Mercury	8.0E-07 [a]lb per MMBtu of heat input	8.7E-07 [a]lb per MMBtu of steam output or 1.1E-05 [a]lb per MWh	For M29, collect a minimum of 4 dscm per run; for M30A or M30B, collect a minimum sample as specified in the method; for ASTM D6784 [b]collect a minimum of 4 dscm.
2. Units designed to burn coal/solid fossil fuel	a. Filterable PM (or TSM)	1.1E-03 lb per MMBtu of heat input; or (2.3E-05 lb per MMBtu of heat input)	1.1E-03 lb per MMBtu of steam output or 1.4E-02 lb per MWh; or (2.7E-05 lb per MMBtu of steam output or 2.9E-04 lb per MWh)	Collect a minimum of 3 dscm per run.
3. Pulverized coal boilers designed to burn coal/solid fossil fuel	a. Carbon monoxide (CO) (or CEMS)	130 ppm by volume on a dry basis corrected to 3 percent oxygen, 3-run average; or (320 ppm by volume on a dry basis corrected to 3 percent oxygen, 30-day rolling average)	0.11 lb per MMBtu of steam output or 1.4 lb per MWh; 3-run average	1 hr minimum sampling time.
4. Stokers designed to burn coal/solid fossil fuel	a. CO (or CEMS)	130 ppm by volume on a dry basis corrected to 3 percent oxygen, 3-run average; or (340 ppm by volume on a dry basis corrected to 3 percent oxygen, 30-day rolling average)	0.12 lb per MMBtu of steam output or 1.4 lb per MWh; 3-run average	1 hr minimum sampling time.
5. Fluidized bed units designed to burn coal/solid fossil fuel	a. CO (or CEMS)	130 ppm by volume on a dry basis corrected to 3 percent oxygen, 3-run average; or (230 ppm by volume on a dry basis corrected to 3 percent oxygen, 30-day rolling average)	0.11 lb per MMBtu of steam output or 1.4 lb per MWh; 3-run average	1 hr minimum sampling time.

If your boiler or process heater is in this subcategory . . .	For the following pollutants . . .	The emissions must not exceed the following emission limits, except during startup and shutdown . . .	Or the emissions must not exceed the following alternative output-based limits, except during startup and shutdown . . .	Using this specified sampling volume or test run duration . . .
6. Fluidized bed units with an integrated heat exchanger designed to burn coal/solid fossil fuel	a. CO (or CEMS)	140 ppm by volume on a dry basis corrected to 3 percent oxygen, 3-run average; or (150 ppm by volume on a dry basis corrected to 3 percent oxygen, 30-day rolling average)	1.2E-01 lb per MMBtu of steam output or 1.5 lb per MWh; 3-run average	1 hr minimum sampling time.
7. Stokers/sloped grate/others designed to burn wet biomass fuel	a. CO (or CEMS)	620 ppm by volume on a dry basis corrected to 3 percent oxygen, 3-run average; or (390 ppm by volume on a dry basis corrected to 3 percent oxygen, 30-day rolling average)	5.8E-01 lb per MMBtu of steam output or 6.8 lb per MWh; 3-run average	1 hr minimum sampling time.
	b. Filterable PM (or TSM)	3.0E-02 lb per MMBtu of heat input; or (2.6E-05 lb per MMBtu of heat input)	3.5E-02 lb per MMBtu of steam output or 4.2E-01 lb per MWh; or (2.7E-05 lb per MMBtu of steam output or 3.7E-04 lb per MWh)	Collect a minimum of 2 dscm per run.
8. Stokers/sloped grate/others designed to burn kiln-dried biomass fuel	a. CO	460 ppm by volume on a dry basis corrected to 3 percent oxygen	4.2E-01 lb per MMBtu of steam output or 5.1 lb per MWh	1 hr minimum sampling time.
	b. Filterable PM (or TSM)	3.0E-02 lb per MMBtu of heat input; or (4.0E-03 lb per MMBtu of heat input)	3.5E-02 lb per MMBtu of steam output or 4.2E-01 lb per MWh; or (4.2E-03 lb per MMBtu of steam output or 5.6E-02 lb per MWh)	Collect a minimum of 2 dscm per run.
9. Fluidized bed units designed to burn biomass/bio-based solids	a. CO (or CEMS)	230 ppm by volume on a dry basis corrected to 3 percent oxygen, 3-run average; or (310 ppm by volume on a dry basis corrected to 3 percent oxygen, 30-day rolling average)	2.2E-01 lb per MMBtu of steam output or 2.6 lb per MWh; 3-run average	1 hr minimum sampling time.
	b. Filterable PM (or TSM)	9.8E-03 lb per MMBtu of heat input; or (8.3E-05 [a]lb per MMBtu of heat input)	1.2E-02 lb per MMBtu of steam output or 0.14 lb per MWh; or (1.1E-04 [a]lb per MMBtu of steam output or 1.2E-03 [a]lb per MWh)	Collect a minimum of 3 dscm per run.

If your boiler or process heater is in this subcategory . . .	For the following pollutants . . .	The emissions must not exceed the following emission limits, except during startup and shutdown . . .	Or the emissions must not exceed the following alternative output-based limits, except during startup and shutdown . . .	Using this specified sampling volume or test run duration . . .
10. Suspension burners designed to burn biomass/bio-based solids	a. CO (or CEMS)	2,400 ppm by volume on a dry basis corrected to 3 percent oxygen, 3-run average; or (2,000 ppm by volume on a dry basis corrected to 3 percent oxygen, 10-day rolling average)	1.9 lb per MMBtu of steam output or 27 lb per MWh; 3-run average	1 hr minimum sampling time.
	b. Filterable PM (or TSM)	3.0E-02 lb per MMBtu of heat input; or (6.5E-03 lb per MMBtu of heat input)	3.1E-02 lb per MMBtu of steam output or 4.2E-01 lb per MWh; or (6.6E-03 lb per MMBtu of steam output or 9.1E-02 lb per MWh)	Collect a minimum of 2 dscm per run.
11. Dutch Ovens/Pile burners designed to burn biomass/bio-based solids	a. CO (or CEMS)	330 ppm by volume on a dry basis corrected to 3 percent oxygen, 3-run average; or (520 ppm by volume on a dry basis corrected to 3 percent oxygen, 10-day rolling average)	3.5E-01 lb per MMBtu of steam output or 3.6 lb per MWh; 3-run average	1 hr minimum sampling time.
	b. Filterable PM (or TSM)	3.2E-03 lb per MMBtu of heat input; or (3.9E-05 lb per MMBtu of heat input)	4.3E-03 lb per MMBtu of steam output or 4.5E-02 lb per MWh; or (5.2E-05 lb per MMBtu of steam output or 5.5E-04 lb per MWh)	Collect a minimum of 3 dscm per run.
12. Fuel cell units designed to burn biomass/bio-based solids	a. CO	910 ppm by volume on a dry basis corrected to 3 percent oxygen	1.1 lb per MMBtu of steam output or 1.0E+01 lb per MWh	1 hr minimum sampling time.
	b. Filterable PM (or TSM)	2.0E-02 lb per MMBtu of heat input; or (2.9E-05 [a]lb per MMBtu of heat input)	3.0E-02 lb per MMBtu of steam output or 2.8E-01 lb per MWh; or (5.1E-05 lb per MMBtu of steam output or 4.1E-04 lb per MWh)	Collect a minimum of 2 dscm per run.
13. Hybrid suspension grate boiler designed to burn biomass/bio-based solids	a. CO (or CEMS)	1,100 ppm by volume on a dry basis corrected to 3 percent oxygen, 3-run average; or (900 ppm by volume on a dry basis corrected to 3 percent oxygen, 30-day rolling average)	1.4 lb per MMBtu of steam output or 12 lb per MWh; 3-run average	1 hr minimum sampling time.

If your boiler or process heater is in this subcategory . . .	For the following pollutants . . .	The emissions must not exceed the following emission limits, except during startup and shutdown . . .	Or the emissions must not exceed the following alternative output-based limits, except during startup and shutdown . . .	Using this specified sampling volume or test run duration . . .
	b. Filterable PM (or TSM)	2.6E-02 lb per MMBtu of heat input; or (4.4E-04 lb per MMBtu of heat input)	3.3E-02 lb per MMBtu of steam output or 3.7E-01 lb per MWh; or (5.5E-04 lb per MMBtu of steam output or 6.2E-03 lb per MWh)	Collect a minimum of 3 dscm per run.
14. Units designed to burn liquid fuel	a. HCl	4.4E-04 lb per MMBtu of heat input	4.8E-04 lb per MMBtu of steam output or 6.1E-03 lb per MWh	For M26A: Collect a minimum of 2 dscm per run; for M26, collect a minimum of 240 liters per run.
	b. Mercury	4.8E-07 [a]lb per MMBtu of heat input	5.3E-07 [a]lb per MMBtu of steam output or 6.7E-06 [a]lb per MWh	For M29, collect a minimum of 4 dscm per run; for M30A or M30B, collect a minimum sample as specified in the method; for ASTM D6784 [b]collect a minimum of 4 dscm.
15. Units designed to burn heavy liquid fuel	a. CO	130 ppm by volume on a dry basis corrected to 3 percent oxygen, 3-run average	0.13 lb per MMBtu of steam output or 1.4 lb per MWh; 3-run average	1 hr minimum sampling time.
	b. Filterable PM (or TSM)	1.3E-02 lb per MMBtu of heat input; or (7.5E-05 lb per MMBtu of heat input)	1.5E-02 lb per MMBtu of steam output or 1.8E-01 lb per MWh; or (8.2E-05 lb per MMBtu of steam output or 1.1E-03 lb per MWh)	Collect a minimum of 3 dscm per run.
16. Units designed to burn light liquid fuel	a. CO	130 ppm by volume on a dry basis corrected to 3 percent oxygen	0.13 lb per MMBtu of steam output or 1.4 lb per MWh	1 hr minimum sampling time.
	b. Filterable PM (or TSM)	1.1E-03 [a]lb per MMBtu of heat input; or (2.9E-05 lb per MMBtu of heat input)	1.2E-03 [a]lb per MMBtu of steam output or 1.6E-02 [a]lb per MWh; or (3.2E-05 lb per MMBtu of steam output or 4.0E-04 lb per MWh)	Collect a minimum of 3 dscm per run.
17. Units designed to burn liquid fuel that are non-continental units	a. CO	130 ppm by volume on a dry basis corrected to 3 percent oxygen, 3-run average based on stack test	0.13 lb per MMBtu of steam output or 1.4 lb per MWh; 3-run average	1 hr minimum sampling time.
	b. Filterable PM (or TSM)	2.3E-02 lb per MMBtu of heat input; or (8.6E-04 lb per MMBtu of heat input)	2.5E-02 lb per MMBtu of steam output or 3.2E-01 lb per MWh; or (9.4E-04 lb per MMBtu of steam output or 1.2E-02 lb per MWh)	Collect a minimum of 4 dscm per run.

If your boiler or process heater is in this subcategory . . .	For the following pollutants . . .	The emissions must not exceed the following emission limits, except during startup and shutdown . . .	Or the emissions must not exceed the following alternative output-based limits, except during startup and shutdown . . .	Using this specified sampling volume or test run duration . . .
18. Units designed to burn gas 2 (other) gases	a. CO	130 ppm by volume on a dry basis corrected to 3 percent oxygen	0.16 lb per MMBtu of steam output or 1.0 lb per MWh	1 hr minimum sampling time.
	b. HCl	1.7E-03 lb per MMBtu of heat input	2.9E-03 lb per MMBtu of steam output or 1.8E-02 lb per MWh	For M26A, Collect a minimum of 2 dscm per run; for M26, collect a minimum of 240 liters per run.
	c. Mercury	7.9E-06 lb per MMBtu of heat input	1.4E-05 lb per MMBtu of steam output or 8.3E-05 lb per MWh	For M29, collect a minimum of 3 dscm per run; for M30A or M30B, collect a minimum sample as specified in the method; for ASTM D6784 [b]collect a minimum of 3 dscm.
	d. Filterable PM (or TSM)	6.7E-03 lb per MMBtu of heat input; or (2.1E-04 lb per MMBtu of heat input)	1.2E-02 lb per MMBtu of steam output or 7.0E-02 lb per MWh; or (3.5E-04 lb per MMBtu of steam output or 2.2E-03 lb per MWh)	Collect a minimum of 3 dscm per run.

[a] If you are conducting stack tests to demonstrate compliance and your performance tests for this pollutant for at least 2 consecutive years show that your emissions are at or below this limit, you can skip testing according to § 63.7515 if all of the other provisions of § 63.7515 are met. For all other pollutants that do not contain a footnote “a”, your performance tests for this pollutant for at least 2 consecutive years must show that your emissions are at or below 75 percent of this limit in order to qualify for skip testing.

[b] Incorporated by reference, see § 63.14.

[c] If your affected source is a new or reconstructed affected source that commenced construction or reconstruction after June 4, 2010, and before January 31, 2013, you may comply with the emission limits in Tables 11, 12 or 13 to this subpart until January 31, 2016. On and after January 31, 2016, you must comply with the emission limits in Table 1 to this subpart.

[78 FR 7193, Jan. 31, 2013]

Table 2 to Subpart DDDDD of Part 63—Emission Limits for Existing Boilers and Process Heaters

As stated in § 63.7500, you must comply with the following applicable emission limits:

[Units with heat input capacity of 10 million Btu per hour or greater]

If your boiler or process heater is in this subcategory . . .	For the following pollutants . . .	The emissions must not exceed the following emission limits, except during startup and shutdown . . .	The emissions must not exceed the following alternative output-based limits, except during startup and shutdown . . .	Using this specified sampling volume or test run duration . . .
1. Units in all subcategories designed to burn solid fuel	a. HCl	2.2E-02 lb per MMBtu of heat input	2.5E-02 lb per MMBtu of steam output or 0.27 lb per MWh	For M26A, Collect a minimum of 1 dscm per run; for M26, collect a minimum of 120 liters per run.
	b. Mercury	5.7E-06 lb per MMBtu of heat input	6.4E-06 lb per MMBtu of steam output or 7.3E-05 lb per MWh	For M29, collect a minimum of 3 dscm per run; for M30A or M30B, collect a minimum sample as specified in the method; for ASTM D6784 [b]collect a minimum of 3 dscm.
2. Units design to burn coal/solid fossil fuel	a. Filterable PM (or TSM)	4.0E-02 lb per MMBtu of heat input; or (5.3E-05 lb per MMBtu of heat input)	4.2E-02 lb per MMBtu of steam output or 4.9E-01 lb per MWh; or (5.6E-05 lb per MMBtu of steam output or 6.5E-04 lb per MWh)	Collect a minimum of 2 dscm per run.
3. Pulverized coal boilers designed to burn coal/solid fossil fuel	a. CO (or CEMS)	130 ppm by volume on a dry basis corrected to 3 percent oxygen, 3-run average; or (320 ppm by volume on a dry basis corrected to 3 percent oxygen, 30-day rolling average)	0.11 lb per MMBtu of steam output or 1.4 lb per MWh; 3-run average	1 hr minimum sampling time.
4. Stokers designed to burn coal/solid fossil fuel	a. CO (or CEMS)	160 ppm by volume on a dry basis corrected to 3 percent oxygen, 3-run average; or (340 ppm by volume on a dry basis corrected to 3 percent oxygen, 30-day rolling average)	0.14 lb per MMBtu of steam output or 1.7 lb per MWh; 3-run average	1 hr minimum sampling time.
5. Fluidized bed units designed to burn coal/solid fossil fuel	a. CO (or CEMS)	130 ppm by volume on a dry basis corrected to 3 percent oxygen, 3-run average; or (230 ppm by volume on a dry basis corrected to 3 percent oxygen, 30-day rolling average)	0.12 lb per MMBtu of steam output or 1.4 lb per MWh; 3-run average	1 hr minimum sampling time.

If your boiler or process heater is in this subcategory . . .	For the following pollutants . . .	The emissions must not exceed the following emission limits, except during startup and shutdown . . .	The emissions must not exceed the following alternative output-based limits, except during startup and shutdown . . .	Using this specified sampling volume or test run duration . . .
6. Fluidized bed units with an integrated heat exchanger designed to burn coal/solid fossil fuel	a. CO (or CEMS)	140 ppm by volume on a dry basis corrected to 3 percent oxygen, 3-run average; or (150 ppm by volume on a dry basis corrected to 3 percent oxygen, 30-day rolling average)	1.3E-01 lb per MMBtu of steam output or 1.5 lb per MWh; 3-run average	1 hr minimum sampling time.
7. Stokers/sloped grate/others designed to burn wet biomass fuel	a. CO (or CEMS)	1,500 ppm by volume on a dry basis corrected to 3 percent oxygen, 3-run average; or (720 ppm by volume on a dry basis corrected to 3 percent oxygen, 30-day rolling average)	1.4 lb per MMBtu of steam output or 17 lb per MWh; 3-run average	1 hr minimum sampling time.
	b. Filterable PM (or TSM)	3.7E-02 lb per MMBtu of heat input; or (2.4E-04 lb per MMBtu of heat input)	4.3E-02 lb per MMBtu of steam output or 5.2E-01 lb per MWh; or (2.8E-04 lb per MMBtu of steam output or 3.4E-04 lb per MWh)	Collect a minimum of 2 dscm per run.
8. Stokers/sloped grate/others designed to burn kiln-dried biomass fuel	a. CO	460 ppm by volume on a dry basis corrected to 3 percent oxygen	4.2E-01 lb per MMBtu of steam output or 5.1 lb per MWh	1 hr minimum sampling time.
	b. Filterable PM (or TSM)	3.2E-01 lb per MMBtu of heat input; or (4.0E-03 lb per MMBtu of heat input)	3.7E-01 lb per MMBtu of steam output or 4.5 lb per MWh; or (4.6E-03 lb per MMBtu of steam output or 5.6E-02 lb per MWh)	Collect a minimum of 1 dscm per run.
9. Fluidized bed units designed to burn biomass/bio-based solid	a. CO (or CEMS)	470 ppm by volume on a dry basis corrected to 3 percent oxygen, 3-run average; or (310 ppm by volume on a dry basis corrected to 3 percent oxygen, 30-day rolling average)	4.6E-01 lb per MMBtu of steam output or 5.2 lb per MWh; 3-run average	1 hr minimum sampling time.
	b. Filterable PM (or TSM)	1.1E-01 lb per MMBtu of heat input; or (1.2E-03 lb per MMBtu of heat input)	1.4E-01 lb per MMBtu of steam output or 1.6 lb per MWh; or (1.5E-03 lb per MMBtu of steam output or 1.7E-02 lb per MWh)	Collect a minimum of 1 dscm per run.

If your boiler or process heater is in this subcategory . . .	For the following pollutants . . .	The emissions must not exceed the following emission limits, except during startup and shutdown . . .	The emissions must not exceed the following alternative output-based limits, except during startup and shutdown . . .	Using this specified sampling volume or test run duration . . .
10. Suspension burners designed to burn biomass/bio-based solid	a. CO (or CEMS)	2,400 ppm by volume on a dry basis corrected to 3 percent oxygen, 3-run average; or (2,000 ppm by volume on a dry basis corrected to 3 percent oxygen, 10-day rolling average)	1.9 lb per MMBtu of steam output or 27 lb per MWh; 3-run average	1 hr minimum sampling time.
	b. Filterable PM (or TSM)	5.1E-02 lb per MMBtu of heat input; or (6.5E-03 lb per MMBtu of heat input)	5.2E-02 lb per MMBtu of steam output or 7.1E-01 lb per MWh; or (6.6E-03 lb per MMBtu of steam output or 9.1E-02 lb per MWh)	Collect a minimum of 2 dscm per run.
11. Dutch Ovens/Pile burners designed to burn biomass/bio-based solid	a. CO (or CEMS)	770 ppm by volume on a dry basis corrected to 3 percent oxygen, 3-run average; or (520 ppm by volume on a dry basis corrected to 3 percent oxygen, 10-day rolling average)	8.4E-01 lb per MMBtu of steam output or 8.4 lb per MWh; 3-run average	1 hr minimum sampling time.
	b. Filterable PM (or TSM)	2.8E-01 lb per MMBtu of heat input; or (2.0E-03 lb per MMBtu of heat input)	3.9E-01 lb per MMBtu of steam output or 3.9 lb per MWh; or (2.8E-03 lb per MMBtu of steam output or 2.8E-02 lb per MWh)	Collect a minimum of 1 dscm per run.
12. Fuel cell units designed to burn biomass/bio-based solid	a. CO	1,100 ppm by volume on a dry basis corrected to 3 percent oxygen	2.4 lb per MMBtu of steam output or 12 lb per MWh	1 hr minimum sampling time.
	b. Filterable PM (or TSM)	2.0E-02 lb per MMBtu of heat input; or (5.8E-03 lb per MMBtu of heat input)	5.5E-02 lb per MMBtu of steam output or 2.8E-01 lb per MWh; or (1.6E-02 lb per MMBtu of steam output or 8.1E-02 lb per MWh)	Collect a minimum of 2 dscm per run.
13. Hybrid suspension grate units designed to burn biomass/bio-based solid	a. CO (or CEMS)	2,800 ppm by volume on a dry basis corrected to 3 percent oxygen, 3-run average; or (900 ppm by volume on a dry basis corrected to 3 percent oxygen, 30-day rolling average)	2.8 lb per MMBtu of steam output or 31 lb per MWh; 3-run average	1 hr minimum sampling time.

If your boiler or process heater is in this subcategory . . .	For the following pollutants . . .	The emissions must not exceed the following emission limits, except during startup and shutdown . . .	The emissions must not exceed the following alternative output-based limits, except during startup and shutdown . . .	Using this specified sampling volume or test run duration . . .
	b. Filterable PM (or TSM)	4.4E-01 lb per MMBtu of heat input; or (4.5E-04 lb per MMBtu of heat input)	5.5E-01 lb per MMBtu of steam output or 6.2 lb per MWh; or (5.7E-04 lb per MMBtu of steam output or 6.3E-03 lb per MWh)	Collect a minimum of 1 dscm per run.
14. Units designed to burn liquid fuel	a. HCl	1.1E-03 lb per MMBtu of heat input	1.4E-03 lb per MMBtu of steam output or 1.6E-02 lb per MWh	For M26A, collect a minimum of 2 dscm per run; for M26, collect a minimum of 240 liters per run.
	b. Mercury	2.0E-06 lb per MMBtu of heat input	2.5E-06 lb per MMBtu of steam output or 2.8E-05 lb per MWh	For M29, collect a minimum of 3 dscm per run; for M30A or M30B collect a minimum sample as specified in the method, for ASTM D6784 [b]collect a minimum of 2 dscm.
15. Units designed to burn heavy liquid fuel	a. CO	130 ppm by volume on a dry basis corrected to 3 percent oxygen, 3-run average	0.13 lb per MMBtu of steam output or 1.4 lb per MWh; 3-run average	1 hr minimum sampling time.
	b. Filterable PM (or TSM)	6.2E-02 lb per MMBtu of heat input; or (2.0E-04 lb per MMBtu of heat input)	7.5E-02 lb per MMBtu of steam output or 8.6E-01 lb per MWh; or (2.5E-04 lb per MMBtu of steam output or 2.8E-03 lb per MWh)	Collect a minimum of 1 dscm per run.
16. Units designed to burn light liquid fuel	a. CO	130 ppm by volume on a dry basis corrected to 3 percent oxygen	0.13 lb per MMBtu of steam output or 1.4 lb per MWh	1 hr minimum sampling time.
	b. Filterable PM (or TSM)	7.9E-03 lb per MMBtu of heat input; or (6.2E-05 lb per MMBtu of heat input)	9.6E-03 lb per MMBtu of steam output or 1.1E-01 lb per MWh; or (7.5E-05 lb per MMBtu of steam output or 8.6E-04 lb per MWh)	Collect a minimum of 3 dscm per run.
17. Units designed to burn liquid fuel that are non-continental units	a. CO	130 ppm by volume on a dry basis corrected to 3 percent oxygen, 3-run average based on stack test	0.13 lb per MMBtu of steam output or 1.4 lb per MWh; 3-run average	1 hr minimum sampling time.
	b. Filterable PM (or TSM)	2.7E-01 lb per MMBtu of heat input; or (8.6E-04 lb per MMBtu of heat input)	3.3E-01 lb per MMBtu of steam output or 3.8 lb per MWh; or (1.1E-03 lb per MMBtu of steam output or 1.2E-02 lb per MWh)	Collect a minimum of 2 dscm per run.

If your boiler or process heater is in this subcategory . . .	For the following pollutants . . .	The emissions must not exceed the following emission limits, except during startup and shutdown . . .	The emissions must not exceed the following alternative output-based limits, except during startup and shutdown . . .	Using this specified sampling volume or test run duration . . .
18. Units designed to burn gas 2 (other) gases	a. CO	130 ppm by volume on a dry basis corrected to 3 percent oxygen	0.16 lb per MMBtu of steam output or 1.0 lb per MWh	1 hr minimum sampling time.
	b. HCl	1.7E-03 lb per MMBtu of heat input	2.9E-03 lb per MMBtu of steam output or 1.8E-02 lb per MWh	For M26A, collect a minimum of 2 dscm per run; for M26, collect a minimum of 240 liters per run.
	c. Mercury	7.9E-06 lb per MMBtu of heat input	1.4E-05 lb per MMBtu of steam output or 8.3E-05 lb per MWh	For M29, collect a minimum of 3 dscm per run; for M30A or M30B, collect a minimum sample as specified in the method; for ASTM D6784 [b]collect a minimum of 2 dscm.
	d. Filterable PM (or TSM)	6.7E-03 lb per MMBtu of heat input or (2.1E-04 lb per MMBtu of heat input)	1.2E-02 lb per MMBtu of steam output or 7.0E-02 lb per MWh; or (3.5E-04 lb per MMBtu of steam output or 2.2E-03 lb per MWh)	Collect a minimum of 3 dscm per run.

[a] If you are conducting stack tests to demonstrate compliance and your performance tests for this pollutant for at least 2 consecutive years show that your emissions are at or below this limit, you can skip testing according to § 63.7515 if all of the other provisions of § 63.7515 are met. For all other pollutants that do not contain a footnote a, your performance tests for this pollutant for at least 2 consecutive years must show that your emissions are at or below 75 percent of this limit in order to qualify for skip testing.

[b] Incorporated by reference, see § 63.14.

[78 FR 7195, Jan. 31, 2013]

Table 3 to Subpart DDDDD of Part 63—Work Practice Standards

As stated in § 63.7500, you must comply with the following applicable work practice standards:

If your unit is . . .	You must meet the following . . .
1. A new or existing boiler or process heater with a continuous oxygen trim system that maintains an optimum air to fuel ratio, or a heat input capacity of less than or equal to 5 million Btu per hour in any of the following subcategories: unit designed to burn gas 1; unit designed to burn gas 2 (other); or unit designed to burn light liquid, or a limited use boiler or process heater	Conduct a tune-up of the boiler or process heater every 5 years as specified in § 63.7540.

2. A new or existing boiler or process heater without a continuous oxygen trim system and with heat input capacity of less than 10 million Btu per hour in the unit designed to burn heavy liquid or unit designed to burn solid fuel subcategories; or a new or existing boiler or process heater with heat input capacity of less than 10 million Btu per hour, but greater than 5 million Btu per hour, in any of the following subcategories: unit designed to burn gas 1; unit designed to burn gas 2 (other); or unit designed to burn light liquid	Conduct a tune-up of the boiler or process heater biennially as specified in § 63.7540.
3. A new or existing boiler or process heater without a continuous oxygen trim system and with heat input capacity of 10 million Btu per hour or greater	Conduct a tune-up of the boiler or process heater annually as specified in § 63.7540. Units in either the Gas 1 or Metal Process Furnace subcategories will conduct this tune-up as a work practice for all regulated emissions under this subpart. Units in all other subcategories will conduct this tune-up as a work practice for dioxins/furans.
4. An existing boiler or process heater located at a major source facility, not including limited use units	Must have a one-time energy assessment performed by a qualified energy assessor. An energy assessment completed on or after January 1, 2008, that meets or is amended to meet the energy assessment requirements in this table, satisfies the energy assessment requirement. A facility that operates under an energy management program compatible with ISO 50001 that includes the affected units also satisfies the energy assessment requirement. The energy assessment must include the following with extent of the evaluation for items a. to e. appropriate for the on-site technical hours listed in § 63.7575:
	a. A visual inspection of the boiler or process heater system.
	b. An evaluation of operating characteristics of the boiler or process heater systems, specifications of energy using systems, operating and maintenance procedures, and unusual operating constraints.
	c. An inventory of major energy use systems consuming energy from affected boilers and process heaters and which are under the control of the boiler/process heater owner/operator.
	d. A review of available architectural and engineering plans, facility operation and maintenance procedures and logs, and fuel usage.
	e. A review of the facility's energy management practices and provide recommendations for improvements consistent with the definition of energy management practices, if identified.
	f. A list of cost-effective energy conservation measures that are within the facility's control.
	g. A list of the energy savings potential of the energy conservation measures identified.
	h. A comprehensive report detailing the ways to improve efficiency, the cost of specific improvements, benefits, and the time frame for recouping those investments.

5. An existing or new boiler or process heater subject to emission limits in Table 1 or 2 or 11 through 13 to this subpart during startup	You must operate all CMS during startup. For startup of a boiler or process heater, you must use one or a combination of the following clean fuels: natural gas, synthetic natural gas, propane, distillate oil, syngas, ultra-low sulfur diesel, fuel oil-soaked rags, kerosene, hydrogen, paper, cardboard, refinery gas, and liquefied petroleum gas.
	If you start firing coal/solid fossil fuel, biomass/bio-based solids, heavy liquid fuel, or gas 2 (other) gases, you must vent emissions to the main stack(s) and engage all of the applicable control devices except limestone injection in fluidized bed combustion (FBC) boilers, dry scrubber, fabric filter, selective non-catalytic reduction (SNCR), and selective catalytic reduction (SCR). You must start your limestone injection in FBC boilers, dry scrubber, fabric filter, SNCR, and SCR systems as expeditiously as possible. Startup ends when steam or heat is supplied for any purpose.
	You must comply with all applicable emission limits at all times except for startup or shutdown periods conforming with this work practice. You must collect monitoring data during periods of startup, as specified in § 63.7535(b). You must keep records during periods of startup. You must provide reports concerning activities and periods of startup, as specified in § 63.7555.
6. An existing or new boiler or process heater subject to emission limits in Tables 1 or 2 or 11 through 13 to this subpart during shutdown	You must operate all CMS during shutdown. While firing coal/solid fossil fuel, biomass/bio-based solids, heavy liquid fuel, or gas 2 (other) gases during shutdown, you must vent emissions to the main stack(s) and operate all applicable control devices, except limestone injection in FBC boilers, dry scrubber, fabric filter, SNCR, and SCR.
	You must comply with all applicable emissions limits at all times except for startup or shutdown periods conforming with this work practice. You must collect monitoring data during periods of shutdown, as specified in § 63.7535(b). You must keep records during periods of shutdown. You must provide reports concerning activities and periods of shutdown, as specified in § 63.7555.

[78 FR 7198, Jan. 31, 2013]

Table 4 to Subpart DDDDD of Part 63—Operating Limits for Boilers and Process Heaters

As stated in § 63.7500, you must comply with the applicable operating limits:

When complying with a Table 1, 2, 11, 12, or 13 numerical emission limit using . . .	You must meet these operating limits . . .
1. Wet PM scrubber control on a boiler not using a PM CPMS	Maintain the 30-day rolling average pressure drop and the 30-day rolling average liquid flow rate at or above the lowest one-hour average pressure drop and the lowest one-hour average liquid flow rate, respectively, measured during the most recent performance test demonstrating compliance with the PM emission limitation according to § 63.7530(b) and Table 7 to this subpart.

When complying with a Table 1, 2, 11, 12, or 13 numerical emission limit using . . .	You must meet these operating limits . . .
2. Wet acid gas (HCl) scrubber control on a boiler not using a HCl CEMS	Maintain the 30-day rolling average effluent pH at or above the lowest one-hour average pH and the 30-day rolling average liquid flow rate at or above the lowest one-hour average liquid flow rate measured during the most recent performance test demonstrating compliance with the HCl emission limitation according to § 63.7530(b) and Table 7 to this subpart.
3. Fabric filter control on units not using a PM CPMS	a. Maintain opacity to less than or equal to 10 percent opacity (daily block average); or
	b. Install and operate a bag leak detection system according to § 63.7525 and operate the fabric filter such that the bag leak detection system alert is not activated more than 5 percent of the operating time during each 6-month period.
4. Electrostatic precipitator control on units not using a PM CPMS	a. This option is for boilers and process heaters that operate dry control systems (i.e., an ESP without a wet scrubber). Existing and new boilers and process heaters must maintain opacity to less than or equal to 10 percent opacity (daily block average); or
	b. This option is only for boilers and process heaters not subject to PM CPMS or continuous compliance with an opacity limit (i.e., COMS). Maintain the 30-day rolling average total secondary electric power input of the electrostatic precipitator at or above the operating limits established during the performance test according to § 63.7530(b) and Table 7 to this subpart.
5. Dry scrubber or carbon injection control on a boiler not using a mercury CEMS	Maintain the minimum sorbent or carbon injection rate as defined in § 63.7575 of this subpart.
6. Any other add-on air pollution control type on units not using a PM CPMS	This option is for boilers and process heaters that operate dry control systems. Existing and new boilers and process heaters must maintain opacity to less than or equal to 10 percent opacity (daily block average).
7. Fuel analysis	Maintain the fuel type or fuel mixture such that the applicable emission rates calculated according to § 63.7530(c)(1), (2) and/or (3) is less than the applicable emission limits.
8. Performance testing	For boilers and process heaters that demonstrate compliance with a performance test, maintain the operating load of each unit such that it does not exceed 110 percent of the highest hourly average operating load recorded during the most recent performance test.
9. Oxygen analyzer system	For boilers and process heaters subject to a CO emission limit that demonstrate compliance with an O_2analyzer system as specified in § 63.7525(a), maintain the 30-day rolling average oxygen content at or above the lowest hourly average oxygen concentration measured during the most recent CO performance test, as specified in Table 8. This requirement does not apply to units that install an oxygen trim system since these units will set the trim system to the level specified in § 63.7525(a).
10. SO_2CEMS	For boilers or process heaters subject to an HCl emission limit that demonstrate compliance with an SO_2CEMS, maintain the 30-day rolling average SO_2emission rate at or below the highest hourly average SO_2concentration measured during the most recent HCl performance test, as specified in Table 8.

[78 FR 7199, Jan. 31, 2013]

Table 5 to Subpart DDDDD of Part 63—Performance Testing Requirements

As stated in § 63.7520, you must comply with the following requirements for performance testing for existing, new or reconstructed affected sources:

To conduct a performance test for the following pollutant...	You must...	Using...
1. Filterable PM	a. Select sampling ports location and the number of traverse points	Method 1 at 40 CFR part 60, appendix A-1 of this chapter.
	b. Determine velocity and volumetric flow-rate of the stack gas	Method 2, 2F, or 2G at 40 CFR part 60, appendix A-1 or A-2 to part 60 of this chapter.
	c. Determine oxygen or carbon dioxide concentration of the stack gas	Method 3A or 3B at 40 CFR part 60, appendix A-2 to part 60 of this chapter, or ANSI/ASME PTC 19.10-1981.[a]
	d. Measure the moisture content of the stack gas	Method 4 at 40 CFR part 60, appendix A-3 of this chapter.
	e. Measure the PM emission concentration	Method 5 or 17 (positive pressure fabric filters must use Method 5D) at 40 CFR part 60, appendix A-3 or A-6 of this chapter.
	f. Convert emissions concentration to lb per MMBtu emission rates	Method 19 F-factor methodology at 40 CFR part 60, appendix A-7 of this chapter.
2. TSM	a. Select sampling ports location and the number of traverse points	Method 1 at 40 CFR part 60, appendix A-1 of this chapter.
	b. Determine velocity and volumetric flow-rate of the stack gas	Method 2, 2F, or 2G at 40 CFR part 60, appendix A-1 or A-2 of this chapter.
	c. Determine oxygen or carbon dioxide concentration of the stack gas	Method 3A or 3B at 40 CFR part 60, appendix A-1 of this chapter, or ANSI/ASME PTC 19.10-1981.[a]
	d. Measure the moisture content of the stack gas	Method 4 at 40 CFR part 60, appendix A-3 of this chapter.
	e. Measure the TSM emission concentration	Method 29 at 40 CFR part 60, appendix A-8 of this chapter
	f. Convert emissions concentration to lb per MMBtu emission rates	Method 19 F-factor methodology at 40 CFR part 60, appendix A-7 of this chapter.
3. Hydrogen chloride	a. Select sampling ports location and the number of traverse points	Method 1 at 40 CFR part 60, appendix A-1 of this chapter.
	b. Determine velocity and volumetric flow-rate of the stack gas	Method 2, 2F, or 2G at 40 CFR part 60, appendix A-2 of this chapter.
	c. Determine oxygen or carbon dioxide concentration of the stack gas	Method 3A or 3B at 40 CFR part 60, appendix A-2 of this chapter, or ANSI/ASME PTC 19.10-1981.[a]
	d. Measure the moisture content of the stack gas	Method 4 at 40 CFR part 60, appendix A-3 of this chapter.
	e. Measure the hydrogen chloride emission concentration	Method 26 or 26A (M26 or M26A) at 40 CFR part 60, appendix A-8 of this chapter.

To conduct a performance test for the following pollutant...	You must...	Using...
	f. Convert emissions concentration to lb per MMBtu emission rates	Method 19 F-factor methodology at 40 CFR part 60, appendix A-7 of this chapter.
4. Mercury	a. Select sampling ports location and the number of traverse points	Method 1 at 40 CFR part 60, appendix A-1 of this chapter.
	b. Determine velocity and volumetric flow-rate of the stack gas	Method 2, 2F, or 2G at 40 CFR part 60, appendix A-1 or A-2 of this chapter.
	c. Determine oxygen or carbon dioxide concentration of the stack gas	Method 3A or 3B at 40 CFR part 60, appendix A-1 of this chapter, or ANSI/ASME PTC 19.10-1981.[a]
	d. Measure the moisture content of the stack gas	Method 4 at 40 CFR part 60, appendix A-3 of this chapter.
	e. Measure the mercury emission concentration	Method 29, 30A, or 30B (M29, M30A, or M30B) at 40 CFR part 60, appendix A-8 of this chapter or Method 101A at 40 CFR part 61, appendix B of this chapter, or ASTM Method D6784.[a]
	f. Convert emissions concentration to lb per MMBtu emission rates	Method 19 F-factor methodology at 40 CFR part 60, appendix A-7 of this chapter.
5. CO	a. Select the sampling ports location and the number of traverse points	Method 1 at 40 CFR part 60, appendix A-1 of this chapter.
	b. Determine oxygen concentration of the stack gas	Method 3A or 3B at 40 CFR part 60, appendix A-3 of this chapter, or ASTM D6522-00 (Reapproved 2005), or ANSI/ASME PTC 19.10-1981.[a]
	c. Measure the moisture content of the stack gas	Method 4 at 40 CFR part 60, appendix A-3 of this chapter.
	d. Measure the CO emission concentration	Method 10 at 40 CFR part 60, appendix A-4 of this chapter. Use a measurement span value of 2 times the concentration of the applicable emission limit.

[76 FR 15664, Mar. 21, 2011, as amended at 78 FR 7200, Jan. 31, 2013]

Table 6 to Subpart DDDDD of Part 63—Fuel Analysis Requirements

As stated in § 63.7521, you must comply with the following requirements for fuel analysis testing for existing, new or reconstructed affected sources. However, equivalent methods (as defined in § 63.7575) may be used in lieu of the prescribed methods at the discretion of the source owner or operator:

To conduct a fuel analysis for the following pollutant . . .	You must . . .	Using . . .
1. Mercury	a. Collect fuel samples	Procedure in § 63.7521(c) or ASTM D5192 [a], or ASTM D7430 [a], or ASTM D6883 [a], or ASTM D2234/D2234M [a](for coal) or EPA 1631 or EPA 1631E or ASTM D6323 [a](for solid), or EPA 821-R-01-013 (for liquid or solid), or ASTM D4177 [a](for liquid), or ASTM D4057 [a](for liquid), or equivalent.
	b. Composite fuel samples	Procedure in § 63.7521(d) or equivalent.

To conduct a fuel analysis for the following pollutant . . .	You must . . .	Using . . .
	c. Prepare composited fuel samples	EPA SW-846-3050B [a](for solid samples), EPA SW-846-3020A [a](for liquid samples), ASTM D2013/D2013M [a](for coal), ASTM D5198 [a](for biomass), or EPA 3050 [a](for solid fuel), or EPA 821-R-01-013 [a](for liquid or solid), or equivalent.
	d. Determine heat content of the fuel type	ASTM D5865 [a](for coal) or ASTM E711 [a](for biomass), or ASTM D5864 [a]for liquids and other solids, or ASTM D240 [a]or equivalent.
	e. Determine moisture content of the fuel type	ASTM D3173 [a], ASTM E871 [a], or ASTM D5864 [a], or ASTM D240, or ASTM D95 [a](for liquid fuels), or ASTM D4006 [a](for liquid fuels), or ASTM D4177 [a](for liquid fuels) or ASTM D4057 [a](for liquid fuels), or equivalent.
	f. Measure mercury concentration in fuel sample	ASTM D6722 [a](for coal), EPA SW-846-7471B [a](for solid samples), or EPA SW-846-7470A [a](for liquid samples), or equivalent.
	g. Convert concentration into units of pounds of mercury per MMBtu of heat content	Equation 8 in § 63.7530.
	h. Calculate the mercury emission rate from the boiler or process heater in units of pounds per million Btu	Equations 10 and 12 in § 63.7530.
2. HCl	a. Collect fuel samples	Procedure in § 63.7521(c) or ASTM D5192 [a], or ASTM D7430 [a], or ASTM D6883 [a], or ASTM D2234/D2234M [a](for coal) or ASTM D6323 [a](for coal or biomass), ASTM D4177 [a](for liquid fuels) or ASTM D4057 [a](for liquid fuels), or equivalent.
	b. Composite fuel samples	Procedure in § 63.7521(d) or equivalent.
	c. Prepare composited fuel samples	EPA SW-846-3050B [a](for solid samples), EPA SW-846-3020A [a](for liquid samples), ASTM D2013/D2013M§[a](for coal), or ASTM D5198§[a](for biomass), or EPA 3050 [a]or equivalent.
	d. Determine heat content of the fuel type	ASTM D5865 [a](for coal) or ASTM E711 [a](for biomass), ASTM D5864, ASTM D240 [a]or equivalent.
	e. Determine moisture content of the fuel type	ASTM D3173 [a]or ASTM E871 [a], or D5864 [a], or ASTM D240 [a], or ASTM D95[a](for liquid fuels), or ASTM D4006 [a](for liquid fuels), or ASTM D4177 [a](for liquid fuels) or ASTM D4057 [a](for liquid fuels) or equivalent.
	f. Measure chlorine concentration in fuel sample	EPA SW-846-9250 [a], ASTM D6721 [a], ASTM D4208 [a](for coal), or EPA SW-846-5050 [a]or ASTM E776 [a](for solid fuel), or EPA SW-846-9056 [a]or SW-846-9076 [a](for solids or liquids) or equivalent.
	g. Convert concentrations into units of pounds of HCl per MMBtu of heat content	Equation 7 in § 63.7530.
	h. Calculate the HCl emission rate from the boiler or process heater in units of pounds per million Btu	Equations 10 and 11 in § 63.7530.
3. Mercury Fuel Specification for other gas 1 fuels	a. Measure mercury concentration in the fuel sample and convert to units of micrograms per cubic meter	Method 30B (M30B) at 40 CFR part 60, appendix A-8 of this chapter or ASTM D5954 [a], ASTM D6350 [a], ISO 6978-1:2003(E) [a], or ISO 6978-2:2003(E) [a], or EPA-1631 [a]or equivalent.

To conduct a fuel analysis for the following pollutant . . .	You must . . .	Using . . .
	b. Measure mercury concentration in the exhaust gas when firing only the other gas 1 fuel is fired in the boiler or process heater	Method 29, 30A, or 30B (M29, M30A, or M30B) at 40 CFR part 60, appendix A-8 of this chapter or Method 101A or Method 102 at 40 CFR part 61, appendix B of this chapter, or ASTM Method D6784 [a]or equivalent.
4. TSM for solid fuels	a. Collect fuel samples	Procedure in § 63.7521(c) or ASTM D5192 [a], or ASTM D7430 [a], or ASTM D6883 [a], or ASTM D2234/D2234M [a](for coal) or ASTM D6323 [a](for coal or biomass), or ASTM D4177 [a],(for liquid fuels)or ASTM D4057 [a](for liquid fuels),or equivalent.
	b. Composite fuel samples	Procedure in § 63.7521(d) or equivalent.
	c. Prepare composited fuel samples	EPA SW-846-3050B [a](for solid samples), EPA SW-846-3020A [a](for liquid samples), ASTM D2013/D2013M [a](for coal), ASTM D5198 [a]or TAPPI T266 [a](for biomass), or EPA 3050 [a]or equivalent.
	d. Determine heat content of the fuel type	ASTM D5865 [a](for coal) or ASTM E711 [a](for biomass), or ASTM D5864 [a]for liquids and other solids, or ASTM D240 [a]or equivalent.
	e. Determine moisture content of the fuel type	ASTM D3173 [a]or ASTM E871 [a], or D5864, or ASTM D240 [a], or ASTM D95 [a](for liquid fuels), or ASTM D4006[a](for liquid fuels), or ASTM D4177 [a](for liquid fuels) or ASTM D4057 [a](for liquid fuels), or equivalent.
	f. Measure TSM concentration in fuel sample	ASTM D3683 [a], or ASTM D4606 [a], or ASTM D6357 [a]or EPA 200.8 [a]or EPA SW-846-6020 [a], or EPA SW-846-6020A [a], or EPA SW-846-6010C [a], EPA 7060 [a]or EPA 7060A [a](for arsenic only), or EPA SW-846-7740 [a](for selenium only).
	g. Convert concentrations into units of pounds of TSM per MMBtu of heat content	Equation 9 in § 63.7530.
	h. Calculate the TSM emission rate from the boiler or process heater in units of pounds per million Btu	Equations 10 and 13 in § 63.7530.

[a] Incorporated by reference, see § 63.14.

[78 FR 7201, Jan. 31, 2013]

Table 7 to Subpart DDDDD of Part 63—Establishing Operating Limits

As stated in § 63.7520, you must comply with the following requirements for establishing operating limits:

If you have an applicable emission limit for . . .	And your operating limits are based on . . .	You must . . .	Using . . .	According to the following requirements
1. PM, TSM, or mercury	a. Wet scrubber operating parameters	i. Establish a site-specific minimum scrubber pressure drop and minimum flow rate operating limit according to § 63.7530(b)	(1) Data from the scrubber pressure drop and liquid flow rate monitors and the PM or mercury performance test	(a) You must collect scrubber pressure drop and liquid flow rate data every 15 minutes during the entire period of the performance tests.
				(b) Determine the lowest hourly average scrubber pressure drop and liquid flow rate by computing the hourly averages using all of the 15-minute readings taken during each performance test.
	b. Electrostatic precipitator operating parameters (option only for units that operate wet scrubbers)	i. Establish a site-specific minimum total secondary electric power input according to § 63.7530(b)	(1) Data from the voltage and secondary amperage monitors during the PM or mercury performance test	(a) You must collect secondary voltage and secondary amperage for each ESP cell and calculate total secondary electric power input data every 15 minutes during the entire period of the performance tests.
				(b) Determine the average total secondary electric power input by computing the hourly averages using all of the 15-minute readings taken during each performance test.
2. HCl	a. Wet scrubber operating parameters	i. Establish site-specific minimum pressure drop, effluent pH, and flow rate operating limits according to § 63.7530(b)	(1) Data from the pressure drop, pH, and liquid flow-rate monitors and the HCl performance test	(a) You must collect pH and liquid flow-rate data every 15 minutes during the entire period of the performance tests.
				(b) Determine the hourly average pH and liquid flow rate by computing the hourly averages using all of the 15-minute readings taken during each performance test.

If you have an applicable emission limit for . . .	And your operating limits are based on . . .	You must . . .	Using . . .	According to the following requirements
	b. Dry scrubber operating parameters	i. Establish a site-specific minimum sorbent injection rate operating limit according to § 63.7530(b). If different acid gas sorbents are used during the HCl performance test, the average value for each sorbent becomes the site-specific operating limit for that sorbent	(1) Data from the sorbent injection rate monitors and HCl or mercury performance test	(a) You must collect sorbent injection rate data every 15 minutes during the entire period of the performance tests.
				(b) Determine the hourly average sorbent injection rate by computing the hourly averages using all of the 15-minute readings taken during each performance test.
				(c) Determine the lowest hourly average of the three test run averages established during the performance test as your operating limit. When your unit operates at lower loads, multiply your sorbent injection rate by the load fraction (e.g., for 50 percent load, multiply the injection rate operating limit by 0.5) to determine the required injection rate.
	c. Alternative Maximum SO_2emission rate	i. Establish a site-specific maximum SO_2emission rate operating limit according to § 63.7530(b)	(1) Data from SO_2CEMS and the HCl performance test	(a) You must collect the SO_2emissions data according to § 63.7525(m) during the most recent HCl performance tests.
				(b) The maximum SO_2emission rate is equal to the lowest hourly average SO_2emission rate measured during the most recent HCl performance tests.
3. Mercury	a. Activated carbon injection	i. Establish a site-specific minimum activated carbon injection rate operating limit according to § 63.7530(b)	(1) Data from the activated carbon rate monitors and mercury performance test	(a) You must collect activated carbon injection rate data every 15 minutes during the entire period of the performance tests.
				(b) Determine the hourly average activated carbon injection rate by computing the hourly averages using all of the 15-minute readings taken during each performance test.

If you have an applicable emission limit for . . .	And your operating limits are based on . . .	You must . . .	Using . . .	According to the following requirements
				(c) Determine the lowest hourly average established during the performance test as your operating limit. When your unit operates at lower loads, multiply your activated carbon injection rate by the load fraction (e.g., actual heat input divided by heat input during performance test, for 50 percent load, multiply the injection rate operating limit by 0.5) to determine the required injection rate.
4. Carbon monoxide	a. Oxygen	i. Establish a unit-specific limit for minimum oxygen level according to § 63.7520	(1) Data from the oxygen analyzer system specified in § 63.7525(a)	(a) You must collect oxygen data every 15 minutes during the entire period of the performance tests.
				(b) Determine the hourly average oxygen concentration by computing the hourly averages using all of the 15-minute readings taken during each performance test.
				(c) Determine the lowest hourly average established during the performance test as your minimum operating limit.
5. Any pollutant for which compliance is demonstrated by a performance test	a. Boiler or process heater operating load	i. Establish a unit specific limit for maximum operating load according to § 63.7520(c)	(1) Data from the operating load monitors or from steam generation monitors	(a) You must collect operating load or steam generation data every 15 minutes during the entire period of the performance test.
				(b) Determine the average operating load by computing the hourly averages using all of the 15-minute readings taken during each performance test.
				(c) Determine the average of the three test run averages during the performance test, and multiply this by 1.1 (110 percent) as your operating limit.

[76 FR 15664, Mar. 21, 2011, as amended at 78 FR 7203, Jan. 31, 2013]

Table 8 to Subpart DDDDD of Part 63—Demonstrating Continuous Compliance

As stated in § 63.7540, you must show continuous compliance with the emission limitations for each boiler or process heater according to the following:

If you must meet the following operating limits or work practice standards . . .	You must demonstrate continuous compliance by . . .
1. Opacity	a. Collecting the opacity monitoring system data according to § 63.7525(c) and § 63.7535; and
	b. Reducing the opacity monitoring data to 6-minute averages; and
	c. Maintaining opacity to less than or equal to 10 percent (daily block average).
2. PM CPMS	a. Collecting the PM CPMS output data according to § 63.7525;
	b. Reducing the data to 30-day rolling averages; and
	c. Maintaining the 30-day rolling average PM CPMS output data to less than the operating limit established during the performance test according to § 63.7530(b)(4).
3. Fabric Filter Bag Leak Detection Operation	Installing and operating a bag leak detection system according to § 63.7525 and operating the fabric filter such that the requirements in § 63.7540(a)(9) are met.
4. Wet Scrubber Pressure Drop and Liquid Flow-rate	a. Collecting the pressure drop and liquid flow rate monitoring system data according to §§ 63.7525 and 63.7535; and
	b. Reducing the data to 30-day rolling averages; and
	c. Maintaining the 30-day rolling average pressure drop and liquid flow-rate at or above the operating limits established during the performance test according to § 63.7530(b).
5. Wet Scrubber pH	a. Collecting the pH monitoring system data according to §§ 63.7525 and 63.7535; and
	b. Reducing the data to 30-day rolling averages; and
	c. Maintaining the 30-day rolling average pH at or above the operating limit established during the performance test according to § 63.7530(b).
6. Dry Scrubber Sorbent or Carbon Injection Rate	a. Collecting the sorbent or carbon injection rate monitoring system data for the dry scrubber according to §§ 63.7525 and 63.7535; and
	b. Reducing the data to 30-day rolling averages; and
	c. Maintaining the 30-day rolling average sorbent or carbon injection rate at or above the minimum sorbent or carbon injection rate as defined in § 63.7575.
7. Electrostatic Precipitator Total Secondary Electric Power Input	a. Collecting the total secondary electric power input monitoring system data for the electrostatic precipitator according to §§ 63.7525 and 63.7535; and
	b. Reducing the data to 30-day rolling averages; and
	c. Maintaining the 30-day rolling average total secondary electric power input at or above the operating limits established during the performance test according to § 63.7530(b).
8. Emission limits using fuel analysis	a. Conduct monthly fuel analysis for HCl or mercury or TSM according to Table 6 to this subpart; and
	b. Reduce the data to 12-month rolling averages; and
	c. Maintain the 12-month rolling average at or below the applicable emission limit for HCl or mercury or TSM in Tables 1 and 2 or 11 through 13 to this subpart.
9. Oxygen content	a. Continuously monitor the oxygen content using an oxygen analyzer system according to § 63.7525(a). This requirement does not apply to units that install an oxygen trim system since these units will set the trim system to the level specified in § 63.7525(a)(2).
	b. Reducing the data to 30-day rolling averages; and

If you must meet the following operating limits or work practice standards . . .	You must demonstrate continuous compliance by . . .
	c. Maintain the 30-day rolling average oxygen content at or above the lowest hourly average oxygen level measured during the most recent CO performance test.
10. Boiler or process heater operating load	a. Collecting operating load data or steam generation data every 15 minutes.
	b. Maintaining the operating load such that it does not exceed 110 percent of the highest hourly average operating load recorded during the most recent performance test according to § 63.7520(c).
11. SO_2emissions using SO_2CEMS	a. Collecting the SO_2CEMS output data according to § 63.7525;
	b. Reducing the data to 30-day rolling averages; and
	c. Maintaining the 30-day rolling average SO_2CEMS emission rate to a level at or below the minimum hourly SO_2rate measured during the most recent HCl performance test according to § 63.7530.

[78 FR 7204, Jan. 31, 2013]

Table 9 to Subpart DDDDD of Part 63—Reporting Requirements

As stated in § 63.7550, you must comply with the following requirements for reports:

You must submit a(n)	The report must contain . . .	You must submit the report . . .
1. Compliance report	a. Information required in § 63.7550(c)(1) through (5); and	Semiannually, annually, biennially, or every 5 years according to the requirements in § 63.7550(b).
	b. If there are no deviations from any emission limitation (emission limit and operating limit) that applies to you and there are no deviations from the requirements for work practice standards in Table 3 to this subpart that apply to you, a statement that there were no deviations from the emission limitations and work practice standards during the reporting period. If there were no periods during which the CMSs, including continuous emissions monitoring system, continuous opacity monitoring system, and operating parameter monitoring systems, were out-of-control as specified in § 63.8(c)(7), a statement that there were no periods during which the CMSs were out-of-control during the reporting period; and	
	c. If you have a deviation from any emission limitation (emission limit and operating limit) where you are not using a CMS to comply with that emission limit or operating limit, or a deviation from a work practice standard during the reporting period, the report must contain the information in § 63.7550(d); and	
	d. If there were periods during which the CMSs, including continuous emissions monitoring system, continuous opacity monitoring system, and operating parameter monitoring systems, were out-of-control as specified in § 63.8(c)(7), or otherwise not operating, the report must contain the information in § 63.7550(e)	

[76 FR 15664, Mar. 21, 2011, as amended at 78 FR 7205, Jan. 31, 2013]

Table 10 to Subpart DDDDD of Part 63—Applicability of General Provisions to Subpart DDDDD

As stated in § 63.7565, you must comply with the applicable General Provisions according to the following:

Citation	Subject	Applies to subpart DDDDD
§ 63.1	Applicability	Yes.
§ 63.2	Definitions	Yes. Additional terms defined in § 63.7575
§ 63.3	Units and Abbreviations	Yes.
§ 63.4	Prohibited Activities and Circumvention	Yes.
§ 63.5	Preconstruction Review and Notification Requirements	Yes.
§ 63.6(a), (b)(1)-(b)(5), (b)(7), (c)	Compliance with Standards and Maintenance Requirements	Yes.
§ 63.6(e)(1)(i)	General duty to minimize emissions.	No. See § 63.7500(a)(3) for the general duty requirement.
§ 63.6(e)(1)(ii)	Requirement to correct malfunctions as soon as practicable.	No.
§ 63.6(e)(3)	Startup, shutdown, and malfunction plan requirements.	No.
§ 63.6(f)(1)	Startup, shutdown, and malfunction exemptions for compliance with non-opacity emission standards.	No.
§ 63.6(f)(2) and (3)	Compliance with non-opacity emission standards.	Yes.
§ 63.6(g)	Use of alternative standards	Yes.
§ 63.6(h)(1)	Startup, shutdown, and malfunction exemptions to opacity standards.	No. See § 63.7500(a).
§ 63.6(h)(2) to (h)(9)	Determining compliance with opacity emission standards	Yes.
§ 63.6(i)	Extension of compliance	Yes. Note: Facilities may also request extensions of compliance for the installation of combined heat and power, waste heat recovery, or gas pipeline or fuel feeding infrastructure as a means of complying with this subpart.
§ 63.6(j)	Presidential exemption.	Yes.
§ 63.7(a), (b), (c), and (d)	Performance Testing Requirements	Yes.
§ 63.7(e)(1)	Conditions for conducting performance tests	No. Subpart DDDDD specifies conditions for conducting performance tests at § 63.7520(a) to (c).
§ 63.7(e)(2)-(e)(9), (f), (g), and (h)	Performance Testing Requirements	Yes.
§ 63.8(a) and (b)	Applicability and Conduct of Monitoring	Yes.

Citation	Subject	Applies to subpart DDDDD
§ 63.8(c)(1)	Operation and maintenance of CMS	Yes.
§ 63.8(c)(1)(i)	General duty to minimize emissions and CMS operation	No. See § 63.7500(a)(3).
§ 63.8(c)(1)(ii)	Operation and maintenance of CMS	Yes.
§ 63.8(c)(1)(iii)	Startup, shutdown, and malfunction plans for CMS	No.
§ 63.8(c)(2) to (c)(9)	Operation and maintenance of CMS	Yes.
§ 63.8(d)(1) and (2)	Monitoring Requirements, Quality Control Program	Yes.
§ 63.8(d)(3)	Written procedures for CMS	Yes, except for the last sentence, which refers to a startup, shutdown, and malfunction plan. Startup, shutdown, and malfunction plans are not required.
§ 63.8(e)	Performance evaluation of a CMS	Yes.
§ 63.8(f)	Use of an alternative monitoring method.	Yes.
§ 63.8(g)	Reduction of monitoring data	Yes.
§ 63.9	Notification Requirements	Yes.
§ 63.10(a), (b)(1)	Recordkeeping and Reporting Requirements	Yes.
§ 63.10(b)(2)(i)	Recordkeeping of occurrence and duration of startups or shutdowns	Yes.
§ 63.10(b)(2)(ii)	Recordkeeping of malfunctions	No. See § 63.7555(d)(7) for recordkeeping of occurrence and duration and § 63.7555(d)(8) for actions taken during malfunctions.
§ 63.10(b)(2)(iii)	Maintenance records	Yes.
§ 63.10(b)(2)(iv) and (v)	Actions taken to minimize emissions during startup, shutdown, or malfunction	No.
§ 63.10(b)(2)(vi)	Recordkeeping for CMS malfunctions	Yes.
§ 63.10(b)(2)(vii) to (xiv)	Other CMS requirements	Yes.
§ 63.10(b)(3)	Recordkeeping requirements for applicability determinations	No.
§ 63.10(c)(1) to (9)	Recordkeeping for sources with CMS	Yes.
§ 63.10(c)(10) and (11)	Recording nature and cause of malfunctions, and corrective actions	No. See § 63.7555(d)(7) for recordkeeping of occurrence and duration and § 63.7555(d)(8) for actions taken during malfunctions.
§ 63.10(c)(12) and (13)	Recordkeeping for sources with CMS	Yes.
§ 63.10(c)(15)	Use of startup, shutdown, and malfunction plan	No.

Citation	Subject	Applies to subpart DDDDD
§ 63.10(d)(1) and (2)	General reporting requirements	Yes.
§ 63.10(d)(3)	Reporting opacity or visible emission observation results	No.
§ 63.10(d)(4)	Progress reports under an extension of compliance	Yes.
§ 63.10(d)(5)	Startup, shutdown, and malfunction reports	No. See § 63.7550(c)(11) for malfunction reporting requirements.
§ 63.10(e)	Additional reporting requirements for sources with CMS	Yes.
§ 63.10(f)	Waiver of recordkeeping or reporting requirements	Yes.
§ 63.11	Control Device Requirements	No.
§ 63.12	State Authority and Delegation	Yes.
§ 63.13-63.16	Addresses, Incorporation by Reference, Availability of Information, Performance Track Provisions	Yes.
§ 63.1(a)(5),(a)(7)-(a)(9), (b)(2), (c)(3)-(4), (d), 63.6(b)(6), (c)(3), (c)(4), (d), (e)(2), (e)(3)(ii), (h)(3), (h)(5)(iv), 63.8(a)(3), 63.9(b)(3), (h)(4), 63.10(c)(2)-(4), (c)(9).	Reserved	No.

[76 FR 15664, Mar. 21, 2011, as amended at 78 FR 7205, Jan. 31, 2013]

Table 11 to Subpart DDDDD of Part 63—Toxic Equivalency Factors for Dioxins/Furans

Table 11 to Subpart DDDDD of Part 63—Toxic Equivalency Factors for Dioxins/Furans

Dioxin/furan congener	Toxic equivalency factor
2,3,7,8-tetrachlorinated dibenzo-p-dioxin	1
1,2,3,7,8-pentachlorinated dibenzo-p-dioxin	1
1,2,3,4,7,8-hexachlorinated dibenzo-p-dioxin	0.1
1,2,3,7,8,9-hexachlorinated dibenzo-p-dioxin	0.1
1,2,3,6,7,8-hexachlorinated dibenzo-p-dioxin	0.1
1,2,3,4,6,7,8-heptachlorinated dibenzo-p-dioxin	0.01
octachlorinated dibenzo-p-dioxin	0.0003
2,3,7,8-tetrachlorinated dibenzofuran	0.1
2,3,4,7,8-pentachlorinated dibenzofuran	0.3
1,2,3,7,8-pentachlorinated dibenzofuran	0.03
1,2,3,4,7,8-hexachlorinated dibenzofuran	0.1
1,2,3,6,7,8-hexachlorinated dibenzofuran	0.1
1,2,3,7,8,9-hexachlorinated dibenzofuran	0.1
2,3,4,6,7,8-hexachlorinated dibenzofuran	0.1

Dioxin/furan congener	Toxic equivalency factor
1,2,3,4,6,7,8-heptachlorinated dibenzofuran	0.01
1,2,3,4,7,8,9-heptachlorinated dibenzofuran	0.01
octachlorinated dibenzofuran	0.0003

[76 FR 15664, Mar. 21, 2011]

EDITORIAL NOTE: At 78 FR 7206, Jan. 31, 2013, Table 11 was added, effective Apr. 1, 2013. However Table 11 could not be added as a Table 11 is already in existence.

Table 12 to Subpart DDDDD of Part 63—Alternative Emission Limits for New or Reconstructed Boilers and Process Heaters That Commenced Construction or Reconstruction After June 4, 2010, and Before May 20, 2011

If your boiler or process heater is in this subcategory	For the following pollutants	The emissions must not exceed the following emission limits, except during periods of startup and shutdown	Using this specified sampling volume or test run duration
1. Units in all subcategories designed to burn solid fuel	a. Mercury	3.5E-06 lb per MMBtu of heat input	For M29, collect a minimum of 2 dscm per run; for M30A or M30B, collect a minimum sample as specified in the method; for ASTM D6784 [a]collect a minimum of 2 dscm.
2. Units in all subcategories designed to burn solid fuel that combust at least 10 percent biomass/bio-based solids on an annual heat input basis and less than 10 percent coal/solid fossil fuels on an annual heat input basis	a. Particulate Matter	0.008 lb per MMBtu of heat input (30-day rolling average for units 250 MMBtu/hr or greater, 3-run average for units less than 250 MMBtu/hr)	Collect a minimum of 1 dscm per run.
	b. Hydrogen Chloride	0.004 lb per MMBtu of heat input	For M26A, collect a minimum of 1 dscm per run; for M26, collect a minimum of 60 liters per run.
3. Units in all subcategories designed to burn solid fuel that combust at least 10 percent coal/solid fossil fuels on an annual heat input basis and less than 10 percent biomass/bio-based solids on an annual heat input basis	a. Particulate Matter	0.0011 lb per MMBtu of heat input (30-day rolling average for units 250 MMBtu/hr or greater, 3-run average for units less than 250 MMBtu/hr)	Collect a minimum of 3 dscm per run.
	b. Hydrogen Chloride	0.0022 lb per MMBtu of heat input	For M26A, collect a minimum of 1 dscm per run; for M26, collect a minimum of 60 liters per run.
4. Units designed to burn pulverized coal/solid fossil fuel	a. CO	90 ppm by volume on a dry basis corrected to 3 percent oxygen	1 hr minimum sampling time.
	b. Dioxins/Furans	0.003 ng/dscm (TEQ) corrected to 7 percent oxygen	Collect a minimum of 4 dscm per run.
5. Stokers designed to burn coal/solid fossil fuel	a. CO	7 ppm by volume on a dry basis corrected to 3 percent oxygen	1 hr minimum sampling time.

If your boiler or process heater is in this subcategory	For the following pollutants	The emissions must not exceed the following emission limits, except during periods of startup and shutdown	Using this specified sampling volume or test run duration
	b. Dioxins/Furans	0.003 ng/dscm (TEQ) corrected to 7 percent oxygen	Collect a minimum of 4 dscm per run.
6. Fluidized bed units designed to burn coal/solid fossil fuel	a. CO	30 ppm by volume on a dry basis corrected to 3 percent oxygen	1 hr minimum sampling time.
	b. Dioxins/Furans	0.002 ng/dscm (TEQ) corrected to 7 percent oxygen	Collect a minimum of 4 dscm per run.
7. Stokers designed to burn biomass/bio-based solids	a. CO	560 ppm by volume on a dry basis corrected to 3 percent oxygen	1 hr minimum sampling time.
	b. Dioxins/Furans	0.005 ng/dscm (TEQ) corrected to 7 percent oxygen	Collect a minimum of 4 dscm per run.
8. Fluidized bed units designed to burn biomass/bio-based solids	a. CO	260 ppm by volume on a dry basis corrected to 3 percent oxygen	1 hr minimum sampling time.
	b. Dioxins/Furans	0.02 ng/dscm (TEQ) corrected to 7 percent oxygen	Collect a minimum of 4 dscm per run.
9. Suspension burners/Dutch Ovens designed to burn biomass/bio-based solids	a. CO	1,010 ppm by volume on a dry basis corrected to 3 percent oxygen	1 hr minimum sampling time.
	b. Dioxins/Furans	0.2 ng/dscm (TEQ) corrected to 7 percent oxygen	Collect a minimum of 4 dscm per run.
10. Fuel cells designed to burn biomass/bio-based solids	a. CO	470 ppm by volume on a dry basis corrected to 3 percent oxygen	1 hr minimum sampling time.
	b. Dioxins/Furans	0.003 ng/dscm (TEQ) corrected to 7 percent oxygen	Collect a minimum of 4 dscm per run.
11. Hybrid suspension/grate units designed to burn biomass/bio-based solids	a. CO	1,500 ppm by volume on a dry basis corrected to 3 percent oxygen	1 hr minimum sampling time.
	b. Dioxins/Furans	0.2 ng/dscm (TEQ) corrected to 7 percent oxygen	Collect a minimum of 4 dscm per run.
12. Units designed to burn liquid fuel	a. Particulate Matter	0.002 lb per MMBtu of heat input (30-day rolling average for units 250 MMBtu/hr or greater, 3-run average for units less than 250 MMBtu/hr)	Collect a minimum of 2 dscm per run.
	b. Hydrogen Chloride	0.0032 lb per MMBtu of heat input	For M26A, collect a minimum of 1 dscm per run; for M26, collect a minimum of 60 liters per run.

If your boiler or process heater is in this subcategory	For the following pollutants	The emissions must not exceed the following emission limits, except during periods of startup and shutdown	Using this specified sampling volume or test run duration
	c. Mercury	3.0E-07 lb per MMBtu of heat input	For M29, collect a minimum of 2 dscm per run; for M30A or M30B, collect a minimum sample as specified in the method; for ASTM D6784 [a]collect a minimum of 2 dscm.
	d. CO	3 ppm by volume on a dry basis corrected to 3 percent oxygen	1 hr minimum sampling time.
	e. Dioxins/Furans	0.002 ng/dscm (TEQ) corrected to 7 percent oxygen	Collect a minimum of 4 dscm per run.
13. Units designed to burn liquid fuel located in non-continental States and territories	a. Particulate Matter	0.002 lb per MMBtu of heat input (30-day rolling average for units 250 MMBtu/hr or greater, 3-run average for units less than 250 MMBtu/hr)	Collect a minimum of 2 dscm per run.
	b. Hydrogen Chloride	0.0032 lb per MMBtu of heat input	For M26A, collect a minimum of 1 dscm per run; for M26, collect a minimum of 60 liters per run.
	c. Mercury	7.8E-07 lb per MMBtu of heat input	For M29, collect a minimum of 1 dscm per run; for M30A or M30B, collect a minimum sample as specified in the method; for ASTM D6784 [a]collect a minimum of 2 dscm.
	d. CO	51 ppm by volume on a dry basis corrected to 3 percent oxygen	1 hr minimum sampling time.
	e. Dioxins/Furans	0.002 ng/dscm (TEQ) corrected to 7 percent oxygen	Collect a minimum of 4 dscm per run.
14. Units designed to burn gas 2 (other) gases	a. Particulate Matter	0.0067 lb per MMBtu of heat input (30-day rolling average for units 250 MMBtu/hr or greater, 3-run average for units less than 250 MMBtu/hr)	Collect a minimum of 1 dscm per run.
	b. Hydrogen Chloride	0.0017 lb per MMBtu of heat input	For M26A, collect a minimum of 1 dscm per run; for M26, collect a minimum of 60 liters per run.
	c. Mercury	7.9E-06 lb per MMBtu of heat input	For M29, collect a minimum of 1 dscm per run; for M30A or M30B, collect a minimum sample as specified in the method; for ASTM D6784 [a]collect a minimum of 2 dscm.

If your boiler or process heater is in this subcategory	For the following pollutants	The emissions must not exceed the following emission limits, except during periods of startup and shutdown	Using this specified sampling volume or test run duration
	d. CO	3 ppm by volume on a dry basis corrected to 3 percent oxygen	1 hr minimum sampling time.
	e. Dioxins/Furans	0.08 ng/dscm (TEQ) corrected to 7 percent oxygen	Collect a minimum of 4 dscm per run.

[a] Incorporated by reference, see § 63.14.

[76 FR 15664, Mar. 21, 2011]

EDITORIAL NOTE: At 78 FR 7208, Jan. 31, 2013, Table 12 was added, effective Apr. 1, 2013. However, Table 12 could not be added as a Table 12 is already in existence.

Table 13 to Subpart DDDDD of Part 63—Alternative Emission Limits for New or Reconstructed Boilers and Process Heaters That Commenced Construction or Reconstruction After December 23, 2011, and Before January 31, 2013

If your boiler or process heater is in this subcategory . . .	For the following pollutants . . .	The emissions must not exceed the following emission limits, except during periods of startup and shutdown . . .	Using this specified sampling volume or test run duration . . .
1. Units in all subcategories designed to burn solid fuel	a. HCl	0.022 lb per MMBtu of heat input	For M26A, collect a minimum of 1 dscm per run; for M26 collect a minimum of 120 liters per run.
	b. Mercury	8.6E-07 [a]lb per MMBtu of heat input	For M29, collect a minimum of 4 dscm per run; for M30A or M30B, collect a minimum sample as specified in the method; for ASTM D6784 [b]collect a minimum of 4 dscm.
2. Pulverized coal boilers designed to burn coal/solid fossil fuel	a. Carbon monoxide (CO) (or CEMS)	130 ppm by volume on a dry basis corrected to 3 percent oxygen, 3-run average; or (320 ppm by volume on a dry basis corrected to 3 percent oxygen, 30-day rolling average)	1 hr minimum sampling time.
	b. Filterable PM (or TSM)	1.1E-03 lb per MMBtu of heat input; or (2.8E-05 lb per MMBtu of heat input)	Collect a minimum of 3 dscm per run.
3. Stokers designed to burn coal/solid fossil fuel	a. CO (or CEMS)	130 ppm by volume on a dry basis corrected to 3 percent oxygen, 3-run average; or (340 ppm by volume on a dry basis corrected to 3 percent oxygen, 10-day rolling average)	1 hr minimum sampling time.
	b. Filterable PM (or TSM)	2.8E-02 lb per MMBtu of heat input; or (2.3E-05 lb per MMBtu of heat input)	Collect a minimum of 2 dscm per run.

If your boiler or process heater is in this subcategory . . .	For the following pollutants . . .	The emissions must not exceed the following emission limits, except during periods of startup and shutdown . . .	Using this specified sampling volume or test run duration . . .
4. Fluidized bed units designed to burn coal/solid fossil fuel	a. CO (or CEMS)	130 ppm by volume on a dry basis corrected to 3 percent oxygen, 3-run average; or (230 ppm by volume on a dry basis corrected to 3 percent oxygen, 30-day rolling average)	1 hr minimum sampling time.
	b. Filterable PM (or TSM)	1.1E-03 lb per MMBtu of heat input; or (2.3E-05 lb per MMBtu of heat input)	Collect a minimum of 3 dscm per run.
5. Fluidized bed units with an integrated heat exchanger designed to burn coal/solid fossil fuel	a. CO (or CEMS)	140 ppm by volume on a dry basis corrected to 3 percent oxygen, 3-run average; or (150 ppm by volume on a dry basis corrected to 3 percent oxygen, 30-day rolling average)	1 hr minimum sampling time.
	b. Filterable PM (or TSM)	1.1E-03 lb per MMBtu of heat input; or (2.3E-05 lb per MMBtu of heat input)	Collect a minimum of 3 dscm per run.
6. Stokers/sloped grate/others designed to burn wet biomass fuel	a. CO (or CEMS)	620 ppm by volume on a dry basis corrected to 3 percent oxygen, 3-run average; or (410 ppm by volume on a dry basis corrected to 3 percent oxygen, 10-day rolling average)	1 hr minimum sampling time.
	b. Filterable PM (or TSM)	3.0E-02 lb per MMBtu of heat input; or (2.6E-05 lb per MMBtu of heat input)	Collect a minimum of 2 dscm per run.
7. Stokers/sloped grate/others designed to burn kiln-dried biomass fuel	a. CO	460 ppm by volume on a dry basis corrected to 3 percent oxygen	1 hr minimum sampling time.
	b. Filterable PM (or TSM)	3.2E-01 lb per MMBtu of heat input; or (4.0E-03 lb per MMBtu of heat input)	Collect a minimum of 2 dscm per run.
8. Fluidized bed units designed to burn biomass/bio-based solids	a. CO (or CEMS)	230 ppm by volume on a dry basis corrected to 3 percent oxygen, 3-run average; or (310 ppm by volume on a dry basis corrected to 3 percent oxygen, 30-day rolling average)	1 hr minimum sampling time.
	b. Filterable PM (or TSM)	9.8E-03 lb per MMBtu of heat input; or (8.3E-05 [a]lb per MMBtu of heat input)	Collect a minimum of 3 dscm per run.
9. Suspension burners designed to burn biomass/bio-based solids	a. CO (or CEMS)	2,400 ppm by volume on a dry basis corrected to 3 percent oxygen, 3-run average; or (2,000 ppm by volume on a dry basis corrected to 3 percent oxygen, 10-day rolling average)	1 hr minimum sampling time.
	b. Filterable PM (or TSM)	5.1E-02 lb per MMBtu of heat input; or (6.5E-03 lb per MMBtu of heat input)	Collect a minimum of 2 dscm per run.
10. Dutch Ovens/Pile burners designed to burn biomass/bio-based solids	a. CO (or CEMS)	810 ppm by volume on a dry basis corrected to 3 percent oxygen, 3-run average; or (520 ppm by volume on a dry basis corrected to 3 percent oxygen, 10-day rolling average)	1 hr minimum sampling time.

If your boiler or process heater is in this subcategory . . .	For the following pollutants . . .	The emissions must not exceed the following emission limits, except during periods of startup and shutdown . . .	Using this specified sampling volume or test run duration . . .
	b. Filterable PM (or TSM)	3.6E-02 lb per MMBtu of heat input; or (3.9E-05 lb per MMBtu of heat input)	Collect a minimum of 2 dscm per run.
11. Fuel cell units designed to burn biomass/bio-based solids	a. CO	910 ppm by volume on a dry basis corrected to 3 percent oxygen	1 hr minimum sampling time.
	b. Filterable PM (or TSM)	2.0E-02 lb per MMBtu of heat input; or (2.9E-05 lb per MMBtu of heat input)	Collect a minimum of 2 dscm per run.
12. Hybrid suspension grate boiler designed to burn biomass/bio-based solids	a. CO (or CEMS)	1,500 ppm by volume on a dry basis corrected to 3 percent oxygen, 3-run average; or (900 ppm by volume on a dry basis corrected to 3 percent oxygen, 30-day rolling average)	1 hr minimum sampling time.
	b. Filterable PM (or TSM)	2.6E-02 lb per MMBtu of heat input; or (4.4E-04 lb per MMBtu of heat input)	Collect a minimum of 3 dscm per run.
13. Units designed to burn liquid fuel	a. HCl	1.2E-03 lb per MMBtu of heat input	For M26A: Collect a minimum of 2 dscm per run; for M26, collect a minimum of 240 liters per run.
	b. Mercury	4.9E-07 [a]lb per MMBtu of heat input	For M29, collect a minimum of 4 dscm per run; for M30A or M30B, collect a minimum sample as specified in the method; for ASTM D6784 [b]collect a minimum of 4 dscm.
14. Units designed to burn heavy liquid fuel	a. CO (or CEMS)	130 ppm by volume on a dry basis corrected to 3 percent oxygen, 3-run average; or (18 ppm by volume on a dry basis corrected to 3 percent oxygen, 10-day rolling average)	1 hr minimum sampling time.
	b. Filterable PM (or TSM)	1.3E-03 lb per MMBtu of heat input; or (7.5E-05 lb per MMBtu of heat input)	Collect a minimum of 3 dscm per run.
15. Units designed to burn light liquid fuel	a. CO (or CEMS)	130 [a]ppm by volume on a dry basis corrected to 3 percent oxygen; or (60 ppm by volume on a dry basis corrected to 3 percent oxygen, 1-day block average).	1 hr minimum sampling time.
	b. Filterable PM (or TSM)	1.1E-03 [a]lb per MMBtu of heat input; or (2.9E-05 lb per MMBtu of heat input)	Collect a minimum of 3 dscm per run.
16. Units designed to burn liquid fuel that are non-continental units	a. CO	130 ppm by volume on a dry basis corrected to 3 percent oxygen, 3-run average based on stack test; or (91 ppm by volume on a dry basis corrected to 3 percent oxygen, 3-hour rolling average)	1 hr minimum sampling time.
	b. Filterable PM (or TSM)	2.3E-02 lb per MMBtu of heat input; or (8.6E-04 lb per MMBtu of heat input)	Collect a minimum of 2 dscm per run.
17. Units designed to burn gas 2 (other) gases	a. CO	130 ppm by volume on a dry basis corrected to 3 percent oxygen	1 hr minimum sampling time.

If your boiler or process heater is in this subcategory . . .	For the following pollutants . . .	The emissions must not exceed the following emission limits, except during periods of startup and shutdown . . .	Using this specified sampling volume or test run duration . . .
	b. HCl	1.7E-03 lb per MMBtu of heat input	For M26A, Collect a minimum of 2 dscm per run; for M26, collect a minimum of 240 liters per run.
	c. Mercury	7.9E-06 lb per MMBtu of heat input	For M29, collect a minimum of 3 dscm per run; for M30A or M30B, collect a minimum sample as specified in the method; for ASTM D6784 [b]collect a minimum of 3 dscm.
	d. Filterable PM (or TSM)	6.7E-03 lb per MMBtu of heat input; or (2.1E-04 lb per MMBtu of heat input)	Collect a minimum of 3 dscm per run.

[a] If you are conducting stack tests to demonstrate compliance and your performance tests for this pollutant for at least 2 consecutive years show that your emissions are at or below this limit and you are not required to conduct testing for CEMS or CPMS monitor certification, you can skip testing according to § 63.7515 if all of the other provision of § 63.7515 are met. For all other pollutants that do not contain a footnote “a”, your performance tests for this pollutant for at least 2 consecutive years must show that your emissions are at or below 75 percent of this limit in order to qualify for skip testing.

[b] Incorporated by reference, see § 63.14.

[78 FR 7210, Jan. 31, 2013]

Indiana Department of Environmental Management
Office of Air Quality

Addendum to the
Technical Support Document (TSD) for a Part 70 Significant Source and Significant Permit Modification

Source Description and Location

Source Name:	U.S. Steel - Gary Works
Source Location:	One North Broadway, Gary, IN 46402
County:	Lake
SIC Code:	3312
Operation Permit No.:	T 089-29907-00121
Operation Permit Issuance Date:	December 20, 2013
Significant Source Modification No.:	089-33648-00121
Significant Permit Modification No.:	089-33651-00121
Permit Reviewer:	Kristen Willoughby

On January 23, 2014, the Office of Air Quality (OAQ) had a notice published in the Post Tribune, Merrillville, Indiana, and the Times, Munster, Indiana, stating that U.S. Steel - Gary Works had applied for Significant Source and Significant Permit Modification relating to a new Capped Argon Bubbling (CAB) Station exhausting to the existing LMF 3 Hot Fume and Material Handling Baghouse NS3137. The notice also stated that OAQ proposed to issue a permit for this modification and provided information on how the public could review the proposed permit and other documentation. Finally, the notice informed interested parties that there was a period of thirty (30) days to provide comments on whether or not this permit should be issued as proposed.

On February 21, 2014, Mr. Natalie Grimmer, on behalf of U.S. Steel - Gary Works, submitted comments on the proposed Significant Source and Significant Permit Modification. The summary of the comments is as follows:

Comment 1:

Page four of the Technical Support Document (TSD) contains an Indiana Administrative Code citation to 326 IAC 2-1.1-1(16) for the definition of potential to emit. No such citation exists in the Code. The correct reference is to paragraph twelve.

The TSD should read:

> Pursuant to ~~326IAC 2-1.1-1(16)~~ **326 IAC2-1.1-1(12)**, Potential to Emit is defined as "the maximum capacity of a stationary source or emission unit to emit any air pollutant under its physical or operational design. Any physical or operational limitation on the capacity of a source to emit an air pollutant, including air pollution control equipment and restrictions on hours of operation or type or amount of material combusted, stored, or processed shall be treated as part of its design if the limitation is enforceable by the U. S. EPA, IDEM or the appropriate air pollution control agency.

Response 1:

IDEM, OAQ acknowledges that the citation on page four of the TSD should read 326 IAC 2-1.1-1(12).

No change will be made to the original TSD. The OAQ prefers that the TSD reflect the permit that was on public notice. Changes to the permit or technical support material that occur after the public notice are documented in this Addendum to the Technical Support Document. This accomplishes the desired result

of ensuring that these types of concerns are documented and part of the record regarding this permit decision.

Comment 2:

The description of the Capped Argon Bubbling (CAB) station in paragraph f of the Emission Unit Description section for Number 2 Q-BOP Shop should be updated to reflect the proposed project. Revise paragraph f of the Emission Unit Description section for the Number 2 Q-BOP Shop so that the description more accurately reflects the CAB station operations.

Paragraph f should read:

(f) One (1) Capped Argon ~~Bubble~~ **Bubbling** (CAB) station **with oxygen blowing**, approved in 2014 for construction, with a maximum capacity of 477,000 tons per year, using the No. 3 LMF Hot Fume and Material Handling Baghouse NS3137 as control, and exhausting to stack NS6148. All uncontrolled exhaust through the roof monitor NS6634.

Response 2:

Condition A.3 and Section D.9 Facility Description Box have been changed as follows:

(f) One (1) Capped Argon Bubbl~~e~~**ing** (CAB) Station **with oxygen blowing**, approved in 2014 for construction, identified as NSC40296, with a maximum capacity of 477,000 tons per year, using the No. 3 LMF Hot Fume and Material Handling Baghouse NS3137 as control, and exhausting to stack NS6148. All uncontrolled emissions exhaust through the roof monitor NS6634.

Comment 3:

Condition D.9.1(c) is incorrectly cited as condition D.9.1(b). Change the numbering so that Condition D.9.1(c) is correctly cited.

Condition D.9.1(b) should read:

~~(b)~~**(c)** The $PM_{2.5}$ emission rate from the Capped Argon Bubbling (CAB) Station, identified as NSC40296, controlled by the No. 3 LMF Hot Fume and Material Handling Baghouse NS3137, shall not exceed 2.0 pounds per hour.

Response 3:

Condition D.9.1 has been revised as follows:

D.9.1 PSD Minor Limit [326 IAC 2-2]

In order to render the requirements of 326 IAC 2-2 (PSD) not applicable, the Permittee shall comply with the following:

(a) ***

(b) ***

(~~b~~**c**) ***

Comment 4:

Condition D.9.10 of the proposed permits is a redundant condition that is already covered under condition D.9.9(a)(7) and D.9.9(b) relating No. 3 LMF Hot Fume and Material Handling Baghouse NS3137 and the observation of broken bags. Condition D.9.10 should be deleted from the permits.

Response 3:

Condition D.9.10 has been removed and Section D.9 and the Table of Contents renumbered.

~~D.9.10 Particulate Control~~

~~In order to ensure compliance with Condition D.9.1, the No. 3 LMF Hot Fume and Material Handling Baghouse NS3137 for PM, PM10, and PM2.5 control shall be in operation and control emissions from the Capped Argon Bubbling (CAB) Station, identified as NSC40296, at all times the Capped Argon Bubbling (CAB) Station is in operation.~~

~~In the event that bag failure is observed in a multi-compartment baghouse, if operations will continue for ten (10) days or more after the failure is observed before the failed units will be repaired or replaced, the Permittee shall promptly notify the IDEM, OAQ of the expected date the failed units will be repaired or replaced. The notification shall also include the status of the applicable compliance monitoring parameters with respect to normal, and the results of any response actions taken up to the time of notification.~~

Comment 4:

Condition D.9.12(a) requires overly burdensome daily visible emission notations of the No. 3 LMF Hot Fume and Material Handling Baghouse Stack. The No. 3 LMF Hot Fume and Material Handling Baghouse is an existing air pollution control device with a history of operating in compliance with permit requirements. Performing weekly notations of visible emissions, along with other monitoring required by Subpart FFFFF, is sufficient to ensure proper operation and compliance with emission limits.

Condition D.9.12(a) should read:

(a) Visible emission notations of the Desulfurization Stations baghouse stack NS6144, Secondary Baghouse stack NS6123, **and** No. 2 Q-BOP Gas Cleaning System Stacks NS6124 and NS6125, ~~and LMF 3 Hot Fume and Material Handling Baghouse stack NS6148~~, shall be performed once per day during normal daylight operations. **Visible emission notations of the No. 3 LMF Hot Fume and Material Handling Baghouse stack NS6148 shall be performed at least once per week during normal daylight operations.** A trained employee shall record whether emissions are normal or abnormal.

Response 4:

The No. 3 LMF Hot Fume and Material Handling Baghouse may be an existing control device; however, it is controlling a new unit. The No. 3 LMF Hot Fume and Material Handling Baghouse has not demonstrated that it will be in compliance with the Capped Argon Bubbling (CAB) Station venting to it.

No change has been made as a result of this comment.

Comment 5:

Condition D.9.15(b) contains overly burdensome record keeping that is consistent with condition D.9.12(a). Condition D.9.15(b) should be altered to reflect the proposed language in comment four of condition D.9.12(a) above

Condition D.9.15(b) should read:

(b) To document the compliance status with Condition D.9.12 the Permittee shall maintain the records of ~~once per day~~ visible emission notations **as required by Condition D.9.12** of the Hot Metal Transfer and Desulfurization Stations baghouse discharge NS6144,

Secondary Baghouse stack NS6123, No. 2 Q-BOP Gas Cleaning System Stacks NS6124 and NS612, and the LMF 3 Hot Fume and Material Handling Baghouse stack NS6148. The Permittee shall include in its daily record of when a visible emission notation is not taken and the reason for the lack of visible emission notation (e.g. the process did not operate that day).

Response 5:

IDEM, OAQ has decided that with regards to record keeping requirements for visible emission notations, the Permittee needs to make a record of some sort every day. IDEM, OAQ does not believe making some type of record (including checking a box stating the unit was not in operation that day) is overly burdensome.

No change has been made as a result of this comment.

Comment 6:

Condition D.18.9(d) removed the word “established” when updating the condition language. Condition D.18.9(d) should add the word “established back to the condition.

Condition D.18.9(d) should read:

(d) When for any one reading, the pump discharge pressure is outside of the normal range, the Permittee shall take a reasonable response. The normal range for this unit is a range of 55 and 70 pounds per square inch of water (psi) unless a different upper-bound and lower-bound value for this range is **established** during the latest stack test. Section C – Response to Excursions or Exceedances contains the Permittee’s obligation with regard to the reasonable response steps required by this condition. A pump discharge pressure that is outside of 55 and 70 psi, or a range established during the latest stack test, is not a deviation from this permit. Failure to take response steps shall be considered a deviation from this permit.

Response 6:

Condition D.18.9 has been revised as follows:

D.18.9 Scrubber Monitoring [40 CFR Part 64]

(a) ***

(b) ***

(c) ***

(d) When for any one reading, the pump discharge pressure is outside the normal range, the Permittee shall take a reasonable response. The normal range for this unit is a range of 55 and 70 pounds per square inch of water (psi) unless a different upper-bound or lower-bound value for this range is **established** during the latest stack test. Section C - Response to Excursions or Exceedances contains the Permittee's obligation with regard to the reasonable response steps required by this condition. A pump discharge pressure that is outside a range of 55 and 70 psi, or a range established during the latest stack test, is not a deviation from this permit. Failure to take response steps shall be considered a deviation from this permit.

(e) ***

Indiana Department of Environmental Management
Office of Air Quality

Technical Support Document (TSD) for a Part 70 Significant Source and Significant Permit Modification

Source Description and Location

Source Name:	U.S. Steel - Gary Works
Source Location:	One North Broadway, Gary, IN 46402
County:	Lake
SIC Code:	3312
Operation Permit No.:	T 089-29907-00121
Operation Permit Issuance Date:	December 20, 2013
Significant Source Modification No.:	089-33648-00121
Significant Permit Modification No.:	089-33651-00121
Permit Reviewer:	Kristen Willoughby

Source Definition

This integrated steel mill consists of a main mill and eleven (11) on-site contractors:

(a) U. S. Steel - Gary Works, plant Id 089-00121, the primary operation, located at One North Broadway, Gary, Indiana 46402;

(b) IMS Division, Tube City IMS, plant Id 089-00132, the on-site contractor, located at One North Broadway, Gary, Indiana 46402;

(c) South Shore Slag LLC, plant Id 089-00133, the on-site contractor, located at One North Buchanan Street, Gary, Indiana 46402;

(d) Harsco Metals, plant Id 089-00170, the on-site contractor, located at One North Broadway, Gary, Indiana 46402;

(e) Central Teaming Company, plant Id 089-00172, the on-site contractor, located at One North Broadway, Gary, Indiana 46402;

(f) Mid-Continent Coal and Coke Company, plant Id 089-00173, the on-site contractor, located at One North Broadway, Gary, Indiana 46402;

(g) Tube City Division, Tube City IMS, plant Id 089-00174, the on-site contractor located at One North Broadway, Gary, Indiana 46401;

(h) AKJ Industries, Inc., plant Id 089- 00505, the on-site contractor, located at One North Broadway, Gary, Indiana 46402;

(i) Critser Companies, plant Id 089- 05333, the on-site contractor, located at One North Broadway, Gary, Indiana 46402.

Separate Part 70 permits will be issued to U.S. Steel - Gary Works and each on site contractor, solely for administrative purposes.

Company Name	Part 70 Permit Number
U.S. Steel - Gary Works	089-29907-00121
Central Teaming Company, Inc.	089-29688-00172
Harsco Metals	089-29718-00170
IMS Division, Tube City IMS	089-29892-00132
AKJ Industries, Inc.	089-30619-00505
South Shore Slag LLC	089-29698-00133
Mid-Continent Coal and Coke Company	089-29400-00173
Tube City Division, Tube City IMS	089-29893-00174
Critser Companies	089-28097-05333

Note: On November 21, 2013 and December 10, 213, Fritz Enterprises Inc. submitted applications for material processing on the U.S. Steel - Gary Works site. At this time a permit has not been issued for this company. Upon issuance of a permit (application No. T089-33892-00578 and 089-33961-00578), Fritz Enterprises, Inc. will be considered one source with U. S. Steel - Gary Works.

Existing Approvals

The source was issued Part 70 Operating Permit No. T089-29907-00121 on December 20, 2013.

County Attainment Status

The source is located in Lake County.

Pollutant	Designation
SO_2	Better than national standards.
CO	Attainment effective February 18, 2000, for the part of the city of East Chicago bounded by Columbus Drive on the north; the Indiana Harbor Canal on the west; 148th Street, if extended, on the south; and Euclid Avenue on the east. Unclassifiable or attainment effective November 15, 1990, for the remainder of East Chicago and Lake County.
O_3	40 CFR 81.315 as amended by 77 FR 34228.[1,2]
$PM_{2.5}$	Unclassifiable or attainment effective December 13, 2009, for the 24-hour $PM_{2.5}$ standard.
$PM_{2.5}$	Attainment effective February 6, 2012, for the annual $PM_{2.5}$ standard.
PM_{10}	Attainment effective March 11, 2003, for the cities of East Chicago, Hammond, Whiting, and Gary. Unclassifiable effective November 15, 1990, for the remainder of Lake County.
NO_2	Cannot be classified or better than national standards.
Pb	Not designated.

[1]The U. S. EPA has acknowledged in both the proposed and final rulemaking for this redesignation that the anti-backsliding provisions for the 1-hour ozone standard no longer apply as a result of the redesignation under the 8-hour ozone standard. Therefore, permits in Lake County are no longer subject to review pursuant to Emission Offset, 326 IAC 2-3.
Unclassifiable or attainment effective February 6, 2012, for PM2.5.
[2]The department has filed a legal challenge to U.S. EPA's designation in 77 FR 34228.

(a) Ozone Standards
U.S. EPA, in the Federal Register Notice 77 FR 112 dated June 11, 2012, has designated Lake County as nonattainment for ozone. On August 1, 2012, the air pollution control board issued an emergency rule adopting the U.S. EPA's designation. This rule became effective August 9, 2012. IDEM does not agree with U.S. EPA's designation of nonattainment. IDEM filed a suit against U.S. EPA in the U.S. Court of Appeals for the DC Circuit on July 19, 2012. However, in order to ensure that sources are not potentially liable for a violation of the Clean Air Act, the OAQ is following the U.S. EPA's designation. Volatile organic compounds (VOC) and Nitrogen Oxides (NO_x) are regulated

under the Clean Air Act (CAA) for the purposes of attaining and maintaining the National Ambient Air Quality Standards (NAAQS) for ozone. Therefore, VOC and NO_x emissions are considered when evaluating the rule applicability relating to ozone. Therefore, VOC and NO_x emissions were evaluated pursuant to the requirements of Emission Offset, 326 IAC 2-3.

(b) $PM_{2.5}$
Lake County has been classified as attainment for $PM_{2.5}$. On May 8, 2008, U.S. EPA promulgated the requirements for Prevention of Significant Deterioration (PSD) for $PM_{2.5}$ emissions. These rules became effective on July 15, 2008. On May 4, 2011, the air pollution control board issued an emergency rule establishing the direct $PM_{2.5}$ significant level at ten (10) tons per year. This rule became effective June 28, 2011. Therefore, direct $PM_{2.5}$, SO_2, and NOx emissions were reviewed pursuant to the requirements for Prevention of Significant Deterioration (PSD), 326 IAC 2-2.

(c) Other Criteria Pollutants
Lake County has been classified as attainment or unclassifiable in Indiana for all other criteria pollutants. Therefore, these emissions were reviewed pursuant to the requirements for Prevention of Significant Deterioration (PSD), 326 IAC 2-2.

Fugitive Emissions

Since this source is classified as an iron and steel mill (326 IAC 2-7-1(22)(B)(v)), it is considered to be in one (1) of the twenty-eight (28) listed source categories, as specified in 326 IAC 2-2, 326 IAC 2-3, or 326 IAC 2-7. Therefore, fugitive emissions are counted toward the determination of PSD, Emission Offset, and Part 70 Permit applicability.

Source Status

The table below summarizes the potential to emit of the entire source, prior to the proposed modification, after consideration of all enforceable limits established in the effective permits:

Pollutant	**Emissions** (ton/yr)
PM	Greater Than 100
PM_{10}	Greater Than 100
$PM_{2.5}$	Greater Than 100
SO_2	Greater Than 100
VOC	Greater Than 100
CO	Greater Than 100
NO_X	Greater Than 100
GHGs as CO_2e	Greater Than 100,000
HAPs	
Any Single HAP	Greater Than 10
Total HAPs	Greater Than 25

(a) This existing source is a major stationary source, under PSD (326 IAC 2-2), because a regulated pollutant is emitted at a rate of 100 tons per year or more, emissions of GHGs are equal to or greater than one hundred thousand (100,000) tons of CO_2 equivalent emissions (CO_2e) per year and it is one of the twenty-eight (28) listed source categories, as specified in 326 IAC 2-2-1(ff)(1).

(b) This existing source is a major stationary source, under Emission Offset (326 IAC 2-3), because VOC and NOx, a nonattainment regulated pollutant, is emitted at a rate of 100 tons per year or more.

(c) These emissions are based upon the Technical Support Document for AA No. 089-31581-00121.

This existing source is a major source of HAPs, as defined in 40 CFR 63.2, because HAP emissions are greater than ten (10) tons per year for a single HAP and greater than twenty-five (25) tons per year for a combination of HAPs. Therefore, this source is a major source under Section 112 of the Clean Air Act (CAA).

Description of Proposed Modification

The Office of Air Quality (OAQ) has reviewed a modification application, submitted by U.S. Steel - Gary Works on September 13, 2013, relating to a new Capped Argon Bubbling (CAB) Station exhausting to the existing LMF 3 Hot Fume and Material Handling Baghouse NS3137. The following is a list of the proposed emission unit and pollution control device:

(a) One (1) Capped Argon Bubble (CAB) Station, approved in 2014 for construction, identified as NSC40296, with a maximum capacity of 477,000 tons per year, using the No. 3 LMF Hot Fume and Material Handling Baghouse NS3137 as control, and exhausting to stack NS6148. All uncontrolled emissions exhaust through the roof monitor NS6634.

Enforcement Issues

There are no pending enforcement actions related to this modification.

Stack Summary

Stack ID	Operation	Height (ft)	Diameter (ft)	Flow Rate (acfm)	Temperature (^{0}F)
NS6148	NSC40296	40	9.65 x 10.31	48,000	151

Emission Calculations

See Appendix A and B of this Technical Support Document for detailed emission calculations.

Permit Level Determination – Part 70

Pursuant to 326 IAC 2-1.1-1(16), Potential to Emit is defined as “the maximum capacity of a stationary source or emission unit to emit any air pollutant under its physical and operational design. Any physical or operational limitation on the capacity of a source to emit an air pollutant, including air pollution control equipment and restrictions on hours of operation or type or amount of material combusted, stored, or processed shall be treated as part of its design if the limitation is enforceable by the U. S. EPA, IDEM, or the appropriate local air pollution control agency.”

The following table is used to determine the appropriate permit level under 326 IAC 2-7-10.5. This table reflects the PTE before controls. Control equipment is not considered federally enforceable until it has been required in a federally enforceable permit.

Increase in PTE Before Controls of the Modification	
Pollutant	**Potential To Emit** (ton/yr)
PM	56.05
PM_{10}	56.05
$PM_{2.5}$	56.05
SO_2	-
VOC	-
CO	11.93
NO_X	0.72
Single HAPs (Lead)	0.04
Total HAPs	0.04

Appendix A of this TSD reflects the unrestricted potential emissions of the modification.

This source modification is subject to 326 IAC 2-7-10.5(g)(4), any modification with a potential to emit greater than or equal to twenty-five (25) tons per year of PM, PM_{10}, or direct $PM_{2.5}$. Additionally, the modification will be incorporated into the Part 70 Operating Permit through a significant permit modification issued pursuant to 326 IAC 2-7-12(d), because it requires a case-by-case determination of an emission limitation and significant changes to monitoring and record keeping.

Permit Level Determination – PSD and Emission Offset

The table below summarizes the potential to emit, reflecting all limits, of the emission units. Any control equipment is considered federally enforceable only after issuance of this Part 70 source and permit modification, and only to the extent that the effect of the control equipment is made practically enforceable in the permit.

	Potential to Emit (ton/yr)								
Process / Emission Unit	**PM**	**PM_{10}**	**$PM_{2.5}$***	**SO_2**	**VOC**	**CO**	**NO_X**	**GHGs**	**Pb**
NSC40296 **-** Limited Emissions	11.83	11.83	8.78	-	-	11.93	0.72	18.74	0.04
NSC40296 - Fugitive Emissions	1.12	1.12	1.12	-	-	-	-	-	-
Total for Modification	12.95	12.95	9.9	-	-	11.93	0.72	18.74	0.04
Significant Level - PSD	25	15	10	40	NA	100	40	75,000 CO_2e	0.6
Significant Level - EO	NA	NA	NA	NA	40	NA	40	NA	NA

*$PM_{2.5}$ listed is direct $PM_{2.5}$.
Note: There will be no increased utilization upstream or downstream of the new CAB Station because steel does not have to go through a secondary treatment process. The Permittee has the ability to bypass secondary treatment and go straight to casting.

This modification to an existing major stationary source is not major because the emissions increase is less than the PSD significant levels. Therefore, pursuant to 326 IAC 2-2, the PSD requirements do not apply.

This modification to an existing major stationary source is not major because the emissions increase is less than the Emission Offset significant levels. Therefore, pursuant to 326 IAC 2-3, the Emission Offset requirements do not apply.

Since this source is considered a major PSD source and the unrestricted potential to emit of this modification is greater than twenty-five (25) tons of PM per year and ten (10) tons of $PM_{2.5}$ per year, this source has elected to limit the potential to emit of this modification as follows:

(a) The PM emission rate from the Capped Argon Bubbling (CAB) Station, identified as NSC40296, controlled by the No. 3 LMF Hot Fume and Material Handling Baghouse NS3137, shall not exceed 2.7 pounds per hour.

(b) The PM_{10} emission rate from the Capped Argon Bubbling (CAB) Station, identified as NSC40296, controlled by the No. 3 LMF Hot Fume and Material Handling Baghouse NS3137, shall not exceed 2.7 pounds per hour.

(c) The $PM_{2.5}$ emission rate from the Capped Argon Bubbling (CAB) Station, identified as NSC40296, controlled by the No. 3 LMF Hot Fume and Material Handling Baghouse NS3137, shall not exceed 2.0 pounds per hour.

Compliance with these emission limits will ensure that the potential to emit from this modification is less than twenty-five (25) tons of PM per year, less than fifteen (15) tons of PM_{10} per year, and less than ten (10) tons of $PM_{2.5}$ per year and therefore will render the requirements of 326 IAC 2-2 not applicable.

Project Aggregation

Two separate projects are currently the subject of permitting at IDEM:

1. AA No. 089-33653-00121 involves the installation of a dust collector for hygiene dust reduction, the installation of one (1) new conveyor, and the removal of drop points associated with the CASP C that were not constructed.

2. SSM No. 089-33648-00121 and SPM No. 089-33651-00121 involve a new Capped Argon Bubbling (CAB) Station exhausting to the existing LMF 3 Hot Fume and Material Handling Baghouse NS3137.

There is no overlap between the new Capped Argon Bubbling (CAB) Station and the proposed nuisance dust collector at the Carbon Alloy Synthesis Plants. These two proposed projects will be located at completely different divisions within Gary Works and neither one will impact the other in any way.

Contemporaneous Netting

On August 24, 2010, a Significant Source Modification no. 089-28848-00121 for four (4) Carbon Alloy Synthesis Plant (CASP) modules was issued. In order to render the requirements of 326 IAC 2-2 (PSD), 326 IAC 2-3 (Emission Offset), and 326 IAC 2-1.1-5 (Nonattainment NSR) not applicable the Permittee performed a contemporaneous netting analysis. This modification is not complete. Therefore, the contemporaneous period is still open. The CASP netting analysis has been revised as follows (deleted language appears as ~~strikethroughs~~ and new language appears in **bold)**. Detailed calculations for the CASP project are included as Appendix B of this Technical Support Document.

	Potential to Emit (ton/yr)							
Process / Emission Unit	PM	PM_{10}	$PM_{2.5}$	SO_2	VOC	CO	NO_X	Pb
CASP C	59.06	58.71	58.71	68.80	13.32	7.13	68.91	0.58
CASP D	59.06	58.71	58.71	68.80	13.32	7.13	68.91	0.58
Phase 1 Material Handling	77.43	28.97	3.87	0	0	0	0	-
Increased Utilization	8.35	4.91	4.91	0.04	0.34	5.15	6.13	3.07E-05
Total for Phase 1 of Modification	203.90	151.30	126.20	137.64	26.98	19.42	143.95	1.16
Contemporaneous Increases	~~92.59~~ **154.85**	~~47.49~~ **87.58**	~~46.08~~ **72.25**	~~11.31~~ **12.02**	~~26.98~~ **37.61**	~~113.65~~ **195.09**	~~70.41~~ **124.95**	~~0~~ **0.04**
Contemporaneous Decreases								
#3 COB Shutdown	288.20	255.62	255.62	149.52	148.95	263.32	501.06	1.47
#3 COB Pre-Carb. Shutdown	75.45	76.87	76.87	4.73	374.25	2554.96	32.18	0
Net Emissions Increase after Phase 1	~~-67.15~~ **-4.89**	~~-133.70~~ **-93.60**	~~-160.21~~ **-134.04**	~~-5.30~~ **-4.59**	~~-465.35~~ **-458.61**	~~-2685.21~~ **-2603.77**	~~-318.87~~ **-264.32**	~~-0.31~~ **-0.27**
CASP A	59.06	58.71	58.71	68.80	13.32	7.13	68.91	0.58
CASP B	59.06	58.71	58.71	68.80	13.32	7.13	68.91	0.58
Phase 2 Increases to Project Material Handling	76.25	39.35	5.33	0	0	0	0	0
Contemporaneous Decreases								
#5 COB Shutdown	124.94	134.72	134.72	107.73	98.06	161.02	329.25	0.43
#7 COB Shutdown	122.72	107.83	107.83	66.23	102.84	168.87	345.31	0.45
#5/6 Quench Tower Shutdown	28.06	6.42	6.42	0	0	0	1.36	0
Net Emissions Increase for Modification	~~-148.49~~ **-86.23**	~~-225.89~~ **-185.80**	~~-286.42~~ **-260.25**	~~-41.65~~ **-40.94**	~~-640.96~~ **-634.22**	~~-3000.84~~ **-2919.40**	~~-855.60~~ **-801.05**	~~-0.03~~ **0.01**
Significant Level 326 IAC 2-2 (PSD)	25	15	10	40	n/a	100	40	0.60
Significant Level 326 IAC 2-3 (Emission Offset)	n/a	n/a	n/a	n/a	40	n/a	40	n/a

Note: There are no greenhouse gas emissions associated with the new emission unit or hygiene dust collector. The CASP project predates the GHG rule.
Note: Although, equipment permitted as part of CASP C is being removed from the permit, the emissions from the equipment continue to be reflected in the netting analysis conducted for the CASP project as issued in Significant Source Modification No. 089-28848-00121 on August 4, 2010 and Significant Permit Modification No. 089-29236-00121 and any subsequent adjustments to said netting analysis.

The table below summarizes the CASP project including all contemporaneous projects issued to date. (Note: the table below was generated from the above table, with bold text un-bolded and strikethrough text deleted)

	Potential to Emit (ton/yr)							
Process / Emission Unit	**PM**	**PM_{10}**	**$PM_{2.5}$**	**SO_2**	**VOC**	**CO**	**NO_X**	**Pb**
CASP C	59.06	58.71	58.71	68.80	13.32	7.13	68.91	0.58
CASP D	59.06	58.71	58.71	68.80	13.32	7.13	68.91	0.58
Phase 1 Material Handling	77.43	28.97	3.87	0	0	0	0	-
Increased Utilization	8.35	4.91	4.91	0.04	0.34	5.15	6.13	3.07E-05
Total for Phase 1 of Modification	**203.90**	**151.30**	**126.20**	**137.64**	**26.98**	**19.42**	**143.95**	**1.16**
Contemporaneous Increases	154.85	87.58	72.25	12.02	37.61	195.09	124.95	0.04
Contemporaneous Decreases								
#3 COB Shutdown	288.20	255.62	255.62	149.52	148.95	263.32	501.06	1.47
#3 COB Pre-Carb. Shutdown	75.45	76.87	76.87	4.73	374.25	2554.96	32.18	0

	Potential to Emit (ton/yr)							
Process / Emission Unit	**PM**	**PM_{10}**	**$PM_{2.5}$**	**SO_2**	**VOC**	**CO**	**NO_X**	**Pb**
Net Emissions Increase after Phase 1	**-4.89**	**-93.60**	**-134.04**	**-4.59**	**-458.61**	**-2603.77**	**-264.32**	**-0.27**
CASP A	59.06	58.71	58.71	68.80	13.32	7.13	68.91	0.58
CASP B	59.06	58.71	58.71	68.80	13.32	7.13	68.91	0.58
Phase 2 Increases to Project Material Handling	76.25	39.35	5.33	0	0	0	0	0
Contemporaneous Decreases								
#5 COB Shutdown	124.94	134.72	134.72	107.73	98.06	161.02	329.25	0.43
#7 COB Shutdown	122.72	107.83	107.83	66.23	102.84	168.87	345.31	0.45
#5/6 Quench Tower Shutdown	28.06	6.42	6.42	0	0	0	1.36	0
Net Emissions Increase for Modification	**-86.23**	**-185.80**	**-260.25**	**-40.94**	**-634.22**	**-2919.40**	**-801.05**	**0.01**
Significant Level 326 IAC 2-2 (PSD)	25	15	10	40	n/a	100	40	0.60
Significant Level 326 IAC 2-3 (Emission Offset)	n/a	n/a	n/a	n/a	40	n/a	40	n/a

Note: There are no greenhouse gas emissions associated with the new emission unit or hygiene dust collector. The CASP project predates the GHG rule.
Note: Although, equipment permitted as part of CASP C is being removed from the permit, the emissions from the equipment continue to be reflected in the netting analysis conducted for the CASP project as issued in Significant Source Modification No. 089-28848-00121 on August 4, 2010 and Significant Permit Modification No. 089-29236-00121 and any subsequent adjustments to said netting analysis.

The CASP Project is not major because the emissions increase is less than the PSD significant levels. Therefore, pursuant to 326 IAC 2-2, the PSD requirements do not apply.

The CASP project is not major because the emissions increase is less than the Emission Offset significant levels. Therefore, pursuant to 326 IAC 2-3, the Emission Offset requirements do not apply.

Federal Rule Applicability Determination

The following federal rules are applicable to the source due to this modification:

NSPS:

(a) The New Source Performance Standards (NSPS) for Steel Plants: Electric Arc Furnaces and Argon-Oxygen Decarburization Vessels Constructed After August 17, 1983 (40 CFR 60, Subpart AAa) does not apply to the new Capped Argon Bubbling (CAB) Station because it is not an argon-oxygen decarburization vessel as defined in 40 CFR 60.271a.

(b) There are no New Source Performance Standards (NSPS)(326 IAC 12 and 40 CFR Part 60) applicable to this proposed modification.

NESHAP:

(c) This source is subject to the National Emission Standards for Hazardous Air Pollutants for Integrated Iron and Steel Manufacturing Facilities (40 CFR 63, Subpart FFFFF), which is incorporated by reference as 326 IAC 20-93. The unit subject to this rule include the following:

(1) One (1) Capped Argon Bubble (CAB) Station, approved in 2014 for construction, identified as NSC40296, with a maximum capacity of 477,000 tons per year, using LMF 3 Hot Fume and Material Handling Baghouse NS3137 as control, and exhausting to stack NS6148. All uncontrolled emissions exhaust through the roof monitor NS6634.

Nonapplicable portions of the NESHAP will not be included in the permit. This source is subject to the following portions of Subpart FFFFF:

(1) 40 CFR 63.7780
(2) 40 CFR 63.7781
(3) 40 CFR 63.7782
(4) 40 CFR 63.7783 (a), (e)
(5) 40 CFR 63.7790 (a)
(6) 40 CFR 63.7800 (a), (b)(1), (b)(2), (b)(4)
(7) 40 CFR 63.7810
(8) 40 CFR 63.7820 (a), (b)
(9) 40 CFR 63.7821 (a), (c)
(10) 40 CFR 63.7822 (a), (b), (h), (i)
(11) 40 CFR 63.7823 (a), (b)
(12) 40 CFR 63.7824 (a)
(13) 40 CFR 63.7825 (a), (c)
(14) 40 CFR 63.7830 (a)(1), (b)
(15) 40 CFR 63.7831 (a)(1-7), (b), (c), (d), (e), (f)
(16) 40 CFR 63.7832
(17) 40 CFR 63.7833 (a), (b), (c)
(18) 40 CFR 63.7834
(19) 40 CFR 63.7835
(20) 40 CFR 63.7840 (a), (b), (d), (e)
(21) 40 CFR 63.7841
(22) 40 CFR 63.7842
(23) 40 CFR 63.7843
(24) 40 CFR 63.7850
(25) 40 CFR 63.7851
(26) 40 CFR 63.7852

The provisions of 40 CFR 63 Subpart A – General Provisions, which are incorporated as 326 IAC 20-1-1, apply to the facility described in this section except when otherwise specified in 40 CFR 63 Subpart FFFF.

(d) Pursuant to 40 CFR 64.2, Compliance Assurance Monitoring (CAM) is applicable to new or modified emission units that involve a pollutant-specific emission unit and meet the following criteria:

(1) has a potential to emit before controls equal to or greater than the Part 70 major source threshold for the pollutant involved;

(2) is subject to an emission limitation or standard for that pollutant; and

(3) uses a control device, as defined in 40 CFR 64.1, to comply with that emission limitation or standard.

The following table is used to identify the applicability of each of the criteria, under 40 CFR 64.1, to each new or modified emission unit involved:

CAM Applicability Analysis							
Emission Unit	**Control Device Used**	**Emission Limitation** (Y/N)	**Uncontrolled PTE** (ton/yr)	**Controlled PTE** (ton/yr)	**Part 70 Major Source Threshold** (ton/yr)	**CAM Applicable** (Y/N)	**Large Unit** (Y/N)
NSC40296 - PM/PM10/ PM2.5	Y	Y	55.09	0.54	100	N	N
NSC40296 - Lead	Y	N	0.04	4.35E-04	0.6	N	N

Based on this evaluation, the requirements of 40 CFR Part 64, CAM are not applicable to any of the new units as part of this modification.

State Rule Applicability Determination

The following state rules are applicable to the source due to the modification:

326 IAC 2-2 and 2-3 (PSD and Emission Offset)
PSD and Emission Offset applicability is discussed under the Permit Level Determination – PSD and Emission Offset section.

326 IAC 2-4.1 (Major Sources of Hazardous Air Pollutants (HAP))
Pursuant to 326 IAC 2-4.1-1(b)(2), the requirements of 326 IAC 2-4.1-1 do not apply to a major source specifically regulated, or exempt from regulation, by a standard issued pursuant to Section 112(d), 112(h), or 112(j) of the CAA.

326 IAC 6.8-1-2 (Particulate Matter Limitations for Lake County)
Pursuant to 326 IAC 6.8-1-2(a), the particulate matter (PM) from NSC40296 shall not exceed seven-hundredths (0.07) gram per dry standard cubic meter (g/dscm) (three-hundredths (0.03) grain per dry standard cubic foot (dscf)).

The LMF 3 Hot Fume and Material Handling Baghouse NS3137 shall be in operation at all times NSC40296 is in operation, in order to comply with this limit.

326 IAC 6.8-2-38 (Lake County: PM10 Emission Requirements)
Pursuant to 326 IAC 6.8-2-38, the PM_{10} emissions from NSC40296, which is controlled by the Number 2 Q-BOP LMF Number 3 Hot Fume Exhaust and Material Handling Baghouse Stack NS6148, shall not exceed 0.0070 grains per dry standard cubic foot of exhaust air and 2.70 pounds per hour.

The LMF 3 Hot Fume and Material Handling Baghouse NS3137 shall be in operation at all times NSC40296 is in operation, in order to comply with this limit.

326 IAC 9 (Carbon Monoxide Emission Limitations)
An emission limitation has not been established in 326 IAC 9-1-2 for Capped Argon Bubbling operations. Therefore, the requirements of 326 IAC 9 are not applicable to NSC40296.

326 IAC 15 (Lead Rules)
An emission limitation has not been established in 326 IAC 15-1-2 for Capped Argon Bubbling operations. Therefore, the requirements of 326 IAC 15 are not applicable to NSC40296.

Compliance Determination and Monitoring Requirements

Permits issued under 326 IAC 2-7 are required to ensure that sources can demonstrate compliance with all applicable state and federal rules on a continuous basis. All state and federal

rules contain compliance provisions; however, these provisions do not always fulfill the requirement for a continuous demonstration. When this occurs, IDEM, OAQ, in conjunction with the source, must develop specific conditions to satisfy 326 IAC 2-7-5. As a result, Compliance Determination Requirements are included in the permit. The Compliance Determination Requirements in Section D of the permit are those conditions that are found directly within state and federal rules and the violation of which serves as grounds for enforcement action.

If the Compliance Determination Requirements are not sufficient to demonstrate continuous compliance, they will be supplemented with Compliance Monitoring Requirements, also in Section D of the permit. Unlike Compliance Determination Requirements, failure to meet Compliance Monitoring conditions would serve as a trigger for corrective actions and not grounds for enforcement action. However, a violation in relation to a compliance monitoring condition will arise through a source's failure to take the appropriate corrective actions within a specific time period.

The Compliance Determination Requirements applicable to this modification are as follows:

(a) The Capped Argon Bubbling (CAB) Station has applicable compliance determination conditions as specified below:

(1) The No. 3 LMF Hot Fume and Material Handling Baghouse NS3137 for PM, PM10, and PM2.5 control shall be in operation and control emissions from the Capped Argon Bubbling (CAB) Station, identified as NSC40296, at all times the Capped Argon Bubbling (CAB) Station is in operation.

(2) Testing:

Summary of Testing Requirements					
Emission Unit	**Control Device**	**Timeframe for Testing**	**Pollutant**	**Frequency of Testing**	**Limit or Requirement**
NSC40296	NS3137	180 days	PM/PM_{10}	Once every 5 years	2.7 lbs/hr
NSC40296	NS3137	180 days	$PM_{2.5}$	Once every 5 years	2.0 lbs/hr

The compliance monitoring requirements applicable to this modification are as follows:

(b) The Capped Argon Bubbling (CAB) Station has applicable compliance monitoring conditions as specified below:

Visible Emissions Notations:
The Permittee shall perform daily visible emission notations of the No. 3 LMF Hot Fume and Material Handling Baghouse NS3137 controlling the Capped Argon Bubbling (CAB) Station.

These monitoring conditions are necessary because the baghouse for the Capped Argon Bubbling (CAB) Station must operate properly to ensure compliance with 326 IAC 6.8-2-38 (Lake County: PM10 Emission Requirements), 326 IAC 6.8-1-2 (Particulate Matter Limitations for Lake County), 326 IAC 2-2 (PSD), and 326 IAC 2-7 (Part 70)).

Proposed Changes

The changes listed below have been made to Part 70 Operating Permit Renewal No. T089-29907-00121. These corrections, changes, and removals may include Title I changes (ex changes that add or modify synthetic minor emission limits). Deleted language appears as ~~strikethroughs~~ and new language appears in **bold**:

Summary of Model Updates Throughout the Permit

(a) On November 3, 2011, the Indiana Air Pollution Control Board issued a revision to 326 IAC 2. The revision resulted in a change to the rule cite of the “responsible official” definition. The rule citation has been changed throughout the permit as follows:

326 IAC 2-7-1~~(34)~~**(35)**

(b) **Multiple Conditions - Responsible Official References**
326 IAC 2-7 requires that "a responsible official" perform certain actions. 326 IAC 2-7-1(35) allows for multiple people to meet the definition of "responsible official." Therefore, IDEM, OAQ is revising all instances of "the responsible official" to read "a responsible official".

(c) **Multiple Conditions - Certification Requirement References**
IDEM, OAQ has decided to clarify what rule requirements a certification needs to meet.

(d) The Northwest Regional Office has changed locations. The Region Office address and telephone numbers have been updated.

(e) On October 27, 2010, the Indiana Air Pollution Control Board issued revisions to 326 IAC 2. These revisions resulted in changes to the rule citations listed in the permit. These changes are not changes to the underlining provisions. The change is only to cite of these rules in Section B - Permit Renewal, Section B - Operational Flexibility, Section B - Emergency Provisions, and Section C - Response to Excursions or Exceedances.

(f) **Multiple Conditions - Typographical Errors, Language Clarification**
Throughout the permit, typographical and grammatical errors have been corrected. Additionally, changes to language for clarification or to align with the current preferred permit language conventions have been made.

Summary of Model Updates for B and C Conditions

IDEM, OAQ has made changes to some of the standard language in the B and C conditions of the permit to help clarify the intent of these conditions. The following revisions have been made to the B and C Sections of the permit:

(a) **Section B - Annual Compliance Certification**
IDEM, OAQ has decided to clarify Section B - Annual Compliance Certification to remove the initial certification period since it has already been submitted.

(b) **Section B - Preventive Maintenance Plan**
IDEM, OAQ has decided to clarify Section B - Preventive Maintenance Plan.

(c) **Section C - Fugitive Dust Emissions**
IDEM, OAQ has decided to clarify which portion of 326 IAC 6-4 is not federally enforceable.

(d) **Section C - Fugitive Particulate Matter Emissions**
IDEM, OAQ has changed the title, order, and wording of the condition formerly entitled Section C - Fugitive Dust Emissions to match 326 IAC 6.8-10-3. IDEM, OAQ has decided not to list the submission date of the Fugitive Dust Plan because the plan has been included with the permit and requires permit action to change the plan.

(e) **Section C - Compliance Monitoring**
IDEM is changing the Section C - Compliance Monitoring Condition to clearly describe when new monitoring for new and existing units must begin.

(f) **Section C - Continuous Compliance Plan**
IDEM, OAQ has decided to clarify Section C - Continuous Compliance Plan.

(g) **Section C - Monitoring Methods**
IDEM, OAQ has removed Section C - Monitoring Methods. The conditions that require the monitoring or testing, if required, state what methods shall be used.

(h) **Section C - Instrument Specifications**
IDEM has clarified Section C - Instrument Specifications to indicate that the analog instrument must be capable of measuring the parameters outside the normal range.

(i) **Section C - Emergency Reduction Plans**
IDEM, OAQ has decided not to list the submission date of the ERP because the ERP can be updated without a permit change.

(j) **Section C - Response to Excursions or Exceedances**
IDEM, OAQ has decided to clarify the Permittee's responsibility under CAM.

(k) **Section C - General Record Keeping Requirements**
IDEM has added "where applicable" to the lists in Section C - General Record Keeping Requirements to more closely match the underlining rule.

(l) **Section C - General Reporting Requirements**
IDEM, OAQ has decided to clarify the Permittee's responsibility under CAM.

Summary of Model Updates for D Conditions

IDEM, OAQ has made changes to some of the standard language in conditions in the D Sections of the permit to help clarify the intent of these conditions. The following revisions have been made to the D Sections of the permit:

(a) IDEM, OAQ has revised the language in the parametric monitoring conditions to clarify when a range should be modified due to test results.

(b) IDEM, OAQ has revised the language in visible emission notations to clarify that a reasonable response may contain one or more steps.

(c) IDEM, OAQ has revised the first line of each Facility Description Box as follows:

~~Facility Description [326 IAC 2-7-5(14)]:~~ **Emission Unit Description:**

(d) IDEM, OAQ has decided it is not necessary for Permittee's to submit Natural Gas Fired Boiler Certifications. If necessary, the information contained in this form is required by other record keeping and reporting requirements.

(e) IDEM, OAQ has decided that scrubber flow rate parametric monitoring requirements should be in a separate condition from pressure drop requirements.

Changes Specific to This Permit

(a) 326 IAC 6.8-3-4 (Lake County Opacity Limitations) has been revoked. Therefore, Conditions D.8.3 and D. have been removed.

(b) Condition A.3, Section D.9, and Section F.9 were modified to include the new Capped Argon Bubbling (CAB) Station.

(c) Condition C.12 - Maintenance of Continuous Opacity Monitoring has been removed since these requirements can be found in Condition D.2.19.

The permit has been revised as follows:

A.3 Emission Units and Pollution Control Equipment Summary [326 IAC 2-7-4(c)(3)] [326 IAC 2-7-5(14)]

The integrated steel mill, U.S. Steel-Gary Works consists of the following:

***

Number Two Q-BOP Shop

***

(f) One (1) Capped Argon Bubble (CAB) Station, approved in 2014 for construction, identified as NSC40296, with a maximum capacity of 477,000 tons per year, using the No. 3 LMF Hot Fume and Material Handling Baghouse NS3137 as control, and exhausting to stack NS6148. All uncontrolled emissions exhaust through the roof monitor NS6634.

***

B.8 Certification [326 IAC 2-7-4(f)][326 IAC 2-7-6(1)][326 IAC 2-7-5(3)(C)]

(a) A certification required by this permit meets the requirements of 326 IAC 2-7-6(1) if:

(~~i~~**1**) it contains a certification by a "responsible official" as defined by 326 IAC 2-7-1 (~~34~~**(35**), and

(~~ii~~**2**) the certification states that, based on information and belief formed after reasonable inquiry, the statements and information in the document are true, accurate, and complete.

(b) The Permittee may use the attached Certification Form, or its equivalent~~,~~ with each submittal requiring certification. One (1) certification may cover multiple forms in one (1) submittal.

(c) A "responsible official" is defined at 326 IAC 2-7-1(~~34~~**35**).

B.9 Annual Compliance Certification [326 IAC 2-7-6(5)]

(a) The Permittee shall annually submit a compliance certification report which addresses the status of the source's compliance with the terms and conditions contained in this permit, including emission limitations, standards, or work practices. ~~The initial certification shall cover the time period from the date of final permit issuance through December 31 of the same year. All subsequent~~**All** certifications shall cover the time period from January 1 to December 31 of the previous year, and shall be submitted no later than April 15 of each year to:

***

(c) The annual compliance certification report shall include the following:

***

The submittal by the Permittee does require ~~the~~**a** certification **that meets the requirements of 326 IAC 2-7-6(1)** by ~~the~~**a** "responsible official" as defined by 326 IAC 2-7-1(~~34~~**35**).

B.10 Preventive Maintenance Plan [326 IAC 2-7-5(~~14)] [~~**12)][**326 IAC 1-6-3]

(a) The Permittee shall prepare and maintain Preventive Maintenance Plans (PMPs) within ninety (90) days after issuance of this permit, for the source as described in 326 IAC 1-6-3. At a minimum, the PMPs shall include:

***

The Permittee shall implement the PMPs.

(b) If required by specific condition(s) in Section D of this permit where no PMP was previously required, the Permittee shall prepare and maintain Preventive Maintenance Plans (PMPs) no later than ninety (90) days after issuance of this permit or ninety (90) days after initial start-up, whichever is later, including the following information on each facility:

***

The PMP extension notification does not require a certification that meets the requirements of 326 IAC 2-7-6(1) by a "responsible official" as defined by 326 IAC 2-7-1(~~34~~**35**).

The Permittee shall implement the PMPs.

(c) A copy of the PMPs shall be submitted to IDEM, OAQ upon request and within a reasonable time, and shall be subject to review and approval by IDEM, OAQ. IDEM, OAQ may require the Permittee to revise its PMPs whenever lack of proper maintenance causes or is the primary contributor to an exceedance of any limitation on emissions. The PMPs and their submittal do not require a certification that meets the requirements of 326 IAC 2-7-6(1) by a "responsible official" as defined by 326 IAC 2-7-1(~~34~~**35**).

(d) ***

B.11 Emergency Provisions [326 IAC 2-7-16]

(a) An emergency, as defined in 326 IAC 2-7-1(12), is not an affirmative defense for an action brought for noncompliance with a federal or state health-based emission limitation.

(b) An emergency, as defined in 326 IAC 2-7-1(12), constitutes an affirmative defense to an action brought for noncompliance with a technology-based emission limitation if the affirmative defense of an emergency is demonstrated through properly signed, contemporaneous operating logs or other relevant evidence that describe the following:

(1) An emergency occurred and the Permittee can, to the extent possible, identify the causes of the emergency;

(2) The permitted facility was at the time being properly operated;

(3) During the period of an emergency, the Permittee took all reasonable steps to minimize levels of emissions that exceeded the emission standards or other requirements in this permit;

(4) For each emergency lasting one (1) hour or more, the Permittee notified IDEM, OAQ~~,~~ **or Northwest Regional Office** within four (4) daytime business hours after the beginning of the emergency, or after the emergency was discovered or reasonably should have been discovered;

Telephone Number: 1-800-451-6027 (ask for Office of Air Quality, Compliance and Enforcement Branch), or
Telephone Number: 317-233-0178 (ask for **Office of Air Quality,** Compliance and Enforcement Branch)
Northwest Regional Office phone: (219) 464-0233; fax: (219) 464-0553.

(5) For each emergency lasting one (1) hour or more, the Permittee submitted the attached Emergency Occurrence Report Form or its equivalent, either by mail or facsimile to:

***

The notification which shall be submitted by the Permittee does not require a certification that meets the requirements of 326 IAC 2-7-6(1) by a "responsible official" as defined by 326 IAC 2-7-1(~~34~~**35**).

(6) ***

(e) The Permittee seeking to establish the occurrence of an emergency shall make records available upon request to ensure that failure to implement a PMP did not cause or contribute to an exceedance of any limitations on emissions. However, IDEM, OAQ may require that the Preventive Maintenance Plans required under 326 IAC 2-7-4(c)(~~9~~**8**) be revised in response to an emergency.

(f) ***

B.15 Permit Modification, Reopening, Revocation and Reissuance, or Termination [326 IAC 2-7-5(6)(C)][326 IAC 2-7-8(a)][326 IAC 2-7-9

(a) This permit may be modified, reopened, revoked and reissued, or terminated for cause. The filing of a request by the Permittee for a Part 70 Operating Permit modification, revocation and reissuance, or termination, or of a notification of planned changes or anticipated noncompliance does not stay any condition of this permit. [326 IAC 2-7-5(6)(C)] The notification by the Permittee does require a certification that meets the requirements of 326 IAC 2-7-6(1) by a "responsible official" as defined by 326 IAC 2-7-1(~~34~~**35**).

***

B.16 Permit Renewal [326 IAC 2-7-3][326 IAC 2-7-4][326 IAC 2-7-8(e)]

(a) The application for renewal shall be submitted using the application form or forms prescribed by IDEM, OAQ and shall include the information specified in 326 IAC 2-7-4. Such information shall be included in the application for each emission unit at this source, except those emission units included on the trivial or insignificant activities list contained in 326 IAC 2-7-1(21) and 326 IAC 2-7-1(~~40~~**42**). The renewal application does require a certification that meets the requirements of 326 IAC 2-7-6(1) by a "responsible official" as defined by 326 IAC 2-7-1(~~34~~**35**).

***

B.17 Permit Amendment or Modification [326 IAC 2-7-11][326 IAC 2-7-12] [40 CFR 72]

***

(b) Any application requesting an amendment or modification of this permit shall be submitted to:

***

Any such application does require a certification that meets the requirements of 326 IAC 2-7-6(1) by a "responsible official" as defined by 326 IAC 2-7-1(~~34~~**35**).

(c) ***

B.19 Operational Flexibility [326 IAC 2-7-20][326 IAC 2-7-10.5]

(a) The Permittee may make any change or changes at the source that are described in 326 IAC 2-7-20(b) or (c) without a prior permit revision, if each of the following conditions is met:

***

(5) The Permittee maintains records on-site, on a rolling five (5) year basis, which document all such changes and emission trades that are subject to 326 IAC 2-7-20(b~~) or~~**)(1) and** (c**)(1**). The Permittee shall make such records available, upon reasonable request, for public review.

Such records shall consist of all information required to be submitted to IDEM, OAQ in the notices specified in 326 IAC 2-7-20(b)(1) and (c)(1).

(b) The Permittee may make Section 502(b)(10) of the Clean Air Act changes (this term is defined at 326 IAC 2-7-1(~~36~~**37**)) without a permit revision, subject to the constraint of 326 IAC 2-7-20(a). For each such Section 502(b)(10) of the Clean Air Act change, the required written notification shall include the following:

***

The notification which shall be submitted is not considered an application form, report or compliance certification. Therefore, the notification by the Permittee does not require a certification that meets the requirements of 326 IAC 2-7-6(1) by a "responsible official" as defined by 326 IAC 2-7-1(~~34~~**35**).

***

B.22 Transfer of Ownership or Operational Control [326 IAC 2-7-11]

(a) ***

(b) Any application requesting a change in the ownership or operational control of the source shall contain a written agreement containing a specific date for transfer of permit responsibility, coverage and liability between the current and new Permittee. The application shall be submitted to:

Indiana Department of Environmental Management
Permit Administration and Support Section, Office of Air Quality
100 North Senate Avenue
MC 61-53 IGCN 1003
Indianapolis, Indiana 46204-2251

~~The application which shall be submitted by the Permittee does require a certification that meets the requirements of 326 IAC 2-7-6(1) by a "responsible official" as defined by 326 IAC 2-7-1(34).~~

Any such application does require a certification that meets the requirements of 326 IAC 2-7-6(1) by a "responsible official" as defined by 326 IAC 2-7-1(~~34~~**35**).

(c) ***

C.4 Fugitive Dust Emissions [326 IAC 6-4]

The Permittee shall not allow fugitive dust to escape beyond the property line or boundaries of the property, right-of-way, or easement on which the source is located, in a manner that would violate 326 IAC 6-4 (Fugitive Dust Emissions). **326 IAC 6-4-2(4) is not federally enforceable.**

C.5 Fugitive ~~Dust~~**Particulate Matter** Emissions [326 IAC 6.8-10-3]

Pursuant to 326 IAC 6.8-10-3 **(formerly 326 IAC 6-1-11.1)** (Lake County Fugitive Particulate Matter Control Requirements), the particulate matter emissions from source wide activities shall meet the following requirements:

***

(c) The opacity of fugitive particulate emissions from **exposed areas shall not exceed ten percent (10%) on a six (6) minute average.**

(d) The opacity of fugitive particulate emissions from continuous transfer of material onto and out of storage piles shall not exceed ten percent (10%) on a three (3) minute average.

***

The Permittee shall achieve these limits by controlling fugitive particulate matter emissions according to the attached Fugitive Dust Control Plan~~ submitted on March 1, 2003~~.

C.7 Asbestos Abatement Projects [326 IAC 14-10] [326 IAC 18] [40 CFR 61, Subpart M]

***

(d) The notice to be submitted shall include the information enumerated in 326 IAC 14-10-3(3).

***

The notice shall include a signed certification from the owner or operator that the information provided in this notification is correct and that only Indiana licensed workers and project supervisors will be used to implement the asbestos removal project. The notifications do not require a certification that meets the requirements of 326 IAC 2-7-6(1) by a "responsible official" as defined by 326 IAC 2-7-1(~~34~~**35**).

(e) ***

C.8 Performance Testing [326 IAC 3-6]

(a) ***

no later than thirty-five (35) days prior to the intended test date. The protocol submitted by the Permittee does not require a certification that meets the requirements of 326 IAC 2-7-6(1) by a "responsible official" as defined by 326 IAC 2-7-1(~~34~~**35**).

(b) The Permittee shall notify IDEM, OAQ of the actual test date at least fourteen (14) days prior to the actual test date. The notification submitted by the Permittee does not require a certification that meets the requirements of 326 IAC 2-7-6(1) by a "responsible official" as defined by 326 IAC 2-7-1(~~34~~**35**).

(c) ***

C.11 Compliance Monitoring [326 IAC 2-7-5(3)][326 IAC 2-7-6(1)]**[40 CFR 64][326 IAC 3-8]**

(a) For new units:

Unless otherwise specified in the approval for the new emission unit(s), compliance monitoring for new emission units shall be implemented on and after the date of initial start-up.

(b) For existing units:
Unless otherwise specified in this permit, for all monitoring requirements not already legally required, the Permittee shall be allowed up to ninety (90) days from the date of permit issuance ~~or of initial start-up, whichever is later,~~ to begin such monitoring. I**f,** due to circumstances beyond the Permittee's control, any monitoring equipment required by this permit cannot be installed and operated no later than ninety (90) days after permit issuance ~~or the date of initial startup, whichever is later~~, the Permittee may extend the compliance schedule related to the equipment for an additional ninety (90) days provided the Permittee notifies:

Indiana Department of Environmental Management
Compliance and Enforcement Branch, Office of Air Quality
100 North Senate Avenue
MC 61-53 IGCN 1003
Indianapolis, Indiana 46204-2251

in writing, prior to the end of the initial ninety (90) day compliance schedule, with full justification of the reasons for the inability to meet this date.

The notification which shall be submitted by the Permittee does require a certification that meet**s** the requirements of 326 IAC 2-7-6(1) by a "responsible official" as defined by 326 IAC 2-7-1(~~34~~**35**).

~~Unless otherwise specified in the approval for the new emission unit(s), compliance monitoring for new emission units or emission units added through a source modification shall be implemented when operation begins.~~

(c) For monitoring required by CAM, at all times, the Permittee shall maintain the monitoring, including but not limited to, maintaining necessary parts for routine repairs of the monitoring equipment.

(d) For monitoring required by CAM, except for, as applicable, monitoring malfunctions, associated repairs, and required quality assurance or control activities (including, as applicable, calibration checks and required zero and span adjustments), the Permittee shall conduct all monitoring in continuous operation (or shall collect data at all required intervals) at all times that the pollutant-specific emissions unit is operating. Data recorded during monitoring malfunctions, associated repairs, and required quality assurance or control activities shall not be used for purposes of this part, including data averages and calculations, or fulfilling a minimum data availability requirement, if applicable. The owner or operator shall use all the data collected during all other periods in assessing the operation of the control device and associated control system. A monitoring malfunction is any sudden, infrequent, not reasonably preventable failure of the monitoring to provide valid data. Monitoring failures that are caused in part by poor maintenance or careless operation are not malfunctions.

~~C.12 Maintenance of Continuous Opacity Monitoring Equipment [326 IAC 2-7-5(3)(A)(iii)]~~

~~(a) The Permittee shall install, calibrate, maintain, and operate all necessary continuous opacity monitoring systems (COMS) and related equipment. For a boiler, the COMS shall be in operation at all times that the induced draft fan is in operation.~~

~~(b) All COMS shall meet the performance specifications of 40 CFR 60, Appendix B, Performance Specification No. 1, and are subject to monitor system certification requirements pursuant to 326 IAC 3-5.~~

~~(c) In the event that a breakdown of a COMS occurs, a record shall be made of the times and reasons of the breakdown and efforts made to correct the problem.~~

~~(d) Whenever a COMS is malfunctioning or is down for maintenance or repairs for a period of twenty-four (24) hours or more and a backup COMS is not online within twenty-four (24) hours of shutdown or malfunction of the primary COMS, the Permittee shall provide a certified opacity reader, who may be an employee of the Permittee or an independent contractor, to self-monitor the emissions from the emission unit stack.~~

~~(1) Visible emission readings shall be performed in accordance with 40 CFR 60, Appendix A, Method 9, for a minimum of five (5) consecutive six (6) minute averaging periods beginning not more than twenty-four (24) hours after the start of the malfunction or down time.~~

~~(2) Method 9 opacity readings shall be repeated for a minimum of five (5) consecutive six (6) minute averaging periods at least twice per day during daylight operations, with at least four (4) hours between each set of readings, until a COMS is online.~~

~~(3) Method 9 readings may be discontinued once a COMS is online.~~

~~(4) Any opacity exceedances determined by Method 9 readings shall be reported with the Quarterly Opacity Exceedances Reports.~~

~~(e) Nothing in this permit shall excuse the Permittee from complying with the requirements to operate a continuous opacity monitoring system pursuant to 326 IAC 3-5, (and 40 CFR 60 and/or 40 CFR 63).~~

C.~~13~~**12** Continuous Compliance Plan ~~(CCP)~~ [326 IAC 6.8-8-1] [326 IAC 6.8-8-8]

(a) Pursuant to 326 IAC 6.8-8-1, the Permittee shall submit to IDEM and maintain at source a copy of the Continuous Compliance Plan (CCP). The Permittee shall perform the inspections, monitoring and record keeping in accordance with the information in 326 IAC 6.8-8-5 through 326 IAC 6.8-8-7 or applicable procedures in the CCP.

(b) Pursuant to 326 IAC 6.8-8-8, the Permittee shall update the CCP, as needed, retain a copy **of** any changes and updates to the CCP at the source and make the updated CCP available for inspection by the department~~. If required by IDEM, OAQ,~~ The Permittee shall submit the updated CCP**, if required** to IDEM, OAQ within thirty (30) days of the update.

(c) Pursuant to 326 IAC 6.8-8, failure to submit a CCP, maintain all information required by the CCP at the source, or submit update~~s,~~ to a CCP is a violation of 326 IAC 6.8-8.

~~C.14 Monitoring Methods [326 IAC 3] [40 CFR 60] [40 CFR 63]~~

~~Any monitoring or testing required by Section D of this permit shall be performed according to the provisions of 326 IAC 3, 40 CFR 60, Appendix A, 40 CFR 60, Appendix B, 40 CFR 63, or other approved methods as specified in this permit.~~

C.~~15~~**13** Instrument Specifications [326 IAC 2-1.1-11] [326 IAC 2-7-5(3)] [326 IAC 2-7-6(1)]

(a) When required by any condition of this permit, an analog instrument used to measure a parameter related to the operation of an air pollution control device shall have a scale such that the expected maximum reading for the normal range shall be no less than twenty percent (20%) of full scale. **The analog instrument shall be capable of measuring values outside of the normal range.**

(b) ***

C.~~16~~**14** Emergency Reduction Plans [326 IAC 1-5-2] [326 IAC 1-5-3]

Pursuant to 326 IAC 1-5-2 (Emergency Reduction Plans; Submission):

(a) The Permittee ~~prepared and~~**shall maintain the most recently** submitted written emergency reduction plans (ERPs) consistent with safe operating procedures~~ on October 5, 1996 for initial approval by IDEM~~.

(b) Upon direct notification by IDEM, OAQ~~,~~ that a specific air pollution episode level is in effect, the Permittee shall immediately put into effect the actions stipulated in the ~~latest IDEM~~ approved ~~version of the~~ ERP for the appropriate episode level. [326 IAC 1-5-3]

***

C.~~18~~**16** Response to Excursions or Exceedances [40 CFR 64][326 IAC 3-8][326 IAC 2-7-5] [326 IAC 2-7-6]

~~(a)~~**(I**) Upon detecting an excursion where a response step is required by the D Section**,** or an exceedance of a limitation**, not subject to CAM,** in this permit:

~~(1~~**(a**) ***

~~(2~~**(b**) ***

~~(i~~**(1**) ***

~~(ii~~**(2**) ***

~~(iii~~**(3**) ***

~~(3~~**(c**) ***

~~(i~~**(1**) ***

~~(ii~~**(2**) ***

~~(iii~~**(3**) ***

~~(4~~**(d**) ***

~~(5~~**(e**) ***

~~(b) Compliance Assurance Monitoring (CAM)~~

~~(1~~**(II)**
(a) CAM *Response to excursions or exceedances.*
(~~i~~**1**) ***

(~~ii~~**2)** ***

(~~2~~**b**) ***

~~(3~~**(c**) Based on the results of a determination made under paragraph (~~b)(1)(ii~~**II)(a)(2**) of this condition, the EPA or IDEM, OAQ may require the Permittee to develop and implement a QIP. The Permittee shall develop and implement a QIP if notified to in writing by the EPA or IDEM, OAQ.

~~(4~~**(d**) ***

~~(5~~**(e**) ***

~~(6~~**(f)** ***

(~~i~~**1**) ***

(~~ii~~**2**) ***

~~(7~~**(g)** ***

~~(8)~~ **(h)** *CAM recordkeeping requirements.*

(~~i~~**1**) The Permittee shall maintain records of monitoring data, monitor performance data, corrective actions taken, any written quality improvement plan required pursuant to paragraph (~~b~~**II)(a**)(2) of this condition and any activities undertaken to implement a quality improvement plan, and other supporting information required to be maintained under this condition (such as data used to document the adequacy of monitoring, or records of monitoring maintenance or corrective actions). Section C - General Record Keeping Requirements of this permit contains the Permittee's obligations with regard to the records required by this condition.

(~~ii~~**(2**) ***

C.~~19~~**17** Actions Related to Noncompliance Demonstrated by a Stack Test [326 IAC 2-7-5][326 IAC 2-7-6]

***

The response action documents submitted pursuant to this condition do require a certification that meets the requirements of 326 IAC ~~326 IAC~~ 2-7-6(1) by a "responsible official" as defined by 326 IAC 2-7-1(~~34~~**35**).

Record Keeping and Reporting Requirements [326 IAC 2-7-5(3)] [326 IAC 2-7-19]

C.~~20~~**18** Emission Statement [326 IAC 2-7-5(3)(C)(iii)][326 IAC 2-7-5(7)][326 IAC 2-7-19(c)][326 IAC 2-6]

~~(a)~~ Pursuant to 326 IAC 2-6-3(a)(1), the Permittee shall submit by July 1 of each year an emission statement covering the previous calendar year. The emission statement shall contain, at a minimum, the information specified in 326 IAC 2-6-4(c) and shall meet the following requirements:

***

The emission statement does require a certification that meets the requirements of 326 IAC 2-7-6(1) by a "responsible official" as defined by 326 IAC 2-7-1(~~34~~**35**).

C.~~21~~**19** General Record Keeping Requirements [326 IAC 2-7-5(3)] [326 IAC 2-7-6] [326 IAC 2-2][326 IAC 2-3]

(a) Records of all required monitoring data, reports and support information required by this permit shall be retained for a period of at least five (5) years from the date of monitoring sample, measurement, report, or application. Support information includes~~,~~ **the following,** where applicable~~, the following:~~**:**

(~~1~~**(AA**) All calibration and maintenance records.

(~~2~~**BB**) All original strip chart recordings for continuous monitoring instrumentation.

(~~3~~**CC**) Copies of all reports required by the Part 70 permit.

Records of required monitoring information include **the following**, where applicable~~, the following~~:

(~~4~~**AA**) The date, place, as defined in this permit, and time of sampling or measurements.

(~~5~~**BB**) The dates analyses were performed.
(~~6~~**CC**) The company or entity that performed the analyses.
(~~7~~**DD**) The analytical techniques or methods used.
(~~8~~**EE**) The results of such analyses.
(~~9~~**FF**) The operating conditions as existing at the time of sampling or measurement.

***

C.~~23~~**21** General Reporting Requirements [326 IAC 2-7-5(3)(C)] [326 IAC 2-1.1-11] [326 IAC 2-2][326 IAC 2-3] **[40 CFR 64][326 IAC 3-8]**

(a) The Permittee shall submit the attached Quarterly Deviation and Compliance Monitoring Report or its equivalent. Proper notice submittal under Section B –Emergency Provisions satisfies the reporting requirements of this paragraph. Any deviation from permit requirements, the date(s) of each deviation, the cause of the deviation, and the response steps taken must be reported except that a deviation required to be reported pursuant to an applicable requirement that exists independent of this permit, shall be reported according to the schedule stated in the applicable requirement and does not need to be included in this report. This report shall be submitted not later than thirty (30) days after the end of the reporting period. The Quarterly Deviation and Compliance Monitoring Report shall include a certification that meets the requirements of 326 IAC 2-7-6(1) by a "responsible official" as defined by 326 IAC 2-7-1(~~34~~**35**). A deviation is an exceedance of a permit limitation or a failure to comply with a requirement of the permit.

***

SECTION D.1 FACILITY OPERATION CONDITIONS

~~Facility Description [326 IAC 2-7-5(14)]:~~ **Emission Unit Description:** One (1) Coal Handling Operation

~~***~~

D.1.9 Electrostatic Precipitator (ESPs) Compliance Assurance Monitoring (CAM) [40 CFR Part 64]

***

When for any one reading, that any parameter reading falls out of the range. the Permittee shall take **a** reasonable response ~~steps~~. Section C - Response to Excursions or Exceedances contains the Permittee's obligation with regard to the reasonable response steps required by this condition.Each parameter falling out of the range is not a deviation from this permit. Failure to take response steps shall be considered a deviation from this permit.

***

D.1.11 Reporting Requirements

Pursuant to the COMS Waiver issued by IDEM May 16, 1997, the Permittee shall submit quarterly reports on relative parameters which are indicative of process and control device operation for the life of the Nos. 2 Coke Battery Precarbonization facility . Section C - General Reporting contains the Permittee's obligation with regard to the reporting required by this condition. The report submitted by the Permittee does require a certification that meets the requirements of 326 IAC 2-7-6(1) by a "responsible official" as defined by 326 IAC 2-7-1(~~34~~**35**).

SECTION D.2 OPERATION CONDITIONS

~~Facility Description [326 IAC 2-7-5(14)]:~~**Emission Unit Description:** The Coke Battery Operations

***

D.2.16 Visible Emissions Notations

***

(e) If abnormal emissions are observed, the Permittee shall take **a** reasonable response. Section C - Response to Excursions or Exceedances contains the Permittee's obligation with regard to the reasonable response steps required by this condition. Failure to take response steps shall be considered a deviation of this permit.

***

D.2.17 Parametric Monitoring

(a) The Permittee shall record the pressure drop across the baghouse CP3041 used in conjunction with No. 5 and No. 7 coke oven batteries pushing operations at least once per day when pushing is occurring. When for any one reading, the pressure drop across each baghouse is outside the normal range, the Permittee shall take **a** reasonable response. The normal range for this unit is a pressure drop between 3.0 and 15.0 inches of water unless a different upper-bound or lower-bound value for this range is determined during the latest stack test. Section C - Response to Excursions or Exceedances contains the Permittee's obligation with regard to the reasonable response steps required by this condition. A pressure reading that is outside the above mentioned range is not a deviation from this permit. Failure to take response steps shall be considered a deviation of this permit.

***

SECTION D.3 FACILITY OPERATION CONDITIONS

~~Facility Description [326 IAC 2-7-5(14)]:~~ **Emission Unit Description:** One (1) Coke Plant By-Product Recovery Plant

***

SECTION D.4 FACILITY OPERATION CONDITIONS

~~Facility Description [326 IAC 2-7-5(14)]:~~ **Emission Unit Description:** One (1) coke oven gas (COG) desulfurization facility

***

D.4.4 Reporting Requirements

A quarterly summery report to document compliance with Condition D.4.2 shall be submitted not later than thirty (30) days after the end of the quarter being reported. Section C - Sulfur Dioxide SO_2 Reporting Requirements (Entire Source) contains the Permittee's obligation with regard to the reporting required by this condition. The report submitted by the Permittee does require a certification that meets the requirements of 326 IAC 2-7-6(1) by a "responsible official" as defined by 326 IAC 2-7-1(~~34~~**35**).

SECTION D.5 FACILITY OPERATION CONDITIONS

~~Facility Description [326 IAC 2-7-5(14)]:~~ **Emission Unit Description:** One (1) No. 2 Coke Plant Boiler House

***

D.5.10 Reporting Requirements

***

(c) The report submitted by the Permittee does require a certification that meets the requirements of 326 IAC 2-7-6(1) by a "responsible official" as defined by 326 IAC 2-7-1(~~34~~**35**). Section C - General Reporting contains the Permittee's obligation with regard to the reporting required by this condition.

~~D.5.11 Natural Gas Fired Boiler Certification~~

~~A semi-annual certification shall be submitted for the Number 2 Coke Plant Boiler House Boilers Nos. 3, through 10. Section C - General Reporting contains the Permittee's obligation with regard to the reporting required by this condition. The report submitted by the Permittee does require a certification that meets the requirements of 326 IAC 2-7-6(1) by a "responsible official" as defined by 326 IAC 2-7-1(34).~~

SECTION D.6 FACILITY OPERATION CONDITIONS

~~Facility Description [326 IAC 2-7-5(14):~~ **Emission Unit Description:** One (1) Number 3 Sinter Plant

***

D.6.7 Visible Emissions Notations

***

(e) If abnormal emissions are observed, the Permittee shall take **a** reasonable response. Section C - Response to Excursions or Exceedances contains the Permittee's obligation with regard to the reasonable response steps required by this condition. Failure to take response steps shall be considered a deviation of this permit.

***

D.6.8 Parametric Monitoring

(a) The Permittee shall record the pressure drop and liquid reagent flow rate of the dry venturi scrubbers used in conjunction with the No. 3 Sinter Plant Sinter Strand Windbox Gas Cleaning Systems at least once per day when the No. 3 Sinter Plant Sinter Strand Windbox units are in operation. When for any one reading, the pressure drop **or flow rate** across the scrubbers is outside the **normal** range ~~of 3 to 8 inches of water and the flow rate of the scrubber is outside the range of 400 to 600 gallons per minute (gpm) or a range established during the latest stack test~~, the Permittee shall take **a** reasonable response. **The normal range for this unit is a range of 3 to 8 inches of water and the normal flow rate of the scrubber is 400 to 600 gallons per minute (gpm) unless a different upper-bound or lower-bound value for these ranges is determined during the latest stack test.** Section C - Response to Excursions or Exceedances contains the Permittee's obligation with regard to the reasonable response steps required by this condition. A pressure drop or flow rate that is outside the above mentioned ranges is not a deviation from this permit. Failure to take response steps shall be considered a deviation of this permit.

(b) The Permittee shall record the pressure drop of the baghouse used in conjunction with the No. 3 Sinter Plant Discharge Ends Area at least once per day when the No. 3 Sinter Plant Discharge Ends Area is in operation. When for any one reading, the pressure drop across the baghouse is outside the range, the Permittee shall take **a** reasonable response ~~steps~~. The normal range for this unit is a pressure drop between 3 and 8 inches of water unless a different upper-bound or lower-bound value for this range is determined during the latest stack test. Section C - Response to Excursions or Exceedances contains the Permittee's obligation with regard to the reasonable response steps required by this condition. A pressure reading that is outside the above mentioned range is not a deviation from this permit. Failure to take response shall be considered a deviation of this permit.

(c) The Permittee shall record the pressure drop of the baghouse used in conjunction with the No. 3 Sinter Plant Cold Screen Station at least once per day when the No. 3 Sinter Plant Cold Screen Station is in operation. When for any one reading, the pressure drop across the baghouse is outside the range the Permittee shall take **a** reasonable response ~~steps~~. The normal range for this unit is a pressure drop between 3 and 8 inches of water unless a different upper-bound or lower-bound value for this range is determined during the latest stack test. Section C - Response to Excursions or Exceedances contains the Permittee's obligation with regard to the reasonable response steps required by this condition. A pressure reading that is outside the above mentioned range is not a deviation from this permit. Failure to take response steps shall be considered a deviation of this permit.

(d) ***

D.6.12 ~~General~~ Record Keeping Requirements

***

D.6.13 ~~General~~ Reporting Requirements

***

(d) The reports submitted by the Permittee do require a certification that meets the requirements of 326 IAC 2-7-6(1) by a "responsible official" as defined by 326 IAC 2-7-1(~~34~~**35**).

Section D.7 Facility Operation Conditions

~~Facility Description [326 IAC 2-7-5(14)]:~~ **Emission Unit Description:** Four (4) Blast Furnaces, designated as Blast Furnace No. 4, Blast Furnace No. 6, Blast Furnace No. 8 and Blast Furnace No. 14

***

D.7.13 Visible Emissions Notations

***

(e) If abnormal emissions are observed, the Permittee shall take **a** reasonable response. Section C - Response to Excursions or Exceedances contains the Permittee's obligation with regard to the reasonable response steps required by this condition. Failure to take response steps shall be considered a deviation of this permit.

***

D.7.14 Parametric Monitoring

(a) The Permittee shall record the pressure drop across the No. 14 Blast Furnace Cast house baghouse ID3185, at least once per day when the No. 14 Blast Furnace Casthouse is in operation. When for any one reading, the pressure drop across the baghouses is

outside the normal range, the Permittee shall take **a** reasonable response ~~steps~~. The normal range for this unit is a pressure drop between 3 and 9 inches of water unless a different upper-bound or lower-bound value for this range is determined during the latest stack test. Section C - Response to Excursions and Exceedances contains the Permittee's obligation with regard to the reasonable response steps required by this condition. A pressure reading that is outside the above mentioned range is not a deviation from this permit. Failure to take response steps shall be considered a deviation of this permit.

(b) The Permittee shall record the pressure drop across the Blast Furnace No. 14 Stockhouse Baghouse, at least once per day when the No. 14 Blast Furnace Stockhouse processes are in operation. When for any one reading, the pressure drop across the baghouses is outside the normal range, the Permittee shall take **a** reasonable response ~~steps~~. The normal range for this unit is a pressure drop between 3 and 9 inches of water unless a different upper-bound or lower-bound value for this range is determined during the latest stack test. Section C - Response to Excursions and Exceedances contains the Permittee's obligation with regard to the reasonable response steps required by this condition. A pressure reading that is outside the above mentioned range is not a deviation from this permit. Failure to take response steps shall be considered a deviation of this permit.

***

D.7.15 ~~General~~ Record Keeping Requirements

***

D.7.16 ~~General~~ Reporting Requirements

A quarterly summary report to document the compliance status with condition D.7.1 and D.7.7 shall be submitted not later than thirty (30) days after the end of the quarter being reported. Section C - General Reporting contains the Permittee's obligation with regard to the reporting required by this condition. The report submitted by the Permittee does require a certification that meets the requirements of 326 IAC 2-7-6(1) by a "responsible official" as defined by 326 IAC 2-7-1(~~34~~**35**).

SECTION D.8 FACILITY OPERATION CONDITIONS

~~Facility Description [326 IAC 2-7-5(14)]:~~ **Emission Unit Description:** Number 1 BOP Shop

***

~~D.8.3 Lake County Opacity Limitations [326 IAC 6.8-3-4]~~

~~Pursuant to 326 IAC 6.8-3-4, the visible emissions from the Number 1 Basic Oxygen Furnace operations shall comply with the following:~~

~~(a) Opacity from the Hot Metal Transfer and Desulfurization Stations baghouse stack discharge shall not exceed five percent (5%) opacity, for any three (3) minute average.~~

~~(b) Opacity from the No. 1 BOP Shop Roof Monitor SS6636 Operations shall not exceed twenty percent (20%) for any three (3) minute average.~~

~~(c) Opacity from the BOP Furnace Operations Gas Cleaning System Stacks SS6102 and SS6103 shall not exceed twenty percent (20%), for any six (6) minute average.~~

D.8.~~4~~**3** Sulfur Dioxide (SO_2) Limitations [326 IAC 7-4.1-20(c)(3)]

***

D.8.~~7~~**6** Sulfur Dioxide Testing Requirements

(a) Pursuant to the U.S. EPA Administrative Consent Order, issued January 2, 2004, within 2.5 years from the date of the most recent valid compliance test, the Permittee shall perform SO_2 emission testing on the No. 1 and No. 2 Hot Metal Desulfurization station baghouse discharge utilizing the test method 40 CFR 60, Appendix A Method 6C or other methods as submitted in accordance with the U.S. EPA Administrative Consent Order, issued January 2, 2004, for the purpose of determining compliance with condition D.8.~~5~~**4**(a). This test shall be repeated at least once every 2.5 years from the date of the most recent valid compliance demonstration.

(b) Pursuant to the U.S. EPA Administrative Consent Order, issued January 2, 2004, within 2.5 years from the date of the most recent valid compliance test, the Permittee shall perform SO_2 emission testing on the No. 1 and No. 2 Hot Metal Desulfurization Station Baghouse discharge utilizing the test method 40 CFR 60, Appendix A Method 6C or other methods as submitted in accordance with the U.S. EPA Administrative Consent Order, issued January 2, 2004, for the purpose of determining compliance with condition D.8.~~5~~**4**(b) during the desulfurization reagent injection only. This test shall be repeated at least once every two and one-half (2 ½) years from the date of the most recent valid compliance demonstration.

(c) Pursuant to the U.S. EPA Administrative Consent Order, issued January 2, 2004 demonstration of compliance by performance testing per D.8.~~8~~**6** (b) above shall not fulfill the compliance demonstration requirement for D.8.~~8~~**6**(a).

***

D.8.~~9~~**8** Visible Emissions Notations

***

(e) If abnormal emissions are observed, the Permittee shall take **a** reasonable response. Section C - Response to Excursions or Exceedances contains the Permittee's obligation with regard to the reasonable response steps required by this condition. Failure to take response steps shall be considered a deviation from this permit.

***

D.8.~~10~~**9** Parametric Monitoring

(a) The Permittee shall record the pressure drop across the CASBell/OB Lancing Stations baghouse SS3105 used in conjunction with the CASBell/OB Lancing Stations, at least once per day when the CASBell/OB Lancing Stations are in operation. When for any one reading, the pressure drop across the baghouse is outside the normal, the Permittee shall take **a** reasonable response ~~steps~~. The normal range for this unit is a pressure drop between 2 and 10 inches of water unless a different upper-bound or lower-bound value for this range is determined during the latest stack test Section C - Response to Excursions or Exceedances contains the Permittee's obligation with regard to the reasonable response steps required by this condition. A pressure reading that is outside the above mentioned range is not a deviation from this permit. Failure to take response steps shall be considered a deviation of this permit.

(b) The Permittee shall record the pressure drop and flow rate of the scrubbers used in conjunction with the three (3) BOP vessels M, E, and D, at least once per day when the three (3) BOP vessels M, E, and D units are in operation. When for any one reading, the pressure drop **or flow rate** across the scrubbers is outside the normal range ~~of 50 and 90 inches of water or the flow rate of the scrubbers is outside the range of 2500 and 4500 gallons per minute (gpm) or ranges established during the latest stack test~~, the Permittee shall take **a** reasonable response. **The normal range for this unit is a range of 50 and 90 inches of water and the normal flow rate of the scrubber is 2500 to 4500 gallons per minute (gpm) unless a different upper-bound or lower-bound value for these**

ranges is determined during the latest stack test. Section C - Response to Excursions or Exceedances contains the Permittee's obligation with regard to the reasonable response steps required by this condition. A reading that is outside the above mentioned ranges for respective parameters is not a deviation from this permit. Failure to take response steps shall be considered a deviation of this permit.

(c) The Permittee shall record the pressure drop across the Hot Metal Transfer and Desulfurization Baghouse SS3100 used in conjunction with the No. 1 BOP Hot Metal Desulfurization stations, at least once per day when the No. 1 BOP Hot Metal Desulfurization Stations are in operation. When for any one reading, the pressure drop across the baghouse is outside the normal range, the Permittee shall take **a** reasonable response ~~steps~~. The normal range for this unit is a pressure drop between 2 and 10 inches of water unless a different upper-bound or lower-bound value for this range is determined during the latest stack test Section C - Response to Excursions or Exceedances contains the Permittee's obligation with regard to the reasonable response steps required by this condition. A pressure reading that is outside the above mentioned range is not a deviation from this permit. Failure to take response steps shall be considered a deviation of this permit.

***

D.8.~~12~~**11** ~~General~~ Record Keeping Requirements

(a) Pursuant to the U.S. EPA Administrative Consent Order, issued January 2, 2004, and in order to document the compliance status with Condition D.8.~~5~~**4**, the Permittee shall keep records of the monthly hot metal throughput for the No. 1 and No. 2 Hot Metal Transfer and Desulfurization Stations.

(b) To document the compliance status with Visible Emission Notations, Condition D.8.~~9~~**8**, the Permittee shall maintain records of once per day visible emission notations of the Hot Metal Desulfurization Baghouse Stack SS6101, the BOP Gas Cleaning System Stacks SS6102 and SS6103 and the CASBell/OB Lancing Station Baghouse Stacks SS6104 exhausts. The Permittee shall include in its daily record when a visible emission notation is not taken and the reason for the lack of visible emission notation (e.g. the process did not operate that day).

(c) To document the compliance status with Condition D.8.~~10~~**9**, the Permittee shall maintain records of the parametric monitoring CASBell/OB Lancing Station Baghouse SS3105 and Hot Metal Transfer and Desulfurization Baghouse SS3100 total static pressure drop, and No. 1 BOP Shop Gas Cleaning System scrubbers, pressure drop across the venturi throats and scrubber supply water flow rate once per day during normal operation. The Permittee shall include in its daily record when a pressure drop reading and/or flow rate reading is not taken and the reason for the lack of pressure drop reading and/or flow rate reading (e.g. the process did not operate that day).

***

~~Facility Description [326 IAC 2-7-5(14)]:~~ **Emission Unit Description:** Number 2 Q-BOP Shop

***

(f) One (1) Capped Argon Bubble (CAB) Station, approved in 2014 for construction, identified as NSC40296, with a maximum capacity of 477,000 tons per year, using the No. 3 LMF Hot Fume and Material Handling Baghouse NS3137 as control, and exhausting to stack NS6148. All uncontrolled emissions exhaust through the roof monitor NS6634.

***

D.9.1 PSD Minor Limit [326 IAC 2-2]

In order to render the requirements of 326 IAC 2-2 (PSD) not applicable, the Permittee shall comply with the following:

(a) The PM emission rate from the Capped Argon Bubbling (CAB) Station, identified as NSC40296, controlled by the No. 3 LMF Hot Fume and Material Handling Baghouse NS3137, shall not exceed 2.7 pounds per hour.

(b) The PM_{10} emission rate from the Capped Argon Bubbling (CAB) Station, identified as NSC40296, controlled by the No. 3 LMF Hot Fume and Material Handling Baghouse NS3137, shall not exceed 2.7 pounds per hour.

(c) The $PM_{2.5}$ emission rate from the Capped Argon Bubbling (CAB) Station, identified as NSC40296, controlled by the No. 3 LMF Hot Fume and Material Handling Baghouse NS3137, shall not exceed 2.0 pounds per hour.

Compliance with these emission limits will ensure that the potential to emit from this modification is less than twenty-five (25) tons of PM per year, less than fifteen (15) tons of PM_{10} per year, and less than ten (10) tons of $PM_{2.5}$ per year and therefore will render the requirements of 326 IAC 2-2 not applicable.

D.9.~~1~~**2** Lake County PM_{10} Emission Requirements [326 IAC 6.8-2-38]

***

~~D.9.3 Lake County Opacity Limitations [326 IAC 6.8-3-4]~~

~~Pursuant to 326 IAC 6.8-3-4 the visible emissions from the Number 2 Q-BOP Shop operations shall be limited as follows:~~

~~(a) Opacity from the Number 2 Q-BOP Hot Metal Transfer and Desulfurization Stations Baghouse stack NS6144 shall not exceed five percent (5%) for any three (3) minute average.~~

~~(b) Opacity from the Number 2 Q-BOP Gas Cleaning system stacks NS6124 and NS6125 shall not exceed twenty percent (20%) for any six (6) minute average.~~

~~(c) Opacity from the Number 2 Q-BOP Roof Monitor NS 6632 shall not exceed twenty percent (20%) for any three (3) minute average.~~

~~(d) Opacity from the Number 2 Q-BOP North and South Flux Handling System Baghouse stacks NS6626 and NS6625, (previously known as the flux handling line baghouse shall not exceed five percent (5%) for any three (3) minute average.~~

~~(e) Opacity from the Number 2 Q-BOP Secondary Baghouse stack NS6123 shall not exceed five percent (5%) for any three (3) minute average.~~

~~(f) Opacity from the Number 2 Q-BOP LMF No. 1 Hot Fume Exhaust Baghouse stack NS6146 shall not exceed five percent (5%) for any three (3) minute average.~~

~~(g) Opacity from the Number 2 Q-BOP LMF No. 2 Hot Fume Exhaust Baghouse stack NS6147 shall not exceed five percent (5%) for any, three (3) minute average.~~

***

D.9.7 Particulate Testing Requirements [326 IAC 2-7-6(1),(6)][326 IAC 2-1.1-11]

(a) Within 2.5 years from the date of the most recent compliance demonstration, the Permittee shall perform PM_{10} testing on the Number 2 Q-BOP Hot Metal Transfer and Desulfurization Stations Baghouse discharge for the purpose of determining compliance with Condition D.9.~~1~~**2**(a), utilizing methods approved by the Commissioner. This test shall be repeated at least once every 2.5 years from the date of the most recent valid compliance demonstration.

(b) Within 2.5 years from the date of the most recent compliance demonstration, the Permittee shall perform PM_{10} testing on the Number 2 Q-BOP Gas Cleaning System stacks NS6124 and NS6125 for the purpose of determining compliance with Condition D.9.~~1~~**2** (c), utilizing methods approved by the Commissioner. This test shall be repeated at least once every 2.5 years from the date of the most recent valid compliance demonstration.

(c) Within 2.5 years from the date of the most recent compliance demonstration, the Permittee shall perform PM_{10} testing on the Number 2 Q-BOP Secondary Emissions Baghouse Stack NS6123 for the purpose of determining compliance with Condition D.9.~~1~~**2** (b), utilizing methods approved by the Commissioner. This test shall be repeated at least once every 2.5 years from the date of the most recent valid compliance demonstration.

(d) Not later than 180 days after the startup of the Capped Argon Bubbling (CAB) Station, identified as NSC40296, the Permittee shall perform PM, PM10, and PM2.5 testing of the LMF 3 Hot Fume and Material Handling Baghouse NS3137 utilizing methods approved by the commissioner at least once every 5.0 years from the date of the most recent valid compliance demonstration. PM10 and PM2.5 includes filterable and condensable PM.

(~~d~~**e**) ***

D.9.10 Particulate Control

In order to ensure compliance with Condition D.9.1, the No. 3 LMF Hot Fume and Material Handling Baghouse NS3137 for PM, PM10, and PM2.5 control shall be in operation and control emissions from the Capped Argon Bubbling (CAB) Station, identified as NSC40296, at all times the Capped Argon Bubbling (CAB) Station is in operation.

In the event that bag failure is observed in a multi-compartment baghouse, if operations will continue for ten (10) days or more after the failure is observed before the failed units will be repaired or replaced, the Permittee shall promptly notify the IDEM, OAQ of the expected date the failed units will be repaired or replaced. The notification shall also include the status of the applicable compliance monitoring parameters with respect to normal, and the results of any response actions taken up to the time of notification.

D.9.~~10~~**11** Carbon Monoxide (CO) Control

***

D.9.~~11~~**12** Visible Emissions Notations

(a) Visible emission notations of the Desulfurization Stations baghouse stack NS6144, Secondary Baghouse stack NS6123**,** ~~and~~ No. 2 Q-BOP Gas Cleaning System Stacks NS6124 and NS6125, **and the LMF 3 Hot Fume and Material Handling Baghouse stack NS6148,** shall be performed once per day during normal daylight operations. A trained employee shall record whether emissions are normal or abnormal.

***

(e) If abnormal emissions are observed, the Permittee shall take **a** reasonable response. Section C - Response to Excursions or Exceedances contains the Permittee's obligation with regard to the reasonable response steps required by this condition. Failure to take response steps shall be considered a deviation of this permit.

***

D.9.~~12~~**13** Parametric Monitoring

(a) The Permittee shall record the pressure drop across the No. 2 QBOP Secondary Emissions baghouse NS3124 used in conjunction with the secondary emissions from the three (3) Q-BOP vessels T, W, and Y, at least once per day, when any of the three (3) Q-BOP vessels T, W, and Y, is in operation. When for any one reading, the pressure drop across the baghouse is outside the normal range, the Permittee shall take **a** reasonable response ~~steps~~. The normal range for this unit is a pressure drop between 2 and 10 inches of water unless a different upper-bound or lower-bound value for this range is determined during the latest stack test. Section C - Response to Excursions or Exceedances contains the Permittee's obligation with regard to the reasonable response steps required by this condition. A pressure reading that is outside the above mentioned range is not a deviation from this permit. Failure to take response steps shall be considered a deviation of this permit.

(b) The Permittee shall record the pressure drop across the venture~~e~~**i** scrubber throats and scrubber total supply water flow rate of the No. 2 Q-BOP gas cleaning Systems scrubbers NS3125 and NS3126 used in conjunction with the 3 No. 2 Q-BOP vessels at least once per day when either the three (3) Q-BOP vessels T, W, and Y units is operating. For each scrubber system, when for any one reading across the venture~~e~~**i** scrubber throats is outside the normal range ~~of 50 to 70 inches of water or the scrubber supply water flow rate is outside the normal range of 2,000 and 4,500 gallons per minute (gpm) or ranges established during the latest stack test~~, the Permittee shall take **a** reasonable response. **The normal range for this unit is a pressure drop between 50 and 70 inches of water and the normal flow rate of the scrubber is 2,000 to 4,500 gallons per minute (gpm) unless a different upper-bound or lower-bound value for this range is determined during the latest stack test.** Section C - Response to Excursions or Exceedances contains the Permittee's obligation with regard to the reasonable response steps required by this condition. A reading that is outside the above mentioned ranges for respective parameters is not a deviation from this permit. Failure to take response steps shall be considered a deviation of this permit.

(c) The Permittee shall record the pressure drop across the Hot Metal Desulfurization baghouse NS3115 used in conjunction with the No, 2 Q-BOP Hot Metal Desulfurization stations and mixers, at least once per day when the desulfurization stations and mixers are in operation. When for any one reading, the pressure drop across the baghouse is outside the normal range, the Permittee shall take **a** reasonable response ~~steps~~. The normal range for this unit is a pressure drop between 2 and 10 inches of water unless a different upper-bound or lower-bound value for this range is determined during the latest stack test. Section C - Response to Excursions or Exceedances contains the Permittee's obligation with regard to the reasonable response steps required by this condition. A pressure reading that is outside the above mentioned range is not a deviation from this permit. Failure to take response steps shall be considered a deviation of this permit.

***

D.9.~~14~~**15** ~~General~~ Record Keeping Requirements

(a) ***

(b) To document the compliance status with Condition D.9.~~11~~**12** the Permittee shall maintain the records of once per day visible emission notations of the Hot Metal Transfer and Desulfurization Stations baghouse discharge NS6144, No. 2 QBOP Secondary Emissions Baghouse Stack NS6123, ~~and~~ No. 2 Q-BOP Gas Cleaning System Stacks NS6124 and NS6125**, and the LMF 3 Hot Fume and Material Handling Baghouse stack NS6148** exhausts. The Permittee shall include in its daily record when a visible emission notation is not taken and the reason for the lack of visible emission notation (e.g. the process did not operate that day).

(c) To document the compliance status with Condition D.9.~~12~~**13**, the Permittee shall maintain records of the once per day of the pressure drop of the No. 2 QBOP secondary emissions baghouse NS3124, pressure drop across the venturi scrubber throats and supply water flow rate of the No. 2 QBOP Gas cleaning systems scrubbers NS3125 and NS3126, and pressure drop of the Hot Metal Transfer and Desulfurization baghouse NS3115, during normal operation. The Permittee shall include in its daily record when a pressure drop reading and/or flow rate reading is not taken and the reason for the lack of pressure drop reading and/or flow rate reading (e.g. the process did not operate that day).

***

SECTION D.10 FACILITY OPERATION CONDITIONS

~~Facility Description [326 IAC 2-7-5(14)]:~~ **Emission Unit Description:** One (1) 84- Inch Hot Strip Mill

***

D.10.7 Reporting Requirements

A quarterly summary report to document the compliance status with condition D.10.2 shall be submitted not later than thirty (30) days after the end of the quarter being reported. Section C – Sulfur Dioxide SO_2 Reporting Requirements (Entire Source) contains the Permittee's obligation with regard to the reporting required by this condition. The report submitted by the Permittee does require a certification that meets the requirements of 326 IAC 2-7-6(1) by a "responsible official" as defined by 326 IAC 2-7-1(~~34~~**35**).

SECTION D.11 FACILITY OPERATION CONDITIONS

~~Facility Description [326 IAC 2-7-5(14)]:~~ **Emission Unit Description:** Two Continuous Pickle Lines

***

SECTION D.12 FACILITY OPERATION CONDITIONS

~~Facility Description [326 IAC 2-7-5(14)]:~~ **Emission Unit Description:** Sheet Products Operations

***

D.12.6 Reporting Requirements

***

(c) The reports submitted by the Permittee do require a certification that meets the requirements of 326 IAC 2-7-6(1) by a "responsible official" as defined by 326 IAC 2-7-1(~~34~~**35**).

SECTION D.13 FACILITY OPERATION CONDITIONS

~~Facility Description [326 IAC 2-7-5(14)]:~~ **Emission Unit Description:** Tin Products Operations

***

SECTION D.14 FACILITY OPERATION CONDITIONS

~~Facility Description [326 IAC 2-7-5(14)]:~~ **Emission Unit Description:** Boiler House No. 4

***

D.14.5 Visible Emission Notations

When Boilers No. 1 and/or No. 2 combust fuel oil or any combination of fuel oil and natural gas or blast furnace gas:

***

(e) If abnormal emissions are observed, the Permittee shall take **a** reasonable response. Section C - Response to Excursions or Exceedances contains the Permittee's obligation with regard to the reasonable response steps required by this condition. Failure to take response steps shall be considered a deviation of this permit.

***

D.14.7 Reporting Requirements

A quarterly summary report to document the compliance status with conditions D.14.2 shall be submitted in accordance with Section C – Sulfur Dioxide Reporting Requirements (Entire Source) of this permit. Section C - General Reporting contains the Permittee's obligation with regard to the reporting required by this condition. This report does require a certification that meets the requirements of 326 IAC 2-7-6(1) by a "responsible official" as defined by 326 IAC 2-7-1(~~34~~**35**).

~~D.14.8 Natural Gas Fired Boiler Certification~~

~~A semi-annual certification shall be submitted for the Number 4 Boiler House Boilers Nos. 1, 2 and 3, five hundred (500) million British Thermal unit per hour (MMBtu/hr) natural gas fired boilers. Section C - General Reporting Requirements contains the Permittee's obligation with regard to the reporting required by this condition. This report does require a certification that meets the requirements of 326 IAC 2-7-6(1) by a "responsible official" as defined by 326 IAC 2-7-1(34).~~

SECTION D.15 FACILITY OPERATION CONDITIONS

~~Facility Description [326 IAC 2-7-5(14)]:~~ **Emission Unit Description:** TurboBlower Boiler House (TBBH)

***

D.15.7 Visible Emission Notations

When any one or combination of Boilers No. 1, No. 2, No. 3 and No. 5 combust fuel oil or any combination of fuel oil, and natural gas, blast furnace gas or coke oven gas:

***

(e) If abnormal emissions are observed, the Permittee shall take **a** reasonable response. Section C - Response to Excursions or Exceedances contains the Permittee's obligation with regard to the reasonable response steps required by this condition. Failure to take response steps shall be considered a deviation of this permit.

***

D.15.9 Reporting Requirements

***

(d) These reports do require a certification that meets the requirements of 326 IAC 2-7-6(1) by a "responsible official" as defined by 326 IAC 2-7-1(~~34~~**35**).

~~D.15.10 Natural Gas Fired Boiler Certification~~

~~A semi-annual certification shall be submitted for each of the TBBH Boilers Nos. 1, 2 and 3, with heat input of four hundred (400) million British Thermal unit per hour (MMBtu/hr), No. 5, with a heat input of four hundred fifty (450) MMBtu/hr and No. 6 with heat input of five hundred (500) million British Thermal unit per hour (MMBtu/hr) natural gas fired boilers. Section C – General reporting Requirements contains the Permittee's obligation with regard to the reporting required by this condition. This report does require a certification that meets the requirements of 326 IAC 2-7-6(1) by a "responsible official" as defined by 326 IAC 2-7-1(34).~~

SECTION D.16 FACILITY OPERATION CONDITIONS

~~Facility Description [326 IAC 2-7-5(14)]:~~**Emission Unit Description:**

***

Section D.17 FACILITY OPERATION CONDITIONS

~~Facility Description [326 IAC 2-7-5(14)]:~~ **Emission Unit Description:** Insignificant activities as follows:

***

Section D.18 FACILITY OPERATION CONDITIONS

~~Facility Description [326 IAC 2-7-5(14)]:~~ **Emission Unit Description:** CASP FERs and PFRs
Note: Complete Descriptions are shown in Section A.2.

~~***~~

D.18.9 Scrubber Monitoring [40 CFR Part 64]

(a) ***

(b) When for any one reading, the pH of the scrubbing liquid is **below the minum** ~~less than 5.0, or a minimum established during the latest stack test~~, the Permittee shall take **a** reasonable response. **The minum for this unit is 5.0 unless a different minumum is determined during the latest stack test.** Section C - Response to Excursions or Exceedances contains the Permittee's obligation with regard to the reasonable response steps required by this condition. A pH reading that is less than ~~5.0~~ **the minimum** is not a deviation from this permit. Failure to take response steps shall be considered a deviation from this permit.

(c) When for any one reading, the exhaust air stream pressure drop is outside the normal range ~~of 1.0 and 6.0 inches of water, or a range established during the latest stack test~~, the Permittee shall take **a** reasonable response. **The normal range for this unit is between 1.0 and 6.0 inches of water unless a different upper-bound or lower-bound value for this range is determined during the latest stack test.** Section C - Response to Excursions or Exceedances contains the Permittee's obligation with regard to the reasonable response steps required by this condition. An exhaust air stream pressure drop that is outside the range is not a deviation from this permit. Failure to take response steps shall be considered a deviation from this permit.

(d) When for any one reading, the pump discharge pressure is outside **the normal range, the Permittee shall take a reasonable response. The normal range for this unit is** a range of 55 and 70 pounds per square inch of water (psi) **unless a different upper-bound or lower-bound value for this range is**~~, or a range established~~ during the latest stack test~~, the Permittee shall take reasonable response~~. Section C - Response to Excursions or Exceedances contains the Permittee's obligation with regard to the reasonable response steps required by this condition. A pump discharge pressure that is outside a range of 55 and 70 psi, or a range established during the latest stack test, is not a deviation from this permit. Failure to take response steps shall be considered a deviation from this permit.

(e) ***

D.18.10 Visible Emissions Notations [40 CFR Part 64]

***

(e) If abnormal missions are observed, the Permittee shall take **a** reasonable response. Section C- Response to Excursions or Exceedances contains the Permittee's obligation with regard to the reasonable response steps required by this condition. An abnormal reading is not a deviation from this permit. Failure to take response steps shall be considered a deviation from this permit.

D.18.11 Parametric Monitoring Notations [40 CFR Part 64]

The Permittee shall record the pressure drop across each baghouse and cyclone listed in this section, at least once per day when the associated facility/emissions unit is in operation. When for any one reading, the pressure drop across a baghouse is outside the normal range, the Permittee shall take **a** reasonable response ~~steps~~. The normal range for this unit is a pressure drop between 0.5 and 6.0 inches of water unless a different upper-bound or lower-bound value for this range is determined during the latest stack test. Section C - Response to Excursions or Exceedances contains the Permittee's obligation with regard to the reasonable response steps required by this condition. A pressure reading that is outside the above mentioned range is not a deviation from this permit. Failure to take response steps shall be considered a deviation from this permit.

***

Section D.19 FACILITY OPERATION CONDITIONS

~~Facility Description [326 IAC 2-7-5(14)]:~~ **Emission Unit Description:** CASP Raw Material Receiving, Handling and Preparation Note: Complete Descriptions are shown in Section A.2.

***

D.19.5 Visible Emissions Notations

***

(e) If abnormal missions are observed, the Permittee shall take **a** reasonable response. Section C- Response to Excursions or Exceedances contains the Permittee's obligation with regard to the reasonable response steps required by this condition. An abnormal reading is not a deviation from this permit. Failure to take response steps shall be considered a deviation from this permit.

D.19.6 Parametric Monitoring Notations

The Permittee shall record the pressure drop across each baghouse listed in this section, at least once per day when the associated facility/emissions unit is in operation. When for any one reading, the pressure drop across a baghouse is outside the normal range, the Permittee shall take **a** reasonable response ~~steps~~. The normal range for this unit is a pressure drop between 1.0 and 6.0 inches of water unless a different upper-bound or lower-bound value for this range is determined during the latest stack test Section C - Response to Excursions or Exceedances contains the Permittee's obligation with regard to the reasonable response steps required by this condition. A pressure reading that is outside the above mentioned range is not a deviation from this permit. Failure to take response steps, shall be considered a deviation from this permit.

***

Section D.20 FACILITY OPERATION CONDITIONS

~~Facility Description [326 IAC 2-7-5(14)]:~~ **Emission Unit Description:** CASP Billet and Product Handling
***

D.20.6 Reporting Requirements

***

(c) These reports shall be submitted not later than thirty (30) calendar days following the end of each calendar quarter. Section C – General Reporting Requirements contains the Permittee's obligation with regard to the reporting required by this condition. The reports submitted by the Permittee do require a certification that meets the requirements of 326 IAC 2-7-6(1) by a "responsible official" as defined by 326 IAC 2-7-1(~~34~~**35**).

Section D.21 FACILITY OPERATION CONDITIONS

~~Facility Description [326 IAC 2-7-5(14)]:~~ **Emission Unit Description:** CASP Emergency Generators, Fire Pumps and Tanks Note: Complete Descriptions are shown in Section A.2 and Section A.3.

***

SECTION D.22 FACILITY OPERATION CONDITIONS

~~Facility Description [326 IAC 2-7-5(14)]:~~ **Emission Unit Description:** East PCI Coal Pulverization

***

D.22.6 Visible Emissions Notations

***

(e) If abnormal emissions are observed, the Permittee shall take **a** reasonable response. Section C - Response to Excursions or Exceedances contains the Permittee's obligation with regard to the reasonable response steps required by this condition. Failure to take response steps shall be considered a deviation from this permit.

D.22.7 Parametric Monitoring

The Permittee shall record the pressure drop across the baghouses used in conjunction with each pulverization equipment train, at least once per day when each pulverization equipment train is in operation. When for any one reading, the pressure drop across the baghouse is outside the normal range, the Permittee shall take **a** reasonable response ~~steps~~. The normal range for this unit is a pressure drop between 1.0 and 8.0 inches of water unless a different upper-bound or lower-bound value for this range is determined during the latest stack test
Section C - Response to Excursions or Exceedances contains the Permittee's obligation with regard to the reasonable response steps required by this condition. A pressure reading that is outside the above mentioned range is not a deviation from this permit. Failure to take response steps shall be considered a deviation of this permit.

***

D.22.9 Reporting Requirements

A quarterly summary of the information to document the compliance status with conditions D.22.1 shall be submitted not later than thirty (30) days after the end of the quarter being reported. Section C - General Reporting contains the Permittee's obligation with regard to the reporting required by this condition. The report submitted by the Permittee does require a certification that meets the requirements of 326 IAC 2-7-6(1) by a responsible official **as defined by 326 IAC 2-7-1 (35)**.

SECTION D.23 Facility Operation Conditions

~~Facility Description [326 IAC 2-7-5(14)]:~~ **Emissions Unit Description:** West PCI Coal Pulverization

***

SECTION D.24 FACILITY OPERATION CONDITIONS

~~Facility Description [326 IAC 2-7-5(14)]:~~ **Emissions Unit Description:** PCI Coal Handling Thaw Shed

***

D.24.4 Reporting Requirements

A quarterly summary of the information to document the compliance status with condition D.24.1 shall be not later than thirty (30) days after the end of the quarter being reported. Section C - General Reporting contains the Permittee's obligation with regard to the reporting required by this condition. The report submitted by the Permittee does require a certification that meets the requirements of 326 IAC 2-7-6(1) by a responsible official **as defined by 326 IAC 2-7-1(35)**.

SECTION D.25 FACILITY OPERATION CONDITIONS

~~Facility Description [326 IAC 2-7-5(14)]:~~ **Emissions Unit Description:** PCI Coal Handling Operations

***

SECTION D.26 FACILITY OPERATION CONDITIONS

~~Facility Description [326 IAC 2-7-5(14)]:~~ **Emissions Unit Description:** Specifically Regulated insignificant activities include the following facilities, emission units, fugitive sources, control equipment, process equipment and operational practices:

***

SECTION D.27 FACILITY OPERATION CONDITIONS

~~Facility Description [326 IAC 2-7-5(14)]:~~ **Emissions Unit Description:**

~~***~~

SECTION F.1 FACILITY OPERATION CONDITIONS - NSPS, SUBPART Dc

~~Facility Description [326 IAC 2-7-5(14)]:~~ **Emissions Unit Description:** Note: Complete Descriptions are shown in Section A.2.

***

SECTION F.2 FACILITY OPERATION CONDITIONS - NSPS, SUBPART Y

~~Facility Description [326 IAC 2-7-5(14)]:~~ **Emissions Unit Description:**

***

SECTION F.3 FACILITY OPERATION CONDITIONS - NSPS, SUBPART D

~~Facility Description [326 IAC 2-7-5(14)]~~ **Emissions Unit Description:**

***

SECTION F.4 FACILITYOPERATION CONDITIONS - NSPS, SUBPART Db

~~Facility Description [326 IAC 2-7-5(15)]:~~ **Emissions Unit Description:** One (1) No. 2 Coke Plant Boiler House

***

SECTION F.5 FACILITY OPERATION CONDITIONS - NSPS, SUBPART IIII

~~Facility Description [326 IAC 2-7-5(14)]:~~ **Emissions Unit Description:**

~~***~~

SECTION F.6 FACILITY OPERATION CONDITIONS - NESHAP, SUBPART ZZZZ

~~Facility Description [326 IAC 2-7-5(14)]:~~ **Emissions Unit Description:** Note: Complete Descriptions are shown in Section A.2.

***

SECTION F.7 FACILITY OPERATION CONDITIONS - NESHAP, SUBPART L

~~Facility Description [326 IAC 2-7-5(15)]:~~ **Emissions Unit Description:** The Coke Battery Operations

***

SECTION F.8 FACILITY OPERATION CONDITIONS - NESHAP, SUBPART CCCCC

~~Facility Description [326 IAC 2-7-5(15)]:~~ **Emissions Unit Description:** The Coke Battery Operations

***

SECTION F.9 FACILITY OPERATION CONDITIONS - NESHAP, SUBPART FFFFF

~~Facility Description [326 IAC 2-7-5(14)]~~ **Emissions Unit Description:**

***

Number Two Q-BOP Shop

(f) One (1) Capped Argon Bubble (CAB) Station, approved in 2014 for construction, identified as NSC40296, with a maximum capacity of 477,000 tons per year, using the No. 3 LMF Hot Fume and Material Handling Baghouse NS3137 as control, and exhausting to stack NS6148. All uncontrolled emissions exhaust through the roof monitor NS6634.

***

F.9.2 National Emissions Standards for Hazardous Air Pollutants for Integrated Iron and Steel Manufacturing Facilities [40 CFR Part 63, Subpart FFFFF] [326 IAC 20-93]

Pursuant to 40 CFR Part 63, Subpart FFFFF, the Permittee shall comply with the provisions of this NESHAP (included as Attachment J of this permit), which are incorporated by reference as 326 IAC 20-93, as specified as follows:

(1) 40 CFR 63.7780
(2) 40 CFR 63.7781
(3) 40 CFR 63.7782(a), (b), (c), (d)
(4) 40 CFR 63.7783(a)~~(1),(2),~~ (e)
***

SECTION F.10 FACILITY OPERATION CONDITIONS - NESHAP, SUBPART CCC

~~Facility Description [326 IAC 2-7-5(14)]~~ **Emissions Unit Description:**

***

SECTION F.11 FACILITY OPERATION CONDITIONS - NESHAP, SUBPART L

~~Facility Description [326 IAC 2-7-5(14)]:~~ **Emissions Unit Description:**

***

SECTION F.12 FACILITY OPERATION CONDITIONS - NESHAP, SUBPART V

~~Facility Description [326 IAC 2-7-5(14)]:~~ **Emissions Unit Description:**

***

SECTION F.13 FACILITY OPERATION CONDITIONS - NESHAP, SUBPART FF

~~Facility Description [326 IAC 2-7-5(14)]:~~ **Emissions Unit Description:**

***

SECTION F.14 FACILITY OPERATION CONDITIONS - NESHAP, SUBPART DDDDD

~~Facility Description [326 IAC 2-7-5(14)]:~~ **Emissions Unit Description:**

***

~~INDIANA DEPARTMENT OF ENVIRONMENTAL MANAGEMENT~~
~~OFFICE OF AIR QUALITY~~
~~COMPLIANCE AND ENFORCEMENT BRANCH~~

~~PART 70 OPERATING PERMIT~~
~~SEMI-ANNUAL NATURAL GAS FIRED BOILER CERTIFICATION~~

~~Source Name: U.S. Steel - Gary Works~~
~~Source Address: One North Broadway, Gary, IN 46402~~
~~Part 70 Permit No.: T089-29907-00121~~
~~Facility:~~

☐ ~~Natural Gas Only~~ ☐ ~~Alternative Fuel Burned~~ ~~From:~~ _____ ~~To:~~ _____

~~I certify that, based on information and belief formed after reasonable inquiry, the statements and information in the document are true, accurate, and complete.~~
~~Signature:~~
~~Printed Name:~~
~~Title/Position:~~
~~Phone:~~
~~Date:~~

Conclusion and Recommendation

The construction of this proposed modification shall be subject to the conditions of the attached proposed Part 70 Significant Source Modification No. 089-33648-00121 and Significant Permit Modification No. 089-33651-00121. The staff recommend to the Commissioner that this Part 70 Significant Source and Significant Permit Modification be approved.

IDEM Contact

(a) Questions regarding this proposed permit can be directed to Kristen Willoughby at the Indiana Department Environmental Management, Office of Air Quality, Permits Branch, 100 North Senate Avenue, MC 61-53 IGCN 1003, Indianapolis, Indiana 46204-2251 or by telephone at (317) 233-3031 or toll free at 1-800-451-6027 extension 3-3031.

(b) A copy of the findings is available on the Internet at: http://www.in.gov/ai/appfiles/idem-caats/

(c) For additional information about air permits and how the public and interested parties can participate, refer to the IDEM's Guide for Citizen Participation and Permit Guide on the Internet at: www.idem.in.gov

Appendix A: Emissions Calculations
Capped Argon Bubbling (CAB) Station

Company Name: **U.S. Steel Corporation - Gary Works**
Company Address: **One North Broadway, Gary, IN 46206**
Significant Source Modification No.: **089-33648-00121**
Significant Permit Modification No.: **089-33651-00121**
Reviewer: **Kristen Willoughby**

Pollutant	Throughput (ton/yr)	*Emission Factor (lb/ton)	Capture Efficiency (%)	Control Efficiency (%)	Uncontrolled Emissions (tpy)	Controlled Emissions (tpy)	Fugitive Emissions (tpy)	Limited Emissions (tpy)
PM	477000	0.235	98%	99%	56.05	0.55	1.12	11.83
PM10	477000	0.235	98%	99%	56.05	0.55	1.12	11.83
PM2.5	477000	0.235	98%	99%	56.05	0.55	1.12	8.78
SO2	477000	-	-	-	-	-	-	-
VOC	477000	-	-	-	-	-	-	-
CO	477000	0.05	-	-	11.93	11.93	-	-
NOx	477000	0.003	-	-	0.72	0.72	-	-
Lead	477000	0.000186	98%	99%	0.04	4.35E-04	8.87E-04	0.04

*There are no published emission factors for this type of process. Instead, emission factors were based upon previous emission factors used for the No. 3 LMF Baghouse and the No. 1 BOP Shop CAS-OB Stations and reported in ISTEPS. These values were selected as worst-case rates, because the proposed project is expected to be less emissive.

The only carbon emissions associated with this process are carbon monoxide emissions. A worst-case estimate of CO2e emissions is done based on the complete conversion of CO to CO2.

$$11.93 \frac{\text{tons of CO}}{\text{year}} \times \frac{44}{28} \frac{\text{tons of CO2}}{\text{tons CO}} = 18.74 \frac{\text{tons of CO2}}{\text{year}}$$

Appendix A: Emissions Calculations
Summary of CASP Project Emissions
(page 1 of 2)

Company Name: **U.S. Steel - Gary Works**
Company Address: **One North Broadway, Gary, Indiana 46402**
Significant Source Modification No.: **089-33648-00121**
Significant Permit Modification No.: **089-33651-00121**
Reviewer: **Kristen Willoughby**

1. Summary of Emissions Associated with CASP Project

Emissions per CASP Module	CO (tpy)	NOx (tpy)	PM (tpy)	PM10 (tpy)	PM2.5 (tpy)	SO2 (tpy)	VOC (tpy)	HAPs (tpy)
FER (Total of 4)	1.93E-06	14.02	7.01	7.01	7.01	1.75	4.38	4.38
PFR (Total of 2)	8.06E-05	28.03	27.16	27.16	27.16	66.58	2.19	2.19
Generators & Fire Pump	7.13	26.86	0.83	0.48	0.48	0.47	0.75	1.36E-02
Dust Collectors	--	--	17.20	17.20	17.20	--	--	--
Cooling Towers	--	--	6.86	6.86	6.86	--	neg	neg
Coal Tar Tanks	--	--	--	--	--	--	5.00	5.00
Diesel Fuel Tanks	--	--	--	--	--	--	1.00	1.00
Total per CASP:	7.13	68.91	59.06	58.71	58.71	68.80	13.32	12.58
Phase 1 - CASP C & D Material Handling Emissions								
Material Transfer	--	--	35.22	16.66	2.52	--	--	--
Storage Piles	--	--	4.56	2.28	0.34	--	--	--
Road Emissions	--	--	37.65	10.03	1.00	--	--	--
Totals:	--	--	77.43	28.97	3.87	--	--	--
Increased Utilization								
Pulverizer Building	5.15	6.13	0.47	0.18	0.18	0.04	0.34	neg
Coal Handling Processes	0.00	0.00	7.88	4.73	4.73	0.00	0.00	0.00
Totals:	5.15	6.13	8.35	4.91	4.91	0.04	0.34	0.00
Contemporaneous Emissions	195.09	124.95	154.85	87.58	72.25	12.02	37.61	neg.
Phase 1 - Units Shutdown Prior to Start of Project.								
#3 COB (shutdown)	-263.32	-501.06	-288.20	-255.62	-255.62	-149.52	-148.95	
#3 Coke Battery Pre-Carb Facility (shutdown)	-2554.96	-32.18	-75.45	-76.87	-76.87	-4.73	-374.25	
Phase 2 - Emissions Increase from Phase 1 (includes throughput increases & new emission points):								
Material Transfer	--	--	54.80	28.41	3.93	--	--	--
Storage Piles	--	--	3.98	6.29	0.94	--	--	--
Road Emissions	--	--	17.46	4.65	0.47	--	--	--
Totals - Phase 2 New Emissions:	--	--	76.25	39.35	5.33	--	--	--
Phase 2 - Units Shutdown as Part of the Project.								
#5 COB	161.02	329.25	124.94	134.72	134.72	107.73	98.06	
#7 COB	168.87	345.31	122.72	107.83	107.83	66.23	102.84	
#5 / #6 Coke Quench Towers	0.00	0.00	28.06	6.42	6.42	0.00	1.36	

2. Phase 1 of CASP Project Netting Analysis

	CO (tpy)	NOx (tpy)	PM (tpy)	PM10 (tpy)	PM2.5 (tpy)	SO2 (tpy)	VOC (tpy)	HAPs (tpy)
CASP C & D	14.27	137.82	118.12	117.42	117.42	137.60	26.64	25.17
Phase I Material Handling Emissions	--	--	77.43	28.97	3.87	--	--	--
Increased Utilization	5.15	6.13	8.35	4.91	4.91	0.04	0.34	0.00
Phase 1 PTE	**19.42**	**143.96**	**203.90**	**151.31**	**126.20**	**137.64**	**26.97**	**25.17**
Contemporaneous Emissions Increases	195.09	124.95	154.85	87.58	72.25	12.02	37.61	neg.
#3 COB Pre-Carb Credits	-2554.96	-32.18	-75.45	-76.87	-76.87	-4.73	-374.25	0.00
Phase 1 - Emissions Increase Prior to #3 COB Credits	*-2340.45*	*236.73*	*283.30*	*162.02*	*121.58*	*144.93*	*-309.66*	*25.17*
#3 Coke Oven Credits	-263.32	-501.06	-288.20	-255.62	-255.62	-149.52	-148.95	0.00
Phase 1 - Net Emissions Increase (NEI):	**-2603.77**	**-264.32**	**-4.89**	**-93.60**	**-134.04**	**-4.59**	**-458.61**	**25.17**
Significant Thresholds:	100	40	25	15	10	40	25	n/a

Appendix A: Emissions Calculations
Summary of CASP Project Emissions
(page 2 of 2)

3. Phase 2 of CASP Project Netting Analysis

3.a) Startup of 3rd CASP	CO (tpy)	NOx (tpy)	PM (tpy)	PM10 (tpy)	PM2.5 (tpy)	SO2 (tpy)	VOC (tpy)	HAPs (tpy)
Phase 1 - Net Emissions Increase (NEI)	-2603.77	-264.32	-4.89	-93.60	-134.04	-4.59	-458.61	25.17
Emissions from Startup of 3rd CASP (A or B)	7.13	68.91	59.06	58.71	58.71	68.80	13.32	12.58
Phase 2 Material Handling Emissions Increase from Phase 1	--	--	76.25	39.35	5.33	--	--	--
No. 5 COB Baseline	161.02	329.25	*124.94*	*134.72*	*134.72*	*107.73*	98.06	0.00
No. 7 COB Baseline	*168.87*	*345.31*	122.72	107.83	107.83	66.23	*102.84*	0.00
Net Emissions Increase after 3rd CASP: [1)]	**-2757.66**	**-524.66**	**7.70**	**-103.37**	**-177.82**	**-2.01**	**-543.35**	**37.75**
Emissions from Startup of 4th CASP (A or B)	7.13	68.91	59.06	58.71	58.71	68.80	13.32	12.58
Remaining Baseline Credits (No.5 or No. 7 COB)	168.87	345.31	124.94	134.72	134.72	107.73	102.84	0.00
#5 / #6 Coke Quench Towers Shutdown	0.00	0.00	28.06	6.42	6.42	0.00	1.36	--
Net Emissions Increase after 4th CASP:	**-2919.40**	**-801.05**	**-86.23**	**-185.80**	**-260.25**	**-40.94**	**-634.22**	**50.33**

[1)] U.S. Steel - Gary Works has the option to shut down either #5 COB or #7 COB within 180 days after startup of the third CASP Module. Therefore, the lowest creditable emissions were used to calculate the NEI after the third CASP. The remaining emissions are used to calculate the NEI after the startup of the fourth CASP and the completion of the project.

Appendix A: Emissions Calculations
Feed Enhancement Reactors (FER) & Process Fusion Reactors (PFR) Emissions

Company Name: **U.S. Steel - Gary Works**
Company Address: **One North Broadway, Gary, Indiana 46402**
Significant Source Modification No.: **089-33648-00121**
Significant Permit Modification No.: **089-33651-00121**
Reviewer: **Kristen Willoughby**

1. FER Emissions

Per FER	Units	CO	NOx	PM/PM10/PM2.5	SO2	VOC	HAPs*
Uncontrolled Emissions	(lb/hr)	1.10E-07	0.80	40.00	2.20	unknown	unknown
Uncontrolled Emissions	(tpy)	4.82E-07	3.50	175.20	9.64	unknown	unknown
Controlled Emissions	(lb/hr)	1.10E-07	0.80	0.40	0.10	0.25	0.25
Controlled Emissions	(tpy)	4.82E-07	3.50	1.75	0.44	1.095	1.095
Uncontrolled Emissions per CASP (tpy)		1.93E-06	14.02	700.80	38.54	n/a	n/a
Controlled Emissions per CASP (tpy)		1.93E-06	14.02	7.01	1.75	4.38	4.38

2. PFR Emissions

Per PFR	Units	CO	NOx	PM/PM10/PM2.5	SO2	VOC	HAPs*
Uncontrolled Emissions	(lb/hr)	9.20E-06	3.20	310.00	151.60	unknown	unknown
Uncontrolled Emissions	(tpy)	4.03E-05	14.02	1357.80	664.01	unknown	unknown
Controlled Emissions	(lb/hr)	9.20E-06	3.20	3.10	7.60	0.25	0.25
Controlled Emissions	(tpy)	4.03E-05	14.02	13.58	33.29	1.095	1.095
Uncontrolled Emissions per CASP (tpy)		8.06E-05	28.03	2715.60	1328.02	n/a	n/a
Controlled Emissions per CASP (tpy)		8.06E-05	28.03	27.16	66.58	2.19	2.19

* Conservative Assumption that all VOCs are HAPs
Uncontrolled VOC/HAP numbers are not known

Appendix A: Emissions Calculations
Summary of CASP Project Emissions
Hazardous Air Polluntants (HAPs)

Company Name: **U.S. Steel - Gary Works**
Company Address: **One North Broadway, Gary, Indiana 46402**
Significant Source Modification No.: **089-33648-00121**
Significant Permit Modification No.: **089-33651-00121**
Reviewer: **Kristen Willoughby**

375,000 Coal (tpy) Annual Usage per CASP

HAP	E.F. (lb/ton coal)	Per CASP PTE (tpy)
Benzene	4.80E-04	9.00E-02
Toluene	5.10E-04	9.56E-02
Naphthalene	2.70E-04	5.06E-02
Phenol	7.10E-05	1.33E-02
Benzo(a)pyrene[1]	1.00E-06	1.88E-04
Acetone	2.30E-03	4.31E-01
Bromomethane	5.60E-04	1.05E-01
Chloromethane	7.60E-04	1.43E-01
Methylene Chloride	6.60E-04	1.24E-01
Carbon Disulfide	1.60E-05	3.00E-03
2-Butanone	6.30E-05	1.18E-02
1,1,1-trichloroethane	2.50E-06	4.69E-04
Ethylbenzene	3.20E-06	6.00E-04
m-/p-Xylene	1.30E-05	2.44E-03
o-Xylene	3.20E-06	6.00E-04
Idomethane	6.30E-06	1.18E-03
Dobromomethane	1.20E-05	2.25E-03
Trichlorofluoromethane	8.20E-06	1.54E-03
n-Hexane	1.50E-05	2.81E-03
Isooctane	1.60E-05	3.00E-03
P-Cymene	1.10E-06	2.06E-04
Cumene	1.40E-06	2.63E-04
2-Hexanone	2.80E-05	5.25E-03
Ethyl Methacrylate	3.40E-06	6.38E-04
Styrene	6.90E-06	1.29E-03
Vinyl Acetate	6.90E-06	1.29E-03
1,2,3-Trichloropropane	4.40E-06	8.25E-04
Chloroform	1.10E-05	2.06E-03
Dibromochloromethane	2.40E-07	4.50E-05
1,1,2-Trichloroethane	5.80E-07	1.09E-04
Bromoform	1.20E-06	2.25E-04
4-Methyl-2-Pentanone	8.90E-06	1.67E-03

HAP	E.F. (lb/ton coal)	Per CASP PTE (tpy)
1,1,2,2-Tetrachloroethane	2.00E-06	3.75E-04
1,4-Dichloro-2-butene	1.40E-06	2.63E-04
Tetrachloroethane	4.10E-07	7.69E-05
Tert-Butyl methyl ether	4.70E-08	8.81E-06
Chlorobenzene	1.20E-06	2.25E-04
Dimethyl Sulfide	3.20E-06	6.00E-04
Antimony	1.30E-04	2.44E-02
Arsenic	1.30E-03	2.44E-01
barium	1.30E-04	2.44E-02
Beryllium	2.00E-05	3.75E-03
Cadmium	1.80E-04	3.38E-02
Chromium	6.30E-04	1.18E-01
Copper	2.80E-03	5.25E-01
Manganese	3.00E-04	5.63E-02
Mercury	3.30E-04	6.19E-02
Nickel	5.80E-04	1.09E-01
Phosphorus	1.40E-02	2.63E+00
Selenium	3.20E-04	6.00E-02
Silver	4.50E-05	8.44E-03
Thallium	1.80E-04	3.38E-02
Zinc	5.10E-03	9.56E-01
Lead	3.10E-03	5.81E-01
	Total:	**6.56E+00**

Methodology
- E.F. (Emissions Factors) (lb/ton Coal) from U.S. EPA AP-42, Chapter 12.2 – Coke Production, Table 12.2.20 - Emission Factors for Coke Production: Nonrecovery Combustion Stacks
- PTE per CASP (tpy) = E.F. (lb/ton coal) x Annual Coal Usage per CASP (tons) x 1/(2000 lb/ton)

Appendix A: Emissions Calculations
Summary of CASP Project Emissions - Lead

Company Name: **U.S. Steel - Gary Works**
Company Address: **One North Broadway, Gary, Indiana 46402**
Significant Source Modification No.: **089-33648-00121**
Significant Permit Modification No.: **089-33651-00121**
Reviewer: **Kristen Willoughby**

1. Phase 1 of CASP Project Netting Analysis	Lead (Pb) (tpy)	
CASP C & D	1.16	
Increased Utilization	3.07E-05	Railcar heater system @ thaw shed (unlimited combustion of NG)
Phase 1 PTE	*1.16*	
Contempraneous Increases from SSM No. 089-33648-00121	0.04	
#3 COB Pre-Carb Credits	0.00	
#3 Coke Oven Credits	1.47	
Phase 1 - Net Emissions Increase (NEI):	**-0.27**	Phase 1 PTE - #3 COB Pre-Carb & Coke Oven Battery Credits
Significant Thresholds:	**0.60**	

2. Phase 2 of CASP Project Netting Analysis	Lead (Pb) (tpy)	
Phase 1 - Net Emissions Increase (NEI):	-0.27	
CASP A & B	1.16	
Phase 2 PTE	*0.90*	
#5 / #6 Quench Tower Credits	0.00	
#5 & #7 Coke Oven Credits	0.89	
Phase 2 - Net Emissions Increase (NEI):	**0.01**	Phase 2 PTE - #5 / #6 Quench Tower - #5 & #7 COB Coke Oven Battery Credits
Significant Thresholds:	**0.60**	

3. Summary of Baseline and Future Allowable Emissions

Units/Processes to be Shutdown as Part of Project									
Units/Processes	Lead (Pb) 2002				Lead (Pb) 2003				Average Emissions (tpy)
	Thoughput Rate (tons/coal)	E.F. (lb/ton coal)	Capture/Control (%)	Emissions (tpy)	Thoughput Rate (tons/coal)	E.F. (lb/ton coal)	Capture/Control (%)	Emissions (tpy)	
#3 COB									
underfire	988,833	0.00	0.00%	0.00	903,729	0.00	0.00%	0.00	0.00
charging	988,833	0.00	0.00%	0.00	903,729	0.00	0.00%	0.00	0.00
door leaks	988,833	0.00	0.00%	0.00	903,729	0.00	0.00%	0.00	0.00
pushing	988,833	1.39E-05	88.84%	1.53	903,729	1.39E-05	88.84%	1.40	1.47
topside	988,833	0.00	0.00%	0.00	903,729	0.00	0.00%	0.00	0.00
Totals:				**1.53**				**1.40**	**1.47**
#3 COB Precarb Facililty	988,833	0.00	97.99%	**0.00**	903,729	0.00	97.99%	**0.00**	**0.00**
#5 COB									
underfire	378,758	0.00	0.00%	0.00	377,265	0.00	0.00%	0.00	0.00
charging	378,758	0.00	0.00%	0.00	377,265	0.00	0.00%	0.00	0.00
door leaks	378,758	0.00	0.00%	0.00	377,265	0.00	0.00%	0.00	0.00
pushing	378,758	1.39E-05	91.77%	0.43	377,265	1.39E-05	91.77%	0.43	0.43
topside	378,759	0.00	0.00%	0.00	377,265	0.00	0.00%	0.00	0.00
Totals:				**0.43**				**0.43**	**0.43**
#7 COB									
underfire	396,744	0.00	0.00%	0.00	396,167	0.00	0.00%	0.00	0.00
charging	396,744	0.00	0.00%	0.00	396,167	0.00	0.00%	0.00	0.00
door leaks	396,744	0.00	0.00%	0.00	396,167	0.00	0.00%	0.00	0.00
pushing	396,744	1.39E-05	91.77%	0.45	396,167	1.39E-05	91.77%	0.45	0.45
topside	396,744	0.00	0.00%	0.00	396,167	0.00	0.00%	0.00	0.00
Totals:				**0.45**				**0.45**	**0.45**
#5,6 Coke Quench Towe	775,502	0.00	74.99%	**0.00**	773,432	0.00	74.99%	**0.00**	**0.00**

Lead - PTE (tpy)				
Railcar heater system assc. with thaw shed	Capacity (MMBtu/hr)	Throughput (MMscf/yr)	E.F (lb/mmscf)	Emissions (tpy)
Limited Combustion of NG [1)]	14	12.084	0.0005	3.02E-06
Unlimited NG Combustion	14	122.64	0.0005	3.07E-05

Baseline Emissions are assumed to be zero

Methodology:

Throughput (mmscf/yr) = Capacity (MMBtu/hr) * 1 MMscf /1000 MMBtu * 8760 hrs/yr

Emisions = E.F. (lb/mmscf) * throughput (mmscf/yr) * 1 ton/2,000 lbs

[1)] Thoughput (mmscf/yr) based on existing PSD minor limitations.

Appendix A: Emissions Calculations
Unpaved Roads Emissions

Company Name: U.S. Steel - Gary Works
Company Address: One North Broadway, Gary, Indiana 46402
Significant Source Modification No.: 089-33648-00121
Significant Permit Modification No.: 089-33651-00121
Reviewer: Kristen Willoughby

1. Unpaved Roads Specifications Reference: AP-42, 5th Edition, Section 13.2.2

$$E = k * (s/12)^a * (W/3)^b * [(365 - P)/365] * (1-CE\%/100)$$

where:	E=		emission factor (lb/vehicle mile traveled)
	k =	4.9	PM (particle size multiplier) (lb/VMT)
		1.5	PM10 (particle size multiplier) (lb/VMT)
		0.15	PM2.5 (particle size multiplier) (lb/VMT)
	sL =	6.0	silt loading ($g/m^{2)}$
	w =	see formula	average weight of vehicles (tons)
	a =	0.7	PM (empirical constant)
		0.9	PM10/PM2.5 (empirical constant)
	b =	0.45	PM/PM10/PM2.5 (empirical constant)
	p =	124	number of days per year with 0.01 inches precipitation
	CE =	50	% Control Efficiency

Fugitive dust control will be achieved through the application of chemical suppressants.
Application of chemical suppressant will be sufficient to achieve and maintain ground inventory of 0.15 gal/yd^2
Source Air Pollution Control Manual, 1992, Air Waste & Management Assoc. pg 144.

2. Unpaved Roads Emissions

Coal input per CASP = 375,000 tons per year
Cokonyx output per CASP = 300,000 tons per year

	Source Description	Vehicle Specifications		Vehicle Weight (tons)		Material Throughput	Number of Trips	Vehicle Miles			Emission Factors			Emissions		
		Type	Fill (yd^3)	Loaded	Unloaded			Feet per Round Trip	Traveled (VMT)/yr	w (tons)	PM (lbs/mile)	PM10 (lbs/mile)	PM2.5 (lbs/mile)	PM (tpy)	PM10 (tpy)	PM2.5 (tpy)
1.	PHS1 interm. Pile 1/PSH1 coal piles	Cat 992D	12.5	116.28	107	750,000	80,820	900.00	13776.14	112	5.07	1.35	0.14	17.460	4.653	0.465
2.	PSH1 coal piles/CASPA-F1	Cat 998F	7.8	59.79	54	750,000	129,519	800.00	19624.13	57	3.74	1.00	0.10	18.365	4.894	0.489
3.	PHS1 interm. Pile 2/PHS1C-C1	Cat 992D	13.3	116.90	107	375,000	37,894	100.00	717.69							
4.	PHS1 interm. Pile 2/PHS1D-C1	Cat 992D	13.3	116.90	107	375,000	37,894	100.00	717.69							
								Fleet Average:	1435.37	112	5.08	1.35	0.14	1.821	0.485	0.049
5.	C/D emergency storage piles/railcar	Cat 992D	12.5	116.28	107	600,000	1	200.00	0.04	112	5.07	1.35	0.14	4.80E-05	1.28E-05	1.28E-06
6.	A/B emergency storage piles/railcar	Cat 992D	12.5	116.28	107	600,000	1	200.00	0.04	112	5.07	1.35	0.14	4.80E-05	1.28E-05	1.28E-06
7.	CASP coal piles/CC-C/D1	Cat 992D	12.5	116.28	107	750,000	80,820	900.00	13776.14	112	5.07	1.35	0.14	1.75E+01	4.65E+00	4.65E-01
8.	CASP coal piles/CC-A/B1	Cat 992D	12.5	116.28	107	750,000	80,820	900.00	13776.14	112	5.07	1.35	0.14	1.75E+01	4.65E+00	4.65E-01
													Phase 1 Emissions (Lines 1 - 5) :	**37.65**	**10.03**	**1.00**

Where: Coal Weight = 0.74 ton/yd3, return trip empty

Emissions after Phase 2 Under Normal Operating Conditions (Lines 5 - 8):	34.92	9.31	0.93
Worst Case emissions after Phase 2 [A/B Emissions + C/D AOS (Alternative Operating Scenario)] (Lines 1 - 5, 6 & 8):	55.11	14.69	1.47
Phase 2 Emissions Increase from Phase 1 (Worst Case after Phase 2 - Phase 1 Emissions):	**17.46**	**4.65**	**0.47**

Appendix A: Emissions Calculations
Material Handling & Storage Pile Emissions
(page 1 of 5)

Company Name: **U.S. Steel - Gary Works**
Company Address: **One North Broadway, Gary, Indiana 46402**
Significant Source Modification No.: **089-33648-00121**
Significant Permit Modification No.: **089-33651-00121**
Reviewer: **Kristen Willoughby**

1. Material Information (per CASP)

Material	Moisture Content M (%)	Silt Content s (%)	Thoughput Per CASP (tpy)
Wet Coal	5.00	2.20	375,000
Billets	3.00	1.00	375,000
Billet Fines	3.00	1.00	50,000
Cokonyx	1.00	2.20	300,000

1. Moisture content for coal provided by US Steel. The Cokonyx will have a substantially lower moisture. These properties are assumed to be the same as for coke.
2. Silt content for coal as received by a power plant per AP-42 Table 13.2.4-1.

2. Emission Factor Calculation and Meteorological Information for Chicago, Illinois

U =	10.3	mph	Mean Wind Speed (Based on met data for Chicago, Illinois through 2008)
f =	35.0	%	% of time that unobstructed wind speed > 12 mph (Based on met data for Chicago, Illinois 1985-1990)
p =	120	days	Days of rain (AP-42 Figure 13.2.1-2)

E = k*(0.0032) * ((U/5)^1.3)/((M/2)^1.4)

where E =		Emission factor (lb/ton of material throughput)
k =	0.74	PM (particle size multiplier)
k=	0.35	PM10 (particle size multiplier)
k=	0.053	PM2.5 (particle size multiplier)
U =	10.3	mile/hr mean wind speed (outside)
U =	2.0	mile/hr mean wind speed (inside building)

3. Material Transfer Emissions

Source Description (Receiving Material)	Material Description	Emission Factor (lb/kton)			Throughput (t/yr/pt)		Phase 1 Emissions (tpy)			Phase 2 Emissions (tpy)		
		PM	PM10	PM2.5	Phase 1	Phase 2	PM	PM10	PM2.5	PM	PM10	PM2.5
Raw Material Receiving/Handling												
Phase 1 - coal receiving & handling												
PHS1 inter. pile #1	wet coal	1.68	0.79	0.12	750,000	AOS	0.63	0.30	0.05	0.00	0.00	0.00
PHS1 coal piles	wet coal	1.68	0.79	0.12	750,000	AOS	0.63	0.30	0.05	0.00	0.00	0.00
conv.-hopper (PHS1-HC1)	wet coal	1.68	0.79	0.12	750,000	AOS	0.63	0.30	0.05	0.00	0.00	0.00
PHS1 inter. pile #2	wet coal	1.68	0.79	0.12	750,000	AOS	0.63	0.30	0.05	0.00	0.00	0.00
Phase 1 - CASP C coal handling & input												
CASP C conv. #1 (PHS1C-C1)	wet coal	1.68	0.79	0.12	375,000	AOS	0.31	0.15	0.02	0.00	0.00	0.00
CASP C conv. #2 (PHS1C-C2)	wet coal	1.68	0.79	0.12	375,000	AOS	0.31	0.15	0.02	0.00	0.00	0.00
CASP C conv. #3 (PHS1C-C3)	***wet coal***	***1.68***	***0.79***	***0.12***	***876,000***	***AOS***	***0.74***	***0.35***	***0.05***	***0.00***	***0.00***	***0.00***
CASP C conv. #4 (PHS1C-C4)	***wet coal***	***1.68***	***0.79***	***0.12***	***876,000***	***AOS***	***0.74***	***0.35***	***0.05***	***0.00***	***0.00***	***0.00***
CASP C coal feed hopper (CASPC-FH2)	wet coal	1.68	0.79	0.12	375,000	375,000	0.31	0.15	0.02	0.31	0.15	0.02

Phase 1 - CASP D coal handling & input			0.79									
CASP D conv. #1 (PHS1D-D1)	wet coal	1.68	0.79	0.12	375,000	AOS	0.31	0.15	0.02	0.00	0.00	0.00
CASP D conv. #2 (PHS1D-D2)	wet coal	1.68	0.79	0.12	375,000	AOS	0.31	0.15	0.02	0.00	0.00	0.00
CASP D conv. #3 (PHS1D-D3)	***wet coal***	***1.68***	***0.79***	***0.12***	***876,000***	***AOS***	***0.74***	***0.35***	***0.05***	***0.00***	***0.00***	***0.00***
CASP D conv. #4 (PHS1D-D4)	***wet coal***	***1.68***	***0.79***	***0.12***	***876,000***	***AOS***	***0.74***	***0.35***	***0.05***	***0.00***	***0.00***	***0.00***
CASP D coal feed hopper (CASPD-FH2)	wet coal	1.68	0.79	0.12	375,000	375,000	0.31	0.15	0.02	0.31	0.15	0.02
Phase 2 - coal receiving & handling (CASP C & D)												
CASP conv. #1(CASP-C1)	wet coal	1.68	0.79	0.12	0	750,000	0.00	0.00	0.00	0.63	0.30	0.05
CASP conv. #2(CASP-C2)	wet coal	1.68	0.79	0.12	0	750,000	0.00	0.00	0.00	0.63	0.30	0.05
CASP rotary stacker (CASP-RS1)	wet coal	1.68	0.79	0.12	0	750,000	0.00	0.00	0.00	0.63	0.30	0.05
CASP coal piles	wet coal	1.68	0.79	0.12	0	750,000	0.00	0.00	0.00	0.63	0.30	0.05
Phase 2 - CASP C coal handling & input												
CASP C feed hopper (CASPC-FH1)	wet coal	1.68	0.79	0.12	0	375,000	0.00	0.00	0.00	0.31	0.15	0.02
CASP C Conv.#1 (CASPC-C1)	wet coal	1.68	0.79	0.12	0	375,000	0.00	0.00	0.00	0.31	0.15	0.02
CASP C Conv. #2 (CASPC-C2)	wet coal	1.68	0.79	0.12	0	375,000	0.00	0.00	0.00	0.31	0.15	0.02
Phase 2 - CASP D coal handling & input												
CASP D feed hopper (CASPD-FH1)	wet coal	1.68	0.79	0.12	0	375,000	0.00	0.00	0.00	0.31	0.15	0.02
CASP D Conv.#1 (CASPD-C1)	wet coal	1.68	0.79	0.12	0	375,000	0.00	0.00	0.00	0.31	0.15	0.02
CASP D Conv. #2 (CASPD-C2)	wet coal	1.68	0.79	0.12	0	375,000	0.00	0.00	0.00	0.31	0.15	0.02
Phase 1 (CASP C/D) also Phase 2 C/D AOS (alternative operating scenario):							**7.35**	**3.48**	**0.53**			
Emission units under Phase 1 (not part of Phase 2 Normal Operating Scenerio: however still permitted as AOS):										**6.72**	**3.18**	**0.48**
Phase 2 (CASP C/D):										**5.04**	**2.38**	**0.36**
Phase 2 - coal receiving & handling (CASP A/B)												
CASP conv. #1(CASP-C1)	wet coal	1.68	1.62	0.12	0	750,000	0.00	0.00	0.00	0.63	0.61	0.05
CASP conv. #2(CASP-C2)	wet coal	1.68	1.62	0.12	0	750,000	0.00	0.00	0.00	0.63	0.61	0.05
CASP rotary stacker (CASP-RS1)	wet coal	1.68	1.62	0.12	0	750,000	0.00	0.00	0.00	0.63	0.61	0.05
CASP coal piles	wet coal	1.68	1.62	0.12	0	750,000	0.00	0.00	0.00	0.63	0.61	0.05
Phase 2 - CASP A coal handling & input												
CASP A feed hopper (CASPA-FH1)	wet coal	1.68	1.62	0.12	0	375,000	0.00	0.00	0.00	0.31	0.30	0.02
CASP A Conv.#1 (CASPA-C1)	wet coal	1.68	1.62	0.12	0	375,000	0.00	0.00	0.00	0.31	0.30	0.02
CASP A Conv. #2 (CASPA-C2)	wet coal	1.68	1.62	0.12	0	375,000	0.00	0.00	0.00	0.31	0.30	0.02
CASP A coal feed hopper (CASPA-FH2)	wet coal	1.68	1.62	0.12	0	375,000	0.00	0.00	0.00	0.31	0.30	0.02
Phase 2 - CASP B coal handling & input												
CASP B feed hopper (CASPB-FH1)	wet coal	1.68	1.62	0.12	0	375,000	0.00	0.00	0.00	0.31	0.30	0.02
CASP B Conv.#1 (CASPB-C1)	wet coal	1.68	1.62	0.12	0	375,000	0.00	0.00	0.00	0.31	0.30	0.02
CASP B Conv. #2 (CASPB-C2)	wet coal	1.68	1.62	0.12	0	375,000	0.00	0.00	0.00	0.31	0.30	0.02
CASP B coal feed hopper (CASPB-FH2)	wet coal	1.68	1.62	0.12	0	375,000	0.00	0.00	0.00	0.31	0.30	0.02
								Phase 2 (CASP A/B) :		**5.04**	**4.87**	**0.36**
Billet Transfer Area												
CASP A												
billet fines hopper (OR-A-06-HP1125)	fines	0.41	0.19	0.03	0	50,000	0.00	0.00	0.00	0.01	0.00	0.00
billet fine conv (OR-A-06-CB1130)	fines	0.41	0.19	0.03	0	50,000	0.00	0.00	0.00	0.01	0.00	0.00
billet fine conv (OR-A-06-CB1140)	fines	0.41	0.19	0.03	0	50,000	0.00	0.00	0.00	0.01	0.00	0.00
billet fine conv (OR-A-06-CB1145)	fines	0.41	0.19	0.03	0	50,000	0.00	0.00	0.00	0.01	0.00	0.00
billet conv. (OR-A-06-CD1110)	billets	0.41	0.19	0.03	0	375,000	0.00	0.00	0.00	0.08	0.04	0.01
billet hopper (OR-A-06-HP1115)	billets	0.41	0.19	0.03	0	375,000	0.00	0.00	0.00	0.08	0.04	0.01
billet belt convs (OR-A-06-CB1120 or CB1126)	billets	0.41	0.19	0.03	0	375,000	0.00	0.00	0.00	0.08	0.04	0.01
billet belt convs (OR-A-06-CB2120 or CB2126)	billets	0.41	0.19	0.03	0	375,000	0.00	0.00	0.00	0.08	0.04	0.01
billet vib. feeders (OR-A-06-VF1125 or VF2126)	billets	0.41	0.19	0.03	0	375,000	0.00	0.00	0.00	0.08	0.04	0.01
two (2) trolley cars (OR-A-06-LD1128)	billets	0.41	0.19	0.03	0	375,000	0.00	0.00	0.00	0.08	0.04	0.01
two (2) trolley loading pans (OR-A-06-LD1128)	billets	0.41	0.19	0.03	0	375,000	0.00	0.00	0.00	0.08	0.04	0.01
billet hopper (OR-A-06-HP1135)	billets	0.41	0.19	0.03	0	375,000	0.00	0.00	0.00	0.08	0.04	0.01
billet conv (OR-A-06-CD1150)	billets	0.41	0.19	0.03	0	375,000	0.00	0.00	0.00	0.08	0.04	0.01
billet conv (OR-A-06-CD1160)	billets	0.41	0.19	0.03	0	375,000	0.00	0.00	0.00	0.08	0.04	0.01
billet conv (OR-A-06-CD1170)	billets	0.41	0.19	0.03	0	375,000	0.00	0.00	0.00	0.08	0.04	0.01
billet conv (OR-A-06-CD1180)	billets	0.41	0.19	0.03	0	375,000	0.00	0.00	0.00	0.08	0.04	0.01
billet conv (OR-A-06-CD1190)	billets	0.41	0.19	0.03	0	375,000	0.00	0.00	0.00	0.08	0.04	0.01
CASP B												

billet fines hopper (OR-B-06-HP1125)	billets	0.41	0.19	0.03	0	50,000	0.00	0.00	0.00	0.01	0.00	0.00
billet fine conv (OR-B-06-CB1130)	billets	0.41	0.19	0.03	0	50,000	0.00	0.00	0.00	0.01	0.00	0.00
billet fine conv (OR-B-06-CB1140)	billets	0.41	0.19	0.03	0	50,000	0.00	0.00	0.00	0.01	0.00	0.00
billet fine conv (OR-B-06-CB1145)	billets	0.41	0.19	0.03	0	50,000	0.00	0.00	0.00	0.01	0.00	0.00
billet conv. (OR-B-06-CD1110)	billets	0.41	0.19	0.03	0	375,000	0.00	0.00	0.00	0.08	0.04	0.01
billet hopper (OR-B-06-HP1115)	billets	0.41	0.19	0.03	0	375,000	0.00	0.00	0.00	0.08	0.04	0.01
billet belt convs (OR-B-06-CB1120 or CB1126)	billets	0.41	0.19	0.03	0	375,000	0.00	0.00	0.00	0.08	0.04	0.01
billet belt convs (OR-B-06-CB2120 or CB2126)	billets	0.41	0.19	0.03	0	375,000	0.00	0.00	0.00	0.08	0.04	0.01
billet vib. feeders (OR-B-06-VF1125 or VF2126)	billets	0.41	0.19	0.03	0	375,000	0.00	0.00	0.00	0.08	0.04	0.01
two (2) trolley cars (OR-B-06-LD1128)	billets	0.41	0.19	0.03	0	375,000	0.00	0.00	0.00	0.08	0.04	0.01
two (2) trolley loading pans (OR-B-06-LD1128)	billets	0.41	0.19	0.03	0	375,000	0.00	0.00	0.00	0.08	0.04	0.01
billet hopper (OR-B-06-HP1135)	billets	0.41	0.19	0.03	0	375,000	0.00	0.00	0.00	0.08	0.04	0.01
billet conv (OR-B-06-CD1150)	billets	0.41	0.19	0.03	0	375,000	0.00	0.00	0.00	0.08	0.04	0.01
billet conv (OR-B-06-CD1160)	billets	0.41	0.19	0.03	0	375,000	0.00	0.00	0.00	0.08	0.04	0.01
billet conv (OR-B-06-CD1170)	billets	0.41	0.19	0.03	0	375,000	0.00	0.00	0.00	0.08	0.04	0.01
billet conv (OR-B-06-CD1180)	billets	0.41	0.19	0.03	0	375,000	0.00	0.00	0.00	0.08	0.04	0.01
billet conv (OR-B-06-CD1190)	billets	0.41	0.19	0.03	0	375,000	0.00	0.00	0.00	0.08	0.04	0.01
CASP C												
billet fines hopper (OR-C-06-HP1125) - not constructed	*billets*	*0.41*	*0.19*	*0.03*	*50,000*	*50,000*	*0.01*	*0.00*	*0.00*	*0.01*	*0.00*	*0.00*
billet fine conv (OR-C-06-CB1130) - not constructed	*billets*	*0.41*	*0.19*	*0.03*	*50,000*	*50,000*	*0.01*	*0.00*	*0.00*	*0.01*	*0.00*	*0.00*
billet fine conv (OR-C-06-CB1140)	billets	0.41	0.19	0.03	50,000	50,000	0.01	0.00	0.00	0.01	0.00	0.00
billet fine conv (OR-C-06-CB1145)	billets	0.41	0.19	0.03	50,000	50,000	0.01	0.00	0.00	0.01	0.00	0.00
billet conv. (OR-C-06-CB1110)	billets	0.41	0.19	0.03	375,000	375,000	0.08	0.04	0.01	0.08	0.04	0.01
billet hopper (OR-C-06-HP1115) - not constructed	*billets*	*0.41*	*0.19*	*0.03*	*375,000*	*375,000*	*0.08*	*0.04*	*0.01*	*0.08*	*0.04*	*0.01*
billet belt convs (OR-C-06-CB1120 ~~or CB1126~~) - CB1126 not constructed	billets	0.41	0.19	0.03	375,000	375,000	0.08	0.04	0.01	0.08	0.04	0.01
billet belt convs (OR-C-06-CB2120 or CB2126) - not constructed	*billets*	*0.41*	*0.19*	*0.03*	*375,000*	*375,000*	*0.08*	*0.04*	*0.01*	*0.08*	*0.04*	*0.01*
billet vib. feeders (OR-C-06-VF1125 or VF2126) - not constructed	*billets*	*0.41*	*0.19*	*0.03*	*375,000*	*375,000*	*0.08*	*0.04*	*0.01*	*0.08*	*0.04*	*0.01*
billet shuttle belt (OR-C-06-CB1125	***billets***	***0.41***	***0.19***	***0.03***	***525,600***	***525,600***	***0.11***	***0.05***	***0.01***	***0.11***	***0.05***	***0.01***
two (2) trolley cars (OR-C-06-LD1128) - not constructed	billets	0.41	0.19	0.03	375,000	375,000	0.08	0.04	0.01	0.08	0.04	0.01
two (2) trolley loading pans (OR-C-06-LD1128) - not constructed	billets	0.41	0.19	0.03	375,000	375,000	0.08	0.04	0.01	0.08	0.04	0.01
billet hopper (OR-C-06-HP1135) - not constructed	billets	0.41	0.19	0.03	375,000	375,000	0.08	0.04	0.01	0.08	0.04	0.01
billet conv (OR-C-06-CD1150) - not constructed	billets	0.41	0.19	0.03	375,000	375,000	0.08	0.04	0.01	0.08	0.04	0.01
billet conv (OR-C-06-CD1160) - not constructed	billets	0.41	0.19	0.03	375,000	375,000	0.08	0.04	0.01	0.08	0.04	0.01
billet conv (OR-C-06-CD1170) - not constructed	billets	0.41	0.19	0.03	375,000	375,000	0.08	0.04	0.01	0.08	0.04	0.01
billet conv (OR-C-06-CD1180) - not constructed	billets	0.41	0.19	0.03	375,000	375,000	0.08	0.04	0.01	0.08	0.04	0.01
billet conv (OR-C-06-CD1190) - not constructed	billets	0.41	0.19	0.03	375,000	375,000	0.08	0.04	0.01	0.08	0.04	0.01
CASP D												
billet fines hopper (OR-D-06-HP1125)	billets	0.41	0.19	0.03	50,000	50,000	0.01	0.00	0.00	0.01	0.00	0.00
billet fine conv (OR-D-06-CB1130)	billets	0.41	0.19	0.03	50,000	50,000	0.01	0.00	0.00	0.01	0.00	0.00
billet fine conv (OR-D-06-CB1140)	billets	0.41	0.19	0.03	50,000	50,000	0.01	0.00	0.00	0.01	0.00	0.00
billet fine conv (OR-D-06-CB1145)	billets	0.41	0.19	0.03	50,000	50,000	0.01	0.00	0.00	0.01	0.00	0.00
billet conv. (OR-D-06-CD1110)	billets	0.41	0.19	0.03	375,000	375,000	0.08	0.04	0.01	0.08	0.04	0.01
billet hopper (OR-D-06-HP1115)	billets	0.41	0.19	0.03	375,000	375,000	0.08	0.04	0.01	0.08	0.04	0.01
billet belt convs (OR-D-06-CB1120 or CB1126)	billets	0.41	0.19	0.03	375,000	375,000	0.08	0.04	0.01	0.08	0.04	0.01
billet belt convs (OR-D-06-CB2120 or CB2126)	billets	0.41	0.19	0.03	375,000	375,000	0.08	0.04	0.01	0.08	0.04	0.01
billet vib. feeders (OR-D-06-VF1125 or VF2126)	billets	0.41	0.19	0.03	375,000	375,000	0.08	0.04	0.01	0.08	0.04	0.01
two (2) trolley cars (OR-D-06-LD1128)	billets	0.41	0.19	0.03	375,000	375,000	0.08	0.04	0.01	0.08	0.04	0.01
two (2) trolley loading pans (OR-D-06-LD1128)	billets	0.41	0.19	0.03	375,000	375,000	0.08	0.04	0.01	0.08	0.04	0.01
billet hopper (OR-D-06-HP1135)	billets	0.41	0.19	0.03	375,000	375,000	0.08	0.04	0.01	0.08	0.04	0.01
billet conv (OR-D-06-CD1150)	billets	0.41	0.19	0.03	375,000	375,000	0.08	0.04	0.01	0.08	0.04	0.01
billet conv (OR-D-06-CD1160)	billets	0.41	0.19	0.03	375,000	375,000	0.08	0.04	0.01	0.08	0.04	0.01
billet conv (OR-D-06-CD1170)	billets	0.41	0.19	0.03	375,000	375,000	0.08	0.04	0.01	0.08	0.04	0.01
billet conv (OR-D-06-CD1180)	billets	0.41	0.19	0.03	375,000	375,000	0.08	0.04	0.01	0.08	0.04	0.01
billet conv (OR-D-06-CD1190)	billets	0.41	0.19	0.03	375,000	375,000	0.08	0.04	0.01	0.08	0.04	0.01
Finish Product Handling and Loading												
CASP A - FPHLA												
Cokonyx belt convs (OR-A-08-CB1020 or CB1030)	cokonyx	1.90	0.90	0.14	0	300,000	0.00	0.00	0.00	0.28	0.13	0.02
Cokonyx belt convs (OR-A-08-CB2020 or CB2030)	cokonyx	1.90	0.90	0.14	0	300,000	0.00	0.00	0.00	0.28	0.13	0.02

Cokonyx belt conv (OR-A-08-CB1035)	cokonyx	1.90	0.90	0.14	0	300,000	0.00	0.00	0.00	0.28	0.13	0.02
CASP B - FPHLB												
Cokonyx belt convs (OR-B-08-CB1020 or CB1030)	cokonyx	1.90	0.90	0.14	0	300,000	0.00	0.00	0.00	0.28	0.13	0.02
Cokonyx belt convs (OR-B-08-CB2020 or CB2030)	cokonyx	1.90	0.90	0.14	0	300,000	0.00	0.00	0.00	0.28	0.13	0.02
Cokonyx belt conv (OR-B-08-CB1035)	cokonyx	1.90	0.90	0.14	0	300,000	0.00	0.00	0.00	0.28	0.13	0.02
CASP C - FPHLC												
Cokonyx belt convs (OR-C-08-CB1020 or CB1030)	cokonyx	1.90	0.90	0.14	300,000	300,000	0.28	0.13	0.02	0.28	0.13	0.02
Cokonyx belt convs (OR-C-08-CB2020 or CB2030)	cokonyx	1.90	0.90	0.14	300,000	300,000	0.28	0.13	0.02	0.28	0.13	0.02
Cokonyx belt conv (OR-C-08-CB1035)	cokonyx	1.90	0.90	0.14	300,000	300,000	0.28	0.13	0.02	0.28	0.13	0.02
CASP D - FPHLD												
Cokonyx belt convs (OR-D-08-CB1020 or CB1030)	cokonyx	1.90	0.90	0.14	300,000	300,000	0.28	0.13	0.02	0.28	0.13	0.02
Cokonyx belt convs (OR-D-08-CB2020 or CB2030)	cokonyx	1.90	0.90	0.14	300,000	300,000	0.28	0.13	0.02	0.28	0.13	0.02
Cokonyx belt conv (OR-D-08-CB1035)	cokonyx	1.90	0.90	0.14	300,000	300,000	0.28	0.13	0.02	0.28	0.13	0.02
Cokonyx Loadout												
two (2) vibratory screener feeders for CASP A	cokonyx	15.99	7.56	1.15	0	300,000	0.00	0.00	0.00	2.40	1.13	0.17
two (2) vibratory screener feeders for CASP B	cokonyx	15.99	7.56	1.15	0	300,000	0.00	0.00	0.00	2.40	1.13	0.17
two (2) vibratory screener feeders for CASP C	cokonyx	15.99	7.56	1.15	300,000	300,000	2.40	1.13	0.17	2.40	1.13	0.17
two (2) vibratory screener feeders for CASP D	cokonyx	15.99	7.56	1.15	300,000	300,000	2.40	1.13	0.17	2.40	1.13	0.17
two (2) emergency by-pass bunkers for CASP A	cokonyx	15.99	7.56	1.15	0	300,000	0.00	0.00	0.00	2.40	1.13	0.17
two (2) emergency by-pass bunkers for CASP B	cokonyx	15.99	7.56	1.15	0	300,000	0.00	0.00	0.00	2.40	1.13	0.17
A/B Cokonyx Emergency Storage Pile	cokonyx	15.99	7.56	1.15	0	500,000	0.00	0.00	0.00	4.00	1.89	0.29
two (2) emergency by-pass bunkers for CASP C	cokonyx	15.99	7.56	1.15	300,000	300,000	2.40	1.13	0.17	2.40	1.13	0.17
two (2) emergency by-pass bunkers for CASP D	cokonyx	15.99	7.56	1.15	300,000	300,000	2.40	1.13	0.17	2.40	1.13	0.17
C/D Cokonyx Emergency Storage Pile	cokonyx	15.99	7.56	1.15	0	500,000	0.00	0.00	0.00	4.00	1.89	0.29
CKNXC-A1 or CKNXC-A2	cokonyx	15.99	7.56	1.15	0	300,000	0.00	0.00	0.00	2.40	1.13	0.17
CKNXC-B1 or CKNXC-B2	cokonyx	15.99	7.56	1.15	0	300,000	0.00	0.00	0.00	2.40	1.13	0.17
CKNXC-C1 or CKNXC-C2	cokonyx	15.99	7.56	1.15	300,000	300,000	2.40	1.13	0.17	2.40	1.13	0.17
CKNXC-D1 or CKNXC-D2	cokonyx	15.99	7.56	1.15	300,000	300,000	2.40	1.13	0.17	2.40	1.13	0.17
CKNXC-A/B	cokonyx	15.99	7.56	1.15	0	600,000	0.00	0.00	0.00	4.80	2.27	0.34
CKNXC-C/D	cokonyx	15.99	7.56	1.15	300,000	600,000	2.40	1.13	0.17	4.80	2.27	0.34
CKNXBin- A/B	cokonyx	15.99	7.56	1.15	0	600,000	0.00	0.00	0.00	4.80	2.27	0.34
CKNXBin- C/D	cokonyx	15.99	7.56	1.15	300,000	600,000	2.40	1.13	0.17	4.80	2.27	0.34
Cokonyx Loadout to Railcar	cokonyx	15.99	7.56	1.15	600,000	1,200,000	4.80	2.27	0.34	9.59	4.54	0.69
						Phase 1 Emissions:	**35.22**	**16.66**	**2.52**			
						Phase 2 Emissions Under Normal Operating Scenario:				**83.30**	**41.89**	**5.97**
						Emission units under Phase 1 (not part of Phase 2 Normal Operating Scenerio: however still permitted as AOS):				**6.72**	**3.18**	**0.48**
						Phase 2 Emissions Increase Over Phase 1 Emissions, including AOS Emissions:				**54.80**	**28.41**	**3.93**

Appendix A: Emissions Calculations
Material Handling & Storage Pile Emissions
(page 5 of 5)

4. Storage Piles Emissions

	Source Description	Number 0f Piles	Acreage (acres)	Emission Factor (E) (lb/acre/day)			CE (%)	Uncontrolled Emissions (tpy)			PTE (after control) (tpy)		
				PM	PM10	PM2.5		PM	PM10	PM2.5	PM	PM10	PM2.5
1.	PHS1 inter. coal storage pile no. 1	1	0.25	6.07	3.03	0.45	0	0.28	0.14	0.02	2.77E-01	1.38E-01	2.08E-02
2.	PHS1 coal storage piles (1 of 4)	4	0.9	6.07	3.03	0.45	0	3.98	1.99	0.30	3.98E+00	1.99E+00	2.99E-01
3.	PHS1 inter.coal storage pile no. 2	1	0.25	6.07	3.03	0.45	0	0.28	0.14	0.02	2.77E-01	1.38E-01	2.08E-02
4.	CASP coal storage piles (1 of 4)	4	0.9	6.07	3.03	0.45	0	3.98	1.99	0.30	3.98E+00	1.99E+00	2.99E-01
5.	A/B Cokonyx Em. storage pile	1	0.02	6.07	3.03	0.45	0	0.02	0.01	0.00	2.21E-02	1.11E-02	1.66E-03
6.	C/D Cokonyx Em. storage pile	1	0.02	6.07	3.03	0.45	0	0.02	0.01	0.00	2.21E-02	1.11E-02	1.66E-03
										Phase 1 CASP Emissions (Lines 1-3 & 6):	**4.56**	**2.28**	**0.34**
										Emissions after Phase 2 Under Normal Operating Conditions (Lines 4-6):	4.03	2.01	0.30
										Worst Case Emissions after Phase 2 [A/B Emissions + C/D AOS (Alternative Operating Scenario)] Lines 1-4 & 6):	8.55	4.27	0.64
										Phase 2 Emissions Increase from Phase 1 (Worst Case after Phase 2 - Phase 1 Emissions):	**3.98**	**6.29**	**0.94**

Reference: AP-42, Ch 12.3-5 (05/1983), as updated with the addition of the particle size multiplier (k)
Where the inclusion of "k" is referenced by "Control of Open Fugitive Dust Sources, EPA 450/3-88-088 (1988)"

$$E = 1.7 * k * (s/1.5) [(365-p) / 235] (f/15)$$

where:	E =		emission factor (lb/day/acre of stockpile)
	k =	1.00	PM (particle size multiplier)
	k=	0.50	PM10 (particle size multiplier)
	k=	0.075	PM2.5 (particle size multiplier)
	s =	2.20	% silt content (ave)
	p =	120	number of days with >= 0.01 in. of precipitation
	f =	35.0	% of time that unobstructed wind speed exceeds 12 mph at the mean pile height

Units in this color have been added since the issuance of the original netting project
units in this color will not be constructed, but are not being removed from the netting tables.

Appendix A: Emissions Calculations
PM/PM10/PM2.5 Emissions from Dust Collectors

Company Name: **U.S. Steel - Gary Works**
Company Address: **One North Broadway, Gary, Indiana 46402**
Significant Source Modification No.: **089-33648-00121**
Significant Permit Modification No.: **089-33651-00121**
Reviewer: **Kristen Willoughby**

Collector ID	Emission Units (ID)	Flow Rate (acfm)	Grain Loading (gr/dscf)	Controlled PM/PM10/PM2.5		Control Eff. (%)	Uncontrolled PM/PM10/PM2.5	
				(lbs/hr)	(ton/yr)		(lbs/hr)	(ton/yr)
OR-X-01-DC1105	wet coal (RMRHSX)	1,100	0.005	0.05	0.21	99.9%	47	206
OR-X-01-DC2105	wet coal (RMRHSX)	1,100	0.005	0.05	0.21	99.9%	47	206
OR-X-02-DC1070	dry coal bin (RMRHSX)	800	0.005	0.03	0.15	99.9%	34	150
OR-X-02-DC2070	dry coal bin (RMRHSX)	800	0.005	0.03	0.15	99.9%	34	150
OR-X-02-DC3070	dry coal bin (RMRHSX)	800	0.005	0.03	0.15	99.9%	34	150
OR-X-02-DC4070	dry coal bin (RMRHSX)	800	0.005	0.03	0.15	99.9%	34	150
OR-X-02-DC5070	dry coal bin (RMRHSX)	800	0.005	0.03	0.15	99.9%	34	150
OR-X-01-DC1205	coal dryer (CDX1)	30,000	0.005	1.29	5.63	99.9%	1,286	5,631
OR-X-01-DC2205	dry dryer (CDX2)	30,000	0.005	1.29	5.63	99.9%	1,286	5,631
OR-X-02-DC1105	coal crusher (CCX1)	2,500	0.005	0.11	0.47	99.9%	107	469
OR-X-02-DC2105	coal crusher (CCX2)	2,500	0.005	0.11	0.47	99.9%	107	469
OR-X-03-DC1105	blend #1 (CBSBX)	2,500	0.005	0.11	0.47	99.9%	107	469
OR-X-04-DC1105	blend #1 feed hopper (CBSBX)	800	0.005	0.03	0.15	99.9%	34	150
OR-X-05-DC1205	Carborec crusher (CBSBX)	2,500	0.005	0.11	0.47	99.9%	107	469
OR-X-05-DC1405	Carborec crusher (CBSBX)	9,600	0.005	0.41	1.80	99.9%	411	1,802
OR-X-05-DC6070	Carborec bin (CBSBX)	850	0.005	0.04	0.16	99.9%	36	160
OR-X-06-DC1405	blend #2 bin (CBSBX)	850	0.005	0.04	0.16	99.9%	36	160
OR-X-06-DC1205	green fines (FPHLX)	2,500	0.005	0.11	0.47	99.9%	107	469
OR-X-12-DC1006	lime bin (LSX)	850	0.005	0.04	0.16	99.9%	36	160
			Totals:	**3.93**	**17.20**		3,927.86	17,204.01

Where: X = A for CASP A
B for CASP B
C for CASP C
D for CASP D

Methodology:
Controlled PTE PM/PM10 (lb/hr) = air flow (acfm) * loading (grain/dscf) * 60 (min/hr) * 1/7000 (gr/lb)
Controlled PTE PM/PM10 (tpy) = Controlled PTE (lb/hr) * 8760 hrs/yr * 1/2000 lb/ton
Uncontrolled PTE PM/PM10 (lb/hr) = controlled PTE PM/PM10 (lb/hr) / (1- Control Eff.)
Uncontrolled PTE PM/PM10 (tpy) = Uncontrolled PTE (tpy) / (1- Control Eff)

Control Efficiency of 99.9% used as a conservative estimate

Appendix A: Emission Calculations
Generators and Fire Pumps

Company Name: U.S. Steel - Gary Works
Company Address: One North Broadway, Gary, Indiana 46402
Significant Source Modification No.: 089-33648-00121
Significant Permit Modification No.: 089-33651-00121
Reviewer: Kristen Willoughby

Engine Description (per CASP)	Fuel Type	Rating (kW)	Rating (Hp)	Rating (MMBtu/hr)	Annual Hrs of Operation	Potential Throughput (MMBtu/yr)	Sulfur Content (S) of Fuel (% weight)
Fire Pump	diesel	235	315	2.2	500	1,102	0.05
Generator 1	diesel	1,650	2,211	15.5	500	7,739	0.05
Generator 2	diesel	1,650	2,211	15.5	500	7,739	0.05
Generator 3	NG	450	603	4.2	500	2,111	0.05

	Pollutant						
	PM*	PM10*	PM2.5*	SO2	NOx	VOC	CO
	Generators 1 & 2 (Diesel Fuel > 600 Hp)						
Emission Factor in lb/MMBtu	0.10	5.73E-02	5.73E-02	0.05 *(1.01S)*	3.20	0.09	0.85
Potential Emission in tons/yr	**0.77**	**0.44**	**0.44**	**0.39**	**24.76**	**0.70**	**6.58**
	Fire Pumps (Diesel Fuel < 600 Hp)						
Emission Factor in lb/MMBtu	0.31	0.31	0.31	0.05 *(1.01S)*	4.41	0.07	0.95
Potential Emission in tons/yr	**0.06**	**0.03**	**0.03**	**0.03**	**1.76**	**0.05**	**0.47**
	Generator 3 (Natural Gas Fuel)						
Emission Factor in lb/MMBtu	1.90E-03	6.60E-03	6.60E-03	0.05 *(1.01S)*	0.32	2.10E-03	8.20E-02
Potential Emission in tons/yr	**2.00E-03**	**6.96E-03**	**6.96E-03**	**5.33E-02**	**3.38E-01**	**2.22E-03**	**8.65E-02**
Totals (tpy) (per CASP):	**0.83**	**0.48**	**0.48**	**0.47**	**26.86**	**0.75**	**7.13**

HAP	**Diesel > 600 Hp**		**Natural Gas**	
	lb/MMBtu	**tpy**	**lb/MMBtu**	**tpy**
1,3-Butadiene	--	--	4.30E-07	4.54E-07
Acenaphthene	4.68E-05	3.62E-04	--	--
Acenaphthylene	9.23E-06	7.14E-05	--	--
Acetaldehyde	2.52E-05	1.95E-04	4.00E-05	4.22E-05
Acrolein	7.88E-06	6.10E-05	6.40E-06	6.75E-06
Anthracene	1.23E-06	9.52E-06	--	--
Benzene	7.76E-04	6.01E-03	1.20E-05	1.27E-05
Benz(a)anthracene	6.22E-07	4.81E-06	--	--
Benzo(a)pyrene	2.57E-07	1.99E-06	--	--
Benzo(b)fluoranthene	1.11E-06	8.59E-06	--	--
Benzo(g,h,i)perylene	5.56E-07	4.30E-06	--	--
Benzo(b,k)fluoranthene	2.18E-07	1.69E-06	--	--
Benzo(k)fluoranthene	--	--	--	--
Benzo(g,h,l)perylene	--	--	--	--
Chrysene[1]	1.53E-06	1.18E-05	--	--
Dibenzo(a,h)anthracene	3.46E-07	2.68E-06	--	--
Ethylbenzene	--	--	3.20E-05	3.38E-05
Fluoranthene	4.03E-06	3.12E-05	--	--
Fluorene	1.28E-05	9.91E-05	--	--
Formaldehyde	7.89E-05	6.11E-04	7.10E-04	7.49E-04
Indeno(1,2,3-cd)pyrene	4.14E-07	3.20E-06	--	--
Naphthalene	1.30E-04	1.01E-03	1.30E-06	1.37E-06
PAH	--	--	2.20E-06	2.32E-06
Phenanathrene	4.08E-05	3.16E-04	--	--
Propylene Oxide	--	--	2.90E-05	3.06E-05
Propylene	--	--	--	--
Pyrene	3.71E-06	2.87E-05	--	--
Toluene	2.81E-04	2.17E-03	1.30E-04	1.37E-04
Xylenes	1.93E-04	1.49E-03	6.40E-05	6.75E-05
		1.25E-02		1.08E-03
			TOTAL HAPs (per CASP):	**1.36E-02**

Methodology
Emission Factors are from AP 42 (Supplement B 10/96) Tables 3.1-1, 3.1-2a, 3.1-3, 3.4-1 , 3.4-2, 3.4-3, and 3.4-4
MMBtu/hr = output rating (hp) x 7,000 (btu/hp-hr) x 1 mmbtu / 1,000,000 btu
Potential Throughput (MMBtu/yr) = [Heat Input Capacity (MMBtu/hr)] * [Maximum Hours Operated per Year]
Potential Emission (tons/yr) = [Potential Throughput (MMBtu/yr)] * [Emission Factor (lb/MMBtu)] / [2,000 lb/ton]

Appendix A: Emissions Calculations
PM/PM10/PM2.5 Emissions from Cooling Towers

Company Name: **U.S. Steel - Gary Works**
Company Address: **One North Broadway, Gary, Indiana 46402**
Significant Source Modification No.: **089-33648-00121**
Significant Permit Modification No.: **089-33651-00121**
Reviewer: **Kristen Willoughby**

Cooling Tower Description (per CASP)	Flowrate (gpm)	Drift Loss (%)	Density of Liquid (lb/gal)	Total Dissolved Solids (ppm)	Drift Mass (%)	Drift Mass Flowrate (lb/hr)	Total PM/PM10/PM2.5 Emissions	
							(lb/hr)	(tpy)
PFR 1 Tower	20,000	0.025%	8.34	1,000	31.30%	2,502	0.78	3.43
PFR 2 Tower	20,000	0.025%	8.34	1,000	31.30%	2,502	0.78	3.43
						Totals (per CASP):	**1.57**	**6.86**

Methodology
Drift Mass Flowrate (lb/hr) = Flowrate (gpm) x % Drift Loss x Density of Liquid (lb/gal) * 60 (min/hr)
PM/PM10/PM2.5 PTE (lb/hr) = % Drift Mass x Drift Mass Flowrate (lb/hr) x Total Dissolved Solids (ppm) /1,000,000
PM/PM10/PM2.5 PTE (ton/yr) = PM/PM10/PM2.5 PTE (lb/hr) x 8760 (hrs/yr) x 1/2000 (lb/ton)

Appendix A: Emissions Calculations
Baseline Emissions
(page 1 of 2)

Company Name: **U.S. Steel - Gary Works**
Company Address: **One North Broadway, Gary, Indiana 46402**
Significant Source Modification No.: **089-33648-00121**
Significant Permit Modification No.: **089-33651-00121**
Reviewer: **Kristen Willoughby**

Units/Processes to be Shutdown as Part of Project																		
Units/Processes	CO			NOx			PM			PM10/PM2.5			SO2			VOC		
	2002	2003	Average	2002	2003	Average	2002	2003	Average	2002	2003	Average	2002	2003	Average	2002	2003	Average
#3 COB																		
underfire	222.49	203.34	212.92	514.19	469.94	492.07	232.38	212.38	222.38	222.83	203.66	213.25	138.44	126.52	132.48	153.27	140.08	146.68
charging	0	0	0.00	0	0	0.00	0.2	0.18	0.19	0.1	0.09	0.10	0	0	0.00	0	0	0.00
door leaks	1.84	1.6	1.72	0		0.00	3.96	3.61	3.79	3.96	3.61	3.79	0	0	0.00	0.3	0.27	0.29
pushing	50.43	46.09	48.26	9.39	8.59	8.99	63.45	58	60.73	27.59	25.22	26.41	17.8	16.27	17.04	1.98	1.81	1.90
topside	0.44	0.41	0.43	0	0	0.00	1.19	1.04	1.12	1.14	1.08	1.11	0	0	0.00	0.1	0.09	0.10
Totals:	275.2	251.44	**263.32**	523.58	478.53	**501.06**	301.18	275.21	**288.20**	255.62	233.66	**244.64**	156.24	142.79	**149.52**	155.65	142.25	**148.95**
#3 COB Precarb Facility	2669.85	2440.07	**2554.96**	33.62	30.73	**32.18**	78.84	72.05	**75.45**	76.87	70.25	**73.56**	4.94	4.52	**4.73**	391.08	357.42	**374.25**
#5 COB																		
underfire	141.28	140.72	141.00	326.3	325.01	325.66	105.11	104.69	104.90	100.86	100.47	100.67	55.45	56.23	55.84	97.34	96.96	97.15
charging	0	0	0.00	0	0	0.00	0.19	0.19	0.19	0.09	0.09	0.09	0	0	0.00	0	0	0.00
door leaks	0.57	0.57	0.57	0	0	0.00	1.52	1.51	1.52	1.52	1.51	1.52	0	0	0.00	0.11	0.11	0.11
pushing	19.32	19.24	19.28	3.6	3.58	3.59	17.92	17.85	17.89	7.79	7.76	32.01	6.82	6.79	51.89	0.76	0.75	0.76
topside	0.17	0.17	0.17	0	0	0.00	0.45	0.45	0.45	0.44	0.43	0.44	0	0	0.00	0.04	0.04	0.04
Totals:			**161.02**			**329.25**			**124.94**			**134.72**			**107.73**			**98.06**
#7 COB																		
underfire	147.99	147.77	147.88	341.79	341.3	341.55	101.76	101.62	101.69	97.6	97.46	97.53	59.13	59.05	59.09	101.96	101.81	101.89
charging	0	0	0.00	0	0	0.00	0.2	0.2	0.20	0.1	0.1	0.10	0	0	0.00	0	0	0.00
door leaks	0.6	0.59	0.60	0	0	0.00	1.59	1.58	1.59	1.59	1.58	1.59	0	0	0.00	0.12	0.12	0.12
pushing	20.23	20.2	20.22	3.77	3.76	3.77	18.77	18.75	18.76	8.16	8.15	8.16	7.14	7.13	7.14	0.79	0.79	0.79
topside	0.18	0.18	0.18	0	0	0.00	0.48	0.48	0.48	0.46	0.46	0.46	0	0	0.00	0.04	0.04	0.04
Totals:			**168.87**			**345.31**			**122.72**			**107.83**			**66.23**			**102.84**
#5,6 Coke Quench Towers	0	0	**0.00**	0	0	**0.00**	28.09	28.02	**28.06**	6.43	6.41	**6.42**	0	0	**0.00**	1.36	1.35	**1.36**

Appendix A: Emissions Calculations
Baseline Emissions
(page 2 of 2)

Unit/Processes	Worst Case Future Allowable Emissions (tpy)																	
	CO			NOx			PM			PM10/PM2.5			SO2			VOC		
	E.F.	MMBtu/hr	PTE	E.F.	MMBtu/hr	PTE	E.F.	MMBtu/hr	PTE	E.F.	MMBtu/hr	PTE	E.F.	MMBtu/hr	PTE	E.F.	MMBtu/hr	PTE
Railcar heater system assc. with thaw shed (Natural Gas)	84	14	5.15	100	14	6.13	7.6	14	0.47	3	14	0.18	0.6	14	0.04	5.5	14	0.34
Future Allowable Total:			**5.15**			**6.13**			**0.47**			**0.18**			**0.04**			**0.34**
Baseline Emissions:			0.00			0.00			0.00			0.00			0.00			0.00
Increased Utilization:			**5.15**			**6.13**			**0.47**			**0.18**			**0.04**			**0.34**

Baseline emissions = 0
PTE = E.F. (lb/MMBtu) x MMBtu/hr x 8760 (hrs/yr) x 1/(2000 lb/ton)

Worst Case Future Allowable Emissions (tpy)					
Coal Handling Processes	Stack ID	PM		PM10/PM2.5	
		(lb/hr)	(tpy)	(lb/hr)	(tpy)
Railcar Dumper (RCD-1)	8A	0.2	0.876	0.12	0.5256
	8B	0.2	0.876	0.12	0.5256
Reclaim Hopper (RCH-1)	DC-6	0.2	0.876	0.12	0.5256
Car Dump Hopper 1/C1 (FS-8)	F1	0.2	0.876	0.12	0.5256
Car Dump Hopper 2/C1 (FS-9)	F2	0.2	0.876	0.12	0.5256
Car Dump Hopper 3/C1 (FS-10)	F3	0.2	0.876	0.12	0.5256
Trnsfr pt C1/C2 (FS-2)	F4	0.2	0.876	0.12	0.5256
Reclaim Hopper/C2 (FS-14)	F5	0.2	0.876	0.12	0.5256
Sceen Trnsfr/C2 (FS-3)	F7	0.2	0.876	0.12	0.5256
Totals:			7.884		4.7304

Baseline Emissions = 0
PM/PM10 emissions (tpy) based on limited permitted emissions (lb/hr) at 8760 hrs of operation per year.
PM/PM10/PM2.5 (tpy) = PM/PM10/PM2.5 (lb/hr) x 8760 (hrs/yr) x 1/(2000 lb/ton)

Appendix A: Emissions Calculations
Contemporaneous Emissions

Company Name: U.S. Steel - Gary Works
Company Address: One North Broadway, Gary, Indiana 46402
Significant Source Modification No.: 089-33648-00121
Significant Permit Modification No.: 089-33651-00121
Reviewer: Kristen Willoughby

Company	Permit #	Date Issued	PM	PM10	PM2.5	SO2	NOx	VOC	CO
1(a) stockhouse baghouse									
USS Gary	SPM 089-27690-00121	10/5/2009	7.54	10.82	9.41	--	--	--	--
1(b) SPM - CAIR (opted-in)									
USS Gary	SPM 089-26519-00121	2/17/2009	--	--	--	--	--	--	--
1(c) RCRA Groundwater Remediation									
USS Gary	AA 089-27151-00121	1/12/2009	--	--	--	--	--	2.5	--
1(d) USS Gary purchased Gary Coal Processing, LP. purchase did not effect the PTE of USS Gary									
Since Gary Coal Processing, LP was considered "one-source" the emissions already were considered as part of USS Gary's PTE									
USS Gary	AA 089-26246-00121	4/24/2008	--	--	--	--	--	--	--
1(e) Initial Part 70 Operating permit									
USS Gary	TV 089-7663-00121	8/18/2006	--	--	--	--	--	--	--
1(f) Appeal Resolution - included correcting SIP limits to match properly reflect rule limits.									
USS Gary	SPM 089-23680-00121	10/22/2007	--	--	--	--	--	--	--
1(g) BF #14 reline and production increase									
USS Gary	SSM 089-20118-00121	10/20/2005	4.2	3.8	3.8	7.2	2.4	0.054	99
1(h) 84" hot strip mill									
USS Gary	SSM089-19709-00121	5/2/2005	--	--	--	--	--	1.06	--
1(i) CAMU Evaporative Spray System									
USS Gary	MSM 089-29913-00121	2/4/2011	0.0002	0.0002	0.0002	--	--	1.91	--
1(k) Capped Argon Bubbling (CAB) Station									
USS Gary	SSM 089-33648-00121	In house	12.9500	12.9500	9.9000	--	0.72	--	11.93
2(a) Name change and revisions to compliance monitoring									
IMS Division, Tube City IMS	SPM 089-23679-00132	4/19/2010	--	--	--	--	--	--	--
2(b) Part 70 Operating permit									
IMS Division, Tube City IMS	TV 089-5630-00132	8/17/2006	--	--	--	--	--	--	--
2(c) New Boiler 5 and GenB5									
IMS Division, Tube City IMS	SSM 089-33810-00132	Public Notice	1.18	4.6	4.6	0.58	31.92	3.63	51.11
3(a) Adjusted types of materials used. No change in source PTE									
South Shore Slag	AA 089-28755-00133	1/19/2010	--	--	--	--	--	--	--
3(b) Added material handling equipment									
South Shore Slag	SMP 089-28293-00133	11/30/2009	22.68	9.89	9.89	2.32	35.34	2.88	7.61
3(c) Descriptive changes									
South Shore Slag	AA 089-28128-00133	7/14/2009	--	--	--	--	--	--	--
3(d) Name Change									
South Shore Slag	AA 089-26455-00133	4/29/2008	--	--	--	--	--	--	--
3(e) Initial Part 70 Operating permit									
South Shore Slag	TV 089-7719-00133	6/29/2006	--	--	--	--	--	--	--
3 (f) 2 new Truck Loading Bins									
South Shore Slag	MSM 089-30972-00133	11/9/2011	1.0	0.38	0.38	--	--	--	--
3 (g) Vitrafine Plant									
South Shore Slag	SSM 089-31980-00133	11/8/2013	24.2	13.6	9.8	0.13	21.9	1.2	18.4
3.1 (a) iron ore pellet screening plant									
Tube City, IMS	SSM 089-30825-00170	12/2/2011	13.94	4.65	0.56	--	--	--	--
3.1 (a) name change from Harsco Metals									
Tube City, IMS	AA 089-32383-00170	11/30/2012	--	--	--	--	--	--	--
4(a) Part 70 Operating permit									
Oil Technology, Inc.	TV 089-24654-00171	1/29/2008	--	--	--	--	--	--	--
4(b) Addition of recycling tanks									
Oil Technology, Inc.	MSM 089-24500-00171	5/25/2007	20.2	3.94	3.94	--	--	16	--
5(a) Addition of a portable back-up stacker									
Central Teaming Comp	MPM 089-28211-00172	10/2/2009	3.92	1.77	1.77	-0.4	-0.63	-0.05	-0.13
5(b) Removal of two (2) units. No change in source PTE.									
Central Teaming Comp	AA 089-27079-00172	10/30/2008	--	--	--	--	--	--	--
5(c) Replacement of sludge unit (screener & diesel engine)									
Central Teaming Comp	AA 089-24555-00172	6/7/2007	1.05	1.05	1.05	0.63	9.5	0.77	2.05
5(d) Addition of screening unit. No change to source PTE									
Central Teaming Comp	AA 089-23657-00172	10/13/2006	--	--	--	--	--	--	--
5(e) Initial Part 70 Operating permit									
Central Teaming Comp	TV 089-7684-00172	06.30/2006	--	--	--	--	--	--	--
6(a) Change in equipment, limits required such that no change in source PTE occurred									
Mid-Cont. Coal & Coke	SPM 089-25334-00173	9/2/2008	--	--	--	--	--	--	--
6(b) Addition of a stacking conveyor. No change in source PTE occurred									
Mid-Cont. Coal & Coke	MPM 089-24352-00173	7/19/2007	--	--	--	--	--	--	--
6(c) Initial Part 70 Operating permit									
Mid-Cont. Coal & Coke	TV 089-8064-00173	6/30/2006	--	--	--	--	--	--	--
6(d) self-contained screening operation									
Mid-Cont. Coal & Coke	MSM 089-31998-00173	7/17/2012	8.99	3.91	0.93	--	--	--	--
7(a) Appeal Resolution - Name change, descriptive changes to facilities, and revisions to compliance monitoring									
Tube City, Inc	SPM 089-23674-00174	4/19/2010	--	--	--	--	--	--	--
7(b) Initial Part 70 Operating permit									
Tube City, Inc	TV 089-7648-00174	8/17/2006	--	--	--	--	--	--	--
8(a) Addition of tanks. No change in limited throughput. No change to source PTE.									
AKJ Industries, Inc	AA 089-27452-00505	2/23/2009	--	--	--	--	--	--	--
8(b) Part 70 Operating permit									
AKJ Industries, Inc	TV 089-22772-00505	5/24/2007	--	--	--	--	--	1.2	--
9(a) Aggregated with TV emissions. No change in source PTE									
J.L. Smith Services	SPM 089-28415-00509	12/10/2009	--	--	--	--	--	--	--
9(b) Part 70 Operating permit									
J.L. Smith Services	TV 089-23525-00509	12/15/2006	22.9	11.3	11.3	1.56	23.8	1.96	5.12
10(a) Revocation									
U.S. Aggregates, Inc.	089-29019-05256	3/9/2010	--	--	--	--	--	--	--
10(b) Updating Local County Agency descriptive information									
U.S. Aggregates, Inc.	AA 089-27839-05256	5/4/2009	--	--	--	--	--	--	--
11(c) Initial Part 70 Operating Permit									
U.S. Aggregates, Inc.	TV 089-21828-05256	11/14/2006	--	--	--	--	--	--	--
12(a) Part 70 Operating permit - Determination that Brandenburg is no longer one source with USS Gary									
Brandenburg	TV 089-25094-00176	1/6/2008							
12(b) Increase in VOC emissions from paint booth									
Brandenburg	SPM 089-23501-00176	1/8/2007	--	--	--	--	--	2	--
12(c) Initial Part 70 Operating permit									
Brandenburg	TV 089-19781-00176	3/1/2005	--	--	--	--	--	2.5	--
13(a) Relocation to USS Gary									
Heritage Slag	089-25938-05250	2/4/2008	10.1	4.92	4.92	--	--	--	--
13(b) Name Change									
Heritage Slag	089-27990-05250	6/12/2009	--	--	--	--	--	--	--
13(c) Revocation									
Heritage Slag	089-29018-05250	3/11/2010	--	--	--	--	--	--	--
Totals Upon Issuance of SSM No. 089-28848-00121:			92.59	47.49	46.08	11.31	70.41	30.87	113.65
Totals Since Issuance of SSM No. 089-28848-00121:			62.26	40.09	26.17	0.71	54.54	6.74	81.44
Total for Contemporaneous Period:			154.85	87.58	72.25	12.02	124.95	37.61	195.09

This color means the project was added after issuance of the original netting project.

INDIANA DEPARTMENT OF ENVIRONMENTAL MANAGEMENT
We Protect Hoosiers and Our Environment.
100 N. Senate Avenue • Indianapolis, IN 46204
(800) 451-6027 • (317) 232-8603 • www.idem.IN.gov

Michael R. Pence
Governor

Thomas W. Easterly
Commissioner

SENT VIA U.S. MAIL: CONFIRMED DELIVERY AND SIGNATURE REQUESTED

TO: Joseph E. Hanning
U.S. Steel – Gary Works
Penn Liberty Plaza I
1350 Penn Ave., Suite 200
Pittsburgh, PA 15222

DATE: March 20, 2014

FROM: Matt Stuckey, Branch Chief
Permits Branch
Office of Air Quality

SUBJECT: Final Decision
Significant Permit Modification to a Part 70 Operating Permit
089-33651-00121

Enclosed is the final decision and supporting materials for the air permit application referenced above. Please note that this packet contains the original, signed, permit documents.

The final decision is being sent to you because our records indicate that you are the contact person for this application. However, if you are not the appropriate person within your company to receive this document, please forward it to the correct person.

A copy of the final decision and supporting materials has also been sent via standard mail to:
Matthew E. Perkins, General Manager
OAQ Permits Branch Interested Parties List

If you have technical questions regarding the enclosed documents, please contact the Office of Air Quality, Permits Branch at (317) 233-0178, or toll-free at 1-800-451-6027 (ext. 3-0178), and ask to speak to the permit reviewer who prepared the permit. If you think you have received this document in error, please contact Joanne Smiddie-Brush of my staff at 1-800-451-6027 (ext 3-0185), or via e-mail at jbrush@idem.IN.gov.

Final Applicant Cover letter.dot 6/13/2013

INDIANA DEPARTMENT OF ENVIRONMENTAL MANAGEMENT
We Protect Hoosiers and Our Environment.
100 N. Senate Avenue • Indianapolis, IN 46204
(800) 451-6027 • (317) 232-8603 • www.idem.IN.gov

Michael R. Pence
Governor

Thomas W. Easterly
Commissioner

March 20, 2014

TO: Du Bois Public Library

From: Matthew Stuckey, Branch Chief
Permits Branch
Office of Air Quality

Subject: **Important Information for Display Regarding a Final Determination**

Applicant Name: U.S. Steel – Gary Works
Permit Number: 089-33651-00121

You previously received information to make available to the public during the public comment period of a draft permit. Enclosed is a copy of the final decision and supporting materials for the same project. Please place the enclosed information along with the information you previously received. To ensure that your patrons have ample opportunity to review the enclosed permit, **we ask that you retain this document for at least 60 days.**

The applicant is responsible for placing a copy of the application in your library. If the permit application is not on file, or if you have any questions concerning this public review process, please contact Joanne Smiddie-Brush, OAQ Permits Administration Section at 1-800-451-6027, extension 3-0185.

Enclosures
Final Library.dot 6/13/2013

INDIANA DEPARTMENT OF ENVIRONMENTAL MANAGEMENT
We Protect Hoosiers and Our Environment.
100 N. Senate Avenue • Indianapolis, IN 46204
(800) 451-6027 • (317) 232-8603 • www.idem.IN.gov

Michael R. Pence
Governor

Thomas W. Easterly
Commissioner

TO: Interested Parties / Applicant

DATE: March 20, 2014

RE: U.S. Steel – Gary Works / 089-33651-00121

FROM: Matthew Stuckey, Branch Chief
Permits Branch
Office of Air Quality

In order to conserve paper and reduce postage costs, IDEM's Office of Air Quality is now sending many permit decisions on CDs in Adobe PDF format. The enclosed CD contains information regarding the company named above.

This permit is also available on the IDEM website at:
http://www.in.gov/ai/appfiles/idem-caats/

If you would like to request a paper copy of the permit document, please contact IDEM's central file room at:

Indiana Government Center North, Room 1201
100 North Senate Avenue, MC 50-07
Indianapolis, IN 46204
Phone: 1-800-451-6027 (ext. 4-0965)
Fax (317) 232-8659

Please Note: *If you feel you have received this information in error, or would like to be removed from the Air Permits mailing list, please contact Patricia Pear with the Air Permits Administration Section at 1-800-451-6027, ext. 3-6875 or via e-mail at PPEAR@IDEM.IN.GOV.*

Enclosures
CD Memo.dot 6/13/2013

Mail Code 61-53

IDEM Staff	VHAUN 3/20/2014 US Steel - Gary Works 089-33651-00121 FINAL			AFFIX STAMP HERE IF USED AS CERTIFICATE OF MAILING
Name and address of Sender	▶	Indiana Department of Environmental Management Office of Air Quality – Permits Branch 100 N. Senate Indianapolis, IN 46204	Type of Mail: **CERTIFICATE OF MAILING ONLY**	

Line	Article Number	Name, Address, Street and Post Office Address	Postage	Handing Charges	Act. Value (If Registered)	Insured Value	Due Send if COD	R.R. Fee	S.D. Fee	S.H. Fee	Rest. Del. Fee Remarks
1		Joseph E. Hanning US Steel - Gary Works Penn Liberty Plaza I, 1350 Penn Ave, Suite 200 Pittsburgh PA 15222 (Source CAATS) Confirmed Delivery									
2		Matthew E. Perkins General Manager US Steel - Gary Works One North Broadway, MS 91E-10 Gary IN 46402 *(RO CAATS)*									
3		East Chicago City Council 4525 Indianapolis Blvd East Chicago IN 46312 *(Local Official)*									
4		Gary Mayors Office 401 Broadway # 203 Gary IN 46402 *(Local Official)*									
5		Lake County Health Department-Gary 1145 W. 5th Ave Gary IN 46402-1795 *(Health Department)*									
6		WJOB / WZVN Radio 6405 Olcott Ave Hammond IN 46320 *(Affected Party)*									
7		Shawn Sobocinski 3229 E. Atlanta Court Portage IN 46368 *(Affected Party)*									
8		Mark Coleman 107 Diana Road Portage IN 46368 *(Affected Party)*									
9		Mr. Chris Hernandez Pipefitters Association, Local Union 597 8762 Louisiana St., Suite G Merrillville IN 46410 *(Affected Party)*									
10		Craig Hogarth 7901 West Morris Street Indianapolis IN 46231 *(Affected Party)*									
11		Lake County Commissioners 2293 N. Main St, Building A 3rd Floor Crown Point IN 46307 *(Local Official)*									
12		Northwestern In Regional Planning Com (NIRPC) 6100 Southport Road Portage IN 46368 *(Affected Party)*									
13		Anthony Copeland 2006 E. 140th Street East Chicago IN 46312 (Affected Party)									
14		Barbara G. Perez 506 Lilac Street East Chicago IN 46312 *(Affected Party)*									
15		Mr. Robert Garcia 3733 Parrish Avenue East Chicago IN 46312 *(Affected Party)*									

Total number of pieces Listed by Sender	Total number of Pieces Received at Post Office	Postmaster, Per (Name of Receiving employee)	
14			The full declaration of value is required on all domestic and international registered mail. The maximum indemnity payable for the reconstruction of nonnegotiable documents under Express Mail document reconstructing insurance is $50,000 per piece subject to a limit of $50, 000 per occurrence. The maximum indemnity payable on Express mil merchandise insurance is $500. The maximum indemnity payable is $25,000 for registered mail, sent with optional postal insurance. See ***Domestic Mail Manual*** **R900, S913**, and **S921** for limitations of coverage on inured and COD mail. See ***International Mail Manual*** for limitations o coverage on international mail. Special handling charges apply only to Standard Mail (A) and Standard Mail (B) parcels.

FACSIMILIE OF PS Form 3877

Mail Code 61-53

IDEM Staff	VHAUN 3/20/2014 US Steel - Gary Works 089-33651-00121 FINAL			AFFIX STAMP HERE IF USED AS CERTIFICATE OF MAILING
Name and address of Sender	▶	Indiana Department of Environmental Management Office of Air Quality – Permits Branch 100 N. Senate Indianapolis, IN 46204	Type of Mail: **CERTIFICATE OF MAILING ONLY**	

Line	Article Number	Name, Address, Street and Post Office Address	Postage	Handing Charges	Act. Value (If Registered)	Insured Value	Due Send if COD	R.R. Fee	S.D. Fee	S.H. Fee	Rest. Del. Fee Remarks
1		Karen Kroczek 8212 Madison Ave Munster IN 46321-1627 (Affected Party)									
2		Joseph Hero 11723 S Oakridge Drive St. John IN 46373 *(Affected Party)*									
3		Gary City Council 401 Broadway # 209 Gary IN 46402 *(Local Official)*									
4		Peter Julovich Gary Dept. of Envrionmental Affairs 839 Broadway N206 Gary IN 46402 *(Local Official)*									
5		Mr. Larry Davis 268 South, 600 West Hebron IN 46341 *(Affected Party)*									
6		Dubois Public Library 1835 Broadway Gary IN 46407 *(Library)*									
7		Ryan Dave 939 Cornwallis Munster IN 46321 *(Affected Party)*									
8		Matt Mikus 1710 Vale Park Rd Apt 302 Valparaiso IN 46383 *(Affected Party)*									
9											
10											
11											
12											
13											
14											
15											

Total number of pieces Listed by Sender	Total number of Pieces Received at Post Office	Postmaster, Per (Name of Receiving employee)	The full declaration of value is required on all domestic and international registered mail. The maximum indemnity payable for the reconstruction of nonnegotiable documents under Express Mail document reconstructing insurance is $50,000 per piece subject to a limit of $50, 000 per occurrence. The maximum indemnity payable on Express mil merchandise insurance is $500. The maximum indemnity payable is $25,000 for registered mail, sent with optional postal insurance. See ***Domestic Mail Manual*** **R900, S913**, and **S921** for limitations of coverage on inured and COD mail. See ***International Mail Manual*** for limitations o coverage on international mail. Special handling charges apply only to Standard Mail (A) and Standard Mail (B) parcels.
8			

FACSIMILIE OF PS Form 3877