**INDIANA DEPARTMENT OF ENVIRONMENTAL MANAGEMENT**
*We Protect Hoosiers and Our Environment.*
100 N. Senate Avenue • Indianapolis, IN 46204
(800) 451-6027 • (317) 232-8603 • www.idem.IN.gov

**Michael R. Pence**
*Governor*

**Thomas W. Easterly**
*Commissioner*

TO: Interested Parties / Applicant

DATE: March 5, 2014

RE: Countrymark Refining & Logistics, LLC / 129-33810-00003

FROM: Matthew Stuckey, Branch Chief
Permits Branch
Office of Air Quality

# Notice of Decision: Approval - Effective Immediately

Please be advised that on behalf of the Commissioner of the Department of Environmental Management, I have issued a decision regarding the enclosed matter. Pursuant to IC 13-15-5-3, this permit is effective immediately, unless a petition for stay of effectiveness is filed and granted according to IC 13-15-6-3, and may be revoked or modified in accordance with the provisions of IC 13-15-7-1.

If you wish to challenge this decision, IC 4-21.5-3 and IC 13-15-6-1 require that you file a petition for administrative review. This petition may include a request for stay of effectiveness and must be submitted to the Office of Environmental Adjudication, 100 North Senate Avenue, Government Center North, Suite N 501E, Indianapolis, IN 46204, **within eighteen (18) calendar days of the mailing of this notice**. The filing of a petition for administrative review is complete on the earliest of the following dates that apply to the filing:

(1) the date the document is delivered to the Office of Environmental Adjudication (OEA);
(2) the date of the postmark on the envelope containing the document, if the document is mailed to OEA by U.S. mail; or
(3) The date on which the document is deposited with a private carrier, as shown by receipt issued by the carrier, if the document is sent to the OEA by private carrier.

The petition must include facts demonstrating that you are either the applicant, a person aggrieved or adversely affected by the decision or otherwise entitled to review by law. Please identify the permit, decision, or other order for which you seek review by permit number, name of the applicant, location, date of this notice and all of the following:

(1) the name and address of the person making the request;
(2) the interest of the person making the request;
(3) identification of any persons represented by the person making the request;
(4) the reasons, with particularity, for the request;
(5) the issues, with particularity, proposed for considerations at any hearing; and
(6) identification of the terms and conditions which, in the judgment of the person making the request, would be appropriate in the case in question to satisfy the requirements of the law governing documents of the type issued by the Commissioner.

If you have technical questions regarding the enclosed documents, please contact the Office of Air Quality, Permits Branch at (317) 233-0178. Callers from within Indiana may call toll-free at 1-800-451-6027, ext. 3-0178.

Enclosures
FNPER.dot 6/13/13

INDIANA DEPARTMENT OF ENVIRONMENTAL MANAGEMENT
*We Protect Hoosiers and Our Environment.*
100 N. Senate Avenue • Indianapolis, IN 46204
(800) 451-6027 • (317) 232-8603 • www.idem.IN.gov

**Michael R. Pence**
*Governor*

**Thomas W. Easterly**
*Commissioner*

Mr. Jim Pankey
Countrymark Refining and Logistics, LLC
1200 Refinery Road
Mount Vernon, IN 47620

March 5, 2014

Re: 129-33810-00003
Significant Source Modification to
Part 70 Renewal No.: T129-25424-00003

Dear Mr. Pankey:

Countrymark Refining and Logistics, LLC (formerly known as Countrymark Cooperative, LLP) was issued a Part 70 Operating Permit Renewal No. T129-25424-00003 on July 1, 2010 for a stationary petroleum refinery located at 1200 Refinery Road, Mount Vernon, IN 47620. An application to modify the source was received on October 23, 2013. Pursuant to the provisions of 326 IAC 2-7-10.5, a significant source modification to this permit is hereby approved as described in the attached Technical Support Document.

Pursuant to 326 IAC 2-7-10.5, the following emission units are approved for construction at the source:

(a) One (1) natural gas or refinery gas fired boiler, approved in 2014 for construction, identified as Boiler 5, with a maximum heat input of 118.14 mmBtu/hr, equipped with low NOx burners, and exhausting to stack 132. Under 40 CFR 60, Subpart Db, the Boiler 5 is considered an affected facility. Under 40 CFR 60, Subpart Ja, the Boiler 5 is considered an affected facility. Under 40 CFR 63, Subpart DDDDD, the Boiler 5 is considered an affected facility.

Insignificant Activities

(b) Emergency generators as follows: Diesel generators not exceeding one thousand six hundred (1,600) horsepower.

(1) One (1) diesel fired emergency generator, approved in 2014 for construction, identified as GenB5, with a maximum heat input of 720 hp (500 KW). [40 CFR 60, Subpart IIII] [40 CFR 63, Subpart ZZZZ]

The following construction conditions are applicable to the proposed modification:

General Construction Conditions

1. The data and information supplied with the application shall be considered part of this source modification approval. Prior to any proposed change in construction which may affect the potential to emit (PTE) of the proposed project, the change must be approved by the Office of Air Quality (OAQ).

2. This approval to construct does not relieve the Permittee of the responsibility to comply with the provisions of the Indiana Environmental Management Law (IC 13-11 through 13-20; 13-22 through 13-25; and 13-30), the Air Pollution Control Law (IC 13-17) and the rules promulgated thereunder, as well as other applicable local, state, and federal requirements.

3. Effective Date of the Permit
Pursuant to IC 13-15-5-3, this approval becomes effective upon its issuance.

Commenced Construction
4. Pursuant to 326 IAC 2-1.1-9 and 326 IAC 2-7-10.5(j), the Commissioner may revoke this approval if construction is not commenced within eighteen (18) months after receipt of this approval or if construction is suspended for a continuous period of one (1) year or more.

5. All requirements and conditions of this construction approval shall remain in effect unless modified in a manner consistent with procedures established pursuant to 326 IAC 2.

6. Pursuant to 326 IAC 2-7-10.5(m), the emission units constructed under this approval shall not be placed into operation prior to revision of the source's Part 70 Operating Permit to incorporate the required operation conditions.

Approval to Construct
7. Pursuant to 326 IAC 2-7-10.5(h)(2), this significant source modification authorizes the construction of the new emission unit(s), when the significant source modification has been issued.

Pursuant to 326 IAC 2-7-12, operation of the new emission unit(s) is not approved until the significant permit modification has been issued. Operating conditions are incorporated into the Part 70 operating permit as a significant permit modification in accordance with 326 IAC 2-7-10.5(m)(2) and 326 IAC 2-7-12 (Permit Modification).

A copy of the permit is available on the Internet at: http://www.in.gov/ai/appfiles/idem-caats/. For additional information about air permits and how the public and interested parties can participate, refer to the IDEM's Guide for Citizen Participation and Permit Guide on the Internet at: www.idem.in.gov

This decision is subject to the Indiana Administrative Orders and Procedures Act - IC 4-21.5-3-5.

If you have any questions on this matter, please contact Kristen Willoughby, of my staff, at 317-233-3031 or 1-800-451-6027, and ask for extension 3-3031.

Sincerely,

Jenny Acker, Section Chief
Permits Branch
Office of Air Quality

Attachments: Updated Permit, Technical Support Document and Appendix A

JA/kw

cc: File - Posey County
Posey County Health Department
U.S. EPA, Region V
Compliance and Enforcement Branch
Billing, Licensing and Training Section
IDEM Southwest Regional Office

INDIANA DEPARTMENT OF ENVIRONMENTAL MANAGEMENT
*We Protect Hoosiers and Our Environment.*
100 N. Senate Avenue • Indianapolis, IN 46204
(800) 451-6027 • (317) 232-8603 • www.idem.IN.gov

**Michael R. Pence**
*Governor*

**Thomas W. Easterly**
*Commissioner*

# Significant Source Modification to a Part 70 Source

# OFFICE OF AIR QUALITY

## Countrymark Refining and Logistics, LLC
## 1200 Refinery Road
## Mount Vernon, Indiana 47620

(herein known as the Permittee) is hereby authorized to construct subject to the conditions contained herein, the source described in Section A (Source Summary) of this permit.

This permit is issued in accordance with 326 IAC 2 and 40 CFR Part 70 Appendix A and contains the conditions and provisions specified in 326 IAC 2-7 as required by 42 U.S.C. 7401, et. seq. (Clean Air Act as amended by the 1990 Clean Air Act Amendments), 40 CFR Part 70.6, IC 13-15 and IC 13-17.

| Significant Source Modification No.: 129-33810-00003 | |
|---|---|
| Issued by:<br><br>Jenny Acker, Section Chief<br>Permits Branch<br>Office of Air Quality | Issuance Date:<br><br>March 5, 2014 |

# TABLE OF CONTENTS

**SECTION A SOURCE SUMMARY ..... 8**
A.1 General Information [326 IAC 2-7-4(c)][326 IAC 2-7-5(14)][326 IAC 2-7-1(22)] ..... 8
A.2 Part 70 Source Definition [326 IAC 2-7-1(22)] ..... 8
A.3 Emission Units and Pollution Control Equipment Summary [326 IAC 2-7-4(c)(3)][326 IAC 2-7-5(14)] ..... 8
A.4 Specifically Regulated Insignificant Activities [326 IAC 2-7-1(21)][326 IAC 2-7-4(c)][326 IAC 2-7-5(14)] ..... 19
A.5 Part 70 Permit Applicability [326 IAC 2-7-2] ..... 19

**SECTION B GENERAL CONDITIONS ..... 21**
B.1 Definitions [326 IAC 2-7-1] ..... 21
B.2 Permit Term [326 IAC 2-7-5(2)][326 IAC 2-1.1-9.5][326 IAC 2-7-4(a)(1)(D)][IC 13-15-3-6(a)] ..... 21
B.3 Term of Conditions [326 IAC 2-1.1-9.5] ..... 21
B.4 Enforceability [326 IAC 2-7-7] [IC 13-17-12] ..... 21
B.5 Severability [326 IAC 2-7-5(5)] ..... 21
B.6 Property Rights or Exclusive Privilege [326 IAC 2-7-5(6)(D)] ..... 21
B.7 Duty to Provide Information [326 IAC 2-7-5(6)(E)] ..... 21
B.8 Certification [326 IAC 2-7-4(f)][326 IAC 2-7-6(1)][326 IAC 2-7-5(3)(C)] ..... 22
B.9 Annual Compliance Certification [326 IAC 2-7-6(5)] ..... 22
B.10 Preventive Maintenance Plan [326 IAC 2-7-5(12)][326 IAC 1-6-3] ..... 23
B.11 Emergency Provisions [326 IAC 2-7-16] ..... 24
B.12 Permit Shield [326 IAC 2-7-15][326 IAC 2-7-20][326 IAC 2-7-12] ..... 25
B.13 Prior Permits Superseded [326 IAC 2-1.1-9.5][326 IAC 2-7-10.5] ..... 26
B.14 Termination of Right to Operate [326 IAC 2-7-10][326 IAC 2-7-4(a)] ..... 26
B.15 Permit Modification, Reopening, Revocation and Reissuance, or Termination [326 IAC 2-7-5(6)(C)][326 IAC 2-7-8(a)][326 IAC 2-7-9] ..... 27
B.16 Permit Renewal [326 IAC 2-7-3][326 IAC 2-7-4][326 IAC 2-7-8(e)] ..... 27
B.17 Permit Amendment or Modification [326 IAC 2-7-11][326 IAC 2-7-12] [40 CFR 72] ..... 28
B.18 Permit Revision Under Economic Incentives and Other Programs [326 IAC 2-7-5(8)][326 IAC 2-7-12(b)(2)] ..... 28
B.19 Operational Flexibility [326 IAC 2-7-20][326 IAC 2-7-10.5] ..... 28
B.20 Source Modification Requirement [326 IAC 2-7-10.5] ..... 30
B.21 Inspection and Entry [326 IAC 2-7-6][IC 13-14-2-2][IC 13-30-3-1][IC 13-17-3-2] ..... 30
B.22 Transfer of Ownership or Operational Control [326 IAC 2-7-11] ..... 30
B.23 Annual Fee Payment [326 IAC 2-7-19] [326 IAC 2-7-5(7)][326 IAC 2-1.1-7] ..... 31
B.24 Advanced Source Modification Approval [326 IAC 2-7-5(15)] [326 IAC 2-7-10.5] ..... 31
B.25 Credible Evidence [326 IAC 2-7-5(3)][326 IAC 2-7-6][62 FR 8314] [326 IAC 1-1-6] ..... 31

**SECTION C SOURCE OPERATION CONDITIONS ..... 32**

**Emission Limitations and Standards [326 IAC 2-7-5(1)] ..... 32**
C.1 Particulate Emission Limitations For Processes with Process Weight Rates Less Than One Hundred (100) Pounds per Hour [326 IAC 6-3-2] ..... 32
C.2 Opacity [326 IAC 5-1] ..... 32
C.3 Open Burning [326 IAC 4-1] [IC 13-17-9] ..... 32
C.4 Incineration [326 IAC 4-2] [326 IAC 9-1-2] ..... 32
C.5 Fugitive Dust Emissions [326 IAC 6-4] ..... 32
C.6 Asbestos Abatement Projects [326 IAC 14-10] [326 IAC 18] [40 CFR 61, Subpart M] ..... 32

**Testing Requirements [326 IAC 2-7-6(1)] ..... 34**
C.7 Performance Testing [326 IAC 3-6] ..... 34

**Compliance Requirements [326 IAC 2-1.1-11] ..... 34**
C.8 Compliance Requirements [326 IAC 2-1.1-11] ..... 34

**Compliance Monitoring Requirements [326 IAC 2-7-5(1)][326 IAC 2-7-6(1)] ..... 34**
C.9 Compliance Monitoring [326 IAC 2-7-5(3)][326 IAC 2-7-6(1)] ..... 34
C.10 Instrument Specifications [326 IAC 2-1.1-11] [326 IAC 2-7-5(3)] [326 IAC 2-7-6(1)] ..... 35

**Corrective Actions and Response Steps [326 IAC 2-7-5][326 IAC 2-7-6] ..... 35**
C.11 Emergency Reduction Plans [326 IAC 1-5-2] [326 IAC 1-5-3] ..... 35
C.12 Risk Management Plan [326 IAC 2-7-5(12)] [40 CFR 68] ..... 35
C.13 Response to Excursions or Exceedances [326 IAC 2-7-5] [326 IAC 2-7-6] ..... 35
C.14 Actions Related to Noncompliance Demonstrated by a Stack Test [326 IAC 2-7-5][326 IAC 2-7-6] ..... 36

**Record Keeping and Reporting Requirements [326 IAC 2-7-5(3)] [326 IAC 2-7-19] ..... 36**
C.15 Emission Statement [326 IAC 2-7-5(3)(C)(iii)][326 IAC 2-7-5(7)][326 IAC 2-7-19(c)][326 IAC 2-6] ..... 36
C.16 General Record Keeping Requirements [326 IAC 2-7-5(3)] [326 IAC 2-7-6] [326 IAC 2-2] [326 IAC 2-3] ..... 37
C.17 General Reporting Requirements [326 IAC 2-7-5(3)(C)] [326 IAC 2-1.1-11] [326 IAC 2-2] [326 IAC 2-3] ..... 38

**Stratospheric Ozone Protection ..... 40**
C.18 Compliance with 40 CFR 82 and 326 IAC 22-1 ..... 40
C.19 Consent Decree (Civil No. 3:13-CV-00030-RLY-WGH) Definitions ..... 40
C.20 Consent Decree (Civil No. 3:13-CV-00030-RLY-WGH) Force Majeure ..... 43

**SECTION D.1 EMISSIONS UNIT OPERATION CONDITIONS ..... 45**

**Emission Limitations and Standards [326 IAC 2-7-5(1)] ..... 45**
D.1.1 Preventive Maintenance Plan [326 IAC 2-7-5(12)] ..... 45

**SECTION D.2 FACILITY OPERATION CONDITIONS ..... 46**

**Emission Limitations and Standards [326 IAC 2-7-5(1)] ..... 47**
D.2.1 Particulate Matter (PM) [326 IAC 6-2-4] ..... 47
D.2.2 Standards of Performance for Petroleum Refineries [326 IAC 12] [40 CFR 60, Subpart J] [326 IAC 2-7-10.5] ..... 48
D.2.3 Standards of Peformance for Petroleum Refineries [326 IAC 12] [40 CFR 60, Subpart Ja] [326 IAC 2-7-10.5] ..... 48
D.2.4 Consent Decree (Civil No. 3:13-CV-00030-RLY-WGH) Requirements [326 IAC 2-7-10.5] 49
D.2.5 Consent Decree Requirements [326 IAC 2-7-10.5] ..... 50
D.2.6 Preventive Maintenance Plan [326 IAC 2-7-5(12)] ..... 50

**Compliance Determination Requirements ..... 50**
D.2.7 Continuous Emissions Monitoring [326 IAC 3-5] [326 IAC 2-7-6(1),(6)] [40 CFR 60, Subpart Ja] ..... 50
D.2.8 Continuous Opacity Monitoring [326 IAC 3-5] [326 IAC 2-7-6(1),(6)] [40 CFR 60, Subpart Ja] ..... 51

**Compliance Monitoring Requirements [326 IAC 2-5.1-3(e)(2)] [ 326 IAC 2-6.1-5(a)(2)] ..... 51**
D.2.9 $NO_X$, $SO_2$, CO and $O_2$ Continuous Emissions Monitoring (CEMS) Equipment Downtime . 51
D.2.10 Maintenance of COMS [326 IAC 2-7-5(3)(A)(iii)] [326 IAC 3-5] ..... 51

**Record Keeping and Reporting Requirements [326 IAC 2-7-5(3)] [326 IAC 2-7-19] ..... 52**
D.2.11 Record Keeping Requirements [326 IAC 2-7-5(3)(A)(iii)] [326 IAC 3-5] ..... 52
D.2.12 Reporting Requirements [326 IAC 2-7-5(3)(A)(iii)] [326 IAC 3-5] ..... 52

**SECTION D.3 FACILITY OPERATION CONDITIONS ..... 54**

**Emission Limitations and Standards [326 IAC 2-7-5(1)] ..... 59**
D.3.1 Volatile Organic Compounds (VOC) [326 IAC 8-4-3] ..... 59
D.3.2 Preventive Maintenance Plan [326 IAC 2-7-5(12)] ..... 60

**Record Keeping and Reporting Requirement [326 IAC 2-7-5(3)] [326 IAC 2-7-19] ..... 60**
D.3.3 Record Keeping Requirements [326 IAC 8-4-3] ..... 60

**SECTION D.4 FACILITY OPERATION CONDITIONS ..... 61**

**Emission Limitations and Standards [326 IAC 2-7-5(1)] ..... 62**
D.4.1 Preventive Maintenance Plan [326 IAC 2-7-5(12)] ..... 62

**SECTION D.5 FACILITY OPERATION CONDITIONS ..... 63**

**Emission Limitations and Standards [326 IAC 2-7-5(1)] ..... 64**
D.5.1 NOx Minor Emission Limitation [326 IAC 2-2] ..... 64
D.5.2 Particulate Matter (PM) [326 IAC 6-2-3] ..... 64
D.5.3 Particulate Matter (PM) [326 IAC 6-2-4] ..... 65
D.5.4 Sulfur Dioxide (SO2) [326 IAC 7-1.1-1] [326 IAC 7-2-1] ..... 65
D.5.5 Consent Decree (Civil No. 3:13-CV-00030-RLY-WGH) Requirements ..... 65
D.5.6 Consent Decree Requirements [326 IAC 2-7-10.5] ..... 66
D.5.7 Consent Decree Requirements [326 IAC 2-7-10.5] – Main Flare ..... 67
D.5.8 Standards of Performance for Petroleum Refineries [326 IAC 12] [40 CFR 60, Subpart J] [40 CFR 60, Subpart Ja] [326 IAC 2-7-10.5] ..... 67
D.5.9 Preventive Maintenance Plan [326 IAC 2-7-5(12)] ..... 68

**Compliance Determination Requirements ..... 68**
D.5.10 Sulfur Dioxide Emissions and Sulfur Content ..... 68
D.5.11 NOx Limitation Averaging Time and Monitoring Requirements ..... 68
D.5.12 Continuous Emissions Monitoring [326 IAC 3-5] [326 IAC 2-7-6(1),(6)][40 CFR 60, Subpart Db] ..... 69

**Compliance Monitoring Requirements [326 IAC 2-5.1-3(e)(2)] [ 326 IAC 2-6.1-5(a)(2)] ..... 69**
D.5.13 $NO_x$ Continuous Emissions Monitoring (CEMS) Equipment Downtime ..... 69

**Record Keeping and Reporting Requirement [326 IAC 2-7-5(3)] [326 IAC 2-7-19] ..... 70**
D.5.14 Record Keeping Requirements [326 IAC 2-7-5(3)(A)(iii)][326 IAC 3-5] ..... 70
D.5.15 Reporting Requirements [326 IAC 2-7-5(3)(A)(iii)][326 IAC 3-5] ..... 71

**SECTION D.6 FACILITY OPERATION CONDITIONS ..... 72**

**Emission Limitations and Standards [326 IAC 2-7-5(1)] ..... 72**
D.6.1 Particulate Matter Emission Limitations For Processes with Process Weight Rates Less Than One Hundred (100) pounds per hour [326 IAC 6-3-2(c)] ..... 72

**SECTION E.1 EMISSIONS UNIT OPERATION CONDITIONS ..... 73**

**Emission Limitations and Standards [326 IAC 2-7-5(1)] ..... 73**
E.1.1 General Provisions Relating to NESHAP [326 IAC 20-1-1] [40 CFR Part 63, Subpart A] ..... 73
E.1.2 Gasoline Distribution Facilities NESHAP [326 IAC 20-10-1] [40 CFR 63, Subpart R] ..... 73

**SECTION E.2 FACILITY OPERATION CONDITIONS ..... 74**

**Emission Limitations and Standards [326 IAC 2-7-5(1)] ..... 74**
E.2.1 General Provisions Relating to NESHAP [326 IAC 20-1-1] [40 CFR 63, Subpart A] ..... 74

E.2.2 National Emission Standards for Hazardous Air Pollutants for Petroleum Refineries: Catalytic Cracking Units, Catalytic Reforming Units, and Sulfur Recovery Units [40 CFR Part 63, Subpart UUU] [326 IAC 20-50-1] ..... 74

**SECTION E.3 FACILITY OPERATION CONDITIONS ..... 76**

**Emission Limitations and Standards [326 IAC 2-7-5(1)] ..... 77**
E.3.1 General Provisions Relating to NSPS [326 IAC 12-1-1] [40 CFR 60, Subpart J] ..... 77
E.3.2 Standards of Performance for Petroleum Refineries [40 CFR Part 60, Subpart J] [326 IAC 12] ..... 77

**SECTION E.4 FACILITY OPERATION CONDITIONS ..... 78**

**Emission Limitations and Standards [326 IAC 2-7-5(1)] ..... 78**
E.4.1 General Provisions Relating to NSPS [326 IAC 12-1-1] [40 CFR Part 60, Subpart A] ..... 78
E.4.2 Standards of Performance for Storage Vessels for Petroleum Liquids for Which Construction, Reconstruction, or Modification Commenced After June 11, 1973, and Prior to May 19, 1978 [40 CFR Part 60, Subpart K] [326 IAC 12] ..... 78

**SECTION E.5 FACILITY OPERATION CONDITIONS ..... 79**

**Emission Limitations and Standards [326 IAC 2-7-5(1)] ..... 79**
E.5.1 General Provisions Relating to NSPS [326 IAC 12-1-1] [40 CFR Part 60, Subpart A] ..... 79
E.5.2 Standards of Performance for VOC Storage Vessels (Including Petroleum Liquid Storage Vessels) for Which Construction, Reconstruction, or Modification Commenced After July 23, 1984 [40 CFR Part 60, Subpart Kb] [326 IAC 12] ..... 79

**SECTION E.6 FACILITY OPERATION CONDITIONS ..... 80**

**Emission Limitations and Standards [326 IAC 2-7-5(1)] ..... 81**
E.6.1 General Provisions Relating to NSPS [326 IAC 12-1-1] [40 CFR Part 60, Subpart A] ..... 81
E.6.2 Standards of Performance for Equipment Leaks of VOC in Petroleum Refineries for which Construction, Reconstruction, or Modification Commenced After January 4, 1983, and on or Before November 7, 2006 [40 CFR Part 60, Subpart GGG] [326 IAC 12-1-1] ..... 81

**SECTION E.7 FACILITY OPERATION CONDITIONS ..... 82**

**Emission Limitations and Standards [326 IAC 2-7-5(1)] ..... 82**
E.7.1 General Provisions Relating to NSPS [326 IAC 12-1-1] [40 CFR Part 60, Subpart A] ..... 82
E.7.2 Standards of Performance for VOC Emissions from Petroleum Refinery Wastewater Systems [326 IAC 12-1-1][40 CFR Part 60, Subpart QQQ] ..... 82

**SECTION E.8 FACILITY OPERATION CONDITIONS ..... 83**

**Emission Limitations and Standards [326 IAC 2-7-5(1)] ..... 83**
E.8.1 General Provisions Relating to NESHAP [326 IAC 20-1-1] [40 CFR Part 63, Subpart A] ... 83
E.8.2 National Emission Standards for Hazardous Air Pollutants From Petroleum Refineries [326 IAC 20-16-1] [40 CFR Part 63, Subpart CC] ..... 83

**SECTION E.9 FACILITY OPERATION CONDITIONS ..... 84**

**Emission Limitations and Standards [326 IAC 2-7-5(1)] ..... 84**
E.9.1 General Provisions Relating to NSPS [326 IAC 12-1] [40 CFR 60, Subpart A] ..... 84
E.9.2 Standards of Performance for Small Industrial-Commercial-Institutional Steam Generating Units [40 CFR Part 60, Subpart Dc] ..... 84

**SECTION E.10 FACILITY OPERATION CONDITIONS ..... 85**

**Emission Limitations and Standards [326 IAC 2-7-5(1)] ..... 85**
E.10.1 General Provisions Relating to NESHAP Subpart FF [40 CFR Part 61, Subpart A] ..... 85
E.10.2 Benzene Waste Operations NESHAP [40 CFR Part 61, Subpart FF] ..... 85

**SECTION E.11 FACILITY OPERATION CONDITIONS ..... 86**

**Emission Limitations and Standards [326 IAC 2-7-5(1)] ..... 86**
E.11.1 General Provisions Relating to NSPS Subpart GGGa [40 CFR Part 60, Subpart A] ..... 86
E.11.2 Standards of Performance for Equipment Leaks of VOC in Petroleum Refineries for Which Construction, Reconstruction, or Modification Commenced After November 7, 2006 NSPS [40 CFR Part 60, Subpart GGGa] ..... 86

**SECTION E.12 FACILITY OPERATION CONDITIONS ..... 87**

**Emission Limitations and Standards [326 IAC 2-7-5(1)] ..... 87**
E.12.1 General Provisions Relating to NSPS Subpart Ja [40 CFR Part 60, Subpart A] ..... 87
E.12.2 Standards of Performance for Petroleum Refineries for Which Construction, Reconstruction, or Modification Commenced After May 14, 2007 NSPS [40 CFR Part 60, Subpart Ja] ..... 87

**SECTION E.13 FACILITY OPERATION CONDITIONS ..... 88**

**Emission Limitations and Standards [326 IAC 2-7-5(1)] ..... 88**
E.13.1 General Provisions Relating to NSPS [326 IAC 12-1-1] [40 CFR Part 60, Subpart A] ..... 88
E.13.2 Standards of Performance for Industrial-Commercial-Institutional Steam Generating Units [40 CFR Part 60, Subpart Db] [326 IAC 12-1-1] ..... 88

**SECTION E.14 FACILITY OPERATION CONDITIONS ..... 89**

**Emission Limitations and Standards [326 IAC 2-7-5(1)] ..... 89**
E.14.1 General Provisions Relating to NSPS [326 IAC 12-1-1] [40 CFR Part 60, Subpart A] ..... 89
E.14.2 Standards of Performance for Sationary Compression Ignition Internal Combustion Engines [40 CFR Part 60, Subpart IIII] [326 IAC 12-1-1] ..... 89

**SECTION E.15 FACILITY OPERATION CONDITIONS ..... 90**

**Emission Limitations and Standards [326 IAC 2-7-5(1)] ..... 90**
E.15.1 General Provisions Relating to NESHAP [326 IAC 20-1-1] [40 CFR 63, Subpart A] ..... 90
E.15.2 National Emission Standards for Hazardous Air Pollutants for Stationary Reciprocating Internal Combustion Engines [40 CFR Part 63, Subpart ZZZZ] [326 IAC 20-82] ..... 90

**SECTION E.16 FACILITY OPERATION CONDITIONS ..... 92**

**Emission Limitations and Standards [326 IAC 2-7-5(1)] ..... 94**
E.16.1 General Provisions Relating to NESHAP [326 IAC 20-1-1] [40 CFR 63, Subpart A] ..... 94
E.16.2 National Emission Standards for Hazardous Air Pollutants for Major Sources: Industrial, Commercial, and Institutional Boilers and Process Heaters [40 CFR Part 63, Subpart DDDDD] [326 IAC 20-95] ..... 94
CERTIFICATION ..... 96
EMERGENCY OCCURRENCE REPORT ..... 97
Part 70 Quarterly Report ..... 99
QUARTERLY DEVIATION AND COMPLIANCE MONITORING REPORT ..... 100

Attachment A - 40 CFR 63, Subpart R
Attachment B - 40 CFR 63, Subpart UUU

Attachment C - 40 CFR 60, Subpart Kb
Attachment D - 40 CFR 63, Subpart CC
Attachment E - 40 CFR 60, Subpart GGG
Attachment F - 40 CFR 60, Subpart QQQ
Attachment G - 40 CFR 60, Subpart Dc
Attachment H - 40 CFR 60, Subpart J
Attachment I - 40 CFR 60, Subpart K
Attachment J - 40 CFR 60, Subpart GGGa
Attachment K - 40 CFR 61, Subpart FF
Attachment L - 40 CFR 60, Subpart Ja
Attachment M - 40 CFR 60, Subpart Db
Attachment N - 40 CFR 60, Subpart IIII
Attachment O - 40 CFR 63, Subpart ZZZZ
Attachment P - 40 CFR 63, Subpart DDDDD

## SECTION A SOURCE SUMMARY

This permit is based on information requested by the Indiana Department of Environmental Management (IDEM), Office of Air Quality (OAQ). The information describing the source contained in conditions A.1, A.3 through A.4 is descriptive information and does not constitute enforceable conditions. However, the Permittee should be aware that a physical change or a change in the method of operation that may render this descriptive information obsolete or inaccurate may trigger requirements for the Permittee to obtain additional permits or seek modification of this permit pursuant to 326 IAC 2, or change other applicable requirements presented in the permit application.

### A.1 General Information [326 IAC 2-7-4(c)][326 IAC 2-7-5(14)][326 IAC 2-7-1(22)]

The Permittee owns and operates a stationary petroleum refinery.

| | |
|---|---|
| Source Address: | 1200 Refinery Road, Mount Vernon, Indiana 47620 |
| General Source Phone Number: | (812) 838-8133 |
| SIC Code: | 2911 |
| County Location: | Posey |
| Source Location Status: | Attainment for all criteria pollutants |
| Source Status: | Part 70 Operating Permit Program<br>Major Source, under PSD Rules<br>GHGs greater than one hundred thousand (100,000) tons of $CO_2$ equivalent emissions ($CO_2e$)<br>Major Source, Section 112 of the Clean Air Act<br>1 of 28 Source Categories |

### A.2 Part 70 Source Definition [326 IAC 2-7-1(22)]

This source definition for this source is incorporated into this permit as follows:

This marine vessel loading and unloading river dock terminal consists of two (2) plants:

(a) Plant 1, the refinery, is located at 1200 Refinery Road, Mount Vernon, IN 47620; and

(b) Plant 2, the river dock terminal, is located at South Mann St. and West Ohio St., Mount Vernon, IN 47620.

On November 24, 2003, in Significant Permit Modification (129-17940-00003), a source determination concluded that Plant 1 (the refinery) and Plant 2 (the river dock terminal) are under the common control of Countrymark Cooperative, LLP and will be considered one source. These two plants are considered one source because they are located on adjacent properties, are under common ownership, and belong to the same industrial grouping. Therefore, the term “source” in the Part 70 documents refers to both Plant 1 and Plant 2 as one source.

Separate Part 70 renewal permits are being issued to Countrymark Cooperative, LLP, solely for administrative purposes:

(a) Plant 1, 129-00003: T129-25424-00003

(b) Plant 2, 129-00037: T129-25574-00037

### A.3 Emission Units and Pollution Control Equipment Summary [326 IAC 2-7-4(c)(3)][326 IAC 2-7-5(14)]

This stationary source consists of the following emission units and pollution control devices:

(a) One (1) Truck loading rack, with a maximum capacity of 60,000 gallons of submerged loading of gasoline, kerosene or distillate oil per hour, installed in 1958, identified as Loading Rack, and exhausting to stack 65; controlled by the Loading Rack Flare,

equipped with a 0.09 million British Thermal Units per hour (mmBtu/hr) natural gas fired pilot and designed to handle 160 actual cubic feet per minute (acfm) of hydrocarbon vapors, installed in 1998, and exhausting to stack 1D. Under 40 CFR 63, Subpart R, this facility is considered an existing bulk gasoline terminal.

(b) One (1) Fluid Catalytic Cracking Unit (FCCU) Raw Oil Pre-heater, identified as 500-H101 with a maximum heat input rate of 18.1 million British Thermal Units per hour (mmBtu/hr), combusting refinery fuel gas only (no sour water stripper overhead off-gas combustion), installed in 1945 and exhausting to stack 9. Under 40 CFR 63, Subpart DDDDD the Fluid Catalytic Cracking Unit (FCCU) Raw Oil Pre-heater is considered an affected facility.

(c) One (1) FCCU regenerator, identified as 500V-5 with an average throughput rate of 380 barrels fresh feed per hour, installed in 1950, controlled by a cyclone and exhausting to stack 10. Under 40 CFR 63, Subpart UUU, process vents on the FCCU are considered affected sources at a petroleum refinery. Under 40 CFR 60, Subpart J, the 500V-5 is considered an affected facility by the Consent Decree as of "Date of Entry" for $SO_2$ and CO.

(d) The following storage vessels:

| Tank ID | Tank Description | Max. Capacity (gallons) | Max. Withdrawal Rate (gal/hr) | Material Stored | Construction Date | NSPS and NESHAP applicability | Stack ID |
|---|---|---|---|---|---|---|---|
| 1 | fixed roof cone tank | 404,418 | 168,000 | hydrocarbon with vapor pressure no higher than the vapor pressure of jet naphtha, | 1940 | - | 075; |
| 2 | fixed roof cone tank | 404,502 | 168,000 | hydrocarbon with vapor pressure no higher than the vapor pressure of jet naphtha, | 1940 | - | 076; |
| 3 | fixed roof cone tank | 404,334 | 168,000 | hydrocarbon with vapor pressure no higher than the vapor pressure of jet naphtha, | 1940 | - | 077; |
| 4 | fixed roof cone tank | 118,272 | 168,000 | hydrocarbon with vapor pressure no higher than the vapor pressure of jet naphtha, | 1940 | - | 018; |
| 5 | fixed roof cone tank | 120,456 | 168,000 | hydrocarbon with vapor pressure no higher than the vapor pressure of jet naphtha, | 1940 | - | 019; |
| 6 | fixed roof cone tank | 120,456 | 168,000 | hydrocarbon with vapor pressure no higher than the vapor pressure of jet naphtha, | 1940 | - | 020; |
| 7 | fixed roof cone tank | 126,000 | 168,000 | hydrocarbon with vapor pressure no higher than the vapor pressure of jet naphtha, | 1940 | - | 078; |

| Tank ID | Tank Description | Max. Capacity (gallons) | Max. Withdrawal Rate (gal/hr) | Material Stored | Construction Date | NSPS and NESHAP applicability | Stack ID |
|---|---|---|---|---|---|---|---|
| 8 | fixed roof cone tank | 126,000 | 168,000 | hydrocarbon with vapor pressure no higher than the vapor pressure of jet naphtha, | 1940 | - | 079; |
| 9 | fixed roof cone tank | 204,204 | 168,000 | hydrocarbon with vapor pressure no higher than the vapor pressure of jet naphtha, | 1940 | - | 023; |
| 10 | fixed roof cone tank | 121,590 | 168,000 | hydrocarbon with vapor pressure no higher than the vapor pressure of jet naphtha, | 1940 | - | 024; |
| 11A | fixed roof cone tank | 8,820 | 168,000 | oil water / mixture | 1972 | - | 080; |
| 11B | fixed roof cone tank | 8,820 | 168,000 | oil water / mixture | 1972 | - | 081; |
| 12 | fixed roof cone tank | 6,090 | 168,000 | hydrocarbon with vapor pressure no higher than the vapor pressure of jet naphtha, | 1988 | - | 082; |
| 15 | fixed roof cone tank | 24,654 | 168,000 | hydrocarbon with vapor pressure no higher than the vapor pressure of jet naphtha, | 1941 | - | 083; |
| 17 | fixed roof cone tank | 997,584 | 168,000 | hydrocarbon with vapor pressure no higher than the vapor pressure of jet naphtha, | 1941 | - | 030; |
| 18 | internal floating roof tank/mechanical primary seal | 1,052,013 | 336,000 | hydrocarbon with vapor pressure equal to or less than the vapor pressure of 13 RVP gasoline, | 2003 | 40 CFR Part 60, Subpart Kb | 037; |
| 19 | fixed roof cone tank/internal floating roof tank/mechanical primary seal | 616,938 | 336,000 | hydrocarbon with vapor pressure equal to or less than the vapor pressure of 13 RVP gasoline, | 1941 | - | 032; |
| 21 | fixed roof cone tank/internal floating roof tank/mechanical primary seal | 1,002,750 | 336,000 | hydrocarbon with vapor pressure equal to or less than the vapor pressure of 13 RVP gasoline, | 1941 | - | 034; |
| 22A | fixed roof cone tank | 1,050,000 | 84,000 | hydrocarbon with vapor pressure equal to or less than the vapor pressure No. 2 fuel oil | 2003 | 40 CFR 63, Subpart CC | 120; |
| 22B | fixed roof cone tank/insulated/ heated cone tank | 1,050,000 | 16,800 | Residual Fuel Oil (No.6) or Petroleum Material with a vapor pressure equivalent to or less than No.2 distillate, | 2006 | - | 127; |

| Tank ID | Tank Description | Max. Capacity (gallons) | Max. Withdrawal Rate (gal/hr) | Material Stored | Construction Date | NSPS and NESHAP applicability | Stack ID |
|---|---|---|---|---|---|---|---|
| 24 | fixed roof cone tank/internal floating roof tank/mechanical primary seal | 588,714 | 336,000 | hydrocarbon with vapor pressure equal to or less than the vapor pressure of 13 RVP gasoline, | 1985 | 40 CFR Part 60, Subpart Kb | 037; |
| 25 | fixed roof cone tank/internal floating roof tank/mechanical primary seal | 656,614 | 336,000 | hydrocarbon with vapor pressure equal to or less than the vapor pressure of 13 RVP gasoline, | 1941 | - | 038; |
| 26 | fixed roof cone tank/internal floating roof tank/mechanical primary seal | 1,006,068 | 336,000 | hydrocarbon with vapor pressure equal to or less than the vapor pressure of 13 RVP gasoline, | 1941 | - | 039; |
| 33 | fixed roof cone tank | 2,262,960 | 168,000 | hydrocarbon with vapor pressure no higher than the vapor pressure of jet naphtha, | 1946 | - | 085; |
| 34 | fixed roof cone tank | 984,480 | 168,000 | hydrocarbon with vapor pressure no higher than the vapor pressure of jet naphtha, | 1946 | - | 045; |
| 35 | fixed roof cone tank/internal floating roof tank/mechanical primary seal | 997,962 | 336,000 | hydrocarbon with vapor pressure equal to or less than the vapor pressure of Distillate, | 1946 | - | 046; |
| 36 | fixed roof cone tank/internal floating roof tank/mechanical primary seal | 2,261,954 | 336,000 | hydrocarbon with vapor pressure equal to or less than the vapor pressure of jet kerosene, | 1946 | - | 047; |
| 37 | fixed roof cone tank | 2,247,126 | 210,000 | hydrocarbon with vapor pressure no higher than the vapor pressure of jet naphtha, | 1946 | - | 048; |
| 38 | fixed roof cone tank | 2,248,386 | 210,000 | hydrocarbon with vapor pressure no higher than the vapor pressure of jet naphtha, | 1948 | - | 049;; |
| 39 | fixed roof cone tank | 2,250,234 | 168,000 | hydrocarbon with vapor pressure no higher than the vapor pressure of jet naphtha, | 1948 | - | 050; |
| 40 | fixed roof cone tank/internal floating roof tank/mechanical primary seal | 2,222,388 | 336,000 | RVP 15 Gasoline, | 1949 | - | 051; |

| Tank ID | Tank Description | Max. Capacity (gallons) | Max. Withdrawal Rate (gal/hr) | Material Stored | Construction Date | NSPS and NESHAP applicability | Stack ID |
|---|---|---|---|---|---|---|---|
| 41 | fixed roof cone tank/internal floating roof tank/mechanical primary seal | 2,204,244 | 336,000 | hydrocarbon with vapor pressure equal to or less than the vapor pressure of 13 RVP gasoline, | 1949 | - | 052; |
| 42 | fixed roof cone tank | 2,261,574 | 168,000 | hydrocarbon with vapor pressure no higher than the vapor pressure of jet naphtha, | 1950 | - | 053; |
| 43 | fixed roof cone tank | 2,254,098 | 168,000 | hydrocarbon with vapor pressure no higher than the vapor pressure of jet naphtha, | 1951 | - | 054; |
| 44 | fixed roof cone tank/internal floating roof tank/mechanical primary seal | 2,310,000 | 336,000 | hydrocarbon with vapor pressure equal to or less than the vapor pressure of 13 RVP gasoline, | 1951 | - | 055; |
| 45 | fixed roof cone tank/internal floating roof tank/mechanical primary seal | 2,310,000 | 336,000 | hydrocarbon with vapor pressure equal to or less than the vapor pressure of 13 RVP gasoline, | 1951 | - | 056; |
| 46 | fixed roof cone tank/mechanical primary seal | 3,402,000 | 168,000 | hydrocarbon with vapor pressure equal to or less than the vapor pressure of distillate, | 1955 | - | 057; |
| 47 | fixed roof cone tank/internal floating roof tank/mechanical primary seal | 5,040,000 | 336,000 | hydrocarbon with vapor pressure equal to or less than the vapor pressure of 13 RVP gasoline, | 1976 | 40 CFR Part 60, Subpart K | 058; |
| 48 | fixed roof cone tank/external floating roof tank/ mechanical primary seal | 4,032,000 | 336,000 | hydrocarbon with vapor pressure equal to or less than the vapor pressure of 13 RVP gasoline, | 1958 | - | 059; |
| 49 | fixed roof cone tank/ external floating roof tank/ mechanical primary seal | 4,032,000 | 336,000 | hydrocarbon with vapor pressure equal to or less than the vapor pressure of 13 RVP gasoline, | 1958 | - | 060; |
| 50 | fixed roof cone tank/internal floating roof tank/mechanical primary seal | 3,934,266 | 336,000 | hydrocarbon with vapor pressure equal to or less than the vapor pressure of 13 RVP gasoline, | 1965 | - | 061; |
| 51 | fixed roof cone tank/internal floating roof tank/mechanical primary seal | 3,937,266 | 336,000 | hydrocarbon with vapor pressure equal to or less than the vapor pressure of 13 RVP gasoline, | 1973 | - | 062; |

| Tank ID | Tank Description | Max. Capacity (gallons) | Max. Withdrawal Rate (gal/hr) | Material Stored | Construction Date | NSPS and NESHAP applicability | Stack ID |
|---|---|---|---|---|---|---|---|
| 52 | fixed roof cone tank | 3,935,148 | 336,000 | hydrocarbon with vapor pressure no higher than the vapor pressure of jet naphtha, | 1976 | 40 CFR Part 60, Subpart K | 063; |
| 53 | fixed roof cone tank | 16,926 | 168,000 | Ethanol, | 1985 | - | 086; |
| 54 | fixed roof cone tank | 16,926 | 168,000 | Ethanol, | 1985 | - | 087; |
| 55 | fixed roof cone tank | 11,634 | 168,000 | Ethanol, | 1980 | - | 088; |
| 56 | fixed roof cone tank | 11,634 | 168,000 | Ethanol, | 1980 | - | 089; |
| 58 | fixed roof cone tank | 16,800 | 168,000 | hydrocarbon with vapor pressure equal to or less than the vapor pressure of 13 RVP gasoline, | 1980 | - | 102; |
| 159 | fixed roof cone tank | 16,800 | 168,000 | hydrocarbon with vapor pressure no higher than the vapor pressure of jet naphtha, | 1988 | - | 103; |
| 160 | fixed roof cone tank | 16,800 | 168,000 | hydrocarbon with vapor pressure no higher than the vapor pressure of jet naphtha, | 1994 | - | 104; |
| 161 | fixed roof cone tank | 16,800 | 168,000 | hydrocarbon with vapor pressure no higher than the vapor pressure of jet naphtha, | 1994 | - | 105; |
| 162 | fixed roof cone tank | 16,800 | 168,000 | hydrocarbon with vapor pressure no higher than the vapor pressure of jet naphtha, | 1994 | - | 106; |
| 163 | fixed roof cone tank | 16,800 | 168,000 | hydrocarbon with vapor pressure no higher than the vapor pressure of jet naphtha, | 1983 | - | 107; |
| 164 | fixed roof cone tank | 16,800 | 168,000 | hydrocarbon with vapor pressure no higher than the vapor pressure of jet naphtha, | 1983 | - | 108; |
| 165 | fixed roof cone tank | 16,800 | 168,000 | hydrocarbon with vapor pressure no higher than the vapor pressure of jet naphtha, | 1985 | - | 109; |
| 166 | fixed roof cone tank | 16,800 | 168,000 | hydrocarbon with vapor pressure no higher than the vapor pressure of jet naphtha, | 1985 | - | 110; |

| Tank ID | Tank Description | Max. Capacity (gallons) | Max. Withdrawal Rate (gal/hr) | Material Stored | Construction Date | NSPS and NESHAP applicability | Stack ID |
|---|---|---|---|---|---|---|---|
| 167 | fixed roof cone tank | 16,800 | 168,000 | hydrocarbon with vapor pressure no higher than the vapor pressure of jet naphtha, | 1985 | - | 111; |
| 168 | fixed roof cone tank | 16,800 | 168,000 | hydrocarbon with vapor pressure no higher than the vapor pressure of jet naphtha, | 1988 | - | 112; |
| 169 | fixed roof cone tank | 16,800 | 168,000 | hydrocarbon with vapor pressure equal to or less than the vapor pressure of 13 RVP gasoline, | 1989 | - | 113; |
| 125 | fixed roof cone tank | 157,000 | 6,000 | hydrocarbon with vapor pressure of No.2 fuel oil or less | 2005 | - | 015; |
| 173 | fixed roof cone tank/insulated/ heated cone tank | 1,050,000 | 16,800 | Residual Fuel Oil (No.6) or Petroleum Material with a vapor pressure equivalent to or less than No.2 distillate, | 2006 | - | 128; |
| 174 | fixed roof cone tank/insulated/ heated cone tank | 1,050,000 | 16,800 | Residual Fuel Oil (No.6) or Petroleum Material with a vapor pressure equivalent to or less than No.2 distillate, | 2007 | - | 129 |
| 175 | fixed roof cone tank/internal floating roof tank/liquid mounted primary seal | 2,310,000 | 210,000 | Petroleum with vapor pressure equal to or less than the vapor pressure of 13 RVP gasoline, | 2008 | 40 CFR Part 60, Subpart Kb | 130 |

(e) One (1) Main Refinery Flare, identified as 700-V101 with a maximum heat input rate of 371 mmBtu/hr of refinery fuel gas/process gas (with capacity for a supplementary pilot fuel heat input rate of 3.0 mmBtu/hr), installed in 1945 and replaced in 2006 and exhausting to stack 118;

Under 40 CFR Part 60, Subpart Ja, the Main Refinery Flare is considered an affected facility.

(f) One (1) Crude heater equipped with a Low-NOx burner, identified as 200-H2 with a maximum heat input rate of 131 mmBtu/hr, combusting refinery fuel gas, installed in 1955 and exhausting to stack 1. Under 40 CFR 63, Subpart DDDDD the Crude heater is considered an affected facility.

(g) One (1) Unifiner heater, identified as 400-H5 with a maximum heat input rate of 20 mmBtu/hr, combusting refinery fuel gas, installed in 1959 and exhausting to stack 2. Under 40 CFR 63, Subpart DDDDD the Unifiner heater is considered an affected facility.

(h) One (1) Cycle oil heater, identified as H-H2 with a maximum heat input rate of 10 mmBtu/hr, combusting refinery fuel gas, installed in 1956 and exhausting to stack 3. Under 40 CFR 63, Subpart DDDDD the Cycle oil heater is considered an affected facility.

(i) One (1) Naphtha splitter heater, identified as 900-H1 with a maximum heat input rate of 12.2 mmBtu/hr, combusting refinery fuel gas, installed in 1956 and exhausting to stack 4. Under 40 CFR 63, Subpart DDDDD the Naphtha splitter heater is considered an affected facility.

(j) One (1) Vacuum heater, identified as 200-H4 with a maximum heat input rate of 14.1 mmBtu/hr, combusting refinery fuel gas, installed in 1950, approved to be modified in 2007, and exhausting to stack 5. Under 40 CFR 63, Subpart DDDDD the Vacuum heater is considered an affected facility.

(k) One (1) Old Platformer heater, identified as Naphtha Splitter Reboiler 900-H2 with a maximum heat input rate of 27 mmBtu/hr, combusting refinery fuel gas, installed in 1956 and exhausting to stack 6. Under 40 CFR 63, Subpart DDDDD the Old Platformer heater is considered an affected facility.

(l) One (1) Alkylation unit heater, identified as 100-H1 with a maximum heat input rate of 13.2 mmBtu/hr, combusting refinery fuel gas and No. 6 residual fuel oil, installed in 1966 and exhausting to stack 7. Under 40 CFR 63, Subpart DDDDD the Alkylation unit heater is considered an affected facility.

(m) One (1) Auxiliary crude heater, identified as 200-H1 with a maximum heat input rate of 10.1 mmBtu/hr, combusting refinery fuel gas, installed in 1966 and exhausting to stack 11. Under 40 CFR 63, Subpart DDDDD the Auxiliary crude heater is considered an affected facility.

(n) One (1) Platformer stabilizer reb, identified as 300-H4 with a maximum heat input rate of 5.92 mmBtu/hr, combusting refinery fuel gas, installed in 1956 and exhausting to stack 12. Under 40 CFR 63, Subpart DDDDD the Platformer stabilizer reb is considered an affected facility.

(o) One (1) no. 1 boiler, with a maximum heat input rate of 52 mmBtu/hr of process gas, identified as B1 and exhausting to stack 8. Under 40 CFR 63, Subpart DDDDD the no. 1 boiler is considered an affected facility.

(p) One (1) no. 2 boiler, with a maximum heat input rate of 65 mmBtu/hr of process gas, identified as B2 and exhausting to stack 13. Under 40 CFR 63, Subpart DDDDD the no. 2 boiler is considered an affected facility.

(q) One (1) natural gas or refinery gas fired boiler, approved in 2014 for construction, identified as boiler B5, with a maximum heat input of 118.14 mmBtu/hr, equipped with low NOx burners, and exhausting to stack 132. Under 40 CFR 60, Subpart Db, the boiler B5 is considered an affected facility. Under 40 CFR 60, Subpart Ja, the boiler B5 is considered an affected facility. Under 40 CFR 63, Subpart DDDDD, the boiler B5 is considered an affected facility.

(r) One (1) Vacuum heater husky, identified as 200-H3 with a maximum heat input rate of 6.27 mmBtu/hr, combusting refinery fuel gas, installed in 1963 and exhausting to stack 64. Under 40 CFR 63, Subpart DDDDD the Vacuum heater husky is considered an affected facility.

(s) One (1) CCR Platformer Unit which includes one (1) CCR Platformer Heater, identified as 300 - H1, H2, H3 with a maximum heat input rate of 70.3 mmBtu/hr, combusting refinery fuel gas, installed in 1992 and exhausting to stack 74. Under 40 CFR 63, Subpart UUU, process vents on the CCR are considered affected sources at a petroleum refinery. Under 40 CFR 60, Subpart J, the CCR Platformer Unit, is considered an affected facility. Under 40 CFR 63, Subpart DDDDD, the CCR is considered an affected facility.

(t) Two (2) sets of Oil/water Separators equipped with covers for VOC control, identified as 071. Under 40 CFR 60, Subpart QQQ, new and existing drains are considered affected sources at a petroleum refinery.

(u) one (1) Miscellaneous operation (Sampling, Blowing, Purging, etc.), identified as 073;

(v) Pipeline Valves - Gas, identified as 090. Under 40 CFR 60, Subpart GGG, valves are considered affected sources at a petroleum refinery.

(w) Pipeline Valves - Light Liquid, identified as 091. Under 40 CFR 60, Subpart GGG, valves are considered affected sources at a petroleum refinery.

(x) Pipeline Valves - Heavy Liquid, identified as 092. Under 40 CFR 60, Subpart GGG, valves are considered affected sources at a petroleum refinery.

(y) Pipeline Valves - Hydrogen, identified as 093. Under 40 CFR 60, Subpart GGG, valves are considered affected sources at a petroleum refinery.

(z) Open Ended Valves, identified as 094. Under 40 CFR 60, Subpart GGG, open-ended valves are considered affected sources at a petroleum refinery.

(aa) Flanges, identified as 095. Under 40 CFR 60, Subpart GGG, the flanges are affected considered sources at a petroleum refinery.

(bb) Pump Seals Light Liquid, identified as 096. Under 40 CFR 60, Subpart GGG, equipment associated with the pump is considered an affected source at a petroleum refinery.

(cc) Pump Seals Heavy Liquid, identified as 097. Under 40 CFR 60, Subpart GGG, equipment associated with the pump is considered an affected source at a petroleum refinery.

(dd) Compressor Seals - Gas, identified as 098. Under 40 CFR 60, Subpart GGG, equipment associated with compressor is considered an affected source at a petroleum refinery.

(ee) Compressor Seals - Heavy Liquid, identified as 099. Under 40 CFR 60, Subpart GGG, equipment associated with compressor is considered an affected source at a petroleum refinery.

(ff) Drains, identified as 100.

(gg) Vessel Relief Valves, identified as 101. Under 40 CFR 60, Subpart GGG, pressure relief devices are considered affected sources at a petroleum refinery.

(hh) Cooling Towers, identified as 119; and

(ii) Process units made up of vessels, piping, exchangers, identified as PENEX. Under 40 CFR 60, Subpart GGG, equipment associated with the sampling connection system is considered an affected source at a petroleum refinery.

(jj) One (1) Hydrotreating Unit Reactor charge heater, identified as 210-H-100, with a maximum heat input rating of 19.25 MMBtu per hour, combusting refinery fuel gas as a primary fuel and natural gas as a back up fuel, and exhausting through one (1) stack identified as 122, constructed in 2005. Under 40 CFR 60, Subpart J, the Hydrotreating Unit Reactor charge heater, is considered an affected facility. Under 40 CFR 63, Subpart DDDDD, the Hydrotreating Unit Reactor charge heater is considered an affected facility.

(kk) One (1) Hydrotreating Unit Reboiler Stabilizer, identified as 210-H-101, with a maximum heat input rating of 19.94 MMBtu per hour, combusting refinery fuel gas as a primary fuel and natural gas as a back up fuel, and exhausting through one (1) stack identified as 123 constructed in 2005. Under 40 CFR 60, Subpart J, the Hydrotreating Unit Reboiler Stabilizer, is considered an affected facility. Under 40 CFR 63, Subpart DDDDD, the Hydrotreating Unit Reboiler Stabilizer is considered an affected facility.

(ll) One (1) Tail Gas Treatment System and Sulfur Recovery System identified as 124 and consisting of the following: Under 40 CFR 63, Subpart UUU, these facilities and the associated process vents and bypass lines are considered affected sources at a petroleum refinery. Under 40 CFR 60, Subpart Ja, the Tail Gas Treatment System and Sulfur Recovery System, is considered an affected facility by the Consent Decree as of June 3, 2013.

(1) One (1) Claus Unit Startup burner (SRU Burner 520-H-101), identified as 124-1, with a maximum heat input rating of 1.54 MMBtu per hour, combusting natural gas, and exhausting through one (1) stack identified as 124-1, constructed in 2005. Under 40 CFR 60, Subpart J, the Claus Unit Startup burner, is considered an affected facility. Under 40 CFR 63, Subpart DDDDD, the Claus Unit Startup burner is considered an affected facility.

(2) One (1) Tail Gas Treating Unit (TGTU) Incinerator burner (Claus Furnace 520-H-102), identified as 124-2, with a maximum heat input rating of 1.29 MMBtu per hour, combusting refinery fuel gas as a primary fuel and natural as a back fuel, and exhausting through one (1) stack identified as 124-2, constructed in 2005. In the event of unscheduled shutdown of the CCR unit, the Sulfur Recovery Unit effluent will be routed directly to the TGTU incinerator. Under 40 CFR 60, Subpart J, the Tail Gas Treating Unit (TGTU) Incinerator burner, is considered an affected facility. Under 40 CFR 63, Subpart DDDDD, the Tail Gas Treating Unit (TGTU) Incinerator burner is considered an affected facility.

(3) One (1) Tail Gas Treating Unit (TGTU) Incinerator (520-H-162), identified as 124-3, with a maximum process flow rate of 48,000 dry standard cubic feet per day, and exhausting through one (1) stack identified as 124-3, constructed in 2005.

(4) One (1) Sour Flare (520-H-163), identified as 124-4, with a maximum burner capacity of 0.92 MMBtu per hour, and a maximum process flow rate of 200 standard cubic feet per hour, and exhausting through one (1) stack identified as 124-4, constructed in 2005. Under 40 CFR 60, Subpart J, the Sour Flare, is considered an affected facility by the Consent Decree as of March 31, 2013.

(mm) Fugitive emissions from the Hydrotreater unit, Amine Unit, Sulfur Recovery Unit, Tail Gas Treatment Unit consisting of: Under 40 CFR 60, Subpart GGG, equipment associated with the sampling connection system is considered an affected source at a petroleum refinery. Under 40 CFR 63, Subpart CC, equipment leaks from storage vessels and equipment leaks associated with a bulk gasoline terminal are considered affected sources.

(1) pipeline Valves - Gas, identified as 090;

(2) pipeline Valves - Light Liquid, identified as 091;

(3) pipeline Valves - Heavy Liquid, identified as 092;

(4) pipeline Valves - Hydrogen, identified as 093;

(5) open Ended Valves, identified as 094;

(6) Miscellaneous (Sampling, Blowing, Purging, etc.), identified as 073;

(7) flanges, identified as 095;

(8) pump Seals Light Liquid, identified as 096;

(9) pump Seals Heavy Liquid, identified as 097;

(10) compressor Seals - Gas, identified as 098;

(11) compressor Seals - Heavy Liquid, identified as 099;

(12) drains, identified as 100;

(13) vessel Relief Valves, identified as 101; and

(14) cooling Towers, identified as 119.

(nn) One (1) Vacuum heater, identified as 200-H6, with a maximum heat input rate of 5.49 mmBtu/hr, combusting refinery fuel gas and natural gas as a backup, installed in 2005 and exhausting to stack 126. Under 40 CFR 63, Subpart DDDDD, the Vacuum heater is considered an affected facility.

(oo) One (1) boiler identified as B4, constructed in 2006, with a maximum heat input rate of 84.9 MMBtu/hr of process gas and/or natural gas, identified as B4 and exhausting to stack 131.

Under the Standards of Performance for Small Industrial-Commercial-Institutional Steam Generating Units NSPS (40 CFR 60, Subpart Dc), the boiler identified as boiler B4 above is considered an affected facility.

Under the Standards of Performance for Petroleum Refineries (40 CFR Part 60, Subpart J), the boiler identified as boiler B4 above, is considered an affected facility. Under 40 CFR 63, Subpart DDDDD, the boiler B4 is considered an affected facility.

(pp) One (1) Low Sulfur Gasoline (LSG) Unit consisting of the following equipment:

(1) LSG Reactor Charge Heater, identified as 810-H101, approved for construction in 2008, with a maximum capacity of 5.985 MMBtu, combusting refinery fuel gas only, and venting to stack 128. Under 40 CFR Part 60, Subpart Ja, the LSG Reactor Charge Heater is considered an affected facility. Under 40 CFR 63, Subpart DDDDD, the LSG Reactor Charge Heater is considered an affected facility.

(2) #5 Cooling Tower with a maximum capacity of 3,600 gpm approved for construction in 2008.

(3) LSG Unit components and drains (800 valves, 16 drains, and 5 pumps) approved for construction in 2008.

Under 40 CFR 63, Subpart CC, equipment leaks associated with a petroleum refinery are considered as an affected facility.

Under 40 CFR 60, Subpart QQQ, new and existing drains are considered affected facilities at a petroleum refinery.

Under 40 CFR 60, Subpart GGG, valves are considered affected facilities at a petroleum refinery.

Under 40 CFR 61 Subpart FF new and existing drains are considered affected facilities for benzene waste operations.

## A.4 Specifically Regulated Insignificant Activities [326 IAC 2-7-1(21)][326 IAC 2-7-4(c)][326 IAC 2-7-5(14)]

This stationary source also includes the following insignificant activities which are specifically regulated, as defined in 326 IAC 2-7-1(21):

(a) Metal and related material cutting, fabricating and preparation. [326 IAC 6-3]

(b) Sand blasting or mechanical stripping on tanks and other equipment. [326 IAC 6-3]

(c) Painting on tanks and other equipment. [326 IAC 6-3]

(d) Welding/Cutting of metal for vessel, pipeline and equipment maintenance. [326 IAC 6-3]

(e) Emergency generators as follows: Diesel generators not exceeding one thousand six hundred (1,600) horsepower.

(1) One (1) diesel fired emergency generator, approved in 2014 for construction, identified as GenB5, with a maximum heat input of 720 hp (500 KW). [40 CFR 60, Subpart IIII] [40 CFR 63, Subpart ZZZZ]

(2) One (1) diesel fired emergency generator, installed in 2008, identified as 700-P33 North Pond fire pump, with a maximum heat input of 420 hp (298 KW). [40 CFR 60, Subpart IIII] [40 CFR 63, Subpart ZZZZ]

(3) One (1) diesel fired emergency generator, installed in 2006, identified as 700-C8 Air Compressor, with a maximum heat input of 130 hp (97 KW). [40 CFR 63, Subpart ZZZZ]

(4) One (1) diesel fired emergency generator, installed in 2006, identified as 700-G2 Boilerhouse, with a maximum heat input of 393 hp (293 KW). [40 CFR 63, Subpart ZZZZ]

(5) One (1) diesel fired emergency generator, installed in 1992, identified as 700-P32 No. 2 Fire Pond pump, with a maximum heat input of 302 hp (225 KW). [40 CFR 63, Subpart ZZZZ]

(6) One (1) diesel fired emergency generator, installed in 1984, identified as 1000-P33B, with a maximum heat input of 240 hp (180 KW). [40 CFR 63, Subpart ZZZZ]

(7) One (1) diesel fired emergency generator, installed in 1967, identified as 700-P31 Golf Course pond pump, with a maximum heat input of 130 hp (97 KW). [40 CFR 63, Subpart ZZZZ]

## A.5 Part 70 Permit Applicability [326 IAC 2-7-2]

This stationary source is required to have a Part 70 permit by 326 IAC 2-7-2 (Applicability) because:

(a) It is a major source, as defined in 326 IAC 2-7-1(22);

(b) It is a source in a source category designated by the United States Environmental Protection Agency (U.S. EPA) under 40 CFR 70.3 (Part 70 - Applicability).

## SECTION B GENERAL CONDITIONS

### B.1 Definitions [326 IAC 2-7-1]

Terms in this permit shall have the definition assigned to such terms in the referenced regulation. In the absence of definitions in the referenced regulation, the applicable definitions found in the statutes or regulations (IC 13-11, 326 IAC 1-2 and 326 IAC 2-7) shall prevail.

### B.2 Permit Term [326 IAC 2-7-5(2)][326 IAC 2-1.1-9.5][326 IAC 2-7-4(a)(1)(D)][IC 13-15-3-6(a)]

(a) This permit, T129-25424-00003, is issued for a fixed term of five (5) years from the issuance date of this permit, as determined in accordance with IC 4-21.5-3-5(f) and IC 13-15-5-3. Subsequent revisions, modifications, or amendments of this permit do not affect the expiration date of this permit or of permits issued pursuant to Title IV of the Clean Air Act and 326 IAC 21 (Acid Deposition Control).

(b) If IDEM, OAQ, upon receiving a timely and complete renewal permit application, fails to issue or deny the permit renewal prior to the expiration date of this permit, this existing permit shall not expire and all terms and conditions shall continue in effect, including any permit shield provided in 326 IAC 2-7-15, until the renewal permit has been issued or denied.

### B.3 Term of Conditions [326 IAC 2-1.1-9.5]

Notwithstanding the permit term of a permit to construct, a permit to operate, or a permit modification, any condition established in a permit issued pursuant to a permitting program approved in the state implementation plan shall remain in effect until:

(a) the condition is modified in a subsequent permit action pursuant to Title I of the Clean Air Act; or

(b) the emission unit to which the condition pertains permanently ceases operation.

### B.4 Enforceability [326 IAC 2-7-7] [IC 13-17-12]

Unless otherwise stated, all terms and conditions in this permit, including any provisions designed to limit the source's potential to emit, are enforceable by IDEM, the United States Environmental Protection Agency (U.S. EPA) and by citizens in accordance with the Clean Air Act.

### B.5 Severability [326 IAC 2-7-5(5)]

The provisions of this permit are severable; a determination that any portion of this permit is invalid shall not affect the validity of the remainder of the permit.

### B.6 Property Rights or Exclusive Privilege [326 IAC 2-7-5(6)(D)]

This permit does not convey any property rights of any sort or any exclusive privilege.

### B.7 Duty to Provide Information [326 IAC 2-7-5(6)(E)]

(a) The Permittee shall furnish to IDEM, OAQ, within a reasonable time, any information that IDEM, OAQ may request in writing to determine whether cause exists for modifying, revoking and reissuing, or terminating this permit, or to determine compliance with this permit. Upon request, the Permittee shall also furnish to IDEM, OAQ copies of records required to be kept by this permit.

(b) For information furnished by the Permittee to IDEM, OAQ, the Permittee may include a claim of confidentiality in accordance with 326 IAC 17.1. When furnishing copies of requested records directly to U. S. EPA, the Permittee may assert a claim of confidentiality in accordance with 40 CFR 2, Subpart B.

B.8 Certification [326 IAC 2-7-4(f)][326 IAC 2-7-6(1)][326 IAC 2-7-5(3)(C)]

(a) A certification required by this permit meets the requirements of 326 IAC 2-7-6(1) if:

(1) it contains a certification by a "responsible official" as defined by 326 IAC 2-7-1(35), and

(2) the certification states that, based on information and belief formed after reasonable inquiry, the statements and information in the document are true, accurate, and complete.

(b) The Permittee may use the attached Certification Form, or its equivalent with each submittal requiring certification. One (1) certification may cover multiple forms in one (1) submittal.

(c) A "responsible official" is defined at 326 IAC 2-7-1(35).

B.9 Annual Compliance Certification [326 IAC 2-7-6(5)]

(a) The Permittee shall annually submit a compliance certification report which addresses the status of the source's compliance with the terms and conditions contained in this permit, including emission limitations, standards, or work practices. All certifications shall cover the time period from January 1 to December 31 of the previous year, and shall be submitted no later than July 1 of each year to:

Indiana Department of Environmental Management
Compliance and Enforcement Branch, Office of Air Quality
100 North Senate Avenue
MC 61-53 IGCN 1003
Indianapolis, Indiana 46204-2251

and

United States Environmental Protection Agency, Region V
Air and Radiation Division, Air Enforcement Branch - Indiana (AE-17J)
77 West Jackson Boulevard
Chicago, Illinois 60604-3590

(b) The annual compliance certification report required by this permit shall be considered timely if the date postmarked on the envelope or certified mail receipt, or affixed by the shipper on the private shipping receipt, is on or before the date it is due. If the document is submitted by any other means, it shall be considered timely if received by IDEM, OAQ on or before the date it is due.

(c) The annual compliance certification report shall include the following:

(1) The appropriate identification of each term or condition of this permit that is the basis of the certification;

(2) The compliance status;

(3) Whether compliance was continuous or intermittent;

(4) The methods used for determining the compliance status of the source, currently and over the reporting period consistent with 326 IAC 2-7-5(3); and

(5) Such other facts, as specified in Sections D of this permit, as IDEM, OAQ may require to determine the compliance status of the source.

The submittal by the Permittee does require a certification that meets the requirements of 326 IAC 2-7-6(1) by a "responsible official" as defined by 326 IAC 2-7-1(35).

B.10 Preventive Maintenance Plan [326 IAC 2-7-5(12)][326 IAC 1-6-3]

(a) A Preventive Maintenance Plan meets the requirements of 326 IAC 1-6-3 if it includes, at a minimum:

(1) Identification of the individual(s) responsible for inspecting, maintaining, and repairing emission control devices;

(2) A description of the items or conditions that will be inspected and the inspection schedule for said items or conditions; and

(3) Identification and quantification of the replacement parts that will be maintained in inventory for quick replacement.

The Permittee shall implement the PMPs.

(b) If required by specific condition(s) in Section D of this permit where no PMP was previously required, the Permittee shall prepare and maintain Preventive Maintenance Plans (PMPs) no later than ninety (90) days after issuance of this permit or ninety (90) days after initial start-up, whichever is later, including the following information on each facility:

(1) Identification of the individual(s) responsible for inspecting, maintaining, and repairing emission control devices;

(2) A description of the items or conditions that will be inspected and the inspection schedule for said items or conditions; and

(3) Identification and quantification of the replacement parts that will be maintained in inventory for quick replacement.

If, due to circumstances beyond the Permittee’s control, the PMPs cannot be prepared and maintained within the above time frame, the Permittee may extend the date an additional ninety (90) days provided the Permittee notifies:

Indiana Department of Environmental Management
Compliance and Enforcement Branch, Office of Air Quality
100 North Senate Avenue
MC 61-53 IGCN 1003
Indianapolis, Indiana 46204-2251

The PMP extension notification does not require a certification that meets the requirements of 326 IAC 2-7-6(1) by a "responsible official" as defined by 326 IAC 2-7-1(35).

The Permittee shall implement the PMPs.

(c) A copy of the PMPs shall be submitted to IDEM, OAQ upon request and within a reasonable time, and shall be subject to review and approval by IDEM, OAQ. IDEM, OAQ may require the Permittee to revise its PMPs whenever lack of proper maintenance causes or is the primary contributor to an exceedance of any limitation on emissions. The

PMPs and their submittal do not require a certification that meets the requirements of 326 IAC 2-7-6(1) by a "responsible official" as defined by 326 IAC 2-7-1(35).

(d) To the extent the Permittee is required by 40 CFR Part 60/63 to have an Operation Maintenance, and Monitoring (OMM) Plan for a unit, such Plan is deemed to satisfy the PMP requirements of 326 IAC 1-6-3 for that unit.

B.11 Emergency Provisions [326 IAC 2-7-16]

(a) An emergency, as defined in 326 IAC 2-7-1(12), is not an affirmative defense for an action brought for noncompliance with a federal or state health-based emission limitation.

(b) An emergency, as defined in 326 IAC 2-7-1(12), constitutes an affirmative defense to an action brought for noncompliance with a technology-based emission limitation if the affirmative defense of an emergency is demonstrated through properly signed, contemporaneous operating logs or other relevant evidence that describe the following:

(1) An emergency occurred and the Permittee can, to the extent possible, identify the causes of the emergency;

(2) The permitted facility was at the time being properly operated;

(3) During the period of an emergency, the Permittee took all reasonable steps to minimize levels of emissions that exceeded the emission standards or other requirements in this permit;

(4) For each emergency lasting one (1) hour or more, the Permittee notified IDEM, OAQ or Southwest Regional Office within four (4) daytime business hours after the beginning of the emergency, or after the emergency was discovered or reasonably should have been discovered;

Telephone Number: 1-800-451-6027 (ask for Office of Air Quality, Compliance and Enforcement Branch), or
Telephone Number: 317-233-0178 (ask for Office of Air Quality, Compliance and Enforcement Branch)
Facsimile Number: 317-233-6865
Southwest Regional Office phone: (812) 380-2305; fax: (812) 380-2304.

(5) For each emergency lasting one (1) hour or more, the Permittee submitted the attached Emergency Occurrence Report Form or its equivalent, either by mail or facsimile to:

Indiana Department of Environmental Management
Compliance and Enforcement Branch, Office of Air Quality
100 North Senate Avenue
MC 61-53 IGCN 1003
Indianapolis, Indiana 46204-2251

within two (2) working days of the time when emission limitations were exceeded due to the emergency.

The notice fulfills the requirement of 326 IAC 2-7-5(3)(C)(ii) and must contain the following:

(A) A description of the emergency;

(B) Any steps taken to mitigate the emissions; and

(C) Corrective actions taken.

The notification which shall be submitted by the Permittee does not require a certification that meets the requirements of 326 IAC 2-7-6(1) by a "responsible official" as defined by 326 IAC 2-7-1(35).

(6) The Permittee immediately took all reasonable steps to correct the emergency.

(c) In any enforcement proceeding, the Permittee seeking to establish the occurrence of an emergency has the burden of proof.

(d) This emergency provision supersedes 326 IAC 1-6 (Malfunctions). This permit condition is in addition to any emergency or upset provision contained in any applicable requirement.

(e) The Permittee seeking to establish the occurrence of an emergency shall make records available upon request to ensure that failure to implement a PMP did not cause or contribute to an exceedance of any limitations on emissions. However, IDEM, OAQ may require that the Preventive Maintenance Plans required under 326 IAC 2-7-4(c)(8) be revised in response to an emergency.

(f) Failure to notify IDEM, OAQ by telephone or facsimile of an emergency lasting more than one (1) hour in accordance with (b)(4) and (5) of this condition shall constitute a violation of 326 IAC 2-7 and any other applicable rules.

(g) If the emergency situation causes a deviation from a technology-based limit, the Permittee may continue to operate the affected emitting facilities during the emergency provided the Permittee immediately takes all reasonable steps to correct the emergency and minimize emissions.

B.12 Permit Shield [326 IAC 2-7-15][326 IAC 2-7-20][326 IAC 2-7-12]

(a) Pursuant to 326 IAC 2-7-15, the Permittee has been granted a permit shield. The permit shield provides that compliance with the conditions of this permit shall be deemed compliance with any applicable requirements as of the date of permit issuance, provided that either the applicable requirements are included and specifically identified in this permit or the permit contains an explicit determination or concise summary of a determination that other specifically identified requirements are not applicable. The Indiana statutes from IC 13 and rules from 326 IAC, referenced in conditions in this permit, are those applicable at the time the permit was issued. The issuance or possession of this permit shall not alone constitute a defense against an alleged violation of any law, regulation or standard, except for the requirement to obtain a Part 70 permit under 326 IAC 2-7 or for applicable requirements for which a permit shield has been granted.

This permit shield does not extend to applicable requirements which are promulgated after the date of issuance of this permit unless this permit has been modified to reflect such new requirements.

(b) If, after issuance of this permit, it is determined that the permit is in nonconformance with an applicable requirement that applied to the source on the date of permit issuance, IDEM, OAQ shall immediately take steps to reopen and revise this permit and issue a compliance order to the Permittee to ensure expeditious compliance with the applicable requirement until the permit is reissued. The permit shield shall continue in effect so long as the Permittee is in compliance with the compliance order.

(c) No permit shield shall apply to any permit term or condition that is determined after issuance of this permit to have been based on erroneous information supplied in the permit application. Erroneous information means information that the Permittee knew to be false, or in the exercise of reasonable care should have been known to be false, at the time the information was submitted.

(d) Nothing in 326 IAC 2-7-15 or in this permit shall alter or affect the following:

(1) The provisions of Section 303 of the Clean Air Act (emergency orders), including the authority of the U.S. EPA under Section 303 of the Clean Air Act;

(2) The liability of the Permittee for any violation of applicable requirements prior to or at the time of this permit's issuance;

(3) The applicable requirements of the acid rain program, consistent with Section 408(a) of the Clean Air Act; and

(4) The ability of U.S. EPA to obtain information from the Permittee under Section 114 of the Clean Air Act.

(e) This permit shield is not applicable to any change made under 326 IAC 2-7-20(b)(2) (Sections 502(b)(10) of the Clean Air Act changes) and 326 IAC 2-7-20(c)(2) (trading based on State Implementation Plan (SIP) provisions).

(f) This permit shield is not applicable to modifications eligible for group processing until after IDEM, OAQ, has issued the modifications. [326 IAC 2-7-12(c)(7)]

(g) This permit shield is not applicable to minor Part 70 permit modifications until after IDEM, OAQ, has issued the modification. [326 IAC 2-7-12(b)(8)]

B.13 Prior Permits Superseded [326 IAC 2-1.1-9.5][326 IAC 2-7-10.5]

(a) All terms and conditions of permits established prior to T129-25424-00003 and issued pursuant to permitting programs approved into the state implementation plan have been either:

(1) incorporated as originally stated,

(2) revised under 326 IAC 2-7-10.5, or

(3) deleted under 326 IAC 2-7-10.5.

(b) Provided that all terms and conditions are accurately reflected in this permit, all previous registrations and permits are superseded by this Part 70 operating permit, except for permits issued pursuant to Title IV of the Clean Air Act and 326 IAC 21 (Acid Deposition Control)

B.14 Termination of Right to Operate [326 IAC 2-7-10][326 IAC 2-7-4(a)]

The Permittee's right to operate this source terminates with the expiration of this permit unless a timely and complete renewal application is submitted at least nine (9) months prior to the date of expiration of the source’s existing permit, consistent with 326 IAC 2-7-3 and 326 IAC 2-7-4(a).

B.15 Permit Modification, Reopening, Revocation and Reissuance, or Termination [326 IAC 2-7-5(6)(C)][326 IAC 2-7-8(a)][326 IAC 2-7-9]

(a) This permit may be modified, reopened, revoked and reissued, or terminated for cause. The filing of a request by the Permittee for a Part 70 Operating Permit modification, revocation and reissuance, or termination, or of a notification of planned changes or anticipated noncompliance does not stay any condition of this permit. [326 IAC 2-7-5(6)(C)] The notification by the Permittee does require a certification that meets the requirements of 326 IAC 2-7-6(1) by a "responsible official" as defined by 326 IAC 2-7-1(35).

(b) This permit shall be reopened and revised under any of the circumstances listed in IC 13-15-7-2 or if IDEM, OAQ determines any of the following:

(1) That this permit contains a material mistake.

(2) That inaccurate statements were made in establishing the emissions standards or other terms or conditions.

(3) That this permit must be revised or revoked to assure compliance with an applicable requirement. [326 IAC 2-7-9(a)(3)]

(c) Proceedings by IDEM, OAQ to reopen and revise this permit shall follow the same procedures as apply to initial permit issuance and shall affect only those parts of this permit for which cause to reopen exists. Such reopening and revision shall be made as expeditiously as practicable. [326 IAC 2-7-9(b)]

(d) The reopening and revision of this permit, under 326 IAC 2-7-9(a), shall not be initiated before notice of such intent is provided to the Permittee by IDEM, OAQ at least thirty (30) days in advance of the date this permit is to be reopened, except that IDEM, OAQ may provide a shorter time period in the case of an emergency. [326 IAC 2-7-9(c)]

B.16 Permit Renewal [326 IAC 2-7-3][326 IAC 2-7-4][326 IAC 2-7-8(e)]

(a) The application for renewal shall be submitted using the application form or forms prescribed by IDEM, OAQ and shall include the information specified in 326 IAC 2-7-4. Such information shall be included in the application for each emission unit at this source, except those emission units included on the trivial or insignificant activities list contained in 326 IAC 2-7-1(21) and 326 IAC 2-7-1(42). The renewal application does require a certification that meets the requirements of 326 IAC 2-7-6(1) by a "responsible official" as defined by 326 IAC 2-7-1(35).

Request for renewal shall be submitted to:

Indiana Department of Environmental Management
Permit Administration and Support Section, Office of Air Quality
100 North Senate Avenue
MC 61-53 IGCN 1003
Indianapolis, Indiana 46204-2251

(b) A timely renewal application is one that is:

(1) Submitted at least nine (9) months prior to the date of the expiration of this permit; and

(2) If the date postmarked on the envelope or certified mail receipt, or affixed by the shipper on the private shipping receipt, is on or before the date it is due. If the

document is submitted by any other means, it shall be considered timely if received by IDEM, OAQ on or before the date it is due.

(c) If the Permittee submits a timely and complete application for renewal of this permit, the source's failure to have a permit is not a violation of 326 IAC 2-7 until IDEM, OAQ takes final action on the renewal application, except that this protection shall cease to apply if, subsequent to the completeness determination, the Permittee fails to submit by the deadline specified, pursuant to 326 IAC 2-7-4(a)(2)(D), in writing by IDEM, OAQ any additional information identified as being needed to process the application.

B.17 Permit Amendment or Modification [326 IAC 2-7-11][326 IAC 2-7-12] [40 CFR 72]

(a) Permit amendments and modifications are governed by the requirements of 326 IAC 2-7-11 or 326 IAC 2-7-12 whenever the Permittee seeks to amend or modify this permit.

(b) Pursuant to 326 IAC 2-7-11(b) and 326 IAC 2-7-12(a), administrative Part 70 operating permit amendments and permit modifications for purposes of the acid rain portion of a Part 70 permit shall be governed by regulations promulgated under Title IV of the Clean Air Act. [40 CFR 72]

(c) Any application requesting an amendment or modification of this permit shall be submitted to:

Indiana Department of Environmental Management
Permit Administration and Support Section, Office of Air Quality
100 North Senate Avenue
MC 61-53 IGCN 1003
Indianapolis, Indiana 46204-2251

Any such application does require a certification that meets the requirements of 326 IAC 2-7-6(1) by a "responsible official" as defined by 326 IAC 2-7-1(35).

(d) The Permittee may implement administrative amendment changes addressed in the request for an administrative amendment immediately upon submittal of the request. [326 IAC 2-7-11(c)(3)]

B.18 Permit Revision Under Economic Incentives and Other Programs [326 IAC 2-7-5(8)][326 IAC 2-7-12(b)(2)]

(a) No Part 70 permit revision or notice shall be required under any approved economic incentives, marketable Part 70 permits, emissions trading, and other similar programs or processes for changes that are provided for in a Part 70 permit.

(b) Notwithstanding 326 IAC 2-7-12(b)(1) and 326 IAC 2-7-12(c)(1), minor Part 70 permit modification procedures may be used for Part 70 modifications involving the use of economic incentives, marketable Part 70 permits, emissions trading, and other similar approaches to the extent that such minor Part 70 permit modification procedures are explicitly provided for in the applicable State Implementation Plan (SIP) or in applicable requirements promulgated or approved by the U.S. EPA.

B.19 Operational Flexibility [326 IAC 2-7-20][326 IAC 2-7-10.5]

(a) The Permittee may make any change or changes at the source that are described in 326 IAC 2-7-20(b) or (c) without a prior permit revision, if each of the following conditions is met:

(1) The changes are not modifications under any provision of Title I of the Clean Air Act;

(2) Any preconstruction approval required by 326 IAC 2-7-10.5 has been obtained;

(3) The changes do not result in emissions which exceed the limitations provided in this permit (whether expressed herein as a rate of emissions or in terms of total emissions);

(4) The Permittee notifies the:

Indiana Department of Environmental Management
Permit Administration and Support Section, Office of Air Quality
100 North Senate Avenue
MC 61-53 IGCN 1003
Indianapolis, Indiana 46204-2251

and

United States Environmental Protection Agency, Region V
Air and Radiation Division, Regulation Development Branch - Indiana (AR-18J)
77 West Jackson Boulevard
Chicago, Illinois 60604-3590

in advance of the change by written notification at least ten (10) days in advance of the proposed change. The Permittee shall attach every such notice to the Permittee's copy of this permit; and

(5) The Permittee maintains records on-site, on a rolling five (5) year basis, which document all such changes and emission trades that are subject to 326 IAC 2-7-20(b)(1) and (c)(1). The Permittee shall make such records available, upon reasonable request, for public review.

Such records shall consist of all information required to be submitted to IDEM, OAQ in the notices specified in 326 IAC 2-7-20(b)(1) and (c)(1).

(b) The Permittee may make Section 502(b)(10) of the Clean Air Act changes (this term is defined at 326 IAC 2-7-1(37)) without a permit revision, subject to the constraint of 326 IAC 2-7-20(a). For each such Section 502(b)(10) of the Clean Air Act change, the required written notification shall include the following:

(1) A brief description of the change within the source;

(2) The date on which the change will occur;

(3) Any change in emissions; and

(4) Any permit term or condition that is no longer applicable as a result of the change.

The notification which shall be submitted is not considered an application form, report or compliance certification. Therefore, the notification by the Permittee does not require a certification that meets the requirements of 326 IAC 2-7-6(1) by a "responsible official" as defined by 326 IAC 2-7-1(35).

(c) Emission Trades [326 IAC 2-7-20(c)]
The Permittee may trade emissions increases and decreases at the source, where the applicable SIP provides for such emission trades without requiring a permit revision, subject to the constraints of Section (a) of this condition and those in 326 IAC 2-7-20(c).

(d) Alternative Operating Scenarios [326 IAC 2-7-20(d)]
The Permittee may make changes at the source within the range of alternative operating scenarios that are described in the terms and conditions of this permit in accordance with 326 IAC 2-7-5(9). No prior notification of IDEM, OAQ or U.S. EPA is required.

(e) Backup fuel switches specifically addressed in, and limited under, Section D of this permit shall not be considered alternative operating scenarios. Therefore, the notification requirements of part (a) of this condition do not apply.

(f) This condition does not apply to emission trades of $SO_2$ or $NO_X$ under 326 IAC 21 or 326 IAC 10-4.

B.20 Source Modification Requirement [326 IAC 2-7-10.5]

A modification, construction, or reconstruction is governed by the requirements of 326 IAC 2.

B.21 Inspection and Entry [326 IAC 2-7-6][IC 13-14-2-2][IC 13-30-3-1][IC 13-17-3-2]

Upon presentation of proper identification cards, credentials, and other documents as may be required by law, and subject to the Permittee's right under all applicable laws and regulations to assert that the information collected by the agency is confidential and entitled to be treated as such, the Permittee shall allow IDEM, OAQ, U.S. EPA, or an authorized representative to perform the following:

(a) Enter upon the Permittee's premises where a Part 70 source is located, or emissions related activity is conducted, or where records must be kept under the conditions of this permit;

(b) As authorized by the Clean Air Act, IC 13-14-2-2, IC 13-17-3-2, and IC 13-30-3-1, have access to and copy any records that must be kept under the conditions of this permit;

(c) As authorized by the Clean Air Act, IC 13-14-2-2, IC 13-17-3-2, and IC 13-30-3-1, inspect any facilities, equipment (including monitoring and air pollution control equipment), practices, or operations regulated or required under this permit;

(d) As authorized by the Clean Air Act, IC 13-14-2-2, IC 13-17-3-2, and IC 13-30-3-1, sample or monitor substances or parameters for the purpose of assuring compliance with this permit or applicable requirements; and

(e) As authorized by the Clean Air Act, IC 13-14-2-2, IC 13-17-3-2, and IC 13-30-3-1, utilize any photographic, recording, testing, monitoring, or other equipment for the purpose of assuring compliance with this permit or applicable requirements.

B.22 Transfer of Ownership or Operational Control [326 IAC 2-7-11]

(a) The Permittee must comply with the requirements of 326 IAC 2-7-11 whenever the Permittee seeks to change the ownership or operational control of the source and no other change in the permit is necessary.

(b) Any application requesting a change in the ownership or operational control of the source shall contain a written agreement containing a specific date for transfer of permit responsibility, coverage and liability between the current and new Permittee. The application shall be submitted to:

Indiana Department of Environmental Management
Permit Administration and Support Section, Office of Air Quality
100 North Senate Avenue
MC 61-53 IGCN 1003
Indianapolis, Indiana 46204-2251

Any such application does require a certification that meets the requirements of 326 IAC 2-7-6(1) by a "responsible official" as defined by 326 IAC 2-7-1(35).

(c) The Permittee may implement administrative amendment changes addressed in the request for an administrative amendment immediately upon submittal of the request. [326 IAC 2-7-11(c)(3)]

B.23 Annual Fee Payment [326 IAC 2-7-19] [326 IAC 2-7-5(7)][326 IAC 2-1.1-7]

(a) The Permittee shall pay annual fees to IDEM, OAQ within thirty (30) calendar days of receipt of a billing. Pursuant to 326 IAC 2-7-19(b), if the Permittee does not receive a bill from IDEM, OAQ the applicable fee is due April 1 of each year.

(b) Except as provided in 326 IAC 2-7-19(e), failure to pay may result in administrative enforcement action or revocation of this permit.

(c) The Permittee may call the following telephone numbers: 1-800-451-6027 or 317-233-4230 (ask for OAQ, Billing, Licensing, and Training Section), to determine the appropriate permit fee.

B.24 Advanced Source Modification Approval [326 IAC 2-7-5(15)] [326 IAC 2-7-10.5]

(a) The requirements to obtain a source modification approval under 326 IAC 2-7-10.5 or a permit modification under 326 IAC 2-7-12 are satisfied by this permit for the proposed emission units, control equipment or insignificant activities in Sections A.2 and A.3.

(b) Pursuant to 326 IAC 2-1.1-9 any permit authorizing construction may be revoked if construction of the emission unit has not commenced within eighteen (18) months from the date of issuance of the permit, or if during the construction, work is suspended for a continuous period of one (1) year or more.

B.25 Credible Evidence [326 IAC 2-7-5(3)][326 IAC 2-7-6][62 FR 8314] [326 IAC 1-1-6]

For the purpose of submitting compliance certifications or establishing whether or not the Permittee has violated or is in violation of any condition of this permit, nothing in this permit shall preclude the use, including the exclusive use, of any credible evidence or information relevant to whether the Permittee would have been in compliance with the condition of this permit if the appropriate performance or compliance test or procedure had been performed.

## SECTION C SOURCE OPERATION CONDITIONS

Entire Source

### Emission Limitations and Standards [326 IAC 2-7-5(1)]

C.1 Particulate Emission Limitations For Processes with Process Weight Rates Less Than One Hundred (100) Pounds per Hour [326 IAC 6-3-2]

Pursuant to 326 IAC 6-3-2(e)(2), particulate emissions from any process not exempt under 326 IAC 6-3-1(b) or (c) which has a maximum process weight rate less than 100 pounds per hour and the methods in 326 IAC 6-3-2(b) through (d) do not apply shall not exceed 0.551 pounds per hour.

C.2 Opacity [326 IAC 5-1]

Pursuant to 326 IAC 5-1-2 (Opacity Limitations), except as provided in 326 IAC 5-1-1 (Applicability) and 326 IAC 5-1-3 (Temporary Alternative Opacity Limitations), opacity shall meet the following, unless otherwise stated in this permit:

(a) Opacity shall not exceed an average of forty percent (40%) in any one (1) six (6) minute averaging period as determined in 326 IAC 5-1-4.

(b) Opacity shall not exceed sixty percent (60%) for more than a cumulative total of fifteen (15) minutes (sixty (60) readings as measured according to 40 CFR 60, Appendix A, Method 9 or fifteen (15) one (1) minute nonoverlapping integrated averages for a continuous opacity monitor) in a six (6) hour period.

C.3 Open Burning [326 IAC 4-1] [IC 13-17-9]

The Permittee shall not open burn any material except as provided in 326 IAC 4-1-3, 326 IAC 4-1-4 or 326 IAC 4-1-6. The previous sentence notwithstanding, the Permittee may open burn in accordance with an open burning approval issued by the Commissioner under 326 IAC 4-1-4.1.

C.4 Incineration [326 IAC 4-2] [326 IAC 9-1-2]

The Permittee shall not operate an incinerator except as provided in 326 IAC 4-2 or in this permit. The Permittee shall not operate a refuse incinerator or refuse burning equipment except as provided in 326 IAC 9-1-2 or in this permit.

C.5 Fugitive Dust Emissions [326 IAC 6-4]

The Permittee shall not allow fugitive dust to escape beyond the property line or boundaries of the property, right-of-way, or easement on which the source is located, in a manner that would violate 326 IAC 6-4 (Fugitive Dust Emissions). 326 IAC 6-4-2(4) is not federally enforceable.

C.6 Asbestos Abatement Projects [326 IAC 14-10] [326 IAC 18] [40 CFR 61, Subpart M]

(a) Notification requirements apply to each owner or operator. If the combined amount of regulated asbestos containing material (RACM) to be stripped, removed or disturbed is at least 260 linear feet on pipes or 160 square feet on other facility components, or at least thirty-five (35) cubic feet on all facility components, then the notification requirements of 326 IAC 14-10-3 are mandatory. All demolition projects require notification whether or not asbestos is present.

(b) The Permittee shall ensure that a written notification is sent on a form provided by the Commissioner at least ten (10) working days before asbestos stripping or removal work

or before demolition begins, per 326 IAC 14-10-3, and shall update such notice as necessary, including, but not limited to the following:

(1) When the amount of affected asbestos containing material increases or decreases by at least twenty percent (20%); or

(2) If there is a change in the following:

(A) Asbestos removal or demolition start date;

(B) Removal or demolition contractor; or

(C) Waste disposal site.

(c) The Permittee shall ensure that the notice is postmarked or delivered according to the guidelines set forth in 326 IAC 14-10-3(2).

(d) The notice to be submitted shall include the information enumerated in 326 IAC 14-10-3(3).

All required notifications shall be submitted to:

Indiana Department of Environmental Management
Compliance and Enforcement Branch, Office of Air Quality
100 North Senate Avenue
MC 61-53 IGCN 1003
Indianapolis, Indiana 46204-2251

The notice shall include a signed certification from the owner or operator that the information provided in this notification is correct and that only Indiana licensed workers and project supervisors will be used to implement the asbestos removal project. The notifications do not require a certification that meets the requirements of 326 IAC 2-7-6(1) by a "responsible official" as defined by 326 IAC 2-7-1(35).

(e) Procedures for Asbestos Emission Control
The Permittee shall comply with the applicable emission control procedures in 326 IAC 14-10-4 and 40 CFR 61.145(c). Per 326 IAC 14-10-1, emission control requirements are applicable for any removal or disturbance of RACM greater than three (3) linear feet on pipes or three (3) square feet on any other facility components or a total of at least 0.75 cubic feet on all facility components.

(f) Demolition and Renovation
The Permittee shall thoroughly inspect the affected facility or part of the facility where the demolition or renovation will occur for the presence of asbestos pursuant to 40 CFR 61.145(a).

(g) Indiana Licensed Asbestos Inspector
The Permittee shall comply with 326 IAC 14-10-1(a) that requires the owner or operator, prior to a renovation/demolition, to use an Indiana Licensed Asbestos Inspector to thoroughly inspect the affected portion of the facility for the presence of asbestos. The requirement to use an Indiana Licensed Asbestos inspector is not federally enforceable.

**Testing Requirements [326 IAC 2-7-6(1)]**

C.7 Performance Testing [326 IAC 3-6]

(a) For performance testing required by this permit, a test protocol, except as provided elsewhere in this permit, shall be submitted to:

Indiana Department of Environmental Management
Compliance and Enforcement Branch, Office of Air Quality
100 North Senate Avenue
MC 61-53 IGCN 1003
Indianapolis, Indiana 46204-2251

no later than thirty-five (35) days prior to the intended test date. The protocol submitted by the Permittee does not require a certification that meets the requirements of 326 IAC 2-7-6(1) by a "responsible official" as defined by 326 IAC 2-7-1(35).

(b) The Permittee shall notify IDEM, OAQ of the actual test date at least fourteen (14) days prior to the actual test date. The notification submitted by the Permittee does not require a certification that meets the requirements of 326 IAC 2-7-6(1) by a "responsible official" as defined by 326 IAC 2-7-1(35).

(c) Pursuant to 326 IAC 3-6-4(b), all test reports must be received by IDEM, OAQ not later than forty-five (45) days after the completion of the testing. An extension may be granted by IDEM, OAQ if the Permittee submits to IDEM, OAQ a reasonable written explanation not later than five (5) days prior to the end of the initial forty-five (45) day period.

**Compliance Requirements [326 IAC 2-1.1-11]**

C.8 Compliance Requirements [326 IAC 2-1.1-11]

The commissioner may require stack testing, monitoring, or reporting at any time to assure compliance with all applicable requirements by issuing an order under 326 IAC 2-1.1-11. Any monitoring or testing shall be performed in accordance with 326 IAC 3 or other methods approved by the commissioner or the U. S. EPA.

**Compliance Monitoring Requirements [326 IAC 2-7-5(1)][326 IAC 2-7-6(1)]**

C.9 Compliance Monitoring [326 IAC 2-7-5(3)][326 IAC 2-7-6(1)]

(a) For new units:
Unless otherwise specified in the approval for the new emission unit(s), compliance monitoring for new emission units shall be implemented on and after the date of initial start-up.

(b) For existing units:
Unless otherwise specified in this permit, for all monitoring requirements not already legally required, the Permittee shall be allowed up to ninety (90) days from the date of permit issuance, to begin such monitoring. If, due to circumstances beyond the Permittee's control, any monitoring equipment required by this permit cannot be installed and operated no later than ninety (90) days after permit issuance, the Permittee may extend the compliance schedule related to the equipment for an additional ninety (90) days provided the Permittee notifies:

Indiana Department of Environmental Management
Compliance and Enforcement Branch, Office of Air Quality
100 North Senate Avenue
MC 61-53 IGCN 1003
Indianapolis, Indiana 46204-2251

in writing, prior to the end of the initial ninety (90) day compliance schedule, with full justification of the reasons for the inability to meet this date.

The notification which shall be submitted by the Permittee does require a certification that meets the requirements of 326 IAC 2-7-6(1) by a "responsible official" as defined by 326 IAC 2-7-1(35).

C.10 Instrument Specifications [326 IAC 2-1.1-11] [326 IAC 2-7-5(3)] [326 IAC 2-7-6(1)]

(a) When required by any condition of this permit, an analog instrument used to measure a parameter related to the operation of an air pollution control device shall have a scale such that the expected maximum reading for the normal range shall be no less than twenty percent (20%) of full scale. The analog instrument shall be capable of measuring values outside of the normal range.

(b) The Permittee may request that the IDEM, OAQ approve the use of an instrument that does not meet the above specifications provided the Permittee can demonstrate that an alternative instrument specification will adequately ensure compliance with permit conditions requiring the measurement of the parameters.

**Corrective Actions and Response Steps [326 IAC 2-7-5][326 IAC 2-7-6]**

C.11 Emergency Reduction Plans [326 IAC 1-5-2] [326 IAC 1-5-3]

Pursuant to 326 IAC 1-5-2 (Emergency Reduction Plans; Submission):

(a) The Permittee shall maintain the most recently submitted written emergency reduction plans (ERPs) consistent with safe operating procedures.

(b) Upon direct notification by IDEM, OAQ that a specific air pollution episode level is in effect, the Permittee shall immediately put into effect the actions stipulated in the approved ERP for the appropriate episode level. [326 IAC 1-5-3]

C.12 Risk Management Plan [326 IAC 2-7-5(12)] [40 CFR 68]

If a regulated substance, as defined in 40 CFR 68, is present at a source in more than a threshold quantity, the Permittee must comply with the applicable requirements of 40 CFR 68.

C.13 Response to Excursions or Exceedances [326 IAC 2-7-5] [326 IAC 2-7-6]

Upon detecting an excursion where a response step is required by the D Section or an exceedance of a limitation in this permit:

(a) The Permittee shall take reasonable response steps to restore operation of the emissions unit (including any control device and associated capture system) to its normal or usual manner of operation as expeditiously as practicable in accordance with good air pollution control practices for minimizing excess emissions.

(b) The response shall include minimizing the period of any startup, shutdown or malfunction. The response may include, but is not limited to, the following:

(1) initial inspection and evaluation;

(2) recording that operations returned or are returning to normal without operator action (such as through response by a computerized distribution control system); or

(3) any necessary follow-up actions to return operation to normal or usual manner of operation.

(c) A determination of whether the Permittee has used acceptable procedures in response to an excursion or exceedance will be based on information available, which may include, but is not limited to, the following:

(1) monitoring results;

(2) review of operation and maintenance procedures and records; and/or

(3) inspection of the control device, associated capture system, and the process.

(d) Failure to take reasonable response steps shall be considered a deviation from the permit.

(e) The Permittee shall record the reasonable response steps taken.

C.14 Actions Related to Noncompliance Demonstrated by a Stack Test [326 IAC 2-7-5][326 IAC 2-7-6]

(a) When the results of a stack test performed in conformance with Section C - Performance Testing, of this permit exceed the level specified in any condition of this permit, the Permittee shall submit a description of its response actions to IDEM, OAQ no later than seventy-five (75) days after the date of the test.

(b) A retest to demonstrate compliance shall be performed no later than one hundred eighty (180) days after the date of the test. Should the Permittee demonstrate to IDEM, OAQ that retesting in one hundred eighty (180) days is not practicable, IDEM, OAQ may extend the retesting deadline.

(c) IDEM, OAQ reserves the authority to take any actions allowed under law in response to noncompliant stack tests.

The response action documents submitted pursuant to this condition do require a certification that meets the requirements of 326 IAC 2-7-6(1) by a "responsible official" as defined by 326 IAC 2-7-1(35).

**Record Keeping and Reporting Requirements [326 IAC 2-7-5(3)] [326 IAC 2-7-19]**

C.15 Emission Statement [326 IAC 2-7-5(3)(C)(iii)][326 IAC 2-7-5(7)][326 IAC 2-7-19(c)][326 IAC 2-6]

Pursuant to 326 IAC 2-6-3(a)(1), the Permittee shall submit by July 1 of each year an emission statement covering the previous calendar year. The emission statement shall contain, at a minimum, the information specified in 326 IAC 2-6-4(c) and shall meet the following requirements:

(1) Indicate estimated actual emissions of all pollutants listed in 326 IAC 2-6-4(a);

(2) Indicate estimated actual emissions of regulated pollutants as defined by 326 IAC 2-7-1(33) ("Regulated pollutant, which is used only for purposes of Section 19 of this rule") from the source, for purpose of fee assessment.

The statement must be submitted to:

Indiana Department of Environmental Management
Technical Support and Modeling Section, Office of Air Quality
100 North Senate Avenue
MC 61-50 IGCN 1003
Indianapolis, Indiana 46204-2251

The emission statement does require a certification that meets the requirements of 326 IAC 2-7-6(1) by a "responsible official" as defined by 326 IAC 2-7-1(35).

C.16 General Record Keeping Requirements [326 IAC 2-7-5(3)] [326 IAC 2-7-6] [326 IAC 2-2] [326 IAC 2-3]

(a) Records of all required monitoring data, reports and support information required by this permit shall be retained for a period of at least five (5) years from the date of monitoring sample, measurement, report, or application. These records shall be physically present or electronically accessible at the source location for a minimum of three (3) years. The records may be stored elsewhere for the remaining two (2) years as long as they are available upon request. If the Commissioner makes a request for records to the Permittee, the Permittee shall furnish the records to the Commissioner within a reasonable time. Support information includes the following, where applicable:

(AA) All calibration and maintenance records.
(BB) All original strip chart recordings for continuous monitoring instrumentation.
(CC) Copies of all reports required by the Part 70 permit.

Records of required monitoring information include the following, where applicable:

(AA) The date, place, as defined in this permit, and time of sampling or measurements.
(BB) The dates analyses were performed.
(CC) The company or entity that performed the analyses.
(DD) The analytical techniques or methods used.
(EE) The results of such analyses.
(FF) The operating conditions as existing at the time of sampling or measurement.

These records shall be physically present or electronically accessible at the source location for a minimum of three (3) years. The records may be stored elsewhere for the remaining two (2) years as long as they are available upon request. If the Commissioner makes a request for records to the Permittee, the Permittee shall furnish the records to the Commissioner within a reasonable time.

(b) Unless otherwise specified in this permit, for all record keeping requirements not already legally required, the Permittee shall be allowed up to ninety (90) days from the date of permit issuance or the date of initial start-up, whichever is later, to begin such record keeping.

(c) If there is a reasonable possibility (as defined in 326 IAC 2-2-8 (b)(6)(A), 326 IAC 2-2-8 (b)(6)(B), 326 IAC 2-3-2 (l)(6)(A), and/or 326 IAC 2-3-2 (l)(6)(B)) that a “project” (as defined in 326 IAC 2-2-1(oo) and/or 326 IAC 2-3-1(jj)) at an existing emissions unit, other than projects at a source with a Plantwide Applicability Limitation (PAL), which is not part of a “major modification” (as defined in 326 IAC 2-2-1(dd) and/or 326 IAC 2-3-1(y)) may result in significant emissions increase and the Permittee elects to utilize the “projected actual emissions” (as defined in 326 IAC 2-2-1(pp) and/or 326 IAC 2-3-1(kk)), the Permittee shall comply with following:

(1) Before beginning actual construction of the “project” (as defined in 326 IAC 2-2-1(oo) and/or 326 IAC 2-3-1(jj)) at an existing emissions unit, document and maintain the following records:

(A) A description of the project.

(B) Identification of any emissions unit whose emissions of a regulated new source review pollutant could be affected by the project.

(C) A description of the applicability test used to determine that the project is not a major modification for any regulated NSR pollutant, including:

(i) Baseline actual emissions;

(ii) Projected actual emissions;

(iii) Amount of emissions excluded under section 326 IAC 2-2-1(pp)(2)(A)(iii) and/or 326 IAC 2-3-1 (kk)(2)(A)(iii); and

(iv) An explanation for why the amount was excluded, and any netting calculations, if applicable.

(d) If there is a reasonable possibility (as defined in 326 IAC 2-2-8 (b)(6)(A) and/or 326 IAC 2-3-2 (l)(6)(A)) that a “project” (as defined in 326 IAC 2-2-1(oo) and/or 326 IAC 2-3-1(jj)) at an existing emissions unit, other than projects at a source with a Plantwide Applicability Limitation (PAL), which is not part of a “major modification” (as defined in 326 IAC 2-2-1(dd) and/or 326 IAC 2-3-1(y)) may result in significant emissions increase and the Permittee elects to utilize the “projected actual emissions” (as defined in 326 IAC 2-2-1(pp) and/or 326 IAC 2-3-1(kk)), the Permittee shall comply with following:

(1) Monitor the emissions of any regulated NSR pollutant that could increase as a result of the project and that is emitted by any existing emissions unit identified in (1)(B) above; and

(2) Calculate and maintain a record of the annual emissions, in tons per year on a calendar year basis, for a period of five (5) years following resumption of regular operations after the change, or for a period of ten (10) years following resumption of regular operations after the change if the project increases the design capacity of or the potential to emit that regulated NSR pollutant at the emissions unit.

C.17 General Reporting Requirements [326 IAC 2-7-5(3)(C)] [326 IAC 2-1.1-11] [326 IAC 2-2] [326 IAC 2-3]

(a) The Permittee shall submit the attached Quarterly Deviation and Compliance Monitoring Report or its equivalent. Proper notice submittal under Section B –Emergency Provisions satisfies the reporting requirements of this paragraph. Any deviation from permit requirements, the date(s) of each deviation, the cause of the deviation, and the response steps taken must be reported except that a deviation required to be reported pursuant to an applicable requirement that exists independent of this permit, shall be reported according to the schedule stated in the applicable requirement and does not need to be included in this report. This report shall be submitted not later than thirty (30) days after the end of the reporting period. The Quarterly Deviation and Compliance Monitoring Report shall include a certification that meets the requirements of 326 IAC 2-7-6(1) by a "responsible official" as defined by 326 IAC 2-7-1(35). A deviation is an exceedance of a permit limitation or a failure to comply with a requirement of the permit.

(b) The address for report submittal is:

Indiana Department of Environmental Management
Compliance and Enforcement Branch, Office of Air Quality
100 North Senate Avenue
MC 61-53 IGCN 1003
Indianapolis, Indiana 46204-2251

(c) Unless otherwise specified in this permit, any notice, report, or other submission required by this permit shall be considered timely if the date postmarked on the envelope or certified mail receipt, or affixed by the shipper on the private shipping receipt, is on or before the date it is due. If the document is submitted by any other means, it shall be considered timely if received by IDEM, OAQ on or before the date it is due.

(d) Reporting periods are based on calendar years, unless otherwise specified in this permit. For the purpose of this permit "calendar year" means the twelve (12) month period from January 1 to December 31 inclusive.

(e) If the Permittee is required to comply with the recordkeeping provisions of (d) in Section C - General Record Keeping Requirements for any "project" (as defined in 326 IAC 2-2-1 (oo) and/or 326 IAC 2-3-1 (jj)) at an existing emissions unit, and the project meets the following criteria, then the Permittee shall submit a report to IDEM, OAQ:

(1) The annual emissions, in tons per year, from the project identified in (c)(1) in Section C- General Record Keeping Requirements exceed the baseline actual emissions, as documented and maintained under Section C- General Record Keeping Requirements (c)(1)(C)(i), by a significant amount, as defined in 326 IAC 2-2-1 (ww) and/or 326 IAC 2-3-1 (pp), for that regulated NSR pollutant, and

(2) The emissions differ from the preconstruction projection as documented and maintained under Section C - General Record Keeping Requirements (c)(1)(C)(ii).

(f) The report for project at an existing emissions unit shall be submitted no later than sixty (60) days after the end of the year and contain the following:

(1) The name, address, and telephone number of the major stationary source.

(2) The annual emissions calculated in accordance with (d)(1) and (2) in Section C - General Record Keeping Requirements.

(3) The emissions calculated under the actual-to-projected actual test stated in 326 IAC 2-2-2(d)(3) and/or 326 IAC 2-3-2(c)(3).

(4) Any other information that the Permittee wishes to include in this report such as an explanation as to why the emissions differ from the preconstruction projection.

Reports required in this part shall be submitted to:

Indiana Department of Environmental Management
Compliance and Enforcement Branch, Office of Air Quality
100 North Senate Avenue
MC 61-53 IGCN 1003
Indianapolis, Indiana 46204-2251

(g) The Permittee shall make the information required to be documented and maintained in accordance with (c) in Section C- General Record Keeping Requirements available for

review upon a request for inspection by IDEM, OAQ. The general public may request this information from the IDEM, OAQ under 326 IAC 17.1.

**Stratospheric Ozone Protection**

C.18 Compliance with 40 CFR 82 and 326 IAC 22-1

Pursuant to 40 CFR 82 (Protection of Stratospheric Ozone), Subpart F, except as provided for motor vehicle air conditioners in Subpart B, the Permittee shall comply with applicable standards for recycling and emissions reduction.

C.19 Consent Decree (Civil No. 3:13-CV-00030-RLY-WGH) Definitions

As specified by the Consent Decree entered in Civil No. 3:13-CV-00030-RLY-WGH and pursuant to SSM No. 129-33810-00003, the following definitions shall apply to sections C.19 - Consent Decree (Civil No. 3:13-CV-00030-RLY-WGH) Definitions, C.20 - Consent Decree (Civil No. 3:13-CV-00030-RLY-WGH) Force Majeure, D.2.2 - Standards of Performance for Petroleum Refineries [326 IAC 12] [40 CFR 60, Subpart J] [326 IAC 2-7-10.5], D.2.3 - Standards of Performance for Petroleum Refineries [326 IAC 12] [40 CFR 60, Subpart Ja] [326 IAC 2-7-10.5], D.2.4 - Consent Decree (Civil No. 3:13-CV-00030-RLY-WGH) Requirements [326 IAC 2-7-10.5], D.2.5 - Consent Decree Requirements [326 IAC 2-7-10.5], D.2.7 - Continuous Emissions Monitoring [326 IAC 3-5] [326 IAC 2-7-6(1),(6)] [40 CFR 60, Subpart Ja], D.2.8 - Continuous Opacity Monitoring [326 IAC 3-5] [326 IAC 2-7-6(1),(6)] [40 CFR 60, Subpart Ja], D.5.5 - Consent Decree (Civil No. 3:13-CV-00030-RLY-WGH) Requirements, D.5.6 - Consent Decree Requirements [326 IAC 2-7-10.5], D.5.7- Consent Decree Requirements [326 IAC 2-7-10.5] – Main Flare, D.5.8 - Standards of Performance for Petroleum Refineries [326 IAC 12] [40 CFR 60, Subpart J] [40 CFR 60, Subpart Ja] [326 IAC 2-7-10.5], D.5.11 - NOx Limitation Averaging Time and Monitoring Requirements, D.5.12 - Continuous Emissions Monitoring [326 IAC 3-5] [326 IAC 2-7-6(1),(6)][40 CFR 60, Subpart Db], Section E.3 - 40 CFR Part 60, Subpart J, and E.12 - 40 CFR Part 60, Subpart Ja of the permit:

(a) “7-day rolling average” shall mean the average daily emission rate or concentration during the preceding 7 days. For purposes of clarity, the first day used in a 7-day rolling average compliance period is the first day on which the emissions limit is effective and the first complete 7-day average compliance period is 7 days later (*e.g.*, for a limit effective on January 1, the first day in the period is January 1 and the first complete 7-day period is January 1 through January 7).

(b) “365-day rolling average” shall mean the average daily emission rate or concentration during the preceding 365 days. For purposes of clarity, the first day used in a 365-day rolling average compliance period is the first day on which the emissions limit is effective and the first complete 365-day average compliance period is 365 days later (*e.g.*, for a limit effective on January 1, the first day in the period is January 1 and the first complete 365-day period is January 1 through December 31).

(c) “12-month rolling average” shall mean the sum of the average rate or concentration of the pollutant in question for the most recent complete calendar month and each of the previous 11 calendar months, divided by 12. A new 12-month rolling average shall be calculated for each new complete month. For purposes of clarity, the first month used in a 12-month rolling average compliance period is the first full calendar month in which the emission limits is effective, and the first complete 12-month rolling average compliance period is 12 calendar months later (*e.g.*, for a limit effective on December 31, the first month in the period is January and the first complete 12-month period is January through the following December).

(d) “Calendar Quarter” shall mean any one of the three month periods ending on March 31st, June 30th, September 30th, and December 31st.

(e) "CEMS" shall mean a continuous emissions monitoring system.

(f) "CO" shall mean carbon monoxide.

(g) "Combustion Units" shall mean the heaters and boilers at the Refinery that are listed in Appendix A.

(h) "Consent Decree" or "Decree" or "CD" shall mean the Consent Decree entered in Civil No. 3:13-CV-00030-RLY-WGH, including any and all Appendices attached to the body of the Consent Decree.

(i) "Co-Plaintiff" or "Indiana" shall mean the State of Indiana on behalf of the Indiana Department of Environmental Management.

(j) "CountryMark" shall mean Countrymark Refining and Logistics, LLC, and its successors and assigns.

(k) "Covered Flare" shall mean the Main Flare at the Refinery; the Main Flare is an Elevated, Steam-Assisted Flare utilizing only Upper Steam.

(l) "Current Generation Ultra-Low NOx Burners" shall mean those burners that are designed to achieve a NOx emission rate of 0.020 to 0.040 lb NOx/mmBTU (HHV) when firing natural gas at 3% stack oxygen at full design load without air preheat, even if upon installation actual emissions exceed 0.040 lb NOx/mmBTU (HHV).

(m) "Date of Entry of the Consent Decree" or "Date of Entry" shall mean the date the Consent Decree is entered by the United States District Court for the Southern District of Indiana.

(n) "Date of Lodging of the Consent Decree" or "Date of Lodging" or "DOL" shall mean the date the Consent Decree is filed for lodging with the Clerk of the Court for the United States District Court for the Southern District of Indiana.

(o) "Day" or "Days" as used herein shall mean a calendar day or days.

(p) "EPA" shall mean the United States Environmental Protection Agency and any of its successors departments or agencies.

(q) "FCCU" shall mean the fluidized catalytic cracking unit and its regenerator that CountryMark owns and/or operates at the Mt. Vernon Refinery.

(r) "Flare" shall mean a combustion device that uses an uncontrolled volume of ambient air to burn gases.

(s) "Fuel Oil" shall mean any liquid fossil fuel with a sulfur content of greater than 0.05% by weight.

(t) "IDEM" shall mean the Indiana Department of Environmental Management and any successor departments or agencies of the State of Indiana.

(u) "Malfunction" shall mean, as specified in 40 C.F.R. Part 60.2, "any sudden, infrequent, and not reasonably preventable failure of air pollution control equipment, process equipment, or a process to operate in a normal or usual manner. Failures that are caused in part by poor maintenance or careless operation are not Malfunctions."

(v) "Month":

(1) Whenever the Consent Decree requires compliance "within" or "by no later than" a certain number of "Months" after a specific date or event, the compliance obligation commences on the anniversary of the numerical date of that specific date or event. For example, if compliance is required by no later than six Months after the Effective Date of the Decree, and if the Effective Date of the Decree is December 6, 2012, then the compliance obligation commences on June 6, 2013.

(2) "Month" or "monthly" for any purpose other than that identified in Subparagraph 10.t.i of the Consent Decree entered in Civil No. 3:13-CV-00030-RLY-WGH shall mean calendar month.

(w) "Natural Gas Curtailment" shall mean a restriction imposed by a natural gas supplier limiting CountryMark's ability to obtain or use natural gas.

(x) "Next Generation Ultra-Low NOx Burners" or "Next Generation ULNBs" shall mean those burners that are designed to achieve a NOx emission rate of less than or equal to 0.020 lb NOx/mmBTU (HHV) when firing natural gas at 3% stack oxygen at full design load without air preheat, even if upon installation actual emissions exceed 0.020 lb NOx/mmBTU(HHV).

(y) "NOx" shall mean nitrogen oxides.

(z) "Paragraph" shall mean a portion of the Consent Decree identified by an Arabic numeral.

(aa) "Parties" shall mean the United States, Indiana, and CountryMark.

(bb) "PM" shall mean particulate matter as measured by 40 CFR Part 60, Appendix A, Method 5B or 5F.

(cc) "Refinery" or "Mt. Vernon Refinery" shall mean the Refinery owned and operated by CountryMark in Mt. Vernon, Indiana, which is subject to the requirements of the Consent Decree.

(dd) "Selective Catalytic Reduction" or "SCR" shall mean an air pollution control device consisting of ammonia injection and a catalyst bed to selectively catalyze the reduction of NOx with ammonia to nitrogen and water.

(ee) "Selective Non-Catalytic Reduction" or "SNCR" shall mean an air pollution control device consisting of a reactant injection system using ammonia or urea to selectively reduce NOx to nitrogen and water and may include an enhanced reactant such as hydrogen.

(ff) "Shutdown," as specified in 40 C.F.R. Section 60.2, shall mean the cessation of operation of an affected facility for any purpose.

(gg) "SO2" shall mean sulfur dioxide.

(hh) "Smoke Emissions" shall have the definition set forth in Section 3.5 of Method 22 of 40 C.F.R. Part 60, Appendix A. Smoke Emissions may be documented by either a person certified pursuant to Method 22 or by a video camera.

(ii) "Startup," as specified in 40 C.F.R. Section 60.2, shall mean the setting in operation of an affected facility for any purpose.

(jj) "Sulfur Flare" shall mean the Elevated Flare associated with the Sulfur Recovery Unit at the Refinery that CountryMark designates as 520-H-163.

(kk) "Sulfur Recovery Plant" or "SRP" shall mean a process unit that recovers sulfur from hydrogen sulfide by a vapor phase catalytic reaction of sulfur dioxide and hydrogen sulfide.

(ll) "Sulfur Recovery Unit" or "SRU" shall mean a single component of a Sulfur Recovery Plant, commonly referred to as a Claus train.

(mm) "Tail Gas" shall mean exhaust gas from the Claus trains and the tail gas unit ("TGU") section of the SRP.

(nn) "Tail Gas Unit" or "TGU" shall mean a control system utilizing a technology for reducing emissions of sulfur compounds from a Sulfur Recovery Plant.

(oo) "Torch Oil" shall mean FCCU feedstock or cycle oils that are combusted in the FCC regenerator to assist in starting up or restarting the FCCU, to allow hot standby of the FCCU, or to maintain regenerator heat balance in the FCCU.

(pp) "Upstream Process Units" shall mean all amine contactors, amine regenerators, and sour water strippers at the Refinery, as well as all process units at the Refinery that produce gaseous or aqueous waste streams that are processed at amine contactors, amine scrubbers, or sour water strippers.

(qq) "Visible Emissions" for the flares shall mean five minutes or more of Smoke Emissions during any two consecutive hours. For purposes of Appendix B of the Consent Decree, Visible Emissions may be documented by either a person certified pursuant to Method 22 or by a video camera.

C.20 Consent Decree (Civil No. 3:13-CV-00030-RLY-WGH) Force Majeure

(a) "Force Majeure," for purposes of the Consent Decree, is defined as any event beyond the control of CountryMark, its contractors, or any entity controlled by CountryMark that delays the performance of any obligation under the Consent Decree despite CountryMark's best efforts to fulfill the obligation. The requirement that CountryMark exercise "best efforts to fulfill the obligation" includes using best efforts to anticipate any potential Force Majeure event and best efforts: (a) to address the effects of any such event as it is occurring; and (b) to prevent or minimize any resulting delay after the event has occurred.

(b) "Force Majeure" does not include CountryMark's financial inability to perform any obligation under the Consent Decree. Unanticipated or increased costs or expenses associated with the performance of CountryMark's obligations under the Consent Decree shall not constitute circumstances beyond CountryMark's control nor serve as the basis for an extension of time under this Section XIII of the Consent Decree.

(c) If any event occurs or has occurred that may delay the performance of any obligation under the Consent Decree, whether or not caused by a Force Majeure event, CountryMark shall notify EPA and IDEM in writing not later than fifteen (15) calendar days after the time CountryMark first knew or should have known by the exercise of due diligence that the event might cause a delay. In the written notice, CountryMark shall specifically reference Consent Decree Paragraph 169 of the Consent Decree and shall provide an explanation and description of the reasons for the delay; the anticipated duration of the delay; all actions taken or to be taken to prevent or minimize the delay; a schedule for implementation of any measures to be taken to prevent or mitigate the delay or the effect of the delay; CountryMark's rationale for attributing such delay to a Force Majeure event if it intends to assert such a claim; and a statement as to whether, in the opinion of CountryMark, such event may cause or contribute to an endangerment to

public health, welfare, or the environment. CountryMark shall be deemed to know of any circumstance of which CountryMark, any entity controlled by CountryMark, or CountryMark's contractors knew or should have known. CountryMark shall include with any notice all available documentation supporting the claim that the delay was attributable to a Force Majeure. The written notice required by this condition shall be effective upon the mailing of the same by overnight mail or by certified mail, return receipt requested, to EPA in the manner set forth in Section XI of the Consent Decree (Notices).

(d) Failure by CountryMark to comply with the requirements in Consent Decree Paragraph 169 shall preclude CountryMark from asserting any claim of Force Majeure for the event for the period of time of such failure to comply, and for any additional delay caused by such failure.

(e) If EPA, after consultation with IDEM, agrees that the delay or anticipated delay is attributable to a Force Majeure event, the time for performance of the obligations under the Consent Decree and the corresponding Part 70 permit condition that are affected by the Force Majeure event will be extended by EPA for such time as is necessary to complete those obligations. An extension of the time for performance of the obligations affected by the Force Majeure event shall not, of itself, extend the time for performance of any other obligation. EPA will notify CountryMark in writing of the length of the extension, if any, for performance of the obligations affected by the Force Majeure event.

(f) If EPA, after consultation with IDEM, does not agree that the delay or anticipated delay has been or will be caused by a Force Majeure event, or if the EPA, after consultation with IDEM, and CountryMark fail to agree on the length of the delay attributable to the Force Majeure event, EPA will notify CountryMark of its decision.

(g) If CountryMark elects to invoke the dispute resolution procedures set forth in Consent Decree Section XIV (Dispute Resolution), it shall do so no later than 45 days after receipt of EPA's notice. In any such proceeding, CountryMark shall have the burden of demonstrating by a preponderance of the evidence that the delay or anticipated delay has been or will be caused by a Force Majeure event, that the duration of the delay or the extension sought was or will be warranted under the circumstances, that best efforts were exercised to avoid and mitigate the effects of the delay, and that CountryMark complied with the requirements of Consent Decree Paragraphs 167 and 169. If CountryMark carries this burden, the delay at issue shall be deemed not to be a violation by CountryMark of the affected obligation of this Consent Decree identified to EPA and the Court.

(h) Notwithstanding any other provision of the Consent Decree, the Parties do not intend that CountryMark's serving of a Force Majeure notice or the Parties' inability to reach agreement shall cause the reviewing Court to draw any inferences nor establish any presumptions adverse to any Party.

## SECTION D.1 EMISSIONS UNIT OPERATION CONDITIONS

**Emission Unit Description:**

(a) one (1) Truck loading rack, with a maximum capacity of 60,000 gallons of submerged loading of gasoline, kerosene or distillate oil per hour, installed in 1958, identified as Loading Rack, and exhausting to stack 65; controlled by the Loading Rack Flare, equipped with a 0.09 million British Thermal Units per hour (mmBtu/hr) natural gas fired pilot and designed to handle 160 actual cubic feet per minute (acfm) of hydrocarbon vapors, installed in 1998, and exhausting to stack 1D. Under 40 CFR 63, Subpart R, this facility is considered an existing bulk gasoline terminal.

(The information describing the process contained in this emissions unit description box is descriptive information and does not constitute enforceable conditions.)

**Emission Limitations and Standards [326 IAC 2-7-5(1)]**

D.1.1 Preventive Maintenance Plan [326 IAC 2-7-5(12)]

A Preventive Maintenance Plan is required for the Truck loading rack, identified as Loading Rack and any control devices. Section B - Preventive Maintenance Plan contains the Permittee's obligation with regard to the preventive maintenance plan required by this condition.

## SECTION D.2 FACILITY OPERATION CONDITIONS

**Emission Unit Description:**

(c) One (1) FCCU regenerator, identified as 500V-5 with an average throughput rate of 380 barrels fresh feed per hour, installed in 1950, controlled by a cyclone and exhausting to stack 10; Under 40 CFR 63, Subpart UUU, process vents on the FCCU are considered affected sources at a petroleum refinery. Under 40 CFR 60, Subpart J, the 500V-5 is considered an affected facility by the Consent Decree as of "Date of Entry" for $SO_2$ and CO.

(s) One (1) CCR Platformer Unit which includes one (1) CCR Platformer Heater, identified as 300 - H1, H2, H3 with a maximum heat input rate of 70.3 mmBtu/hr, combusting refinery fuel gas, installed in 1992 and exhausting to stack 74. Under 40 CFR 63, Subpart UUU, process vents on the CCR are considered affected sources at a petroleum refinery. Under 40 CFR 60, Subpart J, the CCR Platformer Unit, is considered an affected facility. Under 40 CFR 63, Subpart DDDDD, the CCR is considered an affected facility.

(jj) One (1) Hydrotreating Unit Reactor charge heater, identified as 210-H-100, with a maximum heat input rating of 19.25 MMBtu per hour, combusting refinery fuel gas as a primary fuel and natural gas as a back up fuel, and exhausting through one (1) stack identified as 122, constructed in 2005. Under 40 CFR 60, Subpart J, the Hydrotreating Unit Reactor charge heater, is considered an affected facility. Under 40 CFR 63, Subpart DDDDD, the Hydrotreating Unit Reactor charge heater is considered an affected facility.

(kk) One (1) Hydrotreating Unit Reboiler Stabilizer, identified as 210-H-101, with a maximum heat input rating of 19.94 MMBtu per hour, combusting refinery fuel gas as a primary fuel and natural gas as a back up fuel, and exhausting through one (1) stack identified as 123 constructed in 2005. Under 40 CFR 60, Subpart J, the Hydrotreating Unit Reboiler Stabilizer, is considered an affected facility. Under 40 CFR 63, Subpart DDDDD, the Hydrotreating Unit Reboiler Stabilizer is considered an affected facility.

(ll) One (1) Tail Gas Treatment System and Sulfur Recovery System identified as 124 and consisting of the following: Under 40 CFR 63, Subpart UUU, these facilities and the associated process vents and bypass lines are considered affected sources at a petroleum refinery. Under 40 CFR 60, Subpart Ja, the Tail Gas Treatment System and Sulfur Recovery System, is considered an affected facility by the Consent Decree as of June 3, 2013.

(1) One (1) Claus Unit Startup burner (SRU Burner 520-H-101), identified as 124-1, with a maximum heat input rating of 1.54 MMBtu per hour, combusting natural gas, and exhausting through one (1) stack identified as 124-1, constructed in 2005. Under 40 CFR 60, Subpart J, the Claus Unit Startup burner, is considered an affected facility. Under 40 CFR 63, Subpart DDDDD, the Claus Unit Startup burner is considered an affected facility.

(2) One (1) Tail Gas Treating Unit (TGTU) Incinerator burner (Clause Furnace 520-H-102), identified as 124-2, with a maximum heat input rating of 1.29 MMBtu per hour, combusting refinery fuel gas as a primary fuel and natural as a back fuel, and exhausting through one (1) stack identified as 124-2, constructed in 2005. In the event of unscheduled shutdown of the CCR unit, the Sulfur Recovery Unit effluent will be routed directly to the TGTU incinerator. Under 40 CFR 60, Subpart J, the Tail Gas Treating Unit (TGTU) Incinerator burner, is considered an affected facility. Under 40 CFR 63, Subpart DDDDD, the Tail Gas Treating Unit (TGTU) Incinerator burner is considered an affected facility.

(3) One (1) Tail Gas Treating Unit (TGTU) Incinerator (520-H-162), identified as 124-3, with a maximum process flow rate of 48,000 dry standard cubic feet per day, and exhausting through one (1) stack identified as 124-3, constructed in 2005.

(4) One (1) Sour Flare (520-H-163), identified as 124-4, with a maximum burner capacity of 0.92 MMBtu per hour, and a maximum process flow rate of 200 standard cubic feet per hour, and exhausting through one (1) stack identified as 124-4, constructed in 2005. Under 40 CFR 60, Subpart J, the Sour Flare, is considered an affected facility by the Consent Decree as of March 31, 2013.

(nn) One (1) Vacuum heater, identified as 200-H6, with a maximum heat input rate of 5.49 mmBtu/hr, combusting refinery fuel gas and natural gas as a backup, installed in 2005 and exhausting to stack 126. Under 40 CFR 63, Subpart DDDDD, the Vacuum heater is considered an affected facility.

(pp) One (1) Low Sulfur Gasoline (LSG) Unit consisting of the following equipment:

(1) LSG Reactor Charge Heater, identified as 810-H101, approved for construction in 2008, with a maximum capacity of 5.985 MMBtu, combusting refinery fuel gas only, and venting to stack 128. Under 40 CFR Part 60, Subpart Ja, the LSG Reactor Charge Heater is considered an affected facility. Under 40 CFR 63, Subpart DDDDD, the LSG Reactor Charge Heater is considered an affected facility.

(2) #5 Cooling Tower with a maximum capacity of 3,600 gpm approved for construction in 2008.

(3) LSG Unit components and drains (800 valves, 16 drains, and 5 pumps) approved for construction in 2008.

Under 40 CFR 63, Subpart CC, equipment leaks associated with a petroleum refinery are considered as an affected facility.

Under 40 CFR 60, Subpart QQQ, new and existing drains are considered affected facilities at a petroleum refinery.

Under 40 CFR 60, Subpart GGG, valves are considered affected facilities at a petroleum refinery.

Under 40 CFR 61 Subpart FF new and existing drains are considered affected facilities for benzene waste operations.

(The information describing the process contained in this emissions unit description box is descriptive information and does not constitute enforceable conditions.)

**Emission Limitations and Standards [326 IAC 2-7-5(1)]**

D.2.1 Particulate Matter (PM) [326 IAC 6-2-4]

Pursuant to 326 IAC 6-2-4 (Particulate Matter Emissions Limitations), particulate emissions from the 5.985 MMBtu/hr LSG Charge Reactor Heater shall not exceed Pt. This limitation is calculated using the following equation:

$$Pt = \frac{1.09}{Q^{0.26}}$$

Pt = Pounds of particulate matter emitted per million Btu (lb/MMBtu) heat input.

Q = Total source maximum operating capacity rating in million Btu per hour (MMBtu/hr) heat input. (Q > 10,000 MMBtu)

Pursuant to 326 IAC 6-2-4 (Particulate Emission Limitations for Sources of Indirect Heating), for Q > 10,000 MMBtu, Pt shall not exceed 0.1. Therefore, particulate emissions from the 5.985 MMBtu/hr LSG Charge Reactor Heater shall be limited to 0.1 pounds per MMBtu heat input.

D.2.2 Standards of Performance for Petroleum Refineries [326 IAC 12] [40 CFR 60, Subpart J] [326 IAC 2-7-10.5]

As required by Paragraph 17 and B.38 of the Consent Decree in Civil No. 3:13-CV-00030-RLY-WGH and pursuant to SSM No. 129-33810-00003:

(a) By no later than the "Date of Entry" of the Consent Decree in Civil No. 3:13-CV-00030-RLY-WGH, the FCCU catalyst regenerator shall be an affected facility as that term is used in 40 CFR 60, Subparts A and J, and shall be subject to and comply with the requirements of 40 CFR 60, Subparts A and J and specified in Section E.3 for $SO_2$, and CO applicable to the FCCU. Entry of the Consent Decree in Civil No. 3:13-CV-00030-RLY-WGH and compliance with the relevant monitoring requirements of Civil 3:13-CV-00030-RLY-WGH for the FCCU shall satisfy the notice requirements of 40 CFR 60.7(a) and the initial performance test requirement of 40 CFR 60.8(a).

(b) By no later than March 31, 2013, the Sulfur Flare shall be an “affected facility” as that term is used in the NSPS at Subparts A and J, and shall be subject to and comply with the requirements of Subparts A and J, including all monitoring, recordkeeping, reporting and operating requirements. Consistent with language in 40 C.F.R. § 60.104(a)(1) at the time of the Lodging of this Decree, the combustion in the Sulfur Flare of process upset gases or fuel gas that is released to the Sulfur Flare as a result of relief valve leakage or other emergency malfunctions is exempt from the emissions limit in 40 C.F.R. § 60.104(a)(1). To the extent that the exemption in 40 C.F.R. § 60.104(a)(1) identified in the preceding sentence is amended at any time during the duration of this Consent Decree, the amended language shall apply and not the language in the preceding sentence. In lieu of a monitoring by means of a CEMS, CountryMark, prior to the Lodging of this Consent Decree, submitted an Alternative Monitoring Plan to EPA Region 5 for approval. EPA approved the AMP.

D.2.3 Standards of Peformance for Petroleum Refineries [326 IAC 12] [40 CFR 60, Subpart Ja] [326 IAC 2-7-10.5]

As required by Paragraphs 39, 40, 41, and 43 of the Consent Decree entered in Civil No. 3:13-CV-00030-RLY-WGH and pursuant to SSM No. 129-33810-00003:

(a) By no later than June 30, 2013, the Sulfur Recovery Plant shall be an “affected facility” as that term is used in 40 CFR 60, Subparts A and Ja, for all pollutants applicable to SRPs, and shall be subject to and comply with the requirements of Subparts A and Ja, including all monitoring, recordkeeping, reporting, and operating requirements. Entry of the Consent Decree in Civil No. 3:13-CV-00030-RLY-WGH and compliance with the relevant monitoring requirements of Civil 3:13-CV-00030-RLY-WGH for the SRP shall satisfy the notice requirements of 40 CFR 60.7(a) and the initial performance test requirement of 40 CFR 60.8(a).

(b) At all times on and after the date of NSPS applicability for the SRP, the Permittee shall, for all periods of operation of the SRP, comply with 40 CFR § 60.102a(f)(2)(i), except during periods of Startup, Shutdown or Malfunction of the SRP or Malfunction of the Tail Gas Unit.

(c) At all times on and after the date of NSPS applicability for the SRP, including periods of Startup, Shutdown, and Malfunction, the Permittee shall, to the extent practicable, operate and maintain the SRP and associated air pollution control equipment in a manner consistent with good air pollution control practices for minimizing emissions as required by 40 CFR § 60.11(d).

(d) By no later than the "Date of Entry" of the Consent Decree in Civil No. 3:13-CV-00030-RLY-WGH, the Permittee shall, for the SRP monitor all Tail Gas emission points (stacks) to the atmosphere and install and operate an NSPS-compliant CEMS in accordance with NSPS Subpart Ja.

D.2.4 Consent Decree (Civil No. 3:13-CV-00030-RLY-WGH) Requirements [326 IAC 2-7-10.5]

As required by Paragraphs 11, 12, 14, 15, 21, and 42 of the Consent Decree in Civil No. 3:13-CV-00030-RLY-WGH and pursuant to SSM No. 129-33810-00003:

(a) By no later than the "Date of Entry" of the Consent Decree in Civil No. 3:13-CV-00030-RLY-WGH, the emissions of $NO_X$ from the FCCU shall not exceed 30 ppmvd @ 0% $O_2$ based on a "365-day rolling average" and 50 ppmvd $NO_X$ @ 0% $O_2$ based on a "7-day rolling average".

(b) $NO_X$ emissions during periods of Startup, Shutdown, or Malfunction of the FCCU or during periods of Malfunction of the FCCU's catalyst additive system shall not be used in determining compliance with the "7-day rolling average" $NO_X$ emission limits required by the Consent Decree in Civil No. 3:13-CV-00030-RLY-WGH at the FCCU, provided that during such periods the Permittee implements good air pollution control practices as required by 40 CFR 60.11(d) to minimize $NO_X$ emissions at the FCCU.

$NO_X$ emissions during periods of Startup, Shutdown, or Malfunction shall be used in determining compliance with the "365-day rolling average" $NO_X$ emission limits required by the Consent Decree in Civil No. 3:13-CV-00030-RLY-WGH at the FCCU.

(c) By no later than the "Date of Entry" of the Consent Decree in Civil No. 3:13-CV-00030-RLY-WGH, the emissions of $SO_2$ from the FCCU shall not exceed 25 ppmvd @ 0% O2 based on a "365-day rolling average" and 50 ppmvd @ 0% O2 based on a "7-day rolling average".

(d) $SO_2$ emissions during periods of Startup, Shutdown, or Malfunction shall not be used in determining compliance with the "7-day rolling average" $SO_2$ emission limits at the FCCU, provided that during such periods the Permittee implements good air pollution control practices as required by 40 CFR 60.11(d) to minimize $SO_2$ emissions at the FCCU.

$SO_2$ emissions during periods of Startup, Shutdown, or Malfunction shall be used in determining compliance with the "365-day rolling average" $SO_2$ emission limits required by the Consent Decree in Civil No. 3:13-CV-00030-RLY-WGH at the FCCU.

(e) By no later than the "Date of Entry" of the Consent Decree in Civil No. 3:13-CV-00030-RLY-WGH, the emissions of CO from the FCCU shall not exceed 500 ppmvd on a 1-hour average basis corrected to 0% O2.

(f) CO emissions during periods of Startup, Shutdown, or Malfunction shall not be used in determining compliance with the 1-hour 500 ppmvd emission limit, provided that during such periods the Permittee implements good air pollution control practices to minimize CO emissions from the FCCU.

(g) By no later than the "Date of Entry" of the Consent Decree in Civil No. 3:13-CV-00030-RLY-WGH, the Permittee shall for the SRP either eliminate, control, and/or include and monitor as part of a the SRP's emissions, all sulfur tank emissions.

D.2.5 Consent Decree Requirements [326 IAC 2-7-10.5]

As required by Paragraph 38 of the Consent Decree in Civil No. 3:13-CV-00030-RLY-WGH and pursuant to SSM No. 129-33810-00003:

(a) By no later than the "Date of Entry" of the Consent Decree in Civil No. 3:13-CV-00030-RLY-WGH, the Permittee shall not burn Fuel Oil in any existing combustion device except during periods of Natural Gas Curtailment, Test Runs, or operator training. Nothing in this prohibition limits the Permittee's ability to burn Torch Oil in an FCCU regenerator to assist in starting, restarting, maintaining hot standby, or maintaining regenerator heat balance.

(b) After the "Date of Lodging" of the Consent Decree in Civil No. 3:13-CV-00030-RLY-WGH, the Permittee shall not construct any new combustion device that burns Fuel Oil unless the air pollution control equipment controlling the combustion device either:

(1) has an SO2 control efficiency of 90% or greater; or

(2) achieves an SO2 concentration of 20 ppm or less at 0% O2 on a 3-hour rolling average basis.

Nothing in this Condition exempts the Permittee from securing all necessary permits before constructing a new combustion device.

D.2.6 Preventive Maintenance Plan [326 IAC 2-7-5(12)]

A Preventive Maintenance Plan is required for the CCR platformer heater, identified as 300 - H1, H2, H3, FCCU regenerator, identified as 500V-5, Hydrotreater Unit Reactor Charge heater identified as 210-H-100, Hydrotreater Unit Stabilizer Reboiler Heater identified as 210-H-101, Low Sulfur Gasoline Unit (LSG) identified as 810-H-101, and Gas Treatment System & Sulfur Recovery System consisting of TGTU Incinerator Burner (124-2) and their control devices. Section B - Preventive Maintenance Plan contains the Permittee's obligation with regard to the preventive maintenance plan required by this condition.

**Compliance Determination Requirements**

D.2.7 Continuous Emissions Monitoring [326 IAC 3-5] [326 IAC 2-7-6(1),(6)] [40 CFR 60, Subpart Ja]

(a) As required by Paragraphs 16, 23, and 13 of the Consent Decree in Civil No. 3:13-CV-00030-RLY-WGH and pursuant to SSM No. 129-33810-00003, by no later than the "Date of Entry" of the Consent Decree in Civil No. 3:13-CV-00030-RLY-WGH, the Permittee shall use $NO_X$, $SO_2$, CO, and $O_2$ CEMS to demonstrate compliance with the $NO_X$, CO, and $SO_2$ limits in Condition D.2.3 and D.2.4. The Permittee shall install, certify, calibrate, maintain and operate the $NO_X$, $SO_2$, CO and $O_2$ CEMS for the FCCU in accordance with the provisions of 40 CFR 60.13 that are applicable to CEMS (excluding those provisions applicable only to Continuous Opacity Monitoring Systems) and Part 60 Appendices A and F, and the applicable performance specification test of 40 CFR Part 60 Appendix B. However, unless Appendix F is required by the NSPS, state law or regulation, or a permit or approval, in lieu of the requirements of 40 CFR Appendix F 5.1.1, 5.1.3, and 5.1.4, the Permittee may conduct: (1) either a Relative Accuracy Audit (RAA) or a Relative Accuracy Test Audit (RATA) once every three years: and (2) a Cylinder Gas Audit (CGA) each calendar quarter in which a RAA or RATA is not performed. If the CEMS must be moved because of the installation of control equipment, the Permittee shall promptly reinstall, re-calibrate, and re-certify the CEMS.

(b) Pursuant to 326 IAC 3-5 (Continuous Monitoring of Emissions) continuous emission monitoring systems for SRP shall be calibrated, maintained, and operated for measuring $SO_2$ and $O_2$, which meet all applicable performance specifications of 326 IAC 3-5-2.

(c) Pursuant to 326 IAC 3-5 (Continuous Monitoring of Emissions) continuous emission monitoring systems for FCCU shall be calibrated, maintained, and operated for measuring NOx, $SO_2$, CO, and $O_2$, which meet all applicable performance specifications of 326 IAC 3-5-2.

(c) All continuous emissions monitoring systems are subject to monitor system certification requirements pursuant to 326 IAC 3-5-3.

(d) Nothing in this permit shall excuse the Permittee from complying with the requirements to operate a continuous emission monitoring system pursuant to 326 IAC 3-5 and 40 CFR 60, Subpart Ja.

D.2.8 Continuous Opacity Monitoring [326 IAC 3-5] [326 IAC 2-7-6(1),(6)] [40 CFR 60, Subpart Ja]

(a) As required by Paragraph 24 of the Consent Decree in Civil No. 3:13-CV-00030-RLY-WGH and pursuant to SSM No. 129-33810-00003, by no later than the "Date of Entry" of the Consent Decree in Civil No. 3:13-CV-00030-RLY-WGH, the Permittee shall use the Continuous Opacity Monitoring System (COMS) to demonstrate compliance with the NSPS opacity limit at 40 CFR Part 60.102(a)(2). The Permittee shall install, certify, calibrate, maintain and operate the COMS for the FCCU in accordance with 40 CFR Part 60.11, 60.13 and Part 60, Appendix A, and the applicable performance specification test of 40 CFR Part 60, Appendix B.

(b) The Permittee shall calibrate, certify, operate, and maintain a continuous monitoring system and related equipment to measure opacity from the FCCU stack in accordance with 326 IAC 3-5-2 and 326 IAC 3-5-3.

(c) The Permittee shall record the output of the continuous monitoring system(s) and shall perform the required record keeping and reporting, pursuant to 326 IAC 3-5-6 and 326 IAC 3-5-7.

(d) Nothing in this permit shall excuse the Permittee from complying with the requirements to operate a continuous emission monitoring system pursuant to 326 IAC 3-5 and 40 CFR 60, Subpart Ja.

**Compliance Monitoring Requirements [326 IAC 2-5.1-3(e)(2)] [ 326 IAC 2-6.1-5(a)(2)]**

D.2.9 $NO_X$, $SO_2$, CO and $O_2$ Continuous Emissions Monitoring (CEMS) Equipment Downtime

In the event that a breakdown of a $NO_X$, $SO_2$, CO and $O_2$ continuous emissions monitoring system (CEMS) occurs, a record shall be made of the time and reason of the breakdown and efforts made to correct the problem.

D.2.10 Maintenance of COMS [326 IAC 2-7-5(3)(A)(iii)] [326 IAC 3-5]

The Permittee shall comply with the following:

(a) The COMS shall meet the performance specifications of 40 CFR 60, Appendix B, Performance Specification No. 1, and are subject to monitor system certification requirements pursuant to 326 IAC 3-5.

(b) In the event that a breakdown of the COMS occurs, a record shall be made of the time and reason of the breakdown and efforts made to correct the problem.

(c) Whenever the COMS is malfunctioning or down for maintenance, or repairs for more than twenty-four (24) hours during FCCU operation, the Permittee shall provide a certified opacity reader to take visible emission readings from the FCCU stack.

(1) Visible emission readings shall be performed in accordance with 40 CFR 60, Appendix A, Method 9, for a minimum of five (5) consecutive six (6) minute averaging periods beginning not more than twenty-four (24) hours after the start of the COMS malfunction or down time.

(2) Method 9 opacity readings shall be repeated for a minimum of five (5) consecutive six (6) minute averaging periods at least once per day during daylight operations, until the COMS is placed back in service.

(3) Method 9 readings may be discontinued once a COM is online.

(4) If abnormal emissions are observed, the Permittee shall take a reasonable response. Observation of abnormal emissions that do not violate an applicable opacity limit is not a deviation from this permit. Failure to take response steps shall be considered a deviation from this permit. Section C – Response to Excursions or Exceedances contains the Permittee's obligations with regard to the reasonable response steps required by this condition.

(5) Any opacity exceedances determined by Method 9 readings shall be reported with the Quarterly Opacity Exceedances Reports.

**Record Keeping and Reporting Requirements [326 IAC 2-7-5(3)] [326 IAC 2-7-19]**

D.2.11 Record Keeping Requirements [326 IAC 2-7-5(3)(A)(iii)] [326 IAC 3-5]

(a) The Permittee shall record the output of the continuous monitoring systems ppmvd and shall perform the required record keeping pursuant to 326 IAC 3-5-6 and 326 IAC 3-5-7.

(b) In the event that a breakdown of the $NO_X$, $SO_2$, CO or $O_2$ continuous emission monitoring systems (CEMS) occurs, the Permittee shall maintain records of all CEMS malfunctions, out of control periods, calibration and adjustment activities, and repair or maintenance activities.

(c) To document the compliance status with opacity Conditions D.2.8 and D.2.10, the Permittee shall maintain records in accordance with (1) through (4) below. Records shall be complete and sufficient to establish compliance with the limits in Conditions D.2.2 and D.2.3.

(1) Data and results from the most recent stack test.

(2) All continuous opacity monitoring data, pursuant to 326 IAC 3-5-6.

(3) The results of all Method 9 visible emission readings taken during any periods of COM downtime.

(4) All multiclone and baghouse parametric monitoring readings.

(d) Section C - General Record Keeping Requirements, of this permit contains the Permittee's obligation with regard to the records required by this condition.

D.2.12 Reporting Requirements [326 IAC 2-7-5(3)(A)(iii)] [326 IAC 3-5]

(a) The Permittee shall prepare and submit to IDEM, OAQ a written report of the results of the calibration gas audits and relative accuracy test audits for each calendar quarter within thirty (30) calendar days after the end of each quarter. The report must contain the information required by 326 IAC 3-5-5(e)(2).

The report submitted by the Permittee does require the certification by the "responsible official" as defined by 326 IAC 2-7-1(35).

(b) Pursuant to 326 IAC 3-5-7(5), reporting of continuous monitoring system instrument downtime, except for zero (0) and span checks, which shall be reported separately, shall include the following:

(1) date of downtime;

(2) time of commencement;

(3) duration of each downtime;

(4) reasons for each downtime; and

(5) nature of system repairs and adjustments.

The report submitted by the Permittee does require the certification by the "responsible official" as defined by 326 IAC 2-7-1(35).

(c) A quarterly report of opacity exceedances shall be submitted to the address listed in Section C - General Reporting Requirements, of this permit, within thirty (30) days after the end of the quarter being reported. The report submitted by the Permittee does require the certification by the "responsible official" as defined by 326 IAC 2-7-1(35).

## SECTION D.3 FACILITY OPERATION CONDITIONS

**Emission Unit Description:**

| Tank ID | Tank Description | Max. Capacity (gallons) | Max. Withdrawal Rate (gal/hr) | Material Stored | Construction Date | NSPS and NESHAP applicability | Stack ID |
|---|---|---|---|---|---|---|---|
| 1 | fixed roof cone tank | 404,418 | 168,000 | hydrocarbon with vapor pressure no higher than the vapor pressure of jet naphtha, | 1940 | - | 075; |
| 2 | fixed roof cone tank | 404,502 | 168,000 | hydrocarbon with vapor pressure no higher than the vapor pressure of jet naphtha, | 1940 | - | 076; |
| 3 | fixed roof cone tank | 404,334 | 168,000 | hydrocarbon with vapor pressure no higher than the vapor pressure of jet naphtha, | 1940 | - | 077; |
| 4 | fixed roof cone tank | 118,272 | 168,000 | hydrocarbon with vapor pressure no higher than the vapor pressure of jet naphtha, | 1940 | - | 018; |
| 5 | fixed roof cone tank | 120,456 | 168,000 | hydrocarbon with vapor pressure no higher than the vapor pressure of jet naphtha, | 1940 | - | 019; |
| 6 | fixed roof cone tank | 120,456 | 168,000 | hydrocarbon with vapor pressure no higher than the vapor pressure of jet naphtha, | 1940 | - | 020; |
| 7 | fixed roof cone tank | 126,000 | 168,000 | hydrocarbon with vapor pressure no higher than the vapor pressure of jet naphtha, | 1940 | - | 078; |
| 8 | fixed roof cone tank | 126,000 | 168,000 | hydrocarbon with vapor pressure no higher than the vapor pressure of jet naphtha, | 1940 | - | 079; |
| 9 | fixed roof cone tank | 204,204 | 168,000 | hydrocarbon with vapor pressure no higher than the vapor pressure of jet naphtha, | 1940 | - | 023; |
| 10 | fixed roof cone tank | 121,590 | 168,000 | hydrocarbon with vapor pressure no higher than the vapor pressure of jet naphtha, | 1940 | - | 024; |
| 11A | fixed roof cone tank | 8,820 | 168,000 | oil water / mixture | 1972 | - | 080; |
| 11B | fixed roof cone tank | 8,820 | 168,000 | oil water / mixture | 1972 | - | 081; |

**Emission Unit Description:**

| Tank ID | Tank Description | Max. Capacity (gallons) | Max. Withdrawal Rate (gal/hr) | Material Stored | Construction Date | NSPS and NESHAP applicability | Stack ID |
|---|---|---|---|---|---|---|---|
| 12 | fixed roof cone tank | 6,090 | 168,000 | hydrocarbon with vapor pressure no higher than the vapor pressure of jet naphtha, | 1988 | - | 082; |
| 15 | fixed roof cone tank | 24,654 | 168,000 | hydrocarbon with vapor pressure no higher than the vapor pressure of jet naphtha, | 1941 | - | 083; |
| 17 | fixed roof cone tank | 997,584 | 168,000 | hydrocarbon with vapor pressure no higher than the vapor pressure of jet naphtha, | 1941 | - | 030; |
| 18 | internal floating roof tank/mechanical primary seal | 1,052,013 | 336,000 | hydrocarbon with vapor pressure equal to or less than the vapor pressure of 13 RVP gasoline, | 2003 | 40 CFR Part 60, Subpart Kb | 037; |
| 19 | fixed roof cone tank/internal floating roof tank/mechanical primary seal | 616,938 | 336,000 | hydrocarbon with vapor pressure equal to or less than the vapor pressure of 13 RVP gasoline, | 1941 | - | 032; |
| 21 | fixed roof cone tank/internal floating roof tank/mechanical primary seal | 1,002,750 | 336,000 | hydrocarbon with vapor pressure equal to or less than the vapor pressure of 13 RVP gasoline, | 1941 | - | 034; |
| 22A | fixed roof cone tank | 1,050,000 | 84,000 | hydrocarbon with vapor pressure equal to or less than the vapor pressure No. 2 fuel oil | 2003 | 40 CFR 63, Subpart CC | 120; |
| 22B | fixed roof cone tank/insulated/ heated cone tank | 1,050,000 | 16,800 | Residual Fuel Oil (No.6) or Petroleum Material with a vapor pressure equivalent to or less than No.2 distillate, | 2006 | - | 127; |
| 24 | fixed roof cone tank/internal floating roof tank/mechanical primary seal | 588,714 | 336,000 | hydrocarbon with vapor pressure equal to or less than the vapor pressure of 13 RVP gasoline, | 1985 | 40 CFR Part 60, Subpart Kb | 037; |
| 25 | fixed roof cone tank/internal floating roof tank/mechanical primary seal | 656,614 | 336,000 | hydrocarbon with vapor pressure equal to or less than the vapor pressure of 13 RVP gasoline, | 1941 | - | 038; |
| 26 | fixed roof cone tank/internal floating roof tank/mechanical primary seal | 1,006,068 | 336,000 | hydrocarbon with vapor pressure equal to or less than the vapor pressure of 13 RVP gasoline, | 1941 | - | 039; |

**Emission Unit Description:**

| Tank ID | Tank Description | Max. Capacity (gallons) | Max. Withdrawal Rate (gal/hr) | Material Stored | Construction Date | NSPS and NESHAP applicability | Stack ID |
|---|---|---|---|---|---|---|---|
| 33 | fixed roof cone tank | 2,262,960 | 168,000 | hydrocarbon with vapor pressure no higher than the vapor pressure of jet naphtha, | 1946 | - | 085; |
| 34 | fixed roof cone tank | 984,480 | 168,000 | hydrocarbon with vapor pressure no higher than the vapor pressure of jet naphtha, | 1946 | - | 045; |
| 35 | fixed roof cone tank/internal floating roof tank/mechanical primary seal | 997,962 | 336,000 | hydrocarbon with vapor pressure equal to or less than the vapor pressure of Distillate, | 1946 | - | 046; |
| 36 | fixed roof cone tank/internal floating roof tank/mechanical primary seal | 2,261,954 | 336,000 | hydrocarbon with vapor pressure equal to or less than the vapor pressure of jet kerosene, | 1946 | - | 047; |
| 37 | fixed roof cone tank | 2,247,126 | 210,000 | hydrocarbon with vapor pressure no higher than the vapor pressure of jet naphtha, | 1946 | - | 048; |
| 38 | fixed roof cone tank | 2,248,386 | 210,000 | hydrocarbon with vapor pressure no higher than the vapor pressure of jet naphtha, | 1948 | - | 049;; |
| 39 | fixed roof cone tank | 2,250,234 | 168,000 | hydrocarbon with vapor pressure no higher than the vapor pressure of jet naphtha, | 1948 | - | 050; |
| 40 | fixed roof cone tank/internal floating roof tank/mechanical primary seal | 2,222,388 | 336,000 | RVP 15 Gasoline, | 1949 | - | 051; |
| 41 | fixed roof cone tank/internal floating roof tank/mechanical primary seal | 2,204,244 | 336,000 | hydrocarbon with vapor pressure equal to or less than the vapor pressure of 13 RVP gasoline, | 1949 | - | 052; |
| 42 | fixed roof cone tank | 2,261,574 | 168,000 | hydrocarbon with vapor pressure no higher than the vapor pressure of jet naphtha, | 1950 | - | 053; |
| 43 | fixed roof cone tank | 2,254,098 | 168,000 | hydrocarbon with vapor pressure no higher than the vapor pressure of jet naphtha, | 1951 | - | 054; |

**Emission Unit Description:**

| Tank ID | Tank Description | Max. Capacity (gallons) | Max. Withdrawal Rate (gal/hr) | Material Stored | Construction Date | NSPS and NESHAP applicability | Stack ID |
|---|---|---|---|---|---|---|---|
| 44 | fixed roof cone tank/internal floating roof tank/mechanical primary seal | 2,310,000 | 336,000 | hydrocarbon with vapor pressure equal to or less than the vapor pressure of 13 RVP gasoline, | 1951 | - | 055; |
| 45 | fixed roof cone tank/internal floating roof tank/mechanical primary seal | 2,310,000 | 336,000 | hydrocarbon with vapor pressure equal to or less than the vapor pressure of 13 RVP gasoline, | 1951 | - | 056; |
| 46 | fixed roof cone tank/mechanical primary seal | 3,402,000 | 168,000 | hydrocarbon with vapor pressure equal to or less than the vapor pressure of distillate, | 1955 | - | 057; |
| 47 | fixed roof cone tank/internal floating roof tank/mechanical primary seal | 5,040,000 | 336,000 | hydrocarbon with vapor pressure equal to or less than the vapor pressure of 13 RVP gasoline, | 1976 | 40 CFR Part 60, Subpart K | 058; |
| 48 | fixed roof cone tank/external floating roof tank/ mechanical primary seal | 4,032,000 | 336,000 | hydrocarbon with vapor pressure equal to or less than the vapor pressure of 13 RVP gasoline, | 1958 | - | 059; |
| 49 | fixed roof cone tank/ external floating roof tank/ mechanical primary seal | 4,032,000 | 336,000 | hydrocarbon with vapor pressure equal to or less than the vapor pressure of 13 RVP gasoline, | 1958 | - | 060; |
| 50 | fixed roof cone tank/internal floating roof tank/mechanical primary seal | 3,934,266 | 336,000 | hydrocarbon with vapor pressure equal to or less than the vapor pressure of 13 RVP gasoline, | 1965 | - | 061; |
| 51 | fixed roof cone tank/internal floating roof tank/mechanical primary seal | 3,937,266 | 336,000 | hydrocarbon with vapor pressure equal to or less than the vapor pressure of 13 RVP gasoline, | 1973 | - | 062; |
| 52 | fixed roof cone tank | 3,935,148 | 336,000 | hydrocarbon with vapor pressure no higher than the vapor pressure of jet naphtha, | 1976 | 40 CFR Part 60, Subpart K | 063; |
| 53 | fixed roof cone tank | 16,926 | 168,000 | Ethanol, | 1985 | - | 086; |
| 54 | fixed roof cone tank | 16,926 | 168,000 | Ethanol, | 1985 | - | 087; |
| 55 | fixed roof cone tank | 11,634 | 168,000 | Ethanol, | 1980 | - | 088; |

**Emission Unit Description:**

| Tank ID | Tank Description | Max. Capacity (gallons) | Max. Withdrawal Rate (gal/hr) | Material Stored | Construction Date | NSPS and NESHAP applicability | Stack ID |
|---|---|---|---|---|---|---|---|
| 56 | fixed roof cone tank | 11,634 | 168,000 | Ethanol, | 1980 | - | 089; |
| 58 | fixed roof cone tank | 16,800 | 168,000 | hydrocarbon with vapor pressure equal to or less than the vapor pressure of 13 RVP gasoline, | 1980 | - | 102; |
| 159 | fixed roof cone tank | 16,800 | 168,000 | hydrocarbon with vapor pressure no higher than the vapor pressure of jet naphtha, | 1988 | - | 103; |
| 160 | fixed roof cone tank | 16,800 | 168,000 | hydrocarbon with vapor pressure no higher than the vapor pressure of jet naphtha, | 1994 | - | 104; |
| 161 | fixed roof cone tank | 16,800 | 168,000 | hydrocarbon with vapor pressure no higher than the vapor pressure of jet naphtha, | 1994 | - | 105; |
| 162 | fixed roof cone tank | 16,800 | 168,000 | hydrocarbon with vapor pressure no higher than the vapor pressure of jet naphtha, | 1994 | - | 106; |
| 163 | fixed roof cone tank | 16,800 | 168,000 | hydrocarbon with vapor pressure no higher than the vapor pressure of jet naphtha, | 1983 | - | 107; |
| 164 | fixed roof cone tank | 16,800 | 168,000 | hydrocarbon with vapor pressure no higher than the vapor pressure of jet naphtha, | 1983 | - | 108; |
| 165 | fixed roof cone tank | 16,800 | 168,000 | hydrocarbon with vapor pressure no higher than the vapor pressure of jet naphtha, | 1985 | - | 109; |
| 166 | fixed roof cone tank | 16,800 | 168,000 | hydrocarbon with vapor pressure no higher than the vapor pressure of jet naphtha, | 1985 | - | 110; |
| 167 | fixed roof cone tank | 16,800 | 168,000 | hydrocarbon with vapor pressure no higher than the vapor pressure of jet naphtha, | 1985 | - | 111; |
| 168 | fixed roof cone tank | 16,800 | 168,000 | hydrocarbon with vapor pressure no higher than the vapor pressure of jet naphtha, | 1988 | - | 112; |

**Emission Unit Description:**

| Tank ID | Tank Description | Max. Capacity (gallons) | Max. Withdrawal Rate (gal/hr) | Material Stored | Construction Date | NSPS and NESHAP applicability | Stack ID |
|---|---|---|---|---|---|---|---|
| 169 | fixed roof cone tank | 16,800 | 168,000 | hydrocarbon with vapor pressure equal to or less than the vapor pressure of 13 RVP gasoline, | 1989 | - | 113; |
| 125 | fixed roof cone tank | 157,000 | 6,000 | hydrocarbon with vapor pressure of No.2 fuel oil or less | 2005 | - | 015; |
| 173 | fixed roof cone tank/insulated/ heated cone tank | 1,050,000 | 16,800 | Residual Fuel Oil (No.6) or Petroleum Material with a vapor pressure equivalent to or less than No.2 distillate, | 2006 | - | 128; |
| 174 | fixed roof cone tank/insulated/ heated cone tank | 1,050,000 | 16,800 | Residual Fuel Oil (No.6) or Petroleum Material with a vapor pressure equivalent to or less than No.2 distillate, | 2007 | - | 129 |
| 175 | fixed roof cone tank/internal floating roof tank/liquid mounted primary seal | 2,310,000 | 210,000 | Petroleum with vapor pressure equal to or less than the vapor pressure of 13 RVP gasoline, | 2008 | 40 CFR Part 60, Subpart Kb | 130 |

**Emission Limitations and Standards [326 IAC 2-7-5(1)]**

D.3.1 Volatile Organic Compounds (VOC) [326 IAC 8-4-3]

Pursuant to 326 IAC 8-4-3, Tank Nos. 18, 22A, 24, and 175 are subject to the following:

(a) The facility must be equipped with an internal floating roof equipped with a closure seal, or seals, to close the space between the roof edge and tank wall unless the source has been equipped with equally effective alternative control which has been approved.

(b) The facility is maintained such that there are no visible holes, tears, or other openings in the seal or any seal fabric or materials.

(c) All openings, except stub drains, are equipped with covers, lids, or seals such that:

(1) the cover, lid, or seal is in the closed position at all times except when in actual use;

(2) automatic bleeder vents are closed at all times except when the roof is floated off or landed on the roof leg supports;

(3) rim vents, if provided are set to open when the roof is being floated off the roof leg supports or at the manufacturer's recommended setting.

D.3.2 Preventive Maintenance Plan [326 IAC 2-7-5(12)]

A Preventive Maintenance Plan is required for these facilities and their control devices. Section B - Preventive Maintenance Plan contains the Permittee's obligation with regard to the preventive maintenance plan required by this condition.

**Record Keeping and Reporting Requirement [326 IAC 2-7-5(3)] [326 IAC 2-7-19]**

D.3.3 Record Keeping Requirements [326 IAC 8-4-3]

(a) The Permittee shall comply with the record keeping requirements of 326 IAC 8-4-3. The following records are required for tank Nos. 18, 22A, 24, and 175:

(1) The types of volatile petroleum liquids stored,
(2) The maximum true vapor pressure of the liquids stored, and
(3) The results of the inspections performed on the tanks.

Such records will be maintained for a period of two (2) years and shall be made available to the commissioner upon written request.

(b) Section C - General Record Keeping Requirements, of this permit contains the Permittee's obligations with regard to the records required by this condition.

**SECTION D.4 FACILITY OPERATION CONDITIONS**

**Emission Unit Description:**

(t) Two (2) sets of Oil/water Separators equipped with covers for VOC control, identified as 071. Under 40 CFR 60, Subpart QQQ, new and existing drains are considered affected sources at a petroleum refinery.

(u) One (1) Miscellaneous operation (Sampling, Blowing, Purging, etc.), identified as 073;

(v) Pipeline Valves - Gas, identified as 090. Under 40 CFR 60, Subpart GGG, valves are considered affected sources at a petroleum refinery.

(w) Pipeline Valves - Light Liquid, identified as 091. Under 40 CFR 60, Subpart GGG, valves are considered affected sources at a petroleum refinery.

(x) Pipeline Valves - Heavy Liquid, identified as 092. Under 40 CFR 60, Subpart GGG, valves are considered affected sources at a petroleum refinery.

(y) Pipeline Valves - Hydrogen, identified as 093. Under 40 CFR 60, Subpart GGG, valves are considered affected sources at a petroleum refinery.

(z) Open Ended Valves, identified as 094. Under 40 CFR 60, Subpart GGG, open-ended valves are considered affected sources at a petroleum refinery.

(aa) Flanges, identified as 095. Under 40 CFR 60, Subpart GGG, the flanges are affected considered sources at a petroleum refinery.

(bb) Pump Seals Light Liquid, identified as 096. Under 40 CFR 60, Subpart GGG, equipment associated with the pump is considered an affected source at a petroleum refinery.

(cc) Pump Seals Heavy Liquid, identified as 097. Under 40 CFR 60, Subpart GGG, equipment associated with the pump is considered an affected source at a petroleum refinery.

(dd) Compressor Seals - Gas, identified as 098. Under 40 CFR 60, Subpart GGG, equipment associated with compressor is considered an affected source at a petroleum refinery.

(ee) Compressor Seals - Heavy Liquid, identified as 099. Under 40 CFR 60, Subpart GGG, equipment associated with compressor is considered an affected source at a petroleum refinery.

(ff) Drains, identified as 100.

(gg) Vessel Relief Valves, identified as 101. Under 40 CFR 60, Subpart GGG, pressure relief devices are considered affected sources at a petroleum refinery.

(hh) Cooling Towers, identified as 119.

(ii) Process units made up of vessels, piping, exchangers, identified as PENEX. Under 40 CFR 60, Subpart GGG, equipment associated with the sampling connection system is considered an affected source at a petroleum refinery.

(mm) Fugitive emissions from the Hydrotreater unit, Amine Unit, Sulfur Recovery Unit, Tail Gas Treatment Unit consisting of: Under 40 CFR 60, Subpart GGG, equipment associated with the sampling connection system is considered an affected source at a petroleum refinery. Under 40 CFR 63, Subpart CC, equipment leaks from storage vessels and equipment leaks associated with

a bulk gasoline terminal are considered affected sources.

(1) pipeline Valves - Gas, identified as 090.

(2) pipeline Valves - Light Liquid, identified as 091.

(3) pipeline Valves - Heavy Liquid, identified as 092.

(4) pipeline Valves - Hydrogen, identified as 093.

(5) open Ended Valves, identified as 094.

(6) Miscellaneous (Sampling, Blowing, Purging, etc.), identified as 073.

(7) flanges, identified as 095.

(8) pump Seals Light Liquid, identified as 096.

(9) pump Seals Heavy Liquid, identified as 097.

(10) compressor Seals - Gas, identified as 098.

(11) compressor Seals - Heavy Liquid, identified as 099.

(12) drains, identified as 100.

(13) vessel Relief Valves, identified as 101.

(14) cooling Towers, identified as 119.

(The information describing the process contained in this emissions unit description box is descriptive information and does not constitute enforceable conditions.)

**Emission Limitations and Standards [326 IAC 2-7-5(1)]**

D.4.1 Preventive Maintenance Plan [326 IAC 2-7-5(12)]

A Preventive Maintenance Plan is required for the two (2) sets of oil/water separators, all pipeline valves, open ended valves, flanges, pump seals, compressor seals, vessel relief valves, the Hydrotreater Unit, Amine Unit, Sulfur Recovery Unit, and Tail Gas Treatment Unit and their control devices. Section B - Preventive Maintenance Plan contains the Permittee's obligation with regard to the preventive maintenance plan required by this condition.

## SECTION D.5 FACILITY OPERATION CONDITIONS

**Emission Unit Description:**

(e) One (1) Main Refinery Flare, identified as 700V-101 with a maximum heat input rate of 371 mmBtu/hr of refinery fuel gas/process gas (with capacity for a supplementary pilot fuel heat input rate of 3.0 mmBtu/hr), installed in 1945 and replaced in 2006 and exhausting to stack 118. Under 40 CFR Part 60, Subpart Ja, the Main Refinery Flare is considered an affected facility.

(f) One (1) Crude heater equipped with a Low-NOx burner, identified as 200-H2 with a maximum heat input rate of 131 mmBtu/hr, combusting refinery fuel gas, installed in 1955 and exhausting to stack 1. Under 40 CFR 63, Subpart DDDDD the Crude heater is considered an affected facility.

(g) One (1) Unifiner heater, identified as 400-H5 with a maximum heat input rate of 20 mmBtu/hr, combusting refinery fuel gas, installed in 1959 and exhausting to stack 2. Under 40 CFR 63, Subpart DDDDD the Unifiner heater is considered an affected facility.

(h) One (1) Cycle oil heater, identified as H-H2 with a maximum heat input rate of 10 mmBtu/hr, combusting refinery fuel gas, installed in 1956 and exhausting to stack 3. Under 40 CFR 63, Subpart DDDDD the Cycle oil heater is considered an affected facility.

(i) One (1) Naphtha splitter heater, identified as 900-H1 with a maximum heat input rate of 12.2 mmBtu/hr, combusting refinery fuel gas, installed in 1956 and exhausting to stack 4. Under 40 CFR 63, Subpart DDDDD the Naphtha splitter heater is considered an affected facility.

(j) One (1) Vacuum heater, identified as 200-H4 with a maximum heat input rate of 14.1 mmBtu/hr, combusting refinery fuel gas, installed in 1950, approved to be modified in 2007, and exhausting to stack 5. Under 40 CFR 63, Subpart DDDDD the Vacuum heater is considered an affected facility.

(k) One (1) Old Platformer heater, identified as Naphtha Splitter Reboiler 900-H2 with a maximum heat input rate of 27 mmBtu/hr, combusting refinery fuel gas, installed in 1956 and exhausting to stack 6. Under 40 CFR 63, Subpart DDDDD the Old Platformer heater is considered an affected facility.

(l) One (1) Alkylation unit heater, identified as 100-H1 with a maximum heat input rate of 13.2 mmBtu/hr, combusting refinery fuel gas and No. 6 residual fuel oil, installed in 1966 and exhausting to stack 7. Under 40 CFR 63, Subpart DDDDD the Alkylation unit heater is considered an affected facility.

(m) One (1) Auxiliary crude heater, identified as 200-H1 with a maximum heat input rate of 10.1 mmBtu/hr, combusting refinery fuel gas, installed in 1966 and exhausting to stack 11. Under 40 CFR 63, Subpart DDDDD the Auxiliary crude heater is considered an affected facility.

(n) One (1) Platformer stabilizer reb, identified as 300-H4 with a maximum heat input rate of 5.92 mmBtu/hr, combusting refinery fuel gas, installed in 1956 and exhausting to stack 12. Under 40 CFR 63, Subpart DDDDD the Platformer stabilizer reb is considered an affected facility.

(o) One (1) no. 1 boiler, with a maximum heat input rate of 52 mmBtu/hr of process gas, identified as B1 and exhausting to stack 8. Under 40 CFR 63, Subpart DDDDD the no. 1 boiler is considered an affected facility.

(p) One (1) no. 2 boiler, with a maximum heat input rate of 65 mmBtu/hr of process gas, identified as B2 and exhausting to stack 13. Under 40 CFR 63, Subpart DDDDD the no. 2 boiler is considered an affected facility.

(q) One (1) natural gas or refinery gas fired boiler, approved in 2014 for construction, identified as boiler B5, with a maximum heat input of 118.14 mmBtu/hr, equipped with low NOx burners, and exhausting to stack 132. Under 40 CFR 60, Subpart Db, the boiler B5 is considered an affected facility. Under 40 CFR 60, Subpart Ja, the boiler B5 is considered an affected facility. Under 40 CFR 63, Subpart DDDDD, the boiler B5 is considered an affected facility.

(r) One (1) Vacuum heater husky, identified as 200-H3 with a maximum heat input rate of 6.27 mmBtu/hr, combusting refinery fuel gas, installed in 1963 and exhausting to stack 64. Under 40 CFR 63, Subpart DDDDD the Vacuum heater husky is considered an affected facility.

(b) One (1) Fluid Catalytic Cracking Unit (FCCU) Raw Oil Pre-heater, identified as 500-H101 with a maximum heat input rate of 18.1 million British Thermal Units per hour (mmBtu/hr), combusting refinery fuel gas only (no sour water stripper overhead off-gas combustion), installed in 1945 and exhausting to stack 9.

(s) One (1) CCR Platformer Unit which includes one (1) CCR Platformer Heater, identified as 300 - H1, H2, H3 with a maximum heat input rate of 70.3 mmBtu/hr, combusting refinery fuel gas, installed in 1992 and exhausting to stack 74. Under 40 CFR 63, Subpart UUU, process vents on the CCR are considered affected sources at a petroleum refinery. Under 40 CFR 60, Subpart J, the CCR Platformer Unit, is considered an affected facility. Under 40 CFR 63, Subpart DDDDD, the CCR is considered an affected facility.

(oo) One (1) boiler identified as B4, constructed in 2006, with a maximum heat input rate of 84.9 MMBtu/hr of process gas and/or natural gas, identified as B4 and exhausting to stack 131.

Under the Standards of Performance for Small Industrial-Commercial-Institutional Steam Generating Units NSPS (40 CFR 60, Subpart Dc), the boiler identified as boiler B4 above is considered an affected facility.

Under the Standards of Performance for Petroleum Refineries (40 CFR Part 60, Subpart J), the boiler identified as boiler B4 above, is considered an affected facility. Under 40 CFR 63, Subpart DDDDD, the boiler B4 is considered an affected facility.

(The information describing the process contained in this emissions unit description box is descriptive information and does not constitute enforceable conditions.)

**Emission Limitations and Standards [326 IAC 2-7-5(1)]**

D.5.1 NOx Minor Emission Limitation [326 IAC 2-2]

In order to render the requirements of 326 IAC 2-2 (PSD) not applicable, the Permittee shall comply with the following:

The $NO_x$ emission rate from the boiler B5 shall not exceed 31.05 tons per twelve (12) consecutive month period, with compliance determined at the end of each month.

Compliance with this emission limit, in conjunction with the PTE of GenB5, will ensure that the potential to emit from this modification is less than forty (40) tons of $NO_x$ per year and therefore will render the requirements of 326 IAC 2-2 not applicable.

D.5.2 Particulate Matter (PM) [326 IAC 6-2-3]

Pursuant to 326 IAC 6-2-3 (Particulate Matter Emission Limitations for Sources of Indirect Heating), the PM emissions from boilers B1 and B2 shall be limited to 0.40 and 0.25 pounds per MMBtu heat input, respectively.

This limitation is based on the following equation:

$$P_T = \frac{C \times a \times h}{76.5 \times Q^{0.75} \times N^{0.25}}$$

Where: C = maximum ground level concentration (50 µg/m3, for a period not to exceed 60 min.)
Pt = maximum allowable particulate matter (PM) emitted per MMBtu heat input
Q = total source max. indirect heater input

N = Number of stacks in fuel burning operation.

a = plume rise factor (0.67, for Q < 1,000)

h = Stack height in feet. If a number of stacks of different heights exist, the average stack height to represent "N" stacks shall be calculated by weighing each stack height with its particulate matter emission rate as follows:

$$h = \frac{\sum_{i=1}^{N} H_i \times pa_i \times Q}{\sum_{i=1}^{N} pa_i \times Q}$$

Where: pa = the actual controlled emission rate in lb/mmBtu using the emission factor from AP-42 or stack test data.

D.5.3 Particulate Matter (PM) [326 IAC 6-2-4]

Pursuant to 326 IAC 6-2-4 (Particulate Emission Limitations for Sources of Indirect Heating), the PM emissions from the following units shall be limited to Pt pounds per MMBtu heat input, as follows:

| Emission Unit | Unit ID | Pt (lb/MMBtu) |
|---|---|---|
| Boiler | B4 | 0.25 |
| Boiler | B5 | 0.26 |

D.5.4 Sulfur Dioxide (SO2) [326 IAC 7-1.1-1] [326 IAC 7-2-1]

Pursuant to 326 IAC 7-1.1 ($SO_2$ Emissions Limitations) the $SO_2$ emissions from the emission unit 100-H1, when burning No. 6 residual fuel oil, shall not exceed 1.6 pounds per MMBtu heat input.

D.5.5 Consent Decree (Civil No. 3:13-CV-00030-RLY-WGH) Requirements

(a) As required by Paragraph 27 of the Consent Decree entered in Civil No. 3:13-CV-00030-RLY-WGH and pursuant to SSM No. 129-33810-00003, on or before December 31, 2017, the Permittee shall use Qualifying Controls to reduce NOx emissions from the following combustion units by at least 68 tons per year so as to satisfy the following inequality: crude heater (200-H2), CCR Platformer Heater (300-H1, H2, H3), no. 1 boiler, no. 2 boiler, no. 3 boiler, and no. 4 boiler.

$$\sum_{i=1}^{n} [E_{actual_i} - E_{allowable_i}] \geq 68 \text{ tons of NOx per year}$$

Where:

(Eallowable)i = [(The permitted allowable pounds of NOx per million BTU for Combustion Unit i/(2000 pounds per ton)] x [(the lower of permitted or maximum heat input rate capacity in million BTU per hour for Combustion Unit i) x (the lower of 8760 or permitted hours per year)];

(EActual)i = The tons of NOx per year prior actual emissions during the refinery baseline years (unless prior actual emissions exceed allowable emissions, then use allowable) as shown in Appendix A of the Consent Decree for the crude heater (200-H2), CCR Platformer Heater (300 H1, H2, H3), no. 1 boiler, no. 2 boiler, no. 3 boiler, and no. 4 boiler; and

n = The number of Combustion Units with Qualifying Controls from the following that are selected by the Permittee to satisfy the requirements of the equation set forth in this Condition: crude heater (200-H2), CCR Platformer Heater (300 H1, H2, H3), no. 1 boiler, no. 2 boiler, no. 3 boiler, and no. 4 boiler.

(b) The Permittee shall comply with the following limits:

| Unit ID | Firing Rate, mmBTU/hr, annual average | NOx, lb/mmBTU | Hours of operation per year | NOx emissions, tons per year |
|---|---|---|---|---|
| B1 | 31.34 | 0.20 | 8,350 | 26.17 |
| B4 | 84.9 | 0.045 | 8,760 | 16.73 |
| B2 | Permanent shut down upon startup of B5 | | | |
| B3 | Permanent shut down | | | |

Prior to monitoring with a CEMS, the NOx in lb/mmBtu shall be determined using a 12-hour average (averaging period of the reference test method), following completion of CEMS certification for B1 and B4, the NOx in lb/mmBtu shall be determined using a 365-day rolling average.

D.5.6 Consent Decree Requirements [326 IAC 2-7-10.5]

As required by Paragraph 38 of the Consent Decree entered in Civil No. 3:13-CV-00030-RLY-WGH and pursuant to SSM No. 129-33810-00003:

(a) By no later than the "Date of Entry" of the Consent Decree in Civil No. 3:13-CV-00030-RLY-WGH, the Permittee shall not burn Fuel Oil in any existing combustion device except during periods of Natural Gas Curtailment, Test Runs, or operator training. Nothing in this prohibition limits the Permittee's ability to burn Torch Oil in an FCCU regenerator to assist in starting, restarting, maintaining hot standby, or maintaining regenerator heat balance.

(b) By no later than the "Date of Lodging" of the Consent Decree in Civil No. 3:13-CV-00030-RLY-WGH, the Permittee shall not construct any new combustion device that burns Fuel Oil unless the air pollution control equipment controlling the combustion device either:

(1) has an SO2 control efficiency of 90% or greater; or

(2) achieves an SO2 concentration of 20 ppm or less at 0% O2 on a 3-hour rolling average basis.

Nothing in this Condition exempts the Permittee from securing all necessary permits before constructing a new combustion device.

D.5.7 Consent Decree Requirements [326 IAC 2-7-10.5] – Main Flare

As required by Paragraph B.25 of the Consent Decree in Civil No. 3:13-CV-00030-RLY-WGH and pursuant to SSM No. 129-33810-00003, by no later than the Date of Entry, CountryMark shall comply with the following requirements at the Covered Flare:

(a) CountryMark shall operate the Covered Flare at all times when emissions may be vented to it.

(b) Except for periods of Startup, Shutdown, and/or Malfunction of the Covered Flare, CountryMark shall operate the Covered Flare with no Visible Emissions. Method 22 in 40 C.F.R. Part 60, Appendix A, shall be used to determine compliance with this standard. However, for purposes of this Appendix, Visible Emissions may be determined by either a person certified pursuant to Method 22 or by a video camera.

(c) Except for periods of Malfunction of the Flare, CountryMark shall operate each Covered Flare with a flame present at all times. CountryMark shall monitor the presence of the pilot flame using a thermocouple or any other equivalent device to detect the presence of the pilot flame.

(d) CountryMark shall comply with all applicable Subparts of 40 C.F.R. Parts 60, 61, or 63 that state how a particular Covered Flare must be monitored.

(e) At all times, including during periods of Startup, Shutdown, and/or Malfunction, CountryMark shall implement good air pollution control practices to minimize emissions from the Covered Flare; provided however, that CountryMark shall not be in violation of this requirement for any practice that this Appendix requires CountryMark to implement after the Date of Entry for the period between the Date of Entry and the implementation date or compliance date (whichever is applicable) for the particular practice.

D.5.8 Standards of Performance for Petroleum Refineries [326 IAC 12] [40 CFR 60, Subpart J] [40 CFR 60, Subpart Ja] [326 IAC 2-7-10.5]

As required by Paragraph B.39 and B.40 of the Consent Decree in Civil No. 3:13-CV-00030-RLY-WGH and pursuant to SSM No. 129-33810-00003:

(a) Beginning on March 31, 2013, and continuing until, pursuant (b) below, the Covered Flare becomes subject to 40 C.F.R. Part 60, Subpart Ja, the Covered Flare shall be an “affected facility” as that term is used in the NSPS at Subparts A and J, and shall be subject to and comply with the requirements of Subparts A and J, including all monitoring, recordkeeping, reporting and operating requirements.

(b) The Covered Flare shall be an “affected facility” within the meaning of Subparts A and Ja of 40 C.F.R. Part 60, and shall comply with the requirements of Subparts A and Ja, including all monitoring, recordkeeping, reporting, and operating requirements, by the later of: (i) March 31, 2013; or (ii) the earliest date(s) by which a “modified” flare (within the meaning of Subpart Ja) must comply with the requirements of Subpart Ja.

(1) To the extent that the later of the two possible dates is March 31, 2013, then Subpart Ja, and not Subpart J, is the applicable Subpart on and after March 31, 2013.

(2) To the extent that the later of the two possible dates is “the earliest date by which a ‘modified’ flare (within the meaning of Subpart Ja) must comply with the requirements of Subpart Ja,” then Subpart J is applicable between March 31,

2013, and the applicable date(s) of Subpart Ja. Thereafter, only Subpart Ja is applicable.

(3) On and after the date(s) that the Covered Flare is subject to Subpart Ja, Subpart J no longer is applicable to that Covered Flare.

D.5.9 Preventive Maintenance Plan [326 IAC 2-7-5(12)]

A Preventive Maintenance Plan is required for the one (1) Main Refinery Flare, identified as 700-V101, one (1) Crude heater equipped with a Low-NOx burner, identified as 200-H2, one (1) Unifiner heater, identified as 400-H5, one (1) Cycle oil heater, identified as H-H2, one (1) Naphtha splitter heater, identified as 900-H1, one (1) Vacuum heater, identified as 200-H4, one (1) Old Platformer heater, identified as Naphtha Splitter Reboiler 900-H2, one (1) Alkylation unit heater, identified as 100-H1, one (1) Auxiliary crude heater, identified as 200-H1, one (1) Platformer stabilizer , identified as 300-H4, four (4) boilers, identified as B1, B2, B4, B5, one (1) Vacuum heater husky, identified as 200-H3, One (1) Fluid Catalytic Cracking Unit (FCCU) Raw Oil Pre-heater, identified as 500-H101, and their control devices. Section B - Preventive Maintenance Plan contains the Permittee's obligation with regard to the preventive maintenance plan required by this condition.

**Compliance Determination Requirements**

D.5.10 Sulfur Dioxide Emissions and Sulfur Content

Compliance with Condition D.5.4 shall be determined utilizing one of the following options:

(a) Pursuant to 326 IAC 3-7-4, the Permittee shall demonstrate that the sulfur dioxide emissions do not exceed 1.6 pound per million Btu heat input by:

(1) Providing vendor analysis of fuel delivered, if accompanied by a vendor certification, or;

(2) Analyzing the oil sample to determine the sulfur content of the oil via the procedures in 40 CFR 60, Appendix A, Method 19.

(A) Oil samples may be collected from the fuel tank immediately after the fuel tank is filled and before any oil is combusted; and

(B) If a partially empty fuel tank is refilled, a new sample and analysis would be required upon filling.

(b) Compliance may also be determined by conducting a stack test for sulfur dioxide emissions from the boiler using 40 CFR 60, Appendix A, Method 6 in accordance with the procedures in 326 IAC 3-6.

A determination of noncompliance pursuant to any of the methods specified in (a) or (b) above shall not be refuted by evidence of compliance pursuant to the other method.

D.5.11 NOx Limitation Averaging Time and Monitoring Requirements

As required by Paragraph 31 of the Consent Decree entered in Civil No. 3:13-CV-00030-RLY-WGH and pursuant to SSM No. 129-33810-00003, except for any Combustion Unit for which the Qualifying Control is a permanent shutdown as identified in Subparagraph 26.d of the Consent Decree, beginning no later than one-hundred eighty (180) days after installing Qualifying Controls on and commencing operation of a Combustion Unit that will be used to satisfy the requirements of Paragraph 27 of the Consent Decree, the Permittee will monitor the Combustion Units as follows:

(a) For Combustion Units with a maximum physical capacity greater than 100 mmBTU/hr (HHV), install or continue to operate a NOx CEMS;

(b) For Combustion Units with a maximum physical capacity of less than or equal to 100 mmBTU/hr (HHV), conduct an initial performance test and any periodic tests that may be required by EPA or by IDEM under other applicable regulatory authority. The results of the initial performance testing will be reported to EPA and IDEM.

The Permittee will use Method 7E of 40 C.F.R. Part 60, Appendix A-4 (or a test method made applicable by a future, final EPA regulation) to conduct initial performance testing for NOx emissions required by Subparagraph 31.b of the Consent Decree. Units with Qualifying Controls installed before the Date of Entry that are subject to this Condition will comply by no later than July 31, 2013.

D.5.12 Continuous Emissions Monitoring [326 IAC 3-5] [326 IAC 2-7-6(1),(6)][40 CFR 60, Subpart Db]

(a) As required by Paragraph 32 of the Consent Decree in Civil No. 3:13-CV-00030-RLY-WGH and pursuant to SSM No. 129-33810-00003, the Permittee shall use $NO_X$ CEMS to demonstrate compliance with the $NO_X$ limits in Condition D.5.5. The Permittee shall install, certify, calibrate, maintain and operate any $NO_X$ CEMS required by Paragraph 31.a in accordance with the provisions of 40 CFR 60.13 that are applicable to CEMS (excluding those provisions applicable only to Continuous Opacity Monitoring Systems) and Part 60 Appendices A and F, and the applicable performance specification test of 40 CFR Part 60 Appendix B. However, unless Appendix F is required by the NSPS, state law or regulation, or a permit or approval, in lieu of the requirements of 40 CFR Appendix F 5.1.1, 5.1.3, and 5.1.4, the Permittee may conduct: (1) either a Relative Accuracy Audit (RAA) or a Relative Accuracy Test Audit (RATA) once every three years: and (2) a Cylinder Gas Audit (CGA) each calendar quarter in which a RAA or RATA is not performed. If the CEMS must be moved because of the installation of control equipment, the Permittee shall promptly reinstall, re-calibrate, and re-certify the CEMS.

(b) In order to demonstrate compliance with the a 365-day rolling average $NO_X$ limits in Condition D.5.5 (b) for B1 and B4, the Permittee shall use a $NO_X$ CEMS meeting the requirements of (a) and (d) of this Condition.

(c) Pursuant to 326 IAC 3-5 (Continuous Monitoring of Emissions) continuous emission monitoring systems for Combustion Units generating steam with a maximum physical capacity greater than 100 mmBTU/hr (HHV) and boiler B5 shall be calibrated, maintained, and operated for measuring $NO_x$, which meet all applicable performance specifications of 326 IAC 3-5-2.

(d) All continuous emissions monitoring systems are subject to monitor system certification requirements pursuant to 326 IAC 3-5-3.

(e) Nothing in this permit shall excuse the Permittee from complying with the requirements to operate a continuous emission monitoring system pursuant to 326 IAC 3-5, 40 CFR 60, Subpart Db, 40 CFR 60, Subpart Ja, and 40 CFR 63, Subpart DDDDD.

**Compliance Monitoring Requirements [326 IAC 2-5.1-3(e)(2)] [ 326 IAC 2-6.1-5(a)(2)]**

D.5.13 $NO_x$ Continuous Emissions Monitoring (CEMS) Equipment Downtime

In the event that a breakdown of a $NO_x$ continuous emissions monitoring system (CEMS) occurs, a record shall be made of the time and reason of the breakdown and efforts made to correct the problem.

**Record Keeping and Reporting Requirement [326 IAC 2-7-5(3)] [326 IAC 2-7-19]**

D.5.14 Record Keeping Requirements [326 IAC 2-7-5(3)(A)(iii)][326 IAC 3-5]

(a) To document the compliance status with Condition D.5.4, the Permittee shall maintain records in accordance with (1) through (6) below.

(1) Calendar dates covered in the compliance determination period;

(2) Actual No. 6 residual fuel oil usage per month since last compliance determination period and equivalent $SO_2$ emissions;

(3) A certification, signed by the Permittee, that the records of the fuel supplier certifications represent all of the fuel combusted during the period; and

If the fuel supplier certification is used to demonstrate compliance the following, as a minimum, shall be maintained:

(4) Fuel supplier certifications.

(5) The name of the fuel supplier; and

(6) A statement from the fuel supplier that certifies the sulfur content of the fuel oil.

The Permittee shall retain records of all recording/monitoring data and support information for a period of five (5) years or longer if specified elsewhere in this permit, from the date of the monitoring sample, measurement, or report. Support information includes all calibration and maintenance records and all original strip-chart recordings for continuous monitoring instrumentation, and copies of all reports required by this permit.

(d) To document the compliance status with Conditions D.5.5 the Permittee shall maintain records in accordance with (1) through (3) below.

(1) The annual boiler B1 and boiler B4 fuel usage and the annual average fuel BTU content.

(2) Boiler B1 and boiler B4 NOx emission rate from the $NO_x$ CEMS.

(3) Boiler B1 and boiler B4 annual hours of operation.

The Permittee shall retain records of all recording/monitoring data and support information for a period of five (5) years or longer if specified elsewhere in this permit, from the date of the monitoring sample, measurement, or report. Support information includes all calibration and maintenance records and all original strip-chart recordings for continuous monitoring instrumentation, and copies of all reports required by this permit.

(e) To document the compliance status with Condition D.5.1, the Permittee shall maintain records of the tons of NOx emitted monthly and per twelve (12) consecutive month period from boiler B5.

(f) The Permittee shall record the output of the continuous monitoring system(s) tons per hour and shall perform the required record keeping pursuant to 326 IAC 3-5-6 and 326 IAC 3-5-7.

(g) In the event that a breakdown of the $NO_x$ continuous emission monitoring systems (CEMS) occurs, the Permittee shall maintain records of all CEMS malfunctions, out of control periods, calibration and adjustment activities, and repair or maintenance activities.

(h) Section C - General Record Keeping Requirements, of this permit contains the Permittee's obligations with regard to the records required by this condition.

D.5.15 Reporting Requirements [326 IAC 2-7-5(3)(A)(iii)][326 IAC 3-5]

(a) A quarterly summary of the information to document compliance with Condition D.5.1 shall be submitted not later than thirty (30) days after the end of the quarter being reported. Section C - General Reporting contains the Permittee's obligation with regard to the reporting required by this condition. The report submitted by the Permittee does require a certification that meets the requirements of 326 IAC 2-7-6(1) by a "responsible official," as defined by 326 IAC 2-7-1 (35).

(b) The Permittee shall prepare and submit to IDEM, OAQ a written report of the results of the calibration gas audits and relative accuracy test audits for each calendar quarter within thirty (30) calendar days after the end of each quarter. The report must contain the information required by 326 IAC 3-5-5(e)(2).

The report submitted by the Permittee does require the certification by the "responsible official" as defined by 326 IAC 2-7-1(35).

(c) Pursuant to 326 IAC 3-5-7(5), reporting of continuous monitoring system instrument downtime, except for zero (0) and span checks, which shall be reported separately, shall include the following:

(1) date of downtime;

(2) time of commencement;

(3) duration of each downtime;

(4) reasons for each downtime; and

(5) nature of system repairs and adjustments.

The report submitted by the Permittee does require the certification by the "responsible official" as defined by 326 IAC 2-7-1(35).

## SECTION D.6 FACILITY OPERATION CONDITIONS

**Emission Unit Description:**

The following insignificant activities which are specifically regulated, as defined in 326 IAC 2-7-1(21):

(a) Metal and related material cutting, fabricating and preparation. [326 IAC 6-3]

(b) Sand blasting or mechanical stripping on tanks and other equipment. [326 IAC 6-3]

(c) Painting on tanks and other equipment. [326 IAC 6-3]

(d) Welding/Cutting of metal for vessel, pipeline and equipment maintenance. [326 IAC 6-3]

(The information describing the process contained in this facility description box is descriptive information and does not constitute enforceable conditions.)

**Emission Limitations and Standards [326 IAC 2-7-5(1)]**

D.6.1 Particulate Matter Emission Limitations For Processes with Process Weight Rates Less Than One Hundred (100) pounds per hour [326 IAC 6-3-2(c)]

Pursuant to 326 IAC 6-3-2 (Particulate Emission Limitations for Manufacturing Processes) the particulate emissions from the equipment listed under insignificant activities shall be limited by the following:

Interpolation and extrapolation of the data for the process weight rate in excess of sixty thousand (60,000) pounds per hour shall be accomplished by use of the equation:

$E = 4.10\ P^{0.67}$ where E = rate of emission in pounds per hour and
P = process weight rate in tons per hour.

## SECTION E.1 EMISSIONS UNIT OPERATION CONDITIONS

**Emissions Unit Description:**

(a) One (1) Truck loading rack, with a maximum capacity of 60,000 gallons of submerged loading of gasoline, kerosene or distillate oil per hour, installed in 1958, identified as Loading Rack, and exhausting to stack 65; controlled by the Loading Rack Flare, equipped with a 0.09 million British Thermal Units per hour (mmBtu/hr) natural gas fired pilot and designed to handle 160 actual cubic feet per minute (acfm) of hydrocarbon vapors, installed in 1998, and exhausting to stack 1D; Under 40 CFR 63, Subpart R, this facility is considered an existing bulk gasoline terminal.

(The information describing the process contained in this emissions unit description box is descriptive information and does not constitute enforceable conditions.)

**Emission Limitations and Standards [326 IAC 2-7-5(1)]**

E.1.1 General Provisions Relating to NESHAP [326 IAC 20-1-1] [40 CFR Part 63, Subpart A]

The provisions of 40 CFR Part 63, Subpart A - General Provisions, which are incorporated as 326 IAC 20-1-1, apply to the facility described in this section except when otherwise specified in Table 1 of 40 CFR Part 63, Subpart R.

E.1.2 Gasoline Distribution Facilities NESHAP [326 IAC 20-10-1] [40 CFR 63, Subpart R]

The Permittee shall comply with the provisions of 40 CFR 63, Subpart R - National Emission Standards for Gasoline Distribution Facilities, which are incorporated by reference as 326 IAC 20-10-1, apply to the truck loading rack and flare. This rule is included as Attachment A. This source is subject to the following requirements of 40 CFR Part 63, Subpart R:

(1) 40 CFR Part 63.420
(2) 40 CFR Part 63.421
(3) 40 CFR Part 63.422(a-c)
(4) 40 CFR Part 63.424
(5) 40 CFR Part 63.425(a-c), (e-h)
(6) 40 CFR Part 63.427(a-b)
(7) 40 CFR Part 63.428(b), (c), (e), (f), (g), (h)(1-3), (i), (j), (k)
(8) Table 1.

## SECTION E.2 FACILITY OPERATION CONDITIONS

**Emission Unit Description:**

(c) One (1) FCCU regenerator, identified as 500V-5 with an average throughput rate of 380 barrels fresh feed per hour, installed in 1950, controlled by a cyclone and exhausting to stack 10. Under 40 CFR 63, Subpart UUU, process vents on the FCCU are considered affected sources at a petroleum refinery. Under 40 CFR 60, Subpart J, the 500V-5 is considered an affected facility by the Consent Decree as of "Date of Entry" for $SO_2$ and CO.

(s) One (1) CCR Platformer Unit which includes one (1) CCR Platformer Heater, identified as 300 - H1, H2, H3 with a maximum heat input rate of 70.3 mmBtu/hr, combusting refinery fuel gas, installed in 1992 and exhausting to stack 74. Under 40 CFR 63, Subpart UUU, process vents on the CCR are considered affected sources at a petroleum refinery. Under 40 CFR 60, Subpart J, the CCR Platformer Unit, is considered an affected facility. Under 40 CFR 63, Subpart DDDDD, the CCR is considered an affected facility.

(ll) One (1) Tail Gas Treatment System and Sulfur Recovery System identified as 124 and consisting of the following: Under 40 CFR 63, Subpart UUU, these facilities and the associated process vents and bypass lines are considered affected sources at a petroleum refinery. Under 40 CFR 60, Subpart Ja, the Tail Gas Treatment System and Sulfur Recovery System, is considered an affected facility by the Consent Decree as of June 3, 2013.

(3) One (1) Tail Gas Treating Unit (TGTU) Incinerator (520-H-162), identified as 124-3, with a maximum process flow rate of 48,000 dry standard cubic feet per day, and exhausting through one (1) stack identified as 124-3, constructed in 2005.

(4) One (1) Sour Flare (520-H-163), identified as 124-4, with a maximum burner capacity of 0.92 MMBtu per hour, and a maximum process flow rate of 200 standard cubic feet per hour, and exhausting through one (1) stack identified as 124-4, constructed in 2005. Under 40 CFR 60, Subpart J, the Sour Flare, is considered an affected facility by the Consent Decree as of March 31, 2013.

Under 40 CFR 63, Subpart UUU, these facilities and the associated process vents and bypass lines are considered affected sources at a petroleum refinery.

(The information describing the process contained in this emissions unit description box is descriptive information and does not constitute enforceable conditions.)

**Emission Limitations and Standards [326 IAC 2-7-5(1)]**

E.2.1 General Provisions Relating to NESHAP [326 IAC 20-1-1] [40 CFR 63, Subpart A]

The provisions of 40 CFR Part 63, Subpart A - General Provisions, which are incorporated as 326 IAC 20-1-1, apply to the facility described in this section except when otherwise specified in Table 1 of 40 CFR Part 63, Subpart UUU.

E.2.2 National Emission Standards for Hazardous Air Pollutants for Petroleum Refineries: Catalytic Cracking Units, Catalytic Reforming Units, and Sulfur Recovery Units [40 CFR Part 63, Subpart UUU] [326 IAC 20-50-1]

The Permittee shall comply with the provisions of 40 CFR 63, Subpart UUU - National Emission Standards for Hazardous Air Pollutants for Petroleum Refineries: Catalytic Cracking Units, Catalytic Reforming Units, and Sulfur Recovery Units, which are incorporated by reference as 326 IAC 20-50-1, apply to the associated process vents and bypass lines. This rule is included as Attachment B. This source is subject to the following requirements of 40 CFR Part 63, Subpart UUU:

(1) 40 CFR 63.1560
(2) 40 CFR 63.1561
(3) 40 CFR 63.1562
(4) 40 CFR 63.1563(b), (c)1, 2i-iv, (e)
(5) 40 CFR 63.1564
(6) 40 CFR 63.1565
(7) 40 CFR 63.1566
(8) 40 CFR 63.1567
(9) 40 CFR 63.1568
(10) 40 CFR 63.1569
(11) 40 CFR 63.1570
(12) 40 CFR 63.1571
(13) 40 CFR 63.1572
(14) 40 CFR 63.1573
(15) 40 CFR 63.1574
(16) 40 CFR 63.1575
(17) 40 CFR 63.1576
(18) 40 CFR 63.1577
(19) 40 CFR 63.1578
(20) 40 CFR 63.1579
(21) Tables 1-44

## SECTION E.3 FACILITY OPERATION CONDITIONS

**Emission Unit Description:**

(c) One (1) FCCU regenerator, identified as 500V-5 with an average throughput rate of 380 barrels fresh feed per hour, installed in 1950, controlled by a cyclone and exhausting to stack 10. Under 40 CFR 63, Subpart UUU, process vents on the FCCU are considered affected sources at a petroleum refinery. Under 40 CFR 60, Subpart J, the 500V-5 is considered an affected facility by the Consent Decree as of "Date of Entry" for $SO_2$ and CO.

(s) One (1) CCR Platformer Unit which includes one (1) CCR Platformer Heater, identified as 300 - H1, H2, H3 with a maximum heat input rate of 70.3 mmBtu/hr, combusting refinery fuel gas, installed in 1992 and exhausting to stack 74. Under 40 CFR 63, Subpart UUU, process vents on the CCR are considered affected sources at a petroleum refinery. Under 40 CFR 60, Subpart J, the CCR Platformer Unit, is considered an affected facility. Under 40 CFR 63, Subpart DDDDD, the CCR is considered an affected facility.

(jj) One (1) Hydrotreating Unit Reactor charge heater, identified as 210-H-100, with a maximum heat input rating of 19.25 MMBtu per hour, combusting refinery fuel gas as a primary fuel and natural gas as a back up fuel, and exhausting through one (1) stack identified as 122, constructed in 2005. Under 40 CFR 60, Subpart J, the Hydrotreating Unit Reactor charge heater, is considered an affected facility. Under 40 CFR 63, Subpart DDDDD, the Hydrotreating Unit Reactor charge heater is considered an affected facility.

(kk) One (1) Hydrotreating Unit Reboiler Stabilizer, identified as 210-H-101, with a maximum heat input rating of 19.94 MMBtu per hour, combusting refinery fuel gas as a primary fuel and natural gas as a back up fuel, and exhausting through one (1) stack identified as 123 constructed in 2005. Under 40 CFR 60, Subpart J, the Hydrotreating Unit Reboiler Stabilizer, is considered an affected facility. Under 40 CFR 63, Subpart DDDDD, the Hydrotreating Unit Reboiler Stabilizer is considered an affected facility.

(ll)

(1) One (1) Claus Unit Startup burner (SRU Burner 520-H-101), identified as 124-1, with a maximum heat input rating of 1.54 MMBtu per hour, combusting natural gas, and exhausting through one (1) stack identified as 124-1, constructed in 2005. Under 40 CFR 60, Subpart J, the Claus Unit Startup burner, is considered an affected facility. Under 40 CFR 63, Subpart DDDDD, the Claus Unit Startup burner is considered an affected facility.

(2) One (1) Tail Gas Treating Unit (TGTU) Incinerator burner (Claus~~e~~ Furnace 520-H-102), identified as 124-2, with a maximum heat input rating of 1.29 MMBtu per hour, combusting refinery fuel gas as a primary fuel and natural as a back fuel, and exhausting through one (1) stack identified as 124-2, constructed in 2005. In the event of unscheduled shutdown of the CCR unit, the Sulfur Recovery Unit effluent will be routed directly to the TGTU incinerator. Under 40 CFR 60, Subpart J, the Tail Gas Treating Unit (TGTU) Incinerator burner, is considered an affected facility. Under 40 CFR 63, Subpart DDDDD, the Tail Gas Treating Unit (TGTU) Incinerator burner is considered an affected facility.

(3) One (1) Tail Gas Treating Unit (TGTU) Incinerator (520-H-162), identified as 124-3, with a maximum process flow rate of 48,000 dry standard cubic feet per day, and exhausting through one (1) stack identified as 124-3, constructed in 2005.

(4) One (1) Sour Flare (520-H-163), identified as 124-4, with a maximum burner capacity of 0.92 MMBtu per hour, and a maximum process flow rate of 200 standard cubic feet per

hour, and exhausting through one (1) stack identified as 124-4, constructed in 2005. Under 40 CFR 60, Subpart J, the Sour Flare, is considered an affected facility by the Consent Decree as of March 31, 2013.

(oo) One (1) boiler identified as B4, constructed in 2006, with a maximum heat input rate of 84.9 MMBtu/hr of process gas and/or natural gas, identified as B4 and exhausting to stack 131.

Under the Standards of Performance for Small Industrial-Commercial-Institutional Steam Generating Units NSPS (40 CFR 60, Subpart Dc), the boiler identified as boiler B4 above is considered an affected facility.

Under the Standards of Performance for Petroleum Refineries (40 CFR Part 60, Subpart J), the boiler identified as boiler B4 above, is considered an affected facility. Under 40 CFR 63, Subpart DDDDD, the boiler B4 is considered an affected facility.

(The information describing the process contained in this emissions unit description box is descriptive information and does not constitute enforceable conditions.)

**Emission Limitations and Standards [326 IAC 2-7-5(1)]**

E.3.1 General Provisions Relating to NSPS [326 IAC 12-1-1] [40 CFR 60, Subpart J]

The provisions of 40 CFR Part 60, Subpart A - General Provisions, which are incorporated as 326 IAC 12-1-1, apply to the facility described in this section except when otherwise specified in 40 CFR Part 60, Subpart J.

E.3.2 Standards of Performance for Petroleum Refineries [40 CFR Part 60, Subpart J] [326 IAC 12]

The Permittee shall comply with the provisions of 40 CFR 60, Subpart J - Standards of Performance for Petroleum Refineries, which are incorporated by reference as 326 IAC 12-1-1. This rule is included as Attachment H. This source is subject to the following requirements of 40 CFR Part 60, Subpart J:

(1) 40 CFR 60.100
(2) 40 CFR 60.101
(3) 40 CFR 60.103
(4) 40 CFR 60.104(a)(1), (b)
(5) 40 CFR 60.105(a), (b), (e) (6)
(6) 40 CFR 60.106(a), (d), (e)(1)(i-iii), (f-k)
(7) 40 CFR 60.107(e), (f), (g)
(8) 40 CFR 60.108(a)
(9) 40 CFR 60.109

## SECTION E.4 FACILITY OPERATION CONDITIONS

**Emission Unit Description:**

(d) The following storage vessels:

| Tank ID | Tank Description | Max. Capacity (gallons) | Max. Withdrawal Rate (gal/hr) | Material Stored | Construction Date | NSPS and NESHAP applicability | Stack ID |
|---|---|---|---|---|---|---|---|
| 47 | fixed roof cone tank/internal floating roof tank,/mechanical primary seal | 5,040,000 | 336,000 | hydrocarbon with vapor pressure equal to or less than the vapor pressure of 13 RVP gasoline, | 1976 | 40 CFR Part 60, Subpart K | 058; |
| 52 | fixed roof cone tank | 3,935,148 | 336,000 | hydrocarbon with vapor pressure no higher than the vapor pressure of jet naphtha, | 1976 | 40 CFR Part 60, Subpart K | 063; |

(The information describing the process contained in this emissions unit description box is descriptive information and does not constitute enforceable conditions.)

**Emission Limitations and Standards [326 IAC 2-7-5(1)]**

E.4.1 General Provisions Relating to NSPS [326 IAC 12-1-1] [40 CFR Part 60, Subpart A]

The provisions of 40 CFR Part 60, Subpart A - General Provisions, which are incorporated as 326 IAC 12-1-1, apply to the tanks as specified in Table E.3 as shown above except when otherwise specified in 40 CFR Part 60, Subpart K.

E.4.2 Standards of Performance for Storage Vessels for Petroleum Liquids for Which Construction, Reconstruction, or Modification Commenced After June 11, 1973, and Prior to May 19, 1978 [40 CFR Part 60, Subpart K] [326 IAC 12]

Pursuant to 40 CFR Part 60, Subpart K, the Permittee shall comply with the provisions of Standards of Performance for Storage Vessels for Petroleum Liquids for Which Construction, Reconstruction, or Modification Commenced After June 11, 1973, and Prior to May 19, 1978, which are incorporated by reference as 326 IAC 12-1-1, for the tanks as specified in the table above. A copy of this rule is included as Attachment I. This source is subject to the following requirements of 40 CFR Part 60, Subpart K:

(1) 40 CFR 60.110 (a-c)
(2) 40 CFR 60.111 (a-l)
(3) 40 CFR 60.112 (a)
(4) 40 CFR 60.113 (a)

## SECTION E.5 FACILITY OPERATION CONDITIONS

**Emission Unit Description:**

(d) The following storage vessels:

| Tank ID | Tank Description | Max. Capacity (gallons) | Max. Withdrawal Rate (gal/hr) | Material Stored | Construction Date | NSPS and NESHAP applicability | Stack ID |
|---|---|---|---|---|---|---|---|
| 18 | internal floating roof tank/mechanical primary seal | 1,052,013 | 336,000 | hydrocarbon with vapor pressure equal to or less than the vapor pressure of 13 RVP gasoline, | 2003 | 40 CFR Part 60, Subpart Kb | 037; |
| 24 | fixed roof cone tank/internal floating roof tank/mechanical primary seal | 588,714 | 336,000 | hydrocarbon with vapor pressure equal to or less than the vapor pressure of 13 RVP gasoline, | 1985 | 40 CFR Part 60, Subpart Kb | 037; |
| 24 | fixed roof cone tank/internal floating roof tank/mechanical primary seal | 588,714 | 336,000 | hydrocarbon with vapor pressure equal to or less than the vapor pressure of 13 RVP gasoline, | 1985 | 40 CFR Part 60, Subpart Kb | 037; |
| 175 | fixed roof cone tank/internal floating roof tank/mechanical primary seal | 2,310,000 | 210,000 | Petroleum with vapor pressure equal to or less than the vapor pressure of 13 RVP gasoline, | 2008 | 40 CFR Part 60, Subpart Kb | 130; |

(The information describing the process contained in this emissions unit description box is descriptive information and does not constitute enforceable conditions.)

**Emission Limitations and Standards [326 IAC 2-7-5(1)]**

E.5.1 General Provisions Relating to NSPS [326 IAC 12-1-1] [40 CFR Part 60, Subpart A]

The provisions of 40 CFR Part 60, Subpart A - General Provisions, which are incorporated as 326 IAC 12-1-1, apply to the tanks as specified in the table above except when otherwise specified in 40 CFR Part 60, Subpart Kb.

E.5.2 Standards of Performance for VOC Storage Vessels (Including Petroleum Liquid Storage Vessels) for Which Construction, Reconstruction, or Modification Commenced After July 23, 1984 [40 CFR Part 60, Subpart Kb] [326 IAC 12]

Pursuant to 40 CFR Part 60, Subpart Kb, the Permittee shall comply with the provisions of Standards of Performance for Volatile Organic Liquid Storage Vessels (Including Petroleum Liquid Storage Vessels), which are incorporated by reference as 326 IAC 12-1-1, for the tanks as specified in the table above. A copy of this rule is included as Attachment C. This source is subject to the following requirements of 40 CFR Part 60, Subpart Kb:

(1) 40 CFR 60.110b (a), (b), (d)(1-8), (e)(i-ii), (2), (3), (4)
(2) 40 CFR 60.111b
(3) 40 CFR 60.112b (a)(1(i-ix)), (4)
(4) 40 CFR 60.113b (a)(1-5), (b)(1-4)
(5) 40 CFR 60.114b (a-d)
(6) 40 CFR 60.115b (a-b)
(7) 40 CFR 60.116b (a-d)
(8) 40 CFR 60.117b (a), (b)

## SECTION E.6 FACILITY OPERATION CONDITIONS

**Emission Unit Description:**

The following equipment in VOC service.

(v) Pipeline Valves - Gas, identified as 090; Under 40 CFR 60, Subpart GGG, valves are considered affected sources at a petroleum refinery.

(w) Pipeline Valves - Light Liquid, identified as 091; Under 40 CFR 60, Subpart GGG, valves are considered affected sources at a petroleum refinery.

(x) Pipeline Valves - Heavy Liquid, identified as 092; Under 40 CFR 60, Subpart GGG, valves are considered affected sources at a petroleum refinery.

(y) Pipeline Valves - Hydrogen, identified as 093; Under 40 CFR 60, Subpart GGG, valves are considered affected sources at a petroleum refinery.

(z) Open Ended Valves, identified as 094; Under 40 CFR 60, Subpart GGG, open-ended valves are considered affected sources at a petroleum refinery.

(aa) Flanges, identified as 095; Under 40 CFR 60, Subpart GGG, the flanges are affected considered sources at a petroleum refinery.

(bb) Pump Seals Light Liquid, identified as 096; Under 40 CFR 60, Subpart GGG, equipment associated with the pump is considered an affected source at a petroleum refinery.

(cc) Pump Seals Heavy Liquid, identified as 097; Under 40 CFR 60, Subpart GGG, equipment associated with the pump is considered an affected source at a petroleum refinery.

(dd) Compressor Seals - Gas, identified as 098; Under 40 CFR 60, Subpart GGG, equipment associated with compressor is considered an affected source at a petroleum refinery.

(ee) Compressor Seals - Heavy Liquid, identified as 099; Under 40 CFR 60, Subpart GGG, equipment associated with compressor is considered an affected source at a petroleum refinery.

(gg) Vessel Relief Valves, identified as 101; Under 40 CFR 60, Subpart GGG, pressure relief devices are considered affected sources at a petroleum refinery.

(ii) Process units made up of vessels, piping, exchangers, identified as PENEX. Under 40 CFR 60, Subpart GGG, each valve, pump, pressure relief device, sampling connection system, open-ended valve or line, and flange or other connector is considered an affected source at a petroleum refinery.

(mm) Fugitive emissions from the Hydrotreater unit, Amine Unit, Sulfur Recovery Unit, Tail Gas Treatment Unit consisting of: Under 40 CFR 60, Subpart GGG, each valve, pump, pressure relief device, sampling connection system, open-ended valve or line, and flange or other connector is considered an affected source at a petroleum refinery.

(1) pipeline Valves - Gas, identified as 090.

(2) pipeline Valves - Light Liquid, identified as 091.

(3) pipeline Valves - Heavy Liquid, identified as 092.

(4) pipeline Valves - Hydrogen, identified as 093.

(5) open Ended Valves, identified as 094.

(6) flanges, identified as 095.

(7) pump Seals Light Liquid, identified as 096.

(8) pump Seals Heavy Liquid, identified as 097.

(9) compressor Seals - Gas, identified as 098.

(10) compressor Seals - Heavy Liquid, identified as 099.

(11) vessel Relief Valves, identified as 101.

(The information describing the process contained in this emissions unit description box is descriptive information and does not constitute enforceable conditions.)

**Emission Limitations and Standards [326 IAC 2-7-5(1)]**

E.6.1 General Provisions Relating to NSPS [326 IAC 12-1-1] [40 CFR Part 60, Subpart A]

The provisions of 40 CFR Part 60, Subpart A - General Provisions, which are incorporated as 326 IAC 12-1-1, apply to a facility described in this section when such facility is defined in 40 CFR Part 60, Subpart GGG as an “affected facility,” except when otherwise specified in 40 CFR Part 60, Subpart GGG.

E.6.2 Standards of Performance for Equipment Leaks of VOC in Petroleum Refineries for which Construction, Reconstruction, or Modification Commenced After January 4, 1983, and on or Before November 7, 2006 [40 CFR Part 60, Subpart GGG] [326 IAC 12-1-1]

Pursuant to 40 CFR Part 60, Subpart GGG, the Permittee shall comply with the provisions of Standards of Performance for Equipment Leaks of VOC in Petroleum Refineries for which Construction, Reconstruction, or Modification Commenced After January 4 1983, and on or Before November 7, 2006 which are incorporated by reference as 326 IAC 12-1-1. A copy of this rule is included as Attachment E. This source is subject to the following requirements of 40 CFR Part 60, Subpart GGG:

(1) 40 CFR 60.590
(2) 40 CFR 60.591
(3) 40 CFR 60.592
(4) 40 CFR 60.593

## SECTION E.7 FACILITY OPERATION CONDITIONS

**Emission Unit Description:**

(t) Two (2) sets of Oil/water Separators equipped with covers for VOC control, identified as 071; Under 40 CFR 60, Subpart QQQ, new and existing drains are considered affected sources at a petroleum refinery.

(u) One (1) Miscellaneous operation (Sampling, Blowing, Purging, etc.), identified as 073;

(ff) Drains, identified as 100.

(hh) Cooling Towers, identified as 119.

(The information describing the process contained in this emissions unit description box is descriptive information and does not constitute enforceable conditions.)

**Emission Limitations and Standards [326 IAC 2-7-5(1)]**

E.7.1 General Provisions Relating to NSPS [326 IAC 12-1-1] [40 CFR Part 60, Subpart A]

The provisions of 40 CFR Part 60, Subpart A - General Provisions, which are incorporated as 326 IAC 12-1-1, apply to a facility described in this section when such facility is defined in 40 CFR Part 60, Subpart QQQ as an “affected facility,” except when otherwise specified in 40 CFR Part 60, Subpart QQQ.

E.7.2 Standards of Performance for VOC Emissions from Petroleum Refinery Wastewater Systems [326 IAC 12-1-1][40 CFR Part 60, Subpart QQQ]

Pursuant to 40 CFR Part 60, Subpart QQQ, the Permittee shall comply with the provisions of Standards of Performance for VOC Emissions from Petroleum Refinery Wastewater Systems which are incorporated by reference as 326 IAC 12-1-1. A copy of this rule is included as Attachment F. This source is subject to the following requirements of 40 CFR Part 60, Subpart QQQ:

(1) 40 CFR 60.690
(2) 40 CFR 60.691
(3) 40 CFR 60.692-1
(4) 40 CFR 60.692-3(a)1-5, (c)1-2, (d), (f)
(5) 40 CFR 60.692-5
(6) 40 CFR 60.692-6
(7) 40 CFR 60.692-7
(8) 40 CFR 60.693-2
(9) 40 CFR 60.696(a), (c), (d)(1)(i-iii) (2)(i-ii)
(10) 40 CFR 60.697(a), (c), (e)1-4, (k)1-2
(11) 40 CFR 60.699

## SECTION E.8 FACILITY OPERATION CONDITIONS

**Emission Unit Description:**

(1) All miscellaneous process vents from petroleum refining process units;

(2) All storage vessels associated with petroleum refining process units;

(3) All wastewater streams and treatment operations associated with petroleum refining process units;

(4) All equipment leaks from petroleum refining process units;

(5) All gasoline loading racks classified under Standard Industrial Classification code 2911;

(6) All marine vessel loading operations located at a petroleum refinery; and

(7) All storage vessels and equipment leaks associated with a bulk gasoline terminal or pipeline breakout station classified under Standard Industrial Classification code 2911 located within a contiguous area and under common control with a refinery.

(The information describing the process contained in this facility description box is descriptive information and does not constitute enforceable conditions.)

**Emission Limitations and Standards [326 IAC 2-7-5(1)]**

E.8.1 General Provisions Relating to NESHAP [326 IAC 20-1-1] [40 CFR Part 63, Subpart A]

The provisions of 40 CFR Part 63, Subpart A - General Provisions, which are incorporated as 326 IAC 20-1-1, apply to certain of the tanks described in this section except when otherwise specified in 40 CFR Part 63, Subpart CC.

E.8.2 National Emission Standards for Hazardous Air Pollutants From Petroleum Refineries [326 IAC 20-16-1] [40 CFR Part 63, Subpart CC]

Pursuant to 40 CFR Part 63, Subpart CC, the Permittee shall comply with the provisions of National Emission Standards for Hazardous Air Pollutants From Petroleum Refineries, which are incorporated by reference as 326 IAC 20-16-1. A copy of this rule is included as Attachment D. This source is subject to the following requirements of 40 CFR Part 63, Subpart CC:

(1) 40 CFR 63.640
(2) 40 CFR 63.641
(3) 40 CFR 63.642
(4) 40 CFR 63.643
(5) 40 CFR 63.644
(6) 40 CFR 63.645
(7) 40 CFR 63.646
(8) 40 CFR 63.647
(9) 40 CFR 63.648
(10) 40 CFR 63.649
(11) 40 CFR 63.650
(12) 40 CFR 63.651
(13) 40 CFR 63.652
(14) 40 CFR 63.653
(15) 40 CFR 63.654

## SECTION E.9 FACILITY OPERATION CONDITIONS

**Emission Unit Description:**

(oo) One (1) boiler identified as B4, constructed in 2006, with a maximum heat input rate of 84.9 MMBtu/hr of process gas and/or natural gas, identified as B4 and exhausting to stack 131.

Under the Standards of Performance for Small Industrial-Commercial-Institutional Steam Generating Units NSPS (40 CFR 60, Subpart Dc), the boiler identified as boiler B4 above is considered an affected facility.

Under the Standards of Performance for Petroleum Refineries (40 CFR Part 60, Subpart J), the boiler identified as boiler B4 above, is considered an affected facility. Under 40 CFR 63, Subpart DDDDD, the boiler B4 is considered an affected facility.

(The information describing the process contained in this facility description box is descriptive information and does not constitute enforceable conditions.)

**Emission Limitations and Standards [326 IAC 2-7-5(1)]**

E.9.1 General Provisions Relating to NSPS [326 IAC 12-1] [40 CFR 60, Subpart A]

The provisions of 40 CFR Part 60, Subpart A - General Provisions, which are incorporated by reference in 326 IAC 12-1, apply to the facility described in this section except when otherwise specified in 40 CFR Part 60, Subpart Dc.

E.9.2 Standards of Performance for Small Industrial-Commercial-Institutional Steam Generating Units [40 CFR Part 60, Subpart Dc]

Pursuant to 40 CFR Part 60, Subpart Dc, the Permittee shall comply with the provisions of the National Source Performance Standards for Small Industrial-Commercial- Institutional Steam Generating Units, which are incorporated by reference as 326 IAC 12-1-1, for the boiler specified above. A copy of the rule is included as Attachment G. This source is subject to the following requirements of 40 CFR Part 60, Subpart Dc:

(1) 40 CFR 60.40c(a)
(2) 40 CFR 60.41c
(3) 40 CFR 60.42c(d),(e)1,(g)(h)2,(i),(j)
(4) 40 CFR 60.43c(c), (e)(1,4)
(5) 40 CFR 60.44c(a), (b), (c), (d), (g), (h)
(6) 40 CFR 60.48c(e)11,(f)2i-iv

## SECTION E.10 FACILITY OPERATION CONDITIONS

**Emission Unit Description:**

Under 40 CFR 61, Subpart FF, this stationary petroleum refinery is considered an affected facility.

(The information describing the process contained in this facility description box is descriptive information and does not constitute enforceable conditions.)

**Emission Limitations and Standards [326 IAC 2-7-5(1)]**

E.10.1 General Provisions Relating to NESHAP Subpart FF [40 CFR Part 61, Subpart A]

The provisions of 40 CFR Part 61, Subpart A - General Provisions, which are incorporated by reference in 326 IAC 14-1, apply to this stationary petroleum refinery except when otherwise specified in 40 CFR Part 61, Subpart FF.

E.10.2 Benzene Waste Operations NESHAP [40 CFR Part 61, Subpart FF]

Pursuant to 40 CFR Part 61, Subpart FF, the Permittee shall comply with the National Emission Standards for Benzene Waste Operations which are incorporated as reference as 326 IAC 14-1-1. A copy of this rule is included as Attachment K. This source is subject to the following requirements of 40 CFR Part 61, Subpart FF:

(1) 40 CFR 61.340
(2) 40 CFR 61.341
(3) 40 CFR 61.342(a)
(4) 40 CFR 61.355
(5) 40 CFR 61.356(a)(b)(1),(b)(5)
(6) 40 CFR 61.357(a)(c)

## SECTION E.11 FACILITY OPERATION CONDITIONS

**Emission Unit Description:**

Each valve, pump, pressure relief device, sampling connection system, open-ended valve or line, and flange or other connector in VOC service constructed, reconstructed, or modified after November 7, 2006.

Under 40 CFR 60, Subpart GGGa, these units are considered affected facilities at a petroleum refinery.

(The information describing the process contained in this facility description box is descriptive information and does not constitute enforceable conditions.)

**Emission Limitations and Standards [326 IAC 2-7-5(1)]**

E.11.1 General Provisions Relating to NSPS Subpart GGGa [40 CFR Part 60, Subpart A]

The provisions of 40 CFR Part 60, Subpart A – General Provisions, which are incorporated by reference as 326 IAC 12, apply to the facility described in this section except as otherwise specified in 40 CFR Part 60, Subpart GGGa.

E.11.2 Standards of Performance for Equipment Leaks of VOC in Petroleum Refineries for Which Construction, Reconstruction, or Modification Commenced After November 7, 2006 NSPS [40 CFR Part 60, Subpart GGGa]

Pursuant to 40 CFR Part 60, Subpart GGGa, the Permittee shall comply with the Standards of Performance for Equipment Leaks of VOC in Petroleum Refineries for which Construction, Reconstruction, or Modification Commenced after November 7, 2006 which are incorporated as 326 IAC 12-1-1, for the components specified above. A copy of this rule is included as Attachment J. The source is subject to the following requirements of 40 CFR Part 60, Subpart GGGa:

(1) 40 CFR 60.590a
(2) 40 CFR 60.591a
(3) 40 CFR 60.592a
(4) 40 CFR 60.593a

## SECTION E.12 FACILITY OPERATION CONDITIONS

**Emission Unit Description:**

(e) One (1) Main Refinery Flare, identified as RCD-1 with a maximum heat input rate of 371 MMBtu/hr of refinery fuel gas/process gas (with capacity for a supplementary pilot fuel heat input rate of 3.0 MMBtu/hr), installed in 1945 and replaced in 2006 and exhausting to stack 118;

(q) One (1) natural gas or refinery gas fired boiler, approved in 2014 for construction, identified as boiler B5, with a maximum heat input of 118.14 mmBtu/hr, equipped with low NOx burners, and exhausting to stack 132. Under 40 CFR 60, Subpart Db, the boiler B5 is considered an affected facility. Under 40 CFR 60, Subpart Ja, the boiler B5 is considered an affected facility. Under 40 CFR 63, Subpart DDDDD, the boiler B5 is considered an affected facility.

(ll) One (1) Tail Gas Treatment System and Sulfur Recovery System identified as 124 and consisting of the following: Under 40 CFR 63, Subpart UUU, these facilities and the associated process vents and bypass lines are considered affected sources at a petroleum refinery. Under 40 CFR 60, Subpart Ja, the Tail Gas Treatment System and Sulfur Recovery System, is considered an affected facility by the Consent Decree as of June 3, 2013.

(pp) (1) LSG Reactor Charge Heater, identified as 810-H101, approved for construction in 2008, with a maximum capacity of 5.985 MMBtu, combusting refinery fuel gas only, and venting to stack 128. Under 40 CFR Part 60, Subpart Ja, the LSG Reactor Charge Heater is considered an affected facility. Under 40 CFR 63, Subpart DDDDD, the LSG Reactor Charge Heater is considered an affected facility.

(The information describing the process contained in this facility description box is descriptive information and does not constitute enforceable conditions.)

**Emission Limitations and Standards [326 IAC 2-7-5(1)]**

E.12.1 General Provisions Relating to NSPS Subpart Ja [40 CFR Part 60, Subpart A]

The provisions of 40 CFR Part 60, Subpart A – General Provisions, which are incorporated by reference as 326 IAC 12, apply to the facility described in this section except as otherwise specified in 40 CFR Part 60, Subpart Ja.

E.12.2 Standards of Performance for Petroleum Refineries for Which Construction, Reconstruction, or Modification Commenced After May 14, 2007 NSPS [40 CFR Part 60, Subpart Ja]

Pursuant to 40 CFR Part 60, Subpart Ja, the Permittee comply with the Standards of Performance for Petroleum Refineries for which Construction, Reconstruction, or Modification Commenced after May 14, 2007, for the refinery flare, boiler B5, the Sulfur Recovery Plant, and LSG Reactor Charge Heater specified above. A copy of this rule is included as Attachment L. The source is subject to the following requirements of 40 CFR Part 60, Subpart Ja:

(1) 40 CFR 60.100a
(2) 40 CFR 60.101a
(3) 40 CFR 60.102a (a), (g), (f)(2)
(4) 40 CFR 60.103a
(5) 40 CFR 60.104a
(6) 40 CFR 60.106a
(7) 40 CFR 60.107a
(8) 40 CFR 60.108a
(9) 40 CFR 60.109a

## SECTION E.13 FACILITY OPERATION CONDITIONS

**Emission Unit Description:**

(q) One (1) natural gas or refinery gas fired boiler, approved in 2014 for construction, identified as boiler B5, with a maximum heat input of 118.14 mmBtu/hr, equipped with low NOx burners, and exhausting to stack 132. Under 40 CFR 60, Subpart Db, the boiler B5 is considered an affected facility. Under 40 CFR 60, Subpart Ja, the boiler B5 is considered an affected facility. Under 40 CFR 63, Subpart DDDDD, the boiler B5 is considered an affected facility.

(The information describing the process contained in this facility description box is descriptive information and does not constitute enforceable conditions.)

**Emission Limitations and Standards [326 IAC 2-7-5(1)]**

E.13.1 General Provisions Relating to NSPS [326 IAC 12-1-1] [40 CFR Part 60, Subpart A]

The provisions of 40 CFR Part 60, Subpart A - General Provisions, which are incorporated as 326 IAC 12-1-1, apply to a facility described in this section when such facility is defined in 40 CFR Part 60, Subpart Db as an “affected facility,” except when otherwise specified in 40 CFR Part 60, Subpart Db.

E.13.2 Standards of Performance for Industrial-Commercial-Institutional Steam Generating Units [40 CFR Part 60, Subpart Db] [326 IAC 12-1-1]

Pursuant to 40 CFR Part 60, Subpart Db, the Permittee shall comply with the provisions of Standards of Performance for Industrial-Commercial-Institutional Steam Generating Units which are incorporated by reference as 326 IAC 12-1-1. A copy of this rule is included as Attachment M. This source is subject to the following requirements of 40 CFR Part 60, Subpart Db:

(1) 40 CFR 60.40b (a), (c)
(2) 40 CFR 60.41b
(3) 40 CFR 60.44b (a)(1)(ii), (h), (i)
(4) 40 CFR 60.46b (a), (c), (e)(1), (e)(4)
(5) 40 CFR 60.48b (b), (c), (d), (e)(2), (e)(3), (f), (g)(1)
(6) 40 CFR 60.49b (a)(1), (a)((3), (b), (d), (g), (h)(4), (i), (o), (v), (w)

## SECTION E.14 FACILITY OPERATION CONDITIONS

**Emission Unit Description:**

Insignificant Activities

(e) Emergency generators as follows: Diesel generators not exceeding one thousand six hundred (1,600) horsepower.

(1) One (1) diesel fired emergency generator, approved in 2014 for construction, identified as GenB5, with a maximum heat input of 720 hp (500 KW). [40 CFR 60, Subpart IIII] [40 CFR 63, Subpart ZZZZ]

(2) One (1) diesel fired emergency generator, installed in 2008, identified as 700-P33 North Pond fire pump, with a maximum heat input of 420 hp (298 KW). [40 CFR 60, Subpart IIII] [40 CFR 63, Subpart ZZZZ]

(The information describing the process contained in this facility description box is descriptive information and does not constitute enforceable conditions.)

**Emission Limitations and Standards [326 IAC 2-7-5(1)]**

E.14.1 General Provisions Relating to NSPS [326 IAC 12-1-1] [40 CFR Part 60, Subpart A]

The provisions of 40 CFR Part 60, Subpart A - General Provisions, which are incorporated as 326 IAC 12-1-1, apply to a facility described in this section when such facility is defined in 40 CFR Part 60, Subpart IIII as an “affected facility,” except when otherwise specified in 40 CFR Part 60, Subpart IIII.

E.14.2 Standards of Performance for Sationary Compression Ignition Internal Combustion Engines [40 CFR Part 60, Subpart IIII] [326 IAC 12-1-1]

Pursuant to 40 CFR Part 60, Subpart IIII, the Permittee shall comply with the provisions of Standards of Performance for Stationary Compression Ignition Internal Combustion Engines which are incorporated by reference as 326 IAC 12-1-1. A copy of this rule is included as Attachment N. This source is subject to the following requirements of 40 CFR Part 60, Subpart IIII:

(1) 40 CFR 60.4200
(2) 40 CFR 60.4205 (b), (c)
(3) 40 CFR 60.4206
(4) 40 CFR 60.4207 (a), (b)
(5) 40 cFR 60.4208
(6) 40 CFR 60.4211 (f), (g)
(7) 40 CFR 60.4214 (b), (d)
(8) 40 CFR 60.4218
(9) 40 CFR 60.42.19
(10) Table 4
(11) Table 8

## SECTION E.15 FACILITY OPERATION CONDITIONS

**Emission Unit Description:**

Insignificant Activities

(e) Emergency generators as follows: Diesel generators not exceeding one thousand six hundred (1,600) horsepower.

(1) One (1) diesel fired emergency generator, approved in 2014 for construction, identified as GenB5, with a maximum heat input of 720 hp (500 KW). [40 CFR 60, Subpart IIII] [40 CFR 63, Subpart ZZZZ]

(2) One (1) diesel fired emergency generator, installed in 2008, identified as 700-P33 North Pond fire pump, with a maximum heat input of 420 hp (298 KW). [40 CFR 60, Subpart IIII] [40 CFR 63, Subpart ZZZZ]

(3) One (1) diesel fired emergency generator, installed in 2006, identified as 700-C8 Air Compressor, with a maximum heat input of 130 hp (97 KW). [40 CFR 63, Subpart ZZZZ]

(4) One (1) diesel fired emergency generator, installed in 2006, identified as 700-G2 Boilerhouse, with a maximum heat input of 393 hp (293 KW). [40 CFR 63, Subpart ZZZZ]

(5) One (1) diesel fired emergency generator, installed in 1992, identified as 700-P32 No. 2 Fire Pond pump, with a maximum heat input of 302 hp (225 KW). [40 CFR 63, Subpart ZZZZ]

(6) One (1) diesel fired emergency generator, installed in 1984, identified as 1000-P33B, with a maximum heat input of 240 hp (180 KW). [40 CFR 63, Subpart ZZZZ]

(7) One (1) diesel fired emergency generator, installed in 1967, identified as 700-P31 Golf Course pond pump, with a maximum heat input of 130 hp (97 KW). [40 CFR 63, Subpart ZZZZ]

(The information describing the process contained in this facility description box is descriptive information and does not constitute enforceable conditions.)

**Emission Limitations and Standards [326 IAC 2-7-5(1)]**

E.15.1 General Provisions Relating to NESHAP [326 IAC 20-1-1] [40 CFR 63, Subpart A]

The provisions of 40 CFR Part 63, Subpart A - General Provisions, which are incorporated as 326 IAC 20-1-1, apply to the facility described in this section except when otherwise specified in Table 8 of 40 CFR Part 63, Subpart ZZZZ.

E.15.2 National Emission Standards for Hazardous Air Pollutants for Stationary Reciprocating Internal Combustion Engines [40 CFR Part 63, Subpart ZZZZ] [326 IAC 20-82]

The Permittee shall comply with the provisions of 40 CFR 63, Subpart ZZZZ - National Emission Standards for Hazardous Air Pollutants for Stationary Reciprocating Internal Combustion Engines, which are incorporated by reference as 326 IAC 20-82. This rule is included as Attachment O. This source is subject to the following requirements of 40 CFR Part 63, Subpart ZZZZ:

(1) 40 CFR 63.6580
(2) 40 CFR 63.6585 (a), (b)
(3) 40 CFR 63.6590 (a), (c)

(4) 40 CFR 63.6595 (a)
(5) 40 CFR 63.6602
(6) 40 CFR 63.6604 (b)
(7) 40 CFR 63.6625 (e), (f), (h), (i)
(8) 40 CFR 63.6640 (a), (b), (f)
(9) 40 CFR 63.6645 (f)
(10) 40 CFR 63.6660
(11) 40 CFR 63.6665
(12) 40 CFR 63.6670
(13) 40 CFR 63.6675
(14) Table 2c
(15) Table 6
(16) Table 8

## SECTION E.16 FACILITY OPERATION CONDITIONS

**Emission Unit Description:**

(b) One (1) Fluid Catalytic Cracking Unit (FCCU) Raw Oil Pre-heater, identified as 500-H101 with a maximum heat input rate of 18.1 million British Thermal Units per hour (mmBtu/hr), combusting refinery fuel gas only (no sour water stripper overhead off-gas combustion), installed in 1945 and exhausting to stack 9. Under 40 CFR 63, Subpart DDDDD the Fluid Catalytic Cracking Unit (FCCU) Raw Oil Pre-heater is considered an affected facility.

(f) One (1) Crude heater equipped with a Low-NOx burner, identified as 200-H2 with a maximum heat input rate of 131 mmBtu/hr, combusting refinery fuel gas, installed in 1955 and exhausting to stack 1. Under 40 CFR 63, Subpart DDDDD the Crude heater is considered an affected facility.

(g) One (1) Unifiner heater, identified as 400-H5 with a maximum heat input rate of 20 mmBtu/hr, combusting refinery fuel gas, installed in 1959 and exhausting to stack 2. Under 40 CFR 63, Subpart DDDDD the Unifiner heater is considered an affected facility.

(h) One (1) Cycle oil heater, identified as H-H2 with a maximum heat input rate of 10 mmBtu/hr, combusting refinery fuel gas, installed in 1956 and exhausting to stack 3. Under 40 CFR 63, Subpart DDDDD the Cycle oil heater is considered an affected facility.

(i) One (1) Naphtha splitter heater, identified as 900-H1 with a maximum heat input rate of 12.2 mmBtu/hr, combusting refinery fuel gas, installed in 1956 and exhausting to stack 4. Under 40 CFR 63, Subpart DDDDD the Naphtha splitter heater is considered an affected facility.

(j) One (1) Vacuum heater, identified as 200-H4 with a maximum heat input rate of 14.1 mmBtu/hr, combusting refinery fuel gas, installed in 1950, approved to be modified in 2007, and exhausting to stack 5. Under 40 CFR 63, Subpart DDDDD the Vacuum heater is considered an affected facility.

(k) One (1) Old Platformer heater, identified as Naphtha Splitter Reboiler 900-H2 with a maximum heat input rate of 27 mmBtu/hr, combusting refinery fuel gas, installed in 1956 and exhausting to stack 6. Under 40 CFR 63, Subpart DDDDD the Old Platformer heater is considered an affected facility.

(l) One (1) Alkylation unit heater, identified as 100-H1 with a maximum heat input rate of 13.2 mmBtu/hr, combusting refinery fuel gas and No. 6 residual fuel oil, installed in 1966 and exhausting to stack 7. Under 40 CFR 63, Subpart DDDDD the Alkylation unit heater is considered an affected facility.

(m) One (1) Auxiliary crude heater, identified as 200-H1 with a maximum heat input rate of 10.1 mmBtu/hr, combusting refinery fuel gas, installed in 1966 and exhausting to stack 11. Under 40 CFR 63, Subpart DDDDD the Auxiliary crude heater is considered an affected facility.

(n) One (1) Platformer stabilizer reb, identified as 300-H4 with a maximum heat input rate of 5.92 mmBtu/hr, combusting refinery fuel gas, installed in 1956 and exhausting to stack 12. Under 40 CFR 63, Subpart DDDDD the Platformer stabilizer reb is considered an affected facility.

(o) One (1) no. 1 boiler, with a maximum heat input rate of 52 mmBtu/hr of process gas, identified as B1 and exhausting to stack 8. Under 40 CFR 63, Subpart DDDDD the no. 1 boiler is considered an affected facility.

(p) One (1) no. 2 boiler, with a maximum heat input rate of 65 mmBtu/hr of process gas, identified as B2 and exhausting to stack 13. Under 40 CFR 63, Subpart DDDDD the no. 2 boiler is considered an affected facility.

(q) One (1) natural gas or refinery gas fired boiler, approved in 2014 for construction, identified as boiler B5, with a maximum heat input of 118.14 mmBtu/hr, equipped with low NOx burners, and exhausting to stack 132. Under 40 CFR 60, Subpart Db, the boiler B5 is considered an affected facility. Under 40 CFR 60, Subpart Ja, the boiler B5 is considered an affected facility. Under 40 CFR 63, Subpart DDDDD, the boiler B5 is considered an affected facility.

(r) One (1) Vacuum heater husky, identified as 200-H3 with a maximum heat input rate of 6.27 mmBtu/hr, combusting refinery fuel gas, installed in 1963 and exhausting to stack 64. Under 40 CFR 63, Subpart DDDDD the Vacuum heater husky is considered an affected facility.

(s) One (1) CCR Platformer Unit which includes one (1) CCR Platformer Heater, identified as 300 - H1, H2, H3 with a maximum heat input rate of 70.3 mmBtu/hr, combusting refinery fuel gas, installed in 1992 and exhausting to stack 74. Under 40 CFR 63, Subpart UUU, process vents on the CCR are considered affected sources at a petroleum refinery. Under 40 CFR 60, Subpart J, the CCR Platformer Unit, is considered an affected facility. Under 40 CFR 63, Subpart DDDDD, the CCR is considered an affected facility.

(jj) One (1) Hydrotreating Unit Reactor charge heater, identified as 210-H-100, with a maximum heat input rating of 19.25 MMBtu per hour, combusting refinery fuel gas as a primary fuel and natural gas as a back up fuel, and exhausting through one (1) stack identified as 122, constructed in 2005. Under 40 CFR 60, Subpart J, the Hydrotreating Unit Reactor charge heater, is considered an affected facility. Under 40 CFR 63, Subpart DDDDD, the Hydrotreating Unit Reactor charge heater is considered an affected facility.

(kk) One (1) Hydrotreating Unit Reboiler Stabilizer, identified as 210-H-101, with a maximum heat input rating of 19.94 MMBtu per hour, combusting refinery fuel gas as a primary fuel and natural gas as a back up fuel, and exhausting through one (1) stack identified as 123 constructed in 2005. Under 40 CFR 60, Subpart J, the Hydrotreating Unit Reboiler Stabilizer, is considered an affected facility. Under 40 CFR 63, Subpart DDDDD, the Hydrotreating Unit Reboiler Stabilizer is considered an affected facility.

(ll) One (1) Tail Gas Treatment System and Sulfur Recovery System identified as 124 and consisting of the following: Under 40 CFR 63, Subpart UUU, these facilities and the associated process vents and bypass lines are considered affected sources at a petroleum refinery. Under 40 CFR 60, Subpart Ja, the Tail Gas Treatment System and Sulfur Recovery System, is considered an affected facility by the Consent Decree as of June 3, 2013.

(1) One (1) Claus Unit Startup burner (SRU Burner 520-H-101), identified as 124-1, with a maximum heat input rating of 1.54 MMBtu per hour, combusting natural gas, and exhausting through one (1) stack identified as 124-1, constructed in 2005. Under 40 CFR 60, Subpart J, the Claus Unit Startup burner, is considered an affected facility. Under 40 CFR 63, Subpart DDDDD, the Claus Unit Startup burner is considered an affected facility.

(2) One (1) Tail Gas Treating Unit (TGTU) Incinerator burner (Claus Furnace 520-H-102), identified as 124-2, with a maximum heat input rating of 1.29 MMBtu per hour, combusting refinery fuel gas as a primary fuel and natural as a back fuel, and exhausting through one (1) stack identified as 124-2, constructed in 2005. In the event of unscheduled shutdown of the CCR unit, the Sulfur Recovery Unit effluent will be routed directly to the TGTU incinerator. Under 40 CFR 60, Subpart J, the Tail Gas Treating Unit (TGTU) Incinerator burner, is considered an affected facility. Under 40 CFR 63, Subpart

DDDDD, the Tail Gas Treating Unit (TGTU) Incinerator burner is considered an affected facility.

(nn) One (1) Vacuum heater, identified as 200-H6, with a maximum heat input rate of 5.49 mmBtu/hr, combusting refinery fuel gas and natural gas as a backup, installed in 2005 and exhausting to stack 126. Under 40 CFR 63, Subpart DDDDD, the Vacuum heater is considered an affected facility.

(oo) One (1) boiler identified as B4, constructed in 2006, with a maximum heat input rate of 84.9 MMBtu/hr of process gas and/or natural gas, identified as B4 and exhausting to stack 131.

Under the Standards of Performance for Small Industrial-Commercial-Institutional Steam Generating Units NSPS (40 CFR 60, Subpart Dc), the boiler identified as boiler B4 above is considered an affected facility.

Under the Standards of Performance for Petroleum Refineries (40 CFR Part 60, Subpart J), the boiler identified as boiler B4 above, is considered an affected facility. Under 40 CFR 63, Subpart DDDDD, the boiler B4 is considered an affected facility.

(pp) (1) LSG Reactor Charge Heater, identified as (810-H101), approved for construction in 2008, with a maximum capacity of 5.985 MMBtu, combusting refinery fuel gas only, and venting to stack 128. Under 40 CFR Part 60, Subpart Ja, the LSG Reactor Charge Heater is considered an affected facility. Under 40 CFR 63, Subpart DDDDD, the LSG Reactor Charge Heater is considered an affected facility.

(The information describing the process contained in this facility description box is descriptive information and does not constitute enforceable conditions.)

**Emission Limitations and Standards [326 IAC 2-7-5(1)]**

E.16.1 General Provisions Relating to NESHAP [326 IAC 20-1-1] [40 CFR 63, Subpart A]

The provisions of 40 CFR Part 63, Subpart A - General Provisions, which are incorporated as 326 IAC 20-1-1, apply to the facility described in this section except when otherwise specified in Table 10 of 40 CFR Part 63, Subpart DDDDD.

E.16.2 National Emission Standards for Hazardous Air Pollutants for Major Sources: Industrial, Commercial, and Institutional Boilers and Process Heaters [40 CFR Part 63, Subpart DDDDD] [326 IAC 20-95]

The Permittee shall comply with the provisions of 40 CFR 63, Subpart DDDDD - National Emission Standards for Hazardous Air Pollutants for Major Sources: Industrial, Commercial, and Institutional Boilers and Process Heaters, which are incorporated by reference as 326 IAC 20-95. This rule is included as Attachment P. This source is subject to the following requirements of 40 CFR Part 63, Subpart DDDDD:

(1) 40 CFR 63.7480
(2) 40 CFR 63.7485
(3) 40 CFR 63.7490 (a), (b), (d)
(4) 40 CFR 63.7495 (a), (d), (d)
(5) 40 CFR 63.7499
(6) 40 CFR 63.7500 (a), (e)
(7) 40 CFR 63.7501
(8) 40 CFR 63.7505 (a)
(9) 40 CFR 63.7510 (a – e), (g)
(10) 40 CFR 63.7515
(11) 40 CFR 63.7520

(12) 40 CFR 63.7521 (a), (b), (f)(1)
(13) 40 CFR 63.7525 (a)
(14) 40 CFR 63.7530
(15) 40 CFR 63.7535
(16) 40 CFR 63.7540
(17) 40 CFR 63.7545 (a),(c-e)
(18) 40 CFR 63.7550
(19) 40 CFR 63.7555
(20) 40 CFR 63.7560
(21) 40 CFR 63.7565
(22) 40 CFR 63.7570
(23) 40 CFR 63.7575
(24) Table 2
(24) Table 3
(25) Table 5
(26) Table 7
(27) Table 8)
(28) Table 9
(29) Table 10

# INDIANA DEPARTMENT OF ENVIRONMENTAL MANAGEMENT
# OFFICE OF AIR QUALITY
# PART 70 OPERATING PERMIT
## CERTIFICATION

Source Name: Countrymark Refining and Logistics, LLC
Source Address: 1200 Refinery Road, Mount Vernon, Indiana 47620
Part 70 Permit No.: T129-25424-00003

**This certification shall be included when submitting monitoring, testing reports/results or other documents as required by this permit.**

Please check what document is being certified:

☐ Annual Compliance Certification Letter

☐ Test Result (specify)

☐ Report (specify)

☐ Notification (specify)

☐ Affidavit (specify)

☐ Other (specify)

| |
|---|
| I certify that, based on information and belief formed after reasonable inquiry, the statements and information in the document are true, accurate, and complete. |
| Signature: |
| Printed Name: |
| Title/Position: |
| Phone: |
| Date: |

# INDIANA DEPARTMENT OF ENVIRONMENTAL MANAGEMENT
# OFFICE OF AIR QUALITY

**COMPLIANCE AND ENFORCEMENT BRANCH**
**100 North Senate Avenue**
**MC 61-53 IGCN 1003**
**Indianapolis, Indiana 46204-2251**
**Phone: 317-233-0178**
**Fax: 317-233-6865**

## PART 70 OPERATING PERMIT
## EMERGENCY OCCURRENCE REPORT

Source Name: Countrymark Refining and Logistics, LLC
Source Address: 1200 Refinery Road, Mount Vernon, Indiana 47620
Part 70 Permit No.: T129-25424-00003

**This form consists of 2 pages**

**Page 1 of 2**

☐ This is an emergency as defined in 326 IAC 2-7-1(12)

- The Permittee must notify the Office of Air Quality (OAQ), within four (**4**) business hours (1-800-451-6027 or 317-233-0178, ask for Compliance Section); and
- The Permittee must submit notice in writing or by facsimile within two (**2**) working days (Facsimile Number: 317-233-6865), and follow the other requirements of 326 IAC 2-7-16.

If any of the following are not applicable, mark N/A

| |
|---|
| Facility/Equipment/Operation: |
| Control Equipment: |
| Permit Condition or Operation Limitation in Permit: |
| Description of the Emergency: |
| Describe the cause of the Emergency: |

If any of the following are not applicable, mark N/A

**Page 2 of 2**

| |
|---|
| Date/Time Emergency started: |
| Date/Time Emergency was corrected: |
| Was the facility being properly operated at the time of the emergency? Y N |
| Type of Pollutants Emitted: TSP, PM-10, $SO_2$, VOC, $NO_X$, CO, Pb, other: |
| Estimated amount of pollutant(s) emitted during emergency: |
| Describe the steps taken to mitigate the problem: |
| Describe the corrective actions/response steps taken: |
| Describe the measures taken to minimize emissions: |
| If applicable, describe the reasons why continued operation of the facilities are necessary to prevent imminent injury to persons, severe damage to equipment, substantial loss of capital investment, or loss of product or raw materials of substantial economic value: |

Form Completed by:_____

Title / Position: _____

Date:_____

Phone: _____

# INDIANA DEPARTMENT OF ENVIRONMENTAL MANAGEMENT
# OFFICE OF AIR QUALITY
# COMPLIANCE DATA SECTION

**Part 70 Quarterly Report**

Source Name: Countrymark Refining and Logistics, LLC
Source Address: 1200 Refinery Road, Mount Vernon, Indiana 47620
Part 70 Permit No.: T129-25424-00003
Facility: Boiler B5
Parameter: NOx emissions
Limit: shall not exceed 31.05 tons per twelve (12) consecutive month period, with compliance determined at the end of each month.

QUARTER : YEAR:

| Month | Column 1 | Column 2 | Column 1 + Column 2 |
|---|---|---|---|
| | This Month | Previous 11 Months | 12 Month Total |
| Month 1 | | | |
| Month 2 | | | |
| Month 3 | | | |

☐ No deviation occurred in this quarter.

☐ Deviation/s occurred in this quarter.
Deviation has been reported on:

Submitted by: _____
Title / Position: _____
Signature: _____
Date: _____
Phone: _____

# INDIANA DEPARTMENT OF ENVIRONMENTAL MANAGEMENT
# OFFICE OF AIR QUALITY
# COMPLIANCE DATA SECTION
# PART 70 OPERATING PERMIT
## QUARTERLY DEVIATION AND COMPLIANCE MONITORING REPORT

Source Name: Countrymark Refining and Logistics, LLC
Source Address: 1200 Refinery Road, Mount Vernon, Indiana 47620
Part 70 Permit No.: T129-25424-00003

**Months: _____to _____Year: ____**



| | |
|---|---|
| This report shall be submitted quarterly based on a calendar year. Proper notice submittal under Section B –Emergency Provisions satisfies the reporting requirements of paragraph (a) of Section C-General Reporting. Any deviation from the requirements of this permit, the date(s) of each deviation, the probable cause of the deviation, and the response steps taken must be reported. A deviation required to be reported pursuant to an applicable requirement that exists independent of the permit, shall be reported according to the schedule stated in the applicable requirement and does not need to be included in this report. Additional pages may be attached if necessary. If no deviations occurred, please specify in the box marked "No deviations occurred this reporting period". | |
| ☐ NO DEVIATIONS OCCURRED THIS REPORTING PERIOD. | |
| ☐ THE FOLLOWING DEVIATIONS OCCURRED THIS REPORTING PERIOD | |
| **Permit Requirement** (specify permit condition #) | |
| **Date of Deviation:** | **Duration of Deviation:** |
| **Number of Deviations:** | |
| **Probable Cause of Deviation:** | |
| **Response Steps Taken:** | |
| **Permit Requirement** (specify permit condition #) | |
| **Date of Deviation:** | **Duration of Deviation:** |
| **Number of Deviations:** | |
| **Probable Cause of Deviation:** | |
| **Response Steps Taken:** | |

| | |
|---|---|
| **Permit Requirement** (specify permit condition #) | |
| **Date of Deviation:** | **Duration of Deviation:** |
| **Number of Deviations:** | |
| **Probable Cause of Deviation:** | |
| **Response Steps Taken:** | |
| **Permit Requirement** (specify permit condition #) | |
| **Date of Deviation:** | **Duration of Deviation:** |
| **Number of Deviations:** | |
| **Probable Cause of Deviation:** | |
| **Response Steps Taken:** | |
| **Permit Requirement** (specify permit condition #) | |
| **Date of Deviation:** | **Duration of Deviation:** |
| **Number of Deviations:** | |
| **Probable Cause of Deviation:** | |
| **Response Steps Taken:** | |

Form Completed by:_____

Title / Position: _____

Date:_____

Phone: _____

**Attachment A**
**To Part 70 Operating Permit Renewal No. T129-25424-00003**

[Downloaded from the eCFR on May 20, 2013]

**Electronic Code of Federal Regulations**

**Title 40: Protection of Environment**

**40 CFR 63, Subpart R—National Emission Standards for Gasoline Distribution Facilities (Bulk Gasoline Terminals and Pipeline Breakout Stations)**

Source: 59 FR 64318, Dec. 14, 1994, unless otherwise noted.

**§ 63.420 Applicability.**

(a) The affected source to which the provisions of this subpart apply is each bulk gasoline terminal, except those bulk gasoline terminals:

(1) For which the owner or operator has documented and recorded to the Administrator's satisfaction that the result, $E_T$ , of the following equation is less than 1, and complies with requirements in paragraphs (c), (d), (e), and (f) of this section:

$E_T$ =CF[0.59($T_F$ )(1-CE)+0.17 ($T_E$ )+0.08($T_{ES}$ )+0.038($T_I$ )+8.5×10-6(C)+KQ]+0.04(OE)

where:

$E_T$ = emissions screening factor for bulk gasoline terminals;

CF=0.161 for bulk gasoline terminals and pipeline breakout stations that do not handle any reformulated or oxygenated gasoline containing 7.6 percent by volume or greater methyl tert-butyl ether (MTBE), OR

CF=1.0 for bulk gasoline terminals and pipeline breakout stations that handle reformulated or oxygenated gasoline containing 7.6 percent by volume or greater MTBE;

CE=control efficiency limitation on potential to emit for the vapor processing system used to control emissions from fixed-roof gasoline storage vessels [value should be added in decimal form (percent divided by 100)];

$T_F$ = total number of fixed-roof gasoline storage vessels without an internal floating roof;

$T_E$ = total number of external floating roof gasoline storage vessels with only primary seals;

$T_{ES}$ = total number of external floating roof gasoline storage vessels with primary and secondary seals;

$T_I$ = total number of fixed-roof gasoline storage vessels with an internal floating roof;

C = number of valves, pumps, connectors, loading arm valves, and open-ended lines in gasoline service;

Q=gasoline throughput limitation on potential to emit or gasoline throughput limit in compliance with paragraphs (c), (d), and (f) of this section (liters/day);

K = $4.52\times10^{-6}$ for bulk gasoline terminals with uncontrolled loading racks (no vapor collection and processing systems), *OR*

$K = (4.5\times10^{-9})(EF + L)$ for bulk gasoline terminals with controlled loading racks (loading racks that have vapor collection and processing systems installed on the emission stream);

EF=emission rate limitation on potential to emit for the gasoline cargo tank loading rack vapor processor outlet emissions (mg of total organic compounds per liter of gasoline loaded);

OE=other HAP emissions screening factor for bulk gasoline terminals or pipeline breakout stations (tons per year). OE equals the total HAP from other emission sources not specified in parameters in the equations for $E_T$ or $E_P$ . If the value of 0.04(OE) is greater than 5 percent of either $E_T$ or $E_P$ , then paragraphs (a)(1) and (b)(1) of this section shall not be used to determine applicability;

L = 13 mg/l for gasoline cargo tanks meeting the requirement to satisfy the test criteria for a vapor-tight gasoline tank truck in § 60.501 of this chapter, *OR*

L = 304 mg/l for gasoline cargo tanks not meeting the requirement to satisfy the test criteria for a vapor-tight gasoline tank truck in § 60.501 of this chapter; or

(2) For which the owner or operator has documented and recorded to the Administrator's satisfaction that the facility is not a major source, or is not located within a contiguous area and under common control of a facility that is a major source, as defined in § 63.2 of subpart A of this part.

(b) The affected source to which the provisions of this subpart apply is each pipeline breakout station, except those pipeline breakout stations:

(1) For which the owner or operator has documented and recorded to the Administrator's satisfaction that the result, $E_P$ , of the following equation is less than 1, and complies with requirements in paragraphs (c), (d), (e), and (f) of this section:

$E_P = CF\,[6.7(T_F)(1-CE) + 0.21(T_E) + 0.093(T_{ES}) + 0.1(T_I) + 5.31\times10^{-6}(C)) + 0.04(OE)$;

where:

EP=emissions screening factor for pipeline breakout stations,

and the definitions for CF, $T_F$ , CE, $T_E$ , $T_{ES}$ , TI, C, and OE are the same as provided in paragraph (a)(1) of this section; or

(2) For which the owner or operator has documented and recorded to the Administrator's satisfaction that the facility is not a major source, or is not located within a contiguous area and under common control of a facility that is a major source, as defined in § 63.2 of subpart A of this part.

(c) A facility for which the results, $E_T$ or $E_P$ , of the calculation in paragraph (a)(1) or (b)(1) of this section has been documented and is less than 1.0 but greater than or equal to 0.50, is exempt from the requirements of this subpart, except that the owner or operator shall:

(1) Operate the facility such that none of the facility parameters used to calculate results under paragraph (a)(1) or (b)(1) of this section, and approved by the Administrator, is exceeded in any rolling 30-day period; and

(2) Maintain records and provide reports in accordance with the provisions of § 63.428(i).

(d) A facility for which the results, $E_T$ or $E_P$ , of the calculation in paragraph (a)(1) or (b)(1) of this section has been documented and is less than 0.50, is exempt from the requirements of this subpart, except that the owner or operator shall:

(1) Operate the facility such that none of the facility parameters used to calculate results under paragraph (a)(1) or (b)(1) of this section is exceeded in any rolling 30-day period; and

(2) Maintain records and provide reports in accordance with the provisions of § 63.428(j).

(e) The provisions of paragraphs (a)(1) and (b)(1) of this section shall not be used to determine applicability to bulk gasoline terminals or pipeline breakout stations that are either:

(1) Located within a contiguous area and under common control with another bulk gasoline terminal or pipeline breakout station, or

(2) Located within a contiguous area and under common control with other sources not specified in paragraphs (a)(1) or (b)(1) of this section, that emit or have the potential to emit a hazardous air pollutant.

(f) Upon request by the Administrator, the owner or operator of a bulk gasoline terminal or pipeline breakout station subject to the provisions of any paragraphs in this section including, but not limited to, the parameters and assumptions used in the applicable equation in paragraph (a)(1) or (b)(1) of this section, shall demonstrate compliance with those paragraphs.

(g) Each owner or operator of a bulk gasoline terminal or pipeline breakout station subject to the provisions of this subpart that is also subject to applicable provisions of 40 CFR part 60, subpart Kb or XX of this chapter shall comply only with the provisions in each subpart that contain the most stringent control requirements for that facility.

(h) Each owner or operator of an affected source bulk gasoline terminal or pipeline breakout station is subject to the provisions of 40 CFR part 63, subpart A—General Provisions, as indicated in Table 1.

(i) A bulk gasoline terminal or pipeline breakout station with a Standard Industrial Classification code 2911 located within a contiguous area and under common control with a refinery complying with subpart CC, §§ 63.646, 63.648, 63.649, and 63.650 is not subject to subpart R standards, except as specified in subpart CC, § 63.650.

(j) *Rules stayed for reconsideration.* Notwithstanding any other provision of this subpart, the December 14, 1995 compliance date for existing facilities in § 63.424(e) and § 63.428(a), (i)(1), and (j)(1) of this subpart is stayed from December 8, 1995, to March 7, 1996.

[59 FR 64318, Dec. 14, 1994, as amended at 60 FR 43260, Aug. 18, 1995; 60 FR 62992, Dec. 8, 1995; 62 FR 9092, Feb. 28, 1997]

**§ 63.421 Definitions.**

As used in this subpart, all terms not defined herein shall have the meaning given them in the Act; in subparts A, K, Ka, Kb, and XX of part 60 of this chapter; or in subpart A of this part. All terms defined in both subpart A of part 60 of this chapter and subpart A of this part shall have the meaning given in subpart A of this part. For purposes of this subpart, definitions in this section supersede definitions in other parts or subparts.

*Bulk gasoline terminal* means any gasoline facility which receives gasoline by pipeline, ship or barge, and has a gasoline throughput greater than 75,700 liters per day. Gasoline throughput shall be the maximum calculated design throughput as may be limited by compliance with an enforceable condition under Federal, State or local law and discoverable by the Administrator and any other person.

*Controlled loading rack,* for the purposes of § 63.420, means a loading rack equipped with vapor collection and processing systems that reduce displaced vapor emissions to no more than 80 milligrams of total organic compounds per liter of gasoline loaded, as measured using the test methods and procedures in § 60.503 (a) through (c) of this chapter.

*Equipment* means each valve, pump, pressure relief device, sampling connection system, open-ended valve or line, and flange or other connector in the gasoline liquid transfer and vapor collection systems. This definition also includes the entire vapor processing system except the exhaust port(s) or stack(s).

*Flare* means a thermal oxidation system using an open (without enclosure) flame.

*Gasoline cargo tank* means a delivery tank truck or railcar which is loading gasoline or which has loaded gasoline on the immediately previous load.

*In gasoline service* means that a piece of equipment is used in a system that transfers gasoline or gasoline vapors.

*Limitation(s) on potential to emit* means limitation(s) limiting a source's potential to emit as defined in § 63.2 of subpart A of this part.

*Operating parameter value* means a value for an operating or emission parameter of the vapor processing system (e.g., temperature) which, if maintained continuously by itself or in combination with one or more other operating parameter values, determines that an owner or operator has complied with the applicable emission standard. The operating parameter value is determined using the procedures outlined in § 63.425(b).

*Oxygenated gasoline* means the same as defined in 40 CFR 80.2(rr).

*Pipeline breakout station* means a facility along a pipeline containing storage vessels used to relieve surges or receive and store gasoline from the pipeline for reinjection and continued transportation by pipeline or to other facilities.

*Reformulated gasoline* means the same as defined in 40 CFR 80.2(ee).

*Thermal oxidation system* means a combustion device used to mix and ignite fuel, air pollutants, and air to provide a flame to heat and oxidize hazardous air pollutants. Auxiliary fuel may be used to heat air pollutants to combustion temperatures.

*Uncontrolled loading rack* means a loading rack used to load gasoline cargo tanks that is not a controlled loading rack.

*Vapor-tight gasoline cargo tank* means a gasoline cargo tank which has demonstrated within the 12 preceding months that it meets the annual certification test requirements in § 63.425(e), and which is subject at all times to the test requirements in § 63.425 (f), (g), and (h).

*Volatile organic liquid* (VOL) means, for the purposes of this subpart, gasoline.

[59 FR 64318, Dec. 14, 1994, as amended at 62 FR 9093, Feb. 28, 1997; 68 FR 70965, Dec. 19, 2003]

**§ 63.422 Standards: Loading racks.**

(a) Each owner or operator of loading racks at a bulk gasoline terminal subject to the provisions of this subpart shall comply with the requirements in § 60.502 of this chapter except for paragraphs (b), (c), and (j) of that section. For purposes of this section, the term “affected facility” used in § 60.502 of this chapter means the loading racks that load gasoline cargo tanks at the bulk gasoline terminals subject to the provisions of this subpart.

(b) Emissions to the atmosphere from the vapor collection and processing systems due to the loading of gasoline cargo tanks shall not exceed 10 milligrams of total organic compounds per liter of gasoline loaded.

(c) Each owner or operator of a bulk gasoline terminal subject to the provisions of this subpart shall comply with § 60.502(e) of this chapter as follows:

(1) For the purposes of this section, the term “tank truck” as used in § 60.502(e) of this chapter means “cargo tank.”

(2) Section 60.502(e)(5) of this chapter is changed to read: The terminal owner or operator shall take steps assuring that the nonvapor-tight gasoline cargo tank will not be reloaded at the facility until vapor tightness documentation for that gasoline cargo tank is obtained which documents that:

(i) The tank truck or railcar gasoline cargo tank meets the test requirements in § 63.425(e), or the railcar gasoline cargo tank meets applicable test requirements in § 63.425(i);

(ii) For each gasoline cargo tank failing the test in § 63.425 (f) or (g) at the facility, the cargo tank either:

(A) Before repair work is performed on the cargo tank, meets the test requirements in § 63.425 (g) or (h), or

(B) After repair work is performed on the cargo tank before or during the tests in § 63.425 (g) or (h), subsequently passes the annual certification test described in § 63.425(e).

(d) Each owner or operator shall meet the requirements in all paragraphs of this section as expeditiously as practicable, but no later than December 15, 1997, at existing facilities and upon startup for new facilities.

(e) As an alternative to 40 CFR 60.502(h) and (i) as specified in paragraph (a) of this section, the owner or operator may comply with paragraphs (e)(1) and (2) of this section.

(1) The owner or operator shall design and operate the vapor processing system, vapor collection system, and liquid loading equipment to prevent gauge pressure in the railcar gasoline cargo tank from exceeding the applicable test limits in § 63.425(e) and (i) during product loading. This level is not to be exceeded when measured by the procedures specified in 40 CFR 60.503(d) of this chapter.

(2) No pressure-vacuum vent in the bulk gasoline terminal's vapor processing system or vapor collection system may begin to open at a system pressure less than the applicable test limits in § 63.425(e) or (i).

[59 FR 64318, Dec. 14, 1994; 60 FR 32913, June 26, 1995, as amended at 68 FR 70965, Dec. 19, 2003]

**§ 63.423 Standards: Storage vessels.**

(a) Each owner or operator of a bulk gasoline terminal or pipeline breakout station subject to the provisions of this subpart shall equip each gasoline storage vessel with a design capacity greater than or equal to 75 $m^3$ according to the requirements in § 60.112b(a) (1) through (4) of this chapter, except for the requirements in §§ 60.112b(a)(1) (iv) through (ix) and 60.112b(a)(2)(ii) of this chapter.

(b) Each owner or operator shall equip each gasoline external floating roof storage vessel with a design capacity greater than or equal to 75 $m^3$ according to the requirements in § 60.112b(a)(2)(ii) of this chapter if such storage vessel does not currently meet the requirements in paragraph (a) of this section.

(c) Each gasoline storage vessel at existing bulk gasoline terminals and pipeline breakout stations shall be in compliance with the requirements in paragraphs (a) and (b) of this section as expeditiously as practicable, but no later than December 15, 1997. At new bulk gasoline terminals and pipeline breakout stations, compliance shall be achieved upon startup.

**§ 63.424 Standards: Equipment leaks.**

(a) Each owner or operator of a bulk gasoline terminal or pipeline breakout station subject to the provisions of this subpart shall perform a monthly leak inspection of all equipment in gasoline service. For this inspection, detection methods incorporating sight, sound, and smell are acceptable. Each piece of equipment shall be inspected during the loading of a gasoline cargo tank.

(b) A log book shall be used and shall be signed by the owner or operator at the completion of each inspection. A section of the log shall contain a list, summary description, or diagram(s) showing the location of all equipment in gasoline service at the facility.

(c) Each detection of a liquid or vapor leak shall be recorded in the log book. When a leak is detected, an initial attempt at repair shall be made as soon as practicable, but no later than 5 calendar days after the leak is detected.

Repair or replacement of leaking equipment shall be completed within 15 calendar days after detection of each leak, except as provided in paragraph (d) of this section.

(d) Delay of repair of leaking equipment will be allowed upon a demonstration to the Administrator that repair within 15 days is not feasible. The owner or operator shall provide the reason(s) a delay is needed and the date by which each repair is expected to be completed.

(e) Initial compliance with the requirements in paragraphs (a) through (d) of this section shall be achieved by existing sources as expeditiously as practicable, but no later than December 15, 1997. For new sources, initial compliance shall be achieved upon startup.

(f) As an alternative to compliance with the provisions in paragraphs (a) through (d) of this section, owners or operators may implement an instrument leak monitoring program that has been demonstrated to the Administrator as at least equivalent.

(g) Owners and operators shall not allow gasoline to be handled in a manner that would result in vapor releases to the atmosphere for extended periods of time. Measures to be taken include, but are not limited to, the following:

(1) Minimize gasoline spills;

(2) Clean up spills as expeditiously as practicable;

(3) Cover all open gasoline containers with a gasketed seal when not in use;

(4) Minimize gasoline sent to open waste collection systems that collect and transport gasoline to reclamation and recycling devices, such as oil/water separators.

[59 FR 64318, Dec. 14, 1994, as amended at 61 FR 7723, Feb. 29, 1996]

**§ 63.425 Test methods and procedures.**

(a) Each owner or operator subject to the emission standard in § 63.422(b) or 40 CFR 60.112b(a)(3)(ii) shall comply with the requirements in paragraphs (a)(1) and (2) of this section.

(1) Conduct a performance test on the vapor processing and collection systems according to either paragraph (a)(1)(i) or (ii) of this section.

(i) Use the test methods and procedures in 40 CFR 60.503 of this chapter, except a reading of 500 ppm shall be used to determine the level of leaks to be repaired under 40 CFR 60.503(b), or

(ii) Use alternative test methods and procedures in accordance with the alternative test method requirements in § 63.7(f).

(2) The performance test requirements of 40 CFR 60.503(c) do not apply to flares defined in § 63.421 and meeting the flare requirements in § 63.11(b). The owner or operator shall demonstrate that the flare and associated vapor collection system is in compliance with the requirements in § 63.11(b) and 40 CFR 60.503(a), (b), and (d), respectively.

(b) For each performance test conducted under paragraph (a) of this section, the owner or operator shall determine a monitored operating parameter value for the vapor processing system using the following procedure:

(1) During the performance test, continuously record the operating parameter under § 63.427(a);

(2) Determine an operating parameter value based on the parameter data monitored during the performance test, supplemented by engineering assessments and the manufacturer's recommendations; and

(3) Provide for the Administrator's approval the rationale for the selected operating parameter value, and monitoring frequency and averaging time, including data and calculations used to develop the value and a description of why the value, monitoring frequency, and averaging time demonstrate continuous compliance with the emission standard in § 63.422(b) or § 60.112b(a)(3)(ii) of this chapter.

(c) For performance tests performed after the initial test, the owner or operator shall document the reasons for any change in the operating parameter value since the previous performance test.

(d) The owner or operator of each gasoline storage vessel subject to the provisions of § 63.423 shall comply with § 60.113b of this chapter. If a closed vent system and control device are used, as specified in § 60.112b(a)(3) of this chapter, to comply with the requirements in § 63.423, the owner or operator shall also comply with the requirements in paragraph (b) of this section.

(e) *Annual certification test.* The annual certification test for gasoline cargo tanks shall consist of the following test methods and procedures:

(1) Method 27, appendix A, 40 CFR part 60. Conduct the test using a time period (t) for the pressure and vacuum tests of 5 minutes. The initial pressure ($P_i$ ) for the pressure test shall be 460 mm $H_2$ O (18 in. $H_2$ O), gauge. The initial vacuum ($V_i$ ) for the vacuum test shall be 150 mm $H_2$ O (6 in. $H_2$ O), gauge. The maximum allowable pressure and vacuum changes (Δ p, Δ v) are as shown in the second column of Table 2 of this paragraph.

Table 2—Allowable Cargo Tank Test Pressure or Vacuum Change

| **Cargo tank or compartment capacity, liters (gal)** | **Annual certification-allowable pressure or vacuum change (Δ p, Δ v) in 5 minutes, mm $H_2O$ (in. $H_2O$)** | **Allowable pressure change (Δ p) in 5 minutes at any time, mm $H_2O$ (in. $H_2O$)** |
|---|---|---|
| 9,464 or more (2,500 or more) | 25 (1.0) | 64 (2.5) |
| 9,463 to 5,678 (2,499 to 1,500) | 38 (1.5) | 76 (3.0) |
| 5,679 to 3,785 (1,499 to 1,000) | 51 (2.0) | 89 (3.5) |
| 3,782 or less (999 or less) | 64 (2.5) | 102 (4.0) |

(2) Pressure test of the cargo tank's internal vapor valve as follows:

(i) After completing the tests under paragraph (e)(1) of this section, use the procedures in Method 27 to repressurize the tank to 460 mm $H_2$ O (18 in. $H_2$ O), gauge. Close the tank's internal vapor valve(s), thereby isolating the vapor return line and manifold from the tank.

(ii) Relieve the pressure in the vapor return line to atmospheric pressure, then reseal the line. After 5 minutes, record the gauge pressure in the vapor return line and manifold. The maximum allowable 5-minute pressure increase is 130 mm $H_2$ O (5 in. $H_2$ O).

(f) *Leak detection test.* The leak detection test shall be performed using Method 21, appendix A, 40 CFR part 60, except omit section 4.3.2 of Method 21. A vapor-tight gasoline cargo tank shall have no leaks at any time when tested according to the procedures in this paragraph.

(1) The leak definition shall be 21,000 ppm as propane. Use propane to calibrate the instrument, setting the span at the leak definition. The response time to 90 percent of the final stable reading shall be less than 8 seconds for the detector with the sampling line and probe attached.

(2) In addition to the procedures in Method 21, include the following procedures:

(i) Perform the test on each compartment during loading of that compartment or while the compartment is still under pressure.

(ii) To eliminate a positive instrument drift, the dwell time for each leak detection shall not exceed two times the instrument response time. Purge the instrument with ambient air between each leak detection. The duration of the purge shall be in excess of two instrument response times.

(iii) Attempt to block the wind from the area being monitored. Record the highest detector reading and location for each leak.

(g) *Nitrogen pressure decay field test.* For those cargo tanks with manifolded product lines, this test procedure shall be conducted on each compartment.

(1) Record the cargo tank capacity. Upon completion of the loading operation, record the total volume loaded. Seal the cargo tank vapor collection system at the vapor coupler. The sealing apparatus shall have a pressure tap. Open the internal vapor valve(s) of the cargo tank and record the initial headspace pressure. Reduce or increase, as necessary, the initial headspace pressure to 460 mm $H_2O$ (18.0 in. $H_2O$), gauge by releasing pressure or by adding commercial grade nitrogen gas from a high pressure cylinder capable of maintaining a pressure of 2,000 psig.

(i) The cylinder shall be equipped with a compatible two-stage regulator with a relief valve and a flow control metering valve. The flow rate of the nitrogen shall be no less than 2 cfm. The maximum allowable time to pressurize cargo tanks with headspace volumes of 1,000 gallons or less to the appropriate pressure is 4 minutes. For cargo tanks with a headspace of greater than 1,000 gallons, use as a maximum allowable time to pressurize 4 minutes or the result from the equation below, whichever is greater.

$T = V_h \times 0.004$

where:

T = maximum allowable time to pressurize the cargo tank, min;

$V_h$ = cargo tank headspace volume during testing, gal.

(2) It is recommended that after the cargo tank headspace pressure reaches approximately 460 mm $H_2O$ (18 in. $H_2$ 0), gauge, a fine adjust valve be used to adjust the headspace pressure to 460 mm $H_2O$ (18.0 in. $H_2O$), gauge for the next 30 ±5 seconds.

(3) Reseal the cargo tank vapor collection system and record the headspace pressure after 1 minute. The measured headspace pressure after 1 minute shall be greater than the minimum allowable final headspace pressure ($P_F$ ) as calculated from the following equation:

$$P_F = 18\left(\frac{(18-N)}{18}\right)^{\left(\frac{V_s}{5(V_h)}\right)}$$

where:

($P_F$ ) = minimum allowable final headspace pressure, in. $H_2O$, gauge;

$V_s$ = total cargo tank shell capacity, gal;

$V_h$ = cargo tank headspace volume after loading, gal;

18.0 = initial pressure at start of test, in. $H_2O$, gauge;

N = 5-minute continuous performance standard at any time from the third column of Table 2 of § 63.425(e)(i), inches $H_2O$.

(4) Conduct the internal vapor valve portion of this test by repressurizing the cargo tank headspace with nitrogen to 460 mm $H_2O$ (18 in. $H_2O$), gauge. Close the internal vapor valve(s), wait for 30 ±5 seconds, then relieve the pressure downstream of the vapor valve in the vapor collection system to atmospheric pressure. Wait 15 seconds, then reseal the vapor collection system. Measure and record the pressure every minute for 5 minutes. Within 5 seconds of the pressure measurement at the end of 5 minutes, open the vapor valve and record the headspace pressure as the "final pressure."

(5) If the decrease in pressure in the vapor collection system is less than at least one of the interval pressure change values in Table 3 of this paragraph, or if the final pressure is equal to or greater than 20 percent of the 1-minute final headspace pressure determined in the test in paragraph (g)(3) of this section, then the cargo tank is considered to be a vapor-tight gasoline cargo tank.

Table 3—Pressure Change for Internal Vapor Valve Test

| Time interval | Interval pressure change, mm $H_2O$ (in. $H_2O$) |
|---|---|
| After 1 minute | 28 (1.1) |
| After 2 minutes | 56 (2.2) |
| After 3 minutes | 84 (3.3) |
| After 4 minutes | 112 (4.4) |
| After 5 minutes | 140 (5.5) |

(h) *Continuous performance pressure decay test.* The continuous performance pressure decay test shall be performed using Method 27, appendix A, 40 CFR Part 60. Conduct only the positive pressure test using a time period (t) of 5 minutes. The initial pressure ($P_i$) shall be 460 mm $H_2O$ (18 in. $H_2O$), gauge. The maximum allowable 5-minute pressure change ($\Delta p$) which shall be met at any time is shown in the third column of Table 2 of § 63.425(e)(1).

(i) *Railcar bubble leak test procedures.* As an alternative to paragraph (e) of this section for annual certification leakage testing of gasoline cargo tanks, the owner or operator may comply with paragraphs (i)(1) and (2) of this section for railcar gasoline cargo tanks, provided the railcar tank meets the requirement in paragraph (i)(3) of this section.

(1) Comply with the requirements of 49 CFR 173.31(d), 179.7, 180.509, and 180.511 for the testing of railcar gasoline cargo tanks.

(2) The leakage pressure test procedure required under 49 CFR 180.509(j) and used to show no indication of leakage under 49 CFR 180.511(f) shall be ASTM E 515-95 (incorporated by reference, see § 63.14), BS EN 1593:1999 (incorporated by reference, see § 63.14), or another bubble leak test procedure meeting the requirements in 49 CFR 179.7, 180.505, and 180.509.

(3) The alternative requirements in this paragraph (i) may not be used for any railcar gasoline cargo tank that collects gasoline vapors from a vapor balance system permitted under or required by a Federal, State, local, or tribal agency. A vapor balance system is a piping and collection system designed to collect gasoline vapors displaced from a storage vessel, barge, or other container being loaded, and routes the displaced gasoline vapors into the railcar gasoline cargo tank from which liquid gasoline is being unloaded.

[59 FR 64318, Dec. 14, 1994; 60 FR 7627, Feb. 8, 1995; 60 FR 32913, June 26, 1995; 68 FR 70965, Dec. 19, 2003]

**§ 63.426 Alternative means of emission limitation.**

For determining the acceptability of alternative means of emission limitation for storage vessels under § 63.423, the provisions of § 60.114b of this chapter apply.

**§ 63.427 Continuous monitoring.**

(a) Each owner or operator of a bulk gasoline terminal subject to the provisions of this subpart shall install, calibrate, certify, operate, and maintain, according to the manufacturer's specifications, a continuous monitoring system (CMS) as specified in paragraph (a)(1), (a)(2), (a)(3), or (a)(4) of this section, except as allowed in paragraph (a)(5) of this section.

(1) Where a carbon adsorption system is used, a continuous emission monitoring system (CEMS) capable of measuring organic compound concentration shall be installed in the exhaust air stream.

(2) Where a refrigeration condenser system is used, a continuous parameter monitoring system (CPMS) capable of measuring temperature shall be installed immediately downstream from the outlet to the condenser section. Alternatively, a CEMS capable of measuring organic compound concentration may be installed in the exhaust air stream.

(3) Where a thermal oxidation system other than a flare is used, a CPMS capable of measuring temperature must be installed in the firebox or in the ductwork immediately downstream from the firebox in a position before any substantial heat exchange occurs.

(4) Where a flare meeting the requirements in § 63.11(b) is used, a heat-sensing device, such as an ultraviolet beam sensor or a thermocouple, must be installed in proximity to the pilot light to indicate the presence of a flame.

(5) Monitoring an alternative operating parameter or a parameter of a vapor processing system other than those listed in this paragraph will be allowed upon demonstrating to the Administrator's satisfaction that the alternative parameter demonstrates continuous compliance with the emission standard in § 63.422(b) or § 60.112b(a)(3)(ii) of this chapter.

(b) Each owner or operator of a bulk gasoline terminal subject to the provisions of this subpart shall operate the vapor processing system in a manner not to exceed the operating parameter value for the parameter described in paragraphs (a)(1) and (a)(2) of this section, or to go below the operating parameter value for the parameter described in paragraph (a)(3) of this section, and established using the procedures in § 63.425(b). In cases where an alternative parameter pursuant to paragraph (a)(5) of this section is approved, each owner or operator shall operate the vapor processing system in a manner not to exceed or not to go below, as appropriate, the alternative operating parameter value. Operation of the vapor processing system in a manner exceeding or going below the operating parameter value, as specified above, shall constitute a violation of the emission standard in § 63.422(b).

(c) Each owner or operator of gasoline storage vessels subject to the provisions of § 63.423 shall comply with the monitoring requirements in § 60.116b of this chapter, except records shall be kept for at least 5 years. If a closed vent system and control device are used, as specified in § 60.112b(a)(3) of this chapter, to comply with the requirements in § 63.423, the owner or operator shall also comply with the requirements in paragraph (a) of this section.

[59 FR 46350, Sept. 8, 1994, as amended at 68 FR 70966, Dec. 19, 2003]

**§ 63.428 Reporting and recordkeeping.**

(a) The initial notifications required for existing affected sources under § 63.9(b)(2) shall be submitted by 1 year after an affected source becomes subject to the provisions of this subpart or by December 16, 1996, whichever is later. Affected sources that are major sources on December 16, 1996 and plan to be area sources by December 15, 1997 shall include in this notification a brief, non-binding description of and schedule for the action(s) that are planned to achieve area source status.

(b) Each owner or operator of a bulk gasoline terminal subject to the provisions of this subpart shall keep records of the test results for each gasoline cargo tank loading at the facility as follows:

(1) Annual certification testing performed under § 63.425(e) and railcar bubble leak testing performed under § 63.425(i); and

(2) Continuous performance testing performed at any time at that facility under § 63.425 (f), (g), and (h).

(3) The documentation file shall be kept up-to-date for each gasoline cargo tank loading at the facility. The documentation for each test shall include, as a minimum, the following information:

(i) Name of test: Annual Certification Test—Method 27 (§ 63.425(e)(1)); Annual Certification Test—Internal Vapor Valve (§ 63.425(e)(2)); Leak Detection Test (§ 63.425(f)); Nitrogen Pressure Decay Field Test (§ 63.425(g)); Continuous Performance Pressure Decay Test (§ 63.425(h)); or Railcar Bubble Leak Test Procedure (§ 63.425(i)).

(ii) Cargo tank owner's name and address.

(iii) Cargo tank identification number.

(iv) Test location and date.

(v) Tester name and signature.

(vi) Witnessing inspector, if any: Name, signature, and affiliation.

(vii) Vapor tightness repair: Nature of repair work and when performed in relation to vapor tightness testing.

(viii) Test results: test pressure; pressure or vacuum change, mm of water; time period of test; number of leaks found with instrument; and leak definition.

(c) Each owner or operator of a bulk gasoline terminal subject to the provisions of this subpart shall:

(1) Keep an up-to-date, readily accessible record of the continuous monitoring data required under § 63.427(a). This record shall indicate the time intervals during which loadings of gasoline cargo tanks have occurred or, alternatively, shall record the operating parameter data only during such loadings. The date and time of day shall also be indicated at reasonable intervals on this record.

(2) Record and report simultaneously with the notification of compliance status required under § 63.9(h):

(i) All data and calculations, engineering assessments, and manufacturer's recommendations used in determining the operating parameter value under § 63.425(b); and

(ii) The following information when using a flare under provisions of § 63.11(b) to comply with § 63.422(b):

(A) Flare design (i.e., steam-assisted, air-assisted, or non-assisted); and

(B) All visible emissions readings, heat content determinations, flow rate measurements, and exit velocity determinations made during the compliance determination required under § 63.425(a).

(3) If an owner or operator requests approval to use a vapor processing system or monitor an operating parameter other than those specified in § 63.427(a), the owner or operator shall submit a description of planned reporting and recordkeeping procedures. The Administrator will specify appropriate reporting and recordkeeping requirements as part of the review of the permit application.

(d) Each owner or operator of storage vessels subject to the provisions of this subpart shall keep records and furnish reports as specified in § 60.115b of this chapter, except records shall be kept for at least 5 years.

(e) Each owner or operator complying with the provisions of § 63.424 (a) through (d) shall record the following information in the log book for each leak that is detected:

(1) The equipment type and identification number;

(2) The nature of the leak (i.e., vapor or liquid) and the method of detection (i.e., sight, sound, or smell);

(3) The date the leak was detected and the date of each attempt to repair the leak;

(4) Repair methods applied in each attempt to repair the leak;

(5) “Repair delayed” and the reason for the delay if the leak is not repaired within 15 calendar days after discovery of the leak;

(6) The expected date of successful repair of the leak if the leak is not repaired within 15 days; and

(7) The date of successful repair of the leak.

(f) Each owner or operator subject to the provisions of § 63.424 shall report to the Administrator a description of the types, identification numbers, and locations of all equipment in gasoline service. For facilities electing to implement an instrument program under § 63.424(f), the report shall contain a full description of the program.

(1) In the case of an existing source or a new source that has an initial startup date before the effective date, the report shall be submitted with the notification of compliance status required under § 63.9(h), unless an extension of compliance is granted under § 63.6(i). If an extension of compliance is granted, the report shall be submitted on a date scheduled by the Administrator.

(2) In the case of new sources that did not have an initial startup date before the effective date, the report shall be submitted with the application for approval of construction, as described in § 63.5(d).

(g) Each owner or operator of a bulk gasoline terminal or pipeline breakout station subject to the provisions of this subpart shall include in a semiannual report to the Administrator the following information, as applicable:

(1) Each loading of a gasoline cargo tank for which vapor tightness documentation had not been previously obtained by the facility;

(2) Periodic reports required under paragraph (d) of this section; and

(3) The number of equipment leaks not repaired within 5 days after detection.

(h) Each owner or operator of a bulk gasoline terminal or pipeline breakout station subject to the provisions of this subpart shall submit an excess emissions report to the Administrator in accordance with § 63.10(e)(3), whether or not a CMS is installed at the facility. The following occurrences are excess emissions events under this subpart, and the following information shall be included in the excess emissions report, as applicable:

(1) Each exceedance or failure to maintain, as appropriate, the monitored operating parameter value determined under § 63.425(b). The report shall include the monitoring data for the days on which exceedances or failures to maintain have occurred, and a description and timing of the steps taken to repair or perform maintenance on the vapor collection and processing systems or the CMS.

(2) Each instance of a nonvapor-tight gasoline cargo tank loading at the facility in which the owner or operator failed to take steps to assure that such cargo tank would not be reloaded at the facility before vapor tightness documentation for that cargo tank was obtained.

(3) Each reloading of a nonvapor-tight gasoline cargo tank at the facility before vapor tightness documentation for that cargo tank is obtained by the facility in accordance with § 63.422(c)(2).

(4) For each occurrence of an equipment leak for which no repair attempt was made within 5 days or for which repair was not completed within 15 days after detection:

(i) The date on which the leak was detected;

(ii) The date of each attempt to repair the leak;

(iii) The reasons for the delay of repair; and

(iv) The date of successful repair.

(i) Each owner or operator of a facility meeting the criteria in § 63.420(c) shall perform the requirements of this paragraph (i), all of which will be available for public inspection:

(1) Document and report to the Administrator not later than December 16, 1996 for existing facilities, within 30 days for existing facilities subject to § 63.420(c) after December 16, 1996, or at startup for new facilities the methods, procedures, and assumptions supporting the calculations for determining criteria in § 63.420(c);

(2) Maintain records to document that the facility parameters established under § 63.420(c) have not been exceeded; and

(3) Report annually to the Administrator that the facility parameters established under § 63.420(c) have not been exceeded.

(4) At any time following the notification required under paragraph (i)(1) of this section and approval by the Administrator of the facility parameters, and prior to any of the parameters being exceeded, the owner or operator may submit a report to request modification of any facility parameter to the Administrator for approval. Each such request shall document any expected HAP emission change resulting from the change in parameter.

(j) Each owner or operator of a facility meeting the criteria in § 63.420(d) shall perform the requirements of this paragraph (j), all of which will be available for public inspection:

(1) Document and report to the Administrator not later than December 16, 1996 for existing facilities, within 30 days for existing facilities subject to § 63.420(d) after December 16, 1996, or at startup for new facilities the use of the emission screening equations in § 63.420(a)(1) or (b)(1) and the calculated value of $E_T$ or $E_P$ ;

(2) Maintain a record of the calculations in § 63.420 (a)(1) or (b)(1), including methods, procedures, and assumptions supporting the calculations for determining criteria in § 63.420(d); and

(3) At any time following the notification required under paragraph (j)(1) of this section, and prior to any of the parameters being exceeded, the owner or operator may notify the Administrator of modifications to the facility parameters. Each such notification shall document any expected HAP emission change resulting from the change in parameter.

(k) As an alternative to keeping records at the terminal of each gasoline cargo tank test result as required in paragraph (b) of this section, an owner or operator may comply with the requirements in either paragraph (k)(1) or (2) of this section.

(1) An electronic copy of each record is instantly available at the terminal.

(i) The copy of each record in paragraph (k)(1) of this section is an exact duplicate image of the original paper record with certifying signatures.

(ii) The permitting authority is notified in writing that each terminal using this alternative is in compliance with paragraph (k)(1) of this section.

(2) For facilities that utilize a terminal automation system to prevent gasoline cargo tanks that do not have valid cargo tank vapor tightness documentation from loading (e.g., via a card lock-out system), a copy of the documentation is made available (e.g., via facsimile) for inspection by permitting authority representatives during the course of a site visit, or within a mutually agreeable time frame.

(i) The copy of each record in paragraph (k)(2) of this section is an exact duplicate image of the original paper record with certifying signatures.

(ii) The permitting authority is notified in writing that each terminal using this alternative is in compliance with paragraph (k)(2) of this section.

[59 FR 64318, Dec. 14, 1994, as amended at 61 FR 7723, Feb. 29, 1996; 62 FR 9093, Feb. 28, 1997; 68 FR 70966, Dec. 19, 2003; 71 FR 17358, Apr. 6, 2006]

**§ 63.429 Implementation and enforcement.**

(a) This subpart can be implemented and enforced by the U.S. EPA, or a delegated authority such as the applicable State, local, or Tribal agency. If the U.S. EPA Administrator has delegated authority to a State, local, or Tribal agency, then that agency, in addition to the U.S. EPA, has the authority to implement and enforce this subpart. Contact the applicable U.S. EPA Regional Office to find out if implementation and enforcement of this subpart is delegated to a State, local, or Tribal agency.

(b) In delegating implementation and enforcement authority of this subpart to a State, local, or Tribal agency under subpart E of this part, the authorities contained in paragraph (c) of this section are retained by the Administrator of U.S. EPA and cannot be transferred to the State, local, or Tribal agency.

(c) The authorities that cannot be delegated to State, local, or Tribal agencies are as specified in paragraphs (c)(1) through (4) of this section.

(1) Approval of alternatives to the requirements in §§ 63.420, 63.422 through 63.423, and 63.424. Any owner or operator requesting to use an alternative means of emission limitation for storage vessels covered by § 63.423 must follow the procedures in § 63.426.

(2) Approval of major alternatives to test methods under § 63.7(e)(2)(ii) and (f), as defined in § 63.90, and as required in this subpart.

(3) Approval of major alternatives to monitoring under § 63.8(f), as defined in § 63.90, and as required in this subpart, and any alternatives to § 63.427(a)(1) through (4) per § 63.427(a)(5).

(4) Approval of major alternatives to recordkeeping and reporting under § 63.10(f), as defined in § 63.90, and as required in this subpart.

[68 FR 37348, June 23, 2003]

**Table 1 to Subpart R of Part 63—General Provisions Applicability to Subpart R**

| Reference | Applies to subpart R | Comment |
|---|---|---|
| 63.1(a)(1) | Yes | |
| 63.1(a)(2) | Yes | |
| 63.1(a)(3) | Yes | |
| 63.1(a)(4) | Yes | |
| 63.1(a)(5) | No | Section reserved |
| 63.1(a)(6)(8) | Yes | |
| 63.1(a)(9) | No | Section reserved |
| 63.1(a)(10) | Yes | |
| 63.1(a)(11) | Yes | |
| 63.1(a)(12))-(a)(14) | Yes | |
| 63.1(b)(1) | No | Subpart R specifies applicability in § 63.420 |
| 63.1(b)(2) | Yes | |

| Reference | Applies to subpart R | Comment |
|---|---|---|
| 63.1(b)(3) | No | Subpart R specifies reporting and recordkeeping for some large area sources in § 63.428 |
| 63.1(c)(1) | Yes | |
| 63.1(c)(2) | Yes | Some small sources are not subject to subpart R |
| 63.1(c)(3) | No | Section reserved |
| 63.1(c)(4) | Yes | |
| 63.1(c)(5) | Yes | |
| 63.1(d) | No | Section reserved |
| 63.1(e) | Yes | |
| 63.2 | Yes | Additional definitions in § 63.421 |
| 63.3(a)-(c) | Yes | |
| 63.4(a)(1)-(a)(3) | Yes | |
| 63.4(a)(4) | No | Section reserved |
| 63.4(a)(5) | Yes | |
| 63.4(b) | Yes | |
| 63.4(c) | Yes | |
| 63.5(a)(1) | Yes | |
| 63.5(a)(2) | Yes | |
| 63.5(b)(1) | Yes | |
| 63.5(b)(2) | No | Section reserved |
| 63.5(b)(3) | Yes | |
| 63.5(b)(4) | Yes | |
| 63.5(b)(5) | Yes | |
| 63.5(b)(6) | Yes | |
| 63.5(c) | No | Section reserved |
| 63.5(d)(1) | Yes | |
| 63.5(d)(2) | Yes | |
| 63.5(d)(3) | Yes | |
| 63.5(d)(4) | Yes | |
| 63.5(e) | Yes | |
| 63.5(f)(1) | Yes | |
| 63.5(f)(2) | Yes | |
| 63.6(a) | Yes | |
| 63.6(b)(1) | Yes | |
| 63.6(b)(2) | Yes | |
| 63.6(b)(3) | Yes | |
| 63.6(b)(4) | Yes | |
| 63.6(b)(5) | Yes | |
| 63.6(b)(6) | No | Section reserved |
| 63.6(b)(7) | Yes | |
| 63.6(c)(1) | No | Subpart R specifies the compliance date |
| 63.6(c)(2) | Yes | |
| 63.6(c)(3)-(c)(4) | No | Sections reserved |

| Reference | Applies to subpart R | Comment |
|---|---|---|
| 63.6(c)(5) | Yes | |
| 63.6(d) | No | Section reserved |
| 63.6(e) | Yes | |
| 63.6(f)(1) | Yes | |
| 63.6(f)(2) | Yes | |
| 63.6(f)(3) | Yes | |
| 63.6(g) | Yes | |
| 63.6(h) | No | Subpart R does not require COMS |
| 63.6(i)(1)-(i)(14) | Yes | |
| 63.6(i)(15) | No | Section reserved |
| 63.6(i)(16) | Yes | |
| 63.6(j) | Yes | |
| 63.7(a)(1) | Yes | |
| 63.7(a)(2) | Yes | |
| 63.7(a)(3) | Yes | |
| 63.7(b) | Yes | |
| 63.7(c) | Yes | |
| 63.7(d) | Yes | |
| 63.7(e)(1) | Yes | |
| 63.7(e)(2) | Yes | |
| 63.7(e)(3) | Yes | |
| 63.7(e)(4) | Yes | |
| 63.7(f) | Yes | |
| 63.7(g) | Yes | |
| 63.7(h) | Yes | |
| 63.8(a)(1) | Yes | |
| 63.8(a)(2) | Yes | |
| 63.8(a)(3) | No | Section reserved |
| 63.8(a)(4) | Yes | |
| 63.8(b)(1) | Yes | |
| 63.8(b)(2) | Yes | |
| 63.8(b)(3) | Yes | |
| 63.8(c)(1) | Yes | |
| 63.8(c)(2) | Yes | |
| 63.8(c)(3) | Yes | |
| 63.8(c)(4) | Yes | |
| 63.8(c)(5) | No | Subpart R does not require COMS |
| 63.8(c)(6)-(c)(8) | Yes | |
| 63.8(d) | Yes | |
| 63.8(e) | Yes | |
| 63.8(f)(1)-(f)(5) | Yes | |
| 63.8(f)(6) | Yes | |

| Reference | Applies to subpart R | Comment |
|---|---|---|
| 63.8(g) | Yes | |
| 63.9(a) | Yes | |
| 63.9(b)(1) | Yes | |
| 63.9(b)(2) | No | Subpart R allows additional time for existing sources to submit initial notification. Sec. 63.428(a) specifies submittal by 1 year after being subject to the rule or December 16, 1996, whichever is later. |
| 63.9(b)(3) | Yes | |
| 63.9(b)(4) | Yes | |
| 63.9(b)(5) | Yes | |
| 63.9(c) | Yes | |
| 63.9(d) | Yes | |
| 63.9(e) | Yes | |
| 63.9(f) | Yes | |
| 63.9(g) | Yes | |
| 63.9(h)(1)-(h)(3) | Yes | |
| 63.9(h)(4) | No | Section reserved |
| 63.9(h)(5)-(h)(6) | Yes | |
| 63.9(i) | Yes | |
| 63.9(j) | Yes | |
| 63.10(a) | Yes | |
| 63.10(b)(1) | Yes | |
| 63.10(b)(2) | Yes | |
| 63.10(b)(3) | Yes | |
| 63.10(c)(1) | Yes | |
| 63.10(c)(2)-(c)(4) | No | Sections reserved |
| 63.10(c)(5)-(c)(8) | Yes | |
| 63.10(c)(9) | No | Section reserved |
| 63.10(c)(5)-(c)(8) | Yes | |
| 63.10(d)(1) | Yes | |
| 63.10(d)(2) | Yes | |
| 63.10(d)(3) | Yes | |
| 63.10(d)(4) | Yes | |
| 63.10(d)(5) | Yes | |
| 63.10(e) | Yes | |
| 63.10(f) | Yes | |
| 63.11(a)-(b) | Yes | |
| 63.11(c), (d), and (e) | Yes | |
| 63.12(a)-(c) | Yes | |
| 63.13(a)-(c) | Yes | |
| 63.14(a)-(b) | Yes | |

| Reference | Applies to subpart R | Comment |
|---|---|---|
| 63.15(a)-(b) | Yes | |

[59 FR 64318, Dec. 14, 1994, as amended at 61 FR 7724, Feb. 29, 1996; 73 FR 78213, Dec. 22, 2008]

**Attachment B**
**To Part 70 Operating Permit Renewal No. T129-25424-00003**

[Downloaded from the eCFR on May 22, 2013]

**Electronic Code of Federal Regulations**

**Title 40: Protection of Environment**

**40 CFR 63, Subpart UUU—National Emission Standards for Hazardous Air Pollutants for Petroleum Refineries: Catalytic Cracking Units, Catalytic Reforming Units, and Sulfur Recovery Units**

Source: 67 FR 17773, Apr. 11, 2002, unless otherwise noted.

**What This Subpart Covers**

**§ 63.1560 What is the purpose of this subpart?**

This subpart establishes national emission standards for hazardous air pollutants (HAP) emitted from petroleum refineries. This subpart also establishes requirements to demonstrate initial and continuous compliance with the emission limitations and work practice standards.

**§ 63.1561 Am I subject to this subpart?**

(a) You are subject to this subpart if you own or operate a petroleum refinery that is located at a major source of HAP emissions.

(1) A petroleum refinery is an establishment engaged primarily in petroleum refining as defined in the Standard Industrial Classification (SIC) code 2911 and the North American Industry Classification (NAIC) code 32411, and used mainly for:

(i) Producing transportation fuels (such as gasoline, diesel fuels, and jet fuels), heating fuels (such as kerosene, fuel gas distillate, and fuel oils), or lubricants;

(ii) Separating petroleum; or

(iii) Separating, cracking, reacting, or reforming an intermediate petroleum stream, or recovering a by-product(s) from the intermediate petroleum stream (e.g., sulfur recovery).

(2) A major source of HAP is a plant site that emits or has the potential to emit any single HAP at a rate of 9.07 megagrams (10 tons) or more per year or any combination of HAP at a rate of 22.68 megagrams (25 tons) or more per year.

(b) [Reserved]

**§ 63.1562 What parts of my plant are covered by this subpart?**

(a) This subpart applies to each new, reconstructed, or existing affected source at a petroleum refinery.

(b) The affected sources are:

(1) The process vent or group of process vents on fluidized catalytic cracking units that are associated with regeneration of the catalyst used in the unit ( *i.e.* , the catalyst regeneration flue gas vent).

(2) The process vent or group of process vents on catalytic reforming units (including but not limited to semi-regenerative, cyclic, or continuous processes) that are associated with regeneration of the catalyst used in the unit. This affected source includes vents that are used during the unit depressurization, purging, coke burn, and catalyst rejuvenation.

(3) The process vent or group of process vents on Claus or other types of sulfur recovery plant units or the tail gas treatment units serving sulfur recovery plants, that are associated with sulfur recovery.

(4) Each bypass line serving a new, existing, or reconstructed catalytic cracking unit, catalytic reforming unit, or sulfur recovery unit. This means each vent system that contains a bypass line (e.g., ductwork) that could divert an affected vent stream away from a control device used to comply with the requirements of this subpart.

(c) An affected source is a new affected source if you commence construction of the affected source after September 11, 1998, and you meet the applicability criteria in § 63.1561 at the time you commenced construction.

(d) Any affected source is reconstructed if you meet the criteria in § 63.2.

(e) An affected source is existing if it is not new or reconstructed.

(f) This subpart does not apply to:

(1) A thermal catalytic cracking unit.

(2) A sulfur recovery unit that does not recover elemental sulfur or where the modified reaction is carried out in a water solution which contains a metal ion capable of oxidizing the sulfide ion to sulfur (e.g., the LO-CAT II process).

(3) A redundant sulfur recovery unit not located at a petroleum refinery and used by the refinery only for emergency or maintenance backup.

(4) Equipment associated with bypass lines such as low leg drains, high point bleed, analyzer vents, open-ended valves or lines, or pressure relief valves needed for safety reasons.

(5) Gaseous streams routed to a fuel gas system.

[67 FR 17773, Apr. 11, 2002, as amended at 70 FR 6938, Feb. 9, 2005]

**§ 63.1563 When do I have to comply with this subpart?**

(a) If you have a new or reconstructed affected source, you must comply with this subpart according to the requirements in paragraphs (a)(1) and (2) of this section.

(1) If you startup your affected source before April 11, 2002, then you must comply with the emission limitations and work practice standards for new and reconstructed sources in this subpart no later than April 11, 2002.

(2) If you startup your affected source after April 11, 2002, you must comply with the emission limitations and work practice standards for new and reconstructed sources in this subpart upon startup of your affected source.

(b) If you have an existing affected source, you must comply with the emission limitations and work practice standards for existing affected sources in this subpart by no later than April 11, 2005 except as specified in paragraph (c) of this section.

(c) We will grant an extension of compliance for an existing catalytic cracking unit allowing additional time to meet the emission limitations and work practice standards for catalytic cracking units in §§ 63.1564 and 63.1565 if you commit to hydrotreating the catalytic cracking unit feedstock and to meeting the emission limitations of this subpart on the same date that your facility meets the final Tier 2 gasoline sulfur control standard (40 CFR part 80, subpart J). To

obtain an extension, you must submit a written notification to your permitting authority according to the requirements in § 63.1574(e). Your notification must include the information in paragraphs (c)(1) and (2) of this section.

(1) Identification of the affected source with a brief description of the controls to be installed (if needed) to comply with the emission limitations for catalytic cracking units in this subpart.

(2) A compliance schedule, including the information in paragraphs (c)(2)(i) through (iv) of this section.

(i) The date by which onsite construction or the process change is to be initiated.

(ii) The date by which onsite construction or the process change is to be completed.

(iii) The date by which your facility will achieve final compliance with both the final Tier 2 gasoline sulfur control standard as specified in § 80.195, and the emission limitations and work practice standards for catalytic cracking units in this subpart. In no case will your permitting authority grant an extension beyond the date you are required to meet the Tier 2 gasoline sulfur control standard or December 31, 2009, whichever comes first. If you don't comply with the emission limitations and work practice standards for existing catalytic cracking units by the specified date, you will be out-of-compliance with the requirements for catalytic cracking units beginning April 11, 2005.

(iv) A brief description of interim emission control measures that will be taken to ensure proper operation and maintenance of the process equipment during the period of the compliance extension.

(d) If you have an area source that increases its emissions or its potential to emit such that it becomes a major source of HAP, the requirements in paragraphs (d)(1) and (2) of this section apply.

(1) Any portion of the existing facility that is a new affected source or a new reconstructed source must be in compliance with the requirements of this subpart upon startup.

(2) All other parts of the source must be in compliance with the requirements of this subpart by no later than 3 years after it becomes a major source or, if applicable, the extended compliance date granted according to the requirements in paragraph (c) of this section.

(e) You must meet the notification requirements in § 63.1574 according to the schedule in § 63.1574 and in 40 CFR part 63, subpart A. Some of the notifications must be submitted before the date you are required to comply with the emission limitations and work practice standards in this subpart.

**Catalytic Cracking Units, Catalytic Reforming Units, Sulfur Recovery Units, and Bypass Lines**

**§ 63.1564 What are my requirements for metal HAP emissions from catalytic cracking units?**

(a) What emission limitations and work practice standards must I meet? You must:

(1) Meet each emission limitation in Table 1 of this subpart that applies to you. If your catalytic cracking unit is subject to the NSPS for PM in § 60.102 of this chapter, you must meet the emission limitations for NSPS units. If your catalytic cracking unit isn't subject to the NSPS for PM, you can choose from the four options in paragraphs (a)(1)(i) through (iv) of this section:

(i) You can elect to comply with the NSPS requirements (Option 1);

(ii) You can elect to comply with the PM emission limit (Option 2);

(iii) You can elect to comply with the Nickel (Ni) lb/hr emission limit (Option 3); or

(iv) You can elect to comply with the Ni lb/1,000 lbs of coke burn-off emission limit (Option 4).

(2) Comply with each operating limit in Table 2 of this subpart that applies to you.

(3) Prepare an operation, maintenance, and monitoring plan according to the requirements in § 63.1574(f) and operate at all times according to the procedures in the plan.

(4) The emission limitations and operating limits for metal HAP emissions from catalytic cracking units required in paragraphs (a)(1) and (2) of this section do not apply during periods of planned maintenance preapproved by the applicable permitting authority according to the requirements in § 63.1575(j).

(b) How do I demonstrate initial compliance with the emission limitations and work practice standard? You must:

(1) Install, operate, and maintain a continuous monitoring system(s) according to the requirements in § 63.1572 and Table 3 of this subpart.

(2) Conduct a performance test for each catalytic cracking unit not subject to the NSPS for PM according to the requirements in § 63.1571 and under the conditions specified in Table 4 of this subpart.

(3) Establish each site-specific operating limit in Table 2 of this subpart that applies to you according to the procedures in Table 4 of this subpart.

(4) Use the procedures in paragraphs (b)(4)(i) through (iv) of this section to determine initial compliance with the emission limitations.

(i) If you elect Option 1 in paragraph (a)(1)(i) of ths section, the NSPS requirements, compute the PM emission rate (lb/1,000 lbs of coke burn-off) for each run using Equations 1, 2, and 3 (if applicable) of this section as follows:

$$R_c = K_1 Q_r (\%CO_2 + \%CO) + K_2 Q_a - K_3 Q_r \left[ (\%CO/2) + \%CO_2 + \%O_2 \right] + K_3 Q_{oxy} \left( \%O_{xy} \right) \qquad (Eq.\ 1)$$

Where:

$R_c$ = Coke burn-off rate, kg/hr (lb/hr);

$Q_r$ = Volumetric flow rate of exhaust gas from catalyst regenerator before adding air or gas streams. Example: You may measure upstream or downstream of an electrostatic precipitator, but you must measure upstream of a carbon monoxide boiler, dscm/min (dscf/min). You may use the alternative in either § 63.1573(a)(1) or (a)(2), as applicable, to calculate $Q_r$ ;

$Q_a$ = Volumetric flow rate of air to catalytic cracking unit catalyst regenerator, as determined from instruments in the catalytic cracking unit control room, dscm/min (dscf/min);

$\%CO_2$ = Carbon dioxide concentration in regenerator exhaust, percent by volume (dry basis);

%CO = Carbon monoxide concentration in regenerator exhaust, percent by volume (dry basis);

$\%O_2$ = Oxygen concentration in regenerator exhaust, percent by volume (dry basis);

$K_1$ = Material balance and conversion factor, 0.2982 (kg-min)/(hr-dscm-%) (0.0186 (lb-min)/(hr-dscf-%));

$K_2$ = Material balance and conversion factor, 2.088 (kg-min)/(hr-dscm) (0.1303 (lb-min)/(hr-dscf));

$K_3$ = Material balance and conversion factor, 0.0994 (kg-min)/(hr-dscm-%) (0.0062 (lb-min)/(hr-dscf-%));

$Q_{oxy}$ = Volumetric flow rate of oxygen-enriched air stream to regenerator, as determined from instruments in the catalytic cracking unit control room, dscm/min (dscf/min); and

$\%O_{xy}$ = Oxygen concentration in oxygen-enriched air stream, percent by volume (dry basis).

$$E = \frac{K \times C_s \times Q_{sd}}{R_c} \qquad (Eq.\ 2)$$

Where:

E = Emission rate of PM, kg/1,000 kg (lb/1,000 lb) of coke burn-off;

$C_s$ = Concentration of PM, g/dscm (lb/dscf);

$Q_{sd}$ = Volumetric flow rate of the catalytic cracking unit catalyst regenerator flue gas as measured by Method 2 in appendix A to part 60 of this chapter, dscm/hr (dscf/hr);

$R_c$ = Coke burn-off rate, kg coke/hr (1,000 lb coke/hr); and

K = Conversion factor, 1.0 (kg2 /g)/(1,000 kg) (1,000 lb/(1,000 lb)).

$$E_s = 1.0 + A(H/R_c)K' \qquad (Eq.\ 3)$$

Where:

Es = Emission rate of PM allowed, kg/1,000 kg (1b/1,000 lb) of coke burn-off in catalyst regenerator;

1.0 = Emission limitation, kg coke/1,000 kg (lb coke/1,000 lb);

A = Allowable incremental rate of PM emissions, 0.18 g/million cal (0.10 lb/million Btu); and

H = Heat input rate from solid or liquid fossil fuel, million cal/hr (million Btu/hr). Make sure your permitting authority approves procedures for determining the heat input rate.

$R_c$ = Coke burn-off rate, kg coke/hr (1,000 lb coke/hr) determined using Equation 1 of this section; and

K′ = Conversion factor to units to standard, 1.0 ($kg^2$ /g)/(1,000 kg) ($10^3$ lb/(1,000 lb)).

(ii) If you elect Option 2 in paragraph (a)(1)(ii) of this section, the PM emission limit, compute your PM emission rate (lb/1,000 lbs of coke burn-off) using Equations 1 and 2 of this section and your site-specific opacity operating limit (if you use a continuous opacity monitoring system) using Equation 4 of this section as follows:

$$Opacity\ Limit = Opacity_{st} \times \left( \frac{1\,\text{lb/klb coke burn}}{\text{PMEmR}_{st}} \right) \qquad (Eq.\ 4)$$

Where:

Opacity limit = Maximum permissible hourly average opacity, percent, or 10 percent, whichever is greater;

$Opacity_{st}$ = Hourly average opacity measured during the source test runs, percent; and

$PMEmR_{st}$ = PM emission rate measured during the source test, lb/1,000 lbs coke burn.

$$E_{Ni_1} = C_{Ni} \times Q_{sd} \qquad (Eq.\ 5)$$

(iii) If you elect Option 3 in paragraph (a)(1)(iii) of this section, the Ni lb/hr emission limit, compute your Ni emission rate using Equation 5 of this section and your site-specific Ni operating limit (if you use a continuous opacity monitoring system) using Equations 6 and 7 of this section as follows:

Where:

$E_{Ni1}$ = Mass emission rate of Ni, mg/hr (lb/hr); and

$C_{Ni}$ = Ni concentration in the catalytic cracking unit catalyst regenerator flue gas as measured by Method 29 in appendix A to part 60 of this chapter, mg/dscm (lbs/dscf).

$$Opacity_1 = \frac{13\ \text{g Ni/hr}}{\text{NiEmR1}_{st}} \times Opacity_{st} \qquad (Eq.\ 6)$$

Where:

$Opacity_I$ = Opacity value for use in Equation 7 of this section, percent, or 10 percent, whichever is greater; and

$NiEmR1_{st}$ = Average Ni emission rate calculated as the arithmetic average Ni emission rate using Equation 5 of this section for each of the performance test runs, g Ni/hr.

$$Ni\ \textbf{Operating Limit}_1 = Opacity_1 \times Q_{mon,st} \times E\text{-}Cat_{st} \qquad (Eq.\ 7)$$

Where:

Ni operating $limit_1$ = Maximum permissible hourly average Ni operating limit, percent-acfm-ppmw, i.e., your site-specific Ni operating limit;

$Q_{mon,st}$ = Hourly average actual gas flow rate as measured by the continuous parameter monitoring system during the performance test or using the alternative procedure in § 63.1573, acfm; and

$E\text{-}Cat_{st}$ = Ni concentration on equilibrium catalyst measured during source test, ppmw.

(iv) If you elect Option 4 in paragraph (a)(1)(iv) of this section, the Ni lbs/1,000 lbs of coke burn-off emission limit, compute your Ni emission rate using Equations 1 and 8 of this section and your site-specific Ni operating limit (if you use a continuous opacity monitoring system) using Equations 9 and 10 of this section as follows:

$$E_{Ni_2} = \frac{C_{Ni} \times Q_{sd}}{R_c} \qquad (Eq.\ 8)$$

Where:

ENi2 = Normalized mass emission rate of Ni, mg/kg coke (lb/1,000 lbs coke).

$$Opacity_2 = \frac{1.0\ \text{mg/kg coke}}{\text{NiEmR2}_{st}} \times Opacity_{st} \qquad (Eq.\ 9)$$

Where:

$Opacity_2$ = Opacity value for use in Equation 10 of this section, percent, or 10 percent, whichever is greater; and

$NiEmR2_{st}$ = Average Ni emission rate calculated as the arithmetic average Ni emission rate using Equation 8 of this section for each of the performance test runs, mg/kg coke.

$$Ni\ \text{Operating Limit}_2 = Opacity_2 \times E\text{-}Cat_{st} \times \frac{Q_{mon,st}}{R_{c,st}} \qquad (Eq.\ 10)$$

Where:

Ni operating $limit_2$ = Maximum permissible hourly average Ni operating limit, percent-ppmw-acfm-hr/kg coke, i.e., your site-specific Ni operating limit; and

$R_{c,st}$ = Coke burn rate from Equation 1 of this section, as measured during the initial performance test, kg coke/hr.

(5) Demonstrate initial compliance with each emission limitation that applies to you according to Table 5 of this subpart.

(6) Demonstrate initial compliance with the work practice standard in paragraph (a)(3) of this section by submitting your operation, maintenance, and monitoring plan to your permitting authority as part of your Notification of Compliance Status.

(7) Submit the Notification of Compliance Status containing the results of the initial compliance demonstration according to the requirements in § 63.1574.

(c) How do I demonstrate continuous compliance with the emission limitations and work practice standards? You must:

(1) Demonstrate continuous compliance with each emission limitation in Tables 1 and 2 of this subpart that applies to you according to the methods specified in Tables 6 and 7 of this subpart.

(2) Demonstrate continuous compliance with the work practice standard in paragraph (a)(3) of this section by maintaining records to document conformance with the procedures in your operation, maintenance, and monitoring plan.

(3) If you use a continuous opacity monitoring system and elect to comply with Option 3 in paragraph (a)(1)(iii) of this section, determine continuous compliance with your site-specific Ni operating limit by using Equation 11 of this section as follows:

$$Ni\ \text{Operating Value}_1 = Opacity \times Q_{mon} \times E\text{-}Cat \qquad (Eq.\ 11)$$

Where:

Ni operating $value_1$ = Maximum permissible hourly average Ni standard operating value, %-acfm-ppmw;

Opacity = Hourly average opacity, percent;

$Q_{mon}$ = Hourly average actual gas flow rate as measured by continuous parameter monitoring system or calculated by alternative procedure in § 63.1573, acfm; and

E-Cat = Ni concentration on equilibrium catalyst from weekly or more recent measurement, ppmw.

(4) If you use a continuous opacity monitoring system and elect to comply with Option 4 in paragraph (a)(1)(iv) of this section, determine continuous compliance with your site-specific Ni operating limit by using Equation 12 of this section as follows:

$$Ni\ \text{Operating Value}_2 = \frac{Opacity \times E\text{-}Cat \times Q_{mon}}{R_c} \qquad (Eq.\ 12)$$

Where:

Ni operating value$_2$ = Maximum permissible hourly average Ni standard operating value, percent-acfm-ppmw-hr/kg coke.

[67 FR 17773, Apr. 11, 2002, as amended at 70 FR 6938, Feb. 9, 2005]

**§ 63.1565 What are my requirements for organic HAP emissions from catalytic cracking units?**

(a) What emission limitations and work practice standards must I meet? You must:

(1) Meet each emission limitation in Table 8 of this subpart that applies to you. If your catalytic cracking unit is subject to the NSPS for carbon monoxide (CO) in § 60.103 of this chapter, you must meet the emission limitations for NSPS units. If your catalytic cracking unit isn't subject to the NSPS for CO, you can choose from the two options in paragraphs (a)(1)(i) through (ii) of this section:

(i) You can elect to comply with the NSPS requirements (Option 1); or

(ii) You can elect to comply with the CO emission limit (Option 2).

(2) Comply with each site-specific operating limit in Table 9 of this subpart that applies to you.

(3) Prepare an operation, maintenance, and monitoring plan according to the requirements in § 63.1574(f) and operate at all times according to the procedures in the plan.

(4) The emission limitations and operating limits for organic HAP emissions from catalytic cracking units required in paragraphs (a)(1) and (2) of this section do not apply during periods of planned maintenance preapproved by the applicable permitting authority according to the requirements in § 63.1575(j).

(b) How do I demonstrate initial compliance with the emission limitations and work practice standards? You must:

(1) Install, operate, and maintain a continuous monitoring system according to the requirements in § 63.1572 and Table 10 of this subpart. Except:

(i) Whether or not your catalytic cracking unit is subject to the NSPS for CO in § 60.103 of this chapter, you don't have to install and operate a continuous emission monitoring system if you show that CO emissions from your vent average less than 50 parts per million (ppm), dry basis. You must get an exemption from your permitting authority, based on your written request. To show that the emissions average is less than 50 ppm (dry basis), you must continuously monitor CO emissions for 30 days using a CO continuous emission monitoring system that meets the requirements in § 63.1572.

(ii) If your catalytic cracking unit isn't subject to the NSPS for CO, you don't have to install and operate a continuous emission monitoring system or a continuous parameter monitoring system if you vent emissions to a boiler (including a “CO boiler”) or process heater that has a design heat input capacity of at least 44 megawatts (MW).

(iii) If your catalytic cracking unit isn't subject to the NSPS for CO, you don't have to install and operate a continuous emission monitoring system or a continuous parameter monitoring system if you vent emissions to a boiler or process heater in which all vent streams are introduced into the flame zone.

(2) Conduct each performance test for a catalytic cracking unit not subject to the NSPS for CO according to the requirements in § 63.1571 and under the conditions specified in Table 11 of this subpart.

(3) Establish each site-specific operating limit in Table 9 of this subpart that applies to you according to the procedures in Table 11 of this subpart.

(4) Demonstrate initial compliance with each emission limitation that applies to you according to Table 12 of this subpart.

(5) Demonstrate initial compliance with the work practice standard in paragraph (a)(3) of this section by submitting the operation, maintenance, and monitoring plan to your permitting authority as part of your Notification of Compliance Status according to § 63.1574.

(6) Submit the Notification of Compliance Status containing the results of the initial compliance demonstration according to the requirements in § 63.1574.

(c) How do I demonstrate continuous compliance with the emission limitations and work practice standards? You must:

(1) Demonstrate continuous compliance with each emission limitation in Tables 8 and 9 of this subpart that applies to you according to the methods specified in Tables 13 and 14 of this subpart.

(2) Demonstrate continuous compliance with the work practice standard in paragraph (a)(3) of this section by complying with the procedures in your operation, maintenance, and monitoring plan.

**§ 63.1566 What are my requirements for organic HAP emissions from catalytic reforming units?**

(a) What emission limitations and work practice standards must I meet? You must:

(1) Meet each emission limitation in Table 15 of this subpart that applies to you. You can choose from the two options in paragraphs (a)(1)(i) through (ii) of this section:

(i) You can elect to vent emissions of total organic compounds (TOC) to a flare that meets the control device requirements in § 63.11(b) (Option 1); or

(ii) You can elect to meet a TOC or nonmethane TOC percent reduction standard or concentration limit, whichever is less stringent (Option 2).

(2) Comply with each site-specific operating limit in Table 16 of this subpart that applies to you.

(3) Except as provided in paragraph (a)(4) of this section, the emission limitations in Tables 15 and 16 of this subpart apply to emissions from catalytic reforming unit process vents associated with initial catalyst depressuring and catalyst purging operations that occur prior to the coke burn-off cycle. The emission limitations in Tables 15 and 16 of this subpart do not apply to the coke burn-off, catalyst rejuvenation, reduction or activation vents, or to the control systems used for these vents.

(4) The emission limitations in Tables 15 and 16 of this subpart do not apply to emissions from process vents during depressuring and purging operations when the reactor vent pressure is 5 pounds per square inch gauge (psig) or less.

(5) Prepare an operation, maintenance, and monitoring plan according to the requirements in § 63.1574(f) and operate at all times according to the procedures in the plan.

(b) How do I demonstrate initial compliance with the emission limitations and work practice standard? You must:

(1) Install, operate, and maintain a continuous monitoring system(s) according to the requirements in § 63.1572 and Table 17 of this subpart.

(2) Conduct each performance test for a catalytic reforming unit according to the requirements in § 63.1571 and under the conditions specified in Table 18 of this subpart.

(3) Establish each site-specific operating limit in Table 16 of this subpart that applies to you according to the procedures in Table 18 of this subpart.

(4) Use the procedures in paragraph (b)(4)(i) or (ii) of this section to determine initial compliance with the emission limitations.

(i) If you elect the percent reduction standard under Option 2, calculate the emission rate of nonmethane TOC using Equation 1 of this section (if you use Method 25) or Equation 2 of this section (if you use Method 25A or Methods 25A and 18), then calculate the mass emission reduction using Equation 3 of this section as follows:

$$E = K_4 M_c Q_s \qquad (Eq.\ 1)$$

Where:

E = Emission rate of nonmethane TOC in the vent stream, kilograms-C per hour;

$K_4$ = Constant, $6.0 \times 10^{-5}$ (kilograms per milligram)(minutes per hour);

$M_c$ = Mass concentration of total gaseous nonmethane organic (as carbon) as measured and calculated using Method 25 in appendix A to part 60 of this chapter, mg/dscm; and

$Q_s$ = Vent stream flow rate, dscm/min, at a temperature of 20 degrees Celsius (C).

$$E = K_5 \left(C_{TOC} - \tfrac{1}{6} C_{methane}\right) Q_s \qquad (Eq.\ 2)$$

Where:

$K_5$ = Constant, $1.8 \times 10^{-4}$ (parts per million) $^{-1}$ (gram-mole per standard cubic meter) (gram-C per gram-mole-hexane) (kilogram per gram) (minutes per hour), where the standard temperature (standard cubic meter) is at 20 degrees C (uses 72g-C/g.mole hexane);

$C_{TOC}$ = Concentration of TOC on a dry basis in ppmv as hexane as measured by Method 25A in appendix A to part 60 of this chapter;

$C_{methane}$ = Concentration of methane on a dry basis in ppmv as measured by Method 18 in appendix A to part 60 of this chapter. If the concentration of methane is not determined, assume $C_{methane}$ equals zero; and

$Q_s$ = Vent stream flow rate, dry standard cubic meters per minute, at a temperature of 20 degrees C.

$$\%\ \text{reduction} = \frac{E_i - E_o}{E_i} \times 100\% \qquad (Eq.\ 3)$$

Where:

$E_i$ = Mass emission rate of TOC at control device inlet, kg/hr; and

$E_o$ = Mass emission rate of TOC at control device outlet, kg/hr.

(ii) If you elect the 20 parts per million by volume (ppmv) concentration limit, correct the measured TOC concentration for oxygen ($O_2$) content in the gas stream using Equation 4 of this section as follows:

$$C_{NMTOC,3\%O_2} = \left(C_{TOC} - \tfrac{1}{6} C_{methane}\right)\left(\frac{17.9\%}{20.9\% - \%O_2}\right) \qquad \text{(Eq. 4)}$$

Where:

$C_{NMTOC,3\%O_2}$ = Concentration of nonmethane TOC on a dry basis in ppmv as hexane corrected to 3 percent oxygen.

(5) You are not required to do a TOC performance test if:

(i) You elect to vent emissions to a flare as provided in paragraph (a)(1)(i) of this section (Option 1); or

(ii) You elect the TOC percent reduction or concentration limit in paragraph (a)(1)(ii) of this section (Option 2), and you use a boiler or process heater with a design heat input capacity of 44 MW or greater or a boiler or process heater in which all vent streams are introduced into the flame zone.

(6) Demonstrate initial compliance with each emission limitation that applies to you according to Table 19 of this subpart.

(7) Demonstrate initial compliance with the work practice standard in paragraph (a)(5) of this section by submitting the operation, maintenance, and monitoring plan to your permitting authority as part of your Notification of Compliance Status.

(8) Submit the Notification of Compliance Status containing the results of the initial compliance demonstration according to the requirements in § 63.1574.

(c) How do I demonstrate continuous compliance with the emission limitations and work practice standards? You must:

(1) Demonstrate continuous compliance with each emission limitation in Tables 15 and 16 of this subpart that applies to you according to the methods specified in Tables 20 and 21 of this subpart.

(2) Demonstrate continuous compliance with the work practice standards in paragraph (a)(3) of this section by complying with the procedures in your operation, maintenance, and monitoring plan.

[67 FR 17773, Apr. 11, 2002, as amended at 70 FR 6938, Feb. 9, 2005]

**§ 63.1567 What are my requirements for inorganic HAP emissions from catalytic reforming units?**

(a) What emission limitations and work practice standards must I meet? You must:

(1) Meet each emission limitation in Table 22 to this subpart that applies to you. If you operate a catalytic reforming unit in which different reactors in the catalytic reforming unit are regenerated in separate regeneration systems, then these emission limitations apply to each separate regeneration system. These emission limitations apply to emissions from catalytic reforming unit process vents associated with the coke burn-off and catalyst rejuvenation operations during coke burn-off and catalyst regeneration. You can choose from the two options in paragraphs (a)(1)(i) through (ii) of this section:

(i) You can elect to meet a percent reduction standard for hydrogen chloride (HCl) emissions (Option 1); or

(ii) You can elect to meet an HCl concentration limit (Option 2).

(2) Meet each site-specific operating limit in Table 23 of this subpart that applies to you. These operating limits apply during coke burn-off and catalyst rejuvenation.

(3) Prepare an operation, maintenance, and monitoring plan according to the requirements in § 63.1574(f) and operate at all times according to the procedures in the plan.

(b) How do I demonstrate initial compliance with the emission limitations and work practice standard? You must:

(1) Install, operate, and maintain a continuous monitoring system(s) according to the requirements in § 63.1572 and Table 24 of this subpart.

(2) Conduct each performance test for a catalytic reforming unit according to the requirements in § 63.1571 and the conditions specified in Table 25 of this subpart.

(3) Establish each site-specific operating limit in Table 23 of this subpart that applies to you according to the procedures in Table 25 of this subpart.

(4) Use the equations in paragraphs (b)(4)(i) through (iv) of this section to determine initial compliance with the emission limitations.

(i) Correct the measured HCl concentration for oxygen ($O_2$ ) content in the gas stream using Equation 1 of this section as follows:

$$C_{HCl,3\%O_2} = \left(\frac{17.9\%}{20.9\% - \%O_2}\right) C_{HCl} \qquad \text{(Eq. 1)}$$

Where:

$C_{HCl,3\ \%}\ O_2$ = Concentration of HCl on a dry basis in ppmv corrected to 3 percent oxygen or 1 ppmv, whichever is greater;

$C_{HCl}$ = Concentration of HCl on a dry basis in ppmv, as measured by Method 26A in 40 CFR part 60, appendix A; and

$\%O_2$ = Oxygen concentration in percent by volume (dry basis).

(ii) If you elect the percent reduction standard, calculate the emission rate of HCl using Equation 2 of this section; then calculate the mass emission reduction from the mass emission rates using Equation 3 of this section as follows:

$$E_{HCl} = K_6 C_{HCl} Q_s \qquad \text{(Eq. 2)}$$

Where:

$E_{HCl,}$ = Emission rate of HCl in the vent stream, grams per hour;

$K_6$ = Constant, 0.091 (parts per million) $^{-1}$ (grams HCl per standard cubic meter) (minutes per hour), where the standard temperature (standard cubic meter) is at 20 degrees Celsius (C); and

$Q_s$ = Vent stream flow rate, dscm/min, at a temperature of 20 degrees C.

$$HCl\%reduction = \frac{E_{HCl,i} - E_{HCl,o}}{E_{HCl,i}} \times 100\% \qquad \text{(Eq. 3)}$$

Where:

$E_{HCl,i}$ = Mass emission rate of HCl at control device inlet, g/hr; and

$E_{HCl,o}$ = Mass emission rate of HCl at control device outlet, g/hr.

(iii) If you are required to use a colormetric tube sampling system to demonstrate continuous compliance with the HCl concentration operating limit, calculate the HCl operating limit using Equation 4 of this section as follows:

$$C_{HCl,ppmvLimit} = 0.9 C_{HCl,AveTube} \left( \frac{C_{HCl,RegLimit}}{C_{HCl,3\%O_2}} \right) \qquad \text{(Eq. 4)}$$

Where:

$C_{HCl,ppmvLimit}$ = Maximum permissible HCl concentration for the HCl concentration operating limit, ppmv;

$C_{HCl,AveTube}$ = Average HCl concentration from the colormetric tube sampling system, calculated as the arithmetic average of the average HCl concentration measured for each performance test run, ppmv or 1 ppmv, whichever is greater; and

$C_{HCl,RegLimit}$ = Maximum permissible outlet HCl concentration for the applicable catalytic reforming unit as listed in Table 22 of this subpart, either 10 or 30 ppmv.

(iv) If you are required to use a colormetric tube sampling system to demonstrate continuous compliance with the percent reduction operating limit, calculate the HCl operating limit using Equation 5 of this section as follows:

$$C_{HCl,\%Limit} = 0.9 C_{HCl,AveTube} \left( \frac{100 - \%HClReduction_{Limit}}{100 - \%HClReduction_{Test}} \right) \qquad \text{(Eq. 5)}$$

Where:

$C_{HCl,\ \%\ Limit}$ = Maximum permissible HCl concentration for the percent reduction operating limit, ppmv;

$\%HCl\ Reduction_{Limit}$ = Minimum permissible HCl reduction for the applicable catalytic reforming unit as listed in Table 22 of this subpart, either 97 or 92 percent; and

$\%HCl\ Reduction_{Test}$ = Average percent HCl reduction calculated as the arithmetic average HCl reduction calculated using Equation 3 of this section for each performance source test, percent.

(5) Demonstrate initial compliance with each emission limitation that applies to you according to Table 26 of this subpart.

(6) Demonstrate initial compliance with the work practice standard in paragraph (a)(3) of this section by submitting the operation, maintenance, and monitoring plan to your permitting authority as part of your Notification of Compliance Status.

(7) Submit the Notification of Compliance Status containing the results of the initial compliance demonstration according to the requirements in § 63.1574.

(c) How do I demonstrate continuous compliance with the emission limitations and work practice standard? You must:

(1) Demonstrate continuous compliance with each emission limitation in Tables 22 and 23 of this subpart that applies to you according to the methods specified in Tables 27 and 28 of this subpart.

(2) Demonstrate continuous compliance with the work practice standard in paragraph (a)(3) of this section by maintaining records to document conformance with the procedures in your operation, maintenance and monitoring plan.

[67 FR 17773, Apr. 11, 2002, as amended at 70 FR 6939, Feb. 9, 2005]

**§ 63.1568 What are my requirements for HAP emissions from sulfur recovery units?**

(a) What emission limitations and work practice standard must I meet? You must:

(1) Meet each emission limitation in Table 29 of this subpart that applies to you. If your sulfur recovery unit is subject to the NSPS for sulfur oxides in § 60.104 of this chapter, you must meet the emission limitations for NSPS units. If your sulfur recovery unit isn't subject to the NSPS for sulfur oxides, you can choose from the options in paragraphs (a)(1)(i) through (ii) of this section:

(i) You can elect to meet the NSPS requirements (Option 1); or

(ii) You can elect to meet the total reduced sulfur (TRS) emission limitation (Option 2).

(2) Meet each operating limit in Table 30 of this subpart that applies to you.

(3) Prepare an operation, maintenance, and monitoring plan according to the requirements in § 63.1574(f) and operate at all times according to the procedures in the plan.

(b) How do I demonstrate initial compliance with the emission limitations and work practice standards? You must:

(1) Install, operate, and maintain a continuous monitoring system according to the requirements in § 63.1572 and Table 31 of this subpart.

(2) Conduct each performance test for a sulfur recovery unit not subject to the NSPS for sulfur oxides according to the requirements in § 63.1571 and under the conditions specified in Table 32 of this subpart.

(3) Establish each site-specific operating limit in Table 30 of this subpart that applies to you according to the procedures in Table 32 of this subpart.

(4) Correct the reduced sulfur samples to zero percent excess air using Equation 1 of this section as follows:

$$C_{adj} = C_{meas}\left[20.9_c/\left(20.9 - \%O_2\right)\right] \qquad (Eq.\ 1)$$

Where:

$C_{adj}$ = pollutant concentration adjusted to zero percent oxygen, ppm or g/dscm;

$C_{meas}$ = pollutant concentration measured on a dry basis, ppm or g/dscm;

$20.9_c$ = 20.9 percent oxygen—0.0 percent oxygen (defined oxygen correction basis), percent;

20.9 = oxygen concentration in air, percent;

$\%O_2$ = oxygen concentration measured on a dry basis, percent.

(5) Demonstrate initial compliance with each emission limitation that applies to you according to Table 33 of this subpart.

(6) Demonstrate initial compliance with the work practice standard in paragraph (a)(3) of this section by submitting the operation, maintenance, and monitoring plan to your permitting authority as part of your notification of compliance status.

(7) Submit the notification of compliance status containing the results of the initial compliance demonstration according to the requirements in § 63.1574.

(c) How do I demonstrate continuous compliance with the emission limitations and work practice standards? You must:

(1) Demonstrate continuous compliance with each emission limitation in Tables 29 and 30 of this subpart that applies to you according to the methods specified in Tables 34 and 35 of this subpart.

(2) Demonstrate continuous compliance with the work practice standard in paragraph (a)(3) of this section by complying with the procedures in your operation, maintenance, and monitoring plan.

**§ 63.1569 What are my requirements for HAP emissions from bypass lines?**

(a) *What work practice standards must I meet?* (1) You must meet each work practice standard in Table 36 of this subpart that applies to you. You can choose from the four options in paragraphs (a)(1)(i) through (iv) of this section:

(i) You can elect to install an automated system (Option 1);

(ii) You can elect to use a manual lock system (Option 2);

(iii) You can elect to seal the line (Option 3); or

(iv) You can elect to vent to a control device (Option 4).

(2) As provided in § 63.6(g), we, the EPA, may choose to grant you permission to use an alternative to the work practice standard in paragraph (a)(1) of this section.

(3) You must prepare an operation, maintenance, and monitoring plan according to the requirements in § 63.1574(f) and operate at all times according to the procedures in the plan.

(b) *How do I demonstrate initial compliance with the work practice standards?* You must:

(1) If you elect the option in paragraph (a)(1)(i) of this section, conduct each performance test for a bypass line according to the requirements in § 63.1571 and under the conditions specified in Table 37 of this subpart.

(2) Demonstrate initial compliance with each work practice standard in Table 36 of this subpart that applies to you according to Table 38 of this subpart.

(3) Demonstrate initial compliance with the work practice standard in paragraph (a)(3) of this section by submitting the operation, maintenance, and monitoring plan to your permitting authority as part of your notification of compliance status.

(4) Submit the notification of compliance status containing the results of the initial compliance demonstration according to the requirements in § 63.1574.

(c) *How do I demonstrate continuous compliance with the work practice standards?* You must:

(1) Demonstrate continuous compliance with each work practice standard in Table 36 of this subpart that applies to you according to the requirements in Table 39 of this subpart.

(2) Demonstrate continuous compliance with the work practice standard in paragraph (a)(2) of this section by complying with the procedures in your operation, maintenance, and monitoring plan.

**General Compliance Requirements**

**§ 63.1570 What are my general requirements for complying with this subpart?**

(a) You must be in compliance with all of the non-opacity standards in this subpart during the times specified in § 63.6(f)(1).

(b) You must be in compliance with the opacity and visible emission limits in this subpart during the times specified in § 63.6(h)(1).

(c) You must always operate and maintain your affected source, including air pollution control and monitoring equipment, according to the provisions in § 63.6(e)(1)(i). During the period between the compliance date specified for your affected source and the date upon which continuous monitoring systems have been installed and validated and any applicable operating limits have been set, you must maintain a log detailing the operation and maintenance of the process and emissions control equipment.

(d) You must develop a written startup, shutdown, and malfunction plan (SSMP) according to the provisions in § 63.6(e)(3).

(e) [Reserved]

(f) You must report each instance in which you did not meet each emission limitation and each operating limit in this subpart that applies to you. This includes periods of startup, shutdown, and malfunction. You also must report each instance in which you did not meet the work practice standards in this subpart that apply to you. These instances are deviations from the emission limitations and work practice standards in this subpart. These deviations must be reported according to the requirements in § 63.1575.

(g) Consistent with §§ 63.6(e) and 63.7(e)(1), deviations that occur during a period of startup, shutdown, or malfunction are not violations if you demonstrate to the Administrator's satisfaction that you were operating in accordance with § 63.6(e)(1). The SSMP must include elements designed to minimize the frequency of such periods (i.e., root cause analysis). The Administrator will determine whether deviations that occur during a period of startup, shutdown, or malfunction are violations, according to the provisions in § 63.6(e).

[67 FR 17773, Apr. 11, 2002, as amended at 71 FR 20462, Apr. 20, 2006]

**§ 63.1571 How and when do I conduct a performance test or other initial compliance demonstration?**

(a) *When must I conduct a performance test?* You must conduct performance tests and report the results by no later than 150 days after the compliance date specified for your source in § 63.1563 and according to the provisions in § 63.7(a)(2). If you are required to do a performance evaluation or test for a semi-regenerative catalytic reforming unit catalyst regenerator vent, you may do them at the first regeneration cycle after your compliance date and report the results in a followup Notification of Compliance Status report due no later than 150 days after the test.

(1) For each emission limitation or work practice standard where initial compliance is not demonstrated using a performance test, opacity observation, or visible emission observation, you must conduct the initial compliance demonstration within 30 calendar days after the compliance date that is specified for your source in § 63.1563.

(2) For each emission limitation where the averaging period is 30 days, the 30-day period for demonstrating initial compliance begins at 12:00 a.m. on the compliance date that is specified for your source in § 63.1563 and ends at 11:59 p.m., 30 calendar days after the compliance date that is specified for your source in § 63.1563.

(3) If you commenced construction or reconstruction between September 11, 1998 and April 11, 2002, you must demonstrate initial compliance with either the proposed emission limitation or the promulgated emission limitation no later than October 8, 2002 or within 180 calendar days after startup of the source, whichever is later, according to § 63.7(a)(2)(ix).

(4) If you commenced construction or reconstruction between September 11, 1998 and April 11, 2002, and you chose to comply with the proposed emission limitation when demonstrating initial compliance, you must conduct a second compliance demonstration for the promulgated emission limitation by October 10, 2005, or after startup of the source, whichever is later, according to § 63.7(a)(2)(ix).

(b) *What are the general requirements for performance test and performance evaluations?* You must:

(1) Conduct each performance test according to the requirements in § 63.7(e)(1).

(2) Except for opacity and visible emission observations, conduct three separate test runs for each performance test as specified in § 63.7(e)(3). Each test run must last at least 1 hour.

(3) Conduct each performance evaluation according to the requirements in § 63.8(e).

(4) Not conduct performance tests during periods of startup, shutdown, or malfunction, as specified in § 63.7(e)(1).

(5) Calculate the average emission rate for the performance test by calculating the emission rate for each individual test run in the units of the applicable emission limitation using Equation 2, 5, or 8 of § 63.1564, and determining the arithmetic average of the calculated emission rates.

(c) *What procedures must I use for an engineering assessment?* You may choose to use an engineering assessment to calculate the process vent flow rate, net heating value, TOC emission rate, and total organic HAP emission rate expected to yield the highest daily emission rate when determining the emission reduction or outlet concentration for the organic HAP standard for catalytic reforming units. If you use an engineering assessment, you must document all data, assumptions, and procedures to the satisfaction of the applicable permitting authority. An engineering assessment may include the approaches listed in paragraphs (c)(1) through (c)(4) of this section. Other engineering assessments may be used but are subject to review and approval by the applicable permitting authority.

(1) You may use previous test results provided the tests are representative of current operating practices at the process unit, and provided EPA methods or approved alternatives were used;

(2) You may use bench-scale or pilot-scale test data representative of the process under representative operating conditions;

(3) You may use maximum flow rate, TOC emission rate, organic HAP emission rate, or organic HAP or TOC concentration specified or implied within a permit limit applicable to the process vent; or

(4) You may use design analysis based on engineering principles, measurable process parameters, or physical or chemical laws or properties. Examples of analytical methods include, but are not limited to:

(i) Use of material balances based on process stoichiometry to estimate maximum TOC concentrations;

(ii) Calculation of hourly average maximum flow rate based on physical equipment design such as pump or blower capacities; and

(iii) Calculation of TOC concentrations based on saturation conditions.

(d) *Can I adjust the process or control device measured values when establishing an operating limit?* If you do a performance test to demonstrate compliance, you must base the process or control device operating limits for continuous parameter monitoring systems on the results measured during the performance test. You may adjust the values measured during the performance test according to the criteria in paragraphs (d)(1) through (3) of this section.

(1) If you must meet the HAP metal emission limitations in § 63.1564, you elect the option in paragraph (a)(1)(iii) in § 63.1564 (Ni lb/hr), and you use continuous parameter monitoring systems, you must establish an operating limit for the equilibrium catalyst Ni concentration based on the laboratory analysis of the equilibrium catalyst Ni concentration from the initial performance test. Section 63.1564(b)(2) allows you to adjust the laboratory measurements of the equilibrium catalyst Ni concentration to the maximum level. You must make this adjustment using Equation 1 of this section as follows:

$$Ecat\text{-Limit} = \frac{13 \text{ g Ni/hr}}{NiEmR1_{st}} \times Ecat_{st} \qquad (Eq.\ 1)$$

Where:

Ecat-Limit = Operating limit for equilibrium catalyst Ni concentration, mg/kg;

$NiEmR1_{st}$ = Average Ni emission rate calculated as the arithmetic average Ni emission rate using Equation 5 of this section for each performance test run, g Ni/hr; and

$Ecat_{st}$ = Average equilibrium Ni concentration from laboratory test results, mg/kg.

(2) If you must meet the HAP metal emission limitations in § 63.1564, you elect the option in paragraph (a)(1)(iv) in § 63.1564 (Ni lb/1,000 lb of coke burn-off), and you use continuous parameter monitoring systems, you must establish an operating limit for the equilibrium catalyst Ni concentration based on the laboratory analysis of the equilibrium catalyst Ni concentration from the initial performance test. Section 63.1564(b)(2) allows you to adjust the laboratory measurements of the equilibrium catalyst Ni concentration to the maximum level. You must make this adjustment using Equation 2 of this section as follows:

$$Ecat\text{-Limit} = \frac{1.0 \text{ mg/kg coke burn-off}}{NiEmR2_{st}} \times Ecat_{st} \qquad (Eq.\ 2)$$

Where:

$NiEmR2_{st}$ = Average Ni emission rate calculated as the arithmetic average Ni emission rate using Equation 8 of § 63.1564 for each performance test run, mg/kg coke burn-off.

(3) If you choose to adjust the equilibrium catalyst Ni concentration to the maximum level, you can't adjust any other monitored operating parameter (i.e., gas flow rate, voltage, pressure drop, liquid-to-gas ratio).

(4) Except as specified in paragraph (d)(3) of this section, if you use continuous parameter monitoring systems, you may adjust one of your monitored operating parameters (flow rate, voltage and secondary current, pressure drop, liquid-to-gas ratio) from the average of measured values during the performance test to the maximum value (or minimum value, if applicable) representative of worst-case operating conditions, if necessary. This adjustment of measured values may be done using control device design specifications, manufacturer recommendations, or other applicable information. You must provide supporting documentation and rationale in your Notification of Compliance Status, demonstrating to the satisfaction of your permitting authority, that your affected source complies with the applicable emission limit at the operating limit based on adjusted values.

(e) *Can I change my operating limit?* You may change the established operating limit by meeting the requirements in paragraphs (e)(1) through (3) of this section.

(1) You may change your established operating limit for a continuous parameter monitoring system by doing an additional performance test, a performance test in conjunction with an engineering assessment, or an engineering assessment to verify that, at the new operating limit, you are in compliance with the applicable emission limitation.

(2) You must establish a revised operating limit for your continuous parameter monitoring system if you make any change in process or operating conditions that could affect control system performance or you change designated conditions after the last performance or compliance tests were done. You can establish the revised operating limit as described in paragraph (e)(1) of this section.

(3) You may change your site-specific opacity operating limit or Ni operating limit only by doing a new performance test.

**§ 63.1572 What are my monitoring installation, operation, and maintenance requirements?**

(a) You must install, operate, and maintain each continuous emission monitoring system according to the requirements in paragraphs (a)(1) through (4) of this section.

(1) You must install, operate, and maintain each continuous emission monitoring system according to the requirements in Table 40 of this subpart.

(2) If you use a continuous emission monitoring system to meet the NSPS CO or $SO_2$ limit, you must conduct a performance evaluation of each continuous emission monitoring system according to the requirements in § 63.8 and Table 40 of this subpart. This requirement does not apply to an affected source subject to the NSPS that has already demonstrated initial compliance with the applicable performance specification.

(3) As specified in § 63.8(c)(4)(ii), each continuous emission monitoring system must complete a minimum of one cycle of operation (sampling, analyzing, and data recording) for each successive 15-minute period.

(4) Data must be reduced as specified in § 63.8(g)(2).

(b) You must install, operate, and maintain each continuous opacity monitoring system according to the requirements in paragraphs (b)(1) through (3) of this section.

(1) Each continuous opacity monitoring system must be installed, operated, and maintained according to the requirements in Table 40 of this subpart.

(2) If you use a continuous opacity monitoring system to meet the NSPS opacity limit, you must conduct a performance evaluation of each continuous opacity monitoring system according to the requirements in § 63.8 and Table 40 of this subpart. This requirement does not apply to an affected source subject to the NSPS that has already demonstrated initial compliance with the applicable performance specification.

(3) As specified in § 63.8(c)(4)(i), each continuous opacity monitoring system must complete a minimum of one cycle of sampling and analyzing for each successive 10-second period and one cycle of data recording for each successive 6-minute period.

(c) You must install, operate, and maintain each continuous parameter monitoring system according to the requirements in paragraphs (c)(1) through (5) of this section.

(1) The owner or operator shall install, operate, and maintain each continuous parameter monitoring system in a manner consistent with the manufacturer's specifications or other written procedures that provide adequate assurance that the equipment will monitor accurately. The owner or operator shall also meet the equipment specifications in Table 41 of this subpart if pH strips or colormetric tube sampling systems are used.

(2) The continuous parameter monitoring system must complete a minimum of one cycle of operation for each successive 15-minute period. You must have a minimum of four successive cycles of operation to have a valid hour of data (or at least two if a calibration check is performed during that hour or if the continuous parameter monitoring system is out-of-control).

(3) Each continuous parameter monitoring system must have valid hourly average data from at least 75 percent of the hours during which the process operated.

(4) Each continuous parameter monitoring system must determine and record the hourly average of all recorded readings and if applicable, the daily average of all recorded readings for each operating day. The daily average must cover a 24-hour period if operation is continuous or the number of hours of operation per day if operation is not continuous.

(5) Each continuous parameter monitoring system must record the results of each inspection, calibration, and validation check.

(d) You must monitor and collect data according to the requirements in paragraphs (d)(1) and (2) of this section.

(1) Except for monitoring malfunctions, associated repairs, and required quality assurance or control activities (including as applicable, calibration checks and required zero and span adjustments), you must conduct all monitoring in continuous operation (or collect data at all required intervals) at all times the affected source is operating.

(2) You may not use data recorded during monitoring malfunctions, associated repairs, and required quality assurance or control activities for purposes of this regulation, including data averages and calculations, for fulfilling a minimum data availability requirement, if applicable. You must use all the data collected during all other periods in assessing the operation of the control device and associated control system.

[67 FR 17773, Apr. 11, 2002, as amended at 70 FR 6940, Feb. 9, 2005]

**§ 63.1573 What are my monitoring alternatives?**

(a) *What are the approved alternatives for measuring gas flow rate?* (1) You may use this alternative to a continuous parameter monitoring system for the catalytic regenerator exhaust gas flow rate for your catalytic cracking unit if the unit does not introduce any other gas streams into the catalyst regeneration vent (i.e., complete combustion units with no additional combustion devices). You may also use this alternative to a continuous parameter monitoring system for the catalytic regenerator atmospheric exhaust gas flow rate for your catalytic reforming unit during the coke burn and rejuvenation cycles if the unit operates as a constant pressure system during these cycles. If you use this alternative, you shall use the same procedure for the performance test and for monitoring after the performance test. You shall:

(i) Install and operate a continuous parameter monitoring system to measure and record the hourly average volumetric air flow rate to the catalytic cracking unit or catalytic reforming unit regenerator. Or, you may determine and record the hourly average volumetric air flow rate to the catalytic cracking unit or catalytic reforming unit regenerator using the appropriate control room instrumentation.

(ii) Install and operate a continuous parameter monitoring system to measure and record the temperature of the gases entering the control device (or exiting the catalyst regenerator if you do not use an add-on control device).

(iii) Calculate and record the hourly average actual exhaust gas flow rate using Equation 1 of this section as follows:

$$Q_{gas} = (1.12 scfm/dscfm) \times (Q_{air} + Q_{other}) \times \left(\frac{Temp_{gas}}{293°K}\right) \times \left(\frac{1atm.}{P_{vent}}\right) \qquad \text{(Eq. 1)}$$

Where

$Q_{gas}$ = Hourly average actual gas flow rate, acfm;

1.12 = Default correction factor to convert gas flow from dry standard cubic feet per minute (dscfm) to standard cubic feet per minute (scfm);

$Q_{air}$ = Volumetric flow rate of air to regenerator, as determined from the control room instrumentations, dscfm;

$Q_{other}$ = Volumetric flow rate of other gases entering the regenerator as determined from the control room instrumentations, dscfm. (Examples of “other” gases include an oxygen-enriched air stream to catalytic cracking unit regenerators and a nitrogen stream to catalytic reforming unit regenerators.);

$Temp_{gas}$ = Temperature of gas stream in vent measured as near as practical to the control device or opacity monitor, °K. For wet scrubbers, temperature of gas prior to the wet scrubber; and

$P_{vent}$ = Absolute pressure in the vent measured as near as practical to the control device or opacity monitor, as applicable, atm. When used to assess the gas flow rate in the final atmospheric vent stack, you can assume $P_{vent}$ = 1 atm.

(2) You may use this alternative to calculating $Q_r$, the volumetric flow rate of exhaust gas for the catalytic cracking regenerator as required in Equation 1 of § 63.1564, if you have a gas analyzer installed in the catalytic cracking regenerator exhaust vent prior to the addition of air or other gas streams. You may measure upstream or downstream of an electrostatic precipitator, but you shall measure upstream of a carbon monoxide boiler. You shall:

(i) Install and operate a continuous parameter monitoring system to measure and record the hourly average volumetric air flow rate to the catalytic cracking unit regenerator. Or, you can determine and record the hourly average volumetric air flow rate to the catalytic cracking unit regenerator using the catalytic cracking unit control room instrumentation.

(ii) Install and operate a continuous gas analyzer to measure and record the concentration of carbon dioxide, carbon monoxide, and oxygen of the catalytic cracking regenerator exhaust.

(iii) Calculate and record the hourly average flow rate using Equation 2 of this section as follows:

$$Q_r = \frac{79 \times Q_{air} + \left(100 - \%O_{xy}\right) \times Q_{oxy}}{100 - \%CO_2 - \%CO - \%O_2} \qquad \text{(Eq. 2)}$$

Where:

$Q_r$ = Volumetric flow rate of exhaust gas from the catalyst regenerator before adding air or gas streams, dscm/min (dscf/min);

79 = Default concentration of nitrogen and argon in dry air, percent by volume (dry basis);

$\%O_{xy}$ = Oxygen concentration in oxygen-enriched air stream, percent by volume (dry basis);

$Q_{oxy}$ = Volumetric flow rate of oxygen-enriched air stream to regenerator as determined from the catalytic cracking unit control room instrumentations, dscm/min (dscf/min);

$\%CO_2$ = Carbon dioxide concentration in regenerator exhaust, percent by volume (dry basis);

CO = Carbon monoxide concentration in regenerator exhaust, percent by volume (dry basis); and

$\%O_2$ = Oxygen concentration in regenerator exhaust, percent by volume (dry basis).

(b) *What is the approved alternative for monitoring pH or alkalinity levels?* You may use the alternative in paragraph (b)(1) or (2) of this section for a catalytic reforming unit.

(1) You shall measure and record the pH of the water (or scrubbing liquid) exiting the wet scrubber or internal scrubbing system at least once an hour during coke burn-off and catalyst rejuvenation using pH strips as an

alternative to a continuous parameter monitoring system. The pH strips must meet the requirements in Table 41 of this subpart.

(2) You shall measure and record the alkalinity of the water (or scrubbing liquid) exiting the wet scrubber or internal scrubbing system at least once an hour during coke burn-off and catalyst rejuvenation using titration as an alternative to a continuous parameter monitoring system.

(c) *Can I use another type of monitoring system?* You may request approval from your permitting authority to use an automated data compression system. An automated data compression system does not record monitored operating parameter values at a set frequency (e.g., once every hour) but records all values that meet set criteria for variation from previously recorded values. Your request must contain a description of the monitoring system and data recording system, including the criteria used to determine which monitored values are recorded and retained, the method for calculating daily averages, and a demonstration that the system meets all of the criteria in paragraphs (c)(1) through (5) of this section:

(1) The system measures the operating parameter value at least once every hour;

(2) The system records at least 24 values each day during periods of operation;

(3) The system records the date and time when monitors are turned off or on;

(4) The system recognizes unchanging data that may indicate the monitor is not functioning properly, alerts the operator, and records the incident; and

(5) The system computes daily average values of the monitored operating parameter based on recorded data.

(d) *Can I monitor other process or control device operating parameters?* You may request approval to monitor parameters other than those required in this subpart. You must request approval if:

(1) You use a control device other than a thermal incinerator, boiler, process heater, flare, electrostatic precipitator, or wet scrubber;

(2) You use a combustion control device (e.g., incinerator, flare, boiler or process heater with a design heat capacity of at least 44 MW, boiler or process heater where the vent stream is introduced into the flame zone), electrostatic precipitator, or scrubber but want to monitor a parameter other than those specified; or

(3) You wish to use another type of continuous emission monitoring system that provides direct measurement of a pollutant (i.e., a PM or multi-metals HAP continuous emission monitoring system, a carbonyl sulfide/carbon disulfide continuous emission monitoring system, a TOC continuous emission monitoring system, or HCl continuous emission monitoring system).

(e) *How do I request to monitor alternative parameters?* You must submit a request for review and approval or disapproval to the Administrator. The request must include the information in paragraphs (e)(1) through (5) of this section.

(1) A description of each affected source and the parameter(s) to be monitored to determine whether the affected source will continuously comply with the emission limitations and an explanation of the criteria used to select the parameter(s).

(2) A description of the methods and procedures that will be used to demonstrate that the parameter can be used to determine whether the affected source will continuously comply with the emission limitations and the schedule for this demonstration. You must certify that you will establish an operating limit for the monitored parameter(s) that represents the conditions in existence when the control device is being properly operated and maintained to meet the emission limitation.

(3) The frequency and content of monitoring, recording, and reporting, if monitoring and recording are not continuous. You also must include the rationale for the proposed monitoring, recording, and reporting requirements.

(4) Supporting calculations.

(5) Averaging time for the alternative operating parameter.

(f) *How do I apply for alternative monitoring requirements if my catalytic cracking unit is equipped with a wet scrubber and I have approved alternative monitoring requirements under the new source performance standards for petroleum refineries?* (1) You may request alternative monitoring requirements according to the procedures in this paragraph if you meet each of the conditions in paragraphs (f)(1)(i) through (iii) of this section:

(i) Your fluid catalytic cracking unit regenerator vent is subject to the PM limit in 40 CFR 60.102(a)(1) and uses a wet scrubber for PM emissions control;

(ii) You have alternative monitoring requirements for the continuous opacity monitoring system requirement in 40 CFR 60.105(a)(1) approved by the Administrator; and

(iii) You are required by this subpart to install, operate, and maintain a continuous opacity monitoring system for the same catalytic cracking unit regenerator vent for which you have approved alternative monitoring requirements.

(2) You can request approval to use an alternative monitoring method prior to submitting your notification of compliance status, in your notification of compliance status, or at any time.

(3) You must submit a copy of the approved alternative monitoring requirements along with a monitoring plan that includes a description of the continuous monitoring system or method, including appropriate operating parameters that will be monitored, test results demonstrating compliance with the opacity limit used to establish an enforceable operating limit(s), and the frequency of measuring and recording to establish continuous compliance. If applicable, you must also include operation and maintenance requirements for the continuous monitoring system.

(4) We will contact you within 30 days of receipt of your application to inform you of approval or of our intent to disapprove your request.

[67 FR 17773, Apr. 11, 2002, as amended at 70 FR 6940, Feb. 9, 2005]

**Notifications, Reports, and Records**

**§ 63.1574 What notifications must I submit and when?**

(a) Except as allowed in paragraphs (a)(1) through (3) of this section, you must submit all of the notifications in §§ 63.6(h), 63.7(b) and (c), 63.8(e), 63.8(f)(4), 63.8(f)(6), and 63.9(b) through (h) that apply to you by the dates specified.

(1) You must submit the notification of your intention to construct or reconstruct according to § 63.9(b)(5) unless construction or reconstruction had commenced and initial startup had not occurred before April 11, 2002. In this case, you must submit the notification as soon as practicable before startup but no later than July 10, 2002. This deadline also applies to the application for approval of construction or reconstruction and approval of construction or reconstruction based on State preconstruction review required in §§ 63.5(d)(1)(i) and 63.5(f)(2).

(2) You must submit the notification of intent to conduct a performance test required in § 63.7(b) at least 30 calendar days before the performance test is scheduled to begin (instead of 60 days).

(3) If you are required to conduct a performance test, performance evaluation, design evaluation, opacity observation, visible emission observation, or other initial compliance demonstration, you must submit a notification of compliance status according to § 63.9(h)(2)(ii). You can submit this information in an operating permit application, in an amendment to an operating permit application, in a separate submission, or in any combination. In a State with an approved operating permit program where delegation of authority under section 112(l) of the CAA has not been requested or approved, you must provide a duplicate notification to the applicable Regional Administrator. If the required information has been submitted previously, you do not have to provide a separate notification of compliance

status. Just refer to the earlier submissions instead of duplicating and resubmitting the previously submitted information.

(i) For each initial compliance demonstration that does not include a performance test, you must submit the Notification of Compliance Status no later than 30 calendar days following completion of the initial compliance demonstration.

(ii) For each initial compliance demonstration that includes a performance test, you must submit the notification of compliance status, including the performance test results, no later than 150 calendar days after the compliance date specified for your affected source in § 63.1563.

(b) As specified in § 63.9(b)(2), if you startup your new affected source before April 11, 2002, you must submit the initial notification no later than August 9, 2002.

(c) If you startup your new or reconstructed affected source on or after April 11, 2002, you must submit the initial notification no later than 120 days after you become subject to this subpart.

(d) You also must include the information in Table 42 of this subpart in your notification of compliance status.

(e) If you request an extension of compliance for an existing catalytic cracking unit as allowed in § 63.1563(c), you must submit a notification to your permitting authority containing the required information by October 13, 2003.

(f) As required by this subpart, you must prepare and implement an operation, maintenance, and monitoring plan for each control system and continuous monitoring system for each affected source. The purpose of this plan is to detail the operation, maintenance, and monitoring procedures you will follow.

(1) You must submit the plan to your permitting authority for review and approval along with your notification of compliance status. While you do not have to include the entire plan in your part 70 or 71 permit, you must include the duty to prepare and implement the plan as an applicable requirement in your part 70 or 71 operating permit. You must submit any changes to your permitting authority for review and approval and comply with the plan until the change is approved.

(2) Each plan must include, at a minimum, the information specified in paragraphs (f)(2)(i) through (xii) of this section.

(i) Process and control device parameters to be monitored for each affected source, along with established operating limits.

(ii) Procedures for monitoring emissions and process and control device operating parameters for each affected source.

(iii) Procedures that you will use to determine the coke burn-rate, the volumetric flow rate (if you use process data rather than direct measurement), and the rate of combustion of liquid or solid fossil fuels if you use an incinerator-waste heat boiler to burn the exhaust gases from a catalyst regenerator.

(iv) Procedures and analytical methods you will use to determine the equilibrium catalyst Ni concentration, the equilibrium catalyst Ni concentration monthly rolling average, and the hourly or hourly average Ni operating value.

(v) Procedures you will use to determine the pH of the water (or scrubbing liquid) exiting a wet scrubber if you use pH strips.

(vi) Procedures you will use to determine the HCl concentration of gases from a catalytic reforming unit when you use a colormetric tube sampling system, including procedures for correcting for pressure (if applicable to the sampling equipment) and the sampling locations that will be used for compliance monitoring purposes.

(vii) Procedures you will use to determine the gas flow rate for a catalytic cracking unit if you use the alternative procedure based on air flow rate and temperature.

(viii) Monitoring schedule, including when you will monitor and when you will not monitor an affected source (e.g., during the coke burn-off, regeneration process).

(ix) Quality control plan for each continuous opacity monitoring system and continuous emission monitoring system you use to meet an emission limit in this subpart. This plan must include procedures you will use for calibrations, accuracy audits, and adjustments to the system needed to meet applicable requirements for the system.

(x) Maintenance schedule for each monitoring system and control device for each affected source that is generally consistent with the manufacturer's instructions for routine and long-term maintenance.

(xi) If you use a fixed-bed gas-solid adsorption system to control emissions from a catalytic reforming unit, you must implement corrective action procedures if the HCl concentration measured at the selected compliance monitoring sampling location within the bed exceeds the operating limit. These procedures must require, at minimum, repeat measurement and recording of the HCl concentration in the adsorption system exhaust gases and at the selected compliance monitoring sampling location within the bed. If the HCl concentration at the selected compliance monitoring location within the bed is above the operating limit during the repeat measurement while the HCl concentration in the adsorption system exhaust gases remains below the operating limit, the adsorption bed must be replaced as soon as practicable. Your procedures must specify the sampling frequency that will be used to monitor the HCl concentration in the adsorption system exhaust gases subsequent to the repeat measurement and prior to replacement of the sorbent material (but not less frequent than once every 4 hours during coke burn-off). If the HCl concentration of the adsorption system exhaust gases is above the operating limit when measured at any time, the adsorption bed must be replaced within 24 hours or before the next regeneration cycle, whichever is longer.

(xii) Procedures that will be used for purging the catalyst if you do not use a control device to comply with the organic HAP emission limits for catalytic reforming units. These procedures will include, but are not limited to, specification of the minimum catalyst temperature and the minimum cumulative volume of gas per mass of catalyst used for purging prior to uncontrolled releases (i.e., during controlled purging events); the maximum purge gas temperature for uncontrolled purge events; and specification of the monitoring systems that will be used to monitor and record data during each purge event.

[67 FR 17773, Apr. 11, 2002, as amended at 70 FR 6941, Feb. 9, 2005]

**§ 63.1575 What reports must I submit and when?**

(a) You must submit each report in Table 43 of this subpart that applies to you.

(b) Unless the Administrator has approved a different schedule, you must submit each report by the date in Table 43 of this subpart and according to the requirements in paragraphs (b)(1) through (5) of this section.

(1) The first compliance report must cover the period beginning on the compliance date that is specified for your affected source in § 63.1563 and ending on June 30 or December 31, whichever date is the first date following the end of the first calendar half after the compliance date that is specified for your affected source in § 63.1563.

(2) The first compliance report must be postmarked or delivered no later than July 31 or January 31, whichever date follows the end of the first calendar half after the compliance date that is specified for your affected source in § 63.1563.

(3) Each subsequent compliance report must cover the semiannual reporting period from January 1 through June 30 or the semiannual reporting period from July 1 through December 31.

(4) Each subsequent compliance report must be postmarked or delivered no later than July 31 or January 31, whichever date is the first date following the end of the semiannual reporting period.

(5) For each affected source that is subject to permitting regulations pursuant to part 70 or 71 of this chapter, and if the permitting authority has established dates for submitting semiannual reports pursuant to § 70.6(a)(3)(iii)(A) or § 71.6(a)(3)(iii)(A) of this chapter, you may submit the first and subsequent compliance reports according to the dates the permitting authority has established instead of according to the dates in paragraphs (b)(1) through (4) of this section.

(c) The compliance report must contain the information required in paragraphs (c)(1) through (4) of this section.

(1) Company name and address.

(2) Statement by a responsible official, with that official's name, title, and signature, certifying the accuracy of the content of the report.

(3) Date of report and beginning and ending dates of the reporting period.

(4) If there are no deviations from any emission limitation that applies to you and there are no deviations from the requirements for work practice standards, a statement that there were no deviations from the emission limitations or work practice standards during the reporting period and that no continuous emission monitoring system or continuous opacity monitoring system was inoperative, inactive, malfunctioning, out-of-control, repaired, or adjusted.

(d) For each deviation from an emission limitation and for each deviation from the requirements for work practice standards that occurs at an affected source where you are not using a continuous opacity monitoring system or a continuous emission monitoring system to comply with the emission limitation or work practice standard in this subpart, the compliance report must contain the information in paragraphs (c)(1) through (3) of this section and the information in paragraphs (d)(1) through (3) of this section.

(1) The total operating time of each affected source during the reporting period.

(2) Information on the number, duration, and cause of deviations (including unknown cause, if applicable), as applicable, and the corrective action taken.

(3) Information on the number, duration, and cause for monitor downtime incidents (including unknown cause, if applicable, other than downtime associated with zero and span and other daily calibration checks).

(e) For each deviation from an emission limitation occurring at an affected source where you are using a continuous opacity monitoring system or a continuous emission monitoring system to comply with the emission limitation, you must include the information in paragraphs (d)(1) through (3) of this section and the information in paragraphs (e)(1) through (13) of this section.

(1) The date and time that each malfunction started and stopped.

(2) The date and time that each continuous opacity monitoring system or continuous emission monitoring system was inoperative, except for zero (low-level) and high-level checks.

(3) The date and time that each continuous opacity monitoring system or continuous emission monitoring system was out-of-control, including the information in § 63.8(c)(8).

(4) The date and time that each deviation started and stopped, and whether each deviation occurred during a period of startup, shutdown, or malfunction or during another period.

(5) A summary of the total duration of the deviation during the reporting period (recorded in minutes for opacity and hours for gases and in the averaging period specified in the regulation for other types of emission limitations), and the total duration as a percent of the total source operating time during that reporting period.

(6) A breakdown of the total duration of the deviations during the reporting period and into those that are due to startup, shutdown, control equipment problems, process problems, other known causes, and other unknown causes.

(7) A summary of the total duration of downtime for the continuous opacity monitoring system or continuous emission monitoring system during the reporting period (recorded in minutes for opacity and hours for gases and in the averaging time specified in the regulation for other types of standards), and the total duration of downtime for the continuous opacity monitoring system or continuous emission monitoring system as a percent of the total source operating time during that reporting period.

(8) A breakdown of the total duration of downtime for the continuous opacity monitoring system or continuous emission monitoring system during the reporting period into periods that are due to monitoring equipment malfunctions, non-monitoring equipment malfunctions, quality assurance/quality control calibrations, other known causes, and other unknown causes.

(9) An identification of each HAP that was monitored at the affected source.

(10) A brief description of the process units.

(11) The monitoring equipment manufacturer(s) and model number(s).

(12) The date of the latest certification or audit for the continuous opacity monitoring system or continuous emission monitoring system.

(13) A description of any change in the continuous emission monitoring system or continuous opacity monitoring system, processes, or controls since the last reporting period.

(f) You also must include the information required in paragraphs (f)(1) through (2) of this section in each compliance report, if applicable.

(1) A copy of any performance test done during the reporting period on any affected unit. The report may be included in the next semiannual report. The copy must include a complete report for each test method used for a particular kind of emission point tested. For additional tests performed for a similar emission point using the same method, you must submit the results and any other information required, but a complete test report is not required. A complete test report contains a brief process description; a simplified flow diagram showing affected processes, control equipment, and sampling point locations; sampling site data; description of sampling and analysis procedures and any modifications to standard procedures; quality assurance procedures; record of operating conditions during the test; record of preparation of standards; record of calibrations; raw data sheets for field sampling; raw data sheets for field and laboratory analyses; documentation of calculations; and any other information required by the test method.

(2) Any requested change in the applicability of an emission standard (e.g., you want to change from the PM standard to the Ni standard for catalytic cracking units or from the HCl concentration standard to percent reduction for catalytic reforming units) in your periodic report. You must include all information and data necessary to demonstrate compliance with the new emission standard selected and any other associated requirements.

(g) You may submit reports required by other regulations in place of or as part of the compliance report if they contain the required information.

(h) The reporting requirements in paragraphs (h)(1) and (2) of this section apply to startups, shutdowns, and malfunctions:

(1) When actions taken to respond are consistent with the plan, you are not required to report these events in the semiannual compliance report and the reporting requirements in §§ 63.6(e)(3)(iii) and 63.10(d)(5) do not apply.

(2) When actions taken to respond are not consistent with the plan, you must report these events and the response taken in the semiannual compliance report. In this case, the reporting requirements in §§ 63.6(e)(3)(iv) and 63.10(d)(5) do not apply.

(i) If the applicable permitting authority has approved a period of planned maintenance for your catalytic cracking unit according to the requirements in paragraph (j) of this section, you must include the following information in your compliance report.

(1) In the compliance report due for the 6-month period before the routine planned maintenance is to begin, you must include a full copy of your written request to the applicable permitting authority and written approval received from the applicable permitting authority.

(2) In the compliance report due after the routine planned maintenance is complete, you must include a description of the planned routine maintenance that was performed for the control device during the previous 6-month period, and the total number of hours during those 6 months that the control device did not meet the emission limitations and monitoring requirements as a result of the approved routine planned maintenance.

(j) If you own or operate multiple catalytic cracking units that are served by a single wet scrubber emission control device (e.g., a Venturi scrubber), you may request the applicable permitting authority to approve a period of planned routine maintenance for the control device needed to meet requirements in your operation, maintenance, and monitoring plan. You must present data to the applicable permitting authority demonstrating that the period of planned maintenance results in overall emissions reductions. During this pre-approved time period, the emission control device may be taken out of service while maintenance is performed on the control device and/or one of the process units while the remaining process unit(s) continue to operate. During the period the emission control device is unable to operate, the emission limits, operating limits, and monitoring requirements applicable to the unit that is operating and the wet scrubber emission control device do not apply. The applicable permitting authority may require that you take specified actions to minimize emissions during the period of planned maintenance.

(1) You must submit a written request to the applicable permitting authority at least 6 months before the planned maintenance is scheduled to begin with a copy to the EPA Regional Administrator.

(2) Your written request must contain the information in paragraphs (j)(2)(i) through (v) of this section.

(i) A description of the planned routine maintenance to be performed during the next 6 months and why it is necessary.

(ii) The date the planned maintenance will begin and end.

(iii) A quantified estimate of the HAP and criteria pollutant emissions that will be emitted during the period of planned maintenance.

(iv) An analysis showing the emissions reductions resulting from the planned maintenance as opposed to delaying the maintenance until the next unit turnaround.

(v) Actions you will take to minimize emissions during the period of planned maintenance.

**§ 63.1576 What records must I keep, in what form, and for how long?**

(a) You must keep the records specified in paragraphs (a)(1) through (3) of this section.

(1) A copy of each notification and report that you submitted to comply with this subpart, including all documentation supporting any initial notification or Notification of Compliance Status that you submitted, according to the requirements in § 63.10(b)(2)(xiv).

(2) The records in § 63.6(e)(3)(iii) through (v) related to startup, shutdown, and malfunction.

(3) Records of performance tests, performance evaluations, and opacity and visible emission observations as required in § 63.10(b)(2)(viii).

(b) For each continuous emission monitoring system and continuous opacity monitoring system, you must keep the records required in paragraphs (b)(1) through (5) of this section.

(1) Records described in § 63.10(b)(2)(vi) through (xi).

(2) Monitoring data for continuous opacity monitoring systems during a performance evaluation as required in § 63.6(h)(7)(i) and (ii).

(3) Previous (i.e., superceded) versions of the performance evaluation plan as required in § 63.8(d)(3).

(4) Requests for alternatives to the relative accuracy test for continuous emission monitoring systems as required in § 63.8(f)(6)(i).

(5) Records of the date and time that each deviation started and stopped, and whether the deviation occurred during a period of startup, shutdown, or malfunction or during another period.

(c) You must keep the records in § 63.6(h) for visible emission observations.

(d) You must keep records required by Tables 6, 7, 13, and 14 of this subpart (for catalytic cracking units); Tables 20, 21, 27 and 28 of this subpart (for catalytic reforming units); Tables 34 and 35 of this subpart (for sulfur recovery units); and Table 39 of this subpart (for bypass lines) to show continuous compliance with each emission limitation that applies to you.

(e) You must keep a current copy of your operation, maintenance, and monitoring plan onsite and available for inspection. You also must keep records to show continuous compliance with the procedures in your operation, maintenance, and monitoring plan.

(f) You also must keep the records of any changes that affect emission control system performance including, but not limited to, the location at which the vent stream is introduced into the flame zone for a boiler or process heater.

(g) Your records must be in a form suitable and readily available for expeditious review according to § 63.10(b)(1).

(h) As specified in § 63.10(b)(1), you must keep each record for 5 years following the date of each occurrence, measurement, maintenance, corrective action, report, or record.

(i) You must keep each record on site for at least 2 years after the date of each occurrence, measurement, maintenance, corrective action, report, or record, according to § 63.10(b)(1). You can keep the records offsite for the remaining 3 years.

[67 FR 17773, Apr. 11, 2002, as amended at 70 FR 6942, Feb. 9, 2005]

**Other Requirements and Information**

**§ 63.1577 What parts of the General Provisions apply to me?**

Table 44 of this subpart shows which parts of the General Provisions in §§ 63.1 through 63.15 apply to you.

**§ 63.1578 Who implements and enforces this subpart?**

(a) This subpart can be implemented and enforced by us, the U.S. EPA, or a delegated authority such as your State, local, or tribal agency. If the U.S. EPA Administrator has delegated authority to your State, local, or tribal agency, then that Agency has the authority to implement and enforce this subpart. You should contact your U.S. EPA Regional Office to find out if this subpart is delegated to your State, local, or tribal agency.

(b) In delegating implementation and enforcement authority of this subpart to a State, local, or tribal agency under 40 CFR part 63, subpart E, the authorities contained in paragraph (c) of this section are retained by the Administrator of the U.S. EPA and are not transferred to the State, local, or tribal agency.

(c) The authorities that will not be delegated to State, local, or tribal agencies are listed in paragraphs (c)(1) through (5) of this section.

(1) Approval of alternatives to the non-opacity emission limitations and work practice standards in §§ 63.1564 through 63.1569 under § 63.6(g).

(2) Approval of alternative opacity emission limitations in §§ 63.1564 through 63.1569 under § 63.6(h)(9).

(3) Approval of major alternatives to test methods under § 63.7(e)(2)(ii) and (f) and as defined in § 63.90.

(4) Approval of major alternatives to monitoring under § 63.8(f) and as defined in § 63.90.

(5) Approval of major alternatives to recordkeeping and reporting under § 63.10(f) and as defined in § 63.90.

**§ 63.1579 What definitions apply to this subpart?**

Terms used in this subpart are defined in the Clean Air Act (CAA), in 40 CFR 63.2, the General Provisions of this part (§§ 63.1 through 63.15), and in this section as listed.

*Boiler* means any enclosed combustion device that extracts useful energy in the form of steam and is not an incinerator.

*Catalytic cracking unit* means a refinery process unit in which petroleum derivatives are continuously charged; hydrocarbon molecules in the presence of a catalyst suspended in a fluidized bed are fractured into smaller molecules, or react with a contact material suspended in a fluidized bed to improve feedstock quality for additional processing; and the catalyst or contact material is continuously regenerated by burning off coke and other deposits. The unit includes, but is not limited to, the riser, reactor, regenerator, air blowers, spent catalyst or contact material stripper, catalyst or contact material recovery equipment, and regenerator equipment for controlling air pollutant emissions and equipment used for heat recovery.

*Catalytic cracking unit catalyst regenerator* means one or more regenerators (multiple regenerators) which comprise that portion of the catalytic cracking unit in which coke burn-off and catalyst or contact material regeneration occurs and includes the regenerator combustion air blower(s).

*Catalytic reforming unit* means a refinery process unit that reforms or changes the chemical structure of naphtha into higher octane aromatics through the use of a metal catalyst and chemical reactions that include dehydrogenation, isomerization, and hydrogenolysis. The catalytic reforming unit includes the reactor, regenerator (if separate), separators, catalyst isolation and transport vessels (e.g., lock and lift hoppers), recirculation equipment, scrubbers, and other ancillary equipment.

*Catalytic reforming unit regenerator* means one or more regenerators which comprise that portion of the catalytic reforming unit and ancillary equipment in which the following regeneration steps typically are performed: depressurization, purge, coke burn-off, catalyst rejuvenation with a chloride (or other halogenated) compound(s), and a final purge. The catalytic reforming unit catalyst regeneration process can be done either as a semi-regenerative, cyclic, or continuous regeneration process.

*Coke burn-off* means the coke removed from the surface of the catalytic cracking unit catalyst or the catalytic reforming unit catalyst by combustion in the catalyst regenerator. The rate of coke burn-off is calculated using Equation 2 in § 63.1564.

*Combustion device* means an individual unit of equipment such as a flare, incinerator, process heater, or boiler used for the destruction of organic HAP or VOC.

*Combustion zone* means the space in an enclosed combustion device (e.g., vapor incinerator, boiler, furnace, or process heater) occupied by the organic HAP and any supplemental fuel while burning. The combustion zone includes any flame that is visible or luminous as well as that space outside the flame envelope in which the organic HAP continues to be oxidized to form the combustion products.

*Contact material* means any substance formulated to remove metals, sulfur, nitrogen, or any other contaminants from petroleum derivatives.

*Continuous regeneration reforming* means a catalytic reforming process characterized by continuous flow of catalyst material through a reactor where it mixes with feedstock, and a portion of the catalyst is continuously removed and sent to a special regenerator where it is regenerated and continuously recycled back to the reactor.

*Control device* means any equipment used for recovering, removing, or oxidizing HAP in either gaseous or solid form. Such equipment includes, but is not limited to, condensers, scrubbers, electrostatic precipitators, incinerators, flares, boilers, and process heaters.

*Cyclic regeneration reforming* means a catalytic reforming process characterized by continual batch regeneration of catalyst in situ in any one of several reactors (e.g., 4 or 5 separate reactors) that can be isolated from and returned to the reforming operation while maintaining continuous reforming process operations (i.e., feedstock continues flowing through the remaining reactors without change in feed rate or product octane).

*Deviation* means any instance in which an affected source subject to this subpart, or an owner or operator of such a source:

(1) Fails to meet any requirement or obligation established by this subpart, including but not limited to any emission limit, operating limit, or work practice standard;

(2) Fails to meet any term or condition that is adopted to implement an applicable requirement in this subpart and that is included in the operating permit for any affected source required to obtain such a permit; or

(3) Fails to meet any emission limit, operating limit, or work practice standard in this subpart during startup, shutdown, or malfunction, regardless of whether or not such failure is permitted by this subpart.

*Emission limitation* means any emission limit, opacity limit, operating limit, or visible emission limit.

*Flame zone* means the portion of a combustion chamber of a boiler or process heater occupied by the flame envelope created by the primary fuel.

*Flow indicator* means a device that indicates whether gas is flowing, or whether the valve position would allow gas to flow, in or through a line.

*Fuel gas system* means the offsite and onsite piping and control system that gathers gaseous streams generated by the source, may blend them with sources of gas, if available, and transports the blended gaseous fuel at suitable pressures for use as fuel in heaters, furnaces, boilers, incinerators, gas turbines, and other combustion devices located within or outside of the refinery. The fuel is piped directly to each individual combustion device, and the system typically operates at pressures over atmospheric. The gaseous streams can contain a mixture of methane, light hydrocarbons, hydrogen, and other miscellaneous species.

*HCl* means for the purposes of this subpart, gaseous emissions of hydrogen chloride that serve as a surrogate measure for total emissions of hydrogen chloride and chlorine as measured by Method 26 or 26A in appendix A to part 60 of this chapter or an approved alternative method.

*Incinerator* means an enclosed combustion device that is used for destroying organic compounds, with or without heat recovery. Auxiliary fuel may be used to heat waste gas to combustion temperatures. An incinerator may use a catalytic combustion process where a substance is introduced into an exhaust stream to burn or oxidize contaminants while the substances itself remains intact, or a thermal process which uses elevated temperatures as a primary means to burn or oxidize contaminants.

*Internal scrubbing system* means a wet scrubbing, wet injection, or caustic injection control device that treats (in-situ) the catalytic reforming unit recirculating coke burn exhaust gases for acid (HCl) control during reforming catalyst regeneration upstream of the atmospheric coke burn vent.

*Ni* means, for the purposes of this subpart, particulate emissions of nickel that serve as a surrogate measure for total emissions of metal HAP, including but not limited to: antimony, arsenic, beryllium, cadmium, chromium, cobalt, lead, manganese, nickel, and selenium as measured by Method 29 in appendix A to part 60 of this chapter or by an approved alternative method.

*Nonmethane TOC* means, for the purposes of this subpart, emissions of total organic compounds, excluding methane, that serve as a surrogate measure of the total emissions of organic HAP compounds including, but not

limited to, acetaldehyde, benzene, hexane, phenol, toluene, and xylenes and nonHAP VOC as measured by Method 25 in appendix A to part 60 of this chapter, by the combination of Methods 18 and 25A in appendix A to part 60 of this chapter, or by an approved alternative method.

*Oxidation control system* means an emission control system which reduces emissions from sulfur recovery units by converting these emissions to sulfur dioxide.

*PM* means, for the purposes of this subpart, emissions of particulate matter that serve as a surrogate measure of the total emissions of particulate matter and metal HAP contained in the particulate matter, including but not limited to: antimony, arsenic, beryllium, cadmium, chromium, cobalt, lead, manganese, nickel, and selenium as measured by Methods 5B or 5F in appendix A to part 60 of this chapter or by an approved alternative method.

*Process heater* means an enclosed combustion device that primarily transfers heat liberated by burning fuel directly to process streams or to heat transfer liquids other than water.

*Process vent* means, for the purposes of this subpart, a gas stream that is continuously or periodically discharged during normal operation of a catalytic cracking unit, catalytic reforming unit, or sulfur recovery unit, including gas streams that are discharged directly to the atmosphere, gas streams that are routed to a control device prior to discharge to the atmosphere, or gas streams that are diverted through a product recovery device line prior to control or discharge to the atmosphere.

*Reduced sulfur compounds* means hydrogen sulfide, carbonyl sulfide, and carbon disulfide.

*Reduction control system* means an emission control system which reduces emissions from sulfur recovery units by converting these emissions to hydrogen sulfide.

*Responsible official* means responsible official as defined in 40 CFR 70.2.

*Semi-regenerative reforming* means a catalytic reforming process characterized by shutdown of the entire reforming unit (e.g., which may employ three to four separate reactors) at specified intervals or at the owner's or operator's convenience for in situ catalyst regeneration.

*Sulfur recovery unit* means a process unit that recovers elemental sulfur from gases that contain reduced sulfur compounds and other pollutants, usually by a vapor-phase catalytic reaction of sulfur dioxide and hydrogen sulfide. This definition does not include a unit where the modified reaction is carried out in a water solution which contains a metal ion capable of oxidizing the sulfide ion to sulfur, e.g., the LO-CAT II process.

*TOC* means, for the purposes of this subpart, emissions of total organic compounds that serve as a surrogate measure of the total emissions of organic HAP compounds including, but not limited to, acetaldehyde, benzene, hexane, phenol, toluene, and xylenes and nonHAP VOC as measured by Method 25A in appendix A to part 60 of this chapter or by an approved alternative method.

*TRS* means, for the purposes of this subpart, emissions of total reduced sulfur compounds, expressed as an equivalent sulfur dioxide concentration, that serve as a surrogate measure of the total emissions of sulfide HAP carbonyl sulfide and carbon disulfide as measured by Method 15 in appendix A to part 60 of this chapter or by an approved alternative method.

*Work practice standard* means any design, equipment, work practice, or operational standard, or combination thereof, that is promulgated pursuant to section 112(h) of the CAA.

[67 FR 17773, Apr. 11, 2002, as amended at 70 FR 6942, Feb. 9, 2005]

**Table 1 to Subpart UUU of Part 63—Metal HAP Emission Limits for Catalytic Cracking Units**

As stated in § 63.1564(a)(1), you shall meet each emission limitation in the following table that applies to you.

| For each new or existing catalytic cracking unit . . . | You shall meet the following emission limits for each catalyst regenerator vent . . . |
|---|---|
| 1. Subject to new source performance standard (NSPS) for PM in 40 CFR 60.102 | PM emissions must not the exceed 1.0 kilogram (kg) per 1,000 kg (1.0 lb/1,000 lb) of coke burn-off in the catalyst regenerator; if the discharged gases pass through an incinerator or waste heat boiler in which you burn auxiliary or in supplemental liquid or solid fossil fuel, the incremental rate of PM emissions must not exceed 43.0 grams per Gigajoule (g/GJ) or 0.10 pounds per million British thermal units (lb/million Btu) of heat input attributable to the liquid or solid fossil fuel; and the opacity of emissions must not exceed 30 percent, except for one 6-minute average opacity reading in any 1-hour period. |
| 2. Option 1: NSPS requirements not subject to the NSPS for PM in 40 CFR 60.102 | PM emissions must not exceed 1.0 kg/1,000 kg (1.0 lb/1,000 lb) of coke burn-off in the catalyst regenerator; if the discharged gases pass through an incinerator or waste heat boiler in which you burn auxiliary or supplemental liquid or solid fossil fuel, the incremental rate of PM must not exceed 43.0 g/GJ (0.10 lb/million Btu) of heat input attributable to the liquid or solid fossil fuel; and the opacity of emissions must not exceed 30 percent, except for one 6-minute average opacity reading in any 1-hour period. |
| 3. Option 2: PM limit not subject to the NSPS for PM in 40 CFR 60.102 | PM emissions must not exceed 1.0 kg/1,000 kg (1.0 lb/1,000 lbs) of coke burn-off in the catalyst regenerator. |
| 4. Option 3: Ni lb/hr not subject to the NSPS for PM in 40 CFR 60.102 | Nickel (Ni) emissions must not exceed 13,000 milligrams per hour (mg/hr) (0.029 lb/hr). |
| 5. Option 4: Ni Lb/1,000 lbs of coke burn-off not subject to the NSPS for PM in 40 CFR 60.102 | Ni emissions must not exceed 1.0 mg/kg (0.001 lb/1,000 lbs) of coke burn-off in the catalyst regenerator. |

[67 FR 17773, Apr. 11, 2002, as amended at 70 FR 6942, Feb. 9, 2005]

**Table 2 to Subpart UUU of Part 63—Operating Limits for Metal HAP Emissions From Catalytic Cracking Units**

As stated in § 63.1564(a)(2), you shall meet each operating limit in the following table that applies to you.

| For each new or existing catalytic cracking unit . . . | For this type of continuous monitoring system . . . | For this type of control device . . . | You shall meet this operating limit . . . |
|---|---|---|---|
| 1. Subject to the NSPS for PM in 40 CFR 60.102. | Continuous opacity monitoring system. | Not applicable | Not applicable. |
| 2. Option 1: NSPS requirements not subject to the NSPS for PM in 40 CFR 60.102. | Continuous opacity monitoring system. | Not applicable | Not applicable. |
| 3. Option 2: PM limit not subject to the NSPS for PM in 40 CFR 60.102. | a. Continuous opacity monitoring system. | Electrostatic precipitator | Maintain the hourly average opacity of emissions from your catalyst regenerator vent no higher than the site-specific opacity limit established during the performance test. |
| | b. Continuous parameter monitoring systems. | Electrostatic precipitator | Maintain the daily average gas flow rate no higher than the limit established in the performance test; and maintain the daily average voltage and secondary current (or total power input) above the limit established in the performance test. |

| For each new or existing catalytic cracking unit . . . | For this type of continuous monitoring system . . . | For this type of control device . . . | You shall meet this operating limit . . . |
|---|---|---|---|
| | c. Continuous parameter monitoring systems. | Wet scrubber | Maintain the daily average pressure drop above the limit established in the performance test (not applicable to a wet scrubber of the non-venturi jet-ejector design); and maintain the daily average liquid-to-gas ratio above the limit established in the performance test. |
| 4. Option 3: Ni lb/hr not subject to the NSPS for PM in 40 CFR 60.102. | a. Continuous opacity monitoring system. | Electrostatic precipitator | Maintain the daily average Ni operating value no higher than the limit established during the performance test. |
| | b. Continuous parameter monitoring systems. | i. Electrostatic precipitator | Maintain the daily average gas flow rate no higher than the limit established during the performance test; maintain the monthly rolling average of the equilibrium catalyst Ni concentration no higher than the limit established during the performance test; and maintain the daily average voltage and secondary current (or total power input) above the established during the performance test. |
| | | ii. Wet scrubber | Maintain the monthly rolling average of the equilibrium catalyst Ni concentration no higher than the limit established during the performance test; maintain the daily average pressure drop above the limit established during the performance test (not applicable to a non-venturi wet scrubber of the jet-ejector design); and maintain the daily average liquid-to-gas ratio above the limit established during the performance test. |
| 5. Option 4: Ni lb/1,000 lbs of coke burn-off not subject to the NSPS for PM in 40 CFR 60.102 | a. Continuous opacity monitoring system | Electrostatic precipitator | Maintain the daily average Ni operating value no higher than the Ni operating limit established during the performance test. |
| | b. Continuous parameter monitoring systems. | i. Electrostatic precipitator | Maintain the monthly rolling average of the equilibrium catalyst Ni concentration no higher than the limit established during the performance test; and maintain the daily average voltage and secondary current for total power input) above the limit established during the performance test. |
| | | ii. Wet scrubber | Maintain the monthly rolling average of the equilibrium catalyst Ni concentration no higher than the limit established during the performance test; maintain the daily average pressure drop above the limit established during the performance test (not applicable to a non-venturi wet scrubber of the jet-ejector design); and maintain the daily average liquid-to-gas ratio above the limit established during the performance test. |

[67 FR 17773, Apr. 11, 2002, as amended at 70 FR 6942, Feb. 9, 2005]

**Table 3 to Subpart UUU of Part 63—Continous Monitoring Systems for Metal HAP Emissions From Catalytic Cracking Units**

As stated in § 63.1564(b)(1), you shall meet each requirement in the following table that applies to you.

| For each new or existing catalytic cracking unit . . . | If your catalytic cracking unit is . . . | And you use this type of control device for your vent . . . | You shall install, operate, and maintain a . . . |
|---|---|---|---|
| 1. Subject to the NSPS for PM in 40 CFR 60.102 | Any size | Electrostatic precipitator or wet scrubber or no control device | Continuous opacity monitoring system to measure and record the opacity of emissions from each catalyst regenerator vent. |
| 2. Option 1: NSPS limits not subject to the NSPS for PM in 40 CFR 60.102 | Any size | Electrostatic precipitator or wet scrubber or no control device | Continuous opacity monitoring system to measure and record the opacity of emissions from each catalyst regenerator vent. |
| 3. Option 2: PM limit not subject to the NSPS for PM in 40 CFR 60.102 | a. Over 20,000 barrels per day fresh feed capacity | Electrostatic precipitator | Continuous opacity monitoring system to measure and record the opacity of emissions from each catalyst regenerator vent. |
| | b. Up to 20,000 barrels per day fresh feed capacity | Electrostatic precipitator | Continuous opacity monitoring system to measure and record the opacity of emissions from each catalyst regenerator vent; or continuous parameter monitoring systems to measure and record the gas flow rate entering or exiting the control device [1]and the voltage and secondary current (or total power input) to the control device. |
| | c. Any size | i. Wet scrubber | (1) Continuous parameter monitoring system to measure and record the pressure drop across the scrubber, gas flow rate entering or exiting the control device [1], and total liquid (or scrubbing liquor) flow rate to the control device. |
| | | | (2) If you use a wet scrubber of the non-venturi jet-ejector design, you're not required to install and operate a continuous parameter monitoring system for pressure drop. |
| | d. Any size | No electrostatic precipitator or wet scrubber | Continuous opacity monitoring system to measure and record the opacity of emissions from each catalyst regnerator vent. |
| 4. Option 3: Ni lb/hr not subject to the NSPS for PM in 40 CFR 60.102 | a. Over 20,000 barrels per day fresh feed capacity | Electrostatic precipitator | Continuous opacity monitoring system to measure and record the opacity of emissions from each catalyst regenerator vent and continuous parameter monitoring system to measure and record the gas flow rate entering or exiting the control device [1]. |
| | b. Up to 20,000 barrels per day fresh feed capacity | Electrostatic precipitator | Continuous opacity monitoring system to measure and record the opacity of emissions from each catalyst regenerator vent and continuous parameter monitoring system to measure and record the gas flow rate entering or exiting the control device [1]; or continuous parameter monitoring systems to measure and record the gas flow rate entering or exiting the control device [1]and the voltage and secondary current (or total power input) to the control device. |
| | c. Any size | Wet scrubber | (1) Continuous parameter monitoring system to measure and record the pressure drop across the scrubber, gas flow rate entering or exiting the control device [1], and total liquid (or scrubbing liquor) flow rate to the control device. |
| | | | (2) If you use a wet scrubber of the non-venturi jet-ejector design, you're not required to install and operate a continuous parameter monitoring system for pressure drop. |
| | d. Any size | No electrostatic precipitator or wet scrubber | Continuous opacity monitoring system to measure and record the opacity of emissions from each catalyst regenerator vent and continuous parameter monitoring system to measure and record the gas flow rate [1]. |

| For each new or existing catalytic cracking unit . . . | If your catalytic cracking unit is . . . | And you use this type of control device for your vent . . . | You shall install, operate, and maintain a . . . |
|---|---|---|---|
| 5. Option 4: Ni lb/1,000 lbs of coke burn-off not subject to the NSPS for PM in 40 CFR 60.102 | a. Over 20,000 barrels per day fresh feed capacity | Electrostatic precipitator | Continuous opacity monitoring system to measure and record the opacity of emissions from each catalyst regenerator vent and continuous parameter monitoring system to measure and record the gas flow rate entering or exiting the control device [1]. |
| | b. Up to 20,000 barrels per day fresh feed capacity | Electrostatic precipitator | Continuous opacity monitoring system to measure and record the opacity of emissions from each catalyst regenerator vent and continuous parameter monitoring system to measure and record the gas flow rate entering or exiting the control device [1]; or continuous parameter monitoring systems to measure and record the gas flow rate entering or exiting the control device [1]and the voltage and secondary current (or total power input) to the control device. |
| | c. Any size | Wet scrubber | Continuous parameter monitoring system to measure and record the pressure drop across the scrubber, gas flow rate entering or exiting the control device [1], and total liquid (or scrubbing liquor) flow rate to the control device. |
| | d. Any size | No electrostatic precipitator or wet scrubber | Continuous opacity monitoring system to measure and record the opacity of emissions from each catalyst regenerator vent and continuous parameter monitoring system to measure and record the gas flow rate [1]. |

[1] If applicable, you can use the alternative in § 63.1573(a)(1) instead of a continuous parameter monitoring system for gas flow rate.

[70 FR 6942, Feb. 9, 2005]

**Table 4 to Subpart UUU of Part 63—Requirements for Performance Tests for Metal HAP Emissions From Catalytic Cracking Units Not Subject to the New Source Performance Standard (NSPS) for Particulate Matter (PM)**

As stated in § 63.1564(b)(2), you shall meet each requirement in the following table that applies to you.

| For each new or existing catalytic cracking unit catalyst regenerator vent . . . | You must . . . | Using . . . | According to these requirements . . . |
|---|---|---|---|
| 1. If you elect Option 1 in item 2 of Table 1, Option 2 in item 3 of Table 1, Option 3 in item 4 of Table 1, or Option 4 in item 5 of Table 1 of this subpart. | a. Select sampling port's location and the number of traverse ports. | Method 1 or 1A in appendix A to part 60 of this chapter. | Sampling sites must be located at the outlet of the control device or the outlet of the regenerator, as applicable, and prior to any releases to the atmosphere. |
| | b. Determine velocity and volumetric flow rate. | Method 2, 2A, 2C, 2D, 2F, or 2G in appendix A to part 60 of this chapter, as applicable. | |
| | c. Conduct gas molecular weight analysis. | Method 3, 3A, or 3B in appendix A to part 60 of this chapter, as applicable. | |

| For each new or existing catalytic cracking unit catalyst regenerator vent . . . | You must . . . | Using . . . | According to these requirements . . . |
|---|---|---|---|
| | d. Measure moisture content of the stack gas. | Method 4 in appendix A to part 60 of this chapter. | |
| | e. If you use an electro-static precipitator, record the total number of fields in the control system and how many operated during the applicable performance test. | | |
| | f. If you use a wet scrubber, record the total amount (rate) of water (or scrubbing liquid) and the amount (rate) of make-up liquid to the scrubber during each test run. | | |
| 2. Option 1: Elect NSPS | a. Measure PM emissions. | Method 5B or 5F (40 CFR part 60, appendix A) to determine PM emissions and associated moisture content for units without wet scrubbers. Method 5B (40 CFR part 60, appendix A) to determine PM emissions and associated moisture content for unit with wet scrubber. | You must maintain a sampling rate of at least 0.15 dry standard cubic meters per minute (dscm/min) (0.53 dry standard cubic feet per minute (dscf/min). |
| | b. Compute PM emission rate (lbs/1,000 lbs) of coke burn-off. | Equations 1, 2, and 3 of § 63.1564 (if applicable). | |
| | c. Measure opacity of emissions. | Continuous opacity monitoring system. | You must collect opacity monitoring data every 10 seconds during the entire period of the Method 5B or 5F performance test and reduce the data to 6-minute averages. |
| 3. Option 2: PM limit | a. Measure PM emissions. | See item 2. of this table. | See item 2. of this table. |
| | b. Compute coke burn-off rate and PM emission rate. | Equations 1 and 2 of § 63.1564. | |
| | c. Establish your site-specific opacity operating limit if you use a continuous opacity monitoring system. | Data from the continuous opacity monitoring system. | You must collect opacity monitoring data every 10 seconds during the entire period of the Method 5B or 5F performance test and reduce the data to 6-minute averages; determine and record the hourly average opacity from all the 6-minute averages; and compute the site-specific limit using Equation 4 of § 63.1564. |

| For each new or existing catalytic cracking unit catalyst regenerator vent . . . | You must . . . | Using . . . | According to these requirements . . . |
|---|---|---|---|
| 4. Option 3: Ni lb/hr | a. Measure concentration of Ni and total metal HAP. | Method 29 (40 CFR part 60, appendix A). | |
| | b. Compute Ni emission rate (lb/hr). | Equation 5 of § 63.1564. | |
| | c. Determine the equilibrium catalyst Ni concentration. | XRF procedure in appendix A to this subpart[1]; or EPA Method 6010B or 6020 or EPA Method 7520 or 7521 in SW-846[2]; or an alternative to the SW-846 method satisfactory to the Administrator. | You must obtain 1 sample for each of the 3 runs; determine and record the equilibrium catalyst Ni concentration for each of the 3 samples; and you may adjust the laboratory results to the maximum value using Equation 2 of § 63.1571. |
| | d. If you use a continuous opacity monitoring system, establish your site-specific Ni operating limit. | i. Equations 6 and 7 of § 63.1564 using data from continuous opacity monitoring system, gas flow rate, results of equilibrium catalyst Ni concentration analysis, and Ni emission rate from Method 29 test. | (1) You must collect opacity monitoring data every 10 seconds during the entire period of the initial Ni performance test; reduce the data to 6-minute averages; and determine and record the hourly average opacity from all the 6-minute averages. |
| | | | (2) You must collect gas flow rate monitoring data every 15 minutes during the entire period of the initial Ni performance test; measure the gas flow as near as practical to the continuous opacity monitoring system; and determine and record the hourly average actual gas flow rate from all the readings. |
| 5. Option 4: Ni lbs/1,000 lbs of coke burn-off | a. Measure concentration of Ni and total HAP. | Method 29 (40 CFR part 60, appendix A). | |
| | b. Compute Ni emission rate (lb/1,000 lbs of coke burn-off). | Equations 1 and 8 of § 63.1564. | |
| | c. Determine the equilibrium catalyst Ni concentration. | See item 4.c. of this table. | You must obtain 1 sample for each of the 3 runs; determine and record the equilibrium catalyst Ni concentration for each of the 3 samples; and you may adjust the laboratory results to the maximum value using Equation 2 of § 63.1571. |
| | d. If you use a continuous opacity monitoring system, establish your site-specific Ni operating limit. | i. Equations 9 and 10 of § 63.1564 with data from continuous opacity monitoring system, coke burn-off rate, results of equilibrium catalyst Ni concentration analysis, and Ni emission rate from Method 29 test. | (1) You must collect opacity monitoring data every 10 seconds during the entire period of the initial Ni performance test; reduce the data to 6-minute averages; and determine and record the hourly average opacity from all the 6-minute averages. |

| For each new or existing catalytic cracking unit catalyst regenerator vent . . . | You must . . . | Using . . . | According to these requirements . . . |
|---|---|---|---|
| | | | (2) You must collect gas flow rate monitoring data every 15 minutes during the entire period of the initial Ni performance test; measure the gas flow rate as near as practical to the continuous opacity monitoring system; and determine and record the hourly average actual gas flow rate from all the readings. |
| | e. Record the catalyst addition rate for each test and schedule for the 10- day period prior to the test. | | |
| 6. If you elect Option 2 in Entry 3 in Table 1, Option 3 in Entry 4 in Table 1, or Option 4 in Entry 5 in Table 1 of this subpart and you use continuous parameter monitoring systems. | a. Establish each operating limit in Table 2 of this subpart that applies to you. | Data from the continuous parameter monitoring systems and applicable performance test methods. | |
| | b. Electrostatic precipitator or wet scrubber: gas flow rate. | Data from the continuous parameter monitoring systems and applicable performance test methods. | You must collect gas flow rate monitoring data every 15 minutes during the entire period of the initial performance test; and determine and record the maximum hourly average gas flow rate from all the readings. |
| | c. Electrostatic precipitator: voltage and secondary current (or total power input). | Data from the continuous parameter monitoring systems and applicable performance test methods. | You must collect voltage and secondary current (or total power input) monitoring data every 15 minutes during the entire period of the initial performance test; and determine and record the minimum hourly average voltage and secondary current (or total power input) from all the readings. |
| | d. Electrostatic precipitator or wet scrubber: equilibrium catalyst Ni concentration. | Results of analysis for equilibrium catalyst Ni concentration. | You must determine and record the average equilibrium catalyst Ni concentration for the 3 runs based on the laboratory results. You may adjust the value using Equation 1 or 2 of § 63.1571 as applicable. |
| | e. Wet scrubber: pressure drop (not applicable to non-venturi scrubber of jet ejector design). | Data from the continuous parameter monitoring systems and applicable performance test methods. | You must collect pressure drop monitoring data every 15 minutes during the entire period of the initial performance test; and determine and record the minimum hourly average pressure drop from all the readings. |

| For each new or existing catalytic cracking unit catalyst regenerator vent . . . | You must . . . | Using . . . | According to these requirements . . . |
|---|---|---|---|
| | f. Wet scrubber: liquid-to-gas ratio | Data from the continuous parameter monitoring systems and applicable performance test methods. | You must collect gas flow rate and total water (or scrubbing liquid) flow rate monitoring data every 15 minutes during the entire period of the initial performance test; determine and record the hourly average gas flow rate and total water (or scrubbing liquid) flow rate from all the readings; and determine and record the minimum liquid-to-gas ratio. |
| | g. Alternative procedure for gas flow rate. | Data from the continuous parameter monitoring systems and applicable performance test methods. | You must collect air flow rate monitoring data or determine the air flow rate using control room instrumentation every 15 minutes during the entire period of the initial performance test; determine and record the hourly average rate of all the readings; and determine and record the maximum gas flow rate using Equation 1 of § 63.1573. |

[1]Determination of Metal Concentration on Catalyst Particles (Instrumental Analyzer Procedure).

[2] EPA Method 6010B, Inductively Coupled Plasma-Atomic Emission Spectrometry, EPA Method 6020, Inductively Coupled Plasma-Mass Spectrometry, EPA Method 7520, Nickel Atomic Absorption, Direct Aspiration, and EPA Method 7521, Nickel Atomic Absorption, Direct Aspiration are included in “Test Methods for Evaluating Solid Waste, Physical/Chemical Methods,” EPA Publication SW-846, Revision 5 (April 1998). The SW-846 and Updates (document number 955-001-00000-1) are available for purchase from the Superintendent of Documents, U.S. Government Printing Office, Washington, DC 20402, (202) 512-1800; and from the National Technical Information Services (NTIS), 5285 Port Royal Road, Springfield, VA 22161, (703) 487-4650. Copies may be inspected at the EPA Docket Center (Air Docket), EPA West, Room B-108, 1301 Constitution Ave., NW., Washington, DC; or at the Office of the Federal Register, 800 North Capitol Street, NW., Suite 700, Washington, DC.

[67 FR 17773, Apr. 11, 2002, as amended at 70 FR 6942 and 6944, Feb. 9, 2005]

**Table 5 to Subpart UUU of Part 63—Initial Compliance With Metal HAP Emission Limits for Catalytic Cracking Units**

As stated in § 63.1564(b)(5), you shall meet each requirement in the following table that applies to you.

| For each new and existing catalytic cracking unit catalyst regenerator vent . . . | For the following emission limit . . . | You have demonstrated initial compliance if . . . |
|---|---|---|
| 1. Subject to the NSPS for PM in 40 CFR 60.102 | PM emissions must not exceed 1.0 kg/1,000 kg (1.0 lb/1,000 lb) of coke burn-off in the catalyst regenerator; if the discharged gases pass through an incinerator or waste heat boiler in which you burn auxiliary or supplemental liquid or solid fossil fuel, the incremental rate of PM must not exceed 43.0 grams per Gigajoule (g/GJ) or 0.10 pounds per million British thermal units (lb/million Btu) of heat input attributable to the liquid or solid fossil fuel; and the opacity of emissions must not exceed 30 percent, except for one 6-minute average opacity reading in any 1-hour period | You have already conducted a performance test to demonstrate initial compliance with the NSPS and the measured PM emission rate is less than or equal to 1.0 kg/1,000 kg (1.0 lb/1,000 lb) of coke burn-off in the catalyst regenerator. As part of the Notification of Compliance Status, you must certify that your vent meets the PM limit. You are not required to do another performance test to demonstrate initial compliance. If applicable, you have already conducted a performance test to demonstrate initial compliance with the NSPS and the measured PM rate is less than or equal to 43.0 g/GJ (0.10 lb/million Btu) of heat input attributable to the liquid or solid fossil fuel. As part of the Notification of Compliance Status, you must certify that your vent meets the PM emission limit. You are not required to do another performance test to demonstrate initial compliance. You have already conducted a performance test to demonstrate initial compliance with the NSPS and the average hourly opacity is no more than 30 percent. Except: One 6-minute average in any 1-hour period can exceed 30 percent. As part of the Notification of Compliance Status, you must certify that your vent meets the opacity limit. You are not required to do another performance test to demonstrate initial compliance. You have already conducted a performance evaluation to demonstrate initial compliance with the applicable performance specification. As part of your Notification of Compliance Status, you certify that your continuous opacity monitoring system meets the requirements in § 63.1572. You are not required to do a performance evaluation to demonstrate initial compliance. |

| For each new and existing catalytic cracking unit catalyst regenerator vent . . . | For the following emission limit . . . | You have demonstrated initial compliance if . . . |
|---|---|---|
| 2. Option 1: Elect NSPS not subject to the NSPS for PM | PM emission must not exceed 1.0 kg/1,000 kg (1.0 lb/1,000 lb) of coke burn-off in the catalyst regenerator; if the discharged gases pass through an incinerator or waste heat boiler in which you burn auxiliary or supplemental liquid or solid fossil fuel, the incremental rate of PM must not exceed 43.0 g/GJ (0.10 lb/million Btu) of heat input attributable to the liquid or solid fossil fuel; and the opacity of emissions must not exceed 30 percent, except for one 6-minute average opacity reading in any 1-hour period | The average PM emission rate, measured using EPA Method 5B or 5F (for a unit without a wet scrubber) or 5B (for a unit with a wet scrubber), over the period of the initial performance test, is no higher than 1.0 kg/1,000 kg (1.0 lb/1,000 lb of coke burn-off in the catalyst regenerator. The PM emission rate is calculated using Equations 1 and 2 of § 63.1564. If applicable, the average PM emission rate, measured using EPA Method 5B emission rate, measured using EPA Method 5B or 5F (for a unit without a wet scrubber) or Method 5B (for a unit with a wet scrubber) over the period of the initial performance test, is no higher than 43.0 g/GJ (0.10 lb/million Btu) of heat input attributable to the liquid or solid fossil fuel. The PM emission rate is calculated using Equation 3 of § 63.1564; no more than one 6-minute average measured by the continuous opacity monitoring system exceeds 30 percent opacity in any 1-hour period over the period of the performance test; and your performance evaluation shows the continuous opacity monitoring system meets the applicable requirements in § 63.1572. |
| 3. Option 2: Not subject to the NSPS for PM | PM emissions must not exceed 1.0 kg/1,000 kg (1.0 lb/1,000 lb) of coke burn-off in the catalyst regenerator | The average PM emission rate, measured using EPA Method 5B or 5F (for a unit without a wet scrubber) or Method 5B (for a unit with a wet scrubber), over the period of the initial performance test, is less than or equal to 1.0 kg/1,000 kg (1.0 lb/1,000 lb) of coke burn-off in the catalyst regenerator. The PM emission rate is calculated using Equations 1 and 2 of § 63.1564; and if you use a continuous opacity monitoring system, your performance evaluation shows the system meets the applicable requirements in § 63.1572. |
| 4. Option 3: not subject to the NSPS for PM | Nickel (Ni) emissions from your catalyst regenerator vent must not exceed 13,000 mg/hr (0.029 lb/hr). | The average Ni emission rate, measured using Method 29 over the period of the initial performance test, is not more than 13,000 mg/hr (0.029 lb/hr). The Ni emission rate is calculated using Equation 5 of § 63.1564; and if you use a continuous opacity monitoring system, your performance evaluation shows the system meets the applicable requirements in § 63.1572. |
| 5. Option 4: Ni lb/1,000 lbs of coke burn-off not subject to the NSPS for PM. | Ni emissions from your catalyst regenerator vent must not exceed 1.0 mg/kg (0.001 lb/1,000 lbs) of coke burn-off in the catalyst regenerator. | The average Ni emission rate, measured using Method 29 over the period of the initial performance test, is not more than 1.0 mg/kg (0.001 lb/1,000 lbs) of coke burn-off in the catalyst regenerator. The Ni emission rate is calculated using Equation 8 of § 63.1564; and if you use a continuous opacity monitoring system, your performance evaluation shows the system meets the applicable requirements in § 63.1572. |

[67 FR 17773, Apr. 11, 2002, as amended at 70 FR 6942 and 6946, Feb. 9, 2005]

**Table 6 to Subpart UUU of Part 63—Continuous Compliance With Metal HAP Emission Limits for Catalytic Cracking Units**

As stated in § 63.1564(c)(1), you shall meet each requirement in the following table that applies to you.

| For each new and existing catalytic cracking unit . . . | Subject to this emission limit for your catalyst regenerator vent . . . | You shall demonstrate continuous compliance by . . . |
|---|---|---|
| 1. Subject to the NSPS for PM in 40 CFR 60.102 | a. PM emissions must not exceed 1.0 kg/1,000 kg (1.0 lb/1,000 lb) of coke burn-off in the catalyst regenerator; if the discharged gases pass through an incinerator or waste heat boiler in which you burn auxiliary or supplemental liquid or solid fossil fuel, the incremental rate of PM must not exceed 43.0 g/GJ (0.10 lb/million Btu) of heat input attributable to the liquid or solid fossil fuel; and the opacity of emissions must not exceed 30 percent, except for one 6-minute average opacity reading in any 1-hour period | i. Determining and recording each day the average coke burn-off rate (thousands of kilograms per hour) using Equation 1 in § 63.1564 and the hours of operation for each catalyst regenerator; maintaining PM emission rate below 1.0 kg/1,000 kg (1.0 lb/1,000 lbs) of coke burn-off; if applicable, determining and recording each day the rate of combustion of liquid or solid fossil fuels (liters/hour or kilograms/hour) and the hours of operation during which liquid or solid fossil-fuels are combusted in the incinerator-waste heat boiler; if applicable, maintaining the PM rate incinerator below 43 g/GJ (0.10 lb/million Btu) of heat input attributable to the solid or liquid fossil fuel; collecting the continuous opacity monitoring data for each catalyst regenerator vent according to § 63.1572; and maintaining each 6-minute average at or below 30 percent except that one 6-minute average during a 1-hour period can exceed 30 percent. |
| 2. Option 1: Elect NSPS not subject to the NSPS for PM in 40 CFR 60.102 | See item 1.a. of this table | See item 1.a.i. of this table. |
| 3. Option 2: PM limit not subject to the NSPS for PM | PM emissions must not exceed 1.0 kg/1,000 kg (1.0 lb/1,000 lb) of coke burn-off in the catalyst regenerator | Determining and recording each day the average coke burn-off rate (thousands of kilograms per hour) and the hours of operation for each catalyst regenerator by Equation 1 of § 63.1564 (you can use process data to determine the volumetric flow rate); and maintaining the PM emission rate below 1.0 kg/1,000 kg (1.0 lb/1,000 lb) of coke burn-off. |
| 4. Option 3: Ni lb/hr not subject to the NSPS for PM. | Ni emissions must not exceed 13,000 mg/hr (0.029 lb/hr). | Maintaining Ni emission rate below 13,000 mg/hr (0.029 lb/hr). |
| 5. Option 4: Ni lb/1,000 lbs of coke burn-off not subject to the NSPS for PM | Ni emissions must not exceed 1.0 mg/kg (0.001 lb/1,000 lbs) of coke burn-off in the catalyst regenerator | Determining and recording each day the average coke burn-off rate (thousands of kilograms per hour) and the hours of operation for each catalyst regenerator by Equation 1 of § 63.1564 (you can use process data to determine the volumetric flow rate); and maintaining Ni emission rate below 1.0 mg/kg (0.001 lb/1,000 lbs) of coke burn-off in the catalyst regenerator. |

[67 FR 17773, Apr. 11, 2002, as amended at 70 FR 6942 and 6948, Feb. 9, 2005]

**Table 7 to Subpart UUU of Part 63—Continuous Compliance With Operating Limits for Metal HAP Emissions From Catalytic Cracking Units**

As stated in § 63.1564(c)(1), you shall meet each requirement in the following table that applies to you.

| For each new or existing catalytic cracking unit . . . | If you use . . . | For this operating limit . . . | You shall demonstrate continuous compliance by . . . |
|---|---|---|---|
| 1. Subject to NSPS for PM in 40 CFR 60.102. | Continuous opacity monitoring system. | Not applicable. | Complying with Table 6 of this subpart. |
| 2. Option 1: Elect NSPS not subject to the NSPS for PM in 40 CFR 60.102. | Continuous opacity monitoring system. | Not applicable. | Complying with Table 6 of this subpart. |
| 3. Option 2: PM limit not subject to the NSPS for PM in 40 CFR 60.102. | a. Continuous opacity monitoring system. | The opacity of emissions from your catalyst regenerator vent must not exceed the site-specific opacity operating limit established during the performance test. | Collecting the hourly average continuous opacity monitoring system data according to § 63.1572; and maintaining the hourly average opacity at or below the site-specific limit. |
| | b. Continuous parameter monitoring systems—electrostatic precipitator. | i. The daily average gas flow rate entering or exiting the control device must not exceed the operating limit established during the performance test. | Collecting the hourly and daily average gas flow rate monitoring data according to § 63.1572 [1]; and maintaining the daily average gas flow rate at or below the limit established during the performance test. |
| | | ii. The daily average voltage and secondary current (or total power input) to the control device must not fall below the operating limit established during the performance test. | Collecting the hourly and daily average voltage and secondary current (or total power input) monitoring data according to § 63.1572; and maintaining the daily average voltage and secondary current (or total power input) at or above the limit established during the performance test. |
| | c. Continuous parameter monitoring systems—wet scrubber. | i. The daily average pressure drop across the scrubber must not fall below the operating limit established during the performance test. | Collecting the hourly and daily average pressure drop monitoring data according to § 63.1572; and maintaining the daily average pressure drop above the limit established during the performance test. |
| | | ii. The daily average liquid-to-gas ratio must not fall below the operating limit established during the performance test. | Collecting the hourly average gas flow rate and water (or scrubbing liquid) flow rate monitoring data according to § 63.1572 [1]; determining and recording the hourly average liquid-to-gas ratio; determining and recording the daily average liquid-to-gas ratio; and maintaining the daily average liquid-to-gas ratio above the limit established during the performance test. |
| 4. Option 3: Ni lb/hr not subject to the NSPS for PM in 40 CFR | a. Continuous opacity monitoring system. | The daily average Ni operating value must not exceed the site-specific Ni operating limit established | Collecting the hourly average continuous opacity monitoring system data according to § 63.1572; determining and recording equilibrium catalyst Ni concentration at least once a week [2]; collecting |

| For each new or existing catalytic cracking unit . . . | If you use . . . | For this operating limit . . . | You shall demonstrate continuous compliance by . . . |
|---|---|---|---|
| 60.102. | | during the performance test. | the hourly average gas flow rate monitoring data according to § 63.1572 [1]; determining and recording the hourly average Ni operating value using Equation 11 of § 63.1564; determining and recording the daily average Ni operating value; and maintaining the daily average Ni operating value below the site-specific Ni operating limit established during the performance test. |
| | b. Continuous parameter monitoring systems—electrostatic precipitator. | i. The daily average gas flow rate entering or exiting the control device must not exceed the operating limit established during the performance test. | See item 3.b.i. of this table. |
| | | ii. The daily average voltage and secondary current (or total power input) must not fall below the level established in the performance test. | See item 3.b.ii. of this table. |
| | | iii. The monthly rolling average of the equilibrium catalyst Ni concentration must not exceed the level established during the performance test. | Determining and recording the equilibrium catalyst Ni concentration at least once a week [2]; determining and recording the monthly rolling average of the equilibrium catalyst Ni concentration once each week using the weekly or most recent value; and maintaining the monthly rolling average below the limit established in the performance test. |
| | c. Continuous parameter monitoring systems—wetscrubber. | i. The daily average pressure drop must not fall below the operating limit established in the performance test. | See item 3.c.i. of this table. |
| | | ii. The daily average liquid-to-gas ratio must not fall below the operating limit established during the performance test. | See item 3.c.ii. of this table. |
| | | iii. The monthly rolling average equilibrium catalyst Ni concentration must not exceed the level established during the performance test. | Determining and recording the equilibrium catalyst Ni concentration at least once a week[2]; determining and recording the monthly rolling average of equilibrium catalyst Ni concentration once each week using the weekly or most recent value; and maintaining the monthly rolling average below the limit established in the performance test. |
| 5. Option 4: Ni lb/ton of coke burn-off not subject to the NSPS for PM in 40 CFR 60.102. | a. Continuous opacity monitoring system. | The daily average Ni operating value must not exceed the site-specific Ni operating limit established during the performance test. | Collecting the hourly average continuous opacity monitoring system data according to § 63.1572; collecting the hourly average gas flow rate monitoring data according to § 63.1572 [1]; determining and recording equilibrium catalyst Ni concentration at least once a week [2]; determining and recording the hourly average Ni operating value using Equation 12 of § 63.1564; determining |

| For each new or existing catalytic cracking unit . . . | If you use . . . | For this operating limit . . . | You shall demonstrate continuous compliance by . . . |
|---|---|---|---|
| | | | and recording the daily average Ni operating value; and maintaining the daily average Ni operating value below the site-specific Ni operating limit established during the performance test. |
| | b. Continuous parameter monitoring systems—electrostatic precipitator. | i. The daily average gas flow rate to the control device must not exceed the level established in the performance test. | See item 3.b.i. of this table. |
| | | ii. The daily average voltage and secondary current (or total power input) must not fall below the level established in the performance test. | See item 3.b.ii. of this table. |
| | | iii. The monthly rolling average equilibrium catalyst Ni concentration must not exceed the level established during the performance test. | See item 4.b.iii. of this table. |
| | c. Continuous parameter monitoring systems—wet scrubber. | i. The daily average pressure drop must not fall below the operating limit established in the performance test. | See item 3.c.i. of this table. |
| | | ii. The daily average liquid-to-gas ratio must not fall below the operating limit established during the performance test. | See item 3.c.ii. of this table. |
| | | iii. The monthly rolling average equilibrium catalyst Ni concentration must not exceed the level established during the performance test. | See item 4.c.iii. of this table. |

[1] If applicable, you can use the alternative in § 63.1573(a)(1) for gas flow rate instead of a continuous parameter monitoring system if you used the alternative method in the initial performance test.

[2] The equilibrium catalyst Ni concentration must be measured by the procedure, Determination of Metal Concentration on Catalyst Particles (Instrumental Analyzer Procedure) in appendix A to this subpart; or by EPA Method 6010B, Inductively Coupled Plasma-Atomic Emission Spectrometry, EPA Method 6020, Inductively Coupled Plasma-Mass Spectrometry, EPA Method 7520, Nickel Atomic Absorption, Direct Aspiration, or EPA Method 7521, Nickel Atomic Absorption, Direct Aspiration; or by an alternative to EPA Method 6010B, 6020, 7520, or 7521 satisfactory to the Administrator. The EPA Methods 6010B, 6020, 7520, and 7521 are included in “Test Methods for Evaluating Solid Waste, Physical/Chemical Methods,” EPA Publication SW-846, Revision 5 (April 1998). The SW-846 and Updates (document number 955-001-00000-1) are available for purchase from the Superintendent of Documents, U.S. Government Printing Office, Washington, DC 20402, (202) 512-1800; and from the National Technical Information Services (NTIS), 5285 Port Royal Road, Springfield, VA 22161, (703) 487-4650. Copies may be inspected at the EPA Docket Center (Air Docket), EPA West, Room B-108, 1301 Constitution Ave., NW.,

Washington, DC; or at the Office of the Federal Register, 800 North Capitol Street, NW., Suite 700, Washington, DC. These methods are also available at*http://www.epa.gov/epaoswer/hazwaste/test/main.htm.*

[70 FR 6948, Feb. 9, 2005]

**Table 8 to Subpart UUU of Part 63—Organic HAP Emission Limits for Catalytic Cracking Units**

As stated in § 63.1565(a)(1), you shall meet each emission limitation in the following table that applies to you.

| For each new and existing catalytic cracking unit . . . | You shall meet the following emission limit for each catalyst regenerator vent . . . |
|---|---|
| 1. Subject to the NSPS for carbon monoxide (CO) in 40 CFR 60.103 | CO emissions from the catalyst regenerator vent or CO boiler serving the catalytic cracking unit must not exceed 500 parts per million volume (ppmv) (dry basis). |
| 2. Not subject to the NSPS for CO in 40 CFR 60.103 | a. CO emissions from the catalyst regenerator vent or CO boiler serving the catalytic cracking unit must not exceed 500 ppmv (dry basis).<br>b. If you use a flare to meet the CO limit, the flare must meet the requirements for control devices in § 63.11(b): visible emissions must not exceed a total of 5 minutes during any 2 consecutive hours. |

[67 FR 17773, Apr. 11, 2002, as amended at 70 FR 6942 and 6948, Feb. 9, 2005]

**Table 9 to Subpart UUU of Part 63—Operating Limits for Organic HAP Emissions From Catalytic Cracking Units**

As stated in § 63.1565(a)(2), you shall meet each operating limit in the following table that applies to you.

| For each new or existing catalytic cracking unit . . . | For this type of continuous monitoring system . . . | For this type of control device . . . | You shall meet this operating limit . . . |
|---|---|---|---|
| 1. Subject to the NSPS for carbon monoxide (CO) in 40 CFR 60.103 | Continuous emission monitoring system. | Not applicable | Not applicable. |
| 2. Not subject to the NSPS for CO in 40 CFR 60.103 | a. Continuous emission monitoring system. | Not applicable | Not applicable. |
| | b. Continuous parameter monitoring systems. | i. Thermal incinerator | Maintain the daily average combustion zone temperature above the limit established during the performance test; and maintain the daily average oxygen concentration in the vent stream (percent, dry basis) above the limit established during the performance test. |
| | | ii. Boiler or process heater with a design heat input capacity under 44 MW or a boiler or process heater in which all vent streams are not introduced into the flame zone. | Maintain the daily average combustion zone temperature above the limit established in the performance test. |
| | | iii. Flare | The flare pilot light must be present at all times and the flare must be operating at all times that emissions may be vented to it. |

[67 FR 17773, Apr. 11, 2002, as amended at 70 FR 6942 and 6948, Feb. 9, 2005]

**Table 10 to Subpart UUU of Part 63—Continuous Monitoring Systems for Organic HAP Emissions From Catalytic Cracking Units**

As stated in § 63.1565(b)(1), you shall meet each requirement in the following table that applies to you.

| For each new or existing catalytic cracking unit . . . | And you use this type of control device for your vent . . . | You shall install, operate, and maintain this type of continuous monitoring system . . . |
|---|---|---|
| 1. Subject to the NSPS for carbon monoxide (CO) in 40 CFR 60.103. | Not applicable | Continuous emission monitoring system to measure and record the concentration by volume (dry basis) of CO emissions from each catalyst regenerator vent. |
| 2. Not subject to the NSPS for CO in 40 CFR 60.103 | a. Thermal incinerator | Continuous emission monitoring system to measure and record the concentration by volume (dry basis) of CO emissions from each catalyst regenerator vent; or continuous parameter monitoring systems to measure and record the combustion zone temperature and oxygen content (percent, dry basis) in the incinerator vent stream. |
| | b. Process heater or boiler with a design heat input capacity under 44 MW or process heater or boiler in which all vent streams are not introduced into the flame zone. | Continuous emission monitoring system to measure and record the concentration by volume (dry basis) of CO emissions from each catalyst regenerator vent; or continuous parameter monitoring systems to measure and record the combustion zone temperature. |
| | c. Flare | Monitoring device such as a thermocouple, an ultraviolet beam sensor, or infrared sensor to continuously detect the presence of a pilot flame. |
| | d. No control device | Continuous emission monitoring system to measure and record the concentration by volume (dry basis) of CO emissions from each catalyst regenerator vent. |

[67 FR 17773, Apr. 11, 2002, as amended at 70 FR 6942 and 6948, Feb. 9, 2005]

**Table 11 to Subpart UUU of Part 63—Requirements for Performance Tests for Organic HAP Emissions From Catalytic Cracking Units Not Subject to New Source Performance Standard (NSPS) for Carbon Monoxide (CO)**

As stated in § 63.1565(b)(2) and (3), you shall meet each requirement in the following table that applies to you.

| For . . . | You must . . . | Using . . . | According to these requirements . . . |
|---|---|---|---|
| 1. Each new or existing catalytic cracking unit catalyst regenerator vent. | a. Select sampling port's location and the number of traverse ports. | Method 1 or 1A in appendix A to part 60 of this chapter. | Sampling sites must be located at the outlet of the control device or the outlet of the regenerator, as applicable, and prior to any releases to the atmosphere. |
| | b. Determine velocity and volumetric flow rate. | Method 2, 2A, 2D, 2F, or 2G in appendix A to part 60 of this chapter, as applicable. | |
| | c. Conduct gas molecular weight analysis. | Method 3, 3A, or 3B in appendix A to part 60 of this chapter, as applicable. | |

| For . . . | You must . . . | Using . . . | According to these requirements . . . |
|---|---|---|---|
| | d. Measure moisture content of the stack gas. | Method 4 in appendix A to part 60 of this chapter. | |
| 2. For each new or existing catalytic cracking unit catalyst regenerator vent if you use a continuous emission monitoring system. | Measure CO emissions | Data from your continuous emission monitoring system. | Collect CO monitoring data for each vent for 24 consecutive operating hours; and reduce the continuous emission monitoring data to 1-hour averages computed from four or more data points equally spaced over each 1-hour period. |
| 3. Each catalytic cracking unit catalyst regenerator vent if you use continuous parameter monitoring systems. | a. Measure the CO concentration (dry basis) of emissions exiting the control device. | Method 10, 10A, or 10B in appendix A to part 60 of this chapter, as applicable. | |
| | b. Establish each operating limit in Table 9 of this subpart that applies to you. | Data from the continuous parameter monitoring systems. | |
| | c. Thermal incinerator combustion zone temperature. | Data from the continuous parameter monitoring systems. | Collect temperature monitoring data every 15 minutes during the entire period of the CO initial performance test; and determine and record the minimum hourly average combustion zone temperature from all the readings. |
| | d. Thermal incinerator: oxygen, content (percent, dry basis) in the incinerator vent stream. | Data from the continuous parameter monitoring systems. | Collect oxygen concentration (percent, dry basis) monitoring data every 15 minutes during the entire period of the CO initial performance test; and determine and record the minimum hourly average percent excess oxygen concentration from all the readings. |
| | e. If you use a process heater or boiler with a design heat input capacity under 44 MW or process heater or boiler in which all vent streams are not introduced into the flame zone, establish operating limit for combustion zone temperature. | Data from the continuous parameter monitoring systems. | Collect the temperature monitoring data every 15 minutes during the entire period of the CO initial performance test; and determine and record the minimum hourly average combustion zone temperature from all the readings. |
| | f. If you use a flare, conduct visible emission observations. | Method 22 (40 CFR part 60, appendix A). | Maintain a 2-hour observation period; and record the presence of a flame at the pilot light over the full period of the test. |
| | g. If you use a flare, determine that the flare meets the requirements for net heating value of the gas being combusted and exit velocity. | 40 CFR 60.11(b)(6)through(8). | |

[67 FR 17773, Apr. 11, 2002, as amended at 70 FR 6942 and 6948, Feb. 9, 2005]

**Table 12 to Subpart UUU of Part 63—Initial Compliance With Organic HAP Emission Limits for Catalytic Cracking Units**

As stated in § 63.1565(b)(4), you shall meet each requirement in the following table that applies to you.

| For each new and existing catalytic cracking unit . . . | For the following emission limit . . . | You have demonstrated initial compliance if . . . |
|---|---|---|
| 1. Subject to the NSPS for carbon monoxide (CO) in 40 CFR 60.103 | CO emissions from your catalyst regenerator vent or CO boiler serving the catalytic cracking unit must not exceed 500 ppmv (dry basis). | You have already conducted a performance test to demonstrate initial compliance with the NSPS and the measured CO emissions are less than or equal to 500 ppm (dry basis). As part of the Notification of Compliance Status, you must certify that your vent meets the CO limit. You are not required to conduct another performance test to demonstrate initial compliance. You have already conducted a performance evaluation to demonstrate initial compliance with the applicable performance specification. As part of your Notification of Compliance Status, you must certify that your continuous emission monitoring system meets the applicable requirements in § 63.1572. You are not required to conduct another performance evaluation to demonstrate initial compliance. |
| 2. Not subject to the NSPS for CO in 40 CFR 60.103 | a. CO emissions from your catalyst regenerator vent or CO boiler serving the catalytic cracking unit must not exceed 500 ppmv (dry basis). | i. If you use a continuous parameter monitoring system, the average CO emissions measured by Method 10 over the period of the initial performance test are less than or equal to 500 ppmv (dry basis). |
| | | ii. If you use a continuous emission monitoring system, the hourly average CO emissions over the 24-hour period for the initial performance test are not more than 500 ppmv (dry basis); and your performance evaluation shows your continuous emission monitoring system meets the applicable requirements in § 63.1572. |
| | b. If you use a flare, visible emissions must not exceed a total of 5 minutes during any 2 operating hours. | Visible emissions, measured by Method 22 during the 2-hour observation period during the initial performance test, are no higher than 5 minutes. |

[67 FR 17773, Apr. 11, 2002, as amended at 70 FR 6942 and 6948, Feb. 9, 2005]

**Table 13 to Subpart UUU of Part 63—Continuous Compliance With Organic HAP Emission Limits for Catalytic Cracking Units**

As stated in § 63.1565(c)(1), you shall meet each requirement in the following table that applies to you.

| For each new and existing catalytic cracking unit . . . | Subject to this emission limit for your catalyst regenerator vent . . . | If you must . . . | You shall demonstrate continuous compliance by . . . |
|---|---|---|---|
| 1. Subject to the NSPS for carbon monoxide (CO) in 40 CFR 60.103 | CO emissions from your catalyst regenerator vent or CO boiler serving the catalytic cracking unit must not exceed 500 ppmv (dry basis). | Continuous emission monitoring system | Collecting the hourly average CO monitoring data according to § 63.1572; and maintaining the hourly average CO concentration at or below 500 ppmv (dry basis). |

| For each new and existing catalytic cracking unit . . . | Subject to this emission limit for your catalyst regenerator vent . . . | If you must . . . | You shall demonstrate continuous compliance by . . . |
|---|---|---|---|
| 2. Not subject to the NSPS for CO in 40 CFR 60.103 | i. CO emissions from your catalyst regenerator vent or CO boiler serving the catalytic cracking unit must not exceed 500 ppmv (dry basis). | Continuous emission monitoring system. | Same as above. |
| | ii. CO emissisons from your catalyst regenerator vent or CO boiler serving the catalytic cracking unit must not exceed 500 ppmv (dry basis). | Continuous parameter monitoring system. | Maintaining the hourly average CO concentration below 500 ppmv (dry basis). |
| | iii. Visible emissions from a flare must not exceed a total of 5 minutes during any 2-hour period. | Control device-flare | Maintaining visible emissions below a total of 5 minutes during any 2-hour operating period. |

[67 FR 17773, Apr. 11, 2002, as amended at 70 FR 6942 and 6948, Feb. 9, 2005]

**Table 14 to Subpart UUU of Part 63—Continuous Compliance With Operating Limits for Organic HAP Emissions From Catalytic Cracking Units**

As stated in § 63.1565(c)(1), you shall meet each requirement in the following table that applies to you.

| For each new existing catalytic cracking unit . . . | If you use . . . | For this operating limit . . . | You shall demonstrate continuous compliance by . . . |
|---|---|---|---|
| 1. Subject to NSPS for carbon monoxide (CO) in 40 CFR 60.103 | Continuous emission monitoring system. | Not applicable | Complying with Table 13 of this subpart. |
| 2. Not subject to the NSPS for CO in 40 CFR 60.103 | a. Continuous emission monitoring system | Not applicable | Complying with Table 13 of this subpart. |
| | b. Continuous parameter monitoring systems—thermal incinerator. | i. The daily average combustion zone temperature must not fall below the level established during the performance test. | Collecting the hourly and daily average temperature monitoring data according to § 63.1572; and maintaining the daily average combustion zone temperature above the limit established during the performance test. |
| | | ii. The daily average oxygen concentration in the vent stream (percent, dry basis) must not fall below the level established during the performance test. | Collecting the hourly and daily average oxygen concentration monitoring data according to § 63.1572; and maintaining the daily average oxygen concentration above the limit established during the performance test. |

| For each new existing catalytic cracking unit . . . | If you use . . . | For this operating limit . . . | You shall demonstrate continuous compliance by . . . |
|---|---|---|---|
| | c. Continuous parameter monitoring systems—boiler or process heater with a design heat input capacity under 44 MW or boiler or process heater in which all vent streams are not introduced into the flame zone. | The daily combustion zone temperature must not fall below the level established in the performance test. | Collecting the average hourly and daily temperature monitoring data according to § 63.1572; and maintaining the daily average combustion zone temperature above the limit established during the performance test. |
| | d. Continuous parameter monitoring system—flare. | The flare pilot light must be present at all times and the flare must be operating at all times that emissions may be vented to it. | Collecting the flare monitoring data according to § 63.1572; and recording for each 1-hour period whether the monitor was continuously operating and the pilot light was continuously present during each 1-hour period. |

[67 FR 17773, Apr. 11, 2002, as amended at 70 FR 6942 and 6948, Feb. 9, 2005]

**Table 15 to Subpart UUU of Part 63—Organic HAP Emission Limits for Catalytic Reforming Units**

As stated in § 63.1566(a)(1), you shall meet each emission limitation in the following table that applies to you.

| For each applicable process vent for a new or existing catalytic reforming unit . . . | You shall meet this emission limit during initial catalyst depressuring and catalyst purging operations . . . |
|---|---|
| 1. Option 1 | Vent emissions to a flare that meets the requirements for control devices in § 63.11(b). Visible emissions from a flare must not exceed a total of 5 minutes during any 2-hour operating period. |
| 2. Option 2 | Reduce uncontrolled emissions of total organic compounds (TOC) or nonmethane TOC from your process vent by 98 percent by weight using a control device or to a concentration of 20 ppmv (dry basis as hexane), corrected to 3 percent oxygen, whichever is less stringent. If you vent emissions to a boiler or process heater to comply with the percent reduction or concentration emission limitation, the vent stream must be introduced into the flame zone, or any other location that will achieve the percent reduction or concentration standard. |

[67 FR 17773, Apr. 11, 2002, as amended at 70 FR 6942 and 6951, Feb. 9, 2005]

**Table 16 to Subpart UUU of Part 63—Operating Limits for Organic HAP Emissions From Catalytic Reforming Units**

As stated in § 63.1566(a)(2), you shall meet each operating limit in the following table that applies to you.

| For each new or existing catalytic reforming unit . . . | For this type of control device . . . | You shall meet this operating limit during initial catalyst depressuring and purging operations. . . |
|---|---|---|
| 1. Option 1: vent to flare | Flare that meets the requirements for control devices in § 63.11(b) | The flare pilot light must be present at all times and the flare must be operating at all times that emissions may be vented to it. |

| For each new or existing catalytic reforming unit . . . | For this type of control device . . . | You shall meet this operating limit during initial catalyst depressuring and purging operations. . . |
|---|---|---|
| 2. Option 2: Percent reduction or concentration limit | a. Thermal incinerator, boiler or process heater with a design heat input capacity under 44 MW, or boiler or process heater in which all vent streams are not introduced into the flame zone | The daily average combustion zone temperature must not fall below the limit established during the performance test. |
| | b. No control device | Operate at all times according to your operation, maintenance, and monitoring plan regarding minimum catalyst purging conditions that must be met prior to allowing uncontrolled purge releases. |

[67 FR 17773, Apr. 11, 2002, as amended at 70 FR 6942 and 6951, Feb. 9, 2005]

**Table 17 to Subpart UUU of Part 63—Continuous Monitoring Systems for Organic HAP Emissions From Catalytic Reforming Units**

As stated in § 63.1566(b)(1), you shall meet each requirement in the following table that applies to you.

| For each applicable process vent for a new or existing catalytic reforming unit . . . | If you use this type of control device . . . | You shall install and operate this type of continuous monitoring system . . . |
|---|---|---|
| 1. Option 1: vent to a flare | Flare that meets the requirements for control devices in § 63.11(b) | Monitoring device such as a thermocouple, an ultraviolet beam sensor, or infrared sensor to continuously detect the presence of a pilot flame. |
| 2. Option 2: percent reduction or concentration limit. | Thermal incinerator, process heater or boiler with a design heat input capacity under 44 MW, or process heater or boiler in which all vent streams are not introduced into the flame zone | Continuous parameter monitoring systems to measure and record the combustion zone temperature. |

[67 FR 17773, Apr. 11, 2002, as amended at 70 FR 6942 and 6952, Feb. 9, 2005]

**Table 18 to Subpart UUU of Part 63—Requirements for Performance Tests for Organic HAP Emissions From Catalytic Reforming Units**

As stated in § 63.1566(b)(2) and (3), you shall meet each requirement in the following table that applies to you.

| For each new or exiting catalytic reforming unit . . . | You must . . . | Using . . . | According to these requirements . . . |
|---|---|---|---|
| 1. Option 1: Vent to a flare | a. Conduct visible emission observations | Method 22 (40 CFR part 60, appendix A) | 2-hour observation period. Record the presence of a flame at the pilot light over the full period of the test. |

| For each new or exiting catalytic reforming unit . . . | You must . . . | Using . . . | According to these requirements . . . |
|---|---|---|---|
| | b. Determine that the flare meets the requirements for net heating value of the gas being combusted and exit velocity | Not applicable. | 40 CFR 63.11(b)(6) through (8). |
| 2. Option 2: Percent reduction or concentration limit | a. Select sampling site | Method 1 or 1A (40 CFR part 60, appendix A). No traverse site selection method is needed for vents smaller than 0.10 meter in diameter. | Sampling sites must be located at the inlet (if you elect the emission reduction standard) and outlet of the control device and prior to any releases to the atmosphere. |
| | b. Measure gas volumetric flow rate | Method 2, 2A, 2C, 2D, 2F, or 2G (40 CFR part 60, appendix A), as applicable | |
| | c. Measure TOC concentration (for percent reduction standard) | Method 25 (40 part 60, appendix A) to measure nonmethane TOC concentration (in carbon equivalents) at inlet and outlet of the control device. If the nonmethane TOC outlet concentration is expected to be less than 50 ppm (as carbon), you can use Method 25A to measure TOC concentration (as hexane) at the inlet and the outlet of the control device. If you use Method 25A, you may use Method 18 (40 CFR part 60, appendix A) to measure the methane concentration to determine the nonmethane TOC concentration | Take either an integrated sample or four grab samples during each run. If you use a grab sampling technique, take the samples at approximately equal intervals in time, such as 15-minute intervals during the run. |
| | d. Calculate TOC or nonmethane TOC emission rate and mass emission reduction | | Calculate emission rate by Equation 1 of § 63.1566 (if you use Method 25) or Equation 2 of § 63.1566 (if you use Method 25A). Calculate mass emission reduction by Equation 3 of § 63.1566. |
| | e. For concentration standard, measure TOC concentration. (Optional: Measure methane concentration.) | Method 25A (40 CFR part 60, appendix A) to measure TOC concentration (as hexane) at the outlet of the control device. You may elect to use Method 18 (40 CFR part 60, appendix A) to measure the methane concentration | |
| | f. Determine oxygen content in the gas stream at the outlet of the control device | Method 3A or 3B (40 CFR part 60, appendix A), as applicable | |
| | g. Calculate the TOC or nonmethane TOC concentration corrected for oxygen content (for concentration standard) | Equation 4 of § 63.1566 | |

| For each new or exiting catalytic reforming unit . . . | You must . . . | Using . . . | According to these requirements . . . |
|---|---|---|---|
| | h. Establish each operating limit in Table 16 of this subpart that applies to you for a thermal incinerator, or process heater or boiler with a design heat input capacity under 44 MW, or process heater or boiler in which all vent streams are not introduced into flame zone | Data from the continuous parameter monitoring systems | Collect the temperature monitoring data every 15 minutes during the entire period of the initial TOC performance test. Determine and record the minimum hourly average combustion zone temperature. |
| | i. If you do not use a control device, document the purging conditions used prior to testing following the minimum requirements in the operation, maintenance, and monitoring plan. | Data from monitoring systems as identified in the operation, maintenance, and monitoring plan | Procedures in the operation, maintenance, and monitoring plan. |

[67 FR 17773, Apr. 11, 2002, as amended at 70 FR 6942 and 6952, Feb. 9, 2005]

**Table 19 to Subpart UUU of Part 63—Initial Compliance With Organic HAP Emission Limits for Catalytic Reforming Units**

As stated in § 63.1566(b)(7), you shall meet each requirement in the following table that applies to you.

| For each applicable process vent for a new or existing catalytic reforming unit . . . | For the following emission limit . . . | You have demonstrated initial compliance if . . . |
|---|---|---|
| Option 1 | Visible emissions from a flare must not exceed a total of 5 minutes during any 2 consecutive hours | Visible emissions, measured using Method 22 over the 2-hour observation period of the performance test, do not exceed a total of 5 minutes. |
| Option 2 | Reduce uncontrolled emissions of total organic compounds (TOC) or nonmethane TOC from your process vent by 98 percent by weight using a control device or to a concentration of 20 ppmv (dry basis as hexane), corrected to 3 percent oxygen, whichever is less stringent | The mass emission reduction of nonmethane TOC measured by Method 25 over the period of the performance test is at least 98 percent by weight as calculated using Equations 1 and 3 of § 63.1566; or the mass emission reduction of TOC measured by Method 25A (or nonmethane TOC measured by Methods 25A and 18) over the period of the performance test is at least 98 percent by weight as calculated using Equations 2 and 3 of § 63.1566; or the TOC concentration measured by Method 25A (or the nonmethane TOC concentration measured by Methods 25A and 18) over the period of the performance test does not exceed 20 ppmv (dry basis as hexane) corrected to 3 percent oxygen as calculated using Equation 4 of § 63.1566. |

[70 FR 6953, Feb. 9, 2005]

**Table 20 to Subpart UUU of Part 63—Continuous Compliance With Organic HAP Emission Limits for Catalytic Reforming Units**

As stated in § 63.1566(c)(1), you shall meet each requirement in the following table that applies to you.

| For each applicable process vent for a new or existing catalytic reforming unit . . . | For this emission limit . . . | You shall demonstrate continuous compliance during initial catalyst depressuring and catalyst purging operations by . . . |
|---|---|---|
| 1. Option 1 | Vent emissions from your process vent to a flare that meets the requirements in § 63.11(b). | Maintaining visible emissions from a flare below a total of 5 minutes during any 2 consecutive hours. |
| 2. Option 2 | Reduce uncontrolled emissions of total organic compounds (TOC) or nonmethane TOC from your process vent by 98 percent by weight using a control device or to a concentration of 20 ppmv (dry basis as hexane), corrected to 3 percent oxygen, whichever is less stringent. | Maintaining a 98 percent by weight emission reduction of TOC or nonmethane TOC; or maintaining a TOC or nonmethane TOC concentration of not more than 20 ppmv (dry basis as hexane), corrected to 3 percent oxygen, whichever is less stringent. |

[70 FR 6954, Feb. 9, 2005]

**Table 21 to Subpart UUU of Part 63—Continuous Compliance With Operating Limits for Organic HAP Emissions From Catalytic Reforming Units**

As stated in § 63.1566(c)(1), you shall meet each requirement in the following table that applies to you.

| For each applicable process vent for a new or existing catalytic reforming unit . . . | If you use . . . | For this operating limit . . . | You shall demonstrate continuous compliance during initial catalyst depressuring and purging operations by . . . |
|---|---|---|---|
| 1. Option 1 | Flare that meets the requirements in § 63.11(b) | The flare pilot light must be present at all times and the flare must be operating at all times that emissions may be vented to it | Collecting flare monitoring data according to § 63.1572; and recording for each 1-hour period whether the monitor was continuously operating and the pilot light was continuously present during each 1-hour period. |
| 2. Option 2 | a. Thermal incinerator boiler or process heater with a design input capacity under 44 MW or boiler or process heater in which not all vent streams are not introduced into the flame zone | Maintain the daily average combustion zone temperature above the limit established during the performance test | Collecting, the hourly and daily temperature monitoring data according to § 63.1572; and maintaining the daily average combustion zone temperature above the limit established during the performance test. |
| | b. No control device | Operate at all times according to your operation, maintenance, and monitoring plan regarding minimum purging conditions that must be met prior to allowing uncontrolled purge releases | Recording information to document compliance with the procedures in your operation, maintenance, and monitoring plan. |

[70 FR 6954, Feb. 9, 2005]

**Table 22 to Subpart UUU of Part 63—Inorganic HAP Emission Limits for Catalytic Reforming Units**

As stated in § 63.1567(a)(1), you shall meet each emission limitation in the following table that applies to you.

| For . . . | You shall meet this emission limit for each applicable catalytic reforming unit process vent during coke burn-off and catalyst rejuvenation . . . |
|---|---|
| 1. Each existing semi-regenerative catalytic reforming unit | Reduce uncontrolled emissions of hydrogen chloride (HCl) by 92 percent by weight or to a concentration of 30 ppmv (dry basis), corrected to 3 percent oxygen. |
| 2. Each existing cyclic or continous catalytic reforming unit | Reduce uncontrolled emissions of HCl by 97 percent by weight or to a concentration of 10 ppmv (dry basis), corrected to 3 percent oxygen. |
| 3. Each new semi-regenerative, cyclic, or continous catalytic reforming unit | Reduce uncontrolled emissions of HCl by 97 percent by weight or to a concentration of 10 ppmv (dry basis), corrected to 3 percent oxygen. |

[70 FR 6955, Feb. 9, 2005]

**Table 23 to Subpart UUU of Part 63—Operating Limits for Inorganic HAP Emission Limitations for Catalytic Reforming Units**

As stated in § 63.1567(a)(2), you shall meet each operating limit in the following table that applies to you.

| For each applicable process vent for a new or existing catalytic reforming unit with this type of control device . . . | You shall meet this operating limit during coke burn-off and catalyst rejuvenation . . . |
|---|---|
| 1. Wet scrubber | The daily average pH or alkalinity of the water (or scrubbing liquid) exiting the scrubber must not fall below the limit established during the performance test; and the daily average liquid-to-gas ratio must not fall below the limit established during the performance test. |
| 2. Internal scrubbing system or no control device (*e.g.*, hot regen system) meeting outlet HCl concentration limit. | The daily average HCl concentration in the catalyst regenerator exhaust gas must not exceed the limit established during the performance test. |
| 3. Internal scrubbing system meeting HCl percent reduction standard. | The daily average pH or alkalinity of the water (or scrubbing liquid) exiting the internal scrubbing system must not fall below the limit established during the performance test; and the daily average liquid-to-gas ratio must not fall below the limit established during the performance test. |
| 4. Fixed-bed gas-solid adsorption system | The daily average temperature of the gas entering or exiting the adsorption system must not exceed the limit established during the performance test; and the HCl concentration in the adsorption system exhaust gas must not exceed the limit established during the performance test. |
| 5. Moving-bed gas-solid adsorption system (*e.g.*, Chlorsorb ™System). | The daily average temperature of the gas entering or exiting the adsorption system must not exceed the limit established during the performance test; and the weekly average chloride level on the sorbent entering the adsorption system must not exceed the design or manufacturer's recommended limit (1.35 weight percent for the Chlorsorb ™System); and the weekly average chloride level on the sorbent leaving the adsorption system must not exceed the design or manufacturer's recommended limit (1.8 weight percent for the Chlorsorb ™System). |

[70 FR 6955, Feb. 9, 2005]

**Table 24 to Subpart UUU of Part 63—Continuous Monitoring Systems for Inorganic HAP Emissions From Catalytic Reforming Units**

As stated in § 63.1567(b)(1), you shall meet each requirement in the following table that applies to you.

| If you use this type of control device for your vent . . . | You shall install and operate this type of continuous monitoring system . . . |
|---|---|
| 1. Wet scrubber | Continuous parameter monitoring system to measure and record the total water (or scrubbing liquid) flow rate entering the scrubber during coke burn-off and catalyst rejuvenation; and continuous parameter monitoring system to measure and record gas flow rate entering or exiting the scrubber during coke burn-off and catalyst rejuvenation [1]; and continuous parameter monitoring system to measure and record the pH or alkalinity of the water (or scrubbing liquid) exiting the scrubber during coke burn-off and catalyst rejuvenation. [2] |
| 2. Internal scrubbing system or no control device (e.g., hot regen system) to meet HC1 outlet concentration limit. | Colormetric tube sampling system to measure the HC1 concentration in the catalyst regenerator exhaust gas during coke burn-off and catalyst rejuvenation. The colormetric tube sampling system must meet the requirements in Table 41 of this subpart. |
| 3. Internal scrubbing system to meet HC1 percent reduction standard | Continuous parameter monitoring system to measure and record the gas flow rate entering or exiting the internal scrubbing system during coke burn-off and catalyst rejuvenation; and continuous parameter monitoring system to measure and record the total water (or scrubbing liquid) flow rate entering the internal scrubbing system during coke burn-off and catalyst rejuvenation; and continuous parameter monitoring system to measure and record the pH or alkalinity of the water (or scrubbing liquid) exiting the internal scrubbing system during coke burn-off and catalyst rejuvenation. [2] |
| 4. Fixed-bed gas-solid adsorption system | Continuous parameter monitoring system to measure and record the temperature of the gas entering or exiting the adsorption system during coke burn-off and catalyst rejuvenation; and colormetric tube sampling system to measure the gaseous HC1 concentration in the adsorption system exhaust and at a point within the absorbent bed not to exceed 90 percent of the total length of the absorbent bed during coke burn-off and catalyst rejuvenation. The colormetric tube sampling system must meet the requirements in Table 41 of this subpart. |
| 5. Moving-bed gas-solid adsorption system (e.g., Chlorsorb ™System). | Continuous parameter monitoring system to measure and record the temperature of the gas entering or exiting the adsorption system during coke burn-off and catalyst rejuvenation. |

[1] If applicable, you can use the alternative in § 63.1573 (a)(1) instead of a continuous parameter monitoring system for gas flow rate or instead of a continuous parameter monitoring system for the cumulative volume of gas.

[2] If applicable, you can use the alternative in § 63.1573(b)(1) instead of a continuous parameter monitoring system for pH of the water (or scrubbing liquid) or the alternative in § 63.1573(b)(2) instead of a continuous parameter monitoring system for alkalinity of the water (or scrubbing liquid).

[70 FR 6956, Feb. 9, 2005]

**Table 25 to Subpart UUU of Part 63—Requirements for Performance Tests for Inorganic HAP Emissions From Catalytic Reforming Units**

As stated in § 63.1567(b)(2) and (3), you shall meet each requirement in the following table that applies to you.

| For each new and existing catalytic reforming unit using . . . | You shall . . . | Using . . . | According to these requirements . . . |
|---|---|---|---|
| 1. Any or no control system | a. Select sampling port location(s) and the number of traverse points | Method 1 or 1A (40 CFR part 60, appendix A), as applicable. | (1) If you operate a control device and you elect to meet an applicable HCl percent reduction standard, sampling sites must be located at the inlet of the control device or internal scrubbing system and at the outlet of the control device or internal scrubber system prior to any release to the atmosphere. For a series of fixed-bed systems, the outlet sampling site should be located at the outlet of the first fixed-bed, prior to entering the second fixed-bed in the series. |
| | | | (2) If you elect to meet an applicable HCl outlet concentration limit, locate sampling sites at the outlet of the control device or internal scrubber system prior to any release to the atmosphere. For a series of fixed-bed systems, the outlet sampling site should be located at the outlet of the first fixed-bed, prior to entering the second fixed-bed in the series. If there is no control device, locate sampling sites at the outlet of the catalyst regenerator prior to any release to the atmosphere. |
| | b. Determine velocity and volumetric flow rate. | Method 2, 2A, 2C, 2D, 2F, or 2G (40 CFR part 60, appendix A), as applicable. | |
| | c. Conduct gas molecular weight analysis. | Method 3, 3A, or 3B (40 CFR part 60, appendix A), as applicable | |
| | d. Measure moisture content of the stack gas | Method 4 (40 CFR part 60, appendix A) | |
| | e. Measure the HCl concentration at the selected sampling locations | Method 26 or 26A (40 CFR part 60, appendix A). If your control device is a wet scrubber or internal scrubbing system, you must use Method 26A | (1) For semi-regenerative and cyclic regeneration units, conduct the test during the coke burn-off and catalyst rejuvenation cycle, but collect no samples during the first hour or the last 6 hours of the cycle (for semi-regenerative units) or during the first hour or the last 2 hours of the cycle (for cyclic regeneration units). For continuous regeneration units, the test should be conducted no sooner than 3 days after process unit or control system start up. |

| For each new and existing catalytic reforming unit using . . . | You shall . . . | Using . . . | According to these requirements . . . |
|---|---|---|---|
| | | | (2) Determine and record the HCl concentration corrected to 3 percent oxygen (using Equation 1 of § 63.1567) for each sampling location for each test run. |
| | | | (3) Determine and record the percent emission reduction, if applicable, using Equation 3 of § 63.1567 for each test run. |
| | | | (4) Determine and record the average HCl concentration (corrected to 3 percent oxygen) and the average percent emission reduction, if applicable, for the overall source test from the recorded test run values. |
| 2. Wet scrubber | a. Establish operating limit for pH level or alkalinity | i. Data from continuous parameter monitoring systems | Measure and record the pH or alkalinity of the water (or scrubbing liquid) exiting scrubber every 15 minutes during the entire period of the performance test. Determine and record the minimum hourly average pH or alkalinity level from the recorded values. |
| | | ii. Alternative pH procedure in § 63.1573 (b)(1). | Measure and record the pH of the water (or scrubbing liquid) exiting the scrubber during coke burn-off and catalyst rejuvenation using pH strips at least three times during each test run. Determine and record the average pH level for each test run. Determine and record the minimum test run average pH level. |
| | | iii. Alternative alkalinity method in § 63.1573(b)(2) | Measure and record the alkalinity of the water (or scrubbing liquid) exiting the scrubber during coke burn-off and catalyst rejuvenation using discrete titration at least three times during each test run. Determine and record the average alkalinity level for each test run. Determine and record the minimum test run average alkalinity level. |
| | b. Establish operating limit for liquid-to-gas ratio. | i. Data from continuous parameter monitoring systems | Measure and record the gas flow rate entering or exiting the scrubber and the total water (or scrubbing liquid) flow rate entering the scrubber every 15 minutes during the entire period of the performance test. Determine and record the hourly average gas flow rate and total water (or scrubbing liquid) flow rate. Determine and record the minimum liquid-to-gas ratio from the recorded, paired values. |

| For each new and existing catalytic reforming unit using . . . | You shall . . . | Using . . . | According to these requirements . . . |
|---|---|---|---|
| | | ii. Alternative procedure for gas flow rate in § 63.1573(a)(1) | Collect air flow rate monitoring data or determine the air flow rate using control room instruments every 15 minutes during the entire period of the initial performance test. Determine and record the hourly average rate of all the readings. Determine and record the maximum gas flow rate using Equation 1 of § 63.1573. |
| 3. Internal scrubbing system or no control device (e.g., hot regen system) meeting HCl outlet concentration limit. | Establish operating limit for HCl concentration. | Data from continuous parameter monitoring system. | Measure and record the HCl concentration in the catalyst regenerator exhaust gas using the colormetric tube sampling system at least three times during each test run. Determine and record the average HCl concentration for each test run. Determine and record the average HCl concentration for the overall source test from the recorded test run averages. Determine and record the operating limit for HCl concentration using Equation 4 of § 63.1567. |
| 4. Internal scrubbing system meeting HCl percent reduction standard | a. Establish operating limit for pH level or alkalinity | i. Data from continuous parameter monitoring system | Measure and record the pH alkalinity of the water (or scrubbing liquid) exiting the internal scrubbing system every 15 minutes during the entire period of the performance test. Determine and record the minimum hourly average pH or alkalinity level from the recorded values. |
| | | ii. Alternative pH method in § 63.1573(b)(1) | Measure and in record pH of the water (or scrubbing liquid) exiting the internal scrubbing system during coke burn-off and catalyst rejuvenation using pH strips at least three times during each test run. Determine and record the average pH level for each test run. Determine and record the minimum test run average pH level. |
| | | iii. Alternative alkalinity method in § 63.1573(b)(2) | Measure and record the alkalinity water (or scrubbing liquid) exiting the internal scrubbing system during coke burn-off and catalyst rejuvenation using discrete titration at least three times during each test run. Determine and record the average alkalinity level for each test run. Determine and record the minimum test run average alkalinity level. |

| For each new and existing catalytic reforming unit using . . . | You shall . . . | Using . . . | According to these requirements . . . |
|---|---|---|---|
| | b. Establish operating limit for liquid-to-gas ratio | Data from continuous parameter monitoring systems | Measure and record the gas entering or exiting the internal scrubbing system and the total water (or scrubbing liquid) flow rate entering the internal scrubbing system every 15 minutes during the entire period of the performance test. Determine and record the hourly average gas flow rate and total water (or scrubbing liquid) flow rate. Determine and record the minimum liquid-to-gas ratio from the recorded, paired values. |
| 5. Fixed-bed gas-solid adsorption system. Gas-solid | a. Establish operating limit for temperature | Data from continuous parameter monitoring system | Measure and record the temperature of gas entering or exiting the adsorption system every 15 minutes. Determine and record the maximum hourly average temperature. |
| | b. Establish operating limit for HCl concentration | i. Data from continuous parameter monitoring systems | (1) Measure and record the HCl concentration in the exhaust gas from the fixed-bed adsorption system using the colormetric tube sampling system at least three times during each test run. Determine and record the average HCl concentration for each test run. Determine and record the average HCl concentration for the overall source test from the recorded test run averages. |
| | | | (2) If you elect to comply with the HCl outlet concentration limit (Option 2), determine and record the operating limit for HCl concentration using Equation 4 of § 63.1567. If you elect to comply with the HCl percent reduction standard (Option 1), determine and record the operating limit for HCl concentration using Equation 5 of § 63.1567. |
| 6. Moving-bed gas-solid adsorption system (e.g., Chlorsorb ™System) | a. Establish operating limit for temperature | Data from continuous parameter monitoring systems. | Measure and record the temperature of gas entering or exiting the adsorption system every 15 minutes. Determine and record the maximum hourly average temperature. |

| For each new and existing catalytic reforming unit using . . . | You shall . . . | Using . . . | According to these requirements . . . |
|---|---|---|---|
| | b. Measure the chloride level on the sorbent entering and exiting the adsorption system. | Determination of Metal Concentration on Catalyst Particles (Instrumental Analyzer Procedure) in appendix A to subpart UUU; or EPA Method 5050 combined either with EPA Method 9056, or with EPA Method 9253; or EPA Method 9212 with the soil extraction procedures listed within the method.[1] | Measure and record the chloride concentration of the sorbent material entering and exiting the adsorption system at least three times during each test run. Determine and record the average weight percent chloride concentration of the sorbent entering the adsorption system for each test run. Determine and record the average weight percent chloride concentration of the sorbent exiting the adsorption system for each test run. |

[1] The EPA Methods 5050, 9056, 9212 and 9253 are included in "Test Methods for Evaluating Solid Waste, Physical/Chemical Methods," EPA Publication SW-846, Revision 5 (April 1998). The SW-846 and Updates (document number 955-001-00000-1) are available for purchase from the Superintendent of Documents, U.S. Government Printing Office, Washington, DC 20402, (202) 512-1800; and from the National Technical Information Services (NTIS), 5285 Port Royal Road, Springfield, VA 22161, (703) 487-4650. Copies may be inspected at the EPA Docket Center (Air Docket), EPA West, Room B-108, 1301 Constitution Ave., NW., Washington, DC; or at the Office of the Federal Register, 800 North Capitol Street, NW., Suite 700, Washington, DC. These methods are also available at*http://www.epa.gov/epaoswer/hazwaste/test/main.htm.*

[70 FR 6956, Feb. 9, 2005]

**Table 26 to Subpart UUU of Part 63—Initial Compliance With Inorganic HAP Emission Limits for Catalytic Reforming Units**

As stated in § 63.1567(b)(4), you shall meet each requirement in the following table that applies to you.

| For . . . | For the following emission limit . . . | You have demonstrated initial compliance if . . . |
|---|---|---|
| 1. Each existing semi-regenerative catalytic reforming unit | Reduce uncontrolled emissions of HCl by 92 percent by weight or to a concentration of 30 ppmv, (dry basis), corrected to 3 percent oxygen. | Average emissions HCl measured using Method 26 or 26A, as applicable, over the period of the performance test, are reduced by 92 percent or to a concentration less than or equal to 30 ppmv (dry basis) corrected to 3 percent oxygen. |
| 2. Each existing cyclic or continuous catalytic reforming unit and each new semi-regenerative, cyclic, or continuous catalytic reforming unit. | Reduce uncontrolled emissions of HCl by 97 percent by weight or to a concentration of 10 ppmv (dry basis), corrected to 3 percent oxygen | Average emissions of HCl measured using Method 26 or 26A, as applicable, over the period of the performance test, are reduced by 97 percent or to a concentration less than or equal to 10 ppmv (dry basis) corrected to 3 percent oxygen. |

[70 FR 6959, Feb. 9, 2005]

**Table 27 to Subpart UUU of Part 63—Continuous Compliance With Inorganic HAP Emission Limits for Catalytic Reforming Units**

As stated in § 63.1567(c)(1), you shall meet each requirement in the following table that applies to you.

| For . . . | For this emission limit . . . | You shall demonstrate continuous compliance during coke burn-off and catalyst rejuvenation by . . . |
|---|---|---|
| 1. Each existing semi-regenerative catalytic reforming unit | Reduce uncontrolled emissions of HCl by 92 percent by weight or to a concentration of 30 ppmv (dry basis), corrected to 3 percent oxygen. | Maintaining a 92 percent HCl emission reduction or an HCl concentration no more than 30 ppmv (dry basis), corrected to 3 percent oxygen. |
| 2. Each existing cyclic or continuous catalytic reforming unit | Reduce uncontrolled emissions of HCl by 97 percent by weight or to a concentration of 10 ppmv (dry basis), corrected to 3 percent oxygen | Maintaining a 97 percent HCl control efficiency or an HCl concentration no more than 10 ppmv (dry basis), corrected to 3 percent oxygen. |
| 3. Each new semi-regenerative, cyclic, or continuous catalytic reforming unit | Reduce uncontrolled emissions of HCl by 97 percent by weight or to a concentration of 10 ppmv (dry basis), corrected to 3 percent oxygen | Maintaining a 97 percent HCl control efficiency or an HCl concentration no more than 10 ppmv (dry basis), corrected to 3 percent oxygen. |

[70 FR 6960, Feb. 9, 2005]

**Table 28 to Subpart UUU of Part 63—Continuous Compliance With Operating Limits for Inorganic HAP Emissions From Catalytic Reforming Units**

As stated in § 63.1567(c)(1), you shall meet each requirement in the following table that applies to you.

| For each new and existing catalytic reforming unit using this type of control device or system . . . | For this operating limit . . . | You shall demonstrate continuous compliance during coke burn-off and catalyst rejuvenation by . . . |
|---|---|---|
| 1. Wet scrubber | a. The daily average pH or alkalinity of the water (or scrubbing liquid) exiting the scrubber must not fall below the level established during the performance test | Collecting the hourly and daily average pH or alkalinity monitoring data according to § 63.1572 [1]; and maintaining the daily average pH or alkalinity above the operating limit established during the performance test. |
| | b. The daily average liquid-to-gas ratio must not fall below the level established during the performance test | Collecting the hourly average gas flow rate [2]and total water (or scrubbing liquid) flow rate monitoring data according to § 63.1572; and determining and recording the hourly average liquid-to-gas ratio; and determining and recording the daily average liquid-to-gas ratio; and maintaining the daily average liquid-to-gas ratio above the limit established during the performance test. |
| 2. Internal scrubbing system or no control device (e.g., hot regen system) meeting HCl concentration limit | The daily average HCl concentration in the catalyst regenerator exhaust gas must not exceed the limit established during the performance test | Measuring and recording the HCl concentration at least 4 times during a regeneration cycle (equally spaced in time) or every 4 hours, whichever is more frequent, using a colormetric tube sampling system; calculating the daily average HCl concentration as an arithmetic average of all samples collected in each 24-hour period from the start of the coke burn-off cycle or for the entire duration of the coke burn-off cycle if the coke burn-off cycle is less than 24 hours; and maintaining the daily average HCl concentration below the applicable operating limit. |

| For each new and existing catalytic reforming unit using this type of control device or system . . . | For this operating limit . . . | You shall demonstrate continuous compliance during coke burn-off and catalyst rejuvenation by . . . |
|---|---|---|
| 3. Internal scrubbing system meeting percent HCl reduction standard | a. The daily average pH or alkalinity of the water (or scrubbing liquid) exiting the internal scrubbing system must not fall below the limit established during the performance test | Collecting the hourly and daily average pH or alkalinity monitoring data according to § 63.1572 [1]and maintaining the daily average pH or alkalinity above the operating limit established during the performance test. |
| | b. The daily average liquid-to-gas ratio must not fall below the level established during the performance test | Collecting the hourly average gas flow rate [2]and total water (or scrubbing liquid) flow rate monitoring data according to § 63.1572; and determining and recording the hourly average liquid-to-gas ratio; and determining and recording the daily average liquid-to-gas ratio; and maintaining the daily average liquid-to-gas ratio above the limit established during the performance test. |
| 4. Fixed-bed gas-solid adsorption systems | a. The daily average temperature of the gas entering or exiting the adsorption system must not exceed the limit established during the performance test | Collecting the hourly and daily average temperature monitoring data according to § 63.1572; and maintaining the daily average temperature below the operating limit established during the performance test. |
| | b. The HCl concentration in the exhaust gas from the fixed-bed gas-solid adsorption system must not exceed the limit established during the performance test | Measuring and recording the concentration of HCl weekly or during each regeneration cycle, whichever is less frequent, using a colormetric tube sampling system at a point within the adsorbent bed not to exceed 90 percent of the total length of the adsorption bed during coke-burn-off and catalyst rejuvenation; implementing procedures in the operating and maintenance plan if the HCl concentration at the sampling location within the adsorption bed exceeds the operating limit; and maintaining the HCl concentration in the gas from the adsorption system below the applicable operating limit. |
| 5. Moving-bed gas-solid adsorption system (e.g., Chlorsorb ™System | a. The daily average temperature of the gas entering or exiting the adsorption system must not exceed the limit established during the performance test | Collecting the hourly and daily average temperature monitoring data according to § 63.1572; and maintaining the daily average temperature below the operating limit established during the performance test. |
| | b. The weekly average chloride level on the sorbent entering the adsorption system must not exceed the design or manufacturer's recommended limit (1.35 weight percent for the Clorsorb ™ | Collecting samples of the sorbent exiting the adsorption system three times per week (on non-consecutive days); and analyzing the samples for total chloride [3]; and determining and recording the weekly average chloride concentration; and maintaining the chloride concentration below the design or manufacturer's recommended limit (1.35 weight percent for the Chlorsorb ™System). |
| | c. The weekly average chloride level on the sorbent exiting the adsorption system must not exceed the design or manufacturer's recommended limit (1.8 weight percent for the Clorsorb ™System) | Collecting samples of the sorbent exiting the adsorption system three times per week (on non-consecutive days); and analyzing the samples for total chloride concentration; and determining and recording the weekly average chloride concentration; and maintaining the chloride concentration below the design or manufacturer's recommended limit (1.8 weight percent Chlorsorb ™System). |

[1] If applicable, you can use either alternative in § 63.1573(b) instead of a continuous parameter monitoring system for pH or alkalinity if you used the alternative method in the initial performance test.

[2] If applicable, you can use the alternative in § 63.1573(a)(1) instead of a continuous parameter monitoring system for the gas flow rate or cumulative volume of gas entering or exiting the system if you used the alternative method in the initial performance test.

[3] The total chloride concentration of the sorbent material must be measured by the procedure, "Determination of Metal Concentration on Catalyst Particles (Instrumental Analyzer Procedure)" in appendix A to this subpart; or by using EPA Method 5050, Bomb Preparation Method for Solid Waste, combined either with EPA Method 9056, Determination of Inorganic Anions by Ion Chromatography, or with EPA Method 9253, Chloride (Titrimetric, Silver Nitrate); or by using EPA Method 9212, Potentiometric Determination of Chloride in Aqueous Samples with Ion-Selective Electrode, and using the soil extraction procedures listed within the method. The EPA Methods 5050, 9056, 9212 and 9253 are included in "Test Methods for Evaluating Solid Waste, Physical/Chemical Methods," EPA Publication SW-846, Revision 5 (April 1998). The SW-846 and Updates (document number 955-001-00000-1) are available for purchase from the Superintendent of Documents, U.S. Government Printing Office, Washington, DC 20402, (202) 512-1800; and from the National Technical Information Services (NTIS), 5285 Port Royal Road, Springfield, VA 22161, (703) 487-4650. Copies may be inspected at the EPA Docket Center (Air Docket), EPA West, Room B-108, 1301 Constitution Ave., NW., Washington, DC; or at the Office of the Federal Register, 800 North Capitol Street, NW., Suite 700, Washington, DC. These methods are also available at*http://www.epa.gov/epaoswer/hazwaste/test/main.htm*.

[70 FR 6954, Feb. 9, 2005]

**Table 29 to Subpart UUU of Part 63—HAP Emission Limits for Sulfur Recovery Units**

As stated in § 63.1568(a)(1), you shall meet each emission limitation in the following table that applies to you.

| For . . . | You shall meet this emission limit for each process vent . . . |
|---|---|
| 1. Each new or existing Claus sulfur recovery unit part of a sulfur recovery plant of 20 long tons per day or more and subject to the NSPS for sulfur oxides in 40 CFR 60.104(a)(2). | a. 250 ppmv (dry basis) of sulfur dioxide ($SO_2$) at zero percent excess air if you use an oxidation or reduction control system followed by incineration.<br>b. 300 ppmv of reduced sulfur compounds calculated as ppmv $SO_2$(dry basis) at zero percent excess air if you use a reduction control system without incineration. |
| 2. Each new or existing sulfur recovery unit (Claus or other type, regardless of size) not subject to the NSPS for sulfur oxides in 40 CFR 60.104(a)(2): Option 1 (Elect NSPS). | a. 250 ppmv (dry basis) of $SO_2$at zero percent excess air if you use an oxidation or reduction control system followed by incineration.<br>b. 300 ppmv of reduced sulfur compounds calculated as ppmv $SO_2$(dry basis) at zero percent excess air if you use a reduction control system without incineration. |
| 3. Each new or existing sulfur recovery unit (Claus or other type, regardless of size) not subject to the NSPS for sulfur oxides in paragraph (a)(2) of 40 CFR 60.104: Option 2 (TRS limit). | 300 ppmv of total reduced sulfur (TRS) compounds, expressed as an equivalent $SO_2$concentration (dry basis) at zero percent oxygen. |

[67 FR 17773, Apr. 11, 2002, as amended at 70 FR 6942, Feb. 9, 2005]

**Table 30 to Subpart UUU of Part 63—Operating Limits for HAP Emissions From Sulfur Recovery Units**

As stated in § 63.1568(a)(2), you shall meet each operating limit in the following table that applies to you.

| For . . . | If use this type of control device | You shall meet this operating limit. . . |
|---|---|---|
| 1. Each new or existing Claus sulfur recovery unit part of a sulfur recovery plant of 20 long tons per day or more and subject to the NSPS for sulfur oxides in 40 CFR 60.104(a)(2). | Not applicable | Not applicable. |
| 2. Each new or existing sulfur recovery unit (Claus or other type, regardless of size) not subject to the NSPS for sulfur oxides in 40 CFR 60.104(a)(2): Option 1 (Elect NSPS). | Not applicable | Not applicable. |
| 3. Each new or existing sulfur recovery unit (Claus or other type, regardless of size) not subject to the NSPS for sulfur oxides in 40 CFR 60.104(a)(2): Option 2 (TRS limit). | Thermal incinerator | Maintain the daily average combustion zone temperature above the limit established during the performance test; and maintain the daily average oxygen concentration in the vent stream (percent, dry basis) above the limit established during the performance test. |

[67 FR 17773, Apr. 11, 2002, as amended at 70 FR 6942, Feb. 9, 2005]

**Table 31 to Subpart UUU of Part 63—Continuous Monitoring Systems for HAP Emissions From Sulfur Recovery Units**

As stated in § 63.1568(b)(1), you shall meet each requirement in the following table that applies to you.

| For . . . | For this limit . . . | You shall install and operate this continuous monitoring system . . . |
|---|---|---|
| 1. Each new or existing Claus sulfur recovery unit part of a sulfur recovery plant of 20 long tons per day or more and subject to the NSPS for sulfur oxides in 40 CFR 60.104(a)(2) | a. 250 ppmv (dry basis) of $SO_2$at zero percent excess air if you use an oxidation or reduction control system followed by incineration | Continuous emission monitoring system to measure and record the hourly average concentration of $SO_2$(dry basis) at zero percent excess air for each exhaust stack. This system must include an oxygen monitor for correcting the data for excess air. |
| | b. 300 ppmv of reduced sulfur compounds calculated as ppmv $SO_2$(dry basis) at zero percent excess air if you use a reduction control system without incineration | Continuous emission monitoring system to measure and record the hourly average concentration of reduced sulfur and oxygen ($O_2$) emissions. Calculate the reduced sulfur emissions as $SO_2$(dry basis) at zero percent excess air.*Exception:*You can use an instrument having an air or $SO_2$dilution and oxidation system to convert the reduced sulfur to $SO_2$for continuously monitoring and recording the concentration (dry basis) at zero percent excess air of the resultant $SO_2$instead of the reduced sulfur monitor. The monitor must include an oxygen monitor for correcting the data for excess oxygen. |
| 2. Option 1: Elect NSPS. Each new or existing sulfur recovery unit (Claus or other type, regardless of size) not subject to the NSPS for sulfur oxides in paragraph (a) (2) of 40 CFR 60.104 | a. 250 ppmv (dry basis) of $SO_2$at zero percent excess air if you use an oxidation or reduction control system followed by incineration | Continuous emission monitoring system to measure and record the hourly average concentration of $SO_2$(dry basis), at zero percent excess air for each exhaust stack. This system must include an oxygen monitor for correcting the data for excess air. |

| For . . . | For this limit . . . | You shall install and operate this continuous monitoring system . . . |
|---|---|---|
| | b. 300 ppmv of reduced sulfur compounds calculated as ppmv $SO_2$(dry basis) at zero percent excess air if you use a reduction control system without incineration. | Continuous emission monitoring system to measure and record the hourly average concentration of reduced sulfur and $O_2$emissions for each exhaust stack. Calculate the reduced sulfur emissions as $SO_2$(dry basis), at zero percent excess air.*Exception:*You can use an instrument having an air or $O_2$dilution and oxidation system to convert the reduced sulfur to $SO_2$for continuously monitoring and recording the concentration (dry basis) at zero percent excess air of the resultant $SO_2$instead of the reduced sulfur monitor. The monitor must include an oxygen monitor for correcting the data for excess oxygen. |
| 3. Option 2: TRS limit. Each new or existing sulfur recovery unit (Claus or other type, regardless of size) not subject to the NSPS for sulfur oxides in 40 CFR 60.104(a)(2) | 300 ppmv of total reduced sulfur (TRS) compounds, expressed as an equivalent $SO_2$concentration (dry basis) at zero percent oxygen | i. Continuous emission monitoring system to measure and record the hourly average concentration of TRS for each exhaust stack; this monitor must include an oxygen monitor for correcting the data for excess oxygen; or |
| | | ii. Continuous parameter monitoring systems to measure and record the combustion zone temperature of each thermal incinerator and the oxygen content (percent, dry basis) in the vent stream of the incinerator. |

[67 FR 17773, Apr. 11, 2002, as amended at 70 FR 6942 and 6961, Feb. 9, 2005]

**Table 32 to Subpart UUU of Part 63—Requirements for Performance Tests for HAP Emissions From Sulfur Recovery Units Not Subject to the New Source Performance Standards for Sulfur Oxides**

As stated in § 63.1568(b)(2) and (3), you shall meet each requirement in the following table that applies to you.

| For . . . | You must . . . | Using . . . | According to these requirements . . . |
|---|---|---|---|
| 1. Each new and existing sulfur recovery unit: Option 1 (Elect NSPS). | Measure $SO_2$concentration (for an oxidation or reduction system followed by incineration) or the concentration of reduced sulfur (or $SO_2$if you use an instrument to convert the reduced sulfur to $SO_2$) for a reduction control system without incineration. | Data from continuous emission monitoring system. | Collect $SO_2$monitoring data every 15 minutes for 24 consecutive operating hours. Reduce the data to 1-hour averages computed from four or more data points equally spaced over each 1-hour period. |
| 2. Each new and existing sulfur recovery unit: Option 2 (TRS limit). | a. Select sampling port's location and the number of traverse ports. | Method 1 or 1A appendix A to part 60 of this chapter. | Sampling sites must be located at the outlet of the control device and prior to any releases to the atmosphere. |
| | b. Determine velocity and volumetric flow rate. | Method 2, 2A, 2C, 2D, 2F, or 2G in appendix A to part 60 of this chapter, as applicable. | |

| For . . . | You must . . . | Using . . . | According to these requirements . . . |
|---|---|---|---|
| | c. Conduct gas molecular weight analysis; obtain the oxygen concentration needed to correct the emission rate for excess air. | Method 3, 3A, or 3B in appendix A to part 60 of this chapter, as applicable. | Take the samples simultaneously with reduced sulfur or moisture samples. |
| | d. Measure moisture content of the stack gas. | Method 4 in appendix A to part 60 of this chapter. | Make your sampling time for each Method 4 sample equal to that for 4 Method 15 samples. |
| | e. Measure the concentration of TRS. | Method 15 or 15A in appendix A to part 60 of this chapter, as applicable. | If the cross-sectional area of the duct is less than 5 square meters ($m^2$) or 54 square feet, you must use the centroid of the cross section as the sampling point. If the cross-sectional area is 5 $m^2$or more and the centroid is more than 1 meter (m) from the wall, your sampling point may be at a point no closer to the walls than 1 m or 39 inches. Your sampling rate must be at least 3 liters per minute or 0.10 cubic feet per minute to ensure minimum residence time for the sample inside the sample lines. |
| | f. Calculate the $SO_2$equivalent for each run after correcting for moisture and oxygen. | The arithmetic average of the $SO_2$equivalent for each sample during the run. | |
| | g. Correct the reduced sulfur samples to zero percent excess air.sa | Equation 1 of § 63.1568. | |
| | h. Establish each operating limit in Table 30 of this subpart that applies to you. | Data from the continuous parameter monitoring system. | |
| | i. Measure thermal incinerator: combustion zone temperature. | Data from the continuous parameter monitoring system. | Collect temperature monitoring data every 15 minutes during the entire period of the performance test; and determine and record the minimum hourly average temperature from all the readings. |
| | j. Measure thermal incinerator: oxygen concentration (percent, dry basis) in the vent stream. | Data from the continuous parameter monitoring system. | Collect oxygen concentration (percent, dry basis) data every 15 minutes during the entire period of the performance test; and determine and record the minimum hourly average percent excess oxygen concentration. |
| | k. If you use a continuous emission monitoring system, measure TRS concentration. | Data from continuous emission monitoring system. | Collect TRS data every 15 minutes for 24 consecutive operating hours. Reduce the data to 1-hour averages computed from four or more data points equally spaced over each 1-hour period. |

[67 FR 17773, Apr. 11, 2002, as amended at 70 FR 6942, Feb. 9, 2005]

**Table 33 to Subpart UUU of Part 63—Initial Compliance With HAP Emission Limits for Sulfur Recovery Units**

As stated in § 63.1568(b)(5), you shall meet each requirement in the following table that applies to you.

| For . . . | For the following emission limit . . . | You have demonstrated initial compliance if . . . |
|---|---|---|
| 1. Each new or existing Claus sulfur recovery unit part of a sulfur recovery plant of 20 long tons per day or more and subject to the NSPS for sulfur oxides in 40 CFR 60.104(a)(2) | a. 250 pmv (dry basis) $SO_2$at zero percent excess air if you use an oxidation or reduction control system followed by incineration | You have already conducted a performance test to demonstrate initial compliance with the NSPS and each 12-hour rolling average concentration of $SO_2$emissions measured by the continuous emission monitoring system is less than or equal to 250 ppmv (dry basis) at zero percent excess air. As part of the Notification of Compliance Status, you must certify that your vent meets the $SO_2$limit. You are not required to do another performance test to demonstrate initial compliance. You have already conducted a performance evaluation to demonstrate initial compliance with the applicable performance specification. As part of your Notification of Compliance Status, you must certify that your continuous emission monitoring system meets the applicable requirements in § 63.1572. You are not required to do another performance evaluation to demonstrate initial compliance. |
| | b. 300 ppmv of reduced sulfur compounds calculated as ppmv $SO_2$(dry basis) at zero percent excess air if you use a reduction control system without incineration | You have already conducted a performance test to demonstrate initial compliance with the NSPS and each 12-hour rolling average concentration of reduced sulfur compounds measured by your continuous emission monitoring system is less than or equal to 300 ppmv, calculated as ppmv $SO_2$(dry basis) at zero percent excess air. As part of the Notification of Compliance Status, you must certify that your vent meets the $SO_2$limit. You are not required to do another performance test to demonstrate initial compliance. You have already conducted a performance evaluation to demonstrate initial compliance with the applicable performance specification. As part of your Notification of Compliance Status, you must certify that your continuous emission monitoring system meets the applicable requirements in § 63.1572. You are not required to do another performance evaluation to demonstrate initial compliance. |
| 2. Option 1: Elect NSPS. Each new or existing sulfur recovery unit (Claus or other type, regardless of size) not subject to the NSPS for sulfur oxides in 40 CFR 60.104(a)(2) | a. 250 ppmv (dry basis) of $SO_2$at zero percent excess air if you use an oxidation or reduction control system followed by incineration | Each 12-hour rolling average concentration of $SO_2$emissions measured by the continuous emission monitoring system during the initial performance test is less than or equal to 250 ppmv (dry basis) at zero percent excess air; and your performance evaluation shows the monitoring system meets the applicable requirements in § 63.1572. |
| | b. 300 ppmv of reduced sulfur compounds calculated as ppmv $SO_2$(dry basis) at zero percent excess air if you use a reduction control system without incineration | Each 12-hour rolling average concentration of reduced sulfur compounds measured by the continuous emission monitoring system during the initial performance test is less than or equal to 300 ppmv, calculated as ppmv $SO_2$(dry basis) at zero percent excess air; and your performance evaluation shows the continuous emission monitoring system meets the applicable requirements in § 63.1572. |

| For . . . | For the following emission limit . . . | You have demonstrated initial compliance if . . . |
|---|---|---|
| 3. Option 2: TRS limit. Each new or existing sulfur recovery unit (Claus or other type, regardless of size) not subject to the NSPS for sulfur oxides in 40 CFR 60.104(a)(2) | 300 ppmv of TRS compounds expressed as an equivalent $SO_2$concentration (dry basis) at zero percent oxygen | If you use continuous parameter monitoring systems, the average concentration of TRS emissions measured using Method 15 during the initial performance test is less than or equal to 300 ppmv expressed as equivalent $SO_2$concentration (dry basis) at zero percent oxygen. If you use a continuous emission monitoring system, each 12-hour rolling average concentration of TRS emissions measured by the continuous emission monitoring system during the initial performance test is less than or equal to 300 ppmv expressed as an equivalent $SO_2$(dry basis) at zero percent oxygen; and your performance evaluation shows the continuous emission monitoring system meets the applicable requirements in § 63.1572. |

[70 FR 6962, Feb. 9, 2005]

**Table 34 to Subpart UUU of Part 63—Continuous Compliance With HAP Emission Limits for Sulfur Recovery Units**

As stated in § 63.1568(c)(1), you shall meet each requirement in the following table that applies to you.

| For . . . | For this emission limit . . . | You shall demonstrate continuous compliance by . . . |
|---|---|---|
| 1. Each new or existing Claus sulfur recovery unit part of a sulfur recovery plant of 20 long tons per day or more and subject to the NSPS for sulfur oxides in 40 CFR 60.104(a)(2). | a. 250 ppmv (dry basis) of $SO_2$at zero percent excess air if you use an oxidation or reduction control system followed by incineration. | Collecting the hourly average $SO_2$monitoring data (dry basis, percent excess air) according to § 63.1572; determining and recording each 12-hour rolling average concentration of $SO_2$; maintaining each 12-hour rolling average concentration of $SO_2$at or below the applicable emission limitation; and reporting any 12-hour rolling average concentration of $SO_2$greater than the applicable emission limitation in the compliance report required by § 63.1575. |
| | b. 300 ppmv of reduced sulfur compounds calculated as ppmv $SO_2$(dry basis) at zero percent excess air if you use a reduction control system without incineration. | Collecting the hourly average reduced sulfur (and air or $O_2$dilution and oxidation) monitoring data according to § 63.1572; determining and recording each 12-hour rolling average concentration of reduced sulfur; maintaining each 12-hour rolling average concentration of reduced sulfur at or below the applicable emission limitation; and reporting any 12-hour rolling average concentration of reduced sulfur greater than the applicable emission limitation in the compliance report required by § 63.1575. |
| 2. Option 1: Elect NSPS. Each new or existing sulfur recovery unit (Claus or other type, regardless of size) not subject to the NSPS for sulfur oxides in 40 CFR 60.104(a)(2). | a. 250 ppmv (dry basis) of $SO_2$at zero percent excess air if you use an oxidation or reduction control system followed by incineration. | Collecting the hourly average $SO_2$data (dry basis, percent excess air) according to § 63.1572; determining and recording each 12-hour rolling average concentration of $SO_2$; maintaining each 12-hour rolling average concentration of $SO_2$at or below the applicable emission limitation; and reporting any 12-hour rolling average concentration of $SO_2$greater than the applicable emission limitation in the compliance report required by § 63.1575. |

| For . . . | For this emission limit . . . | You shall demonstrate continuous compliance by . . . |
|---|---|---|
| | b. 300 ppmv of reduced sulfur compounds calculated as ppmv $SO_2$(dry basis) at zero percent excess air if you use a reduction control system without incineration. | Collecting the hourly average reduced sulfur (and air or $O_2$dilution and oxidation) monitoring data according to § 63.1572; determining and recording each 12-hour rolling average concentration of reduced sulfur; maintaining each 12-hour rolling average concentration of reduced sulfur at or below the applicable emission limitation; and reporting any 12-hour rolling average concentration of reduced sulfur greater than the applicable emission limitation in the compliance report required by § 63.1575. |
| 3. Option 2: TRS limit. Each new or existing sulfur recovery unit (Claus or other type, regardless of size) not subject to the NSPS for sulfur oxides in 40 CFR 60.104(a)(2). | 300 ppmv of TRS compounds, expressed as an $SO_2$concentration (dry basis) at zero percent oxygen or reduced sulfur compounds calculated as ppmv $SO_2$(dry basis) at zero percent excess air. | i. If you use continuous parameter monitoring systems, collecting the hourly average TRS monitoring data according to § 63.1572 and maintaining each 12-hour average concentration of TRS at or below the applicable emission limitation; or |
| | | ii. If you use a continuous emission monitoring system, collecting the hourly average TRS monitoring data according to § 63.1572, determining and recording each 12-hour rolling average concentration of TRS; maintaining each 12-hour rolling average concentration of TRS at or below the applicable emission limitation; and reporting any 12-hour rolling average TRS concentration greater than the applicable emission limitation in the compliance report required by § 63.1575. |

[70 FR 6963, Feb. 9, 2005]

**Table 35 to Subpart UUU of Part 63—Continuous Compliance With Operating Limits for HAP Emissions From Sulfur Recovery Units**

As stated in § 63.1568(c)(1), you shall meet each requirement in the following table that applies to you.

| For . . . | For this operating limit . . . | You shall demonstrate continuous compliance by . . . |
|---|---|---|
| 1. Each new or existing Claus sulfur recovery unit part of a sulfur recovery plant of 20 long tons per day or more and subject to the NSPS for sulfur oxides in paragraph 40 CFR 60.104(a)(2). | Not applicable | Meeting the requirements of Table 34 of this subpart. |
| 2. Option 1: Elect NSPS Each new or existing sulfur recovery unit (Claus or other type, regardless of size) not subject to the NSPS for sulfur oxides in 40 CFR 60.104(a)(2) | Not applicable | Meeting the requirements of Table 34 of this subpart. |

| For . . . | For this operating limit . . . | You shall demonstrate continuous compliance by . . . |
|---|---|---|
| 3. Option 2: TRS limit Each new or existing sulfur recovery unit (Claus or other type, regardless of size) not subject to the NSPS for sulfur oxides in 40 CFR 60.104(a)(2) | a. Maintain the daily average combustion zone temperature above the level established during the performance test. | Collecting the hourly and daily average temperature monitoring data according to § 63.1572; and maintaining the daily average combustion zone temperature at or above the limit established during the performance test. |
| | b. The daily average oxygen concentration in the vent stream (percent, dry basis) must not fall below the level established during the performance test. | Collecting the hourly and daily average $O_2$monitoring data according to § 63.1572; and maintaining the average $O_2$concentration above the level established during the performance test. |

[67 FR 17773, Apr. 11, 2002, as amended at 70 FR 6942, Feb. 9, 2005]

**Table 36 to Subpart UUU of Part 63—Work Practice Standards for HAP Emissions From Bypass Lines**

As stated in § 63.1569(a)(1), you shall meet each work practice standard in the following table that applies to you.

| Option | You shall meet one of these equipment standards . . . |
|---|---|
| 1. Option 1 | Install and operate a device (including a flow indicator, level recorder, or electronic valve position monitor) to demonstrate, either continuously or at least every hour, whether flow is present in the by bypass line. Install the device at or as near as practical to the entrance to any bypass line that could divert the vent stream away from the control device to the atmosphere. |
| 2. Option 2 | Install a car-seal or lock-and-key device placed on the mechanism by which the bypass device flow position is controlled (e.g., valve handle, damper level) when the bypass device is in the closed position such that the bypass line valve cannot be opened without breaking the seal or removing the device. |
| 3. Option 3 | Seal the bypass line by installing a solid blind between piping flanges. |
| 4. Option 4 | Vent the bypass line to a control device that meets the appropriate requirements in this subpart. |

[67 FR 17773, Apr. 11, 2002, as amended at 70 FR 6942 and 6964, Feb. 9, 2005]

**Table 37 to Subpart UUU of Part 63—Requirements for Performance Tests for Bypass Lines**

As stated in § 63.1569(b)(1), you shall meet each requirement in the following table that applies to you.

| For this standard . . . | You shall . . . |
|---|---|
| 1. Option 1: Install and operate a flow indicator, level recorder, or electronic valve position monitor. | Record during the performance test for each type of control device whether the flow indicator, level recorder, or electronic valve position monitor was operating and whether flow was detected at any time during each hour of level the three runs comprising the performance test. |

[67 FR 17773, Apr. 11, 2002, as amended at 70 FR 6942, Feb. 9, 2005]

**Table 38 to Subpart UUU of Part 63—Initial Compliance With Work Practice Standards for HAP Emissions From Bypass Lines**

As stated in § 63.1569(b)(2), you shall meet each requirement in the following table that applies to you.

| Option . . . | For this work practice standard . . . | You have demonstrated initial compliance if . . . |
|---|---|---|
| 1. Each new or existing bypass line associated with a catalytic cracking unit, catalytic reforming unit, or sulfur recovery unit | a. Option 1: Install and operate a device (including a flow indicator, level recorder, or electronic valve position monitor) to demonstrate, either continuously or at least every hour, whether flow is present in bypass line. Install the device at or as near as practical to the entrance to any bypass line that could divert the vent stream away from the control device to the atmosphere | The installed equipment operates properly during each run of the performance test and no flow is present in the line during the test. |
| | b. Option 2: Install a car-seal or lock-and-key device placed on the mechanism by which the bypass device flow position is controlled (e.g., valve handle, damper level) when the bypass device is in the closed position such that the bypass line valve cannot be opened without breaking the seal or removing the device | As part of the notification of compliance status, you certify that you installed the equipment, the equipment was operational by your compliance date, and you identify what equipment was installed. |
| | c. Option 3: Seal the bypass line by installing a solid blind between piping flanges | See item 1.b of this table. |
| | d. Option 4: Vent the bypass line to a control device that meets the appropriate requirements in this subpart | See item 1.b of this table. |

[70 FR 6965, Feb. 9, 2005]

**Table 39 to Subpart UUU of Part 63—Continuous Compliance With Work Practice Standards for HAP Emissions From Bypass Lines**

| This type of continuous opacity or emission monitoring system . . . | Must meet these requirements . . . |
|---|---|
| 1. Continuous opacity monitoring system | Performance specification 1 (40 CFR part 60, appendix B). |
| 2. CO continuous emission monitoring system | Performance specification 4 (40 CFR part 60, appendix B); span value of 1,000 ppm; and procedure 1 (40 CFR part 60, appendix F) except relative accuracy test audits are required annually instead of quarterly. |
| 3. CO continuous emission monitoring system used to demonstrate emissions average under 50 ppm (dry basis). | Performance specification 4 (40 CFR part 60, appendix B); and span value of 100 ppm. |
| 4. $SO_2$continuous emission monitoring system for sulfur recovery unit with oxidation control system or reduction control system; this monitor must include an $O_2$monitor for correcting the data for excess air. | Performance specification 2 (40 CFR part 60, appendix B); span value of 500 ppm $SO_2$; use Methods 6 or 6C and 3A or 3B (40 CFR part 60, appendix A) for certifying $O_2$monitor; and procedure 1 (40 CFR part 60, appendix F) except relative accuracy test audits are required annually instead of quarterly. |
| 5. Reduced sulfur and $O_2$continuous emission monitoring system for sulfur recovery unit with reduction control system not followed by incineration; this monitor must include an $O_2$monitor for correcting the data for excess air unless exempted. | Performance specification 5 (40 CFR part 60, appendix B), except calibration drift specification is 2.5 percent of the span value instead of 5 percent; 450 ppm reduced sulfur; use Methods 15 or 15A and 3A or 3B (40 CFR part 60, appendix A) for certifying $O_2$monitor; if Method 3A or 3B yields $O_2$concentrations below 0.25 percent during the performance evaluation, the $O_2$concentration can be assumed to be zero and the $O_2$monitor is not required; and procedure 1 (40 CFR part 60, appendix F), except relative accuracy test audits, are required annually instead of quarterly. |
| 6. Instrument with an air or $O_2$dilution and oxidation system to convert reduced sulfur to $SO_2$for continuously monitoring the concentration of $SO_2$instead of reduced sulfur monitor and $O_2$monitor. | Performance specification 5 (40 CFR part 60, appendix B); span value of 375 ppm $SO_2$; use Methods 15 or 15A and 3A or 3B for certifying $O_2$monitor; and procedure 1 (40 CFR part 60, appendix F), except relative accuracy test audits, are required annually instead of quarterly. |

| | |
|---|---|
| 7. TRS continuous emission monitoring system for sulfur recovery unit; this monitor must include an $O_2$monitor for correcting the data for excess air. | Performance specification 5 (40 CFR part 60, appendix B). |
| 8. $O_2$monitor for oxygen concentration. | If necessary due to interferences, locate the oxygen sensor prior to the introduction of any outside gas stream; performance specification 3 (40 CFR part 60, appendix B; and procedure 1 (40 CFR part 60, appendix F), except relative accuracy test audits, are required annually instead of quarterly. |

As stated in § 63.1569(c)(1), you shall meet each requirement in the following table that applies to you.

| If you elect this standard . . . | You shall demonstrate continuous compliance by . . . |
|---|---|
| 1. Option 1: Flow indicator, level recorder, or electronic valve position monitor. | Monitoring and recording on a continuous basis or at least every hour whether flow is present in the bypass line; visually inspecting the device at least once every hour if the device is not equipped with a recording system that provides a continuous record; and recording whether the device is operating properly and whether flow is present in the bypass line. |
| 2. Option 2: Car-seal or lock-and-key device | Visually inspecting the seal or closure mechanism at least once every month; and recording whether the bypass line valve is maintained in the closed position and whether flow is present in the line. |
| 3. Option 3: Solid blind flange | Visually inspecting the blind at least once a month; and recording whether the blind is maintained in the correct position such that the vent stream cannot be diverted through the bypass line. |
| 4. Option 4: Vent to control device | Monitoring the control device according to appropriate subpart requirements. |
| 5. Option 1, 2, 3, or 4 | Recording and reporting the time and duration of any bypass. |

[67 FR 17773, Apr. 11, 2002, as amended at 70 FR 6942 and 6965, Feb. 9, 2005]

**Table 40 to Subpart UUU of Part 63—Requirements for Installation, Operation, and Maintenance of Continuous Opacity Monitoring Systems and Continuous Emission Monitoring Systems**

As stated in § 63.1572(a)(1) and (b)(1), you shall meet each requirement in the following table that applies to you.

[67 FR 17773, Apr. 11, 2002, as amended at 70 FR 6942 and 6965, Feb. 9, 2005]

**Table 41 to Subpart UUU of Part 63—Requirements for Installation, Operation, and Maintenance of Continuous Parameter Monitoring Systems**

As stated in § 63.1572(c)(1), you shall meet each requirement in the following table that applies to you.

| If you use . . . | You shall . . . |
|---|---|
| 1. pH strips | Use pH strips with an accuracy of ±10 percent. |
| 2. Colormetric tube sampling system | Use a colormetric tube sampling system with a printed numerical scale in ppmv, a standard measurement range of 1 to 10 ppmv (or 1 to 30 ppmv if applicable), and a standard deviation for measured values of no more than ±15 percent. System must include a gas detection pump and hot air probe if needed for the measurement range. |

[70 FR 6966, Feb. 9, 2005]

**Table 42 to Subpart UUU of Part 63—Additional Information for Initial Notification of Compliance Status**

As stated in § 63.1574(d), you shall meet each requirement in the following table that applies to you.

| For . . . | You shall provide this additional information . . . |
|---|---|
| 1. Identification of affected sources and emission points. | Nature, size, design, method of operation, operating design capacity of each affected source; identify each emission point for each HAP; identify any affected source or vent associated with an affected source not subject to the requirements of subpart UUU. |
| 2. Initial compliance | Identification of each emission limitation you will meet for each affected source, including any option you select (i.e., NSPS, PM or Ni, flare, percent reduction, concentration, options for bypass lines); if applicable, certification that you have already conducted a performance test to demonstrate initial compliance with the NSPS for an affected source; certification that the vents meet the applicable emission limit and the continuous opacity or that the emission monitoring system meets the applicable performance specification; if applicable, certification that you have installed and verified the operational status of equipment by your compliance date for each bypass line that meets the requirements of Option 2, 3, or 4 in § 63.1569 and what equipment you installed; identification of the operating limit for each affected source, including supporting documentation; if your affected source is subject to the NSPS, certification of compliance with NSPS emission limitations and performance specifications; a brief description of performance test conditions (capacity, feed quality, catalyst, etc.); an engineering assessment (if applicable); and if applicable, the flare design (e.g., steam-assisted, air-assisted, or non-assisted), all visible emission readings, heat content determinations, flow rate measurements, and exit velocity determinations made during the Method 22 test. |
| 3. Continuous compliance | Each monitoring option you elect; and identification of any unit or vent for which monitoring is not required; and the definition of “operating day.” (This definition, subject to approval by the applicable permitting authority, must specify the times at which a 24-hr operating day begins and ends.) |

[67 FR 17773, Apr. 11, 2002, as amended at 70 FR 6942, Feb. 9, 2005]

**Table 43 to Subpart UUU of Part 63—Requirements for Reports**

As stated in § 63.1575(a), you shall meet each requirement in the following table that applies to you.

| You must submit a(n) . . . | The report must contain . . . | You shall submit the report . . . |
|---|---|---|
| 1. Compliance report | If there are not deviations from any emission limitation or work practice standard that applies to you, a statement that there were no deviations from the standards during the reporting period and that no continuous opacity monitoring system or continuous emission monitoring system was inoperative, inactive, out-of-control, repaired, or adjusted; | Semiannually according to the requirements in § 63.1575(b). |
| | and if you have a deviation from any emission limitation or work practice standard during the reporting period, the report must contain the information in § 63.1575(d) or (e) | |

[67 FR 17773, Apr. 11, 2002, as amended at 70 FR 6942, Feb. 9, 2005]

**Table 44 to Subpart UUU of Part 63—Applicability of NESHAP General Provisions to Subpart UUU**

As stated in § 63.1577, you shall meet each requirement in the following table that applies to you.

| Citation | Subject | Applies to subpart UUU | Explanation |
|---|---|---|---|
| § 63.1 | Applicability | Yes | Except that subpart UUU specifies calendar or operating day. |
| § 63.2 | Definitions | Yes | |

| Citation | Subject | Applies to subpart UUU | Explanation |
|---|---|---|---|
| § 63.3 | Units and Abbreviations | Yes | |
| § 63.4 | Prohibited Activities | Yes | |
| § 63.5(A)-(C) | Construction and Reconstruction | Yes | In § 63.5(b)(4), replace the reference to § 63.9 with § 63.9(b)(4) and (5). |
| § 63.5(d)(1)(i) | Application for Approval of Construction or Reconstruction—General Application Requirements | Yes | Except, subpart UUU specifies the application is submitted as soon as practicable before startup but not later than 90 days (rather then 60) after the promulgation date where construction or reconstruction had commenced and initial startup had not occurred before promulgation. |
| § 63.5(d)(1)(ii) | | Yes | Except that emission estimates specified in § 63.5(d)(1)(ii)(H) are not required. |
| § 63.5(d)(1)(iii) | | No | Subpart UUU specifies submission of notification of compliance status. |
| § 63.5(d)(2) | | No | |
| § 63.5(d)(3) | | Yes | Except that § 63.5(d)(3)(ii) does not apply. |
| § 63.5(d0(4) | | Yes | |
| § 63.5(e) | Approval of Construction or Reconstruction | Yes | |
| § 63.5(f)(1) | Approval of Construction or Reconstruction Based on State Review | | |
| § 63.5(f)(2) | | Yes | Except that 60 days is changed to 90 days and cross-reference to 53.9(B)(2) does not apply. |
| § 63.6(a) | Compliance with Standards and Maintenance—Applicability | Yes | |
| § 63.6(b)(1)-(4) | Compliance Dates for New and Reconstructed Sources | Yes | |
| § 63.6(b)(5) | | Yes | Except that subpart UUU specifies different compliance dates for sources. |
| § 63.6(b)(6) | [Reserved] | Not applicable | |
| § 63.6(b)(7) | Compliance Dates for New and Reconstructed Area Sources That Become Major | Yes | |
| § 63.6(c)(1)-(2) | Compliance Dates for Existing Sources | Yes | Except that subpart UUU specifies different compliance dates for sources subject to Tier II gasoline sulfur control requirements. |
| § 63.6(c)(3)-(4) | [Reserved] | Not applicable | |
| § 63.6(c)(5) | Compliance Dates for Existing Area Sources That Become Major | Yes | |
| § 63.6(d) | [Reserved] | Not applicable | |
| § 63.6(e)(1)-(2) | Operation and Maintenance Requirements | Yes | |
| § 63.6(e)(3)(i)-(iii) | Startup, Shutdown, and Malfunction Plan | Yes | |

| Citation | Subject | Applies to subpart UUU | Explanation |
|---|---|---|---|
| § 63.6(e)(3)(iv) | | Yes | Except that reports of actions not consistent with plan are not required within 2 and 7 days of action but rather must be included in next periodic report. |
| § 63.6(e)(3)(v)-(viii) | | Yes | The owner or operator is only required to keep the latest version of the plan. |
| § 63.6(e)(3)(ix) | | Yes | |
| § 63.6(f)(1)-(2)(iii)(C) | Compliance with Emission Standards | Yes | |
| § 63.6(f)(2)(iii)(D) | | No | |
| § 63.6(f)(2)(iv)-(v) | | Yes | |
| § 63.6(f)(3) | | Yes | |
| § 63.6(g) | Alternative Standard | Yes | |
| § 63.6(h) | Opacity/VE Standards | Yes | |
| § 63.6(h)(2)(i) | Determining Compliance with Opacity/VE Standards | No | Subpart UUU specifies methods. |
| § 63.6(h)(2)(ii) | [Reserved] | Not applicable | |
| § 63.6(h)(2)(iii) | | Yes | |
| § 63.6(h)(3) | [Reserved] | Not applicable | |
| § 63.6(h)(4) | Notification of Opacity/VE Observation Date | Yes | Applies to Method 22 tests. |
| § 63.6(h)(5) | Conducting Opacity/VE Observations | No | |
| § 63.6(h)(6) | Records of Conditions During Opacity/VE Observations | Yes | Applies to Method 22 observations. |
| § 63.6(h)(7)(i) | Report COM Monitoring Data from Performance Test | Yes | |
| § 63.6(h)(7)(ii) | Using COM Instead of Method 9 | No | |
| § 63.6(h)(7)(iii) | Averaging Time for COM during Performance Test | Yes | |
| § 63.6(h)(7)(iv) | COM Requirements | Yes | |
| § 63.6(h)(8) | Determining Compliance with Opacity/VE Standards | Yes | |
| § 63.6(h)(9) | Adjusted Opacity Standard | Yes | |
| § 63.6(i)(1)-(14) | Extension of Compliance | Yes | Extension of compliance under § 63.6(i)(4) not applicable to a facility that installs catalytic cracking feed hydrotreating and receives an extended compliance date under § 63.1563(c). |
| § 63.6(i)(15) | [Reserved] | Not applicable | |
| § 63.6(i)(16) | | Yes | |
| § 63.6(j) | Presidential Compliance Exemption | Yes | |
| § 63.7(a)(1) | Performance Test Requirements Applicability | Yes | Except that subpart UUU specifies the applicable test and demonstration procedures. |
| § 63.7(a)(2) | Performance Test Dates | No | Test results must be submitted in the Notification of Compliance Status report due 150 days after the compliance date. |

| Citation | Subject | Applies to subpart UUU | Explanation |
|---|---|---|---|
| § 63.7(a)(3) | Section 114 Authority | Yes | |
| § 63.7(b) | Notifications | Yes | Except that subpart UUU specifies notification at least 30 days prior to the scheduled test date rather than 60 days. |
| § 63.7(c) | Quality Assurance Program/Site-Specific Test Plan | Yes | |
| § 63.7(d) | Performance Test Facilities | Yes | |
| § 63.7(e) | Conduct of Tests | Yes | |
| § 63.7(f) | Alternative Test Method | Yes | |
| § 63.7(g) | Data Analysis, Recordkeeping, Reporting | Yes | Except performance test reports must be submitted with notification of compliance status due 150 days after the compliance date. |
| § 63.7(h) | Waiver of Tests | Yes | |
| § 63.8(a)(1) | Monitoring Requirements-Applicability | Yes | |
| § 63.8(a)(2) | Performance Specifications | Yes | |
| § 63.8(a)(3) | [Reserved] | Not applicable | |
| § 63.8(a)(4) | Monitoring with Flares | Yes | |
| § 63.8(b)(1) | Conduct of Monitoring | Yes | |
| § 63.8(b)(2)-(3) | Multiple Effluents and Multiple Monitoring Systems | Yes | Subpart UUU specifies the required monitoring locations. |
| § 63.8(c)(1) | Monitoring System Operation and Maintenance | Yes | |
| § 63.8(c)(1)(i)-(ii) | Startup, Shutdown, and Malfunctions | Yes | Except that subpart UUU specifies that reports are not required if actions are consistent with the SSM plan, unless requested by the permitting authority. If actions are not consistent, actions must be described in next compliance report. |
| § 63.8(c)(1)(iii) | Compliance with Operation and Maintenance Requirements | Yes | |
| § 63.8(c)(2)-(3) | Monitoring System Installation | Yes | Except that subpart UUU specifies that for continuous parameter monitoring systems, operational status verification includes completion of manufacturer written specifications or installation, operation, and calibration of the system or other written procedures that provide adequate assurance that the equipment will monitor accurately. |
| § 63.8(c)(4) | Continuous Monitoring System Requirements | No | Subpart UUU specifies operational requirements. |
| § 63.8(c)(4)(i)-(ii) | Continuous Monitoring System Requirements | Yes | Except that these requirements apply only to a continuous opacity monitoring system or a continuous emission monitoring system if you are subject to the NSPS or elect to comply with the NSPS opacity, CO, or $SO_2$limits. |
| § 63.8(c)(5) | COM Minimum Procedures | Yes | |

| Citation | Subject | Applies to subpart UUU | Explanation |
|---|---|---|---|
| § 63.8(c)(6) | CMS Requirements | No | Except that these requirements apply only to a continuous opacity monitoring system or continuous emission monitoring system if you are subject to the NSPS or elect to comply with the NSPS opacity, CO, or $SO_2$limits. |
| § 63.8(c)(7)-(8) | CMS Requirements | Yes | |
| § 63.8(d) | Quality Control Program | Yes | Except that these requirements apply only to a continuous opacity monitoring system or continuous emission monitoring system if you are subject to the NSPS or elect to comply with the NSPS opacity, CO, or $SO_2$limits. |
| § 63.8(e) | CMS Performance Evaluation | Yes | Except that these requirements apply only to a continuous opacity monitoring system or continuous emission monitoring system if you are subject to the NSPS or elect to comply with the NSPS opacity, CO, or $SO_2$limits. Results are to be submitted as part of the Notification Compliance Status due 150 days after the compliance date. |
| § 63.8(f)(1)-(5) | Alternative Monitoring Methods | Yes | Except that subpart UUU specifies procedures for requesting alternative monitoring systems and alternative parameters. |
| § 63.8(f)(6) | Alternative to Relative Accuracy Test | Yes | Applicable to continuous emission monitoring systems if performance specification requires a relative accuracy test audit. |
| § 63.8(g)(1)-(4) | Reduction of Monitoring Data | Yes | Applies to continuous opacity monitoring system or continuous emission monitoring system. |
| § 63.8(g)(5) | Data Reduction | No | Subpart UUU specifies requirements. |
| § 63.9(a) | Notification Requirements—Applicability | Yes | Duplicate Notification of Compliance Status report to the Regional Administrator may be required. |
| § 63.9(b)(1)-(2), (4)-(5) | Initial Notifications | Yes | Except that notification of construction or reconstruction is to be submitted as soon as practicable before startup but no later than 30 days (rather than 60 days) after the effective date if construction or reconstruction had commenced but startup had not occurred before the effective date. |
| § 63.9(b)(3) | [Reserved] | | |
| § 63.9(c) | Request for Extension of Compliance | Yes | |
| § 63.9(d) | New Source Notification for Special Compliance Requirements | Yes | |
| § 63.9(e) | Notification of Performance Test | Yes | Except that notification is required at least 30 days before test. |
| § 63.9(f) | Notification of VE/Opacity Test | Yes | |
| § 63.9(g) | Additional Notification Requirements for Sources with Continuous Monitoring Systems | Yes | Except that these requirements apply only to a continuous opacity monitoring system or continuous emission monitoring system if you are subject to the NSPS or elect to comply with the NSPS opacity, CO, or $SO_2$limits. |
| § 63.9(h) | Notification of Compliance Status | Yes | Except that subpart UUU specifies the notification is due no later than 150 days after compliance date. |

| Citation | Subject | Applies to subpart UUU | Explanation |
|---|---|---|---|
| § 63.9(i) | Adjustment of Deadlines | Yes | |
| § 63.9(j) | Change in Previous Information | Yes | |
| 63. 10(a) | Recordkeeping and Reporting Applicability | Yes | |
| § 63.10(b) | Records | Yes | Except that § 63.10(b)(2)(xiii) applies if you use a continuous emission monitoring system to meet the NSPS or you select to meet the NSPS, CO, or $SO_2$reduced sulfur limit and the performance evaluation requires a relative accuracy test audit. |
| § 63.10(c)(1)-(6), (9)-(15) | Additional Records for Continuous Monitoring Systems | Yes | Except that these requirements apply if you use a continuous opacity monitoring system or a continuous emission monitoring system to meet the NSPS or elect to meet the NSPS opacity, CO, or $SO_2$limits. |
| § 63.10(c)(7)-(8) | Records of Excess Emissions and Exceedances | No | Subpart UUU specifies requirements. |
| § 63.10(d)(1) | General Reporting Requirements | Yes | |
| § 63.10(d)(2) | Performance Test Results | No | Subpart UUU requires performance test results to be reported as part of the Notification of Compliance Status due 150 days after the compliance date. |
| § 63.10(d)(3) | Opacity or VE Observations | Yes | |
| § 63.10(d)(4) | Progress Reports | Yes | |
| § 63.10(d)(5)(i) | Startup, Shutdown, and Malfunction Reports | Yes | Except that reports are not required if actions are consistent with the SSM plan, unless requested by permitting authority. |
| § 63.10(d)(5)(ii) | | Yes | Except that actions taken during a startup, shutdown, or malfunction that are not consistent with the plan do not need to be reported within 2 and 7 days of commencing and completing the action, respectively, but must be included in the next periodic report. |
| § 63.10(e)(1)-(2) | Additional CMS Reports | Yes | Except that these requirements apply only to a continuous opacity monitoring system or continuous emission monitoring system if you are subject to the NSPS or elect to comply with the NSPS opacity, CO, or $SO_2$limits. Reports of performance evaluations must be submitted in Notification of Compliance Status. |
| § 63.10(e)(3) | Excess Emissions/CMS Performance Reports | No | Subpart UUU specifies the applicable requirements. |
| § 63.10(e)(4) | COMS Data Reports | Yes | |
| § 63.10(f) | Recordkeeping/Reporting Waiver | Yes | |
| § 63.11 | Control Device Requirements | Yes | Applicable to flares. |
| § 63.13 | Addresses | Yes | |
| § 63.14 | Incorporation by Reference | Yes | |
| § 63.15 | Available of Information | Yes | |

[70 FR 6966, Feb. 9, 2005, as amended at 71 FR 20462, Apr. 20, 2006]

**Appendix A to Subpart UUU of Part 63—Determination of Metal Concentration on Catalyst Particles (Instrumental Analyzer Procedure)**

**1.0 Scope and Application.**

1.1 Analytes. The analytes for which this method is applicable include any elements with an atomic number between 11 (sodium) and 92 (uranium), inclusive. Specific analytes for which this method was developed include:

| Analyte | CAS No. | Minimum detectable limit |
|---|---|---|
| Nickel compounds | 7440-02-0 | <2 % of span. |
| Total chlorides | 16887-00-6 | <2 % of span. |

1.2 Applicability. This method is applicable to the determination of analyte concentrations on catalyst particles. This method is applicable for catalyst particles obtained from the fluid catalytic cracking unit (FCCU) regenerator ( *i.e.* , equilibrium catalyst), from air pollution control systems operated for the FCCU catalyst regenerator vent (FCCU fines), from catalytic reforming units (CRU), and other processes as specified within an applicable regulation. This method is applicable only when specified within the regulation.

1.3 Data Quality Objectives. Adherence to the requirements of this method will enhance the quality of the data obtained from the analytical method.

**2.0 Summary of Method.**

2.1 A representative sample of catalyst particles is collected, prepared, and analyzed for analyte concentration using either energy or wavelength dispersive X-ray flourescent (XRF) spectrometry instrumental analyzers. In both types of XRF spectrometers, the instrument irradiates the sample with high energy (primary) x-rays and the elements in the sample absorb the x-rays and then re-emit secondary (fluorescent) x-rays of characteristic wavelengths for each element present. In energy dispersive XRF spectrometers, all secondary x-rays (of all wavelengths) enter the detector at once. The detector registers an electric current having a height proportional to the photon energy, and these pulses are then separated electronically, using a pulse analyzer. In wavelength dispersive XRF spectrometers, the secondary x-rays are dispersed spatially by crystal diffraction on the basis of wavelength. The crystal and detector are made to synchronously rotate and the detector then receives only one wavelength at a time. The intensity of the x-rays emitted by each element is proportional to its concentration, after correcting for matrix effects. For nickel compounds and total chlorides, the XRF instrument response is expected to be linear to analyte concentration. Performance specifications and test procedures are provided to ensure reliable data.

**3.0 Definitions.**

3.1 Measurement System. The total equipment required for the determination of analyte concentration. The measurement system consists of the following major subsystems:

3.1.1 Sample Preparation. That portion of a system used for one or more of the following: sample acquisition, sample transport, sample conditioning, or sample preparation prior to introducing the sample into the analyzer.

3.1.2 Analyzer. That portion of the system that senses the analyte to be measured and generates an output proportional to its concentration.

3.1.3 Data Recorder. A digital recorder or personal computer used for recording measurement data from the analyzer output.

3.2 Span. The upper limit of the gas concentration measurement range displayed on the data recorder.

3.3 Calibration Standards. Prepared catalyst samples or other samples of known analyte concentrations used to calibrate the analyzer and to assess calibration drift.

3.4 Energy Calibration Standard. Calibration standard, generally provided by the XRF instrument manufacturer, used for assuring accuracy of the energy scale.

3.5 Accuracy Assessment Standard. Prepared catalyst sample or other sample of known analyte concentrations used to assess analyzer accuracy error.

3.6 Zero Drift. The difference in the measurement system output reading from the initial value for zero concentration level calibration standard after a stated period of operation during which no unscheduled maintenance, repair, or adjustment took place.

3.7 Calibration Drift. The difference in the measurement system output reading from the initial value for the mid-range calibration standard after a stated period of operation during which no unscheduled maintenance, repair, or adjustment took place.

3.8 Spectral Interferences. Analytical interferences and excessive biases caused by elemental peak overlap, escape peak, and sum peak interferences between elements in the samples.

3.9 Calibration Curve. A graph or other systematic method of establishing the relationship between the analyzer response and the actual analyte concentration introduced to the analyzer.

3.10 Analyzer Accuracy Error. The difference in the measurement system output reading and the ideal value for the accuracy assessment standard.

**4.0 Interferences.**

4.1 Spectral interferences with analyte line intensity determination are accounted for within the method program. No action is required by the XRF operator once these interferences have been addressed within the method.

4.2 The X-ray production efficiency is affected by particle size for the very lightest elements. However, particulate matter (PM) 2.5 particle size effects are substantially < 1 percent for most elements. The calibration standards should be prepared with material of similar particle size or be processed (ground) to produce material of similar particle size as the catalyst samples to be analyzed. No additional correction for particle size is performed. Alternatively, the sample can be fused in order to eliminate any potential particle size effects.

**5.0 Safety.**

5.1 Disclaimer. This method may involve hazardous materials, operations, and equipment. This test method may not address all of the safety problems associated with its use. It is the responsibility of the user of this test method to establish appropriate safety and health practices and determine the applicability of regulatory limitations prior to performing this test method.

5.2 X-ray Exposure. The XRF uses X-rays; XRF operators should follow instrument manufacturer's guidelines to protect from accidental exposure to X-rays when the instrument is in operation.

5.3 Beryllium Window. In most XRF units, a beryllium (Be) window is present to separate the sample chamber from the X-ray tube and detector. The window is very fragile and brittle. Do not allow sample or debris to fall onto the window, and avoid using compressed air to clean the window because it will cause the window to rupture. If the window should rupture, note that Be metal is poisonous. Use extreme caution when collecting pieces of Be and consult the instrument manufacturer for advice on cleanup of the broken window and replacement.

**6.0 Equipment and Supplies.**

6.1 Measurement System. Use any measurement system that meets the specifications of this method listed in section 13. The typical components of the measurement system are described below.

6.1.1 Sample Mixer/Mill. Stainless steel, or equivalent to grind/mix catalyst and binders, if used, to produce uniform particle samples.

6.1.2 Sample Press/Fluxer. Stainless steel, or equivalent to produce pellets of sufficient size to fill analyzer sample window, or alternatively, a fusion device capable of preparing a fused disk of sufficient size to fill analyzer sample window.

6.1.3 Analytical Balance. ±0.0001 gram accuracy for weighing prepared samples (pellets).

6.1.4 Analyzer. An XRF spectrometer to determine the analyte concentration in the prepared sample. The analyzer must meet the applicable performance specifications in section 13.

6.1.5 Data Recorder. A digital recorder or personal computer for recording measurement data. The data recorder resolution ( *i.e.* , readability) must be 0.5 percent of span. Alternatively, a digital or analog meter having a resolution of 0.5 percent of span may be used to obtain the analyzer responses and the readings may be recorded manually.

**7.0 Reagents and Standards.**

7.1 Calibration Standards. The calibration standards for the analyzer must be prepared catalyst samples or other material of similar particle size and matrix as the catalyst samples to be tested that have known concentrations of the analytes of interest. Preparation (grinding/milling/fusion) of the calibration standards should follow the same processes used to prepare the catalyst samples to be tested. The calibration standards values must be established as the average of a minimum of three analyses using an approved EPA or ASTM method with instrument analyzer calibrations traceable to the U.S. National Institute of Standards and Technology (NIST), if available. The maximum percent deviation of the triplicate calibration standard analyses should agree within 10 percent of the average value for the triplicate analysis (see Figure 1). If the calibration analyses do not meet this criteria, the calibration standards must be re-analyzed. If unacceptable variability persists, new calibration standards must be prepared. Approved methods for the calibration standard analyses include, but are not limited to, EPA Methods 6010B, 6020, 7520, or 7521 of SW-846.[1] Use a minimum of four calibration standards as specified below (see Figure 1):

7.1.1 High-Range Calibration Standard. Concentration equivalent to 80 to 100 percent of the span. The concentration of the high-range calibration standard should exceed the maximum concentration anticipated in the catalyst samples.

7.1.2 Mid-Range Calibration Standard. Concentration equivalent to 40 to 60 percent of the span.

7.1.3 Low-Range Calibration Standard. Concentration equivalent to 1 to 20 percent of the span. The concentration of the low-range calibration standard should be selected so that it is less than either one-forth of the applicable concentration limit or of the lowest concentration anticipated in the catalyst samples.

7.1.4 Zero Calibration Standard. Concentration of less than 0.25 percent of the span.

7.2 Accuracy Assessment Standard. Prepare an accuracy assessment standard and determine the ideal value for the accuracy assessment standard following the same procedures used to prepare and analyze the calibration standards as described in section 7.1. The maximum percent deviation of the triplicate accuracy assessment standard analyses should agree within 10 percent of the average value for the triplicate analysis (see Figure 1). The concentration equivalent of the accuracy assessment standard must be between 20 and 80 percent of the span.

7.3 Energy Calibration Standard. Generally, the energy calibration standard will be provided by the XRF instrument manufacturer for energy dispersive spectrometers. Energy calibration is performed using the manufacturer's recommended calibration standard and involves measurement of a specific energy line (based on the metal in the energy calibration standard). This is generally an automated procedure used to assure the accuracy of the energy scale. This calibration standard may not be applicable to all models of XRF spectrometers (particularly wavelength dispersive XRF spectrometers).

**8.0 Sample Collection, Preservation, Transport, and Storage. [Reserved]**

**9.0 Quality Control.**

9.1 Energy Calibration. For energy dispersive spectrometers, conduct the energy calibration by analyzing the energy calibration standard provided by the manufacturer. The energy calibration involves measurement of a specific energy line (based on the metal in the energy calibration standard) and then determination of the difference between the measured peak energy value and the ideal value. This analysis, if applicable, should be performed daily prior to any sample analyses to check the instrument's energy scale. This is generally an automated procedure and assures the accuracy of the energy scale. If the energy scale calibration process is not automated, follow the manufacturer's procedures to manually adjust the instrument, as necessary.

9.2 Zero Drift Test. Conduct the zero drift test by analyzing the analyte concentration output by the measurement system with the initial calibration value for the zero calibration standard (see Figure 2). This analysis should be performed with each set of samples analyzed.

9.3 Calibration Drift Test. Conduct the calibration drift test by analyzing the analyte concentration output by the measurement system with the initial calibration value for the mid-range calibration standard (see Figure 2). This analysis should be performed with each set of samples analyzed.

9.4 Analyzer Accuracy Test. Conduct the analyzer accuracy test by analyzing the accuracy assessment standard and comparing the value output by the measurement system with the ideal value for the accuracy assessment standard (see Figure 2). This analysis should be performed with each set of samples analyzed.

**10.0 Calibration and Standardization.**

10.1 Perform the initial calibration and set-up following the instrument manufacturer's instructions. These procedures should include, at a minimum, the major steps listed in sections 10.2 and 10.3. Subsequent calibrations are to be performed when either a quality assurance/quality control (QA/QC) limit listed in section 13 is exceeded or when there is a change in the excitation conditions, such as a change in the tube, detector, X-ray filters, or signal processor. Calibrations are typically valid for 6 months to 1 year.

10.2 Instrument Calibration. Calibration is performed initially with calibration standards of similar matrix and binders, if used, as the samples to be analyzed (see Figure 1).

10.3 Reference Peak Spectra. Acquisition of reference spectra is required only during the initial calibration. As long as no processing methods have changed, these peak shape references remain valid. This procedure consists of placing the standards in the instrument and acquiring individual elemental spectra that are stored in the method file with each of the analytical conditions. These reference spectra are used in the standard deconvolution of the unknown spectra.

**11.0 Analytical Procedure.**

11.1 Sample Preparation. Prepare catalyst samples using the same procedure used to prepare the calibration standards. Measure and record the weight of sample used. Measure and record the amount of binder, if any, used. Pellets or films must be of sufficient size to cover the analyzer sample window.

11.2 Sample Analyses. Place the prepared catalyst samples into the analyzer. Follow the manufacturer's instructions for analyzing the samples.

11.3 Record and Store Data. Use a digital recorder or personal computer to record and store results for each sample. Record any mechanical or software problems encountered during the analysis.

**12.0 Data Analysis and Calculations.**

Carry out the following calculations, retaining at least one extra significant figure beyond that of the acquired data. Round off figures after final calculation.

12.1 Drift. Calculate the zero and calibration drift for the tests described in sections 9.2 and 9.3 (see also Figure 2) as follows:

$$\text{QC Value} = \frac{\textit{CurrentAnalyzerCal}.\text{Response} - \text{InitialCal.Response}}{\text{Span}} \times 100 \qquad \text{(Eq. A-1)}$$

Where:

CurrentAnalyzerCal.Response = Instrument response for current QC sample analyses;

InitialCal.Response = Initial instrument response for calibration standard;

QC Value = QC metric (zero drift or calibration drift), percent of span;

Span = Span of the monitoring system.

12.2 Analyzer Accuracy. Calculate the analyzer accuracy error for the tests described in section 9.4 (see also Figure 2) as follows:

$$\text{Accuracy Value} = \frac{\textit{CurrentAnalyzerCal}.\text{Response} - \text{IdealCal.Response}}{\text{IdealCal.Response}} \times 100 \qquad \text{(Eq. A-2)}$$

Where:

Accuracy Value = Percent difference of instrument response to the ideal response for the accuracy assessment standard;

CurrentAnalyzerCal.Response = Instrument response for current QC sample analyses;

IdealCal.Response = Ideal instrument response for the accuracy assessment standard.

**13.0 Method Performance.**

13.1 Analytical Range. The analytical range is determined by the instrument design. For this method, a portion of the analytical range is selected by choosing the span of the monitoring system. The span of the monitoring system must be selected such that it encompasses the range of concentrations anticipated to occur in the catalyst sample. If applicable, the span must be selected such that the analyte concentration equivalent to the emission standard is not less than 30 percent of the span. If the measured analyte concentration exceeds the concentration of the high-range calibration standard, the sample analysis is considered invalid. Additionally, if the measured analyte concentration is less than the concentration of the low-range calibration standard but above the detectable limit, the sample analysis results must be flagged with a footnote stating, in effect, that the analyte was detected but that the reported concentration is below the lower quantitation limit.

13.2 Minimum Detectable Limit. The minimum detectable limit depends on the signal-to-noise ratio of the measurement system. For a well-designed system, the minimum detectable limit should be less than 2 percent of the span.

13.3 Zero Drift. Less than ±2 percent of the span.

13.4 Calibration Drift. Less than ±5 percent of the span.

13.5 Analyzer Accuracy Error. Less than ±10 percent.

**14.0 Pollution Prevention. [Reserved]**

**15.0 Waste Management. [Reserved]**

**16.0 Alternative Procedures. [Reserved]**

**17.0 References.**

1. U.S. Environmental Protection Agency. 1998. Test Methods for Evaluating Solid Waste, Physical/Chemical Methods. EPA Publication No. SW-846, Revision 5 (April 1998). Office of Solid Waste, Washington, DC.

**18.0 Tables, Diagrams, Flowcharts, and Validation Data.**

| **Date:** | | | | | |
|---|---|---|---|---|---|
| **Analytic Method Used:** | | | | | |
| | **Zero [a]** | **Low-Range [b]** | **Mid-Range [c]** | **High-Range [d]** | **Accuracy Std [e]** |
| Sample Run: | | | | | |
| 1 | | | | | |
| 2 | | | | | |
| 3 | | | | | |
| Average | | | | | |
| Maximum Percent Deviation | | | | | |

[a]Average must be less than 0.25 percent of span.

[b]Average must be 1 to 20 percent of span.

[c]Average must be 40 to 60 percent of span.

[d]Average must be 80 to 100 percent of span.

[e]Average must be 20 to 80 percent of span.

**Figure 1. Data Recording Sheet for Analysis of Calibration Samples.**

Source Identification:

Run Number:

Test Personnel:

Span:

Date:

| | **Initial calibration response** | **Current analyzer calibration response** | **Drift (percent of span)** |
|---|---|---|---|
| Zero Standard | | | |
| Mid-range Standard | | | |

| | **Ideal calibration response** | **Current analyzer calibration response** | **Accuracy error (percent of ideal)** |
|---|---|---|---|
| Accuracy Standard | | | |

Figure 2. Data Recording Sheet for System Calibration Drift Data.

[70 FR 6970, Feb. 9, 2005]

**Attachment C**
**To Part 70 Operating Permit Renewal No. T129-25424-00003**

[Downloaded from the eCFR on May 13, 2013]

**Electronic Code of Federal Regulations**

**Title 40: Protection of Environment**

**Part 60, Subpart Kb—Standards of Performance for Volatile Organic Liquid Storage Vessels (Including Petroleum Liquid Storage Vessels) for Which Construction, Reconstruction, or Modification Commenced After July 23, 1984**

SOURCE: 52 FR 11429, Apr. 8, 1987, unless otherwise noted.

**§ 60.110b Applicability and designation of affected facility.**

(a) Except as provided in paragraph (b) of this section, the affected facility to which this subpart applies is each storage vessel with a capacity greater than or equal to 75 cubic meters ($m^3$ ) that is used to store volatile organic liquids (VOL) for which construction, reconstruction, or modification is commenced after July 23, 1984.

(b) This subpart does not apply to storage vessels with a capacity greater than or equal to 151 $m^3$ storing a liquid with a maximum true vapor pressure less than 3.5 kilopascals (kPa) or with a capacity greater than or equal to 75 $m^3$ but less than 151 $m^3$ storing a liquid with a maximum true vapor pressure less than 15.0 kPa.

(c) [Reserved]

(d) This subpart does not apply to the following:

(1) Vessels at coke oven by-product plants.

(2) Pressure vessels designed to operate in excess of 204.9 kPa and without emissions to the atmosphere.

(3) Vessels permanently attached to mobile vehicles such as trucks, railcars, barges, or ships.

(4) Vessels with a design capacity less than or equal to 1,589.874 $m^3$ used for petroleum or condensate stored, processed, or treated prior to custody transfer.

(5) Vessels located at bulk gasoline plants.

(6) Storage vessels located at gasoline service stations.

(7) Vessels used to store beverage alcohol.

(8) Vessels subject to subpart GGGG of 40 CFR part 63.

(e) *Alternative means of compliance* —(1) *Option to comply with part 65.* Owners or operators may choose to comply with 40 CFR part 65, subpart C, to satisfy the requirements of §§ 60.112b through 60.117b for storage vessels that are subject to this subpart that meet the specifications in paragraphs (e)(1)(i) and (ii) of this section. When choosing to comply with 40 CFR part 65, subpart C, the monitoring requirements of § 60.116b(c), (e), (f)(1), and (g) still apply. Other provisions applying to owners or operators who choose to comply with 40 CFR part 65 are provided in 40 CFR 65.1.

(i) A storage vessel with a design capacity greater than or equal to 151 $m^3$ containing a VOL that, as stored, has a maximum true vapor pressure equal to or greater than 5.2 kPa; or

(ii) A storage vessel with a design capacity greater than 75 $m^3$ but less than 151 $m^3$ containing a VOL that, as stored, has a maximum true vapor pressure equal to or greater than 27.6 kPa.

(2) *Part 60, subpart A.* Owners or operators who choose to comply with 40 CFR part 65, subpart C, must also comply with §§ 60.1, 60.2, 60.5, 60.6, 60.7(a)(1) and (4), 60.14, 60.15, and 60.16 for those storage vessels. All sections and paragraphs of subpart A of this part that are not mentioned in this paragraph (e)(2) do not apply to owners or operators of storage vessels complying with 40 CFR part 65, subpart C, except that provisions required to be met prior to implementing 40 CFR part 65 still apply. Owners and operators who choose to comply with 40 CFR part 65, subpart C, must comply with 40 CFR part 65, subpart A.

(3) *Internal floating roof report.* If an owner or operator installs an internal floating roof and, at initial startup, chooses to comply with 40 CFR part 65, subpart C, a report shall be furnished to the Administrator stating that the control equipment meets the specifications of 40 CFR 65.43. This report shall be an attachment to the notification required by 40 CFR 65.5(b).

(4) *External floating roof report.* If an owner or operator installs an external floating roof and, at initial startup, chooses to comply with 40 CFR part 65, subpart C, a report shall be furnished to the Administrator stating that the control equipment meets the specifications of 40 CFR 65.44. This report shall be an attachment to the notification required by 40 CFR 65.5(b).

[52 FR 11429, Apr. 8, 1987, as amended at 54 FR 32973, Aug. 11, 1989; 65 FR 78275, Dec. 14, 2000; 68 FR 59332, Oct. 15, 2003]

**§ 60.111b Definitions.**

Terms used in this subpart are defined in the Act, in subpart A of this part, or in this subpart as follows:

*Bulk gasoline plant* means any gasoline distribution facility that has a gasoline throughput less than or equal to 75,700 liters per day. Gasoline throughput shall be the maximum calculated design throughput as may be limited by compliance with an enforceable condition under Federal requirement or Federal, State or local law, and discoverable by the Administrator and any other person.

*Condensate* means hydrocarbon liquid separated from natural gas that condenses due to changes in the temperature or pressure, or both, and remains liquid at standard conditions.

*Custody transfer* means the transfer of produced petroleum and/or condensate, after processing and/or treatment in the producing operations, from storage vessels or automatic transfer facilities to pipelines or any other forms of transportation.

*Fill* means the introduction of VOL into a storage vessel but not necessarily to complete capacity.

*Gasoline service station* means any site where gasoline is dispensed to motor vehicle fuel tanks from stationary storage tanks.

*Maximum true vapor pressure* means the equilibrium partial pressure exerted by the volatile organic compounds (as defined in 40 CFR 51.100) in the stored VOL at the temperature equal to the highest calendar-month average of the VOL storage temperature for VOL's stored above or below the ambient temperature or at the local maximum monthly average temperature as reported by the National Weather Service for VOL's stored at the ambient temperature, as determined:

(1) In accordance with methods described in American Petroleum institute Bulletin 2517, Evaporation Loss From External Floating Roof Tanks, (incorporated by reference—see § 60.17); or

(2) As obtained from standard reference texts; or

(3) As determined by ASTM D2879-83, 96, or 97 (incorporated by reference—see § 60.17);

(4) Any other method approved by the Administrator.

*Petroleum* means the crude oil removed from the earth and the oils derived from tar sands, shale, and coal.

*Petroleum liquids* means petroleum, condensate, and any finished or intermediate products manufactured in a petroleum refinery.

*Process tank* means a tank that is used within a process (including a solvent or raw material recovery process) to collect material discharged from a feedstock storage vessel or equipment within the process before the material is transferred to other equipment within the process, to a product or by-product storage vessel, or to a vessel used to store recovered solvent or raw material. In many process tanks, unit operations such as reactions and blending are conducted. Other process tanks, such as surge control vessels and bottoms receivers, however, may not involve unit operations.

*Reid vapor pressure* means the absolute vapor pressure of volatile crude oil and volatile nonviscous petroleum liquids except liquified petroleum gases, as determined by ASTM D323-82 or 94 (incorporated by reference—see § 60.17).

*Storage vessel* means each tank, reservoir, or container used for the storage of volatile organic liquids but does not include:

(1) Frames, housing, auxiliary supports, or other components that are not directly involved in the containment of liquids or vapors;

(2) Subsurface caverns or porous rock reservoirs; or

(3) Process tanks.

*Volatile organic liquid (VOL)* means any organic liquid which can emit volatile organic compounds (as defined in 40 CFR 51.100) into the atmosphere.

*Waste* means any liquid resulting from industrial, commercial, mining or agricultural operations, or from community activities that is discarded or is being accumulated, stored, or physically, chemically, or biologically treated prior to being discarded or recycled.

[52 FR 11429, Apr. 8, 1987, as amended at 54 FR 32973, Aug. 11, 1989; 65 FR 61756, Oct. 17, 2000; 68 FR 59333, Oct. 15, 2003]

**§ 60.112b Standard for volatile organic compounds (VOC).**

(a) The owner or operator of each storage vessel either with a design capacity greater than or equal to 151 $m^3$ containing a VOL that, as stored, has a maximum true vapor pressure equal to or greater than 5.2 kPa but less than 76.6 kPa or with a design capacity greater than or equal to 75 $m^3$ but less than 151 $m^3$ containing a VOL that, as stored, has a maximum true vapor pressure equal to or greater than 27.6 kPa but less than 76.6 kPa, shall equip each storage vessel with one of the following:

(1) A fixed roof in combination with an internal floating roof meeting the following specifications:

(i) The internal floating roof shall rest or float on the liquid surface (but not necessarily in complete contact with it) inside a storage vessel that has a fixed roof. The internal floating roof shall be floating on the liquid surface at all times, except during initial fill and during those intervals when the storage vessel is completely emptied or subsequently emptied and refilled. When the roof is resting on the leg supports, the process of filling, emptying, or refilling shall be continuous and shall be accomplished as rapidly as possible.

(ii) Each internal floating roof shall be equipped with one of the following closure devices between the wall of the storage vessel and the edge of the internal floating roof:

(A) A foam- or liquid-filled seal mounted in contact with the liquid (liquid-mounted seal). A liquid-mounted seal means a foam- or liquid-filled seal mounted in contact with the liquid between the wall of the storage vessel and the floating roof continuously around the circumference of the tank.

(B) Two seals mounted one above the other so that each forms a continuous closure that completely covers the space between the wall of the storage vessel and the edge of the internal floating roof. The lower seal may be vapor-mounted, but both must be continuous.

(C) A mechanical shoe seal. A mechanical shoe seal is a metal sheet held vertically against the wall of the storage vessel by springs or weighted levers and is connected by braces to the floating roof. A flexible coated fabric (envelope) spans the annular space between the metal sheet and the floating roof.

(iii) Each opening in a noncontact internal floating roof except for automatic bleeder vents (vacuum breaker vents) and the rim space vents is to provide a projection below the liquid surface.

(iv) Each opening in the internal floating roof except for leg sleeves, automatic bleeder vents, rim space vents, column wells, ladder wells, sample wells, and stub drains is to be equipped with a cover or lid which is to be maintained in a closed position at all times (i.e., no visible gap) except when the device is in actual use. The cover or lid shall be equipped with a gasket. Covers on each access hatch and automatic gauge float well shall be bolted except when they are in use.

(v) Automatic bleeder vents shall be equipped with a gasket and are to be closed at all times when the roof is floating except when the roof is being floated off or is being landed on the roof leg supports.

(vi) Rim space vents shall be equipped with a gasket and are to be set to open only when the internal floating roof is not floating or at the manufacturer's recommended setting.

(vii) Each penetration of the internal floating roof for the purpose of sampling shall be a sample well. The sample well shall have a slit fabric cover that covers at least 90 percent of the opening.

(viii) Each penetration of the internal floating roof that allows for passage of a column supporting the fixed roof shall have a flexible fabric sleeve seal or a gasketed sliding cover.

(ix) Each penetration of the internal floating roof that allows for passage of a ladder shall have a gasketed sliding cover.

(2) An external floating roof. An external floating roof means a pontoon-type or double-deck type cover that rests on the liquid surface in a vessel with no fixed roof. Each external floating roof must meet the following specifications:

(i) Each external floating roof shall be equipped with a closure device between the wall of the storage vessel and the roof edge. The closure device is to consist of two seals, one above the other. The lower seal is referred to as the primary seal, and the upper seal is referred to as the secondary seal.

(A) The primary seal shall be either a mechanical shoe seal or a liquid-mounted seal. Except as provided in § 60.113b(b)(4), the seal shall completely cover the annular space between the edge of the floating roof and tank wall.

(B) The secondary seal shall completely cover the annular space between the external floating roof and the wall of the storage vessel in a continuous fashion except as allowed in § 60.113b(b)(4).

(ii) Except for automatic bleeder vents and rim space vents, each opening in a noncontact external floating roof shall provide a projection below the liquid surface. Except for automatic bleeder vents, rim space vents, roof drains, and leg sleeves, each opening in the roof is to be equipped with a gasketed cover, seal, or lid that is to be maintained in a closed position at all times (i.e., no visible gap) except when the device is in actual use. Automatic bleeder vents are to be closed at all times when the roof is floating except when the roof is being floated off or is being landed on the roof leg supports. Rim vents are to be set to open when the roof is being floated off the roof legs supports or at the manufacturer's recommended setting. Automatic bleeder vents and rim space vents are to be gasketed. Each

emergency roof drain is to be provided with a slotted membrane fabric cover that covers at least 90 percent of the area of the opening.

(iii) The roof shall be floating on the liquid at all times (i.e., off the roof leg supports) except during initial fill until the roof is lifted off leg supports and when the tank is completely emptied and subsequently refilled. The process of filling, emptying, or refilling when the roof is resting on the leg supports shall be continuous and shall be accomplished as rapidly as possible.

(3) A closed vent system and control device meeting the following specifications:

(i) The closed vent system shall be designed to collect all VOC vapors and gases discharged from the storage vessel and operated with no detectable emissions as indicated by an instrument reading of less than 500 ppm above background and visual inspections, as determined in part 60, subpart VV, § 60.485(b).

(ii) The control device shall be designed and operated to reduce inlet VOC emissions by 95 percent or greater. If a flare is used as the control device, it shall meet the specifications described in the general control device requirements (§ 60.18) of the General Provisions.

(4) A system equivalent to those described in paragraphs (a)(1), (a)(2), or (a)(3) of this section as provided in § 60.114b of this subpart.

(b) The owner or operator of each storage vessel with a design capacity greater than or equal to 75 $m^3$ which contains a VOL that, as stored, has a maximum true vapor pressure greater than or equal to 76.6 kPa shall equip each storage vessel with one of the following:

(1) A closed vent system and control device as specified in § 60.112b(a)(3).

(2) A system equivalent to that described in paragraph (b)(1) as provided in § 60.114b of this subpart.

(c) *Site-specific standard for Merck & Co., Inc.'s Stonewall Plant in Elkton, Virginia.* This paragraph applies only to the pharmaceutical manufacturing facility, commonly referred to as the Stonewall Plant, located at Route 340 South, in Elkton, Virginia (“site”).

(1) For any storage vessel that otherwise would be subject to the control technology requirements of paragraphs (a) or (b) of this section, the site shall have the option of either complying directly with the requirements of this subpart, or reducing the site-wide total criteria pollutant emissions cap (total emissions cap) in accordance with the procedures set forth in a permit issued pursuant to 40 CFR 52.2454. If the site chooses the option of reducing the total emissions cap in accordance with the procedures set forth in such permit, the requirements of such permit shall apply in lieu of the otherwise applicable requirements of this subpart for such storage vessel.

(2) For any storage vessel at the site not subject to the requirements of 40 CFR 60.112b (a) or (b), the requirements of 40 CFR 60.116b (b) and (c) and the General Provisions (subpart A of this part) shall not apply.

[52 FR 11429, Apr. 8, 1987, as amended at 62 FR 52641, Oct. 8, 1997]

**§ 60.113b Testing and procedures.**

The owner or operator of each storage vessel as specified in § 60.112b(a) shall meet the requirements of paragraph (a), (b), or (c) of this section. The applicable paragraph for a particular storage vessel depends on the control equipment installed to meet the requirements of § 60.112b.

(a) After installing the control equipment required to meet § 60.112b(a)(1) (permanently affixed roof and internal floating roof), each owner or operator shall:

(1) Visually inspect the internal floating roof, the primary seal, and the secondary seal (if one is in service), prior to filling the storage vessel with VOL. If there are holes, tears, or other openings in the primary seal, the secondary seal,

or the seal fabric or defects in the internal floating roof, or both, the owner or operator shall repair the items before filling the storage vessel.

(2) For Vessels equipped with a liquid-mounted or mechanical shoe primary seal, visually inspect the internal floating roof and the primary seal or the secondary seal (if one is in service) through manholes and roof hatches on the fixed roof at least once every 12 months after initial fill. If the internal floating roof is not resting on the surface of the VOL inside the storage vessel, or there is liquid accumulated on the roof, or the seal is detached, or there are holes or tears in the seal fabric, the owner or operator shall repair the items or empty and remove the storage vessel from service within 45 days. If a failure that is detected during inspections required in this paragraph cannot be repaired within 45 days and if the vessel cannot be emptied within 45 days, a 30-day extension may be requested from the Administrator in the inspection report required in § 60.115b(a)(3). Such a request for an extension must document that alternate storage capacity is unavailable and specify a schedule of actions the company will take that will assure that the control equipment will be repaired or the vessel will be emptied as soon as possible.

(3) For vessels equipped with a double-seal system as specified in § 60.112b(a)(1)(ii)(B):

(i) Visually inspect the vessel as specified in paragraph (a)(4) of this section at least every 5 years; or

(ii) Visually inspect the vessel as specified in paragraph (a)(2) of this section.

(4) Visually inspect the internal floating roof, the primary seal, the secondary seal (if one is in service), gaskets, slotted membranes and sleeve seals (if any) each time the storage vessel is emptied and degassed. If the internal floating roof has defects, the primary seal has holes, tears, or other openings in the seal or the seal fabric, or the secondary seal has holes, tears, or other openings in the seal or the seal fabric, or the gaskets no longer close off the liquid surfaces from the atmosphere, or the slotted membrane has more than 10 percent open area, the owner or operator shall repair the items as necessary so that none of the conditions specified in this paragraph exist before refilling the storage vessel with VOL. In no event shall inspections conducted in accordance with this provision occur at intervals greater than 10 years in the case of vessels conducting the annual visual inspection as specified in paragraphs (a)(2) and (a)(3)(ii) of this section and at intervals no greater than 5 years in the case of vessels specified in paragraph (a)(3)(i) of this section.

(5) Notify the Administrator in writing at least 30 days prior to the filling or refilling of each storage vessel for which an inspection is required by paragraphs (a)(1) and (a)(4) of this section to afford the Administrator the opportunity to have an observer present. If the inspection required by paragraph (a)(4) of this section is not planned and the owner or operator could not have known about the inspection 30 days in advance or refilling the tank, the owner or operator shall notify the Administrator at least 7 days prior to the refilling of the storage vessel. Notification shall be made by telephone immediately followed by written documentation demonstrating why the inspection was unplanned. Alternatively, this notification including the written documentation may be made in writing and sent by express mail so that it is received by the Administrator at least 7 days prior to the refilling.

(b) After installing the control equipment required to meet § 60.112b(a)(2) (external floating roof), the owner or operator shall:

(1) Determine the gap areas and maximum gap widths, between the primary seal and the wall of the storage vessel and between the secondary seal and the wall of the storage vessel according to the following frequency.

(i) Measurements of gaps between the tank wall and the primary seal (seal gaps) shall be performed during the hydrostatic testing of the vessel or within 60 days of the initial fill with VOL and at least once every 5 years thereafter.

(ii) Measurements of gaps between the tank wall and the secondary seal shall be performed within 60 days of the initial fill with VOL and at least once per year thereafter.

(iii) If any source ceases to store VOL for a period of 1 year or more, subsequent introduction of VOL into the vessel shall be considered an initial fill for the purposes of paragraphs (b)(1)(i) and (b)(1)(ii) of this section.

(2) Determine gap widths and areas in the primary and secondary seals individually by the following procedures:

(i) Measure seal gaps, if any, at one or more floating roof levels when the roof is floating off the roof leg supports.

(ii) Measure seal gaps around the entire circumference of the tank in each place where a 0.32-cm diameter uniform probe passes freely (without forcing or binding against seal) between the seal and the wall of the storage vessel and measure the circumferential distance of each such location.

(iii) The total surface area of each gap described in paragraph (b)(2)(ii) of this section shall be determined by using probes of various widths to measure accurately the actual distance from the tank wall to the seal and multiplying each such width by its respective circumferential distance.

(3) Add the gap surface area of each gap location for the primary seal and the secondary seal individually and divide the sum for each seal by the nominal diameter of the tank and compare each ratio to the respective standards in paragraph (b)(4) of this section.

(4) Make necessary repairs or empty the storage vessel within 45 days of identification in any inspection for seals not meeting the requirements listed in (b)(4) (i) and (ii) of this section:

(i) The accumulated area of gaps between the tank wall and the mechanical shoe or liquid-mounted primary seal shall not exceed 212 $Cm^2$ per meter of tank diameter, and the width of any portion of any gap shall not exceed 3.81 cm.

(A) One end of the mechanical shoe is to extend into the stored liquid, and the other end is to extend a minimum vertical distance of 61 cm above the stored liquid surface.

(B) There are to be no holes, tears, or other openings in the shoe, seal fabric, or seal envelope.

(ii) The secondary seal is to meet the following requirements:

(A) The secondary seal is to be installed above the primary seal so that it completely covers the space between the roof edge and the tank wall except as provided in paragraph (b)(2)(iii) of this section.

(B) The accumulated area of gaps between the tank wall and the secondary seal shall not exceed 21.2 $cm^2$ per meter of tank diameter, and the width of any portion of any gap shall not exceed 1.27 cm.

(C) There are to be no holes, tears, or other openings in the seal or seal fabric.

(iii) If a failure that is detected during inspections required in paragraph (b)(1) of § 60.113b(b) cannot be repaired within 45 days and if the vessel cannot be emptied within 45 days, a 30-day extension may be requested from the Administrator in the inspection report required in § 60.115b(b)(4). Such extension request must include a demonstration of unavailability of alternate storage capacity and a specification of a schedule that will assure that the control equipment will be repaired or the vessel will be emptied as soon as possible.

(5) Notify the Administrator 30 days in advance of any gap measurements required by paragraph (b)(1) of this section to afford the Administrator the opportunity to have an observer present.

(6) Visually inspect the external floating roof, the primary seal, secondary seal, and fittings each time the vessel is emptied and degassed.

(i) If the external floating roof has defects, the primary seal has holes, tears, or other openings in the seal or the seal fabric, or the secondary seal has holes, tears, or other openings in the seal or the seal fabric, the owner or operator shall repair the items as necessary so that none of the conditions specified in this paragraph exist before filling or refilling the storage vessel with VOL.

(ii) For all the inspections required by paragraph (b)(6) of this section, the owner or operator shall notify the Administrator in writing at least 30 days prior to the filling or refilling of each storage vessel to afford the Administrator the opportunity to inspect the storage vessel prior to refilling. If the inspection required by paragraph (b)(6) of this section is not planned and the owner or operator could not have known about the inspection 30 days in advance of refilling the tank, the owner or operator shall notify the Administrator at least 7 days prior to the refilling of the storage vessel. Notification shall be made by telephone immediately followed by written documentation demonstrating why

the inspection was unplanned. Alternatively, this notification including the written documentation may be made in writing and sent by express mail so that it is received by the Administrator at least 7 days prior to the refilling.

(c) The owner or operator of each source that is equipped with a closed vent system and control device as required in § 60.112b (a)(3) or (b)(2) (other than a flare) is exempt from § 60.8 of the General Provisions and shall meet the following requirements.

(1) Submit for approval by the Administrator as an attachment to the notification required by § 60.7(a)(1) or, if the facility is exempt from § 60.7(a)(1), as an attachment to the notification required by § 60.7(a)(2), an operating plan containing the information listed below.

(i) Documentation demonstrating that the control device will achieve the required control efficiency during maximum loading conditions. This documentation is to include a description of the gas stream which enters the control device, including flow and VOC content under varying liquid level conditions (dynamic and static) and manufacturer's design specifications for the control device. If the control device or the closed vent capture system receives vapors, gases, or liquids other than fuels from sources that are not designated sources under this subpart, the efficiency demonstration is to include consideration of all vapors, gases, and liquids received by the closed vent capture system and control device. If an enclosed combustion device with a minimum residence time of 0.75 seconds and a minimum temperature of 816 °C is used to meet the 95 percent requirement, documentation that those conditions will exist is sufficient to meet the requirements of this paragraph.

(ii) A description of the parameter or parameters to be monitored to ensure that the control device will be operated in conformance with its design and an explanation of the criteria used for selection of that parameter (or parameters).

(2) Operate the closed vent system and control device and monitor the parameters of the closed vent system and control device in accordance with the operating plan submitted to the Administrator in accordance with paragraph (c)(1) of this section, unless the plan was modified by the Administrator during the review process. In this case, the modified plan applies.

(d) The owner or operator of each source that is equipped with a closed vent system and a flare to meet the requirements in § 60.112b (a)(3) or (b)(2) shall meet the requirements as specified in the general control device requirements, § 60.18 (e) and (f).

[52 FR 11429, Apr. 8, 1987, as amended at 54 FR 32973, Aug. 11, 1989]

**§ 60.114b Alternative means of emission limitation.**

(a) If, in the Administrator's judgment, an alternative means of emission limitation will achieve a reduction in emissions at least equivalent to the reduction in emissions achieved by any requirement in § 60.112b, the Administrator will publish in the FEDERAL REGISTER a notice permitting the use of the alternative means for purposes of compliance with that requirement.

(b) Any notice under paragraph (a) of this section will be published only after notice and an opportunity for a hearing.

(c) Any person seeking permission under this section shall submit to the Administrator a written application including:

(1) An actual emissions test that uses a full-sized or scale-model storage vessel that accurately collects and measures all VOC emissions from a given control device and that accurately simulates wind and accounts for other emission variables such as temperature and barometric pressure.

(2) An engineering evaluation that the Administrator determines is an accurate method of determining equivalence.

(d) The Administrator may condition the permission on requirements that may be necessary to ensure operation and maintenance to achieve the same emissions reduction as specified in § 60.112b.

**§ 60.115b Reporting and recordkeeping requirements.**

The owner or operator of each storage vessel as specified in § 60.112b(a) shall keep records and furnish reports as required by paragraphs (a), (b), or (c) of this section depending upon the control equipment installed to meet the requirements of § 60.112b. The owner or operator shall keep copies of all reports and records required by this section, except for the record required by (c)(1), for at least 2 years. The record required by (c)(1) will be kept for the life of the control equipment.

(a) After installing control equipment in accordance with § 60.112b(a)(1) (fixed roof and internal floating roof), the owner or operator shall meet the following requirements.

(1) Furnish the Administrator with a report that describes the control equipment and certifies that the control equipment meets the specifications of § 60.112b(a)(1) and § 60.113b(a)(1). This report shall be an attachment to the notification required by § 60.7(a)(3).

(2) Keep a record of each inspection performed as required by § 60.113b (a)(1), (a)(2), (a)(3), and (a)(4). Each record shall identify the storage vessel on which the inspection was performed and shall contain the date the vessel was inspected and the observed condition of each component of the control equipment (seals, internal floating roof, and fittings).

(3) If any of the conditions described in § 60.113b(a)(2) are detected during the annual visual inspection required by § 60.113b(a)(2), a report shall be furnished to the Administrator within 30 days of the inspection. Each report shall identify the storage vessel, the nature of the defects, and the date the storage vessel was emptied or the nature of and date the repair was made.

(4) After each inspection required by § 60.113b(a)(3) that finds holes or tears in the seal or seal fabric, or defects in the internal floating roof, or other control equipment defects listed in § 60.113b(a)(3)(ii), a report shall be furnished to the Administrator within 30 days of the inspection. The report shall identify the storage vessel and the reason it did not meet the specifications of § 61.112b(a)(1) or § 60.113b(a)(3) and list each repair made.

(b) After installing control equipment in accordance with § 61.112b(a)(2) (external floating roof), the owner or operator shall meet the following requirements.

(1) Furnish the Administrator with a report that describes the control equipment and certifies that the control equipment meets the specifications of § 60.112b(a)(2) and § 60.113b(b)(2), (b)(3), and (b)(4). This report shall be an attachment to the notification required by § 60.7(a)(3).

(2) Within 60 days of performing the seal gap measurements required by § 60.113b(b)(1), furnish the Administrator with a report that contains:

(i) The date of measurement.

(ii) The raw data obtained in the measurement.

(iii) The calculations described in § 60.113b (b)(2) and (b)(3).

(3) Keep a record of each gap measurement performed as required by § 60.113b(b). Each record shall identify the storage vessel in which the measurement was performed and shall contain:

(i) The date of measurement.

(ii) The raw data obtained in the measurement.

(iii) The calculations described in § 60.113b (b)(2) and (b)(3).

(4) After each seal gap measurement that detects gaps exceeding the limitations specified by § 60.113b(b)(4), submit a report to the Administrator within 30 days of the inspection. The report will identify the vessel and contain the information specified in paragraph (b)(2) of this section and the date the vessel was emptied or the repairs made and date of repair.

(c) After installing control equipment in accordance with § 60.112b (a)(3) or (b)(1) (closed vent system and control device other than a flare), the owner or operator shall keep the following records.

(1) A copy of the operating plan.

(2) A record of the measured values of the parameters monitored in accordance with § 60.113b(c)(2).

(d) After installing a closed vent system and flare to comply with § 60.112b, the owner or operator shall meet the following requirements.

(1) A report containing the measurements required by § 60.18(f) (1), (2), (3), (4), (5), and (6) shall be furnished to the Administrator as required by § 60.8 of the General Provisions. This report shall be submitted within 6 months of the initial start-up date.

(2) Records shall be kept of all periods of operation during which the flare pilot flame is absent.

(3) Semiannual reports of all periods recorded under § 60.115b(d)(2) in which the pilot flame was absent shall be furnished to the Administrator.

**§ 60.116b Monitoring of operations.**

(a) The owner or operator shall keep copies of all records required by this section, except for the record required by paragraph (b) of this section, for at least 2 years. The record required by paragraph (b) of this section will be kept for the life of the source.

(b) The owner or operator of each storage vessel as specified in § 60.110b(a) shall keep readily accessible records showing the dimension of the storage vessel and an analysis showing the capacity of the storage vessel.

(c) Except as provided in paragraphs (f) and (g) of this section, the owner or operator of each storage vessel either with a design capacity greater than or equal to 151 $m^3$ storing a liquid with a maximum true vapor pressure greater than or equal to 3.5 kPa or with a design capacity greater than or equal to 75 $m^3$ but less than 151 $m^3$ storing a liquid with a maximum true vapor pressure greater than or equal to 15.0 kPa shall maintain a record of the VOL stored, the period of storage, and the maximum true vapor pressure of that VOL during the respective storage period.

(d) Except as provided in paragraph (g) of this section, the owner or operator of each storage vessel either with a design capacity greater than or equal to 151 $m^3$ storing a liquid with a maximum true vapor pressure that is normally less than 5.2 kPa or with a design capacity greater than or equal to 75 $m^3$ but less than 151 $m^3$ storing a liquid with a maximum true vapor pressure that is normally less than 27.6 kPa shall notify the Administrator within 30 days when the maximum true vapor pressure of the liquid exceeds the respective maximum true vapor vapor pressure values for each volume range.

(e) Available data on the storage temperature may be used to determine the maximum true vapor pressure as determined below.

(1) For vessels operated above or below ambient temperatures, the maximum true vapor pressure is calculated based upon the highest expected calendar-month average of the storage temperature. For vessels operated at ambient temperatures, the maximum true vapor pressure is calculated based upon the maximum local monthly average ambient temperature as reported by the National Weather Service.

(2) For crude oil or refined petroleum products the vapor pressure may be obtained by the following:

(i) Available data on the Reid vapor pressure and the maximum expected storage temperature based on the highest expected calendar-month average temperature of the stored product may be used to determine the maximum true vapor pressure from nomographs contained in API Bulletin 2517 (incorporated by reference—see § 60.17), unless the Administrator specifically requests that the liquid be sampled, the actual storage temperature determined, and the Reid vapor pressure determined from the sample(s).

(ii) The true vapor pressure of each type of crude oil with a Reid vapor pressure less than 13.8 kPa or with physical properties that preclude determination by the recommended method is to be determined from available data and recorded if the estimated maximum true vapor pressure is greater than 3.5 kPa.

(3) For other liquids, the vapor pressure:

(i) May be obtained from standard reference texts, or

(ii) Determined by ASTM D2879-83, 96, or 97 (incorporated by reference—see § 60.17); or

(iii) Measured by an appropriate method approved by the Administrator; or

(iv) Calculated by an appropriate method approved by the Administrator.

(f) The owner or operator of each vessel storing a waste mixture of indeterminate or variable composition shall be subject to the following requirements.

(1) Prior to the initial filling of the vessel, the highest maximum true vapor pressure for the range of anticipated liquid compositions to be stored will be determined using the methods described in paragraph (e) of this section.

(2) For vessels in which the vapor pressure of the anticipated liquid composition is above the cutoff for monitoring but below the cutoff for controls as defined in § 60.112b(a), an initial physical test of the vapor pressure is required; and a physical test at least once every 6 months thereafter is required as determined by the following methods:

(i) ASTM D2879-83, 96, or 97 (incorporated by reference—see § 60.17); or

(ii) ASTM D323-82 or 94 (incorporated by reference—see § 60.17); or

(iii) As measured by an appropriate method as approved by the Administrator.

(g) The owner or operator of each vessel equipped with a closed vent system and control device meeting the specification of § 60.112b or with emissions reductions equipment as specified in 40 CFR 65.42(b)(4), (b)(5), (b)(6), or (c) is exempt from the requirements of paragraphs (c) and (d) of this section.

[52 FR 11429, Apr. 8, 1987, as amended at 65 FR 61756, Oct. 17, 2000; 65 FR 78276, Dec. 14, 2000; 68 FR 59333, Oct. 15, 2003]

**§ 60.117b Delegation of authority.**

(a) In delegating implementation and enforcement authority to a State under section 111(c) of the Act, the authorities contained in paragraph (b) of this section shall be retained by the Administrator and not transferred to a State.

(b) Authorities which will not be delegated to States: §§ 60.111b(f)(4), 60.114b, 60.116b(e)(3)(iii), 60.116b(e)(3)(iv), and 60.116b(f)(2)(iii).

[52 FR 11429, Apr. 8, 1987, as amended at 52 FR 22780, June 16, 1987]

**Attachment D**
**To Part 70 Operating Permit Renewal No. T129-25424-00003**

[Downloaded from the eCFR on May 21, 2013]

**Electronic Code of Federal Regulations**

**Title 40: Protection of Environment**

**40 CFR 63, Subpart CC—National Emission Standards for Hazardous Air Pollutants From Petroleum Refineries**

Source: 60 FR 43260, Aug. 18, 1995, unless otherwise noted.

**§ 63.640 Applicability and designation of affected source.**

(a) This subpart applies to petroleum refining process units and to related emissions points that are specified in paragraphs (c)(5) through (c)(8) of this section that are located at a plant site and that meet the criteria in paragraphs (a)(1) and (2) of this section:

(1) Are located at a plant site that is a major source as defined in section 112(a) of the Clean Air Act; and

(2) Emit or have equipment containing or contacting one or more of the hazardous air pollutants listed in table 1 of this subpart.

(b)(1) If the predominant use of the flexible operation unit, as described in paragraphs (b)(1)(i) and (ii) of this section, is as a petroleum refining process unit, as defined in § 63.641, then the flexible operation unit shall be subject to the provisions of this subpart.

(i) Except as provided in paragraph (b)(1)(ii) of this section, the predominant use of the flexible operation unit shall be the use representing the greatest annual operating time.

(ii) If the flexible operation unit is used as a petroleum refining process unit and for another purpose equally based on operating time, then the predominant use of the flexible operation unit shall be the use that produces the greatest annual production on a mass basis.

(2) The determination of applicability of this subpart to petroleum refining process units that are designed and operated as flexible operation units shall be reported as specified in § 63.655(h)(6)(i).

(c) For the purposes of this subpart, the affected source shall comprise all emissions points, in combination, listed in paragraphs (c)(1) through (c)(8) of this section that are located at a single refinery plant site.

(1) All miscellaneous process vents from petroleum refining process units meeting the criteria in paragraph (a) of this section;

(2) All storage vessels associated with petroleum refining process units meeting the criteria in paragraph (a) of this section;

(3) All wastewater streams and treatment operations associated with petroleum refining process units meeting the criteria in paragraph (a) of this section;

(4) All equipment leaks from petroleum refining process units meeting the criteria in paragraph (a) of this section;

(5) All gasoline loading racks classified under Standard Industrial Classification code 2911 meeting the criteria in paragraph (a) of this section;

(6) All marine vessel loading operations located at a petroleum refinery meeting the criteria in paragraph (a) of this section and the applicability criteria of subpart Y, § 63.560;

(7) All storage vessels and equipment leaks associated with a bulk gasoline terminal or pipeline breakout station classified under Standard Industrial Classification code 2911 located within a contiguous area and under common control with a refinery meeting the criteria in paragraph (a) of this section; and

(8) All heat exchange systems associated with petroleum refining process units meeting the criteria in paragraph (a) of this section and which are in organic hazardous air pollutants (HAP) service as defined in this subpart.

(d) The affected source subject to this subpart does not include the emission points listed in paragraphs (d)(1) through (d)(5) of this section.

(1) Stormwater from segregated stormwater sewers;

(2) Spills;

(3) Any pump, compressor, pressure relief device, sampling connection system, open-ended valve or line, valve, or instrumentation system that is intended to operate in organic hazardous air pollutant service, as defined in § 63.641 of this subpart, for less than 300 hours during the calendar year;

(4) Catalytic cracking unit and catalytic reformer catalyst regeneration vents, and sulfur plant vents; and

(5) Emission points routed to a fuel gas system, as defined in § 63.641 of this subpart. No testing, monitoring, recordkeeping, or reporting is required for refinery fuel gas systems or emission points routed to refinery fuel gas systems.

(e) The owner or operator of a storage vessel constructed on or before August 18, 1994, shall follow the procedures specified in paragraphs (e)(1) and (e)(2) of this section to determine whether a storage vessel is part of a source to which this subpart applies. The owner or operator of a storage vessel constructed after August 18, 1994, shall follow the procedures specified in paragraphs (e)(1), (e)(2)(i), and (e)(2)(ii) of this section to determine whether a storage vessel is part of a source to which this subpart applies.

(1) Where a storage vessel is used exclusively by a process unit, the storage vessel shall be considered part of that process unit.

(i) If the process unit is a petroleum refining process unit subject to this subpart, then the storage vessel is part of the affected source to which this subpart applies.

(ii) If the process unit is not subject to this subpart, then the storage vessel is not part of the affected source to which this subpart applies.

(2) If a storage vessel is not dedicated to a single process unit, then the applicability of this subpart shall be determined according to the provisions in paragraphs (e)(2)(i) through (e)(2)(iii) of this section.

(i) If a storage vessel is shared among process units and one of the process units has the predominant use, as determined by paragraphs (e)(2)(i)(A) and (e)(2)(i)(B) of this section, then the storage vessel is part of that process unit.

(A) If the greatest input on a volume basis into the storage vessel is from a process unit that is located on the same plant site, then that process unit has the predominant use.

(B) If the greatest input on a volume basis into the storage vessel is provided from a process unit that is not located on the same plant site, then the predominant use shall be the process unit that receives the greatest amount of material on a volume basis from the storage vessel at the same plant site.

(ii) If a storage vessel is shared among process units so that there is no single predominant use, and at least one of those process units is a petroleum refining process unit subject to this subpart, the storage vessel shall be considered to be part of the petroleum refining process unit that is subject to this subpart. If more than one petroleum refining process unit is subject to this subpart, the owner or operator may assign the storage vessel to any of the petroleum refining process units subject to this subpart.

(iii) If the predominant use of a storage vessel varies from year to year, then the applicability of this subpart shall be determined based on the utilization of that storage vessel during the year preceding August 18, 1995. This determination shall be reported as specified in § 63.655(h)(6)(ii).

(f) The owner or operator of a distillation unit constructed on or before August 18, 1994, shall follow the procedures specified in paragraphs (f)(1) through (f)(4) of this section to determine whether a miscellaneous process vent from a distillation unit is part of a source to which this subpart applies. The owner or operator of a distillation unit constructed after August 18, 1994, shall follow the procedures specified in paragraphs (f)(1) through (f)(5) of this section to determine whether a miscellaneous process vent from a distillation unit is part of a source to which this subpart applies.

(1) If the greatest input to the distillation unit is from a process unit located on the same plant site, then the distillation unit shall be assigned to that process unit.

(2) If the greatest input to the distillation unit is provided from a process unit that is not located on the same plant site, then the distillation unit shall be assigned to the process unit located at the same plant site that receives the greatest amount of material from the distillation unit.

(3) If a distillation unit is shared among process units so that there is no single predominant use, as described in paragraphs (f)(1) and (f)(2) of this section, and at least one of those process units is a petroleum refining process unit subject to this subpart, the distillation unit shall be assigned to the petroleum refining process unit that is subject to this subpart. If more than one petroleum refining process unit is subject to this subpart, the owner or operator may assign the distillation unit to any of the petroleum refining process units subject to this rule.

(4) If the process unit to which the distillation unit is assigned is a petroleum refining process unit subject to this subpart and the vent stream contains greater than 20 parts per million by volume total organic hazardous air pollutants, then the vent from the distillation unit is considered a miscellaneous process vent (as defined in § 63.641 of this subpart) and is part of the source to which this subpart applies.

(5) If the predominant use of a distillation unit varies from year to year, then the applicability of this subpart shall be determined based on the utilization of that distillation unit during the year preceding August 18, 1995. This determination shall be reported as specified in § 63.655(h)(6)(iii).

(g) The provisions of this subpart do not apply to the processes specified in paragraphs (g)(1) through (g)(7) of this section.

(1) Research and development facilities, regardless of whether the facilities are located at the same plant site as a petroleum refining process unit that is subject to the provisions of this subpart;

(2) Equipment that does not contain any of the hazardous air pollutants listed in table 1 of this subpart that is located within a petroleum refining process unit that is subject to this subpart;

(3) Units processing natural gas liquids;

(4) Units that are used specifically for recycling discarded oil;

(5) Shale oil extraction units;

(6) Ethylene processes; and

(7) Process units and emission points subject to subparts F, G, H, and I of this part.

(h) Except as provided in paragraphs (k), (l), or (m) of this section, sources subject to this subpart are required to achieve compliance on or before the dates specified in paragraphs (h)(1) through (h)(6) of this section.

(1) Except as provided in paragraphs (h)(1)(i) and (iv) of this section, new sources that commence construction or reconstruction after July 14, 1994, shall be in compliance with this subpart upon initial startup or August 18, 1995, whichever is later.

(i) [Reserved]

(ii) Heat exchange systems at new sources that commence construction or reconstruction after August 18, 1995, but before September 4, 2007, shall comply with the existing source requirements for heat exchange systems specified in § 63.654 no later than October 29, 2012.

(iii) [Reserved]

(iv) Heat exchange systems at new sources that commence construction or reconstruction after September 4, 2007, shall be in compliance with the new source requirements in § 63.654 upon initial startup or October 28, 2009, whichever is later.

(2) Except as provided in paragraphs (h)(3) through (h)(6) of this section, existing sources shall be in compliance with this subpart no later than August 18, 1998, except as provided in § 63.6(c)(5) of subpart A of this part, or unless an extension has been granted by the Administrator as provided in § 63.6(i) of subpart A of this part.

(3) Marine tank vessels at existing sources shall be in compliance with this subpart no later than August 18, 1999 unless the vessels are included in an emissions average to generate emission credits. Marine tank vessels used to generate credits in an emissions average shall be in compliance with this subpart no later than August 18, 1998 unless an extension has been granted by the Administrator as provided in § 63.6(i).

(4) Existing Group 1 floating roof storage vessels shall be in compliance with § 63.646 of this subpart at the first degassing and cleaning activity after August 18, 1998, or August 18, 2005, whichever is first.

(5) An owner or operator may elect to comply with the provisions of § 63.648 (c) through (i) as an alternative to the provisions of § 63.648 (a) and (b). In such cases, the owner or operator shall comply no later than the dates specified in paragraphs (h)(5)(i) through (h)(5)(iii) of this section.

(i) Phase I (see table 2 of this subpart), beginning on August 18, 1998;

(ii) Phase II (see table 2 of this subpart), beginning no later than August 18, 1999; and

(iii) Phase III (see table 2 of this subpart), beginning no later than February 18, 2001.

(6) Heat exchange systems at an existing source shall be in compliance with the existing source standards in § 63.654 no later than October 29, 2012.

(i) If an additional petroleum refining process unit is added to a plant site that is a major source as defined in section 112(a) of the Clean Air Act, the addition shall be subject to the requirements for a new source if it meets the criteria specified in paragraphs (i)(1) through (i)(3) of this section:

(1) It is an addition that meets the definition of construction in § 63.2 of subpart A of this part;

(2) Such construction commenced after July 14, 1994; and

(3) The addition has the potential to emit 10 tons per year or more of any hazardous air pollutant or 25 tons per year or more of any combination of hazardous air pollutants.

(j) If any change is made to a petroleum refining process unit subject to this subpart, the change shall be subject to the requirements for a new source if it meets the criteria specified in paragraphs (j)(1) and (j)(2) of this section:

(1) It is a change that meets the definition of reconstruction in § 63.2 of subpart A of this part; and

(2) Such reconstruction commenced after July 14, 1994.

(k) If an additional petroleum refining process unit is added to a plant site or a change is made to a petroleum refining process unit and the addition or change is determined to be subject to the new source requirements according to paragraphs (i) or (j) of this section it must comply with the requirements specified in paragraphs (k)(1) and (k)(2) of this section:

(1) The reconstructed source, addition, or change shall be in compliance with the new source requirements upon initial startup of the reconstructed source or by August 18, 1995, whichever is later; and

(2) The owner or operator of the reconstructed source, addition, or change shall comply with the reporting and recordkeeping requirements that are applicable to new sources. The applicable reports include, but are not limited to:

(i) The application for approval of construction or reconstruction shall be submitted as soon as practical before the construction or reconstruction is planned to commence (but it need not be sooner than November 16, 1995);

(ii) The Notification of Compliance Status report as required by § 63.655(f) for a new source, addition, or change;

(iii) Periodic Reports and other reports as required by § 63.655(g) and (h);

(iv) Reports and notifications required by § 60.487 of subpart VV of part 60 or § 63.182 of subpart H of this part. The requirements for subpart H are summarized in table 3 of this subpart;

(v) Reports required by 40 CFR 61.357 of subpart FF;

(vi) Reports and notifications required by § 63.428(b), (c), (g)(1), (h)(1) through (h)(3), and (k) of subpart R. These requirements are summarized in table 4 of this subpart; and

(vii) Reports and notifications required by §§ 63.565 and 63.567 of subpart Y of this part. These requirements are summarized in table 5 of this subpart.

(l) If an additional petroleum refining process unit is added to a plant site or if a miscellaneous process vent, storage vessel, gasoline loading rack, marine tank vessel loading operation, or heat exchange system that meets the criteria in paragraphs (c)(1) through (8) of this section is added to an existing petroleum refinery or if another deliberate operational process change creating an additional Group 1 emissions point(s) (as defined in § 63.641) is made to an existing petroleum refining process unit, and if the addition or process change is not subject to the new source requirements as determined according to paragraphs (i) or (j) of this section, the requirements in paragraphs (l)(1) through (3) of this section shall apply. Examples of process changes include, but are not limited to, changes in production capacity, or feed or raw material where the change requires construction or physical alteration of the existing equipment or catalyst type, or whenever there is replacement, removal, or addition of recovery equipment. For purposes of this paragraph and paragraph (m) of this section, process changes do not include: Process upsets, unintentional temporary process changes, and changes that are within the equipment configuration and operating conditions documented in the Notification of Compliance Status report required by § 63.655(f).

(1) The added emission point(s) and any emission point(s) within the added or changed petroleum refining process unit are subject to the requirements for an existing source.

(2) The added emission point(s) and any emission point(s) within the added or changed petroleum refining process unit shall be in compliance with this subpart by the dates specified in paragraphs (l)(2)(i) or (l)(2)(ii) of this section, as applicable.

(i) If a petroleum refining process unit is added to a plant site or an emission point(s) is added to any existing petroleum refining process unit, the added emission point(s) shall be in compliance upon initial startup of any added petroleum refining process unit or emission point(s) or by August 18, 1998, whichever is later.

(ii) If a deliberate operational process change to an existing petroleum refining process unit causes a Group 2 emission point to become a Group 1 emission point (as defined in § 63.641), the owner or operator shall be in compliance upon initial startup or by August 18, 1998, whichever is later, unless the owner or operator demonstrates to the Administrator that achieving compliance will take longer than making the change. If this demonstration is made to the Administrator's satisfaction, the owner or operator shall follow the procedures in paragraphs (m)(1) through (m)(3) of this section to establish a compliance date.

(3) The owner or operator of a petroleum refining process unit or of a storage vessel, miscellaneous process vent, wastewater stream, gasoline loading rack, marine tank vessel loading operation, or heat exchange system meeting the criteria in paragraphs (c)(1) through (8) of this section that is added to a plant site and is subject to the requirements for existing sources shall comply with the reporting and recordkeeping requirements that are applicable to existing sources including, but not limited to, the reports listed in paragraphs (l)(3)(i) through (vii) of this section. A process change to an existing petroleum refining process unit shall be subject to the reporting requirements for existing sources including, but not limited to, the reports listed in paragraphs (l)(3)(i) through (l)(3)(vii) of this section. The applicable reports include, but are not limited to:

(i) The Notification of Compliance Status report as required by § 63.655(f) for the emission points that were added or changed;

(ii) Periodic Reports and other reports as required by § 63.655(g) and (h);

(iii) Reports and notifications required by sections of subpart A of this part that are applicable to this subpart, as identified in table 6 of this subpart.

(iv) Reports and notifications required by § 63.182, or 40 CFR 60.487. The requirements of subpart H of this part are summarized in table 3 of this subpart;

(v) Reports required by § 61.357 of subpart FF;

(vi) Reports and notifications required by § 63.428(b), (c), (g)(1), (h)(1) through (h)(3), and (k) of subpart R. These requirements are summarized in table 4 of this subpart; and

(vii) Reports and notifications required by §§ 63.565 and 63.567 of subpart Y. These requirements are summarized in table 5 of this subpart.

(4) If pumps, compressors, pressure relief devices, sampling connection systems, open-ended valves or lines, valves, or instrumentation systems are added to an existing source, they are subject to the equipment leak standards for existing sources in § 63.648. A notification of compliance status report shall not be required for such added equipment.

(m) If a change that does not meet the criteria in paragraph (l) of this section is made to a petroleum refining process unit subject to this subpart, and the change causes a Group 2 emission point to become a Group 1 emission point (as defined in § 63.641), then the owner or operator shall comply with the requirements of this subpart for existing sources for the Group 1 emission point as expeditiously as practicable, but in no event later than 3 years after the emission point becomes Group 1.

(1) The owner or operator shall submit to the Administrator for approval a compliance schedule, along with a justification for the schedule.

(2) The compliance schedule shall be submitted within 180 days after the change is made, unless the compliance schedule has been previously submitted to the permitting authority. If it is not possible to determine until after the change is implemented whether the emission point has become Group 1, the compliance schedule shall be submitted within 180 days of the date when the affect of the change is known to the source. The compliance schedule may be

submitted in the next Periodic Report if the change is made after the date the Notification of Compliance Status report is due.

(3) The Administrator shall approve or deny the compliance schedule or request changes within 120 calendar days of receipt of the compliance schedule and justification. Approval is automatic if not received from the Administrator within 120 calendar days of receipt.

(n) Overlap of subpart CC with other regulations for storage vessels.

(1) After the compliance dates specified in paragraph (h) of this section, a Group 1 or Group 2 storage vessel that is part of an existing source and is also subject to the provisions of 40 CFR part 60, subpart Kb, is required to comply only with the requirements of 40 CFR part 60, subpart Kb, except as provided in paragraph (n)(8) of this section.

(2) After the compliance dates specified in paragraph (h) of this section a Group 1 storage vessel that is part of a new source and is subject to 40 CFR part 60, subpart Kb is required to comply only with this subpart.

(3) After the compliance dates specified in paragraph (h) of this section, a Group 2 storage vessel that is part of a new source and is subject to the control requirements in § 60.112b of 40 CFR part 60, subpart Kb is required to comply only with 40 CFR part 60, subpart Kb except as provided in paragraph (n)(8) of this section.

(4) After the compliance dates specified in paragraph (h) of this section, a Group 2 storage vessel that is part of a new source and is subject to 40 CFR 60.110b, but is not required to apply controls by 40 CFR 60.110b or 60.112b is required to comply only with this subpart.

(5) After the compliance dates specified in paragraph (h) of this section a Group 1 storage vessel that is also subject to the provisions of 40 CFR part 60, subparts K or Ka is required to only comply with the provisions of this subpart.

(6) After compliance dates specified in paragraph (h) of this section, a Group 2 storage vessel that is subject to the control requirements of 40 CFR part 60, subparts K or Ka is required to comply only with the provisions of 40 CFR part 60, subparts K or Ka except as provided for in paragraph (n)(9) of this section.

(7) After the compliance dates specified in paragraph (h) of this section, a Group 2 storage vessel that is subject to 40 CFR part 60, subparts K or Ka, but not to the control requirements of 40 CFR part 60, subparts K or Ka, is required to comply only with this subpart.

(8) Storage vessels described by paragraphs (n)(1) and (n)(3) of this section are to comply with 40 CFR part 60, subpart Kb except as provided for in paragraphs (n)(8)(i) through (n)(8)(vi) of this section.

(i) Storage vessels that are to comply with § 60.112b(a)(2) of subpart Kb are exempt from the secondary seal requirements of § 60.112b(a)(2)(i)(B) during the gap measurements for the primary seal required by § 60.113b(b) of subpart Kb.

(ii) If the owner or operator determines that it is unsafe to perform the seal gap measurements required in § 60.113b(b) of subpart Kb or to inspect the vessel to determine compliance with § 60.113b(a) of subpart Kb because the roof appears to be structurally unsound and poses an imminent danger to inspecting personnel, the owner or operator shall comply with the requirements in either § 63.120(b)(7)(i) or § 63.120(b)(7)(ii) of subpart G.

(iii) If a failure is detected during the inspections required by § 60.113b(a)(2) or during the seal gap measurements required by § 60.113b(b)(1), and the vessel cannot be repaired within 45 days and the vessel cannot be emptied within 45 days, the owner or operator may utilize up to two extensions of up to 30 additional calendar days each. The owner or operator is not required to provide a request for the extension to the Administrator.

(iv) If an extension is utilized in accordance with paragraph (n)(8)(iii) of this section, the owner or operator shall, in the next periodic report, identify the vessel, provide the information listed in § 60.113b(a)(2) or § 60.113b(b)(4)(iii), and describe the nature and date of the repair made or provide the date the storage vessel was emptied.

(v) Owners and operators of storage vessels complying with subpart Kb of part 60 may submit the inspection reports required by §§ 60.115b(a)(3), (a)(4), and (b)(4) of subpart Kb as part of the periodic reports required by this subpart, rather than within the 30-day period specified in §§ 60.115b(a)(3), (a)(4), and (b)(4) of subpart Kb.

(vi) The reports of rim seal inspections specified in § 60.115b(b)(2) are not required if none of the measured gaps or calculated gap areas exceed the limitations specified in § 60.113b(b)(4). Documentation of the inspections shall be recorded as specified in § 60.115b(b)(3).

(9) Storage vessels described by paragraph (n)(6) of this section that are to comply with 40 CFR part 60, subpart Ka, are to comply with only subpart Ka except as provided for in paragraphs (n)(9)(i) through (n)(9)(iv) of this section.

(i) If the owner or operator determines that it is unsafe to perform the seal gap measurements required in § 60.113a(a)(1) of subpart Ka because the floating roof appears to be structurally unsound and poses an imminent danger to inspecting personnel, the owner or operator shall comply with the requirements in either § 63.120(b)(7)(i) or § 63.120(b)(7)(ii) of subpart G.

(ii) If a failure is detected during the seal gap measurements required by § 60.113a(a)(1) of subpart Ka, and the vessel cannot be repaired within 45 days and the vessel cannot be emptied within 45 days, the owner or operator may utilize up to 2 extensions of up to 30 additional calendar days each.

(iii) If an extension is utilized in accordance with paragraph (n)(9)(ii) of this section, the owner or operator shall, in the next periodic report, identify the vessel, describe the nature and date of the repair made or provide the date the storage vessel was emptied. The owner or operator shall also provide documentation of the decision to utilize an extension including a description of the failure, documentation that alternate storage capacity is unavailable, and a schedule of actions that will ensure that the control equipment will be repaired or the vessel emptied as soon as possible.

(iv) Owners and operators of storage vessels complying with subpart Ka of part 60 may submit the inspection reports required by § 60.113a(a)(1)(i)(E) of subpart Ka as part of the periodic reports required by this subpart, rather than within the 60-day period specified in § 60.113a(a)(1)(i)(E) of subpart Ka.

(o) Overlap of this subpart CC with other regulations for wastewater.

(1) After the compliance dates specified in paragraph (h) of this section a Group 1 wastewater stream managed in a piece of equipment that is also subject to the provisions of 40 CFR part 60, subpart QQQ is required to comply only with this subpart.

(2) After the compliance dates specified in paragraph (h) of this section a Group 1 or Group 2 wastewater stream that is conveyed, stored, or treated in a wastewater stream management unit that also receives streams subject to the provisions of §§ 63.133 through 63.147 of subpart G wastewater provisions of this part shall comply as specified in paragraph (o)(2)(i) or (o)(2)(ii) of this section. Compliance with the provisions of paragraph (o)(2) of this section shall constitute compliance with the requirements of this subpart for that wastewater stream.

(i) Comply with paragraphs (o)(2)(i)(A) through (o)(2)(i)(C) of this section.

(A) The provisions in §§ 63.133 through 63.140 of subpart G for all equipment used in the storage and conveyance of the Group 1 or Group 2 wastewater stream.

(B) The provisions in both 40 CFR part 61, subpart FF and in §§ 63.138 and 63.139 of subpart G for the treatment and control of the Group 1 or Group 2 wastewater stream.

(C) The provisions in §§ 63.143 through 63.148 of subpart G for monitoring and inspections of equipment and for recordkeeping and reporting requirements. The owner or operator is not required to comply with the monitoring, recordkeeping, and reporting requirements associated with the treatment and control requirements in 40 CFR part 61, subpart FF, §§ 61.355 through 61.357.

(ii) Comply with paragraphs (o)(2)(ii)(A) and (o)(2)(ii)(B) of this section.

(A) Comply with the provisions of §§ 63.133 through 63.148 and §§ 63.151 and 63.152 of subpart G.

(B) For any Group 2 wastewater stream or organic stream whose benzene emissions are subject to control through the use of one or more treatment processes or waste management units under the provisions of 40 CFR part 61, subpart FF on or after December 31, 1992, comply with the requirements of § 63.133 through § 63.147 of subpart G for Group 1 wastewater streams.

(p) Overlap of subpart CC with other regulations for equipment leaks.

(1) After the compliance dates specified in paragraph (h) of this section, equipment leaks that are also subject to the provisions of 40 CFR parts 60 and 61 standards promulgated before September 4, 2007, are required to comply only with the provisions specified in this subpart.

(2) Equipment leaks that are also subject to the provisions of 40 CFR part 60, subpart GGGa, are required to comply only with the provisions specified in 40 CFR part 60, subpart GGGa.

(q) For overlap of subpart CC with local or State regulations, the permitting authority for the affected source may allow consolidation of the monitoring, recordkeeping, and reporting requirements under this subpart with the monitoring, recordkeeping, and reporting requirements under other applicable requirements in 40 CFR parts 60, 61, or 63, and in any 40 CFR part 52 approved State implementation plan provided the implementation plan allows for approval of alternative monitoring, reporting, or recordkeeping requirements and provided that the permit contains an equivalent degree of compliance and control.

(r) Overlap of subpart CC with other regulations for gasoline loading racks. After the compliance dates specified in paragraph (h) of this section, a Group 1 gasoline loading rack that is part of a source subject to subpart CC and also is subject to the provisions of 40 CFR part 60, subpart XX is required to comply only with this subpart.

[60 FR 43260, Aug. 18, 1995; 61 FR 7051, Feb. 23, 1996, as amended at 61 FR 29878, June 12, 1996; 63 FR 44140, Aug. 18, 1998; 66 FR 28841, May 25, 2001; 74 FR 55683, Oct. 28, 2009]

**§ 63.641 Definitions.**

All terms used in this subpart shall have the meaning given them in the Clean Air Act, subpart A of this part, and in this section. If the same term is defined in subpart A and in this section, it shall have the meaning given in this section for purposes of this subpart.

*Affected source* means the collection of emission points to which this subpart applies as determined by the criteria in § 63.640.

*Aliphatic* means open-chained structure consisting of paraffin, olefin and acetylene hydrocarbons and derivatives.

*Annual average true vapor pressure* means the equilibrium partial pressure exerted by the stored liquid at the temperature equal to the annual average of the liquid storage temperature for liquids stored above or below the ambient temperature or at the local annual average temperature reported by the National Weather Service for liquids stored at the ambient temperature, as determined:

(1) In accordance with methods specified in § 63.111 of subpart G of this part;

(2) From standard reference texts; or

(3) By any other method approved by the Administrator.

*Boiler* means any enclosed combustion device that extracts useful energy in the form of steam and is not an incinerator.

*By compound* means by individual stream components, not by carbon equivalents.

*Car-seal* means a seal that is placed on a device that is used to change the position of a valve (e.g., from opened to closed) in such a way that the position of the valve cannot be changed without breaking the seal.

*Closed vent system* means a system that is not open to the atmosphere and is configured of piping, ductwork, connections, and, if necessary, flow inducing devices that transport gas or vapor from an emission point to a control device or back into the process. If gas or vapor from regulated equipment is routed to a process (e.g., to a petroleum refinery fuel gas system), the process shall not be considered a closed vent system and is not subject to closed vent system standards.

*Combustion device* means an individual unit of equipment such as a flare, incinerator, process heater, or boiler used for the combustion of organic hazardous air pollutant vapors.

*Connector* means flanged, screwed, or other joined fittings used to connect two pipe lines or a pipe line and a piece of equipment. A common connector is a flange. Joined fittings welded completely around the circumference of the interface are not considered connectors for the purpose of this regulation. For the purpose of reporting and recordkeeping, connector means joined fittings that are accessible.

*Continuous record* means documentation, either in hard copy or computer readable form, of data values measured at least once every hour and recorded at the frequency specified in § 63.655(i).

*Continuous recorder* means a data recording device recording an instantaneous data value or an average data value at least once every hour.

*Control device* means any equipment used for recovering, removing, or oxidizing organic hazardous air pollutants. Such equipment includes, but is not limited to, absorbers, carbon adsorbers, condensers, incinerators, flares, boilers, and process heaters. For miscellaneous process vents (as defined in this section), recovery devices (as defined in this section) are not considered control devices.

*Cooling tower* means a heat removal device used to remove the heat absorbed in circulating cooling water systems by transferring the heat to the atmosphere using natural or mechanical draft.

*Cooling tower return line* means the main water trunk lines at the inlet to the cooling tower before exposure to the atmosphere.

*Delayed coker vent* means a vent that is typically intermittent in nature, and usually occurs only during the initiation of the depressuring cycle of the decoking operation when vapor from the coke drums cannot be sent to the fractionator column for product recovery, but instead is routed to the atmosphere through a closed blowdown system or directly to the atmosphere in an open blowdown system. The emissions from the decoking phases of delayed coker operations, which include coke drum deheading, draining, or decoking (coke cutting), are not considered to be delayed coker vents.

*Distillate receiver* means overhead receivers, overhead accumulators, reflux drums, and condenser(s) including ejector-condenser(s) associated with a distillation unit.

*Distillation unit* means a device or vessel in which one or more feed streams are separated into two or more exit streams, each exit stream having component concentrations different from those in the feed stream(s). The separation is achieved by the redistribution of the components between the liquid and the vapor phases by vaporization and condensation as they approach equilibrium within the distillation unit. Distillation unit includes the distillate receiver, reboiler, and any associated vacuum pump or steam jet.

*Emission point* means an individual miscellaneous process vent, storage vessel, wastewater stream, or equipment leak associated with a petroleum refining process unit; an individual storage vessel or equipment leak associated with a bulk gasoline terminal or pipeline breakout station classified under Standard Industrial Classification code 2911; a gasoline loading rack classified under Standard Industrial Classification code 2911; or a marine tank vessel loading operation located at a petroleum refinery.

*Equipment leak* means emissions of organic hazardous air pollutants from a pump, compressor, pressure relief device, sampling connection system, open-ended valve or line, valve, or instrumentation system “in organic

hazardous air pollutant service" as defined in this section. Vents from wastewater collection and conveyance systems (including, but not limited to wastewater drains, sewer vents, and sump drains), tank mixers, and sample valves on storage tanks are not equipment leaks.

*Flame zone* means the portion of a combustion chamber of a boiler or process heater occupied by the flame envelope created by the primary fuel.

*Flexible operation unit* means a process unit that manufactures different products periodically by alternating raw materials or operating conditions. These units are also referred to as campaign plants or blocked operations.

*Flow indicator* means a device that indicates whether gas is flowing, or whether the valve position would allow gas to flow, in a line.

*Fuel gas system* means the offsite and onsite piping and control system that gathers gaseous streams generated by refinery operations, may blend them with sources of gas, if available, and transports the blended gaseous fuel at suitable pressures for use as fuel in heaters, furnaces, boilers, incinerators, gas turbines, and other combustion devices located within or outside of the refinery. The fuel is piped directly to each individual combustion device, and the system typically operates at pressures over atmospheric. The gaseous streams can contain a mixture of methane, light hydrocarbons, hydrogen and other miscellaneous species.

*Gasoline* means any petroleum distillate or petroleum distillate/alcohol blend having a Reid vapor pressure of 27.6 kilopascals or greater that is used as a fuel for internal combustion engines.

*Gasoline loading rack* means the loading arms, pumps, meters, shutoff valves, relief valves, and other piping and valves necessary to fill gasoline cargo tanks.

*Group 1 gasoline loading rack* means any gasoline loading rack classified under Standard Industrial Classification code 2911 that is located within a bulk gasoline terminal that has a gasoline throughput greater than 75,700 liters per day. Gasoline throughput shall be the maximum calculated design throughput for the terminal as may be limited by compliance with enforceable conditions under Federal, State, or local law and discovered by the Administrator and any other person.

*Group 1 marine tank vessel* means a vessel at an existing source loaded at any land- or sea-based terminal or structure that loads liquid commodities with vapor pressures greater than or equal to 10.3 kilopascals in bulk onto marine tank vessels, that emits greater than 9.1 megagrams of any individual HAP or 22.7 megagrams of any combination of HAP annually after August 18, 1999, or a vessel at a new source loaded at any land- or sea-based terminal or structure that loads liquid commodities with vapor pressures greater than or equal to 10.3 kilopascals onto marine tank vessels.

*Group 1 miscellaneous process vent* means a miscellaneous process vent for which the total organic HAP concentration is greater than or equal to 20 parts per million by volume, and the total volatile organic compound emissions are greater than or equal to 33 kilograms per day for existing sources and 6.8 kilograms per day for new sources at the outlet of the final recovery device (if any) and prior to any control device and prior to discharge to the atmosphere.

*Group 1 storage vessel* means a storage vessel at an existing source that has a design capacity greater than or equal to 177 cubic meters and stored-liquid maximum true vapor pressure greater than or equal to 10.4 kilopascals and stored-liquid annual average true vapor pressure greater than or equal to 8.3 kilopascals and annual average HAP liquid concentration greater than 4 percent by weight total organic HAP; a storage vessel at a new source that has a design storage capacity greater than or equal to 151 cubic meters and stored-liquid maximum true vapor pressure greater than or equal to 3.4 kilopascals and annual average HAP liquid concentration greater than 2 percent by weight total organic HAP; or a storage vessel at a new source that has a design storage capacity greater than or equal to 76 cubic meters and less than 151 cubic meters and stored-liquid maximum true vapor pressure greater than or equal to 77 kilopascals and annual average HAP liquid concentration greater than 2 percent by weight total organic HAP.

*Group 1 wastewater stream* means a wastewater stream at a petroleum refinery with a total annual benzene loading of 10 megagrams per year or greater as calculated according to the procedures in 40 CFR 61.342 of subpart FF of

part 61 that has a flow rate of 0.02 liters per minute or greater, a benzene concentration of 10 parts per million by weight or greater, and is not exempt from control requirements under the provisions of 40 CFR part 61, subpart FF.

*Group 2 gasoline loading rack* means a gasoline loading rack classified under Standard Industrial Classification code 2911 that does not meet the definition of a Group 1 gasoline loading rack.

*Group 2 marine tank vessel* means a marine tank vessel that does not meet the definition of a Group 1 marine tank vessel.

*Group 2 miscellaneous process vent* means a miscellaneous process vent that does not meet the definition of a Group 1 miscellaneous process vent.

*Group 2 storage vessel* means a storage vessel that does not meet the definition of a Group 1 storage vessel.

*Group 2 wastewater stream* means a wastewater stream that does not meet the definition of Group 1 wastewater stream.

*Hazardous air pollutant* or *HAP* means one of the chemicals listed in section 112(b) of the Clean Air Act.

*Heat exchange system* means a device or series of devices used to transfer heat from process fluids to water without intentional direct contact of the process fluid with the water ( *i.e.,* non-contact heat exchanger) and to transport and/or cool the water in a closed-loop recirculation system (cooling tower system) or a once-through system ( *e.g.,* river or pond water). For closed-loop recirculation systems, the *heat exchange system* consists of a cooling tower, all heat exchangers that are serviced by that cooling tower, and all water lines to and from the heat exchanger(s). For once-through systems, the *heat exchange system* consists of one or more heat exchangers servicing an individual process unit and all water lines to and from the heat exchanger(s). Intentional direct contact with process fluids results in the formation of a wastewater.

*Heat exchanger exit line* means the cooling water line from the exit of one or more heat exchangers (where cooling water leaves the heat exchangers) to either the entrance of the cooling tower return line or prior to exposure to the atmosphere, in, as an example, a once-through cooling system, whichever occurs first.

*Incinerator* means an enclosed combustion device that is used for destroying organic compounds. Auxiliary fuel may be used to heat waste gas to combustion temperatures. Any energy recovery section present is not physically formed into one manufactured or assembled unit with the combustion section; rather, the energy recovery section is a separate section following the combustion section and the two are joined by ducts or connections carrying flue gas.

*In heavy liquid service* means that the piece of equipment is not in gas/vapor service or in light liquid service.

*In light liquid service* means that the piece of equipment contains a liquid that meets the conditions specified in § 60.593(d) of part 60, subpart GGG.

*In organic hazardous air pollutant service* means that a piece of equipment either contains or contacts a fluid (liquid or gas) that is at least 5 percent by weight of total organic HAP's as determined according to the provisions of § 63.180(d) of subpart H of this part and table 1 of this subpart. The provisions of § 63.180(d) of subpart H also specify how to determine that a piece of equipment is not in organic HAP service.

*Leakless valve* means a valve that has no external actuating mechanism.

*Maximum true vapor pressure* means the equilibrium partial pressure exerted by the stored liquid at the temperature equal to the highest calendar-month average of the liquid storage temperature for liquids stored above or below the ambient temperature or at the local maximum monthly average temperature as reported by the National Weather Service for liquids stored at the ambient temperature, as determined:

(1) In accordance with methods specified in § 63.111 of subpart G of this part;

(2) From standard reference texts; or

(3) By any other method approved by the Administrator.

*Miscellaneous process vent* means a gas stream containing greater than 20 parts per million by volume organic HAP that is continuously or periodically discharged during normal operation of a petroleum refining process unit meeting the criteria specified in § 63.640(a). Miscellaneous process vents include gas streams that are discharged directly to the atmosphere, gas streams that are routed to a control device prior to discharge to the atmosphere, or gas streams that are diverted through a product recovery device prior to control or discharge to the atmosphere. Miscellaneous process vents include vent streams from: caustic wash accumulators, distillation tower condensers/accumulators, flash/knockout drums, reactor vessels, scrubber overheads, stripper overheads, vacuum (steam) ejectors, wash tower overheads, water wash accumulators, blowdown condensers/accumulators, and delayed coker vents. Miscellaneous process vents do not include:

(1) Gaseous streams routed to a fuel gas system;

(2) Relief valve discharges;

(3) Leaks from equipment regulated under § 63.648;

(4) Episodic or nonroutine releases such as those associated with startup, shutdown, malfunction, maintenance, depressuring, and catalyst transfer operations;

(5) In situ sampling systems (onstream analyzers);

(6) Catalytic cracking unit catalyst regeneration vents;

(7) Catalytic reformer regeneration vents;

(8) Sulfur plant vents;

(9) Vents from control devices such as scrubbers, boilers, incinerators, and electrostatic precipitators applied to catalytic cracking unit catalyst regeneration vents, catalytic reformer regeneration vents, and sulfur plant vents;

(10) Vents from any stripping operations applied to comply with the wastewater provisions of this subpart, subpart G of this part, or 40 CFR part 61, subpart FF;

(11) Coking unit vents associated with coke drum depressuring at or below a coke drum outlet pressure of 15 pounds per square inch gauge, deheading, draining, or decoking (coke cutting) or pressure testing after decoking;

(12) Vents from storage vessels;

(13) Emissions from wastewater collection and conveyance systems including, but not limited to, wastewater drains, sewer vents, and sump drains; and

(14) Hydrogen production plant vents through which carbon dioxide is removed from process streams or through which steam condensate produced or treated within the hydrogen plant is degassed or deaerated.

*Operating permit* means a permit required by 40 CFR parts 70 or 71.

*Organic hazardous air pollutant* or *organic HAP* in this subpart, means any of the organic chemicals listed in table 1 of this subpart.

*Petroleum-based solvents* means mixtures of aliphatic hydrocarbons or mixtures of one and two ring aromatic hydrocarbons.

*Periodically discharged* means discharges that are intermittent and associated with routine operations. Discharges associated with maintenance activities or process upsets are not considered periodically discharged miscellaneous process vents and are therefore not regulated by the petroleum refinery miscellaneous process vent provisions.

*Petroleum refining process unit* means a process unit used in an establishment primarily engaged in petroleum refining as defined in the Standard Industrial Classification code for petroleum refining (2911), and used primarily for the following:

(1) Producing transportation fuels (such as gasoline, diesel fuels, and jet fuels), heating fuels (such as kerosene, fuel gas distillate, and fuel oils), or lubricants;

(2) Separating petroleum; or

(3) Separating, cracking, reacting, or reforming intermediate petroleum streams.

(4) Examples of such units include, but are not limited to, petroleum-based solvent units, alkylation units, catalytic hydrotreating, catalytic hydrorefining, catalytic hydrocracking, catalytic reforming, catalytic cracking, crude distillation, lube oil processing, hydrogen production, isomerization, polymerization, thermal processes, and blending, sweetening, and treating processes. Petroleum refining process units also include sulfur plants.

*Plant site* means all contiguous or adjoining property that is under common control including properties that are separated only by a road or other public right-of-way. Common control includes properties that are owned, leased, or operated by the same entity, parent entity, subsidiary, or any combination thereof.

*Primary fuel* means the fuel that provides the principal heat input (i.e., more than 50 percent) to the device. To be considered primary, the fuel must be able to sustain operation without the addition of other fuels.

*Process heater* means an enclosed combustion device that primarily transfers heat liberated by burning fuel directly to process streams or to heat transfer liquids other than water.

*Process unit* means the equipment assembled and connected by pipes or ducts to process raw and/or intermediate materials and to manufacture an intended product. A process unit includes any associated storage vessels. For the purpose of this subpart, process unit includes, but is not limited to, chemical manufacturing process units and petroleum refining process units.

*Process unit shutdown* means a work practice or operational procedure that stops production from a process unit or part of a process unit during which it is technically feasible to clear process material from a process unit or part of a process unit consistent with safety constraints and during which repairs can be accomplished. An unscheduled work practice or operational procedure that stops production from a process unit or part of a process unit for less than 24 hours is not considered a process unit shutdown. An unscheduled work practice or operational procedure that would stop production from a process unit or part of a process unit for a shorter period of time than would be required to clear the process unit or part of the process unit of materials and start up the unit, or would result in greater emissions than delay of repair of leaking components until the next scheduled process unit shutdown is not considered a process unit shutdown. The use of spare equipment and technically feasible bypassing of equipment without stopping production are not considered process unit shutdowns.

*Recovery device* means an individual unit of equipment capable of and used for the purpose of recovering chemicals for use, reuse, or sale. Recovery devices include, but are not limited to, absorbers, carbon adsorbers, and condensers.

*Reference control technology for gasoline loading racks* means a vapor collection and processing system used to reduce emissions due to the loading of gasoline cargo tanks to 10 milligrams of total organic compounds per liter of gasoline loaded or less.

*Reference control technology for marine vessels* means a vapor collection system and a control device that reduces captured HAP emissions by 97 percent.

*Reference control technology for miscellaneous process vents* means a combustion device used to reduce organic HAP emissions by 98 percent, or to an outlet concentration of 20 parts per million by volume.

*Reference control technology for storage vessels* means either:

(1) An internal floating roof meeting the specifications of § 63.119(b) of subpart G except for § 63.119 (b)(5) and (b)(6);

(2) An external floating roof meeting the specifications of § 63.119(c) of subpart G except for § 63.119(c)(2);

(3) An external floating roof converted to an internal floating roof meeting the specifications of § 63.119(d) of subpart G except for § 63.119(d)(2); or

(4) A closed-vent system to a control device that reduces organic HAP emissions by 95-percent, or to an outlet concentration of 20 parts per million by volume.

(5) For purposes of emissions averaging, these four technologies are considered equivalent.

*Reference control technology for wastewater* means the use of:

(1) Controls specified in §§ 61.343 through 61.347 of subpart FF of part 61;

(2) A treatment process that achieves the emission reductions specified in table 7 of this subpart for each individual HAP present in the wastewater stream or is a steam stripper that meets the specifications in § 63.138(g) of subpart G of this part; and

(3) A control device to reduce by 95 percent (or to an outlet concentration of 20 parts per million by volume for combustion devices) the organic HAP emissions in the vapor streams vented from treatment processes (including the steam stripper described in paragraph (2) of this definition) managing wastewater.

*Refinery fuel gas* means a gaseous mixture of methane, light hydrocarbons, hydrogen, and other miscellaneous species (nitrogen, carbon dioxide, hydrogen sulfide, etc.) that is produced in the refining of crude oil and/or petrochemical processes and that is separated for use as a fuel in boilers and process heaters throughout the refinery.

*Relief valve* means a valve used only to release an unplanned, nonroutine discharge. A relief valve discharge can result from an operator error, a malfunction such as a power failure or equipment failure, or other unexpected cause that requires immediate venting of gas from process equipment in order to avoid safety hazards or equipment damage.

*Research and development facility* means laboratory and pilot plant operations whose primary purpose is to conduct research and development into new processes and products, where the operations are under the close supervision of technically trained personnel, and is not engaged in the manufacture of products for commercial sale, except in a de minimis manner.

*Shutdown* means the cessation of a petroleum refining process unit or a unit operation (including, but not limited to, a distillation unit or reactor) within a petroleum refining process unit for purposes including, but not limited to, periodic maintenance, replacement of equipment, or repair.

*Startup* means the setting into operation of a petroleum refining process unit for purposes of production. Startup does not include operation solely for purposes of testing equipment. Startup does not include changes in product for flexible operation units.

*Storage vessel* means a tank or other vessel that is used to store organic liquids. Storage vessel does not include:

(1) Vessels permanently attached to motor vehicles such as trucks, railcars, barges, or ships;

(2) Pressure vessels designed to operate in excess of 204.9 kilopascals and without emissions to the atmosphere;

(3) Vessels with capacities smaller than 40 cubic meters;

(4) Bottoms receiver tanks; or

(5) Wastewater storage tanks. Wastewater storage tanks are covered under the wastewater provisions.

*Temperature monitoring device* means a unit of equipment used to monitor temperature and having an accuracy of ±1 percent of the temperature being monitored expressed in degrees Celsius or ±0.5 °C, whichever is greater.

*Total annual benzene* means the total amount of benzene in waste streams at a facility on an annual basis as determined in § 61.342 of 40 CFR part 61, subpart FF.

*Total organic compounds* or *TOC,* as used in this subpart, means those compounds excluding methane and ethane measured according to the procedures of Method 18 of 40 CFR part 60, appendix A. Method 25A may be used alone or in combination with Method 18 to measure TOC as provided in § 63.645 of this subpart.

*Wastewater* means water or wastewater that, during production or processing, comes into direct contact with or results from the production or use of any raw material, intermediate product, finished product, byproduct, or waste product and is discharged into any individual drain system. Examples are feed tank drawdown; water formed during a chemical reaction or used as a reactant; water used to wash impurities from organic products or reactants; water used to cool or quench organic vapor streams through direct contact; and condensed steam from jet ejector systems pulling vacuum on vessels containing organics.

[60 FR 43260, Aug. 18, 1995, as amended at 61 FR 29879, June 12, 1996; 62 FR 7938, Feb. 21, 1997; 63 FR 31361, June 9, 1998; 63 FR 44141, Aug. 18, 1998; 74 FR 55685, Oct. 28, 2008]

**§ 63.642 General standards.**

(a) Each owner or operator of a source subject to this subpart is required to apply for a part 70 or part 71 operating permit from the appropriate permitting authority. If the EPA has approved a State operating permit program under part 70, the permit shall be obtained from the State authority. If the State operating permit program has not been approved, the source shall apply to the EPA Regional Office pursuant to part 71.

(b) [Reserved]

(c) Table 6 of this subpart specifies the provisions of subpart A of this part that apply and those that do not apply to owners and operators of sources subject to this subpart.

(d) Initial performance tests and initial compliance determinations shall be required only as specified in this subpart.

(1) Performance tests and compliance determinations shall be conducted according to the schedule and procedures specified in this subpart.

(2) The owner or operator shall notify the Administrator of the intention to conduct a performance test at least 30 days before the performance test is scheduled.

(3) Performance tests shall be conducted according to the provisions of § 63.7(e) except that performance tests shall be conducted at maximum representative operating capacity for the process. During the performance test, an owner or operator shall operate the control device at either maximum or minimum representative operating conditions for monitored control device parameters, whichever results in lower emission reduction.

(4) Data shall be reduced in accordance with the EPA-approved methods specified in the applicable section or, if other test methods are used, the data and methods shall be validated according to the protocol in Method 301 of appendix A of this part.

(e) Each owner or operator of a source subject to this subpart shall keep copies of all applicable reports and records required by this subpart for at least 5 years except as otherwise specified in this subpart. All applicable records shall be maintained in such a manner that they can be readily accessed within 24 hours. Records may be maintained in hard copy or computer-readable form including, but not limited to, on paper, microfilm, computer, floppy disk, magnetic tape, or microfiche.

(f) All reports required under this subpart shall be sent to the Administrator at the addresses listed in § 63.13 of subpart A of this part. If acceptable to both the Administrator and the owner or operator of a source, reports may be submitted on electronic media.

(g) The owner or operator of an existing source subject to the requirements of this subpart shall control emissions of organic HAP's to the level represented by the following equation:

$E_A = 0.02\Sigma\ EPV_1 + \Sigma\ EPV_2 + 0.05\Sigma\ ES_1 + \Sigma\ ES_2 + \Sigma\ EGLR_{1C} + \Sigma\ EGLR_2 + (R)\ \Sigma\ EMV_1 + \Sigma\ EMV_2 + \Sigma\ EWW_{1C} + \Sigma\ EWW_2$

where:

$E_A$ = Emission rate, megagrams per year, allowed for the source.

$0.02\Sigma\ EPV_1$ = Sum of the residual emissions, megagrams per year, from all Group 1 miscellaneous process vents, as defined in § 63.641.

$\Sigma\ EPV_2$ = Sum of the emissions, megagrams per year, from all Group 2 process vents, as defined in § 63.641.

$0.05\Sigma\ ES_1$ = Sum of the residual emissions, megagrams per year, from all Group 1 storage vessels, as defined in § 63.641.

$\Sigma\ ES_2$ = Sum of the emissions, megagrams per year, from all Group 2 storage vessels, as defined in § 63.641.

$\Sigma\ EGLR_{1C}$ = Sum of the residual emissions, megagrams per year, from all Group 1 gasoline loading racks, as defined in § 63.641.

$\Sigma\ EGLR_2$ = Sum of the emissions, megagrams per year, from all Group 2 gasoline loading racks, as defined in § 63.641.

$(R)\Sigma\ EMV_1$ = Sum of the residual emissions megagrams per year, from all Group 1 marine tank vessels, as defined in § 63.641.

R = 0.03 for existing sources, 0.02 for new sources.

$\Sigma\ EMV_2$ = Sum of the emissions, megagrams per year from all Group 2 marine tank vessels, as defined in § 63.641.

$\Sigma\ EWW_{1C}$ = Sum of the residual emissions from all Group 1 wastewater streams, as defined in § 63.641. This term is calculated for each Group 1 stream according to the equation for $EWW_{ic}$ in § 63.652(h)(6).

$\Sigma\ EWW_2$ = Sum of emissions from all Group 2 wastewater streams, as defined in § 63.641.

The emissions level represented by this equation is dependent on the collection of emission points in the source. The level is not fixed and can change as the emissions from each emission point change or as the number of emission points in the source changes.

(h) The owner or operator of a new source subject to the requirements of this subpart shall control emissions of organic HAP's to the level represented by the equation in paragraph (g) of this section.

(i) The owner or operator of an existing source shall demonstrate compliance with the emission standard in paragraph (g) of this section by following the procedures specified in paragraph (k) of this section for all emission points, or by following the emissions averaging compliance approach specified in paragraph (l) of this section for specified emission points and the procedures specified in paragraph (k) of this section for all other emission points within the source.

(j) The owner or operator of a new source shall demonstrate compliance with the emission standard in paragraph (h) of this section only by following the procedures in paragraph (k) of this section. The owner or operator of a new source may not use the emissions averaging compliance approach.

(k) The owner or operator of an existing source may comply, and the owner or operator of a new source shall comply, with the miscellaneous process vent provisions in §§ 63.643 through 63.645, the storage vessel provisions in § 63.646, the wastewater provisions in § 63.647, the gasoline loading rack provisions in § 63.650, and the marine tank vessel loading operation provisions in § 63.651 of this subpart.

(1) The owner or operator using this compliance approach shall also comply with the requirements of § 63.655 as applicable.

(2) The owner or operator using this compliance approach is not required to calculate the annual emission rate specified in paragraph (g) of this section.

(l) The owner or operator of an existing source may elect to control some of the emission points within the source to different levels than specified under §§ 63.643 through 63.647, §§ 63.650 and 63.651 by using an emissions averaging compliance approach as long as the overall emissions for the source do not exceed the emission level specified in paragraph (g) of this section. The owner or operator using emissions averaging shall meet the requirements in paragraphs (l)(1) and (l)(2) of this section.

(1) Calculate emission debits and credits for those emission points involved in the emissions average according to the procedures specified in § 63.652; and

(2) Comply with the requirements of §§ 63.652, 63.653, and 63.655, as applicable.

(m) A State may restrict the owner or operator of an existing source to using only the procedures in paragraph (k) of this section to comply with the emission standard in paragraph (g) of this section. Such a restriction would preclude the source from using an emissions averaging compliance approach.

[60 FR 43260, Aug. 18, 1995; 61 FR 7051, Feb. 23, 1996, as amended at 61 FR 29879, June 12, 1996; 74 FR 55685, Oct. 28, 2009]

**§ 63.643 Miscellaneous process vent provisions.**

(a) The owner or operator of a Group 1 miscellaneous process vent as defined in § 63.641 shall comply with the requirements of either paragraphs (a)(1) or (a)(2) of this section.

(1) Reduce emissions of organic HAP's using a flare that meets the requirements of § 63.11(b) of subpart A of this part.

(2) Reduce emissions of organic HAP's, using a control device, by 98 weight-percent or to a concentration of 20 parts per million by volume, on a dry basis, corrected to 3 percent oxygen, whichever is less stringent. Compliance can be determined by measuring either organic HAP's or TOC's using the procedures in § 63.645.

(b) If a boiler or process heater is used to comply with the percentage of reduction requirement or concentration limit specified in paragraph (a)(2) of this section, then the vent stream shall be introduced into the flame zone of such a device, or in a location such that the required percent reduction or concentration is achieved. Testing and monitoring is required only as specified in §§ 63.644(a) and 63.645 of this subpart.

**§ 63.644 Monitoring provisions for miscellaneous process vents.**

(a) Except as provided in paragraph (b) of this section, each owner or operator of a Group 1 miscellaneous process vent that uses a combustion device to comply with the requirements in § 63.643(a) shall install the monitoring equipment specified in paragraph (a)(1), (a)(2), (a)(3), or (a)(4) of this section, depending on the type of combustion device used. All monitoring equipment shall be installed, calibrated, maintained, and operated according to manufacturer's specifications or other written procedures that provide adequate assurance that the equipment will monitor accurately.

(1) Where an incinerator is used, a temperature monitoring device equipped with a continuous recorder is required.

(i) Where an incinerator other than a catalytic incinerator is used, a temperature monitoring device shall be installed in the firebox or in the ductwork immediately downstream of the firebox in a position before any substantial heat exchange occurs.

(ii) Where a catalytic incinerator is used, temperature monitoring devices shall be installed in the gas stream immediately before and after the catalyst bed.

(2) Where a flare is used, a device (including but not limited to a thermocouple, an ultraviolet beam sensor, or an infrared sensor) capable of continuously detecting the presence of a pilot flame is required.

(3) Any boiler or process heater with a design heat input capacity greater than or equal to 44 megawatt or any boiler or process heater in which all vent streams are introduced into the flame zone is exempt from monitoring.

(4) Any boiler or process heater less than 44 megawatts design heat capacity where the vent stream is not introduced into the flame zone is required to use a temperature monitoring device in the firebox equipped with a continuous recorder.

(b) An owner or operator of a Group 1 miscellaneous process vent may request approval to monitor parameters other than those listed in paragraph (a) of this section. The request shall be submitted according to the procedures specified in § 63.655(h). Approval shall be requested if the owner or operator:

(1) Uses a control device other than an incinerator, boiler, process heater, or flare; or

(2) Uses one of the control devices listed in paragraph (a) of this section, but seeks to monitor a parameter other than those specified in paragraph (a) of this section.

(c) The owner or operator of a Group 1 miscellaneous process vent using a vent system that contains bypass lines that could divert a vent stream away from the control device used to comply with paragraph (a) of this section shall comply with either paragraph (c)(1) or (c)(2) of this section. Equipment such as low leg drains, high point bleeds, analyzer vents, open-ended valves or lines, pressure relief valves needed for safety reasons, and equipment subject to § 63.648 are not subject to this paragraph.

(1) Install, calibrate, maintain, and operate a flow indicator that determines whether a vent stream flow is present at least once every hour. Records shall be generated as specified in § 63.655(h) and (i). The flow indicator shall be installed at the entrance to any bypass line that could divert the vent stream away from the control device to the atmosphere; or

(2) Secure the bypass line valve in the closed position with a car-seal or a lock-and-key type configuration. A visual inspection of the seal or closure mechanism shall be performed at least once every month to ensure that the valve is maintained in the closed position and the vent stream is not diverted through the bypass line.

(d) The owner or operator shall establish a range that ensures compliance with the emissions standard for each parameter monitored under paragraphs (a) and (b) of this section. In order to establish the range, the information required in § 63.655(f)(3) shall be submitted in the Notification of Compliance Status report.

(e) Each owner or operator of a control device subject to the monitoring provisions of this section shall operate the control device in a manner consistent with the minimum and/or maximum operating parameter value or procedure required to be monitored under paragraphs (a) and (b) of this section. Operation of the control device in a manner that constitutes a period of excess emissions, as defined in § 63.655(g)(6), or failure to perform procedures required by this section shall constitute a violation of the applicable emission standard of this subpart.

[60 FR 43260, Aug. 18, 1995, as amended at 61 FR 29880, June 12, 1996; 63 FR 44141, Aug. 18, 1998; 74 FR 55685, Oct. 28, 2009]

**§ 63.645 Test methods and procedures for miscellaneous process vents.**

(a) To demonstrate compliance with § 63.643, an owner or operator shall follow § 63.116 except for § 63.116 (a)(1), (d) and (e) of subpart G of this part except as provided in paragraphs (b) through (d) and paragraph (i) of this section.

(b) All references to § 63.113(a)(1) or (a)(2) in § 63.116 of subpart G of this part shall be replaced with § 63.643(a)(1) or (a)(2), respectively.

(c) In § 63.116(c)(4)(ii)(C) of subpart G of this part, organic HAP's in the list of HAP's in table 1 of this subpart shall be considered instead of the organic HAP's in table 2 of subpart F of this part.

(d) All references to § 63.116(b)(1) or (b)(2) shall be replaced with paragraphs (d)(1) and (d)(2) of this section, respectively.

(1) Any boiler or process heater with a design heat input capacity of 44 megawatts or greater.

(2) Any boiler or process heater in which all vent streams are introduced into the flame zone.

(e) For purposes of determining the TOC emission rate, as specified under paragraph (f) of this section, the sampling site shall be after the last product recovery device (as defined in § 63.641 of this subpart) (if any recovery devices are present) but prior to the inlet of any control device (as defined in § 63.641 of this subpart) that is present, prior to any dilution of the process vent stream, and prior to release to the atmosphere.

(1) Methods 1 or 1A of 40 CFR part 60, appendix A, as appropriate, shall be used for selection of the sampling site.

(2) No traverse site selection method is needed for vents smaller than 0.10 meter in diameter.

(f) Except as provided in paragraph (g) of this section, an owner or operator seeking to demonstrate that a process vent TOC mass flow rate is less than 33 kilograms per day for an existing source or less than 6.8 kilograms per day for a new source in accordance with the Group 2 process vent definition of this subpart shall determine the TOC mass flow rate by the following procedures:

(1) The sampling site shall be selected as specified in paragraph (e) of this section.

(2) The gas volumetric flow rate shall be determined using Methods 2, 2A, 2C, or 2D of 40 CFR part 60, appendix A, as appropriate.

(3) Method 18 or Method 25A of 40 CFR part 60, appendix A shall be used to measure concentration; alternatively, any other method or data that has been validated according to the protocol in Method 301 of appendix A of this part may be used. If Method 25A is used, and the TOC mass flow rate calculated from the Method 25A measurement is greater than or equal to 33 kilograms per day for an existing source or 6.8 kilograms per day for a new source, Method 18 may be used to determine any non-VOC hydrocarbons that may be deducted to calculate the TOC (minus non-VOC hydrocarbons) concentration and mass flow rate. The following procedures shall be used to calculate parts per million by volume concentration:

(i) The minimum sampling time for each run shall be 1 hour in which either an integrated sample or four grab samples shall be taken. If grab sampling is used, then the samples shall be taken at approximately equal intervals in time, such as 15-minute intervals during the run.

(ii) The TOC concentration ($C_{TOC}$ ) is the sum of the concentrations of the individual components and shall be computed for each run using the following equation if Method 18 is used:

$$C_{TOC} = \frac{\sum_{i=1}^{x}\left(\sum_{j=1}^{n} C_{ji}\right)}{X}$$

where:

$C_{TOC}$ =Concentration of TOC (minus methane and ethane), dry basis, parts per million by volume.

$C_{ji}$ =Concentration of sample component j of the sample i, dry basis, parts per million by volume.

n=Number of components in the sample.

x=Number of samples in the sample run.

(4) The emission rate of TOC (minus methane and ethane) ($E_{TOC}$ ) shall be calculated using the following equation if Method 18 is used:

$$E = K_2\left[\sum_{j=1}^{n} C_j M_j\right] Q_s$$

where:

E=Emission rate of TOC (minus methane and ethane) in the sample, kilograms per day.

$K_2$ = Constant, $5.986 \times 10^{-5}$ (parts per million) $^{-1}$ (gram-mole per standard cubic meter) (kilogram per gram) (minute per day), where the standard temperature (standard cubic meter) is at 20 °C.

$C_j$ =Concentration on a dry basis of organic compound j in parts per million as measured by Method 18 of 40 CFR part 60, appendix A, as indicated in paragraph (f)(3) of this section. $C_j$ includes all organic compounds measured minus methane and ethane.

$M_j$ =Molecular weight of organic compound j, gram per gram-mole.

$Q_s$ =Vent stream flow rate, dry standard cubic meters per minute, at a temperature of 20 °C.

(5) If Method 25A is used, the emission rate of TOC ($E_{TOC}$ ) shall be calculated using the following equation:

$E_{TOC} = K_2\ C_{TOC}\ MQ_s$

where:

$E_{TOC}$ =Emission rate of TOC (minus methane and ethane) in the sample, kilograms per day.

$K_2$ =Constant, $5.986\times10^{-5}$ (parts per million)$^{-1}$ (gram-mole per standard cubic meter) (kilogram per gram)(minute per day), where the standard temperature (standard cubic meter) is at 20 °C.

$C_{TOC}$ =Concentration of TOC on a dry basis in parts per million volume as measured by Method 25A of 40 CFR part 60, appendix A, as indicated in paragraph (f)(3) of this section.

M=Molecular weight of organic compound used to express units of $C_{TOC}$ , gram per gram-mole.

$Q_s$ =Vent stream flow rate, dry standard cubic meters per minute, at a temperature of 20 °C.

(g) Engineering assessment may be used to determine the TOC emission rate for the representative operating condition expected to yield the highest daily emission rate.

(1) Engineering assessment includes, but is not limited to, the following:

(i) Previous test results provided the tests are representative of current operating practices at the process unit.

(ii) Bench-scale or pilot-scale test data representative of the process under representative operating conditions.

(iii) TOC emission rate specified or implied within a permit limit applicable to the process vent.

(iv) Design analysis based on accepted chemical engineering principles, measurable process parameters, or physical or chemical laws or properties. Examples of analytical methods include, but are not limited to:

(A) Use of material balances based on process stoichiometry to estimate maximum TOC concentrations;

(B) Estimation of maximum flow rate based on physical equipment design such as pump or blower capacities; and

(C) Estimation of TOC concentrations based on saturation conditions.

(v) All data, assumptions, and procedures used in the engineering assessment shall be documented.

(h) The owner or operator of a Group 2 process vent shall recalculate the TOC emission rate for each process vent, as necessary, whenever process changes are made to determine whether the vent is in Group 1 or Group 2. Examples of process changes include, but are not limited to, changes in production capacity, production rate, or catalyst type, or whenever there is replacement, removal, or addition of recovery equipment. For purposes of this paragraph, process changes do not include: process upsets; unintentional, temporary process changes; and changes that are within the range on which the original calculation was based.

(1) The TOC emission rate shall be recalculated based on measurements of vent stream flow rate and TOC as specified in paragraphs (e) and (f) of this section, as applicable, or on best engineering assessment of the effects of the change. Engineering assessments shall meet the specifications in paragraph (g) of this section.

(2) Where the recalculated TOC emission rate is greater than 33 kilograms per day for an existing source or greater than 6.8 kilograms per day for a new source, the owner or operator shall submit a report as specified in § 63.655(f), (g), or (h) and shall comply with the appropriate provisions in § 63.643 by the dates specified in § 63.640.

(i) A compliance determination for visible emissions shall be conducted within 150 days of the compliance date using Method 22 of 40 CFR part 60, appendix A, to determine visible emissions.

[60 FR 43260, Aug. 18, 1995, as amended at 61 FR 29880, June 12, 1996; 63 FR 44141, Aug. 18, 1998; 74 FR 55685, Oct. 28, 2009]

**§ 63.646 Storage vessel provisions.**

(a) Each owner or operator of a Group 1 storage vessel subject to this subpart shall comply with the requirements of §§ 63.119 through 63.121 except as provided in paragraphs (b) through (l) of this section.

(b) As used in this section, all terms not defined in § 63.641 shall have the meaning given them in 40 CFR part 63, subparts A or G. The Group 1 storage vessel definition presented in § 63.641 shall apply in lieu of the Group 1 storage vessel definitions presented in tables 5 and 6 of § 63.119 of subpart G of this part.

(1) An owner or operator may use good engineering judgment or test results to determine the stored liquid weight percent total organic HAP for purposes of group determination. Data, assumptions, and procedures used in the determination shall be documented.

(2) When an owner or operator and the Administrator do not agree on whether the annual average weight percent organic HAP in the stored liquid is above or below 4 percent for a storage vessel at an existing source or above or below 2 percent for a storage vessel at a new source, Method 18 of 40 CFR part 60, appendix A shall be used.

(c) The following paragraphs do not apply to storage vessels at existing sources subject to this subpart: § 63.119 (b)(5), (b)(6), (c)(2), and (d)(2).

(d) References shall apply as specified in paragraphs (d)(1) through (d)(10) of this section.

(1) All references to § 63.100(k) of subpart F of this part (or the schedule provisions and the compliance date) shall be replaced with § 63.640(h),

(2) All references to April 22, 1994 shall be replaced with August 18, 1995.

(3) All references to December 31, 1992 shall be replaced with July 15, 1994.

(4) All references to the compliance dates specified in § 63.100 of subpart F shall be replaced with § 63.640 (h) through (m).

(5) All references to § 63.150 in § 63.119 of subpart G of this part shall be replaced with § 63.652.

(6) All references to § 63.113(a)(2) of subpart G shall be replaced with § 63.643(a)(2) of this subpart.

(7) All references to § 63.126(b)(1) of subpart G shall be replaced with § 63.422(b) of subpart R of this part.

(8) All references to § 63.128(a) of subpart G shall be replaced with § 63.425, paragraphs (a) through (c) and (e) through (h) of subpart R of this part.

(9) All references to § 63.139(d)(1) in § 63.120(d)(1)(ii) of subpart G are not applicable. For sources subject to this subpart, such references shall mean that 40 CFR 61.355 is applicable.

(10) All references to § 63.139(c) in § 63.120(d)(1)(ii) of subpart G are not applicable. For sources subject to this subpart, such references shall mean that § 63.647 of this subpart is applicable.

(e) When complying with the inspection requirements of § 63.120 of subpart G of this part, owners and operators of storage vessels at existing sources subject to this subpart are not required to comply with the provisions for gaskets, slotted membranes, and sleeve seals.

(f) The following paragraphs (f)(1), (f)(2), and (f)(3) of this section apply to Group 1 storage vessels at existing sources:

(1) If a cover or lid is installed on an opening on a floating roof, the cover or lid shall remain closed except when the cover or lid must be open for access.

(2) Rim space vents are to be set to open only when the floating roof is not floating or when the pressure beneath the rim seal exceeds the manufacturer's recommended setting.

(3) Automatic bleeder vents are to be closed at all times when the roof is floating except when the roof is being floated off or is being landed on the roof leg supports.

(g) Failure to perform inspections and monitoring required by this section shall constitute a violation of the applicable standard of this subpart.

(h) References in §§ 63.119 through 63.121 to § 63.122(g)(1), § 63.151, and references to initial notification requirements do not apply.

(i) References to the Implementation Plan in § 63.120, paragraphs (d)(2) and (d)(3)(i) shall be replaced with the Notification of Compliance Status report.

(j) References to the Notification of Compliance Status report in § 63.152(b) mean the Notification of Compliance Status required by § 63.655(f).

(k) References to the Periodic Reports in § 63.152(c) mean the Periodic Report required by § 63.655(g).

(l) The State or local permitting authority can waive the notification requirements of §§ 63.120(a)(5), 63.120(a)(6), 63.120(b)(10)(ii), and 63.120(b)(10)(iii) for all or some storage vessels at petroleum refineries subject to this subpart. The State or local permitting authority may also grant permission to refill storage vessels sooner than 30 days after submitting the notifications in § 63.120(a)(6) or § 63.120(b)(10)(iii) for all storage vessels at a refinery or for individual storage vessels on a case-by-case basis.

[60 FR 43260, Aug. 18, 1995, as amended at 61 FR 29880, June 12, 1996; 62 FR 7939, Feb. 21, 1997; 74 FR 55685, Oct. 28, 2009; 75 FR 37731, June 30, 2010]

**§ 63.647 Wastewater provisions.**

(a) Except as provided in paragraph (b) of this section, each owner or operator of a Group 1 wastewater stream shall comply with the requirements of §§ 61.340 through 61.355 of 40 CFR part 61, subpart FF for each process wastewater stream that meets the definition in § 63.641.

(b) As used in this section, all terms not defined in § 63.641 shall have the meaning given them in the Clean Air Act or in 40 CFR part 61, subpart FF, § 61.341.

(c) Each owner or operator required under subpart FF of 40 CFR part 61 to perform periodic measurement of benzene concentration in wastewater, or to monitor process or control device operating parameters shall operate in a manner consistent with the minimum or maximum (as appropriate) permitted concentration or operating parameter values. Operation of the process, treatment unit, or control device resulting in a measured concentration or operating parameter value outside the permitted limits shall constitute a violation of the emission standards. Failure to perform required leak monitoring for closed vent systems and control devices or failure to repair leaks within the time period specified in subpart FF of 40 CFR part 61 shall constitute a violation of the standard.

**§ 63.648 Equipment leak standards.**

(a) Each owner or operator of an existing source subject to the provisions of this subpart shall comply with the provisions of 40 CFR part 60 subpart VV and paragraph (b) of this section except as provided in paragraphs (a)(1), (a)(2), and (c) through (i) of this section. Each owner or operator of a new source subject to the provisions of this subpart shall comply with subpart H of this part except as provided in paragraphs (c) through (i) of this section.

(1) For purposes of compliance with this section, the provisions of 40 CFR part 60, subpart VV apply only to equipment in organic HAP service, as defined in § 63.641 of this subpart.

(2) Calculation of percentage leaking equipment components for subpart VV of 40 CFR part 60 may be done on a process unit basis or a sourcewide basis. Once the owner or operator has decided, all subsequent calculations shall be on the same basis unless a permit change is made.

(b) The use of monitoring data generated before August 18, 1995 to qualify for less frequent monitoring of valves and pumps as provided under 40 CFR part 60 subpart VV or subpart H of this part and paragraph (c) of this section (i.e., quarterly or semiannually) is governed by the requirements of paragraphs (b)(1) and (b)(2) of this section.

(1) Monitoring data must meet the test methods and procedures specified in § 60.485(b) of 40 CFR part 60, subpart VV or § 63.180(b)(1) through (b)(5) of subpart H of this part except for minor departures.

(2) Departures from the criteria specified in § 60.485(b) of 40 CFR part 60 subpart VV or § 63.180(b)(1) through (b)(5) of subpart H of this part or from the monitoring frequency specified in subpart VV or in paragraph (c) of this section (such as every 6 weeks instead of monthly or quarterly) are minor and do not significantly affect the quality of the data. An example of a minor departure is monitoring at a slightly different frequency (such as every 6 weeks instead of monthly or quarterly). Failure to use a calibrated instrument is not considered a minor departure.

(c) In lieu of complying with the existing source provisions of paragraph (a) in this section, an owner or operator may elect to comply with the requirements of §§ 63.161 through 63.169, 63.171, 63.172, 63.175, 63.176, 63.177, 63.179, and 63.180 of subpart H of this part except as provided in paragraphs (c)(1) through (c)(10) and (e) through (i) of this section.

(1) The instrument readings that define a leak for light liquid pumps subject to § 63.163 of subpart H of this part and gas/vapor and light liquid valves subject to § 63.168 of subpart H of this part are specified in table 2 of this subpart.

(2) In phase III of the valve standard, the owner or operator may monitor valves for leaks as specified in paragraphs (c)(2)(i) or (c)(2)(ii) of this section.

(i) If the owner or operator does not elect to monitor connectors, then the owner or operator shall monitor valves according to the frequency specified in table 8 of this subpart.

(ii) If an owner or operator elects to monitor connectors according to the provisions of § 63.649, paragraphs (b), (c), or (d), then the owner or operator shall monitor valves at the frequencies specified in table 9 of this subpart.

(3) The owner or operator shall decide no later than the first required monitoring period after the phase I compliance date specified in § 63.640(h) whether to calculate the percentage leaking valves on a process unit basis or on a sourcewide basis. Once the owner or operator has decided, all subsequent calculations shall be on the same basis unless a permit change is made.

(4) The owner or operator shall decide no later than the first monitoring period after the phase III compliance date specified in § 63.640(h) whether to monitor connectors according to the provisions in § 63.649, paragraphs (b), (c), or (d).

(5) Connectors in gas/vapor service or light liquid service are subject to the requirements for connectors in heavy liquid service in § 63.169 of subpart H of this part (except for the agitator provisions). The leak definition for valves, connectors, and instrumentation systems subject to § 63.169 is 1,000 parts per million.

(6) In phase III of the pump standard, except as provided in paragraph (c)(7) of this section, owners or operators that achieve less than 10 percent of light liquid pumps leaking or three light liquid pumps leaking, whichever is greater, shall monitor light liquid pumps monthly.

(7) Owners or operators that achieve less than 3 percent of light liquid pumps leaking or one light liquid pump leaking, whichever is greater, shall monitor light liquid pumps quarterly.

(8) An owner or operator may make the election described in paragraphs (c)(3) and (c)(4) of this section at any time except that any election to change after the initial election shall be treated as a permit modification according to the terms of part 70 of this chapter.

(9) When complying with the requirements of § 63.168(e)(3)(i), non-repairable valves shall be included in the calculation of percent leaking valves the first time the valve is identified as leaking and non-repairable. Otherwise, a number of non-repairable valves up to a maximum of 1 percent per year of the total number of valves in organic HAP service up to a maximum of 3 percent may be excluded from calculation of percent leaking valves for subsequent monitoring periods. When the number of non-repairable valves exceeds 3 percent of the total number of valves in organic HAP service, the number of non-repairable valves exceeding 3 percent of the total number shall be included in the calculation of percent leaking valves.

(10) If in phase III of the valve standard any valve is designated as being leakless, the owner or operator has the option of following the provisions of 40 CFR 60.482-7(f). If an owner or operator chooses to comply with the provisions of 40 CFR 60.482-7(f), the valve is exempt from the valve monitoring provisions of § 63.168 of subpart H of this part.

(d) Upon startup of new sources, the owner or operator shall comply with § 63.163(a)(1)(ii) of subpart H of this part for light liquid pumps and § 63.168(a)(1)(ii) of subpart H of this part for gas/vapor and light liquid valves.

(e) For reciprocating pumps in heavy liquid service and agitators in heavy liquid service, owners and operators are not required to comply with the requirements in § 63.169 of subpart H of this part.

(f) Reciprocating pumps in light liquid service are exempt from §§ 63.163 and 60.482 if recasting the distance piece or reciprocating pump replacement is required.

(g) Compressors in hydrogen service are exempt from the requirements of paragraphs (a) and (c) of this section if an owner or operator demonstrates that a compressor is in hydrogen service.

(1) Each compressor is presumed not to be in hydrogen service unless an owner or operator demonstrates that the piece of equipment is in hydrogen service.

(2) For a piece of equipment to be considered in hydrogen service, it must be determined that the percentage hydrogen content can be reasonably expected always to exceed 50 percent by volume.

(i) For purposes of determining the percentage hydrogen content in the process fluid that is contained in or contacts a compressor, the owner or operator shall use either:

(A) Procedures that conform to those specified in § 60.593(b)(2) of 40 part 60, subpart GGG.

(B) Engineering judgment to demonstrate that the percentage content exceeds 50 percent by volume, provided the engineering judgment demonstrates that the content clearly exceeds 50 percent by volume.

( *1* ) When an owner or operator and the Administrator do not agree on whether a piece of equipment is in hydrogen service, the procedures in paragraph (g)(2)(i)(A) of this section shall be used to resolve the disagreement.

( *2* ) If an owner or operator determines that a piece of equipment is in hydrogen service, the determination can be revised only by following the procedures in paragraph (g)(2)(i)(A) of this section.

(h) Each owner or operator of a source subject to the provisions of this subpart must maintain all records for a minimum of 5 years.

(i) Reciprocating compressors are exempt from seal requirements if recasting the distance piece or compressor replacement is required.

[60 FR 43260, Aug. 18, 1995, as amended at 61 FR 29880, June 12, 1996; 63 FR 44141, Aug. 18, 1998]

**§ 63.649 Alternative means of emission limitation: Connectors in gas/vapor service and light liquid service.**

(a) If an owner or operator elects to monitor valves according to the provisions of § 63.648(c)(2)(ii), the owner or operator shall implement one of the connector monitoring programs specified in paragraphs (b), (c), or (d) of this section.

(b) *Random 200 connector alternative.* The owner or operator shall implement a random sampling program for accessible connectors of 2.0 inches nominal diameter or greater. The program does not apply to inaccessible or unsafe-to-monitor connectors, as defined in § 63.174 of subpart H. The sampling program shall be implemented source-wide.

(1) Within the first 12 months after the phase III compliance date specified in § 63.640(h), a sample of 200 connectors shall be randomly selected and monitored using Method 21 of 40 CFR part 60, appendix A.

(2) The instrument reading that defines a leak is 1,000 parts per million.

(3) When a leak is detected, it shall be repaired as soon as practicable, but no later than 15 calendar days after the leak is detected except as provided in paragraph (e) of this section. A first attempt at repair shall be made no later than 5 calendar days after the leak is detected.

(4) If a leak is detected, the connector shall be monitored for leaks within the first 3 months after its repair.

(5) After conducting the initial survey required in paragraph (b)(1) of this section, the owner or operator shall conduct subsequent monitoring of connectors at the frequencies specified in paragraphs (b)(5)(i) through (b)(5)(iv) of this section.

(i) If the percentage leaking connectors is 2.0 percent or greater, the owner or operator shall survey a random sample of 200 connectors once every 6 months.

(ii) If the percentage leaking connectors is 1.0 percent or greater but less than 2.0 percent, the owner or operator shall survey a random sample of 200 connectors once per year.

(iii) If the percentage leaking connectors is 0.5 percent or greater but less than 1.0 percent, the owner or operator shall survey a random sample of 200 connectors once every 2 years.

(iv) If the percentage leaking connectors is less than 0.5 percent, the owner or operator shall survey a random sample of 200 connectors once every 4 years.

(6) Physical tagging of the connectors to indicate that they are subject to the monitoring provisions is not required. Connectors may be identified by the area or length of pipe and need not be individually identified.

(c) *Connector inspection alternative.* The owner or operator shall implement a program to monitor all accessible connectors in gas/vapor service that are 2.0 inches (nominal diameter) or greater and inspect all accessible connectors in light liquid service that are 2 inches (nominal diameter) or greater as described in paragraphs (c)(1) through (c)(7) of this section. The program does not apply to inaccessible or unsafe-to-monitor connectors.

(1) Within 12 months after the phase III compliance date specified in § 63.640(h), all connectors in gas/vapor service shall be monitored using Method 21 of 40 CFR part 60 appendix A. The instrument reading that defines a leak is 1,000 parts per million.

(2) All connectors in light liquid service shall be inspected for leaks. A leak is detected if liquids are observed to be dripping at a rate greater than three drops per minute.

(3) When a leak is detected, it shall be repaired as soon as practicable, but no later than 15 calendar days after the leak is detected except as provided in paragraph (e) of this section. A first attempt at repair shall be made no later than 5 calendar days after the leak is detected.

(4) If a leak is detected, connectors in gas/vapor service shall be monitored for leaks within the first 3 months after repair. Connectors in light liquid service shall be inspected for indications of leaks within the first 3 months after repair. A leak is detected if liquids are observed to be dripping at a rate greater than three drops per minute.

(5) After conducting the initial survey required in paragraphs (c)(1) and (c)(2) of this section, the owner or operator shall conduct subsequent monitoring at the frequencies specified in paragraphs (c)(5)(i) through (c)(5)(iii) of this section.

(i) If the percentage leaking connectors is 2.0 percent or greater, the owner or operator shall monitor or inspect, as applicable, the connectors once per year.

(ii) If the percentage leaking connectors is 1.0 percent or greater but less than 2.0 percent, the owner or operator shall monitor or inspect, as applicable, the connectors once every 2 years.

(iii) If the percentage leaking connectors is less than 1.0 percent, the owner or operator shall monitor or inspect, as applicable, the connectors once every 4 years.

(6) The percentage leaking connectors shall be calculated for connectors in gas/vapor service and for connectors in light liquid service. The data for the two groups of connectors shall not be pooled for the purpose of determining the percentage leaking connectors.

(i) The percentage leaking connectors shall be calculated as follows:

$$\% C_L = [(C_L - C_{AN})/C_t + C_c)] \times 100$$

where:

$\% C_L$ =Percentage leaking connectors.

$C_L$ =Number of connectors including nonrepairables, measured at 1,000 parts per million or greater, by Method 21 of 40 CFR part 60, appendix A.

$C_{AN}$ =Number of allowable nonrepairable connectors, as determined by monitoring, not to exceed 3 percent of the total connector population, $C_t$ .

$C_t$ =Total number of monitored connectors, including nonrepairables, in the process unit.

$C_c$ =Optional credit for removed connectors=0.67×net number (i.e., the total number of connectors removed minus the total added) of connectors in organic HAP service removed from the process unit after the applicability date set forth in § 63.640(h)(4)(iii) for existing process units, and after the date of start-up for new process units. If credits are not taken, then $C_c$ =0.

(ii) Nonrepairable connectors shall be included in the calculation of percentage leaking connectors the first time the connector is identified as leaking and nonrepairable. Otherwise, a number of nonrepairable connectors up to a maximum of 1 percent per year of the total number of connectors in organic HAP service up to a maximum of 3 percent may be excluded from calculation of percentage leaking connectors for subsequent monitoring periods.

(iii) If the number of nonrepairable connectors exceeds 3 percent of the total number of connectors in organic HAP service, the number of nonrepairable connectors exceeding 3 percent of the total number shall be included in the calculation of the percentage leaking connectors.

(7) Physical tagging of the connectors to indicate that they are subject to the monitoring provisions is not required. Connectors may be identified by the area or length of pipe and need not be individually identified.

(d) *Subpart H program.* The owner or operator shall implement a program to comply with the provisions in § 63.174 of this part.

(e) Delay of repair of connectors for which leaks have been detected is allowed if repair is not technically feasible by normal repair techniques without a process unit shutdown. Repair of this equipment shall occur by the end of the next process unit shutdown.

(1) Delay of repair is allowed for equipment that is isolated from the process and that does not remain in organic HAP service.

(2) Delay of repair for connectors is also allowed if:

(i) The owner or operator determines that emissions of purged material resulting from immediate repair would be greater than the fugitive emissions likely to result from delay of repair, and

(ii) When repair procedures are accomplished, the purged material would be collected and destroyed or recovered in a control device.

(f) Any connector that is designated as an unsafe-to-repair connector is exempt from the requirements of paragraphs (b)(3) and (b)(4), (c)(3) and (c)(4), or (d) of this section if:

(1) The owner or operator determines that repair personnel would be exposed to an immediate danger as a consequence of complying with paragraphs (b)(3) and (b)(4), (c)(3) and (c)(4), of this section; or

(2) The connector will be repaired before the end of the next scheduled process unit shutdown.

(g) The owner or operator shall maintain records to document that the connector monitoring or inspections have been conducted as required and to document repair of leaking connectors as applicable.

**§ 63.650 Gasoline loading rack provisions.**

(a) Except as provided in paragraphs (b) through (c) of this section, each owner or operator of a Group 1 gasoline loading rack classified under Standard Industrial Classification code 2911 located within a contiguous area and under common control with a petroleum refinery shall comply with subpart R, §§ 63.421, 63.422(a) through (c) and (e), 63.425(a) through (c) and (i), 63.425(e) through (h), 63.427(a) and (b), and 63.428(b), (c), (g)(1), (h)(1) through (3), and (k).

(b) As used in this section, all terms not defined in § 63.641 shall have the meaning given them in subpart A or in 40 CFR part 63, subpart R. The § 63.641 definition of “affected source” applies under this section.

(c) Gasoline loading racks regulated under this subpart are subject to the compliance dates specified in § 63.640(h).

[60 FR 43260, Aug. 18, 1995, as amended at 61 FR 29880, June 12, 1996; 74 FR 55685, Oct. 28, 2009]

**§ 63.651 Marine tank vessel loading operation provisions.**

(a) Except as provided in paragraphs (b) through (d) of this section, each owner or operator of a marine tank vessel loading operation located at a petroleum refinery shall comply with the requirements of §§ 63.560 through 63.568.

(b) As used in this section, all terms not defined in § 63.641 shall have the meaning given them in subpart A or in 40 CFR part 63, subpart Y. The § 63.641 definition of “affected source” applies under this section.

(c) The notification reports under § 63.567(b) are not required.

(d) The compliance time of 4 years after promulgation of 40 CFR part 63, subpart Y does not apply. The compliance time is specified in § 63.640(h)(3).

[60 FR 43260, Aug. 18, 1995, as amended at 61 FR 29880, June 12, 1996; 74 FR 55685, Oct. 28, 2009]

**§ 63.652 Emissions averaging provisions.**

(a) This section applies to owners or operators of existing sources who seek to comply with the emission standard in § 63.642(g) by using emissions averaging according to § 63.642(l) rather than following the provisions of §§ 63.643 through 63.647, and §§ 63.650 and 63.651. Existing marine tank vessel loading operations located at the Valdez Marine Terminal source may not comply with the standard by using emissions averaging.

(b) The owner or operator shall develop and submit for approval an Implementation Plan containing all of the information required in § 63.653(d) for all points to be included in an emissions average. The Implementation Plan shall identify all emission points to be included in the emissions average. This must include any Group 1 emission points to which the reference control technology (defined in § 63.641) is not applied and all other emission points being controlled as part of the average.

(c) The following emission points can be used to generate emissions averaging credits if control was applied after November 15, 1990 and if sufficient information is available to determine the appropriate value of credits for the emission point:

(1) Group 2 emission points;

(2) Group 1 storage vessels, Group 1 wastewater streams, Group 1 gasoline loading racks, Group 1 marine tank vessels, and Group 1 miscellaneous process vents that are controlled by a technology that the Administrator or permitting authority agrees has a higher nominal efficiency than the reference control technology. Information on the nominal efficiencies for such technologies must be submitted and approved as provided in paragraph (i) of this section; and

(3) Emission points from which emissions are reduced by pollution prevention measures. Percentages of reduction for pollution prevention measures shall be determined as specified in paragraph (j) of this section.

(i) For a Group 1 emission point, the pollution prevention measure must reduce emissions more than the reference control technology would have had the reference control technology been applied to the emission point instead of the pollution prevention measure except as provided in paragraph (c)(3)(ii) of this section.

(ii) If a pollution prevention measure is used in conjunction with other controls for a Group 1 emission point, the pollution prevention measure alone does not have to reduce emissions more than the reference control technology, but the combination of the pollution prevention measure and other controls must reduce emissions more than the reference control technology would have had it been applied instead.

(d) The following emission points cannot be used to generate emissions averaging credits:

(1) Emission points already controlled on or before November 15, 1990 unless the level of control is increased after November 15, 1990, in which case credit will be allowed only for the increase in control after November 15, 1990;

(2) Group 1 emission points that are controlled by a reference control technology unless the reference control technology has been approved for use in a different manner and a higher nominal efficiency has been assigned according to the procedures in paragraph (i) of this section. For example, it is not allowable to claim that an internal floating roof meeting only the specifications stated in the reference control technology definition in § 63.641 (i.e., that meets the specifications of § 63.119(b) of subpart G but does not have controlled fittings per § 63.119 (b)(5) and (b)(6) of subpart G) applied to a storage vessel is achieving greater than 95 percent control;

(3) Emission points on shutdown process units. Process units that are shut down cannot be used to generate credits or debits;

(4) Wastewater that is not process wastewater or wastewater streams treated in biological treatment units. These two types of wastewater cannot be used to generate credits or debits. Group 1 wastewater streams cannot be left undercontrolled or uncontrolled to generate debits. For the purposes of this section, the terms “wastewater” and “wastewater stream” are used to mean process wastewater; and

(5) Emission points controlled to comply with a State or Federal rule other than this subpart, unless the level of control has been increased after November 15, 1990 above what is required by the other State or Federal rule. Only the control above what is required by the other State or Federal rule will be credited. However, if an emission point has been used to generate emissions averaging credit in an approved emissions average, and the point is subsequently made subject to a State or Federal rule other than this subpart, the point can continue to generate emissions averaging credit for the purpose of complying with the previously approved average.

(e) For all points included in an emissions average, the owner or operator shall:

(1) Calculate and record monthly debits for all Group 1 emission points that are controlled to a level less stringent than the reference control technology for those emission points. Equations in paragraph (g) of this section shall be used to calculate debits.

(2) Calculate and record monthly credits for all Group 1 or Group 2 emission points that are overcontrolled to compensate for the debits. Equations in paragraph (h) of this section shall be used to calculate credits. Emission points and controls that meet the criteria of paragraph (c) of this section may be included in the credit calculation, whereas those described in paragraph (d) of this section shall not be included.

(3) Demonstrate that annual credits calculated according to paragraph (h) of this section are greater than or equal to debits calculated for the same annual compliance period according to paragraph (g) of this section.

(i) The initial demonstration in the Implementation Plan that credit-generating emission points will be capable of generating sufficient credits to offset the debits from the debit-generating emission points must be made under representative operating conditions.

(ii) After the compliance date, actual operating data will be used for all debit and credit calculations.

(4) Demonstrate that debits calculated for a quarterly (3-month) period according to paragraph (g) of this section are not more than 1.30 times the credits for the same period calculated according to paragraph (h) of this section. Compliance for the quarter shall be determined based on the ratio of credits and debits from that quarter, with 30 percent more debits than credits allowed on a quarterly basis.

(5) Record and report quarterly and annual credits and debits in the Periodic Reports as specified in § 63.655(g)(8). Every fourth Periodic Report shall include a certification of compliance with the emissions averaging provisions as required by § 63.655(g)(8)(iii).

(f) Debits and credits shall be calculated in accordance with the methods and procedures specified in paragraphs (g) and (h) of this section, respectively, and shall not include emissions from the following:

(1) More than 20 individual emission points. Where pollution prevention measures (as specified in paragraph (j)(1) of this section) are used to control emission points to be included in an emissions average, no more than 25 emission points may be included in the average. For example, if two emission points to be included in an emissions average are controlled by pollution prevention measures, the average may include up to 22 emission points.

(2) Periods of startup, shutdown, and malfunction as described in the source's startup, shutdown, and malfunction plan required by § 63.6(e)(3) of subpart A of this part.

(3) For emission points for which continuous monitors are used, periods of excess emissions as defined in § 63.655(g)(6)(i). For these periods, the calculation of monthly credits and debits shall be adjusted as specified in paragraphs (f)(3)(i) through (f)(3)(iii) of this section.

(i) No credits would be assigned to the credit-generating emission point.

(ii) Maximum debits would be assigned to the debit-generating emission point.

(iii) The owner or operator may use the procedures in paragraph (l) of this section to demonstrate to the Administrator that full or partial credits or debits should be assigned.

(g) Debits are generated by the difference between the actual emissions from a Group 1 emission point that is uncontrolled or is controlled to a level less stringent than the reference control technology, and the emissions allowed for Group 1 emission point. Debits shall be calculated as follows:

(1) The overall equation for calculating sourcewide debits is:

$$Debits = \sum_{i=1}^{n}\left(EPV_{iACTUAL} - (0.02)\,EPV_{iu}\right) + \sum_{i=1}^{n}\left(ES_{iACTUAL} - (0.05)\,ES_{iu}\right) + \sum_{i=1}^{n}\left(EGLR_{iACTUAL} - EGLR_{iC}\right) + \sum_{i=1}^{n}\left(EMV_{iACTUAL} - (0.03)\,EMViu\right)$$

where:

Debits and all terms of the equation are in units of megagrams per month, and

$EPV_{iACTUAL}$ =Emissions from each Group 1 miscellaneous process vent i that is uncontrolled or is controlled to a level less stringent than the reference control technology. This is calculated according to paragraph (g)(2) of this section.

(0.02) $EPV_{iu}$ =Emissions from each Group 1 miscellaneous process vent i if the reference control technology had been applied to the uncontrolled emissions, calculated according to paragraph (g)(2) of this section.

$ES_{iACTUAL}$ =Emissions from each Group 1 storage vessel i that is uncontrolled or is controlled to a level less stringent than the reference control technology. This is calculated according to paragraph (g)(3) of this section.

(0.05) $ES_{iu}$ =Emissions from each Group 1 storage vessel i if the reference control technology had been applied to the uncontrolled emissions, calculated according to paragraph (g)(3) of this section.

$EGLR_{iACTUAL}$ =Emissions from each Group 1 gasoline loading rack i that is uncontrolled or is controlled to a level less stringent than the reference control technology. This is calculated according to paragraph (g)(4) of this section.

$EGLR_{ic}$ =Emissions from each Group 1 gasoline loading rack i if the reference control technology had been applied to the uncontrolled emissions. This is calculated according to paragraph (g)(4) of this section.

$EMV_{ACTUAL}$ =Emissions from each Group 1 marine tank vessel i that is uncontrolled or is controlled to a level less stringent than the reference control technology. This is calculated according to paragraph (g)(5) of this section.

(0.03) $EMV_{iu}$ =Emissions from each Group 1 marine tank vessel i if the reference control technology had been applied to the uncontrolled emissions calculated according to paragraph (g)(5) of this section.

n=The number of Group 1 emission points being included in the emissions average. The value of n is not necessarily the same for each kind of emission point.

(2) Emissions from miscellaneous process vents shall be calculated as follows:

(i) For purposes of determining miscellaneous process vent stream flow rate, organic HAP concentrations, and temperature, the sampling site shall be after the final product recovery device, if any recovery devices are present; before any control device (for miscellaneous process vents, recovery devices shall not be considered control devices); and before discharge to the atmosphere. Method 1 or 1A of part 60, appendix A shall be used for selection of the sampling site.

(ii) The following equation shall be used for each miscellaneous process vent i to calculate $EPV_{iu}$ :

$$EPV_{iu} = \left(2.494 \times 10^{-9}\right) Qh \left(\sum_{j=1}^{n} C_j M_j\right)$$

where:

$EPV_{iu}$ =Uncontrolled process vent emission rate from miscellaneous process vent i, megagrams per month.

Q=Vent stream flow rate, dry standard cubic meters per minute, measured using Methods 2, 2A, 2C, or 2D of part 60 appendix A, as appropriate.

h=Monthly hours of operation during which positive flow is present in the vent, hours per month.

$C_j$ =Concentration, parts per million by volume, dry basis, of organic HAP j as measured by Method 18 of part 60 appendix A.

$M_j$ =Molecular weight of organic HAP j, gram per gram-mole.

n=Number of organic HAP's in the miscellaneous process vent stream.

(A) The values of Q, $C_j$ , and $M_j$ shall be determined during a performance test conducted under representative operating conditions. The values of Q, $C_j$ , and $M_j$ shall be established in the Notification of Compliance Status report and must be updated as provided in paragraph (g)(2)(ii)(B) of this section.

(B) If there is a change in capacity utilization other than a change in monthly operating hours, or if any other change is made to the process or product recovery equipment or operation such that the previously measured values of Q, $C_j$ , and $M_j$ are no longer representative, a new performance test shall be conducted to determine new representative values of Q, $C_j$ , and $M_j$ . These new values shall be used to calculate debits and credits from the time of the change forward, and the new values shall be reported in the next Periodic Report.

(iii) The following procedures and equations shall be used to calculate $EPV_{iACTUAL}$ :

(A) If the vent is not controlled by a control device or pollution prevention measure, $EPV_{iACTUAL} = EPV_{iu}$ , where $EPV_{iu}$ is calculated according to the procedures in paragraphs (g)(2)(i) and (g)(2)(ii) of this section.

(B) If the vent is controlled using a control device or a pollution prevention measure achieving less than 98-percent reduction,

$$EPV_{iACTUAL} = EPV_{iu} \times \left(1 - \frac{Percent\ reduction}{100\%}\right)$$

( *1* ) The percent reduction shall be measured according to the procedures in § 63.116 of subpart G if a combustion control device is used. For a flare meeting the criteria in § 63.116(a) of subpart G, or a boiler or process heater meeting the criteria in § 63.645(d) of this subpart or § 63.116(b) of subpart G, the percentage of reduction shall be 98 percent. If a noncombustion control device is used, percentage of reduction shall be demonstrated by a performance test at the inlet and outlet of the device, or, if testing is not feasible, by a control design evaluation and documented engineering calculations.

( *2* ) For determining debits from miscellaneous process vents, product recovery devices shall not be considered control devices and cannot be assigned a percentage of reduction in calculating $EPV_{iACTUAL}$ . The sampling site for measurement of uncontrolled emissions is after the final product recovery device.

( *3* ) Procedures for calculating the percentage of reduction of pollution prevention measures are specified in paragraph (j) of this section.

(3) Emissions from storage vessels shall be calculated as specified in § 63.150(g)(3) of subpart G.

(4) Emissions from gasoline loading racks shall be calculated as follows:

(i) The following equation shall be used for each gasoline loading rack i to calculate $EGLR_{iu}$ :

$$EGLR_{iu} = \left(1.20\times10^{-7}\right)\frac{SPMG}{T}$$

where:

$EGLR_{iu}$ =Uncontrolled transfer HAP emission rate from gasoline loading rack i, megagrams per month

S=Saturation factor, dimensionless (see table 33 of subpart G).

P=Weighted average rack partial pressure of organic HAP's transferred at the rack during the month, kilopascals.

M=Weighted average molecular weight of organic HAP's transferred at the gasoline loading rack during the month, gram per gram-mole.

G=Monthly volume of gasoline transferred from gasoline loading rack, liters per month.

T=Weighted rack bulk liquid loading temperature during the month, degrees kelvin (degrees Celsius °C + 273).

(ii) The following equation shall be used for each gasoline loading rack i to calculate the weighted average rack partial pressure:

$$P = \frac{\sum_{1}^{j=n}\left(P_j\right)\left(G_j\right)}{G}$$

where:

$P_j$ =Maximum true vapor pressure of individual organic HAP transferred at the rack, kilopascals.

G=Monthly volume of organic HAP transferred, liters per month, and

$$G = \sum_{1}^{j=n} G_j$$

$G_j$ =Monthly volume of individual organic HAP transferred at the gasoline loading rack, liters per month.

n=Number of organic HAP's transferred at the gasoline loading rack.

(iii) The following equation shall be used for each gasoline loading rack i to calculate the weighted average rack molecular weight:

$$M = \frac{\sum_{1}^{j=n}(M_j)(G_j)}{G}$$

where:

$M_j$ =Molecular weight of individual organic HAP transferred at the rack, gram per gram-mole.

G, $G_j$ , and n are as defined in paragraph (g)(4)(ii) of this section.

(iv) The following equation shall be used for each gasoline loading rack i to calculate the monthly weighted rack bulk liquid loading temperature:

$$T = \frac{\sum_{1}^{j=n}(T_j)(G_j)}{G}$$

Tj =Average annual bulk temperature of individual organic HAP loaded at the gasoline loading rack, kelvin (degrees Celsius °C+273).

G, $G_j$ , and n are as defined in paragraph (g)(4)(ii) of this section.

(v) The following equation shall be used to calculate $EGLR_{ic}$ :

$$EGLR_{ic} = 1\times10^{-8}\,G$$

G is as defined in paragraph (g)(4)(ii) of this section.

(vi) The following procedures and equations shall be used to calculate $EGLR_{iACTUAL}$ :

(A) If the gasoline loading rack is not controlled, $EGLR_{iACTUAL}$ =$EGLR_{iu}$ , where $EGLR_{iu}$ is calculated using the equations specified in paragraphs (g)(4)(i) through (g)(4)(iv) of this section.

(B) If the gasoline loading rack is controlled using a control device or a pollution prevention measure not achieving the requirement of less than 10 milligrams of TOC per liter of gasoline loaded,

$$EGLR_{iACTUAL} = EGLR_{iu}\left(\frac{1 - Percent\ reduction}{100\%}\right)$$

( 1 ) The percent reduction for a control device shall be measured according to the procedures and test methods specified in § 63.128(a) of subpart G. If testing is not feasible, the percentage of reduction shall be determined through a design evaluation according to the procedures specified in § 63.128(h) of subpart G.

( *2* ) Procedures for calculating the percentage of reduction for pollution prevention measures are specified in paragraph (j) of this section.

(5) Emissions from marine tank vessel loading shall be calculated as follows:

(i) The following equation shall be used for each marine tank vessel i to calculate $EMV_{iu}$ :

$$EMV_{iu} = \sum_{i=1}^{m} (Q_i)(F_i)(P_i)$$

where:

$EMV_{iu}$ =Uncontrolled marine tank vessel HAP emission rate from marine tank vessel i, megagrams per month.

$Q_i$ =Quantity of commodity loaded (per vessel type), liters.

$F_i$ =Emission factor, megagrams per liter.

$P_i$ =Percent HAP.

m=Number of combinations of commodities and vessel types loaded.

Emission factors shall be based on test data or emission estimation procedures specified in § 63.565(l) of subpart Y.

(ii) The following procedures and equations shall be used to calculate $EMV_{iACTUAL}$ :

(A) If the marine tank vessel is not controlled, $EMV_{iACTUAL}$ =$EMV_{iu}$ , where $EMV_{iu}$ is calculated using the equations specified in paragraph (g)(5)(i) of this section.

(B) If the marine tank vessel is controlled using a control device or a pollution prevention measure achieving less than 97-percent reduction,

$$EMV_{iACTUAL} = EMV_{iu}\left(\frac{1 - Percent\ reduction}{100\%}\right)$$

( *1* ) The percent reduction for a control device shall be measured according to the procedures and test methods specified in § 63.565(d) of subpart Y. If testing is not feasible, the percentage of reduction shall be determined through a design evaluation according to the procedures specified in § 63.128(h) of subpart G.

( *2* ) Procedures for calculating the percentage of reduction for pollution prevention measures are specified in paragraph (j) of this section.

(h) Credits are generated by the difference between emissions that are allowed for each Group 1 and Group 2 emission point and the actual emissions from a Group 1 or Group 2 emission point that has been controlled after November 15, 1990 to a level more stringent than what is required by this subpart or any other State or Federal rule or statute. Credits shall be calculated as follows:

(1) The overall equation for calculating sourcewide credits is:

$$Credits = D\sum_{i=1}^{n}\left((0.02)\ \mathrm{EPV1}_{iu} - EPV1_{iACTUAL}\right) + D\sum_{i=1}^{m}\left(EPV2_{iBASE} - EPV2_{iACTUAL}\right) +$$
$$D\sum_{i=1}^{n}\left((0.05)\ \mathrm{ES1}_{iu} - ES1_{iACTUAL}\right) + D\sum_{i=1}^{m}\left(ES2_{iBASE} - ES2_{iACTUAL}\right) +$$
$$D\sum_{i=1}^{n}\left(\mathrm{EGLR}_{ic} - EGLRl_{iACTUAL}\right) + D\sum_{i=1}^{m}\left(EGLR2_{iBASE} - EGLR2_{iACTUAL}\right) +$$
$$D\sum_{i=1}^{n}\left((0.03)\ \mathrm{EMV1}_{iu} - EMV1_{iACTUAL}\right) + D\sum_{i=1}^{m}\left(EMV2_{iBASE} - EMV2_{iACTUAL}\right) +$$
$$D\sum_{i=1}^{n}\left(\mathrm{EWW1}_{ic} - EWW1_{iACTUAL}\right) + D\sum_{i=1}^{m}\left(EWW2_{iBASE} - EWW2_{iACTUAL}\right)$$

where:

Credits and all terms of the equation are in units of megagrams per month, the baseline date is November 15, 1990, and

D=Discount factor=0.9 for all credit-generating emission points except those controlled by a pollution prevention measure, which will not be discounted.

$EPV1_{iACTUAL}$ =Emissions for each Group 1 miscellaneous process vent i that is controlled to a level more stringent than the reference control technology, calculated according to paragraph (h)(2) of this section.

(0.02) $EPV1_{iu}$ =Emissions from each Group 1 miscellaneous process vent i if the reference control technology had been applied to the uncontrolled emissions. $EPV1_{iu}$ is calculated according to paragraph (h)(2) of this section.

$EPV2_{iBASE}$ =Emissions from each Group 2 miscellaneous process vent; at the baseline date, as calculated in paragraph (h)(2) of this section.

$EPV2_{iACTUAL}$ =Emissions from each Group 2 miscellaneous process vent that is controlled, calculated according to paragraph (h)(2) of this section.

$ES1_{iACTUAL}$ =Emissions from each Group 1 storage vessel i that is controlled to a level more stringent than the reference control technology, calculated according to paragraph (h)(3) of this section.

(0.05) $ES1_{iu}$ =Emissions from each Group 1 storage vessel i if the reference control technology had been applied to the uncontrolled emissions. $ES1_{iu}$ is calculated according to paragraph (h)(3) of this section.

$ES2_{iACTUAL}$ =Emissions from each Group 2 storage vessel i that is controlled, calculated according to paragraph (h)(3) of this section.

$ES2_{iBASE}$ =Emissions from each Group 2 storage vessel i at the baseline date, as calculated in paragraph (h)(3) of this section.

$EGLR1_{iACTUAL}$ =Emissions from each Group 1 gasoline loading rack i that is controlled to a level more stringent than the reference control technology, calculated according to paragraph (h)(4) of this section.

$EGLR_{ic}$ =Emissions from each Group 1 gasoline loading rack i if the reference control technology had been applied to the uncontrolled emissions. $EGLR_{iu}$ is calculated according to paragraph (h)(4) of this section.

$EGRL2_{iACTUAL}$ =Emissions from each Group 2 gasoline loading rack i that is controlled, calculated according to paragraph (h)(4) of this section.

$EGLR2_{iBASE}$ =Emissions from each Group 2 gasoline loading rack i at the baseline date, as calculated in paragraph (h)(4) of this section.

$EMV1_{iACTUAL}$ =Emissions from each Group 1 marine tank vessel i that is controlled to a level more stringent than the reference control technology, calculated according to paragraph (h)(4) of this section.

$(0.03)EMV1_{iu}$ =Emissions from each Group 1 marine tank vessel i if the reference control technology had been applied to the uncontrolled emissions. $EMV1_{iu}$ is calculated according to paragraph (h)(5) of this section.

$EMV2_{iACTUAL}$ =Emissions from each Group 2 marine tank vessel i that is controlled, calculated according to paragraph (h)(5) of this section.

$EMV2_{iBASE}$ =Emissions from each Group 2 marine tank vessel i at the baseline date, as calculated in paragraph (h)(5) of this section.

$EWW1_{iACTUAL}$ =Emissions from each Group 1 wastewater stream i that is controlled to a level more stringent than the reference control technology, calculated according to paragraph (h)(6) of this section.

$EWW1_{ic}$ =Emissions from each Group 1 wastewater stream i if the reference control technology had been applied to the uncontrolled emissions, calculated according to paragraph (h)(6) of this section.

$EWW2_{iACTUAL}$ =Emissions from each Group 2 wastewater stream i that is controlled, calculated according to paragraph (h)(6) of this section.

$EWW2_{iBASE}$ =Emissions from each Group 2 wastewater stream i at the baseline date, calculated according to paragraph (h)(6) of this section.

n=Number of Group 1 emission points included in the emissions average. The value of n is not necessarily the same for each kind of emission point.

m=Number of Group 2 emission points included in the emissions average. The value of m is not necessarily the same for each kind of emission point.

(i) For an emission point controlled using a reference control technology, the percentage of reduction for calculating credits shall be no greater than the nominal efficiency associated with the reference control technology, unless a higher nominal efficiency is assigned as specified in paragraph (h)(1)(ii) of this section.

(ii) For an emission point controlled to a level more stringent than the reference control technology, the nominal efficiency for calculating credits shall be assigned as described in paragraph (i) of this section. A reference control technology may be approved for use in a different manner and assigned a higher nominal efficiency according to the procedures in paragraph (i) of this section.

(iii) For an emission point controlled using a pollution prevention measure, the nominal efficiency for calculating credits shall be determined as described in paragraph (j) of this section.

(2) Emissions from process vents shall be determined as follows:

(i) Uncontrolled emissions from miscellaneous process vents, $EPV1_{iu}$ , shall be calculated according to the procedures and equation for $EPV_{iu}$ in paragraphs (g)(2)(i) and (g)(2)(ii) of this section.

(ii) Actual emissions from miscellaneous process vents controlled using a technology with an approved nominal efficiency greater than 98 percent or a pollution prevention measure achieving greater than 98 percent emission reduction, $EPV1_{iACTUAL}$ , shall be calculated according to the following equation:

$$EPV1_{iACTUAL} = EPV1_{iu}\left(1 - \frac{Nominal\ efficiency\%}{100\%}\right)$$

(iii) The following procedures shall be used to calculate actual emissions from Group 2 process vents, $EPV2_{iACTUAL}$ :

(A) For a Group 2 process vent controlled by a control device, a recovery device applied as a pollution prevention project, or a pollution prevention measure, if the control achieves a percentage of reduction less than or equal to a 98 percent reduction,

$$EPV2_{iACTUAL} = EPV2_{iu} \times \left(1 - \frac{Percent\ reduction}{100\%}\right)$$

( *1* ) $EPV2_{iu}$ shall be calculated according to the equations and procedures for $EPV_{iu}$ in paragraphs (g)(2)(i) and (g)(2)(ii) of this section except as provided in paragraph (h)(2)(iii)(A)( *3* ) of this section.

( *2* ) The percentage of reduction shall be calculated according to the procedures in paragraphs (g)(2)(iii)(B)( *1* ) through (g)(2)(iii)(B)( *3* ) of this section except as provided in paragraph (h)(2)(iii)(A)( *4* ) of this section.

( *3* ) If a recovery device was added as part of a pollution prevention project, $EPV2_{iu}$ shall be calculated prior to that recovery device. The equation for $EPV_{iu}$ in paragraph (g)(2)(ii) of this section shall be used to calculate $EPV2_{iu}$ ; however, the sampling site for measurement of vent stream flow rate and organic HAP concentration shall be at the inlet of the recovery device.

( *4* ) If a recovery device was added as part of a pollution prevention project, the percentage of reduction shall be demonstrated by conducting a performance test at the inlet and outlet of that recovery device.

(B) For a Group 2 process vent controlled using a technology with an approved nominal efficiency greater than a 98 percent or a pollution prevention measure achieving greater than 98 percent reduction,

$$EPV2_{iACTUAL} = EPV2_{iu}\left(1 - \frac{Nominal\ efficiency\%}{100\%}\right)$$

(iv) Emissions from Group 2 process vents at baseline, $EPV2_{iBASE}$ , shall be calculated as follows:

(A) If the process vent was uncontrolled on November 15, 1990, $EPV2_{iBASE} = EPV2_{iu}$ , and shall be calculated according to the procedures and equation for $EPV_{iu}$ in paragraphs (g)(2)(i) and (g)(2)(ii) of this section.

(B) If the process vent was controlled on November 15, 1990,

$$EPV2_{BASE} = EPV2_{iu}\left(1 - \frac{Percent\ reduction\%}{100\%}\right)$$

where EPV2iu is calculated according to the procedures and equation for EPViu in paragraphs (g)(2)(i) and (g)(2)(ii) of this section. The percentage of reduction shall be calculated according to the procedures specified in paragraphs (g)(2)(iii)(B)( 1 ) through (g)(2)(iii)(B)( 3 ) of this section.

(C) If a recovery device was added to a process vent as part of a pollution prevention project initiated after November 15, 1990, $EPV2_{iBASE} = EPV2_{iu}$ , where $EPV2_{iu}$ is calculated according to paragraph (h)(2)(iii)(A)( *3* ) of this section.

(3) Emissions from storage vessels shall be determined as specified in § 63.150(h)(3) of subpart G, except as follows:

(i) All references to § 63.119(b) in § 63.150(h)(3) of subpart G shall be replaced with: § 63.119 (b) or § 63.119(b) except for § 63.119(b)(5) and (b)(6).

(ii) All references to § 63.119(c) in § 63.150(h)(3) of subpart G shall be replaced with: § 63.119(c) or § 63.119(c) except for § 63.119(c)(2).

(iii) All references to § 63.119(d) in § 63.150(h)(3) of subpart G shall be replaced with: § 63.119(d) or § 63.119(d) except for § 63.119(d)(2).

(4) Emissions from gasoline loading racks shall be determined as follows:

(i) Uncontrolled emissions from Group 1 gasoline loading racks, $EGLR1_{iu}$ , shall be calculated according to the procedures and equations for $EGLR_{iu}$ as described in paragraphs (g)(4)(i) through (g)(4)(iv) of this section.

(ii) Emissions from Group 1 gasoline loading racks if the reference control technology had been applied, $EGLR_{ic}$ , shall be calculated according to the procedures and equations in paragraph (g)(4)(v) of this section.

(iii) Actual emissions from Group 1 gasoline loading racks controlled to less than 10 milligrams of TOC per liter of gasoline loaded; $EGLR_{iACTUAL}$ , shall be calculated according to the following equation:

$$EGLR1_{iACTUAL} = EGLR1_{iu}\left(1 - \frac{Nominal\ efficiency}{100\%}\right)$$

(iv) The following procedures shall be used to calculate actual emissions from Group 2 gasoline loading racks, $EGLR2_{iACTUAL}$ :

(A) For a Group 2 gasoline loading rack controlled by a control device or a pollution prevention measure achieving emissions reduction but where emissions are greater than the 10 milligrams of TOC per liter of gasoline loaded requirement,

$$EGLR2_{iACTUAL} = EGLR2_{iu}\left(1 - \frac{Percent\ \text{reduction}}{100\%}\right)$$

( *1* ) $EGLR2_{iu}$ shall be calculated according to the equations and procedures for $EGLR_{iu}$ in paragraphs (g)(4)(i) through (g)(4)(iv) of this section.

( *2* ) The percentage of reduction shall be calculated according to the procedures in paragraphs (g)(4)(vi)(B)( *1* ) and (g)(4)(vi)(B)( 2 ) of this section.

(B) For a Group 2 gasoline loading rack controlled by using a technology with an approved nominal efficiency greater than 98 percent or a pollution prevention measure achieving greater than a 98-percent reduction,

$$EGLR2_{iACTUAL} = EGLR2_{iu}\left(1 - \frac{\text{Nominal efficiency}}{100\%}\right)$$

(v) Emissions from Group 2 gasoline loading racks at baseline, $EGLR2_{iBASE}$ , shall be calculated as follows:

(A) If the gasoline loading rack was uncontrolled on November 15, 1990, $EGLR2_{iBASE}$ =$EGLR2_{iu}$ , and shall be calculated according to the procedures and equations for $EGLR_{iu}$ in paragraphs (g)(4)(i) through (g)(4)(iv) of this section.

(B) If the gasoline loading rack was controlled on November 15, 1990,

$$EGLR2_{iBASE} = EGLR2_{iu}\left(1 - \frac{Percent\ \text{reduction}}{100\%}\right)$$

where $EGLR2_{iu}$ is calculated according to the procedures and equations for $EGLR_{iu}$ in paragraphs (g)(4)(i) through (g)(4)(iv) of this section. Percentage of reduction shall be calculated according to the procedures in paragraphs (g)(4)(vi)(B)( *1* ) and (g)(4)(vi)(B)( *2* ) of this section.

(5) Emissions from marine tank vessels shall be determined as follows:

(i) Uncontrolled emissions from Group 1 marine tank vessels, $EMV1_{iu}$ , shall be calculated according to the procedures and equations for $EMV_{iu}$ as described in paragraph (g)(5)(i) of this section.

(ii) Actual emissions from Group 1 marine tank vessels controlled using a technology or pollution prevention measure with an approved nominal efficiency greater than 97 percent, EMViACTUAL , shall be calculated according to the following equation:

$$EMV1_{iACTUAL} = EMV1_{iu}\left(1 - \frac{\text{Nominal efficiency}}{100\%}\right)$$

(iii) The following procedures shall be used to calculate actual emissions from Group 2 marine tank vessels, EMV2iACTUAL :

(A) For a Group 2 marine tank vessel controlled by a control device or a pollution prevention measure achieving a percentage of reduction less than or equal to 97 percent reduction,

$$EMV2_{iACTUAL} = EMV2_{iu}\left(1 - \frac{Percent\ \text{reduction}}{100\%}\right)$$

( *1* ) $EMV2_{iu}$ shall be calculated according to the equations and procedures for $EMV_{iu}$ in paragraph (g)(5)(i) of this section.

( *2* ) The percentage of reduction shall be calculated according to the procedures in paragraphs (g)(5)(ii)(B)( *1* ) and (g)(5)(ii)(B)( *2* ) of this section.

(B) For a Group 2 marine tank vessel controlled using a technology or a pollution prevention measure with an approved nominal efficiency greater than 97 percent,

$$EMV2_{iACTUAL} = EMV2_{iu}\left(1 - \frac{\text{Nominal efficiency}}{100\%}\right)$$

(iv) Emissions from Group 2 marine tank vessels at baseline, EMV2iBASE , shall be calculated as follows:

(A) If the marine terminal was uncontrolled on November 15, 1990, EMV2iBASE equals EMV2iu , and shall be calculated according to the procedures and equations for EMViu in paragraph (g)(5)(i) of this section.

(B) If the marine tank vessel was controlled on November 15, 1990,

$$EMV2_{iBASE} = EMV2_{iu}\left(1 - \frac{Percent\ \text{reduction}}{100\%}\right)$$

where $EMV2_{iu}$ is calculated according to the procedures and equations for $EMV_{iu}$ in paragraph (g)(5)(i) of this section. Percentage of reduction shall be calculated according to the procedures in paragraphs (g)(5)(ii)(B)( *1* ) and (g)(5)(ii)(B)( *2* ) of this section.

(6) Emissions from wastewater shall be determined as follows:

(i) For purposes of paragraphs (h)(4)(ii) through (h)(4)(vi) of this section, the following terms will have the meaning given them in paragraphs (h)(6)(i)(A) through (h)(6)(i)(C) of this section.

(A) *Correctly suppressed* means that a wastewater stream is being managed according to the requirements of §§ 61.343 through 61.347 or § 61.342(c)(l)(iii) of 40 CFR part 61, subpart FF, as applicable, and the emissions from the waste management units subject to those requirements are routed to a control device that reduces HAP emissions by 95 percent or greater.

(B) *Treatment process* has the meaning given in § 61.341 of 40 CFR part 61, subpart FF except that it does not include biological treatment units.

(C) *Vapor control device* means the control device that receives emissions vented from a treatment process or treatment processes.

(ii) The following equation shall be used for each wastewater stream i to calculate $EWW_{ic}$ :

$$EWW_{ic} = \left(6.0*10^{-8}\right) Q_i\, H_i \sum_{m=1}^{s} \left(1 - Fr_m\right) Fe_m HAP_{im} + \left(0.05\right)\left(6.0*10^{-8}\right) Q_i\, H_i \sum_{m=1}^{s} \left(Fr_m HAP_{im}\right)$$

where:

$EWW_{ic}$ = Monthly wastewater stream emission rate if wastewater stream i were controlled by the reference control technology, megagrams per month.

$Q_i$ = Average flow rate for wastewater stream i, liters per minute.

$H_i$ = Number of hours during the month that wastewater stream i was generated, hours per month.

$Fr_m$ =Fraction removed of organic HAP m in wastewater, from table 7 of this subpart, dimensionless.

$Fe_m$ =Fraction emitted of organic HAP m in wastewater from table 7 of this subpart, dimensionless.

s=Total number of organic HAP's in wastewater stream i.

$HAP_{im}$ =Average concentration of organic HAP m in wastewater stream i, parts per million by weight.

(A) $HAP_{im}$ shall be determined for the point of generation or at a location downstream of the point of generation. Wastewater samples shall be collected using the sampling procedures specified in Method 25D of 40 CFR part 60, appendix A. Where feasible, samples shall be taken from an enclosed pipe prior to the wastewater being exposed to the atmosphere. When sampling from an enclosed pipe is not feasible, a minimum of three representative samples shall be collected in a manner to minimize exposure of the sample to the atmosphere and loss of organic HAP's prior to sampling. The samples collected may be analyzed by either of the following procedures:

( *1* ) A test method or results from a test method that measures organic HAP concentrations in the wastewater, and that has been validated pursuant to section 5.1 or 5.3 of Method 301 of appendix A of this part may be used; or

( *2* ) Method 305 of appendix A of this part may be used to determine $C_{im}$ , the average volatile organic HAP concentration of organic HAP m in wastewater stream i, and then $HAP_{im}$ may be calculated using the following equation: $HAP_{im} = C_{im} / Fm_m$ , where $Fm_m$ for organic HAP m is obtained from table 7 of this subpart.

(B) Values for $Q_i$ , $HAP_{im}$ , and $C_{im}$ shall be determined during a performance test conducted under representative conditions. The average value obtained from three test runs shall be used. The values of $Q_i$ , $HAP_{im}$ , and $C_{im}$ shall be established in the Notification of Compliance Status report and must be updated as provided in paragraph (h)(6)(i)(C) of this section.

(C) If there is a change to the process or operation such that the previously measured values of $Q_i$ , $HAP_{im}$ , and $C_{im}$ are no longer representative, a new performance test shall be conducted to determine new representative values of $Q_i$ , $HAP_{im}$ , and $C_{im}$ . These new values shall be used to calculate debits and credits from the time of the change forward, and the new values shall be reported in the next Periodic Report.

(iii) The following equations shall be used to calculate $EWW1_{iACTUAL}$ for each Group 1 wastewater stream i that is correctly suppressed and is treated to a level more stringent than the reference control technology.

(A) If the Group 1 wastewater stream i is controlled using a treatment process or series of treatment processes with an approved nominal reduction efficiency for an individually speciated HAP that is greater than that specified in table 7 of this subpart, and the vapor control device achieves a percentage of reduction equal to 95 percent, the following equation shall be used:

$$EWW1_{iACTUAL} = \left(6.0*10^{-8}\right) Q_i H_i \sum_{m=1}^{5} \left[ Fe_m HAP_{im} \left(1 - PR_{im}\right) \right] + 0.05 \left(6.0*10^{-8}\right) Q_i H_i \sum_{m=1}^{5} \left[ HAP_{im} PR_{im} \right]$$

Where:

$EWW_{iACTUAL}$ =Monthly wastewater stream emission rate if wastewater stream i is treated to a level more stringent than the reference control technology, megagrams per month.

$PR_{im}$ =The efficiency of the treatment process, or series of treatment processes, that treat wastewater stream i in reducing the emission potential of organic HAP m in wastewater, dimensionless, as calculated by:

$$PR_{im} = \frac{HAP_{im\text{-}in} - HAP_{im\text{-}out}}{HAP_{im\text{-}in}}$$

Where:

$HAP_{im\text{-}in}$ =Average concentration of organic HAP m, parts per million by weight, as defined and determined according to paragraph (h)(6)(ii)(A) of this section, in the wastewater entering the first treatment process in the series.

$HAP_{im\text{-}out}$ =Average concentration of organic HAP m, parts per million by weight, as defined and determined according to paragraph (h)(6)(ii)(A) of this section, in the wastewater exiting the last treatment process in the series.

All other terms are as defined and determined in paragraph (h)(6)(ii) of this section.

(B) If the Group 1 wastewater stream i is not controlled using a treatment process or series of treatment processes with an approved nominal reduction efficiency for an individually speciated HAP that is greater than that specified in

table 7 of this subpart, but the vapor control device has an approved nominal efficiency greater than 95 percent, the following equation shall be used:

$$EWW1_{iACTUAL} = \left(6.0*10^{-8}\right) Q_i\, H_i \sum_{m=1}^{s} \left[Fe_m HAP_{im}\left(1-A_m\right)\right] + \left(1-\frac{\text{Nominal efficiency \%}}{100}\right)\left(6.0*10^{-8}\right) Q_i\, H_i \sum_{m=1}^{s} \left[HAP_{im} A_m\right]$$

Where:

Nominal efficiency=Approved reduction efficiency of the vapor control device, dimensionless, as determined according to the procedures in § 63.652(i).

$A_m$ =The efficiency of the treatment process, or series of treatment processes, that treat wastewater stream i in reducing the emission potential of organic HAP m in wastewater, dimensionless.

All other terms are as defined and determined in paragraphs (h)(6)(ii) and (h)(6)(iii)(A) of this section.

( *1* ) If a steam stripper meeting the specifications in the definition of reference control technology for wastewater is used, $A_m$ shall be equal to the value of $Fr_m$ given in table 7 of this subpart.

( *2* ) If an alternative control device is used, the percentage of reduction must be determined using the equation and methods specified in paragraph (h)(6)(iii)(A) of this section for determining $PR_{im}$ . If the value of $PR_{im}$ is greater than or equal to the value of $Fr_m$ given in table 7 of this subpart, then $A_m$ equals $Fr_m$ unless a higher nominal efficiency has been approved. If a higher nominal efficiency has been approved for the treatment process, the owner or operator shall determine $EWW1_{iACTUAL}$ according to paragraph (h)(6)(iii)(B) of this section rather than paragraph (h)(6)(iii)(A) of this section. If $PR_{im}$ is less than the value of $FR_m$ given in table 7 of this subpart, emissions averaging shall not be used for this emission point.

(C) If the Group 1 wastewater stream i is controlled using a treatment process or series of treatment processes with an approved nominal reduction efficiency for an individually speciated hazardous air pollutant that is greater than that specified in table 7 of this subpart, and the vapor control device has an approved nominal efficiency greater than 95 percent, the following equation shall be used:

$$EWW1_{iACTUAL} = \left(6.0*10^{-8}\right) Q_i H_i \sum_{m=1}^{s} \left[Fe_m HAP_{im}\left(1-PR_{im}\right)\right] + \left(1-\frac{\text{Nominal efficiency \%}}{100}\right)\left(6.0*10^{-8}\right) Q_i\, H_i \sum_{m=1}^{s} \left[HAP_{im} PR_{im}\right]$$

where all terms are as defined and determined in paragraphs (h)(6)(ii) and (h)(6)(iii)(A) of this section.

(iv) The following equation shall be used to calculate $EWW2_{iBASE}$ for each Group 2 wastewater stream i that on November 15, 1990 was not correctly suppressed or was correctly suppressed but not treated:

$$EWW2_{iBASE} = \left(6.0\times10^{-8}\right) Q_i\, H_i \sum_{m=1}^{s} Fe_m HAP_{im}$$

Where:

$EWW2_{iBASE}$ =Monthly wastewater stream emission rate if wastewater stream i is not correctly suppressed, megagrams per month.

$Q_i$ , $H_i$ , s, $Fe_m$ , and $HAP_{im}$ are as defined and determined according to paragraphs (h)(6)(ii) and (h)(6)(iii)(A) of this section.

(v) The following equation shall be used to calculate $EWW2_{iBASE}$ for each Group 2 wastewater stream i on November 15, 1990 was correctly suppressed. $EWW2_{iBASE}$ shall be calculated as if the control methods being used on November 15, 1990 are in place and any control methods applied after November 15, 1990 are ignored. However, values for the parameters in the equation shall be representative of present production levels and stream properties.

$$EWW2_{iBASE} = \left(6.0*10^{-8}\right) Q_i\, H_i \sum_{m=1}^{5} \left[Fe_m HAP_{im}\left(1-PR_{im}\right)\right] + \left(1-\frac{R_i}{100\%}\right)\left(6.0*10^{-8}\right) Q_i\, H_i \sum_{m=1}^{5}\left[HAP_{im} PR_{im}\right]$$

where $R_i$ is calculated according to paragraph (h)(6)(vii) of this section and all other terms are as defined and determined according to paragraphs (h)(6)(ii) and (h)(6)(iii)(A) of this section.

(vi) For Group 2 wastewater streams that are correctly suppressed, $EWW2_{iACTUAL}$ shall be calculated according to the equation for $EWW2_{iBASE}$ in paragraph (h)(6)(v) of this section. $EWW2_{iACTUAL}$ shall be calculated with all control methods in place accounted for.

(vii) The reduction efficiency, $R_i$ , of the vapor control device shall be demonstrated according to the following procedures:

(A) Sampling sites shall be selected using Method 1 or 1A of 40 CFR part 60, appendix A, as appropriate.

(B) The mass flow rate of organic compounds entering and exiting the control device shall be determined as follows:

( *1* ) The time period for the test shall not be less than 3 hours during which at least three runs are conducted.

( *2* ) A run shall consist of a 1-hour period during the test. For each run:

( *i* ) The volume exhausted shall be determined using Methods 2, 2A, 2C, or 2D of 40 CFR part 60 appendix A, as appropriate;

( *ii* ) The organic concentration in the vent stream entering and exiting the control device shall be determined using Method 18 of 40 CFR part 60, appendix A. Alternatively, any other test method validated according to the procedures in Method 301 of appendix A of this part may be used.

( *3* ) The mass flow rate of organic compounds entering and exiting the control device during each run shall be calculated as follows:

$$E_a = \frac{0.0416}{10^6 \times m}\left[\sum_{p=1}^{m} V_{ap}\left(\sum_{p=1}^{n} C_{aip} MW_i\right)\right]$$

$$E_b = \frac{0.0416}{10^6 \times m}\left[\sum_{p=1}^{m} V_{bp}\left(\sum_{p=1}^{n} C_{bip} MW_i\right)\right]$$

Where:

$E_a$ =Mass flow rate of organic compounds exiting the control device, kilograms per hour.

$E_b$ =Mass flow rate of organic compounds entering the control device, kilograms per hour.

$V_{ap}$ =Average volumetric flow rate of vent stream exiting the control device during run p at standards conditions, cubic meters per hour.

$V_{bp}$ = Average volumetric flow rate of vent stream entering the control device during run p at standards conditions, cubic meters per hour.

p = Run.

m = Number of runs.

$C_{aip}$ = Concentration of organic compound i measured in the vent stream exiting the control device during run p as determined by Method 18 of 40 CFR part 60 appendix A, parts per million by volume on a dry basis.

$C_{bip}$ = Concentration of organic compound i measured in the vent stream entering the control device during run p as determined by Method 18 of 40 CFR part 60, appendix A, parts per million by volume on a dry basis.

$MW_i$ = Molecular weight of organic compound i in the vent stream, kilograms per kilogram-mole.

n = Number of organic compounds in the vent stream.

0.0416 = Conversion factor for molar volume, kilograms-mole per cubic meter at 293 kelvin and 760 millimeters mercury absolute.

(C) The organic reduction efficiency for the control device shall be calculated as follows:

$$R = \frac{E_b - E_a}{E_b} \times 100$$

Where:

R = Total organic reduction efficiency for the control device, percentage.

$E_b$ = Mass flow rate of organic compounds entering the control device, kilograms per hour.

$E_a$ = Mass flow rate of organic compounds exiting the control device, kilograms per hour.

(i) The following procedures shall be followed to establish nominal efficiencies. The procedures in paragraphs (i)(1) through (i)(6) of this section shall be followed for control technologies that are different in use or design from the reference control technologies and achieve greater percentages of reduction than the percentages of efficiency assigned to the reference control technologies in § 63.641.

(1) In those cases where the owner or operator is seeking permission to take credit for use of a control technology that is different in use or design from the reference control technology, and the different control technology will be used in more than three applications at a single plant site, the owner or operator shall submit the information specified in paragraphs (i)(1)(i) through (i)(1)(iv) of this section to the Administrator in writing:

(i) Emission stream characteristics of each emission point to which the control technology is or will be applied including the kind of emission point, flow, organic HAP concentration, and all other stream characteristics necessary to design the control technology or determine its performance;

(ii) Description of the control technology including design specifications;

(iii) Documentation demonstrating to the Administrator's satisfaction the control efficiency of the control technology. This may include performance test data collected using an appropriate EPA method or any other method validated

according to Method 301 of appendix A of this part. If it is infeasible to obtain test data, documentation may include a design evaluation and calculations. The engineering basis of the calculation procedures and all inputs and assumptions made in the calculations shall be documented; and

(iv) A description of the parameter or parameters to be monitored to ensure that the control technology will be operated in conformance with its design and an explanation of the criteria used for selection of that parameter (or parameters).

(2) The Administrator shall determine within 120 calendar days whether an application presents sufficient information to determine nominal efficiency. The Administrator reserves the right to request specific data in addition to the items listed in paragraph (i)(1) of this section.

(3) The Administrator shall determine within 120 calendar days of the submittal of sufficient data whether a control technology shall have a nominal efficiency and the level of that nominal efficiency. If, in the Administrator's judgment, the control technology achieves a level of emission reduction greater than the reference control technology for a particular kind of emission point, the Administrator will publish a FEDERAL REGISTER notice establishing a nominal efficiency for the control technology.

(4) The Administrator may grant conditional permission to take emission credits for use of the control technology on requirements that may be necessary to ensure operation and maintenance to achieve the specified nominal efficiency.

(5) In those cases where the owner or operator is seeking permission to take credit for use of a control technology that is different in use or design from the reference control technology and the different control technology will be used in no more than three applications at a single plant site, the information listed in paragraphs (i)(1)(i) through (i)(1)(iv) of this section can be submitted to the permitting authority for the source for approval instead of the Administrator.

(i) In these instances, use and conditions for use of the control technology can be approved by the permitting authority. The permitting authority shall follow the procedures specified in paragraphs (i)(2) through (i)(4) of this section except that, in these instances, a FEDERAL REGISTER notice is not required to establish the nominal efficiency for the different technology.

(ii) If, in reviewing the submittal, the permitting authority believes the control technology has broad applicability for use by other sources, the permitting authority shall submit the information provided in the application to the Director of the EPA Office of Air Quality Planning and Standards. The Administrator shall review the technology for broad applicability and may publish a FEDERAL REGISTER notice; however, this review shall not affect the permitting authority's approval of the nominal efficiency of the control technology for the specific application.

(6) If, in reviewing an application for a control technology for an emission point, the Administrator or permitting authority determines the control technology is not different in use or design from the reference control technology, the Administrator or permitting authority shall deny the application.

(j) The following procedures shall be used for calculating the efficiency (percentage of reduction) of pollution prevention measures:

(1) A pollution prevention measure is any practice that meets the criteria of paragraphs (j)(1)(i) and (j)(1)(ii) of this section.

(i) A pollution prevention measure is any practice that results in a lesser quantity of organic HAP emissions per unit of product released to the atmosphere prior to out-of-process recycling, treatment, or control of emissions while the same product is produced.

(ii) Pollution prevention measures may include: Substitution of feedstocks that reduce HAP emissions, alterations to the production process to reduce the volume of materials released to the environment, equipment modifications; housekeeping measures, and in-process recycling that returns waste materials directly to production as raw materials. Production cutbacks do not qualify as pollution prevention.

(2) The emission reduction efficiency of pollution prevention measures implemented after November 15, 1990 can be used in calculating the actual emissions from an emission point in the debit and credit equations in paragraphs (g) and (h) of this section.

(i) For pollution prevention measures, the percentage of reduction used in the equations in paragraphs (g)(2) and (g)(3) of this section and paragraphs (h)(2) through (h)(4) of this section is the difference in percentage between the monthly organic HAP emissions for each emission point after the pollution prevention measure for the most recent month versus monthly emissions from the same emission point before the pollution prevention measure, adjusted by the volume of product produced during the two monthly periods.

(ii) The following equation shall be used to calculate the percentage of reduction of a pollution prevention measure for each emission point.

$$\text{Percent reduction} = \frac{E_B \dfrac{\left(E_{pp} \times P_B\right)}{P_{pp}}}{E_B} \times 100\%$$

Where:

Percent reduction=Efficiency of pollution prevention measure (percentage of organic HAP reduction).

$E_B$ =Monthly emissions before the pollution prevention measure, megagrams per month, determined as specified in paragraphs (j)(2)(ii)(A), (j)(2)(ii)(B), and (j)(2)(ii)(C) of this section.

$E_{pp}$ =Monthly emissions after the pollution prevention measure, megagrams per month, as determined for the most recent month, determined as specified in paragraphs (j)(2)(ii)(D) or (j)(2)(ii)(E) of this section.

$P_B$ =Monthly production before the pollution prevention measure, megagrams per month, during the same period over which $E_B$ is calculated.

$P_{pp}$ =Monthly production after the pollution prevention measure, megagrams per month, as determined for the most recent month.

(A) The monthly emissions before the pollution prevention measure, $E_B$ , shall be determined in a manner consistent with the equations and procedures in paragraphs (g)(2), (g)(3), (g)(4), and (g)(5) of this section for miscellaneous process vents, storage vessels, gasoline loading racks, and marine tank vessels.

(B) For wastewater, $E_B$ shall be calculated as follows:

$$E_B = \sum_{i=1}^{n} \left[ \left(6.0 * 10^{-8}\right) Q_{Bi} \, H_{Bi} \sum_{m=1}^{s} Fe_m HAP_{Bim} \right]$$

where:

n=Number of wastewater streams.

$Q_{Bi}$ =Average flow rate for wastewater stream i before the pollution prevention measure, liters per minute.

$H_{Bi}$ =Number of hours per month that wastewater stream i was discharged before the pollution prevention measure, hours per month.

s=Total number of organic HAP's in wastewater stream i.

$Fe_m$ =Fraction emitted of organic HAP m in wastewater from table 7 of this subpart, dimensionless.

$HAP_{Bim}$ =Average concentration of organic HAP m in wastewater stream i, defined and determined according to paragraph (h)(6)(ii)(A)( *2* ) of this section, before the pollution prevention measure, parts per million by weight, as measured before the implementation of the pollution measure.

(C) If the pollution prevention measure was implemented prior to July 14, 1994, records may be used to determine $E_B$ .

(D) The monthly emissions after the pollution prevention measure, $E_{pp}$ , may be determined during a performance test or by a design evaluation and documented engineering calculations. Once an emissions-to-production ratio has been established, the ratio can be used to estimate monthly emissions from monthly production records.

(E) For wastewater, $E_{pp}$ shall be calculated using the following equation:

$$E_{pp} = \sum_{i=1}^{n} \left[ \left(6.0 * 10^{-8}\right) Q_{ppi} \, H_{ppi} \sum_{m=1}^{s} Fe_m HAP_{ppim} \right]$$

where n, Q, H, s, $Fe_m$ , and HAP are defined and determined as described in paragraph (j)(2)(ii)(B) of this section except that $Q_{ppi}$ , $H_{ppi}$ , and $HAP_{ppim}$ shall be determined after the pollution prevention measure has been implemented.

(iii) All equations, calculations, test procedures, test results, and other information used to determine the percentage of reduction achieved by a pollution prevention measure for each emission point shall be fully documented.

(iv) The same pollution prevention measure may reduce emissions from multiple emission points. In such cases, the percentage of reduction in emissions for each emission point must be calculated.

(v) For the purposes of the equations in paragraphs (h)(2) through (h)(6) of this section used to calculate credits for emission points controlled more stringently than the reference control technology, the nominal efficiency of a pollution prevention measure is equivalent to the percentage of reduction of the pollution prevention measure. When a pollution prevention measure is used, the owner or operator of a source is not required to apply to the Administrator for a nominal efficiency and is not subject to paragraph (i) of this section.

(k) The owner or operator shall demonstrate that the emissions from the emission points proposed to be included in the average will not result in greater hazard or, at the option of the State or local permitting authority, greater risk to human health or the environment than if the emission points were controlled according to the provisions in §§ 63.643 through 63.647, and §§ 63.650 and 63.651.

(1) This demonstration of hazard or risk equivalency shall be made to the satisfaction of the State or local permitting authority.

(i) The State or local permitting authority may require owners and operators to use specific methodologies and procedures for making a hazard or risk determination.

(ii) The demonstration and approval of hazard or risk equivalency may be made according to any guidance that the EPA makes available for use.

(2) Owners and operators shall provide documentation demonstrating the hazard or risk equivalency of their proposed emissions average in their Implementation Plan.

(3) An emissions averaging plan that does not demonstrate an equivalent or lower hazard or risk to the satisfaction of the State or local permitting authority shall not be approved. The State or local permitting authority may require such

adjustments to the emissions averaging plan as are necessary in order to ensure that the average will not result in greater hazard or risk to human health or the environment than would result if the emission points were controlled according to §§ 63.643 through 63.647, and §§ 63.650 and 63.651.

(4) A hazard or risk equivalency demonstration shall:

(i) Be a quantitative, bona fide chemical hazard or risk assessment;

(ii) Account for differences in chemical hazard or risk to human health or the environment; and

(iii) Meet any requirements set by the State or local permitting authority for such demonstrations.

(l) For periods of excess emissions, an owner or operator may request that the provisions of paragraphs (l)(1) through (l)(4) of this section be followed instead of the procedures in paragraphs (f)(3)(i) and (f)(3)(ii) of this section.

(1) The owner or operator shall notify the Administrator of excess emissions in the Periodic Reports as required in § 63.655(g)(6).

(2) The owner or operator shall demonstrate that other types of monitoring data or engineering calculations are appropriate to establish that the control device for the emission point was operating in such a fashion to warrant assigning full or partial credits and debits. This demonstration shall be made to the Administrator's satisfaction, and the Administrator may establish procedures for demonstrating compliance that are acceptable.

(3) The owner or operator shall provide documentation of the period of excess emissions and the other type of monitoring data or engineering calculations to be used to demonstrate that the control device for the emission point was operating in such a fashion to warrant assigning full or partial credits and debits.

(4) The Administrator may assign full or partial credit and debits upon review of the information provided.

[60 FR 43260, Aug. 18, 1995; 60 FR 49976, Sept. 27, 1995; 61 FR 7051, Feb. 23, 1996, as amended at 61 FR 29881, June 12, 1996; 61 FR 33799, June 28, 1996; 74 FR 55686, Oct. 28, 2009]

**§ 63.653 Monitoring, recordkeeping, and implementation plan for emissions averaging.**

(a) For each emission point included in an emissions average, the owner or operator shall perform testing, monitoring, recordkeeping, and reporting equivalent to that required for Group 1 emission points complying with §§ 63.643 through 63.647, and §§ 63.650 and 63.651. The specific requirements for miscellaneous process vents, storage vessels, wastewater, gasoline loading racks, and marine tank vessels are identified in paragraphs (a)(1) through (a)(7) of this section.

(1) The source shall implement the following testing, monitoring, recordkeeping, and reporting procedures for each miscellaneous process vent equipped with a flare, incinerator, boiler, or process heater:

(i) Conduct initial performance tests to determine the percentage of reduction as specified in § 63.645 of this subpart and § 63.116 of subpart G; and

(ii) Monitor the operating parameters specified in § 63.644, as appropriate for the specific control device.

(2) The source shall implement the following procedures for each miscellaneous process vent, equipped with a carbon adsorber, absorber, or condenser but not equipped with a control device:

(i) Determine the flow rate and organic HAP concentration using the methods specified in § 63.115 (a)(1) and (a)(2), § 63.115 (b)(1) and (b)(2), and § 63.115(c)(3) of subpart G; and

(ii) Monitor the operating parameters specified in § 63.114 of subpart G, as appropriate for the specific recovery device.

(3) The source shall implement the following procedures for each storage vessel controlled with an internal floating roof, external roof, or a closed vent system with a control device, as appropriate to the control technique:

(i) Perform the monitoring or inspection procedures in § 63.646 of this subpart and § 63.120 of subpart G; and

(ii) For closed vent systems with control devices, conduct an initial design evaluation as specified in § 63.646 of this subpart and § 63.120(d) of subpart G.

(4) For each gasoline loading rack that is controlled, perform the testing and monitoring procedures specified in §§ 63.425 and 63.427 of subpart R of this part except § 63.425(d) or § 63.427(c).

(5) For each marine tank vessel that is controlled, perform the compliance, monitoring, and performance testing, procedures specified in §§ 63.563, 63.564, and 63.565 of subpart Y of this part.

(6) The source shall implement the following procedures for wastewater emission points, as appropriate to the control techniques:

(i) For wastewater treatment processes, conduct tests as specified in § 61.355 of subpart FF of part 60;

(ii) Conduct inspections and monitoring as specified in §§ 61.343 through 61.349 and § 61.354 of 40 CFR part 61, subpart FF.

(7) If an emission point in an emissions average is controlled using a pollution prevention measure or a device or technique for which no monitoring parameters or inspection procedures are specified in §§ 63.643 through 63.647 and §§ 63.650 and 63.651, the owner or operator shall establish a site-specific monitoring parameter and shall submit the information specified in § 63.655(h)(4) in the Implementation Plan.

(b) Records of all information required to calculate emission debits and credits and records required by § 63.655 shall be retained for 5 years.

(c) Notifications of Compliance Status report, Periodic Reports, and other reports shall be submitted as required by § 63.655.

(d) Each owner or operator of an existing source who elects to comply with § 63.655(g) and (h) by using emissions averaging for any emission points shall submit an Implementation Plan.

(1) The Implementation Plan shall be submitted to the Administrator and approved prior to implementing emissions averaging. This information may be submitted in an operating permit application, in an amendment to an operating permit application, in a separate submittal, in a Notification of Compliance Status Report, in a Periodic Report or in any combination of these documents. If an owner or operator submits the information specified in paragraph (d)(2) of this section at different times, and/or in different submittals, later submittals may refer to earlier submittals instead of duplicating the previously submitted information.

(2) The Implementation Plan shall include the information specified in paragraphs (d)(2)(i) through (d)(2)(ix) of this section for all points included in the average.

(i) The identification of all emission points in the planned emissions average and notation of whether each emission point is a Group 1 or Group 2 emission point as defined in § 63.641.

(ii) The projected annual emission debits and credits for each emission point and the sum for the emission points involved in the average calculated according to § 63.652. The annual projected credits must be greater than the projected debits, as required under § 63.652(e)(3).

(iii) The specific control technology or pollution prevention measure that will be used for each emission point included in the average and date of application or expected date of application.

(iv) The specific identification of each emission point affected by a pollution prevention measure. To be considered a pollution prevention measure, the criteria in § 63.652(j)(1) must be met. If the same pollution prevention measure reduces or eliminates emissions from multiple emission points in the average, the owner or operator must identify each of these emission points.

(v) A statement that the compliance demonstration, monitoring, inspection, recordkeeping, and reporting provisions in paragraphs (a), (b), and (c) of this section that are applicable to each emission point in the emissions average will be implemented beginning on the date of compliance.

(vi) Documentation of the information listed in paragraphs (d)(2)(vi)(A) through (d)(2)(vi)(D) of this section for each emission point included in the average.

(A) The values of the parameters used to determine whether each emission point in the emissions average is Group 1 or Group 2.

(B) The estimated values of all parameters needed for input to the emission debit and credit calculations in § 63.652 (g) and (h). These parameter values or, as appropriate, limited ranges for the parameter values, shall be specified in the source's Implementation Plan as enforceable operating conditions. Changes to these parameters must be reported in the next Periodic Report.

(C) The estimated percentage of reduction if a control technology achieving a lower percentage of reduction than the efficiency of the reference control technology, as defined in § 63.641, is or will be applied to the emission point.

(D) The anticipated nominal efficiency if a control technology achieving a greater percentage emission reduction than the efficiency of the reference control technology is or will be applied to the emission point. The procedures in § 63.652(i) shall be followed to apply for a nominal efficiency.

(vii) The information specified in § 63.655(h)(4) for:

(A) Each miscellaneous process vent controlled by a pollution prevention measure or control technique for which monitoring parameters or inspection procedures are not specified in paragraphs (a)(1) or (a)(2) of this section; and

(B) Each storage vessel controlled by a pollution prevention measure or a control technique other than an internal or external floating roof or a closed vent system with a control device.

(viii) Documentation of the information listed in paragraphs (d)(2)(viii)(A) through (d)(2)(viii)(G) of this section for each process wastewater stream included in the average.

(A) The information used to determine whether the wastewater stream is a Group 1 or Group 2 wastewater stream.

(B) The estimated values of all parameters needed for input to the wastewater emission credit and debit calculations in § 63.652(h)(6).

(C) The estimated percentage of reduction if the wastewater stream is or will be controlled using a treatment process or series of treatment processes that achieves an emission reduction less than or equal to the emission reduction specified in table 7 of this subpart.

(D) The estimated percentage of reduction if a control technology achieving less than or equal to 95 percent emission reduction is or will be applied to the vapor stream(s) vented and collected from the treatment processes.

(E) The estimated percentage of reduction if a pollution prevention measure is or will be applied.

(F) The anticipated nominal efficiency if the owner or operator plans to apply for a nominal efficiency under § 63.652(i). A nominal efficiency shall be applied for if:

( *1* ) A control technology is or will be applied to the wastewater stream and achieves an emission reduction greater than the emission reduction specified in table 7 of this subpart; or

( *2* ) A control technology achieving greater than 95 percent emission reduction is or will be applied to the vapor stream(s) vented and collected from the treatment processes.

(G) For each pollution prevention measure, treatment process, or control device used to reduce air emissions of organic HAP from wastewater and for which no monitoring parameters or inspection procedures are specified in § 63.647, the information specified in § 63.655(h)(4) shall be included in the Implementation Plan.

(ix) Documentation required in § 63.652(k) demonstrating the hazard or risk equivalency of the proposed emissions average.

(3) The Administrator shall determine within 120 calendar days whether the Implementation Plan submitted presents sufficient information. The Administrator shall either approve the Implementation Plan, request changes, or request that the owner or operator submit additional information. Once the Administrator receives sufficient information, the Administrator shall approve, disapprove, or request changes to the plan within 120 calendar days.

[60 FR 43260, Aug. 18, 1995, as amended at 61 FR 29881, June 12, 1996; 63 FR 31361, June 9, 1998; 74 FR 55686, Oct. 28, 2009]

**§ 63.654 Heat exchange systems.**

(a) Except as specified in paragraph (b) of this section, the owner or operator of a heat exchange system that meets the criteria in § 63.640(c)(8) must comply with the requirements of paragraphs (c) through (g) of this section.

(b) A heat exchange system is exempt from the requirements in paragraphs (c) through (g) of this section if it meets any one of the criteria in paragraphs (b)(1) through (2) of this section.

(1) All heat exchangers that are in organic HAP service within the heat exchange system that either:

(i) Operate with the minimum pressure on the cooling water side at least 35 kilopascals greater than the maximum pressure on the process side; or

(ii) Employ an intervening cooling fluid, containing less than 5 percent by weight of total HAP listed in Table 1 to this subpart, between the process and the cooling water. This intervening fluid must serve to isolate the cooling water from the process fluid and must not be sent through a cooling tower or discharged. For purposes of this section, discharge does not include emptying for maintenance purposes.

(2) The heat exchange system cools process fluids that contain less than 5 percent by weight of total HAP listed in Table 1 to this subpart (i.e., the heat exchange system does not contain any heat exchangers that are in organic HAP service as defined in this subpart).

(c) The owner or operator must perform monthly monitoring to identify leaks of total strippable volatile organic compound (VOC) from each heat exchange system subject to the requirements of this subpart according to the procedures in paragraphs (c)(1) and (2) of this section.

(1) Collect and analyze a sample from each cooling tower return line prior to exposure to air for each heat exchange system in organic HAP service or from each heat exchanger exit line for each heat exchanger or group of heat exchangers in organic HAP service within that heat exchange system to determine the total strippable VOC concentration (as methane) from the air stripping testing system using “Air Stripping Method (Modified El Paso Method) for Determination of Volatile Organic Compound Emissions from Water Sources” Revision Number One, dated January 2003, Sampling Procedures Manual, Appendix P: Cooling Tower Monitoring, prepared by Texas Commission on Environmental Quality, January 31, 2003 (incorporated by reference—see § 63.14). The owner or operator of a once-through heat exchange system may elect to also monitor monthly (in addition to monitoring each heat exchanger exit line) the fresh water feed line prior to any heat exchanger to determine the total strippable VOC concentration (as methane) prior to the heat exchange system using the Modified El Paso Method.

(2) For a heat exchange system at an existing source, a leak is a total strippable VOC concentration (as methane) in the stripping gas of 6.2 ppmv or greater. For a heat exchange system at a new source, a leak is a total strippable VOC concentration (as methane) in the stripping gas of 3.1 ppmv or greater.

(d) If a leak is detected, the owner or operator must repair the leak to reduce the measured concentration to below the applicable action level as soon as practicable, but no later than 45 days after identifying the leak, except as specified in paragraphs (e) and (f) of this section. Actions that can be taken to achieve repair include but are not limited to:

(1) Physical modifications to the leaking heat exchanger, such as welding the leak or replacing a tube;

(2) Blocking the leaking tube within the heat exchanger;

(3) Changing the pressure so that water flows into the process fluid;

(4) Replacing the heat exchanger or heat exchanger bundle; or

(5) Isolating, bypassing, or otherwise removing the leaking heat exchanger from service until it is otherwise repaired.

(e) If the owner or operator detects a leak when monitoring a cooling tower return line under paragraph (c)(1) of this section, the owner or operator may conduct additional monitoring to identify leaks of total strippable VOC emissions using Modified El Paso Method from each heat exchanger or group of heat exchangers in organic HAP service associated with the heat exchange system for which the leak was detected. If the additional monitoring shows that the total strippable VOC concentration in the stripped air at the heat exchanger exit line for each heat exchanger in organic HAP service is less than 6.2 ppmv for existing sources or less than 3.1 ppmv for new sources, the heat exchange system is excluded from repair requirements in paragraph (d) of this section.

(f) The owner or operator may delay the repair of a leaking heat exchanger when one of the conditions in paragraphs (f)(1) and (2) of this section is met. The owner or operator must determine if a delay of repair is necessary as soon as practicable, but no later than 45 days after first identifying the leak.

(1) If the repair is technically infeasible without a shutdown and the total strippable VOC concentration (as methane) is initially and remains less than 62 ppmv for all monthly monitoring periods during the delay of repair, the owner or operator may delay repair until the next scheduled shutdown of the heat exchange system. If, during subsequent monthly monitoring, the total strippable VOC concentration (as methane) is 62 ppmv or greater, the owner or operator must repair the leak within 30 days of the monitoring event in which the leak was equal to or exceeded 62 ppmv total strippable VOC (as methane), except as provided in paragraph (f)(3) of this section.

(2) If the necessary equipment, parts, or personnel are not available and the total strippable VOC concentration (as methane) is initially and remains less than 62 ppmv for all monthly monitoring periods during the delay of repair, the owner or operator may delay the repair for a maximum of 120 calendar days. The owner or operator must demonstrate that the necessary equipment, parts, or personnel were not available. If, during subsequent monthly monitoring, the total strippable VOC concentration (as methane) is 62 ppmv or greater, the owner or operator must repair the leak within 30 days of the monitoring event in which the leak was equal to or exceeded 62 ppmv total strippable VOC (as methane).

(g) To delay the repair under paragraph (f) of this section, the owner or operator must record the information in paragraphs (g)(1) through (g)(4) of this section.

(1) The reason(s) for delaying repair.

(2) A schedule for completing the repair as soon as practical.

(3) The date and concentration of the leak as first identified and the results of all subsequent monthly monitoring events during the delay of repair.

(4) An estimate of the potential emissions from the leaking heat exchange system or heat exchanger following the procedures in paragraphs (g)(4)(i) and (g)(4)(ii) of this section.

(i) Determine the total strippable VOC concentration in the cooling water, in parts per million by weight (ppmw), using equation 7-1 from “Air Stripping Method (Modified El Paso Method) for Determination of Volatile Organic Compound Emissions from Water Sources” Revision Number One, dated January 2003, Sampling Procedures Manual, Appendix P: Cooling Tower Monitoring, prepared by Texas Commission on Environmental Quality, January 31, 2003 (incorporated by reference—see § 63.14), based on the total strippable concentration in the stripped air, ppmv, from monitoring.

(ii) Calculate the VOC emissions for the leaking heat exchange system or heat exchanger by multiplying the VOC concentration in the cooling water, ppmw, by the flow rate of the cooling water from the leaking tower or heat exchanger and by the expected duration of the delay.

[74 FR 55686, Oct. 28, 2009, as amended at 75 FR 37731, June 30, 2010]

**§ 63.655 Reporting and recordkeeping requirements.**

(a) Each owner or operator subject to the wastewater provisions in § 63.647 shall comply with the recordkeeping and reporting provisions in §§ 61.356 and 61.357 of 40 CFR part 61, subpart FF unless they are complying with the wastewater provisions specified in paragraph (o)(2)(ii) of § 63.640. There are no additional reporting and recordkeeping requirements for wastewater under this subpart unless a wastewater stream is included in an emissions average. Recordkeeping and reporting for emissions averages are specified in § 63.653 and in paragraphs (f)(5) and (g)(8) of this section.

(b) Each owner or operator subject to the gasoline loading rack provisions in § 63.650 shall comply with the recordkeeping and reporting provisions in § 63.428 (b) and (c), (g)(1), (h)(1) through (h)(3), and (k) of subpart R. These requirements are summarized in table 4 of this subpart. There are no additional reporting and recordkeeping requirements for gasoline loading racks under this subpart unless a loading rack is included in an emissions average. Recordkeeping and reporting for emissions averages are specified in § 63.653 and in paragraphs (f)(5) and (g)(8) of this section.

(c) Each owner or operator subject to the marine tank vessel loading operation standards in § 63.651 shall comply with the recordkeeping and reporting provisions in §§ 63.567(a) and 63.567(c) through (k) of subpart Y. These requirements are summarized in table 5 of this subpart. There are no additional reporting and recordkeeping requirements for marine tank vessel loading operations under this subpart unless marine tank vessel loading operations are included in an emissions average. Recordkeeping and reporting for emissions averages are specified in § 63.653 and in paragraphs (f)(5) and (g)(8) of this section.

(d) Each owner or operator subject to the equipment leaks standards in § 63.648 shall comply with the recordkeeping and reporting provisions in paragraphs (d)(1) through (d)(6) of this section.

(1) Sections 60.486 and 60.487 of subpart VV of part 60 except as specified in paragraph (d)(1)(i) of this section; or §§ 63.181 and 63.182 of subpart H of this part except for §§ 63.182(b), (c)(2), and (c)(4).

(i) The signature of the owner or operator (or designate) whose decision it was that a repair could not be effected without a process shutdown is not required to be recorded. Instead, the name of the person whose decision it was that a repair could not be effected without a process shutdown shall be recorded and retained for 2 years.

(ii) [Reserved]

(2) The Notification of Compliance Status report required by § 63.182(c) of subpart H and the initial semiannual report required by § 60.487(b) of 40 CFR part 60, subpart VV shall be submitted within 150 days of the compliance date specified in § 63.640(h); the requirements of subpart H of this part are summarized in table 3 of this subpart.

(3) An owner or operator who determines that a compressor qualifies for the hydrogen service exemption in § 63.648 shall also keep a record of the demonstration required by § 63.648.

(4) An owner or operator must keep a list of identification numbers for valves that are designated as leakless per § 63.648(c)(10).

(5) An owner or operator must identify, either by list or location (area or refining process unit), equipment in organic HAP service less than 300 hours per year within refining process units subject to this subpart.

(6) An owner or operator must keep a list of reciprocating pumps and compressors determined to be exempt from seal requirements as per §§ 63.648 (f) and (i).

(e) Each owner or operator of a source subject to this subpart shall submit the reports listed in paragraphs (e)(1) through (e)(3) of this section except as provided in paragraph (h)(5) of this section, and shall keep records as described in paragraph (i) of this section.

(1) A Notification of Compliance Status report as described in paragraph (f) of this section;

(2) Periodic Reports as described in paragraph (g) of this section; and

(3) Other reports as described in paragraph (h) of this section.

(f) Each owner or operator of a source subject to this subpart shall submit a Notification of Compliance Status report within 150 days after the compliance dates specified in § 63.640(h) with the exception of Notification of Compliance Status reports submitted to comply with § 63.640(l)(3) and for storage vessels subject to the compliance schedule specified in § 63.640(h)(4). Notification of Compliance Status reports required by § 63.640(l)(3) and for storage vessels subject to the compliance dates specified in § 63.640(h)(4) shall be submitted according to paragraph (f)(6) of this section. This information may be submitted in an operating permit application, in an amendment to an operating permit application, in a separate submittal, or in any combination of the three. If the required information has been submitted before the date 150 days after the compliance date specified in § 63.640(h), a separate Notification of Compliance Status report is not required within 150 days after the compliance dates specified in § 63.640(h). If an owner or operator submits the information specified in paragraphs (f)(1) through (f)(5) of this section at different times, and/or in different submittals, later submittals may refer to earlier submittals instead of duplicating and resubmitting the previously submitted information. Each owner or operator of a gasoline loading rack classified under Standard Industrial Classification Code 2911 located within a contiguous area and under common control with a petroleum refinery subject to the standards of this subpart shall submit the Notification of Compliance Status report required by subpart R of this part within 150 days after the compliance dates specified in § 63.640(h) of this subpart.

(1) The Notification of Compliance Status report shall include the information specified in paragraphs (f)(1)(i) through (f)(1)(vi) of this section.

(i) For storage vessels, this report shall include the information specified in paragraphs (f)(1)(i)(A) through (f)(1)(i)(D) of this section.

(A) Identification of each storage vessel subject to this subpart, and for each Group 1 storage vessel subject to this subpart, the information specified in paragraphs (f)(1)(i)(A)( *1* ) through (f)(1)(i)(A)( *3* ) of this section. This information is to be revised each time a Notification of Compliance Status report is submitted for a storage vessel subject to the compliance schedule specified in § 63.640(h)(4) or to comply with § 63.640(l)(3).

( *1* ) For each Group 1 storage vessel complying with § 63.646 that is not included in an emissions average, the method of compliance (i.e., internal floating roof, external floating roof, or closed vent system and control device).

( *2* ) For storage vessels subject to the compliance schedule specified in § 63.640(h)(4) that are not complying with § 63.646, the anticipated compliance date.

( *3* ) For storage vessels subject to the compliance schedule specified in § 63.640(h)(4) that are complying with § 63.646 and the Group 1 storage vessels described in § 63.640(l), the actual compliance date.

(B) If a closed vent system and a control device other than a flare is used to comply with § 63.646 the owner or operator shall submit:

( *1* ) A description of the parameter or parameters to be monitored to ensure that the control device is being properly operated and maintained, an explanation of the criteria used for selection of that parameter (or parameters), and the frequency with which monitoring will be performed; and either

( *2* ) The design evaluation documentation specified in § 63.120(d)(1)(i) of subpart G, if the owner or operator elects to prepare a design evaluation; or

( *3* ) If the owner or operator elects to submit the results of a performance test, identification of the storage vessel and control device for which the performance test will be submitted, and identification of the emission point(s) that share the control device with the storage vessel and for which the performance test will be conducted.

(C) If a closed vent system and control device other than a flare is used, the owner or operator shall submit:

( *1* ) The operating range for each monitoring parameter. The specified operating range shall represent the conditions for which the control device is being properly operated and maintained.

( *2* ) If a performance test is conducted instead of a design evaluation, results of the performance test demonstrating that the control device achieves greater than or equal to the required control efficiency. A performance test conducted prior to the compliance date of this subpart can be used to comply with this requirement, provided that the test was conducted using EPA methods and that the test conditions are representative of current operating practices.

(D) If a closed vent system and a flare is used, the owner or operator shall submit:

( *1* ) Flare design (e.g., steam-assisted, air-assisted, or nonassisted);

( *2* ) All visible emission readings, heat content determinations, flow rate measurements, and exit velocity determinations made during the compliance determination required by § 63.120(e) of subpart G of this part; and

( *3* ) All periods during the compliance determination when the pilot flame is absent.

(ii) For miscellaneous process vents, identification of each miscellaneous process vent subject to this subpart, whether the process vent is Group 1 or Group 2, and the method of compliance for each Group 1 miscellaneous process vent that is not included in an emissions average (e.g., use of a flare or other control device meeting the requirements of § 63.643(a)).

(iii) For miscellaneous process vents controlled by control devices required to be tested under § 63.645 of this subpart and § 63.116(c) of subpart G of this part, performance test results including the information in paragraphs (f)(1)(iii)(A) and (B) of this section. Results of a performance test conducted prior to the compliance date of this subpart can be used provided that the test was conducted using the methods specified in § 63.645 and that the test conditions are representative of current operating conditions.

(A) The percentage of reduction of organic HAP's or TOC, or the outlet concentration of organic HAP's or TOC (parts per million by volume on a dry basis corrected to 3 percent oxygen), determined as specified in § 63.116(c) of subpart G of this part; and

(B) The value of the monitored parameters specified in table 10 of this subpart, or a site-specific parameter approved by the permitting authority, averaged over the full period of the performance test,

(iv) For miscellaneous process vents controlled by flares, performance test results including the information in paragraphs (f)(1)(iv)(A) and (B) of this section;

(A) All visible emission readings, heat content determinations, flow rate measurements, and exit velocity determinations made during the compliance determination required by § 63.645 of this subpart and § 63.116(a) of subpart G of this part, and

(B) A statement of whether a flame was present at the pilot light over the full period of the compliance determination.

(v) For equipment leaks complying with § 63.648(c) (i.e., complying with the requirements of subpart H of this part), the Notification of Compliance Report Status report information required by § 63.182(c) of subpart H and whether the percentage of leaking valves will be reported on a process unit basis or a sourcewide basis.

(vi) For each heat exchange system, identification of the heat exchange systems that are subject to the requirements of this subpart.

(2) If initial performance tests are required by §§ 63.643 through 63.653 of this subpart, the Notification of Compliance Status report shall include one complete test report for each test method used for a particular source.

(i) For additional tests performed using the same method, the results specified in paragraph (f)(1) of this section shall be submitted, but a complete test report is not required.

(ii) A complete test report shall include a sampling site description, description of sampling and analysis procedures and any modifications to standard procedures, quality assurance procedures, record of operating conditions during the test, record of preparation of standards, record of calibrations, raw data sheets for field sampling, raw data sheets for field and laboratory analyses, documentation of calculations, and any other information required by the test method.

(iii) Performance tests are required only if specified by §§ 63.643 through 63.653 of this subpart. Initial performance tests are required for some kinds of emission points and controls. Periodic testing of the same emission point is not required.

(3) For each monitored parameter for which a range is required to be established under § 63.120(d) of subpart G of this part for storage vessels or § 63.644 for miscellaneous process vents, the Notification of Compliance Status report shall include the information in paragraphs (f)(3)(i) through (f)(3)(iii) of this section.

(i) The specific range of the monitored parameter(s) for each emission point;

(ii) The rationale for the specific range for each parameter for each emission point, including any data and calculations used to develop the range and a description of why the range ensures compliance with the emission standard.

(A) If a performance test is required by this subpart for a control device, the range shall be based on the parameter values measured during the performance test supplemented by engineering assessments and manufacturer's recommendations. Performance testing is not required to be conducted over the entire range of permitted parameter values.

(B) If a performance test is not required by this subpart for a control device, the range may be based solely on engineering assessments and manufacturers' recommendations.

(iii) A definition of the source's operating day for purposes of determining daily average values of monitored parameters. The definition shall specify the times at which an operating day begins and ends.

(4) Results of any continuous monitoring system performance evaluations shall be included in the Notification of Compliance Status report.

(5) For emission points included in an emissions average, the Notification of Compliance Status report shall include the values of the parameters needed for input to the emission credit and debit equations in § 63.652(g) and (h), calculated or measured according to the procedures in § 63.652(g) and (h), and the resulting credits and debits for the first quarter of the year. The first quarter begins on the compliance date specified in § 63.640.

(6) Notification of Compliance Status reports required by § 63.640(l)(3) and for storage vessels subject to the compliance dates specified in § 63.640(h)(4) shall be submitted no later than 60 days after the end of the 6-month period during which the change or addition was made that resulted in the Group 1 emission point or the existing Group 1 storage vessel was brought into compliance, and may be combined with the periodic report. Six-month periods shall be the same 6-month periods specified in paragraph (g) of this section. The Notification of Compliance

Status report shall include the information specified in paragraphs (f)(1) through (f)(5) of this section. This information may be submitted in an operating permit application, in an amendment to an operating permit application, in a separate submittal, as part of the periodic report, or in any combination of these four. If the required information has been submitted before the date 60 days after the end of the 6-month period in which the addition of the Group 1 emission point took place, a separate Notification of Compliance Status report is not required within 60 days after the end of the 6-month period. If an owner or operator submits the information specified in paragraphs (f)(1) through (f)(5) of this section at different times, and/or in different submittals, later submittals may refer to earlier submittals instead of duplicating and resubmitting the previously submitted information.

(g) The owner or operator of a source subject to this subpart shall submit Periodic Reports no later than 60 days after the end of each 6-month period when any of the compliance exceptions specified in paragraphs (g)(1) through (6) of this section or paragraph (g)(9) of this section occur. The first 6-month period shall begin on the date the Notification of Compliance Status report is required to be submitted. A Periodic Report is not required if none of the compliance exceptions identified in paragraph (g)(1) through (6) of this section or paragraph (g)(9) of this section occurred during the 6-month period unless emissions averaging is utilized. Quarterly reports must be submitted for emission points included in emission averages, as provided in paragraph (g)(8) of this section. An owner or operator may submit reports required by other regulations in place of or as part of the Periodic Report required by this paragraph if the reports contain the information required by paragraphs (g)(1) through (9) of this section.

(1) For storage vessels, Periodic Reports shall include the information specified for Periodic Reports in paragraph (g)(2) through (g)(5) of this section except that information related to gaskets, slotted membranes, and sleeve seals is not required for storage vessels that are part of an existing source.

(2) An owner or operator who elects to comply with § 63.646 by using a fixed roof and an internal floating roof or by using an external floating roof converted to an internal floating roof shall submit the results of each inspection conducted in accordance with § 63.120(a) of subpart G of this part in which a failure is detected in the control equipment.

(i) For vessels for which annual inspections are required under § 63.120(a)(2)(i) or (a)(3)(ii) of subpart G of this part, the specifications and requirements listed in paragraphs (g)(2)(i)(A) through (g)(2)(i)(C) of this section apply.

(A) A failure is defined as any time in which the internal floating roof is not resting on the surface of the liquid inside the storage vessel and is not resting on the leg supports; or there is liquid on the floating roof; or the seal is detached from the internal floating roof; or there are holes, tears, or other openings in the seal or seal fabric; or there are visible gaps between the seal and the wall of the storage vessel.

(B) Except as provided in paragraph (g)(2)(i)(C) of this section, each Periodic Report shall include the date of the inspection, identification of each storage vessel in which a failure was detected, and a description of the failure. The Periodic Report shall also describe the nature of and date the repair was made or the date the storage vessel was emptied.

(C) If an extension is utilized in accordance with § 63.120(a)(4) of subpart G of this part, the owner or operator shall, in the next Periodic Report, identify the vessel; include the documentation specified in § 63.120(a)(4) of subpart G of this part; and describe the date the storage vessel was emptied and the nature of and date the repair was made.

(ii) For vessels for which inspections are required under § 63.120(a)(2)(ii), (a)(3)(i), or (a)(3)(iii) of subpart G of this part (i.e., internal inspections), the specifications and requirements listed in paragraphs (g)(2)(ii)(A) and (g)(2)(ii)(B) of this section apply.

(A) A failure is defined as any time in which the internal floating roof has defects; or the primary seal has holes, tears, or other openings in the seal or the seal fabric; or the secondary seal (if one has been installed) has holes, tears, or other openings in the seal or the seal fabric; or, for a storage vessel that is part of a new source, the gaskets no longer close off the liquid surface from the atmosphere; or, for a storage vessel that is part of a new source, the slotted membrane has more than a 10 percent open area.

(B) Each Periodic Report shall include the date of the inspection, identification of each storage vessel in which a failure was detected, and a description of the failure. The Periodic Report shall also describe the nature of and date the repair was made.

(3) An owner or operator who elects to comply with § 63.646 by using an external floating roof shall meet the periodic reporting requirements specified in paragraphs (g)(3)(i) through (g)(3)(iii) of this section.

(i) The owner or operator shall submit, as part of the Periodic Report, documentation of the results of each seal gap measurement made in accordance with § 63.120(b) of subpart G of this part in which the seal and seal gap requirements of § 63.120(b)(3), (b)(4), (b)(5), or (b)(6) of subpart G of this part are not met. This documentation shall include the information specified in paragraphs (g)(3)(i)(A) through (g)(3)(i)(D) of this section.

(A) The date of the seal gap measurement.

(B) The raw data obtained in the seal gap measurement and the calculations described in § 63.120(b)(3) and (b)(4) of subpart G of this part.

(C) A description of any seal condition specified in § 63.120(b)(5) or (b)(6) of subpart G of this part that is not met.

(D) A description of the nature of and date the repair was made, or the date the storage vessel was emptied.

(ii) If an extension is utilized in accordance with § 63.120(b)(7)(ii) or (b)(8) of subpart G of this part, the owner or operator shall, in the next Periodic Report, identify the vessel; include the documentation specified in § 63.120(b)(7)(ii) or (b)(8) of subpart G of this part, as applicable; and describe the date the vessel was emptied and the nature of and date the repair was made.

(iii) The owner or operator shall submit, as part of the Periodic Report, documentation of any failures that are identified during visual inspections required by § 63.120(b)(10) of subpart G of this part. This documentation shall meet the specifications and requirements in paragraphs (g)(3)(iii)(A) and (g)(3)(iii)(B) of this section.

(A) A failure is defined as any time in which the external floating roof has defects; or the primary seal has holes or other openings in the seal or the seal fabric; or the secondary seal has holes, tears, or other openings in the seal or the seal fabric; or, for a storage vessel that is part of a new source, the gaskets no longer close off the liquid surface from the atmosphere; or, for a storage vessel that is part of a new source, the slotted membrane has more than 10 percent open area.

(B) Each Periodic Report shall include the date of the inspection, identification of each storage vessel in which a failure was detected, and a description of the failure. The Periodic Report shall also describe the nature of and date the repair was made.

(4) An owner or operator who elects to comply with § 63.646 by using an external floating roof converted to an internal floating roof shall comply with the periodic reporting requirements of paragraph (g)(2) of this section.

(5) An owner or operator who elects to comply with § 63.646 by installing a closed vent system and control device shall submit, as part of the next Periodic Report, the information specified in paragraphs (g)(5)(i) through (g)(5)(iii) of this section.

(i) The Periodic Report shall include the information specified in paragraphs (g)(5)(i)(A) and (g)(5)(i)(B) of this section for those planned routine maintenance operations that would require the control device not to meet the requirements of § 63.119(e)(1) or (e)(2) of subpart G of this part, as applicable.

(A) A description of the planned routine maintenance that is anticipated to be performed for the control device during the next 6 months. This description shall include the type of maintenance necessary, planned frequency of maintenance, and lengths of maintenance periods.

(B) A description of the planned routine maintenance that was performed for the control device during the previous 6 months. This description shall include the type of maintenance performed and the total number of hours during those 6 months that the control device did not meet the requirements of § 63.119 (e)(1) or (e)(2) of subpart G of this part, as applicable, due to planned routine maintenance.

(ii) If a control device other than a flare is used, the Periodic Report shall describe each occurrence when the monitored parameters were outside of the parameter ranges documented in the Notification of Compliance Status report. The description shall include: Identification of the control device for which the measured parameters were outside of the established ranges, and causes for the measured parameters to be outside of the established ranges.

(iii) If a flare is used, the Periodic Report shall describe each occurrence when the flare does not meet the general control device requirements specified in § 63.11(b) of subpart A of this part and shall include: Identification of the flare that does not meet the general requirements specified in § 63.11(b) of subpart A of this part, and reasons the flare did not meet the general requirements specified in § 63.11(b) of subpart A of this part.

(6) For miscellaneous process vents for which continuous parameter monitors are required by this subpart, periods of excess emissions shall be identified in the Periodic Reports and shall be used to determine compliance with the emission standards.

(i) Period of excess emission means any of the following conditions:

(A) An operating day when the daily average value of a monitored parameter, except presence of a flare pilot flame, is outside the range specified in the Notification of Compliance Status report. Monitoring data recorded during periods of monitoring system breakdown, repairs, calibration checks and zero (low-level) and high-level adjustments shall not be used in computing daily average values of monitored parameters.

(B) An operating day when all pilot flames of a flare are absent.

(C) An operating day when monitoring data required to be recorded in paragraphs (i)(3) (i) and (ii) of this section are available for less than 75 percent of the operating hours.

(D) For data compression systems approved under paragraph (h)(5)(iii) of this section, an operating day when the monitor operated for less than 75 percent of the operating hours or a day when less than 18 monitoring values were recorded.

(ii) For miscellaneous process vents, excess emissions shall be reported for the operating parameters specified in table 10 of this subpart unless other site-specific parameter(s) have been approved by the operating permit authority.

(iii) Periods of startup and shutdown that meet the definition of § 63.641, and malfunction that meet the definition in § 63.2 and periods of performance testing and monitoring system calibration shall not be considered periods of excess emissions. Malfunctions may include process unit, control device, or monitoring system malfunctions.

(7) If a performance test for determination of compliance for a new emission point subject to this subpart or for an emission point that has changed from Group 2 to Group 1 is conducted during the period covered by a Periodic Report, the results of the performance test shall be included in the Periodic Report.

(i) Results of the performance test shall include the percentage of emissions reduction or outlet pollutant concentration reduction (whichever is needed to determine compliance) and the values of the monitored operating parameters.

(ii) The complete test report shall be maintained onsite.

(8) The owner or operator of a source shall submit quarterly reports for all emission points included in an emissions average.

(i) The quarterly reports shall be submitted no later than 60 calendar days after the end of each quarter. The first report shall be submitted with the Notification of Compliance Status report no later than 150 days after the compliance date specified in § 63.640.

(ii) The quarterly reports shall include:

(A) The information specified in this paragraph and in paragraphs (g)(2) through (g)(7) of this section for all storage vessels and miscellaneous process vents included in an emissions average;

(B) The information required to be reported by § 63.428 (h)(1), (h)(2), and (h)(3) for each gasoline loading rack included in an emissions average, unless this information has already been submitted in a separate report;

(C) The information required to be reported by § 63.567(e)(4) and (j)(3) of subpart Y for each marine tank vessel loading operation included in an emissions average, unless the information has already been submitted in a separate report;

(D) Any information pertaining to each wastewater stream included in an emissions average that the source is required to report under the Implementation Plan for the source;

(E) The credits and debits calculated each month during the quarter;

(F) A demonstration that debits calculated for the quarter are not more than 1.30 times the credits calculated for the quarter, as required under §§ 63.652(e)(4);

(G) The values of any inputs to the credit and debit equations in § 63.652 (g) and (h) that change from month to month during the quarter or that have changed since the previous quarter; and

(H) Any other information the source is required to report under the Implementation Plan for the source.

(iii) Every fourth quarterly report shall include the following:

(A) A demonstration that annual credits are greater than or equal to annual debits as required by § 63.652(e)(3); and

(B) A certification of compliance with all the emissions averaging provisions in § 63.652 of this subpart.

(9) For heat exchange systems, Periodic Reports must include the following information:

(i) The number of heat exchange systems in HAP service.

(ii) The number of heat exchange systems in HAP service found to be leaking.

(iii) A summary of the monitoring data that indicate a leak, including the number of leaks determined to be equal to or greater than the leak definitions specified in § 63.654(c)(2);

(iv) If applicable, the date a leak was identified, the date the source of the leak was identified, and the date of repair;

(v) If applicable, a summary of each delayed repair, including the original date and reason for the delay and the date of repair, if repaired during the reporting period; and

(vi) If applicable, an estimate of VOC emissions for each delayed repair over the reporting period.

(h) Other reports shall be submitted as specified in subpart A of this part and as follows:

(1) Reports of startup, shutdown, and malfunction required by § 63.10(d)(5). Records and reports of startup, shutdown, and malfunction are not required if they pertain solely to Group 2 emission points, as defined in § 63.641, that are not included in an emissions average. For purposes of this paragraph, startup and shutdown shall have the meaning defined in § 63.641, and malfunction shall have the meaning defined in § 63.2; and

(2) For storage vessels, notifications of inspections as specified in paragraphs (h)(2)(i) and (h)(2)(ii) of this section;

(i) In order to afford the Administrator the opportunity to have an observer present, the owner or operator shall notify the Administrator of the refilling of each Group 1 storage vessel that has been emptied and degassed.

(A) Except as provided in paragraphs (h)(2)(i) (B) and (C) of this section, the owner or operator shall notify the Administrator in writing at least 30 calendar days prior to filling or refilling of each storage vessel with organic HAP's to afford the Administrator the opportunity to inspect the storage vessel prior to refilling.

(B) Except as provided in paragraph (h)(2)(i)(C) of this section, if the internal inspection required by § 63.120(a)(2), § 63.120(a)(3), or § 63.120(b)(10) of subpart G of this part is not planned and the owner or operator could not have known about the inspection 30 calendar days in advance of refilling the vessel with organic HAP's, the owner or operator shall notify the Administrator at least 7 calendar days prior to refilling of the storage vessel. Notification may be made by telephone and immediately followed by written documentation demonstrating why the inspection was unplanned. This notification, including the written documentation, may also be made in writing and sent so that it is received by the Administrator at least 7 calendar days prior to the refilling.

(C) The State or local permitting authority can waive the notification requirements of paragraphs (h)(2)(i)(A) and/or (h)(2)(i)(B) of this section for all or some storage vessels at petroleum refineries subject to this subpart. The State or local permitting authority may also grant permission to refill storage vessels sooner than 30 days after submitting the notification required by paragraph (h)(2)(i)(A) of this section, or sooner than 7 days after submitting the notification required by paragraph (h)(2)(i)(B) of this section for all storage vessels, or for individual storage vessels on a case-by-case basis.

(ii) In order to afford the Administrator the opportunity to have an observer present, the owner or operator of a storage vessel equipped with an external floating roof shall notify the Administrator of any seal gap measurements. The notification shall be made in writing at least 30 calendar days in advance of any gap measurements required by § 63.120 (b)(1) or (b)(2) of subpart G of this part. The State or local permitting authority can waive this notification requirement for all or some storage vessels subject to the rule or can allow less than 30 calendar days' notice.

(3) For owners or operators of sources required to request approval for a nominal control efficiency for use in calculating credits for an emissions average, the information specified in § 63.652(h).

(4) The owner or operator who requests approval to monitor a different parameter than those listed in § 63.644 for miscellaneous process vents or who is required by § 63.653(a)(8) to establish a site-specific monitoring parameter for a point in an emissions average shall submit the information specified in paragraphs (h)(4)(i) through (h)(4)(iii) of this section. For new or reconstructed sources, the information shall be submitted with the application for approval of construction or reconstruction required by § 63.5(d) of subpart A and for existing sources, and the information shall be submitted no later than 18 months prior to the compliance date. The information may be submitted in an operating permit application, in an amendment to an operating permit application, or in a separate submittal.

(i) A description of the parameter(s) to be monitored to determine whether excess emissions occur and an explanation of the criteria used to select the parameter(s).

(ii) A description of the methods and procedures that will be used to demonstrate that the parameter can be used to determine excess emissions and the schedule for this demonstration. The owner or operator must certify that they will establish a range for the monitored parameter as part of the Notification of Compliance Status report required in paragraphs (e) and (f) of this section.

(iii) The frequency and content of monitoring, recording, and reporting if: monitoring and recording are not continuous; or if periods of excess emissions, as defined in paragraph (g)(6) of this section, will not be identified in Periodic Reports required under paragraphs (e) and (g) of this section. The rationale for the proposed monitoring, recording, and reporting system shall be included.

(5) An owner or operator may request approval to use alternatives to the continuous operating parameter monitoring and recordkeeping provisions listed in paragraph (i) of this section.

(i) Requests shall be submitted with the Application for Approval of Construction or Reconstruction for new sources and no later than 18 months prior to the compliance date for existing sources. The information may be submitted in an operating permit application, in an amendment to an operating permit application, or in a separate submittal.

Requests shall contain the information specified in paragraphs (h)(5)(iii) through (h)(5)(iv) of this section, as applicable.

(ii) The provisions in § 63.8(f)(5)(i) of subpart A of this part shall govern the review and approval of requests.

(iii) An owner or operator may request approval to use an automated data compression recording system that does not record monitored operating parameter values at a set frequency (for example, once every hour) but records all values that meet set criteria for variation from previously recorded values.

(A) The requested system shall be designed to:

( *1* ) Measure the operating parameter value at least once every hour.

( *2* ) Record at least 24 values each day during periods of operation.

( *3* ) Record the date and time when monitors are turned off or on.

( *4* ) Recognize unchanging data that may indicate the monitor is not functioning properly, alert the operator, and record the incident.

( *5* ) Compute daily average values of the monitored operating parameter based on recorded data.

(B) The request shall contain a description of the monitoring system and data compression recording system including the criteria used to determine which monitored values are recorded and retained, the method for calculating daily averages, and a demonstration that the system meets all criteria of paragraph (h)(5)(iii)(A) of this section.

(iv) An owner or operator may request approval to use other alternative monitoring systems according to the procedures specified in § 63.8(f) of subpart A of this part.

(6) The owner or operator shall submit the information specified in paragraphs (h)(6)(i) through (h)(6)(iii) of this section, as applicable. For existing sources, this information shall be submitted in the initial Notification of Compliance Status report. For a new source, the information shall be submitted with the application for approval of construction or reconstruction required by § 63.5(d) of subpart A of this part. The information may be submitted in an operating permit application, in an amendment to an operating permit application, or in a separate submittal.

(i) The determination of applicability of this subpart to petroleum refining process units that are designed and operated as flexible operation units.

(ii) The determination of applicability of this subpart to any storage vessel for which use varies from year to year.

(iii) The determination of applicability of this subpart to any distillation unit for which use varies from year to year.

(i) *Recordkeeping.* (1) Each owner or operator subject to the storage vessel provisions in § 63.646 shall keep the records specified in § 63.123 of subpart G of this part except as specified in paragraphs (i)(1)(i) through (i)(1)(iv) of this section.

(i) Records related to gaskets, slotted membranes, and sleeve seals are not required for storage vessels within existing sources.

(ii) All references to § 63.122 in § 63.123 of subpart G of this part shall be replaced with § 63.655(e),

(iii) All references to § 63.150 in § 63.123 of subpart G of this part shall be replaced with § 63.652.

(iv) If a storage vessel is determined to be Group 2 because the weight percent total organic HAP of the stored liquid is less than or equal to 4 percent for existing sources or 2 percent for new sources, a record of any data, assumptions, and procedures used to make this determination shall be retained.

(2) Each owner or operator required to report the results of performance tests under paragraphs (f) and (g)(7) of this section shall retain a record of all reported results as well as a complete test report, as described in paragraph (f)(2)(ii) of this section for each emission point tested.

(3) Each owner or operator required to continuously monitor operating parameters under § 63.644 for miscellaneous process vents or under §§ 63.652 and 63.653 for emission points in an emissions average shall keep the records specified in paragraphs (i)(3)(i) through (i)(3)(v) of this section unless an alternative recordkeeping system has been requested and approved under paragraph (h) of this section.

(i) The monitoring system shall measure data values at least once every hour.

(ii) The owner or operator shall record either:

(A) Each measured data value; or

(B) Block average values for 1 hour or shorter periods calculated from all measured data values during each period. If values are measured more frequently than once per minute, a single value for each minute may be used to calculate the hourly (or shorter period) block average instead of all measured values.

(iii) Daily average values of each continuously monitored parameter shall be calculated for each operating day and retained for 5 years except as specified in paragraph (i)(3)(iv) of this section.

(A) The daily average shall be calculated as the average of all values for a monitored parameter recorded during the operating day. The average shall cover a 24-hour period if operation is continuous, or the number of hours of operation per day if operation is not continuous.

(B) The operating day shall be the period defined in the Notification of Compliance Status report. It may be from midnight to midnight or another daily period.

(iv) If all recorded values for a monitored parameter during an operating day are within the range established in the Notification of Compliance Status report, the owner or operator may record that all values were within the range and retain this record for 5 years rather than calculating and recording a daily average for that day. For these days, the records required in paragraph (i)(3)(ii) of this section shall also be retained for 5 years.

(v) Monitoring data recorded during periods of monitoring system breakdowns, repairs, calibration checks, and zero (low-level) and high-level adjustments shall not be included in any average computed under this subpart. Records shall be kept of the times and durations of all such periods and any other periods during process or control device operation when monitors are not operating.

(4) The owner or operator of a heat exchange system subject to the monitoring requirements in § 63.654 shall comply with the recordkeeping requirements in paragraphs (i)(4)(i) through (vi) of this section.

(i) Identification of all heat exchangers at the facility and the average annual HAP concentration of process fluid or intervening cooling fluid estimated when developing the Notification of Compliance Status report.

(ii) Identification of all heat exchange systems that are in organic HAP service. For each heat exchange system that is subject to this subpart, this must include identification of all heat exchangers within each heat exchange system, identification of the individual heat exchangers in organic HAP service within each heat exchange system, and, for closed-loop recirculation systems, the cooling tower included in each heat exchange system.

(iii) Results of the following monitoring data for each monthly monitoring event:

(A) Date/time of event.

(B) Barometric pressure.

(C) El Paso air stripping apparatus water flow (ml/min) and air flow, ml/min, and air temperature, °C.

(D) FID reading (ppmv).

(E) Heat exchange exit line flow or cooling tower return line flow at the El Paso monitoring location, gal/min.

(F) Calibration information identified in Section 5.4.2 of the Modified El Paso Method, incorporated by reference in § 63.14(n).

(iv) The date when a leak was identified and the date when the heat exchanger was repaired or taken out of service.

(vi) If a repair is delayed, the reason for the delay, the schedule for completing the repair, and the estimate of potential emissions for the delay of repair.

(5) All other information required to be reported under paragraphs (a) through (h) of this section shall be retained for 5 years.

[60 FR 43260, Aug. 18, 1995, as amended at 61 FR 29881, June 12, 1996; 63 FR 44141, Aug. 18, 1998. Redesignated and amended at 74 FR 55686, 55687, Oct. 28, 2009; 75 FR 37731, June 30, 2010]

**§ 63.656 Implementation and enforcement.**

(a) This subpart can be implemented and enforced by the U.S. EPA, or a delegated authority such as the applicable State, local, or Tribal agency. If the U.S. EPA Administrator has delegated authority to a State, local, or Tribal agency, then that agency, in addition to the U.S. EPA, has the authority to implement and enforce this subpart. Contact the applicable U.S. EPA Regional Office to find out if implementation and enforcement of this subpart is delegated to a State, local, or Tribal agency.

(b) In delegating implementation and enforcement authority of this subpart to a State, local, or Tribal agency under subpart E of this part, the authorities contained in paragraph (c) of this section are retained by the Administrator of U.S. EPA and cannot be transferred to the State, local, or Tribal agency.

(c) The authorities that cannot be delegated to State, local, or Tribal agencies are as specified in paragraphs (c)(1) through (4) of this section.

(1) Approval of alternatives to the requirements in §§ 63.640, 63.642(g) through (l), 63.643, 63.646 through 63.652, and 63.654. Where these standards reference another subpart, the cited provisions will be delegated according to the delegation provisions of the referenced subpart. Where these standards reference another subpart and modify the requirements, the requirements shall be modified as described in this subpart. Delegation of the modified requirements will also occur according to the delegation provisions of the referenced subpart.

(2) Approval of major alternatives to test methods under § 63.7(e)(2)(ii) and (f), as defined in § 63.90, and as required in this subpart.

(3) Approval of major alternatives to monitoring under § 63.8(f), as defined in § 63.90, and as required in this subpart.

(4) Approval of major alternatives to recordkeeping and reporting under § 63.10(f), as defined in § 63.90, and as required in this subpart.

[68 FR 37351, June 23, 2003. Redesignated and amended at 74 FR 55686, 55688, Oct. 28, 2009]

**§§ 63.657-63.679 [Reserved]**

**Appendix to Subpart CC of Part 63—Tables**

Table 1—Hazardous Air Pollutants

| Chemical name | CAS No.[a] |
|---|---|
| Benzene | 71432 |
| Biphenyl | 92524 |
| Butadiene (1,3) | 106990 |
| Carbon disulfide | 75150 |
| Carbonyl sulfide | 463581 |
| Cresol (mixed isomers [b]) | 1319773 |
| Cresol (m-) | 108394 |
| Cresol (o-) | 95487 |
| Cresol (p-) | 106445 |
| Cumene | 98828 |
| Dibromoethane (1,2) (ethylene dibromide) | 106934 |
| Dichloroethane (1,2) | 107062 |
| Diethanolamine | 111422 |
| Ethylbenzene | 100414 |
| Ethylene glycol | 107211 |
| Hexane | 110543 |
| Methanol | 67561 |
| Methyl isobutyl ketone (hexone) | 108101 |
| Methyl tert butyl ether | 1634044 |
| Naphthalene | 91203 |
| Phenol | 108952 |
| Toluene | 108883 |
| Trimethylpentane (2,2,4) | 540841 |
| Xylene (mixed isomers [b]) | 1330207 |
| xylene (m-) | 108383 |
| xylene (o-) | 95476 |
| xylene (p-) | 106423 |

[a] CAS number = Chemical Abstract Service registry number assigned to specific compounds, isomers, or mixtures of compounds.

[b] Isomer means all structural arrangements for the same number of atoms of each element and does not mean salts, esters, or derivatives.

Table 2—Leak Definitions for Pumps and Valves

| Standard [a] | Phase | Leak definition (parts per million) |
|---|---|---|
| § 63.163 (pumps) | I | 10,000 |
| | II | 5,000 |
| | III | 2,000 |

| Standard [a] | Phase | Leak definition (parts per million) |
|---|---|---|
| § 63.168 (valves) | I | 10,000 |
| | II | 1,000 |
| | III | 1,000 |

[a] Subpart H of this part.

Table 3—Equipment Leak Recordkeeping and Reporting Requirements for Sources Complying With § 63.648 of Subpart CC by Compliance With Subpart H of this Part a

| Reference (section of subpart H of this part) | Description | Comment |
|---|---|---|
| 63.181(a) | Recordkeeping system requirements | Except for §§ 63.181(b)(2)(iii) and 63.181(b)(9). |
| 63.181(b) | Records required for process unit equipment | Except for §§ 63.181(b)(2)(iii) and 63.181(b)(9). |
| 63.181(c) | Visual inspection documentation | Except for §§ 63.181(b)(2)(iii) and 63.181(b)(9). |
| 63.181(d) | Leak detection record requirements | Except for § 63.181(d)(8). |
| 63.181(e) | Compliance requirements for pressure tests for batch product process equipment trains | This subsection does not apply to subpart CC. |
| 63.181(f) | Compressor compliance test records. | |
| 63.181(g) | Closed-vent systems and control device record requirements. | |
| 63.181(h) | Process unit quality improvement program records. | |
| 63.181(i) | Heavy liquid service determination record. | |
| 63.181(j) | Equipment identification record. | |
| 63.181(k) | Enclosed-vented process unit emission limitation record requirements. | |
| 63.182(a) | Reports. | |
| 63.182(b) | Initial notification report requirements. | Not required. |
| 63.182(c) | Notification of compliance status report | Except in § 63.182(c); change “within 90 days of the compliance dates” to “within 150 days of the compliance dates”; except in §§ 63.182 (c)(2) and (c)(4). |
| 63.182(d) | Periodic report | Except for §§ 63.182 (d)(2)(vii), (d)(2)(viii), and (d)(3). |

[a] This table does not include all the requirements delineated under the referenced sections. See referenced sections for specific requirements.

Table 4—Gasoline Distribution Emission Point Recordkeeping and Reporting Requirements a

| Reference (section of subpart R) | Description | Comment |
|---|---|---|
| 63.428(b) or (k) | Records of test results for each gasoline cargo tank loaded at the facility | |

| Reference (section of subpart R) | Description | Comment |
|---|---|---|
| 63.428(c) | Continuous monitoring data recordkeeping requirements | |
| 63.428(g)(1) | Semiannual report loading rack information | Required to be submitted with the Periodic Report required under 40 CFR part 63, subpart CC. |
| 63.428(h)(1) through (h)(3) | Excess emissions report loading rack information | Required to be submitted with the Periodic Report required under 40 CFR part 63, subpart CC. |

[a] This table does not include all the requirements delineated under the referenced sections. See referenced sections for specific requirements.

Table 5—Marine Vessel Loading Operations Recordkeeping and Reporting Requirements a

| Reference (section of subpart Y) | Description | Comment |
|---|---|---|
| 63.562(e)(2) | Operation and maintenance plan for control equipment and monitoring equipment | |
| 63.565(a) | Performance test/site test plan | The information required under this paragraph is to be submitted with the Notification of Compliance Status report required under 40 CFR part 63, subpart CC. |
| 63.565(b) | Performance test data requirements | |
| 63.567(a) | General Provisions (subpart A) applicability | |
| 63.567(c) | Request for extension of compliance | |
| 63.567(d) | Flare recordkeeping requirements | |
| 63.567(e) | Summary report and excess emissions and monitoring system performance report requirements | The information required under this paragraph is to be submitted with the Periodic Report required under 40 CFR part 63, subpart CC. |
| 63.567(f) | Vapor collection system engineering report | |
| 63.567(g) | Vent system valve bypass recordkeeping requirements | |
| 63.567(h) | Marine vessel vapor-tightness documentation | |
| 63.567(i) | Documentation file maintenance | |
| 63.567(j) | Emission estimation reporting and recordkeeping procedures | |

[a] This table does not include all the requirements delineated under the referenced sections. See referenced sections for specific requirements.

Table 6—General Provisions Applicability to Subpart CC a

| Reference | Applies to subpart CC | Comment |
|---|---|---|
| 63.1(a)(1) | Yes | |
| 63.1(a)(2) | Yes | |

| Reference | Applies to subpart CC | Comment |
|---|---|---|
| 63.1(a)(3) | Yes | |
| 63.1(a)(4) | Yes | |
| 63.1(a)(5) | No | Reserved. |
| 63.1(a)(6) | Yes | Except the correct mail drop (MD) number is C404-04. |
| 63.1(a)(7)-63.1(a)(9) | No | Reserved. |
| 63.1(a)(10) | Yes | |
| 63.1(a)(11) | Yes | |
| 63.1(a)(12) | Yes | |
| 63.1(b)(1) | Yes | |
| 63.1(b)(2) | No | Reserved. |
| 63.1(b)(3) | No | |
| 63.1(c)(1) | Yes | |
| 63.1(c)(2) | No | Area sources are not subject to subpart CC. |
| 63.1(c)(3)-63.1(c)(4) | No | Reserved. |
| 63.1(c)(5) | Yes | Except that sources are not required to submit notifications overridden by this table. |
| 63.1(d) | No | Reserved. |
| 63.1(e) | No | No CAA section 112(j) standard applies to the affected sources under subpart CC. |
| 63.2 | Yes | § 63.641 of subpart CC specifies that if the same term is defined in subparts A and CC, it shall have the meaning given in subpart CC. |
| 63.3 | Yes | |
| 63.4(a)(1)-63.4(a)(2) | Yes | |
| 63.4(a)(3)-63.4(a)(5) | No | Reserved. |
| 63.4(b) | Yes | |
| 63.4(c) | Yes | |
| 63.5(a) | Yes | |
| 63.5(b)(1) | Yes | |
| 63.5(b)(2) | No | Reserved. |
| 63.5(b)(3) | Yes | |
| 63.5(b)(4) | Yes | Except the cross-reference to § 63.9(b) is changed to § 63.9(b)(4) and (5). Subpart CC overrides § 63.9 (b)(2). |
| 63.5(b)(5) | No | Reserved. |
| 63.5(b)(6) | Yes | |
| 63.5(c) | No | Reserved. |
| 63.5(d)(1)(i) | Yes | Except that the application shall be submitted as soon as practicable before startup, but no later than 90 days after the promulgation date of subpart CC if the construction or reconstruction had commenced and initial startup had not occurred before the promulgation of subpart CC. |
| 63.5(d)(1)(ii) | Yes | Except that for affected sources subject to subpart CC, emission estimates specified in § 63.5(d)(1)(ii)(H) are not required. |
| 63.5(d)(1)(iii) | No | Subpart CC § 63.655(f) specifies Notification of Compliance Status report requirements. |
| 63.5(d)(2) | Yes | |

| Reference | Applies to subpart CC | Comment |
|---|---|---|
| 63.5(d)(3) | Yes | |
| 63.5(d)(4) | Yes | |
| 63.5(e) | Yes | |
| 63.5(f) | Yes | |
| 63.6(a) | Yes | |
| 63.6(b)(1)-63.6(b)(5) | No | Subpart CC specifies compliance dates and notifications for sources subject to subpart CC. |
| 63.6(b)(6) | No | Reserved. |
| 63.6(b)(7) | Yes | |
| 63.6(c)(1)-63.6(c)(2) | No | § 63.640 of subpart CC specifies the compliance date. |
| 63.6(c)(3)-63.6(c)(4) | No | Reserved. |
| 63.6(c)(5) | Yes | |
| 63.6(d) | No | Reserved. |
| 63.6(e)(1) | Yes | Except the startup, shutdown, or malfunction plan does not apply to Group 2 emission points that are not part of an emissions averaging group.[b] |
| 63.6(e)(2) | No | Reserved. |
| 63.6(e)(3)(i) | Yes | Except the startup, shutdown, or malfunction plan does not apply to Group 2 emission points that are not part of an emissions averaging group.[b] |
| 63.6(e)(3)(ii) | No | Reserved. |
| 63.6(e)(3)(iii)-63.6(e)(3)(ix) | Yes | Except the reports specified in § 63.6(e)(3)(iv) do not need to be reported within 2 and 7 days of commencing and completing the action, respectively, but must be included in the next periodic report. |
| 63.6 (f)(1) | Yes | Except for the heat exchange system standards, which apply at all times. |
| 63.6(f)(2) and (3) | Yes | Except the phrase “as specified in § 63.7(c)” in § 63.6(f)(2)(iii)(D) does not apply because subpart CC does not require a site-specific test plan. |
| 63.6(g) | Yes | |
| 63.6(h)(1) and 63.6(h)(2) | Yes | Except § 63.6(h)(2)(ii), which is reserved. |
| 63.6(h)(3) | No | Reserved. |
| 63.6(h)(4) | No | Notification of visible emission test not required in subpart CC. |
| 63.6(h)(5) | No | Visible emission requirements and timing is specified in § 63.645(i) of subpart CC. |
| 63.6(h)(6) | Yes | |
| 63.6(h)(7) | No | Subpart CC does not require opacity standards. |
| 63.6(h)(8) | Yes | |
| 63.6(h)(9) | No | Subpart CC does not require opacity standards. |
| 63.6(i) | Yes | Except for § 63.6(i)(15), which is reserved. |
| 63.6(j) | Yes | |
| 63.7(a)(1) | Yes | |
| 63.7(a)(2) | Yes | Except test results must be submitted in the Notification of Compliance Status report due 150 days after compliance date, as specified in § 63.655(f) of subpart CC. |
| 63.7(a)(3) | Yes | |
| 63.7(a)(4) | Yes | |
| 63.7(b) | No | Subpart CC requires notification of performance test at least 30 days (rather than 60 days) prior to the performance test. |

| Reference | Applies to subpart CC | Comment |
|---|---|---|
| 63.7(c) | No | Subpart CC does not require a site-specific test plan. |
| 63.7(d) | Yes | |
| 63.7(e)(1) | Yes | Except the performance test must be conducted at the maximum representative capacity as specified in § 63.642(d)(3) of subpart CC. |
| 63.7(e)(2)-63.7(e)(4) | Yes | |
| 63.7(f) | No | Subpart CC specifies applicable methods and provides alternatives without additional notification or approval. |
| 63.7(g) | No | Performance test reporting specified in § 63.655(f). |
| 63.7(h)(1) | Yes | |
| 63.7(h)(2) | Yes | |
| 63.7(h)(3) | Yes | Yes, except site-specific test plans shall not be required, and where § 63.7(g)(3) specifies submittal by the date the site-specific test plan is due, the date shall be 90 days prior to the Notification of Compliance Status report in § 63.655(f). |
| 63.7(h)(4)(i) | Yes | |
| 63.7(h)(4)(ii) | No | Site-specific test plans are not required in subpart CC. |
| 63.7(h)(4)(iii) and (iv) | Yes | |
| 63.7(h)(5) | Yes | |
| 63.8(a) | Yes | Except § 63.8(a)(3), which is reserved. |
| 63.8(b) | Yes | |
| 63.8(c)(1) | Yes | |
| 63.8(c)(2) | Yes | |
| 63.8(c)(3) | Yes | Except that verification of operational status shall, at a minimum, include completion of the manufacturer's written specifications or recommendations for installation, operation, and calibration of the system or other written procedures that provide adequate assurance that the equipment would monitor accurately. |
| 63.8(c)(4) | Yes | Except subpart CC specifies the monitoring cycle frequency specified in § 63.8(c)(4)(ii) is “once every hour” rather than “for each successive 15-minute period.” |
| 63.8(c)(5)-63.8(c)(8) | No | |
| 63.8(d) | No | |
| 63.8(e) | No | Subpart CC does not require performance evaluations; however, this shall not abrogate the Administrator's authority to require performance evaluation under section 114 of the Clean Air Act. |
| 63.8(f)(1) | Yes | |
| 63.8(f)(2) | Yes | |
| 63.8(f)(3) | Yes | |
| 63.8(f)(4)(i) | No | Timeframe for submitting request is specified in § 63.655(h)(5)(i) of subpart CC. |
| 63.8(f)(4)(ii) | Yes | |
| 63.8(f)(4)(iii) | No | Timeframe for submitting request is specified in § 63.655(h)(5)(i) of subpart CC. |
| 63.8(f)(5) | Yes | |
| 63.8(f)(6) | No | Subpart CC does not require continuous emission monitors. |
| 63.8(g) | No | Subpart CC specifies data reduction procedures in § 63.655(i)(3). |
| 63.9(a) | Yes | Except that the owner or operator does not need to send a copy of each notification submitted to the Regional Office of the EPA as stated in § 63.9(a)(4)(ii). |

| Reference | Applies to subpart CC | Comment |
|---|---|---|
| 63.9(b)(1) | Yes | Except the notification of compliance status report specified in § 63.655(f) of subpart CC may also serve as the initial compliance notification required in § 63.9(b)(1)(iii). |
| 63.9(b)(2) | No | A separate Initial Notification report is not required under subpart CC. |
| 63.9(b)(3) | No | Reserved. |
| 63.9(b)(4) | Yes | Except for subparagraphs § 63.9(b)(4)(ii) through (iv), which are reserved. |
| 63.9(b)(5) | Yes | |
| 63.9(c) | Yes | |
| 63.9(d) | Yes | |
| 63.9(e) | No | Subpart CC requires notification of performance test at least 30 days (rather than 60 days) prior to the performance test and does not require a site-specific test plan. |
| 63.9(f) | No | Subpart CC does not require advanced notification of visible emissions test. |
| 63.9(g) | No | |
| 63.9(h) | No | Subpart CC § 63.655(f) specifies Notification of Compliance Status report requirements. |
| 63.9(i) | Yes | |
| 63.9(j) | No | |
| 63.10(a) | Yes | |
| 63.10(b)(1) | No | § 63.655(i) of subpart CC specifies record retention requirements. |
| 63.10(b)(2)(i) | Yes | |
| 63.10(b)(2)(ii) | Yes | |
| 63.10(b)(2)(iii) | No | |
| 63.10(b)(2)(iv) | Yes | |
| 63.10(b)(2)(v) | Yes | |
| 63.10(b)(2)(vi) | Yes | |
| 63.10(b)(2)(vii) | No | |
| 63.10(b)(2)(viii) | Yes | |
| 63.10(b)(2)(ix) | Yes | |
| 63.10(b)(2)(x) | Yes | |
| 63.10(b)(2)(xi) | No | |
| 63.10(b)(2)(xii) | Yes | |
| 63.10(b)(2)(xiii) | No | |
| 63.10(b)(2)(xiv) | Yes | |
| 63.10(b)(3) | No | |
| 63.10(c)(1)-63.10(c)(6) | No | |
| 63.10(c)(7) and 63.10(c)(8) | Yes | |
| 63.10(c)(9)-63.10(c)(15) | No | |
| 63.10(d)(1) | Yes | |
| 63.10(d)(2) | No | § 63.655(f) of subpart CC specifies performance test reporting. |
| 63.10(d)(3) | No | Results of visible emissions test are included in Compliance Status Report as specified in § 63.655(f). |
| 63.10(d)(4) | Yes | |

| Reference | Applies to subpart CC | Comment |
|---|---|---|
| 63.10(d)(5)(i) | Yes[b] | Except that reports required by § 63.10(d)(5)(i) may be submitted at the same time as periodic reports specified in § 63.655(g) of subpart CC. |
| 63.10(d)(5)(ii) | Yes | Except that actions taken during a startup, shutdown, or malfunction that are not consistent with the startup, shutdown, and malfunction plan and that cause the source to exceed any applicable emission limitation do not need to be reported within 2 and 7 days of commencing and completing the action, respectively, but must be included in the next periodic report. |
| 63.10(e) | No | |
| 63.10(f) | Yes | |
| 63.11-63.16 | Yes | |

[a] Wherever subpart A specifies “postmark” dates, submittals may be sent by methods other than the U.S. Mail (e.g., by fax or courier). Submittals shall be sent by the specified dates, but a postmark is not required.

[b] The plan, and any records or reports of startup, shutdown, and malfunction do not apply to Group 2 emission points that are not part of an emissions averaging group.

Table 7—Fraction Measured (FM), Fraction Emitted (FE), and Fraction Removed (FR) for HAP Compounds in Wastewater Streams

| Chemical name | CAS No.[a] | $F_m$ | $F_e$ | Fr |
|---|---|---|---|---|
| Benzene | 71432 | 1.00 | 0.80 | 0.99 |
| Biphenyl | 92524 | 0.86 | 0.45 | 0.99 |
| Butadiene (1,3) | 106990 | 1.00 | 0.98 | 0.99 |
| Carbon disulfide | 75150 | 1.00 | 0.92 | 0.99 |
| Cumene | 98828 | 1.00 | 0.88 | 0.99 |
| Dichloroethane (1,2-) (Ethylene dichloride) | 107062 | 1.00 | 0.64 | 0.99 |
| Ethylbenzene | 100414 | 1.00 | 0.83 | 0.99 |
| Hexane | 110543 | 1.00 | 1.00 | 0.99 |
| Methanol | 67561 | 0.85 | 0.17 | 0.31 |
| Methyl isobutyl ketone (hexone) | 108101 | 0.98 | 0.53 | 0.99 |
| Methyl tert butyl ether | 1634044 | 1.00 | 0.57 | 0.99 |
| Naphthalene | 91203 | 0.99 | 0.51 | 0.99 |
| Trimethylpentane (2,2,4) | 540841 | 1.00 | 1.00 | 0.99 |
| xylene (m-) | 108383 | 1.00 | 0.82 | 0.99 |
| xylene (o-) | 95476 | 1.00 | 0.79 | 0.99 |
| xylene (p-) | 106423 | 1.00 | 0.82 | 0.99 |

[a] CAS numbers refer to the Chemical Abstracts Service registry number assigned to specific compounds, isomers, or mixtures of compounds.

Table 8—Valve Monitoring Frequency for Phase III

| Performance level | Valve monitoring frequency |
|---|---|
| Leaking valves [a](%) | |
| ≥4 | Monthly or QIP. [b] |

| Performance level<br>Leaking valves [a](%) | Valve monitoring frequency |
|---|---|
| <4 | Quarterly. |
| <3 | Semiannual. |
| <2 | Annual. |

[a] Percent leaking valves is calculated as a rolling average of two consecutive monitoring periods.

[b] QIP=Quality improvement program. Specified in § 63.175 of subpart H of this part.

Table 9—Valve Monitoring Frequency for Alternative

| Performance level<br>Leaking valves [a](%) | Valve monitoring frequency under § 63.649 alternative |
|---|---|
| ≥5 | Monthly or QIP. [b] |
| <5 | Quarterly. |
| <4 | Semiannual. |
| <3 | Annual. |

[a] Percent leaking valves is calculated as a rolling average of two consecutive monitoring periods.

[b] QIP=Quality improvement program. Specified in § 63.175 of subpart H of this part.

Table 10—Miscellaneous Process Vents—Monitoring, Recordkeeping and Reporting Requirements for Complying With 98 Weight-Percent Reduction of Total Organic HAP Emissions or a Limit of 20 Parts Per Million by Volume

| Control device | Parameters to be monitored [a] | Recordkeeping and reporting requirements for monitored parameters |
|---|---|---|
| Thermal incinerator | Firebox temperature [b](63.644(a)(1)(i)) | 1. Continuous records [c]. |
| | | 2. Record and report the firebox temperature averaged over the full period of the performance test—NCS [d]. |
| | | 3. Record the daily average firebox temperature for each operating day [e]. |
| | | 4. Report all daily average temperatures that are outside the range established in the NCS or operating permit and all operating days when insufficient monitoring data are collected [f]—PR [g]. |
| Catalytic incinerator | Temperature upstream and downstream of the catalyst bed (63.644(a)(1)(ii)) | 1. Continuous records [c]. |
| | | 2. Record and report the upstream and downstream temperatures and the temperature difference across the catalyst bed averaged over the full period of the performance test—NCS [d]. |
| | | 3. Record the daily average upstream temperature and temperature difference across the catalyst bed for each operating day [e]. |

| Control device | Parameters to be monitored [a] | Recordkeeping and reporting requirements for monitored parameters |
|---|---|---|
| | | 4. Report all daily average upstream temperatures that are outside the range established in the NCS or operating permit—PR [g]. |
| | | 5. Report all daily average temperature differences across the catalyst bed that are outside the range established in the NCS or operating permit—PR [g]. |
| | | 6. Report all operating days when insufficient monitoring data are collected [f]. |
| Boiler or process heater with a design heat capacity less than 44 megawatts where the vent stream is*not*introduced into the flame zone [h,i] | Firebox temperature [b](63.644(a)(4)) | 1. Continuous records [c]. |
| | | 2. Record and report the firebox temperature averaged over the full period of the performance test—NCS [d]. |
| | | 3. Record the daily average firebox temperature for each operating day [e]. |
| | | 4. Report all daily average firebox temperatures that are outside the range established in the NCS or operating permit and all operating days when insufficient monitoring data are collected [f]—PR [g]. |
| Flare | Presence of a flame at the pilot light (63.644(a)(2)) | 1. Hourly records of whether the monitor was continuously operating and whether a pilot flame was continuously present during each hour. |
| | | 2. Record and report the presence of a flame at the pilot light over the full period of the compliance determination—NCS [d]. |
| | | 3. Record the times and durations of all periods when all pilot flames for a flare are absent or the monitor is not operating. |
| | | 4. Report the times and durations of all periods when all pilot flames for a flare are absent or the monitor is not operating. |
| All control devices | Presence of flow diverted to the atmosphere from the control device (63.644(c)(1))*or* | 1. Hourly records of whether the flow indicator was operating and whether flow was detected at any time during each hour. |
| | | 2. Record and report the times and durations of all periods when the vent stream is diverted through a bypass line or the monitor is not operating—PR [g]. |
| | Monthly inspections of sealed valves [63.644(c)(2)] | 1. Records that monthly inspections were performed. |
| | | 2. Record and report all monthly inspections that show the valves are not closed or the seal has been changed—PR [g]. |

[a] Regulatory citations are listed in parentheses.

[b] Monitor may be installed in the firebox or in the ductwork immediately downstream of the firebox before any substantial heat exchange is encountered.

[c] "Continuous records" is defined in § 63.641.

[d] NCS = Notification of Compliance Status Report described in § 63.655.

[e] The daily average is the average of all recorded parameter values for the operating day. If all recorded values during an operating day are within the range established in the NCS or operating permit, a statement to this effect can be recorded instead of the daily average.

[f] When a period of excess emission is caused by insufficient monitoring data, as described in § 63.655(g)(6)(i)(C) or (D), the duration of the period when monitoring data were not collected shall be included in the Periodic Report.

[g] PR = Periodic Reports described in § 63.655(g).

[h] No monitoring is required for boilers and process heaters with a design heat capacity ≥44 megawatts or for boilers and process heaters where all vent streams are introduced into the flame zone. No recordkeeping or reporting associated with monitoring is required for such boilers and process heaters.

[i] Process vents that are routed to refinery fuel gas systems are not regulated under this subpart. No monitoring, recordkeeping, or reporting is required for boilers and process heaters that combust refinery fuel gas.

[60 FR 43260, Aug. 18, 1995, as amended at 61 FR 29881, 29882, June 12, 1996; 63 FR 44142, 44143, Aug. 18, 1998; 74 FR 55688, Oct. 28, 2009; 75 FR 37731, June 30, 2010]

**Attachment E**
**To Part 70 Operating Permit Renewal No. T129-25424-00003**

[Downloaded from the eCFR on May 20, 2013]

**Electronic Code of Federal Regulations**

**Title 40: Protection of Environment**

**40 CFR 60, Subpart GGG—Standards of Performance for Equipment Leaks of VOC in Petroleum Refineries for which Construction, Reconstruction, or Modification Commenced After January 4, 1983, and on or Before November 7, 2006**

Source: 49 FR 22606, May 30, 1984, unless otherwise noted.

**§ 60.590 Applicability and designation of affected facility.**

(a)(1) The provisions of this subpart apply to affected facilities in petroleum refineries.

(2) A compressor is an affected facility.

(3) The group of all the equipment (defined in § 60.591) within a process unit is an affected facility.

(b) Any affected facility under paragraph (a) of this section that commences construction, reconstruction, or modification after January 4, 1983, and on or before November 7, 2006, is subject to the requirements of this subpart.

(c) Addition or replacement of equipment (defined in § 60.591) for the purpose of process improvement which is accomplished without a capital expenditure shall not by itself be considered a modification under this subpart.

(d) Facilities subject to subpart VV, subpart VVa, or subpart KKK of this part are excluded from this subpart.

(e) *Stay of standards* . Owners or operators are not required to comply with the definition of “process unit” in § 60.590 of this subpart until the EPA takes final action to require compliance and publishes a document in the FEDERAL REGISTER. While the definition of “process unit” is stayed, owners or operators should use the following definition:

*Process unit* means components assembled to produce intermediate or final products from petroleum, unfinished petroleum derivatives, or other intermediates; a process unit can operate independently if supplied with sufficient feed or raw materials and sufficient storage facilities for the product.

[49 FR 22606, May 30, 1984, as amended at 72 FR 64895, Nov. 16, 2007; 73 FR 31376, June 2, 2008]

**§ 60.591 Definitions.**

As used in this subpart, all terms not defined herein shall have the meaning given them in the act, in subpart A of part 60, or in subpart VV of part 60, and the following terms shall have the specific meanings given them.

*Alaskan North Slope* means the approximately 69,000 square mile area extending from the Brooks Range to the Arctic Ocean.

*Asphalt* (also known as Bitumen) is a black or dark brown solid or semi-solid thermo-plastic material possessing waterproofing and adhesive properties. It is a complex combination of higher molecular weight organic compounds containing a relatively high proportion of hydrocarbons having carbon numbers greater than C25 with a high carbon to hydrogen ratio. It is essentially non-volatile at ambient temperatures with closed cup flash point of 445 °F (230 °C) or greater.

*Equipment* means each valve, pump, pressure relief device, sampling connection system, open-ended valve or line, and flange or other connector in VOC service. For the purposes of recordkeeping and reporting only, compressors are considered equipment.

*In hydrogen service* means that a compressor contains a process fluid that meets the conditions specified in § 60.593(b).

*In light liquid service* means that the piece of equipment contains a liquid that meets the conditions specified in § 60.593(c).

*Petroleum* means the crude oil removed from the earth and the oils derived from tar sands, shale, and coal.

*Petroleum refinery* means any facility engaged in producing gasoline, kerosene, distillate fuel oils, residual fuel oils, lubricants, or other products through the distillation of petroleum, or through the redistillation, cracking, or reforming of unfinished petroleum derivatives.

*Process unit* means the components assembled and connected by pipes or ducts to process raw materials and to produce intermediate or final products from petroleum, unfinished petroleum derivatives, or other intermediates. A process unit can operate independently if supplied with sufficient feed or raw materials and sufficient storage facilities for the product. For the purpose of this subpart, process unit includes any feed, intermediate and final product storage vessels (except as specified in § 60.482-1(g)), product transfer racks, and connected ducts and piping. A process unit includes all equipment as defined in this subpart.

[49 FR 22606, May 30, 1984, as amended at 72 FR 64895, Nov. 16, 2007]

EFFECTIVE DATE NOTE: At 73 FR 31376, June 2, 2008, § 60.591, the definition of “process unit” was stayed until further notice.

**§ 60.592 Standards.**

(a) Each owner or operator subject to the provisions of this subpart shall comply with the requirements of §§ 60.482-1 to 60.482-10 as soon as practicable, but no later than 180 days after initial startup.

(b) For a given process unit, an owner or operator may elect to comply with the requirements of paragraphs (b)(1), (2), or (3) of this section as an alternative to the requirements in § 60.482-7.

(1) Comply with § 60.483-1.

(2) Comply with § 60.483-2.

(3) Comply with the Phase III provisions in 40 CFR 63.168, except an owner or operator may elect to follow the provisions in § 60.482-7(f) instead of 40 CFR 63.168 for any valve that is designated as being leakless.

(c) An owner or operator may apply to the Administrator for a determination of equivalency for any means of emission limitation that achieves a reduction in emissions of VOC at least equivalent to the reduction in emissions of VOC achieved by the controls required in this subpart. In doing so, the owner or operator shall comply with requirements of § 60.484.

(d) Each owner or operator subject to the provisions of this subpart shall comply with the provisions of § 60.485 except as provided in § 60.593.

(e) Each owner or operator subject to the provisions of this subpart shall comply with the provisions of §§ 60.486 and 60.487.

[49 FR 22606, May 30, 1984, as amended at 72 FR 64896, Nov. 16, 2007]

**§ 60.593 Exceptions.**

(a) Each owner or operator subject to the provisions of this subpart may comply with the following exceptions to the provisions of subpart VV.

(b)(1) Compressors in hydrogen service are exempt from the requirements of § 60.592 if an owner or operator demonstrates that a compressor is in hydrogen service.

(2) Each compressor is presumed not to be in hydrogen service unless an owner or operator demonstrates that the piece of equipment is in hydrogen service. For a piece of equipment to be considered in hydrogen service, it must be determined that the percent hydrogen content can be reasonably expected always to exceed 50 percent by volume. For purposes of determining the percent hydrogen content in the process fluid that is contained in or contacts a compressor, procedures that conform to the general method described in ASTM E260-73, 91, or 96, E168-67, 77, or 92, or E169-63, 77, or 93 (incorporated by reference as specified in § 60.17) shall be used.

(3)(i) An owner or operator may use engineering judgment rather than procedures in paragraph (b)(2) of this section to demonstrate that the percent content exceeds 50 percent by volume, provided the engineering judgment demonstrates that the content clearly exceeds 50 percent by volume. When an owner or operator and the Administrator do not agree on whether a piece of equipment is in hydrogen service, however, the procedures in paragraph (b)(2) shall be used to resolve the disagreement.

(ii) If an owner or operator determines that a piece of equipment is in hydrogen service, the determination can be revised only after following the procedures in paragraph (b)(2).

(c) Any existing reciprocating compressor that becomes an affected facility under provisions of § 60.14 or § 60.15 is exempt from § 60.482-3(a), (b), (c), (d), (e), and (h) provided the owner or operator demonstrates that recasting the distance piece or replacing the compressor are the only options available to bring the compressor into compliance with the provisions of § 60.482-3(a), (b), (c), (d), (e), and (h).

(d) An owner or operator may use the following provision in addition to § 60.485(e): Equipment is in light liquid service if the percent evaporated is greater than 10 percent at 150 °C as determined by ASTM Method D86-78, 82, 90, 95, or 96 (incorporated by reference as specified in § 60.17).

(e) Pumps in light liquid service and valves in gas/vapor and light liquid service within a process unit that is located in the Alaskan North Slope are exempt from the requirements of § 60.482-2 and § 60.482-7.

(f) Open-ended valves or lines containing asphalt as defined in § 60.591 are exempt from the requirements of § 60.482-6(a) through (c).

[49 FR 22606, May 30, 1984, as amended at 65 FR 61768, Oct. 17, 2000; 72 FR 64896, Nov. 16, 2007]

# Attachment F
# To Part 70 Operating Permit Renewal No. T129-25424-00003

[Downloaded from the eCFR on May 21, 2013]

**Electronic Code of Federal Regulations**

**Title 40: Protection of Environment**

**40 CFR 60, Subpart QQQ—Standards of Performance for VOC Emissions From Petroleum Refinery Wastewater Systems**

Source: 53 FR 47623, Nov. 23, 1988, unless otherwise noted.

**§ 60.690 Applicability and designation of affected facility.**

(a)(1) The provisions of this subpart apply to affected facilities located in petroleum refineries for which construction, modification, or reconstruction is commenced after May 4, 1987.

(2) An individual drain system is a separate affected facility.

(3) An oil-water separator is a separate affected facility.

(4) An aggregate facility is a separate affected facility.

(b) Notwithstanding the provisions of 40 CFR 60.14(e)(2), the construction or installation of a new individual drain system shall constitute a modification to an affected facility described in § 60.690(a)(4). For purposes of this paragraph, a new individual drain system shall be limited to all process drains and the first common junction box.

**§ 60.691 Definitions.**

As used in this subpart, all terms not defined herein shall have the meaning given them in the Act or in subpart A of 40 CFR part 60, and the following terms shall have the specific meanings given them.

*Active service* means that a drain is receiving refinery wastewater from a process unit that will continuously maintain a water seal.

*Aggregate facility* means an individual drain system together with ancillary downstream sewer lines and oil-water separators, down to and including the secondary oil-water separator, as applicable.

*Catch basin* means an open basin which serves as a single collection point for stormwater runoff received directly from refinery surfaces and for refinery wastewater from process drains.

*Closed vent system* means a system that is not open to the atmosphere and that is composed of piping, connections, and, if necessary, flow-inducing devices that transport gas or vapor from an emission source to a control device. If gas or vapor from regulated equipment are routed to a process (e.g., to a petroleum refinery fuel gas system), the process shall not be considered a closed vent system and is not subject to the closed vent system standards.

*Completely closed drain system* means an individual drain system that is not open to the atmosphere and is equipped and operated with a closed vent system and control device complying with the requirements of § 60.692-5.

*Control device* means an enclosed combustion device, vapor recovery system or flare.

*Fixed roof* means a cover that is mounted to a tank or chamber in a stationary manner and which does not move with fluctuations in wastewater levels.

*Floating roof* means a pontoon-type or double-deck type cover that rests on the liquid surface.

*Gas-tight* means operated with no detectable emissions.

*Individual drain system* means all process drains connected to the first common downstream junction box. The term includes all such drains and common junction box, together with their associated sewer lines and other junction boxes, down to the receiving oil-water separator.

*Junction box* means a manhole or access point to a wastewater sewer system line.

*No detectable emissions* means less than 500 ppm above background levels, as measured by a detection instrument in accordance with Method 21 in appendix A of 40 CFR part 60.

*Non-contact cooling water system* means a once-through drain, collection and treatment system designed and operated for collecting cooling water which does not come into contact with hydrocarbons or oily wastewater and which is not recirculated through a cooling tower.

*Oil-water separator* means wastewater treatment equipment used to separate oil from water consisting of a separation tank, which also includes the forebay and other separator basins, skimmers, weirs, grit chambers, and sludge hoppers. Slop oil facilities, including tanks, are included in this term along with storage vessels and auxiliary equipment located between individual drain systems and the oil-water separator. This term does not include storage vessels or auxiliary equipment which do not come in contact with or store oily wastewater.

*Oily wastewater* means wastewater generated during the refinery process which contains oil, emulsified oil, or other hydrocarbons. Oily wastewater originates from a variety of refinery processes including cooling water, condensed stripping steam, tank draw-off, and contact process water.

*Petroleum* means the crude oil removed from the earth and the oils derived from tar sands, shale, and coal.

*Petroleum refinery* means any facility engaged in producing gasoline, kerosene, distillate fuel oils, residual fuel oils, lubricants, or other products through the distillation of petroleum, or through the redistillation of petroleum, cracking, or reforming unfinished petroleum derivatives.

*Sewer line* means a lateral, trunk line, branch line, ditch, channel, or other conduit used to convey refinery wastewater to downstream components of a refinery wastewater treatment system. This term does not include buried, below-grade sewer lines.

*Slop oil* means the floating oil and solids that accumulate on the surface of an oil-water separator.

*Storage vessel* means any tank, reservoir, or container used for the storage of petroleum liquids, including oily wastewater.

*Stormwater sewer system* means a drain and collection system designed and operated for the sole purpose of collecting stormwater and which is segregated from the process wastewater collection system.

*Wastewater system* means any component, piece of equipment, or installation that receives, treats, or processes oily wastewater from petroleum refinery process units.

*Water seal controls* means a seal pot, p-leg trap, or other type of trap filled with water that has a design capability to create a water barrier between the sewer and the atmosphere.

[53 FR 47623, Nov. 23, 1985, as amended at 60 FR 43259, Aug. 18, 1995]

**§ 60.692-1 Standards: General.**

(a) Each owner or operator subject to the provisions of this subpart shall comply with the requirements of §§ 60.692-1 to 60.692-5 and with §§ 60.693-1 and 60.693-2, except during periods of startup, shutdown, or malfunction.

(b) Compliance with §§ 60.692-1 to 60.692-5 and with §§ 60.693-1 and 60.693-2 will be determined by review of records and reports, review of performance test results, and inspection using the methods and procedures specified in § 60.696.

(c) Permission to use alternative means of emission limitation to meet the requirements of §§ 60.692-2 through 60.692-4 may be granted as provided in § 60.694.

(d)(1) Stormwater sewer systems are not subject to the requirements of this subpart.

(2) Ancillary equipment, which is physically separate from the wastewater system and does not come in contact with or store oily wastewater, is not subject to the requirements of this subpart.

(3) Non-contact cooling water systems are not subject to the requirements of this subpart.

(4) An owner or operator shall demonstrate compliance with the exclusions in paragraphs (d)(1), (2), and (3) of this section as provided in § 60.697 (h), (i), and (j).

**§ 60.692-2 Standards: Individual drain systems.**

(a)(1) Each drain shall be equipped with water seal controls.

(2) Each drain in active service shall be checked by visual or physical inspection initially and monthly thereafter for indications of low water levels or other conditions that would reduce the effectiveness of the water seal controls.

(3) Except as provided in paragraph (a)(4) of this section, each drain out of active service shall be checked by visual or physical inspection initially and weekly thereafter for indications of low water levels or other problems that could result in VOC emissions.

(4) As an alternative to the requirements in paragraph (a)(3) of this section, if an owner or operator elects to install a tightly sealed cap or plug over a drain that is out of service, inspections shall be conducted initially and semiannually to ensure caps or plugs are in place and properly installed.

(5) Whenever low water levels or missing or improperly installed caps or plugs are identified, water shall be added or first efforts at repair shall be made as soon as practicable, but not later than 24 hours after detection, except as provided in § 60.692-6.

(b)(1) Junction boxes shall be equipped with a cover and may have an open vent pipe. The vent pipe shall be at least 90 cm (3 ft) in length and shall not exceed 10.2 cm (4 in) in diameter.

(2) Junction box covers shall have a tight seal around the edge and shall be kept in place at all times, except during inspection and maintenance.

(3) Junction boxes shall be visually inspected initially and semiannually thereafter to ensure that the cover is in place and to ensure that the cover has a tight seal around the edge.

(4) If a broken seal or gap is identified, first effort at repair shall be made as soon as practicable, but not later than 15 calendar days after the broken seal or gap is identified, except as provided in § 60.692-6.

(c)(1) Sewer lines shall not be open to the atmosphere and shall be covered or enclosed in a manner so as to have no visual gaps or cracks in joints, seals, or other emission interfaces.

(2) The portion of each unburied sewer line shall be visually inspected initially and semiannually thereafter for indication of cracks, gaps, or other problems that could result in VOC emissions.

(3) Whenever cracks, gaps, or other problems are detected, repairs shall be made as soon as practicable, but not later than 15 calendar days after identification, except as provided in § 60.692-6.

(d) Except as provided in paragraph (e) of this section, each modified or reconstructed individual drain system that has a catch basin in the existing configuration prior to May 4, 1987 shall be exempt from the provisions of this section.

(e) Refinery wastewater routed through new process drains and a new first common downstream junction box, either as part of a new individual drain system or an existing individual drain system, shall not be routed through a downstream catch basin.

**§ 60.692-3 Standards: Oil-water separators.**

(a) Each oil-water separator tank, slop oil tank, storage vessel, or other auxiliary equipment subject to the requirements of this subpart shall be equipped and operated with a fixed roof, which meets the following specifications, except as provided in paragraph (d) of this section or in § 60.693-2.

(1) The fixed roof shall be installed to completely cover the separator tank, slop oil tank, storage vessel, or other auxiliary equipment with no separation between the roof and the wall.

(2) The vapor space under a fixed roof shall not be purged unless the vapor is directed to a control device.

(3) If the roof has access doors or openings, such doors or openings shall be gasketed, latched, and kept closed at all times during operation of the separator system, except during inspection and maintenance.

(4) Roof seals, access doors, and other openings shall be checked by visual inspection initially and semiannually thereafter to ensure that no cracks or gaps occur between the roof and wall and that access doors and other openings are closed and gasketed properly.

(5) When a broken seal or gasket or other problem is identified, first efforts at repair shall be made as soon as practicable, but not later than 15 calendar days after it is identified, except as provided in § 60.692-6.

(b) Each oil-water separator tank or auxiliary equipment with a design capacity to treat more than 16 liters per second (250 gallons per minute (gpm)) of refinery wastewater shall, in addition to the requirements in paragraph (a) of this section, be equipped and operated with a closed vent system and control device, which meet the requirements of § 60.692-5, except as provided in paragraph (c) of this section or in § 60.693-2.

(c)(1) Each modified or reconstructed oil-water separator tank with a maximum design capacity to treat less than 38 liters per second (600 gpm) of refinery wastewater which was equipped and operated with a fixed roof covering the entire separator tank or a portion of the separator tank prior to May 4, 1987 shall be exempt from the requirements of paragraph (b) of this section, but shall meet the requirements of paragraph (a) of this section, or may elect to comply with paragraph (c)(2) of this section.

(2) The owner or operator may elect to comply with the requirements of paragraph (a) of this section for the existing fixed roof covering a portion of the separator tank and comply with the requirements for floating roofs in § 60.693-2 for the remainder of the separator tank.

(d) Storage vessels, including slop oil tanks and other auxiliary tanks that are subject to the standards in §§ 60.112, 60.112a, and 60.112b and associated requirements, 40 CFR part 60, subparts K, Ka, or Kb are not subject to the requirements of this section.

(e) Slop oil from an oil-water separator tank and oily wastewater from slop oil handling equipment shall be collected, stored, transported, recycled, reused, or disposed of in an enclosed system. Once slop oil is returned to the process

unit or is disposed of, it is no longer within the scope of this subpart. Equipment used in handling slop oil shall be equipped with a fixed roof meeting the requirements of paragraph (a) of this section.

(f) Each oil-water separator tank, slop oil tank, storage vessel, or other auxiliary equipment that is required to comply with paragraph (a) of this section, and not paragraph (b) of this section, may be equipped with a pressure control valve as necessary for proper system operation. The pressure control valve shall be set at the maximum pressure necessary for proper system operation, but such that the value will not vent continuously.

[53 FR 47623, Nov. 23, 1985, as amended at 60 FR 43259, Aug. 18, 1995; 65 FR 61778, Oct. 17, 2000]

**§ 60.692-4 Standards: Aggregate facility.**

A new, modified, or reconstructed aggregate facility shall comply with the requirements of §§ 60.692-2 and 60.692-3.

**§ 60.692-5 Standards: Closed vent systems and control devices.**

(a) Enclosed combustion devices shall be designed and operated to reduce the VOC emissions vented to them with an efficiency of 95 percent or greater or to provide a minimum residence time of 0.75 seconds at a minimum temperature of 816 °C (1,500 °F).

(b) Vapor recovery systems (for example, condensers and adsorbers) shall be designed and operated to recover the VOC emissions vented to them with an efficiency of 95 percent or greater.

(c) Flares used to comply with this subpart shall comply with the requirements of 40 CFR 60.18.

(d) Closed vent systems and control devices used to comply with provisions of this subpart shall be operated at all times when emissions may be vented to them.

(e)(1) Closed vent systems shall be designed and operated with no detectable emissions, as indicated by an instrument reading of less than 500 ppm above background, as determined during the initial and semiannual inspections by the methods specified in § 60.696.

(2) Closed vent systems shall be purged to direct vapor to the control device.

(3) A flow indicator shall be installed on a vent stream to a control device to ensure that the vapors are being routed to the device.

(4) All gauging and sampling devices shall be gas-tight except when gauging or sampling is taking place.

(5) When emissions from a closed system are detected, first efforts at repair to eliminate the emissions shall be made as soon as practicable, but not later than 30 calendar days from the date the emissions are detected, except as provided in § 60.692-6.

**§ 60.692-6 Standards: Delay of repair.**

(a) Delay of repair of facilities that are subject to the provisions of this subpart will be allowed if the repair is technically impossible without a complete or partial refinery or process unit shutdown.

(b) Repair of such equipment shall occur before the end of the next refinery or process unit shutdown.

**§ 60.692-7 Standards: Delay of compliance.**

(a) Delay of compliance of modified individual drain systems with ancillary downstream treatment components will be allowed if compliance with the provisions of this subpart cannot be achieved without a refinery or process unit shutdown.

(b) Installation of equipment necessary to comply with the provisions of this subpart shall occur no later than the next scheduled refinery or process unit shutdown.

**§ 60.693-1 Alternative standards for individual drain systems.**

(a) An owner or operator may elect to construct and operate a completely closed drain system.

(b) Each completely closed drain system shall be equipped and operated with a closed vent system and control device complying with the requirements of § 60.692-5.

(c) An owner or operator must notify the Administrator in the report required in 40 CFR 60.7 that the owner or operator has elected to construct and operate a completely closed drain system.

(d) If an owner or operator elects to comply with the provisions of this section, then the owner or operator does not need to comply with the provisions of § 60.692-2 or § 60.694.

(e)(1) Sewer lines shall not be open to the atmosphere and shall be covered or enclosed in a manner so as to have no visual gaps or cracks in joints, seals, or other emission interfaces.

(2) The portion of each unburied sewer line shall be visually inspected initially and semiannually thereafter for indication of cracks, gaps, or other problems that could result in VOC emissions.

(3) Whenever cracks, gaps, or other problems are detected, repairs shall be made as soon as practicable, but not later than 15 calendar days after identification, except as provided in § 60.692-6.

**§ 60.693-2 Alternative standards for oil-water separators.**

(a) An owner or operator may elect to construct and operate a floating roof on an oil-water separator tank, slop oil tank, storage vessel, or other auxiliary equipment subject to the requirements of this subpart which meets the following specifications.

(1) Each floating roof shall be equipped with a closure device between the wall of the separator and the roof edge. The closure device is to consist of a primary seal and a secondary seal.

(i) The primary seal shall be a liquid-mounted seal or a mechanical shoe seal.

(A) A liquid-mounted seal means a foam- or liquid-filled seal mounted in contact with the liquid between the wall of the separator and the floating roof. A mechanical shoe seal means a metal sheet held vertically against the wall of the separator by springs or weighted levers and is connected by braces to the floating roof. A flexible coated fabric (envelope) spans the annular space between the metal sheet and the floating roof.

(B) The gap width between the primary seal and the separator wall shall not exceed 3.8 cm (1.5 in.) at any point.

(C) The total gap area between the primary seal and the separator wall shall not exceed 67 $cm^2$ /m (3.2 $in.^2$ /ft) of separator wall perimeter.

(ii) The secondary seal shall be above the primary seal and cover the annular space between the floating roof and the wall of the separator.

(A) The gap width between the secondary seal and the separator wall shall not exceed 1.3 cm (0.5 in.) at any point.

(B) The total gap area between the secondary seal and the separator wall shall not exceed 6.7 $cm^2$ /m (0.32 $in.^2$ /ft) of separator wall perimeter.

(iii) The maximum gap width and total gap area shall be determined by the methods and procedures specified in § 60.696(d).

(A) Measurement of primary seal gaps shall be performed within 60 calendar days after initial installation of the floating roof and introduction of refinery wastewater and once every 5 years thereafter.

(B) Measurement of secondary seal gaps shall be performed within 60 calendar days of initial introduction of refinery wastewater and once every year thereafter.

(iv) The owner or operator shall make necessary repairs within 30 calendar days of identification of seals not meeting the requirements listed in paragraphs (a)(1) (i) and (ii) of this section.

(2) Except as provided in paragraph (a)(4) of this section, each opening in the roof shall be equipped with a gasketed cover, seal, or lid, which shall be maintained in a closed position at all times, except during inspection and maintenance.

(3) The roof shall be floating on the liquid (i.e., off the roof supports) at all times except during abnormal conditions (i.e., low flow rate).

(4) The floating roof may be equipped with one or more emergency roof drains for removal of stormwater. Each emergency roof drain shall be fitted with a slotted membrane fabric cover that covers at least 90 percent of the drain opening area or a flexible fabric sleeve seal.

(5)(i) Access doors and other openings shall be visually inspected initially and semiannually thereafter to ensure that there is a tight fit around the edges and to identify other problems that could result in VOC emissions.

(ii) When a broken seal or gasket on an access door or other opening is identified, it shall be repaired as soon as practicable, but not later than 30 calendar days after it is identified, except as provided in § 60.692-6.

(b) An owner or operator must notify the Administrator in the report required by 40 CFR 60.7 that the owner or operator has elected to construct and operate a floating roof under paragraph (a) of this section.

(c) For portions of the oil-water separator tank where it is infeasible to construct and operate a floating roof, such as the skimmer mechanism and weirs, a fixed roof meeting the requirements of § 60.692-3(a) shall be installed.

(d) Except as provided in paragraph (c) of this section, if an owner or operator elects to comply with the provisions of this section, then the owner or operator does not need to comply with the provisions of §§ 60.692-3 or 60.694 applicable to the same facilities.

[53 FR 47623, Nov. 23, 1985, as amended at 60 FR 43259, Aug. 18, 1995]

**§ 60.694 Permission to use alternative means of emission limitation.**

(a) If, in the Administrator's judgment, an alternative means of emission limitation will achieve a reduction in VOC emissions at least equivalent to the reduction in VOC emissions achieved by the applicable requirement in § 60.692, the Administrator will publish in the FEDERAL REGISTER a notice permitting the use of the alternative means for purposes of compliance with that requirement. The notice may condition the permission on requirements related to the operation and maintenance of the alternative means.

(b) Any notice under paragraph (a) of this section shall be published only after notice and an opportunity for a hearing.

(c) Any person seeking permission under this section shall collect, verify, and submit to the Administrator information showing that the alternative means achieves equivalent emission reductions.

**§ 60.695 Monitoring of operations.**

(a) Each owner or operator subject to the provisions of this subpart shall install, calibrate, maintain, and operate according to manufacturer's specifications the following equipment, unless alternative monitoring procedures or requirements are approved for that facility by the Administrator.

(1) Where a thermal incinerator is used for VOC emission reduction, a temperature monitoring device equipped with a continuous recorder shall be used to measure the temperature of the gas stream in the combustion zone of the incinerator. The temperature monitoring device shall have an accuracy of ±1 percent of the temperature being measured, expressed in °C, or ±0.5 °C (0.9 °F), whichever is greater.

(2) Where a catalytic incinerator is used for VOC emission reduction, temperature monitoring devices, each equipped with a continuous recorder shall be used to measure the temperature in the gas stream immediately before and after the catalyst bed of the incinerator. The temperature monitoring devices shall have an accuracy of ±1 percent of the temperature being measured, expressed in °C, or ±0.5 °C (0.9 °F), whichever is greater.

(3) Where a carbon adsorber is used for VOC emissions reduction, a monitoring device that continuously indicates and records the VOC concentration level or reading of organics in the exhaust gases of the control device outlet gas stream or inlet and outlet gas stream shall be used.

(i) For a carbon adsorption system that regenerates the carbon bed directly onsite, a monitoring device that continuously indicates and records the volatile organic compound concentration level or reading of organics in the exhaust gases of the control device outlet gas stream or inlet and outlet gas stream shall be used.

(ii) For a carbon adsorption system that does not regenerate the carbon bed directly onsite in the control device (e.g., a carbon canister), the concentration level of the organic compounds in the exhaust vent stream from the carbon adsorption system shall be monitored on a regular schedule, and the existing carbon shall be replaced with fresh carbon immediately when carbon breakthrough is indicated. The device shall be monitored on a daily basis or at intervals no greater than 20 percent of the design carbon replacement interval, whichever is greater. As an alternative to conducting this monitoring, an owner or operator may replace the carbon in the carbon adsorption system with fresh carbon at a regular predetermined time interval that is less than the carbon replacement interval that is determined by the maximum design flow rate and organic concentration in the gas stream vented to the carbon adsorption system.

(4) Where a flare is used for VOC emission reduction, the owner or operator shall comply with the monitoring requirements of 40 CFR 60.18(f)(2).

(b) Where a VOC recovery device other than a carbon adsorber is used to meet the requirements specified in § 60.692-5(a), the owner or operator shall provide to the Administrator information describing the operation of the control device and the process parameter(s) that would indicate proper operation and maintenance of the device. The Administrator may request further information and will specify appropriate monitoring procedures or requirements.

(c) An alternative operational or process parameter may be monitored if it can be demonstrated that another parameter will ensure that the control device is operated in conformance with these standards and the control device's design specifications.

[53 FR 47623, Nov. 23, 1985, as amended at 60 FR 43259, Aug. 18, 1995; 65 FR 61778, Oct. 17, 2000]

**§ 60.696 Performance test methods and procedures and compliance provisions.**

(a) Before using any equipment installed in compliance with the requirements of § 60.692-2, § 60.692-3, § 60.692-4, § 60.692-5, or § 60.693, the owner or operator shall inspect such equipment for indications of potential emissions, defects, or other problems that may cause the requirements of this subpart not to be met. Points of inspection shall include, but are not limited to, seals, flanges, joints, gaskets, hatches, caps, and plugs.

(b) The owner or operator of each source that is equipped with a closed vent system and control device as required in § 60.692-5 (other than a flare) is exempt from § 60.8 of the General Provisions and shall use Method 21 to measure

the emission concentrations, using 500 ppm as the no detectable emission limit. The instrument shall be calibrated each day before using. The calibration gases shall be:

(1) Zero air (less than 10 ppm of hydrocarbon in air), and

(2) A mixture of either methane or n-hexane and air at a concentration of approximately, but less than, 10,000 ppm methane or n-hexane.

(c) The owner or operator shall conduct a performance test initially, and at other times as requested by the Administrator, using the test methods and procedures in § 60.18(f) to determine compliance of flares.

(d) After installing the control equipment required to meet § 60.693-2(a) or whenever sources that have ceased to treat refinery wastewater for a period of 1 year or more are placed back into service, the owner or operator shall determine compliance with the standards in § 60.693-2(a) as follows:

(1) The maximum gap widths and maximum gap areas between the primary seal and the separator wall and between the secondary seal and the separator wall shall be determined individually within 60 calendar days of the initial installation of the floating roof and introduction of refinery wastewater or 60 calendar days after the equipment is placed back into service using the following procedure when the separator is filled to the design operating level and when the roof is floating off the roof supports.

(i) Measure seal gaps around the entire perimeter of the separator in each place where a 0.32 cm (0.125 in.) diameter uniform probe passes freely (without forcing or binding against seal) between the seal and the wall of the separator and measure the gap width and perimetrical distance of each such location.

(ii) The total surface area of each gap described in (d)(1)(i) of this section shall be determined by using probes of various widths to measure accurately the actual distance from the wall to the seal and multiplying each such width by its respective perimetrical distance.

(iii) Add the gap surface area of each gap location for the primary seal and the secondary seal individually, divide the sum for each seal by the nominal perimeter of the separator basin and compare each to the maximum gap area as specified in § 60.693-2.

(2) The gap widths and total gap area shall be determined using the procedure in paragraph (d)(1) of this section according to the following frequency:

(i) For primary seals, once every 5 years.

(ii) For secondary seals, once every year.

**§ 60.697 Recordkeeping requirements.**

(a) Each owner or operator of a facility subject to the provisions of this subpart shall comply with the recordkeeping requirements of this section. All records shall be retained for a period of 2 years after being recorded unless otherwise noted.

(b)(1) For individual drain systems subject to § 60.692-2, the location, date, and corrective action shall be recorded for each drain when the water seal is dry or otherwise breached, when a drain cap or plug is missing or improperly installed, or other problem is identified that could result in VOC emissions, as determined during the initial and periodic visual or physical inspection.

(2) For junction boxes subject to § 60.692-2, the location, date, and corrective action shall be recorded for inspections required by § 60.692-2(b) when a broken seal, gap, or other problem is identified that could result in VOC emissions.

(3) For sewer lines subject to §§ 60.692-2 and 60.693-1(e), the location, date, and corrective action shall be recorded for inspections required by §§ 60.692-2(c) and 60.693-1(e) when a problem is identified that could result in VOC emissions.

(c) For oil-water separators subject to § 60.692-3, the location, date, and corrective action shall be recorded for inspections required by § 60.692-3(a) when a problem is identified that could result in VOC emissions.

(d) For closed vent systems subject to § 60.692-5 and completely closed drain systems subject to § 60.693-1, the location, date, and corrective action shall be recorded for inspections required by § 60.692-5(e) during which detectable emissions are measured or a problem is identified that could result in VOC emissions.

(e)(1) If an emission point cannot be repaired or corrected without a process unit shutdown, the expected date of a successful repair shall be recorded.

(2) The reason for the delay as specified in § 60.692-6 shall be recorded if an emission point or equipment problem is not repaired or corrected in the specified amount of time.

(3) The signature of the owner or operator (or designee) whose decision it was that repair could not be effected without refinery or process shutdown shall be recorded.

(4) The date of successful repair or corrective action shall be recorded.

(f)(1) A copy of the design specifications for all equipment used to comply with the provisions of this subpart shall be kept for the life of the source in a readily accessible location.

(2) The following information pertaining to the design specifications shall be kept.

(i) Detailed schematics, and piping and instrumentation diagrams.

(ii) The dates and descriptions of any changes in the design specifications.

(3) The following information pertaining to the operation and maintenance of closed drain systems and closed vent systems shall be kept in a readily accessible location.

(i) Documentation demonstrating that the control device will achieve the required control efficiency during maximum loading conditions shall be kept for the life of the facility. This documentation is to include a general description of the gas streams that enter the control device, including flow and volatile organic compound content under varying liquid level conditions (dynamic and static) and manufacturer's design specifications for the control device. If an enclosed combustion device with a minimum residence time of 0.75 seconds and a minimum temperature of 816 °C (1,500 °F) is used to meet the 95-percent requirement, documentation that those conditions exist is sufficient to meet the requirements of this paragraph.

(ii) For a carbon adsorption system that does not regenerate the carbon bed directly onsite in the control device such as a carbon canister, the design analysis shall consider the vent stream composition, constituent concentrations, flow rate, relative humidity, and temperature. The design analysis shall also establish the design exhaust vent stream organic compound concentration level, capacity of carbon bed, type and working capacity of activated carbon used for carbon bed, and design carbon replacement interval based on the total carbon working capacity of the control device and source operating schedule.

(iii) Periods when the closed vent systems and control devices required in § 60.692 are not operated as designed, including periods when a flare pilot does not have a flame shall be recorded and kept for 2 years after the information is recorded.

(iv) Dates of startup and shutdown of the closed vent system and control devices required in § 60.692 shall be recorded and kept for 2 years after the information is recorded.

(v) The dates of each measurement of detectable emissions required in §§ 60.692, 60.693, or 60.692-5 shall be recorded and kept for 2 years after the information is recorded.

(vi) The background level measured during each detectable emissions measurement shall be recorded and kept for 2 years after the information is recorded.

(vii) The maximum instrument reading measured during each detectable emission measurement shall be recorded and kept for 2 years after the information is recorded.

(viii) Each owner or operator of an affected facility that uses a thermal incinerator shall maintain continuous records of the temperature of the gas stream in the combustion zone of the incinerator and records of all 3-hour periods of operation during which the average temperature of the gas stream in the combustion zone is more than 28 °C (50 °F) below the design combustion zone temperature, and shall keep such records for 2 years after the information is recorded.

(ix) Each owner or operator of an affected facility that uses a catalytic incinerator shall maintain continuous records of the temperature of the gas stream both upstream and downstream of the catalyst bed of the incinerator, records of all 3-hour periods of operation during which the average temperature measured before the catalyst bed is more than 28 °C (50 °F) below the design gas stream temperature, and records of all 3-hour periods during which the average temperature difference across the catalyst bed is less than 80 percent of the design temperature difference, and shall keep such records for 2 years after the information is recorded.

(x) Each owner or operator of an affected facility that uses a carbon adsorber shall maintain continuous records of the VOC concentration level or reading of organics of the control device outlet gas stream or inlet and outlet gas stream and records of all 3-hour periods of operation during which the average VOC concentration level or reading of organics in the exhaust gases, or inlet and outlet gas stream, is more than 20 percent greater than the design exhaust gas concentration level, and shall keep such records for 2 years after the information is recorded.

(A) Each owner or operator of an affected facility that uses a carbon adsorber which is regenerated directly onsite shall maintain continuous records of the volatile organic compound concentration level or reading of organics of the control device outlet gas stream or inlet and outlet gas stream and records of all 3-hour periods of operation during which the average volatile organic compound concentration level or reading of organics in the exhaust gases, or inlet and outlet gas stream, is more than 20 percent greater than the design exhaust gas concentration level, and shall keep such records for 2 years after the information is recorded.

(B) If a carbon adsorber that is not regenerated directly onsite in the control device is used, then the owner or operator shall maintain records of dates and times when the control device is monitored, when breakthrough is measured, and shall record the date and time that the existing carbon in the control device is replaced with fresh carbon.

(g) If an owner or operator elects to install a tightly sealed cap or plug over a drain that is out of active service, the owner or operator shall keep for the life of a facility in a readily accessible location, plans or specifications which indicate the location of such drains.

(h) For stormwater sewer systems subject to the exclusion in § 60.692-1(d)(1), an owner or operator shall keep for the life of the facility in a readily accessible location, plans or specifications which demonstrate that no wastewater from any process units or equipment is directly discharged to the stormwater sewer system.

(i) For ancillary equipment subject to the exclusion in § 60.692-1(d)(2), an owner or operator shall keep for the life of a facility in a readily accessible location, plans or specifications which demonsrate that the ancillary equipment does not come in contact with or store oily wastewater.

(j) For non-contact cooling water systems subject to the exclusion in § 60.692-1(d)(3), an owner or operator shall keep for the life of the facility in a readily accessible location, plans or specifications which demonstrate that the cooling water does not contact hydrocarbons or oily wastewater and is not recirculated through a cooling tower.

(k) For oil-water separators subject to § 60.693-2, the location, date, and corrective action shall be recorded for inspections required by §§ 60.693-2(a)(1)(iii)(A) and (B), and shall be maintained for the time period specified in paragraphs (k)(1) and (2) of this section.

(1) For inspections required by § 60.693-2(a)(1)(iii)(A), ten years after the information is recorded.

(2) For inspections required by § 60.693-2(a)(1)(iii)(B), two years after the information is recorded.

[53 FR 47623, Nov. 23, 1985, as amended at 60 FR 43259, Aug. 18, 1995; 65 FR 61778, Oct. 17, 2000]

**§ 60.698 Reporting requirements.**

(a) An owner or operator electing to comply with the provisions of § 60.693 shall notify the Administrator of the alternative standard selected in the report required in § 60.7.

(b)(1) Each owner or operator of a facility subject to this subpart shall submit to the Administrator within 60 days after initial startup a certification that the equipment necessary to comply with these standards has been installed and that the required initial inspections or tests of process drains, sewer lines, junction boxes, oil-water separators, and closed vent systems and control devices have been carried out in accordance with these standards. Thereafter, the owner or operator shall submit to the Administrator semiannually a certification that all of the required inspections have been carried out in accordance with these standards.

(2) Each owner or operator of an affected facility that uses a flare shall submit to the Administrator within 60 days after initial startup, as required under § 60.8(a), a report of the results of the performance test required in § 60.696(c).

(c) A report that summarizes all inspections when a water seal was dry or otherwise breached, when a drain cap or plug was missing or improperly installed, or when cracks, gaps, or other problems were identified that could result in VOC emissions, including information about the repairs or corrective action taken, shall be submitted initially and semiannually thereafter to the Administrator.

(d) As applicable, a report shall be submitted semiannually to the Administrator that indicates:

(1) Each 3-hour period of operation during which the average temperature of the gas stream in the combustion zone of a thermal incinerator, as measured by the temperature monitoring device, is more than 28 °C (50 °F) below the design combustion zone temperature,

(2) Each 3-hour period of operation during which the average temperature of the gas stream immediately before the catalyst bed of a catalytic incinerator, as measured by the temperature monitoring device, is more than 28 °C (50 °F) below the design gas stream temperature, and any 3-hour period during which the average temperature difference across the catalyst bed (i.e., the difference between the temperatures of the gas stream immediately before and after the catalyst bed), as measured by the temperature monitoring device, is less than 80 percent of the design temperature difference, or,

(3) Each 3-hour period of operation during which the average VOC concentration level or reading of organics in the exhaust gases from a carbon adsorber is more than 20 percent greater than the design exhaust gas concentration level or reading.

(i) Each 3-hour period of operation during which the average volatile organic compound concentration level or reading of organics in the exhaust gases from a carbon adsorber which is regenerated directly onsite is more than 20 percent greater than the design exhaust gas concentration level or reading.

(ii) Each occurrence when the carbon in a carbon adsorber system that is not regenerated directly onsite in the control device is not replaced at the predetermined interval specified in § 60.695(a)(3)(ii).

(e) If compliance with the provisions of this subpart is delayed pursuant to § 60.692-7, the notification required under 40 CFR 60.7(a)(4) shall include the estimated date of the next scheduled refinery or process unit shutdown after the

date of notification and the reason why compliance with the standards is technically impossible without a refinery or process unit shutdown.

[53 FR 47623, Nov. 23, 1988, as amended at 60 FR 43260, Aug. 18, 1995]

**§ 60.699 Delegation of authority.**

(a) In delegating implementation and enforcement authority to a State under section 111(c) of the Act, the authorities contained in paragraph (b) of this section shall be retained by the Administrator and not transferred to a State.

(b) Authorities which will not be delegated to States:

§ 60.694 Permission to use alternative means of emission limitations.

[53 FR 47623, Nov. 23, 1985]

**Attachment G**
**To Part 70 Operating Permit Renewal No. T129-25424-00003**

[Downloaded from the eCFR on May 13, 2013]

**Electronic Code of Federal Regulations**

**Title 40: Protection of Environment**

**Subpart Dc—Standards of Performance for Small Industrial-Commercial-Institutional Steam Generating Units**

Source: 72 FR 32759, June 13, 2007, unless otherwise noted.

**§ 60.40c Applicability and delegation of authority.**

(a) Except as provided in paragraphs (d), (e), (f), and (g) of this section, the affected facility to which this subpart applies is each steam generating unit for which construction, modification, or reconstruction is commenced after June 9, 1989 and that has a maximum design heat input capacity of 29 megawatts (MW) (100 million British thermal units per hour (MMBtu/h)) or less, but greater than or equal to 2.9 MW (10 MMBtu/h).

(b) In delegating implementation and enforcement authority to a State under section 111(c) of the Clean Air Act, § 60.48c(a)(4) shall be retained by the Administrator and not transferred to a State.

(c) Steam generating units that meet the applicability requirements in paragraph (a) of this section are not subject to the sulfur dioxide ($SO_2$ ) or particulate matter (PM) emission limits, performance testing requirements, or monitoring requirements under this subpart (§§ 60.42c, 60.43c, 60.44c, 60.45c, 60.46c, or 60.47c) during periods of combustion research, as defined in § 60.41c.

(d) Any temporary change to an existing steam generating unit for the purpose of conducting combustion research is not considered a modification under § 60.14.

(e) Affected facilities ( *i.e.* heat recovery steam generators and fuel heaters) that are associated with stationary combustion turbines and meet the applicability requirements of subpart KKKK of this part are not subject to this subpart. This subpart will continue to apply to all other heat recovery steam generators, fuel heaters, and other affected facilities that are capable of combusting more than or equal to 2.9 MW (10 MMBtu/h) heat input of fossil fuel but less than or equal to 29 MW (100 MMBtu/h) heat input of fossil fuel. If the heat recovery steam generator, fuel heater, or other affected facility is subject to this subpart, only emissions resulting from combustion of fuels in the steam generating unit are subject to this subpart. (The stationary combustion turbine emissions are subject to subpart GG or KKKK, as applicable, of this part.)

(f) Any affected facility that meets the applicability requirements of and is subject to subpart AAAA or subpart CCCC of this part is not subject to this subpart.

(g) Any facility that meets the applicability requirements and is subject to an EPA approved State or Federal section 111(d)/129 plan implementing subpart BBBB of this part is not subject to this subpart.

(h) Affected facilities that also meet the applicability requirements under subpart J or subpart Ja of this part are subject to the PM and $NO_X$ standards under this subpart and the $SO_2$ standards under subpart J or subpart Ja of this part, as applicable.

(i) Temporary boilers are not subject to this subpart.

[72 FR 32759, June 13, 2007, as amended at 74 FR 5090, Jan. 28, 2009; 77 FR 9461, Feb. 16, 2012]

**§ 60.41c Definitions.**

As used in this subpart, all terms not defined herein shall have the meaning given them in the Clean Air Act and in subpart A of this part.

*Annual capacity factor* means the ratio between the actual heat input to a steam generating unit from an individual fuel or combination of fuels during a period of 12 consecutive calendar months and the potential heat input to the steam generating unit from all fuels had the steam generating unit been operated for 8,760 hours during that 12-month period at the maximum design heat input capacity. In the case of steam generating units that are rented or leased, the actual heat input shall be determined based on the combined heat input from all operations of the affected facility during a period of 12 consecutive calendar months.

*Coal* means all solid fuels classified as anthracite, bituminous, subbituminous, or lignite by the American Society of Testing and Materials in ASTM D388 (incorporated by reference, see § 60.17), coal refuse, and petroleum coke. Coal-derived synthetic fuels derived from coal for the purposes of creating useful heat, including but not limited to solvent refined coal, gasified coal not meeting the definition of natural gas, coal-oil mixtures, and coal-water mixtures, are also included in this definition for the purposes of this subpart.

*Coal refuse* means any by-product of coal mining or coal cleaning operations with an ash content greater than 50 percent (by weight) and a heating value less than 13,900 kilojoules per kilogram (kJ/kg) (6,000 Btu per pound (Btu/lb) on a dry basis.

*Combined cycle system* means a system in which a separate source (such as a stationary gas turbine, internal combustion engine, or kiln) provides exhaust gas to a steam generating unit.

*Combustion research* means the experimental firing of any fuel or combination of fuels in a steam generating unit for the purpose of conducting research and development of more efficient combustion or more effective prevention or control of air pollutant emissions from combustion, provided that, during these periods of research and development, the heat generated is not used for any purpose other than preheating combustion air for use by that steam generating unit ( *i.e.* , the heat generated is released to the atmosphere without being used for space heating, process heating, driving pumps, preheating combustion air for other units, generating electricity, or any other purpose).

*Conventional technology* means wet flue gas desulfurization technology, dry flue gas desulfurization technology, atmospheric fluidized bed combustion technology, and oil hydrodesulfurization technology.

*Distillate oil* means fuel oil that complies with the specifications for fuel oil numbers 1 or 2, as defined by the American Society for Testing and Materials in ASTM D396 (incorporated by reference, see § 60.17), diesel fuel oil numbers 1 or 2, as defined by the American Society for Testing and Materials in ASTM D975 (incorporated by reference, see § 60.17), kerosine, as defined by the American Society of Testing and Materials in ASTM D3699 (incorporated by reference, see § 60.17), biodiesel as defined by the American Society of Testing and Materials in ASTM D6751 (incorporated by reference, see § 60.17), or biodiesel blends as defined by the American Society of Testing and Materials in ASTM D7467 (incorporated by reference, see § 60.17).

*Dry flue gas desulfurization technology* means a $SO_2$ control system that is located between the steam generating unit and the exhaust vent or stack, and that removes sulfur oxides from the combustion gases of the steam generating unit by contacting the combustion gases with an alkaline reagent and water, whether introduced separately or as a premixed slurry or solution and forming a dry powder material. This definition includes devices where the dry powder material is subsequently converted to another form. Alkaline reagents used in dry flue gas desulfurization systems include, but are not limited to, lime and sodium compounds.

*Duct burner* means a device that combusts fuel and that is placed in the exhaust duct from another source (such as a stationary gas turbine, internal combustion engine, kiln, etc.) to allow the firing of additional fuel to heat the exhaust gases before the exhaust gases enter a steam generating unit.

*Emerging technology* means any $SO_2$ control system that is not defined as a conventional technology under this section, and for which the owner or operator of the affected facility has received approval from the Administrator to operate as an emerging technology under § 60.48c(a)(4).

*Federally enforceable* means all limitations and conditions that are enforceable by the Administrator, including the requirements of 40 CFR parts 60 and 61, requirements within any applicable State implementation plan, and any permit requirements established under 40 CFR 52.21 or under 40 CFR 51.18 and 51.24.

*Fluidized bed combustion technology* means a device wherein fuel is distributed onto a bed (or series of beds) of limestone aggregate (or other sorbent materials) for combustion; and these materials are forced upward in the device by the flow of combustion air and the gaseous products of combustion. Fluidized bed combustion technology includes, but is not limited to, bubbling bed units and circulating bed units.

*Fuel pretreatment* means a process that removes a portion of the sulfur in a fuel before combustion of the fuel in a steam generating unit.

*Heat input* means heat derived from combustion of fuel in a steam generating unit and does not include the heat derived from preheated combustion air, recirculated flue gases, or exhaust gases from other sources (such as stationary gas turbines, internal combustion engines, and kilns).

*Heat transfer medium* means any material that is used to transfer heat from one point to another point.

*Maximum design heat input capacity* means the ability of a steam generating unit to combust a stated maximum amount of fuel (or combination of fuels) on a steady state basis as determined by the physical design and characteristics of the steam generating unit.

*Natural gas* means:

(1) A naturally occurring mixture of hydrocarbon and nonhydrocarbon gases found in geologic formations beneath the earth's surface, of which the principal constituent is methane; or

(2) Liquefied petroleum (LP) gas, as defined by the American Society for Testing and Materials in ASTM D1835 (incorporated by reference, see § 60.17); or

(3) A mixture of hydrocarbons that maintains a gaseous state at ISO conditions. Additionally, natural gas must either be composed of at least 70 percent methane by volume or have a gross calorific value between 34 and 43 megajoules (MJ) per dry standard cubic meter (910 and 1,150 Btu per dry standard cubic foot).

*Noncontinental area* means the State of Hawaii, the Virgin Islands, Guam, American Samoa, the Commonwealth of Puerto Rico, or the Northern Mariana Islands.

*Oil* means crude oil or petroleum, or a liquid fuel derived from crude oil or petroleum, including distillate oil and residual oil.

*Potential sulfur dioxide emission rate* means the theoretical $SO_2$ emissions (nanograms per joule (ng/J) or lb/MMBtu heat input) that would result from combusting fuel in an uncleaned state and without using emission control systems.

*Process heater* means a device that is primarily used to heat a material to initiate or promote a chemical reaction in which the material participates as a reactant or catalyst.

*Residual oil* means crude oil, fuel oil that does not comply with the specifications under the definition of distillate oil, and all fuel oil numbers 4, 5, and 6, as defined by the American Society for Testing and Materials in ASTM D396 (incorporated by reference, see § 60.17).

*Steam generating unit* means a device that combusts any fuel and produces steam or heats water or heats any heat transfer medium. This term includes any duct burner that combusts fuel and is part of a combined cycle system. This term does not include process heaters as defined in this subpart.

*Steam generating unit operating day* means a 24-hour period between 12:00 midnight and the following midnight during which any fuel is combusted at any time in the steam generating unit. It is not necessary for fuel to be combusted continuously for the entire 24-hour period.

*Temporary boiler* means a steam generating unit that combusts natural gas or distillate oil with a potential $SO_2$ emissions rate no greater than 26 ng/J (0.060 lb/MMBtu), and the unit is designed to, and is capable of, being carried or moved from one location to another by means of, for example, wheels, skids, carrying handles, dollies, trailers, or platforms. A steam generating unit is not a temporary boiler if any one of the following conditions exists:

(1) The equipment is attached to a foundation.

(2) The steam generating unit or a replacement remains at a location for more than 180 consecutive days. Any temporary boiler that replaces a temporary boiler at a location and performs the same or similar function will be included in calculating the consecutive time period.

(3) The equipment is located at a seasonal facility and operates during the full annual operating period of the seasonal facility, remains at the facility for at least 2 years, and operates at that facility for at least 3 months each year.

(4) The equipment is moved from one location to another in an attempt to circumvent the residence time requirements of this definition.

*Wet flue gas desulfurization technology* means an $SO_2$ control system that is located between the steam generating unit and the exhaust vent or stack, and that removes sulfur oxides from the combustion gases of the steam generating unit by contacting the combustion gases with an alkaline slurry or solution and forming a liquid material. This definition includes devices where the liquid material is subsequently converted to another form. Alkaline reagents used in wet flue gas desulfurization systems include, but are not limited to, lime, limestone, and sodium compounds.

*Wet scrubber system* means any emission control device that mixes an aqueous stream or slurry with the exhaust gases from a steam generating unit to control emissions of PM or $SO_2$ .

*Wood* means wood, wood residue, bark, or any derivative fuel or residue thereof, in any form, including but not limited to sawdust, sanderdust, wood chips, scraps, slabs, millings, shavings, and processed pellets made from wood or other forest residues.

[72 FR 32759, June 13, 2007, as amended at 74 FR 5090, Jan. 28, 2009; 77 FR 9461, Feb. 16, 2012]

**§ 60.42c Standard for sulfur dioxide (SO2 ).**

(a) Except as provided in paragraphs (b), (c), and (e) of this section, on and after the date on which the performance test is completed or required to be completed under § 60.8, whichever date comes first, the owner or operator of an affected facility that combusts only coal shall neither: cause to be discharged into the atmosphere from the affected facility any gases that contain $SO_2$ in excess of 87 ng/J (0.20 lb/MMBtu) heat input or 10 percent (0.10) of the potential $SO_2$ emission rate (90 percent reduction), nor cause to be discharged into the atmosphere from the affected facility any gases that contain $SO_2$ in excess of 520 ng/J (1.2 lb/MMBtu) heat input. If coal is combusted with other fuels, the affected facility shall neither: cause to be discharged into the atmosphere from the affected facility any gases that contain $SO_2$ in excess of 87 ng/J (0.20 lb/MMBtu) heat input or 10 percent (0.10) of the potential $SO_2$ emission rate (90 percent reduction), nor cause to be discharged into the atmosphere from the affected facility any gases that contain $SO_2$ in excess of the emission limit is determined pursuant to paragraph (e)(2) of this section.

(b) Except as provided in paragraphs (c) and (e) of this section, on and after the date on which the performance test is completed or required to be completed under § 60.8, whichever date comes first, the owner or operator of an affected facility that:

(1) Combusts only coal refuse alone in a fluidized bed combustion steam generating unit shall neither:

(i) Cause to be discharged into the atmosphere from that affected facility any gases that contain $SO_2$ in excess of 87 ng/J (0.20 lb/MMBtu) heat input or 20 percent (0.20) of the potential $SO_2$ emission rate (80 percent reduction); nor

(ii) Cause to be discharged into the atmosphere from that affected facility any gases that contain $SO_2$ in excess of $SO_2$ in excess of 520 ng/J (1.2 lb/MMBtu) heat input. If coal is fired with coal refuse, the affected facility subject to paragraph (a) of this section. If oil or any other fuel (except coal) is fired with coal refuse, the affected facility is subject to the 87 ng/J (0.20 lb/MMBtu) heat input $SO_2$ emissions limit or the 90 percent $SO_2$ reduction requirement specified in paragraph (a) of this section and the emission limit is determined pursuant to paragraph (e)(2) of this section.

(2) Combusts only coal and that uses an emerging technology for the control of $SO_2$ emissions shall neither:

(i) Cause to be discharged into the atmosphere from that affected facility any gases that contain $SO_2$ in excess of 50 percent (0.50) of the potential $SO_2$ emission rate (50 percent reduction); nor

(ii) Cause to be discharged into the atmosphere from that affected facility any gases that contain $SO_2$ in excess of 260 ng/J (0.60 lb/MMBtu) heat input. If coal is combusted with other fuels, the affected facility is subject to the 50 percent $SO_2$ reduction requirement specified in this paragraph and the emission limit determined pursuant to paragraph (e)(2) of this section.

(c) On and after the date on which the initial performance test is completed or required to be completed under § 60.8, whichever date comes first, no owner or operator of an affected facility that combusts coal, alone or in combination with any other fuel, and is listed in paragraphs (c)(1), (2), (3), or (4) of this section shall cause to be discharged into the atmosphere from that affected facility any gases that contain $SO_2$ in excess of the emission limit determined pursuant to paragraph (e)(2) of this section. Percent reduction requirements are not applicable to affected facilities under paragraphs (c)(1), (2), (3), or (4).

(1) Affected facilities that have a heat input capacity of 22 MW (75 MMBtu/h) or less;

(2) Affected facilities that have an annual capacity for coal of 55 percent (0.55) or less and are subject to a federally enforceable requirement limiting operation of the affected facility to an annual capacity factor for coal of 55 percent (0.55) or less.

(3) Affected facilities located in a noncontinental area; or

(4) Affected facilities that combust coal in a duct burner as part of a combined cycle system where 30 percent (0.30) or less of the heat entering the steam generating unit is from combustion of coal in the duct burner and 70 percent (0.70) or more of the heat entering the steam generating unit is from exhaust gases entering the duct burner.

(d) On and after the date on which the initial performance test is completed or required to be completed under § 60.8, whichever date comes first, no owner or operator of an affected facility that combusts oil shall cause to be discharged into the atmosphere from that affected facility any gases that contain $SO_2$ in excess of 215 ng/J (0.50 lb/MMBtu) heat input from oil; or, as an alternative, no owner or operator of an affected facility that combusts oil shall combust oil in the affected facility that contains greater than 0.5 weight percent sulfur. The percent reduction requirements are not applicable to affected facilities under this paragraph.

(e) On and after the date on which the initial performance test is completed or required to be completed under § 60.8, whichever date comes first, no owner or operator of an affected facility that combusts coal, oil, or coal and oil with any other fuel shall cause to be discharged into the atmosphere from that affected facility any gases that contain $SO_2$ in excess of the following:

(1) The percent of potential $SO_2$ emission rate or numerical $SO_2$ emission rate required under paragraph (a) or (b)(2) of this section, as applicable, for any affected facility that

(i) Combusts coal in combination with any other fuel;

(ii) Has a heat input capacity greater than 22 MW (75 MMBtu/h); and

(iii) Has an annual capacity factor for coal greater than 55 percent (0.55); and

(2) The emission limit determined according to the following formula for any affected facility that combusts coal, oil, or coal and oil with any other fuel:

$$E_s = \frac{(K_a H_a + K_b H_b + K_c H_c)}{(H_a + H_b + H_c)}$$

Where:

$E_s$ = $SO_2$ emission limit, expressed in ng/J or lb/MMBtu heat input;

$K_a$ = 520 ng/J (1.2 lb/MMBtu);

$K_b$ = 260 ng/J (0.60 lb/MMBtu);

$K_c$ = 215 ng/J (0.50 lb/MMBtu);

$H_a$ = Heat input from the combustion of coal, except coal combusted in an affected facility subject to paragraph (b)(2) of this section, in Joules (J) [MMBtu];

$H_b$ = Heat input from the combustion of coal in an affected facility subject to paragraph (b)(2) of this section, in J (MMBtu); and

$H_c$ = Heat input from the combustion of oil, in J (MMBtu).

(f) Reduction in the potential $SO_2$ emission rate through fuel pretreatment is not credited toward the percent reduction requirement under paragraph (b)(2) of this section unless:

(1) Fuel pretreatment results in a 50 percent (0.50) or greater reduction in the potential $SO_2$ emission rate; and

(2) Emissions from the pretreated fuel (without either combustion or post-combustion $SO_2$ control) are equal to or less than the emission limits specified under paragraph (b)(2) of this section.

(g) Except as provided in paragraph (h) of this section, compliance with the percent reduction requirements, fuel oil sulfur limits, and emission limits of this section shall be determined on a 30-day rolling average basis.

(h) For affected facilities listed under paragraphs (h)(1), (2), (3), or (4) of this section, compliance with the emission limits or fuel oil sulfur limits under this section may be determined based on a certification from the fuel supplier, as described under § 60.48c(f), as applicable.

(1) Distillate oil-fired affected facilities with heat input capacities between 2.9 and 29 MW (10 and 100 MMBtu/hr).

(2) Residual oil-fired affected facilities with heat input capacities between 2.9 and 8.7 MW (10 and 30 MMBtu/hr).

(3) Coal-fired affected facilities with heat input capacities between 2.9 and 8.7 MW (10 and 30 MMBtu/h).

(4) Other fuels-fired affected facilities with heat input capacities between 2.9 and 8.7 MW (10 and 30 MMBtu/h).

(i) The $SO_2$ emission limits, fuel oil sulfur limits, and percent reduction requirements under this section apply at all times, including periods of startup, shutdown, and malfunction.

(j) For affected facilities located in noncontinental areas and affected facilities complying with the percent reduction standard, only the heat input supplied to the affected facility from the combustion of coal and oil is counted under this

section. No credit is provided for the heat input to the affected facility from wood or other fuels or for heat derived from exhaust gases from other sources, such as stationary gas turbines, internal combustion engines, and kilns.

[72 FR 32759, June 13, 2007, as amended at 74 FR 5090, Jan. 28, 2009; 77 FR 9462, Feb. 16, 2012]

**§ 60.43c Standard for particulate matter (PM).**

(a) On and after the date on which the initial performance test is completed or required to be completed under § 60.8, whichever date comes first, no owner or operator of an affected facility that commenced construction, reconstruction, or modification on or before February 28, 2005, that combusts coal or combusts mixtures of coal with other fuels and has a heat input capacity of 8.7 MW (30 MMBtu/h) or greater, shall cause to be discharged into the atmosphere from that affected facility any gases that contain PM in excess of the following emission limits:

(1) 22 ng/J (0.051 lb/MMBtu) heat input if the affected facility combusts only coal, or combusts coal with other fuels and has an annual capacity factor for the other fuels of 10 percent (0.10) or less.

(2) 43 ng/J (0.10 lb/MMBtu) heat input if the affected facility combusts coal with other fuels, has an annual capacity factor for the other fuels greater than 10 percent (0.10), and is subject to a federally enforceable requirement limiting operation of the affected facility to an annual capacity factor greater than 10 percent (0.10) for fuels other than coal.

(b) On and after the date on which the initial performance test is completed or required to be completed under § 60.8, whichever date comes first, no owner or operator of an affected facility that commenced construction, reconstruction, or modification on or before February 28, 2005, that combusts wood or combusts mixtures of wood with other fuels (except coal) and has a heat input capacity of 8.7 MW (30 MMBtu/h) or greater, shall cause to be discharged into the atmosphere from that affected facility any gases that contain PM in excess of the following emissions limits:

(1) 43 ng/J (0.10 lb/MMBtu) heat input if the affected facility has an annual capacity factor for wood greater than 30 percent (0.30); or

(2) 130 ng/J (0.30 lb/MMBtu) heat input if the affected facility has an annual capacity factor for wood of 30 percent (0.30) or less and is subject to a federally enforceable requirement limiting operation of the affected facility to an annual capacity factor for wood of 30 percent (0.30) or less.

(c) On and after the date on which the initial performance test is completed or required to be completed under § 60.8, whichever date comes first, no owner or operator of an affected facility that combusts coal, wood, or oil and has a heat input capacity of 8.7 MW (30 MMBtu/h) or greater shall cause to be discharged into the atmosphere from that affected facility any gases that exhibit greater than 20 percent opacity (6-minute average), except for one 6-minute period per hour of not more than 27 percent opacity. Owners and operators of an affected facility that elect to install, calibrate, maintain, and operate a continuous emissions monitoring system (CEMS) for measuring PM emissions according to the requirements of this subpart and are subject to a federally enforceable PM limit of 0.030 lb/MMBtu or less are exempt from the opacity standard specified in this paragraph (c).

(d) The PM and opacity standards under this section apply at all times, except during periods of startup, shutdown, or malfunction.

(e)(1) On and after the date on which the initial performance test is completed or is required to be completed under § 60.8, whichever date comes first, no owner or operator of an affected facility that commences construction, reconstruction, or modification after February 28, 2005, and that combusts coal, oil, wood, a mixture of these fuels, or a mixture of these fuels with any other fuels and has a heat input capacity of 8.7 MW (30 MMBtu/h) or greater shall cause to be discharged into the atmosphere from that affected facility any gases that contain PM in excess of 13 ng/J (0.030 lb/MMBtu) heat input, except as provided in paragraphs (e)(2), (e)(3), and (e)(4) of this section.

(2) As an alternative to meeting the requirements of paragraph (e)(1) of this section, the owner or operator of an affected facility for which modification commenced after February 28, 2005, may elect to meet the requirements of this paragraph. On and after the date on which the initial performance test is completed or required to be completed under § 60.8, whichever date comes first, no owner or operator of an affected facility that commences modification after February 28, 2005 shall cause to be discharged into the atmosphere from that affected facility any gases that contain PM in excess of both:

(i) 22 ng/J (0.051 lb/MMBtu) heat input derived from the combustion of coal, oil, wood, a mixture of these fuels, or a mixture of these fuels with any other fuels; and

(ii) 0.2 percent of the combustion concentration (99.8 percent reduction) when combusting coal, oil, wood, a mixture of these fuels, or a mixture of these fuels with any other fuels.

(3) On and after the date on which the initial performance test is completed or is required to be completed under § 60.8, whichever date comes first, no owner or operator of an affected facility that commences modification after February 28, 2005, and that combusts over 30 percent wood (by heat input) on an annual basis and has a heat input capacity of 8.7 MW (30 MMBtu/h) or greater shall cause to be discharged into the atmosphere from that affected facility any gases that contain PM in excess of 43 ng/J (0.10 lb/MMBtu) heat input.

(4) An owner or operator of an affected facility that commences construction, reconstruction, or modification after February 28, 2005, and that combusts only oil that contains no more than 0.50 weight percent sulfur or a mixture of 0.50 weight percent sulfur oil with other fuels not subject to a PM standard under § 60.43c and not using a post-combustion technology (except a wet scrubber) to reduce PM or $SO_2$ emissions is not subject to the PM limit in this section.

[72 FR 32759, June 13, 2007, as amended at 74 FR 5091, Jan. 28, 2009; 77 FR 9462, Feb. 16, 2012]

**§ 60.44c Compliance and performance test methods and procedures for sulfur dioxide.**

(a) Except as provided in paragraphs (g) and (h) of this section and § 60.8(b), performance tests required under § 60.8 shall be conducted following the procedures specified in paragraphs (b), (c), (d), (e), and (f) of this section, as applicable. Section 60.8(f) does not apply to this section. The 30-day notice required in § 60.8(d) applies only to the initial performance test unless otherwise specified by the Administrator.

(b) The initial performance test required under § 60.8 shall be conducted over 30 consecutive operating days of the steam generating unit. Compliance with the percent reduction requirements and $SO_2$ emission limits under § 60.42c shall be determined using a 30-day average. The first operating day included in the initial performance test shall be scheduled within 30 days after achieving the maximum production rate at which the affect facility will be operated, but not later than 180 days after the initial startup of the facility. The steam generating unit load during the 30-day period does not have to be the maximum design heat input capacity, but must be representative of future operating conditions.

(c) After the initial performance test required under paragraph (b) of this section and § 60.8, compliance with the percent reduction requirements and $SO_2$ emission limits under § 60.42c is based on the average percent reduction and the average $SO_2$ emission rates for 30 consecutive steam generating unit operating days. A separate performance test is completed at the end of each steam generating unit operating day, and a new 30-day average percent reduction and $SO_2$ emission rate are calculated to show compliance with the standard.

(d) If only coal, only oil, or a mixture of coal and oil is combusted in an affected facility, the procedures in Method 19 of appendix A of this part are used to determine the hourly $SO_2$ emission rate ($E_{ho}$ ) and the 30-day average $SO_2$ emission rate ($E_{ao}$ ). The hourly averages used to compute the 30-day averages are obtained from the CEMS. Method 19 of appendix A of this part shall be used to calculate $E_{ao}$ when using daily fuel sampling or Method 6B of appendix A of this part.

(e) If coal, oil, or coal and oil are combusted with other fuels:

(1) An adjusted $E_{ho}$ ($E_{ho}$ o) is used in Equation 19-19 of Method 19 of appendix A of this part to compute the adjusted $E_{ao}$ ($E_{ao}$ o). The $E_{ho}$ o is computed using the following formula:

$$E_{ho}o = \frac{E_{ho} - E_w(1 - X_1)}{X_1}$$

Where:

$E_{ho}$ o = Adjusted $E_{ho}$ , ng/J (lb/MMBtu);

$E_{ho}$ = Hourly $SO_2$ emission rate, ng/J (lb/MMBtu);

$E_w$ = $SO_2$ concentration in fuels other than coal and oil combusted in the affected facility, as determined by fuel sampling and analysis procedures in Method 9 of appendix A of this part, ng/J (lb/MMBtu). The value $E_w$ for each fuel lot is used for each hourly average during the time that the lot is being combusted. The owner or operator does not have to measure $E_w$ if the owner or operator elects to assume $E_w$ = 0.

$X_k$ = Fraction of the total heat input from fuel combustion derived from coal and oil, as determined by applicable procedures in Method 19 of appendix A of this part.

(2) The owner or operator of an affected facility that qualifies under the provisions of § 60.42c(c) or (d) (where percent reduction is not required) does not have to measure the parameters $E_w$ or $X_k$ if the owner or operator of the affected facility elects to measure emission rates of the coal or oil using the fuel sampling and analysis procedures under Method 19 of appendix A of this part.

(f) Affected facilities subject to the percent reduction requirements under § 60.42c(a) or (b) shall determine compliance with the $SO_2$ emission limits under § 60.42c pursuant to paragraphs (d) or (e) of this section, and shall determine compliance with the percent reduction requirements using the following procedures:

(1) If only coal is combusted, the percent of potential $SO_2$ emission rate is computed using the following formula:

$$\%P_s = 100\left(1 - \frac{\%R_g}{100}\right)\left(1 - \frac{\%R_f}{100}\right)$$

Where:

$\%P_s$ = Potential $SO_2$ emission rate, in percent;

$\%R_g$ = $SO_2$ removal efficiency of the control device as determined by Method 19 of appendix A of this part, in percent; and

$\%R_f$ = $SO_2$ removal efficiency of fuel pretreatment as determined by Method 19 of appendix A of this part, in percent.

(2) If coal, oil, or coal and oil are combusted with other fuels, the same procedures required in paragraph (f)(1) of this section are used, except as provided for in the following:

(i) To compute the $\%P_s$ , an adjusted $\%R_g$ ($\%R_g$ o) is computed from $E_{ao}$ o from paragraph (e)(1) of this section and an adjusted average $SO_2$ inlet rate ($E_{ai}$ o) using the following formula:

$$\%R_g o = 100\left(1 - \frac{E^{\circ}_{ao}}{E^{\circ}_{ai}}\right)$$

Where:

$\%R_g$ o = Adjusted $\%R_g$ , in percent;

$E_{ao}$ o = Adjusted $E_{ao}$ , ng/J (lb/MMBtu); and

$E_{ai}$ o = Adjusted average $SO_2$ inlet rate, ng/J (lb/MMBtu).

(ii) To compute $E_{ai}$ o, an adjusted hourly $SO_2$ inlet rate ($E_{hi}$ o) is used. The $E_{hi}$ o is computed using the following formula:

$$E_{hi}o = \frac{E_{hi} - E_w(1 - X_k)}{X_k}$$

Where:

$E_{hi}$ o = Adjusted $E_{hi}$ , ng/J (lb/MMBtu);

$E_{hi}$ = Hourly $SO_2$ inlet rate, ng/J (lb/MMBtu);

$E_w$ = $SO_2$ concentration in fuels other than coal and oil combusted in the affected facility, as determined by fuel sampling and analysis procedures in Method 19 of appendix A of this part, ng/J (lb/MMBtu). The value $E_w$ for each fuel lot is used for each hourly average during the time that the lot is being combusted. The owner or operator does not have to measure $E_w$ if the owner or operator elects to assume $E_w$ = 0; and

$X_k$ = Fraction of the total heat input from fuel combustion derived from coal and oil, as determined by applicable procedures in Method 19 of appendix A of this part.

(g) For oil-fired affected facilities where the owner or operator seeks to demonstrate compliance with the fuel oil sulfur limits under § 60.42c based on shipment fuel sampling, the initial performance test shall consist of sampling and analyzing the oil in the initial tank of oil to be fired in the steam generating unit to demonstrate that the oil contains 0.5 weight percent sulfur or less. Thereafter, the owner or operator of the affected facility shall sample the oil in the fuel tank after each new shipment of oil is received, as described under § 60.46c(d)(2).

(h) For affected facilities subject to § 60.42c(h)(1), (2), or (3) where the owner or operator seeks to demonstrate compliance with the $SO_2$ standards based on fuel supplier certification, the performance test shall consist of the certification from the fuel supplier, as described in § 60.48c(f), as applicable.

(i) The owner or operator of an affected facility seeking to demonstrate compliance with the $SO_2$ standards under § 60.42c(c)(2) shall demonstrate the maximum design heat input capacity of the steam generating unit by operating the steam generating unit at this capacity for 24 hours. This demonstration shall be made during the initial performance test, and a subsequent demonstration may be requested at any other time. If the demonstrated 24-hour average firing rate for the affected facility is less than the maximum design heat input capacity stated by the manufacturer of the affected facility, the demonstrated 24-hour average firing rate shall be used to determine the annual capacity factor for the affected facility; otherwise, the maximum design heat input capacity provided by the manufacturer shall be used.

(j) The owner or operator of an affected facility shall use all valid $SO_2$ emissions data in calculating $\%P_s$ and $E_{ho}$ under paragraphs (d), (e), or (f) of this section, as applicable, whether or not the minimum emissions data requirements under § 60.46c(f) are achieved. All valid emissions data, including valid data collected during periods of startup, shutdown, and malfunction, shall be used in calculating $\%P_s$ or $E_{ho}$ pursuant to paragraphs (d), (e), or (f) of this section, as applicable.

[72 FR 32759, June 13, 2007, as amended at 74 FR 5091, Jan. 28, 2009]

**§ 60.45c Compliance and performance test methods and procedures for particulate matter.**

(a) The owner or operator of an affected facility subject to the PM and/or opacity standards under § 60.43c shall conduct an initial performance test as required under § 60.8, and shall conduct subsequent performance tests as requested by the Administrator, to determine compliance with the standards using the following procedures and reference methods, except as specified in paragraph (c) of this section.

(1) Method 1 of appendix A of this part shall be used to select the sampling site and the number of traverse sampling points.

(2) Method 3A or 3B of appendix A-2 of this part shall be used for gas analysis when applying Method 5 or 5B of appendix A-3 of this part or 17 of appendix A-6 of this part.

(3) Method 5, 5B, or 17 of appendix A of this part shall be used to measure the concentration of PM as follows:

(i) Method 5 of appendix A of this part may be used only at affected facilities without wet scrubber systems.

(ii) Method 17 of appendix A of this part may be used at affected facilities with or without wet scrubber systems provided the stack gas temperature does not exceed a temperature of 160 °C (320 °F). The procedures of Sections 8.1 and 11.1 of Method 5B of appendix A of this part may be used in Method 17 of appendix A of this part only if Method 17 of appendix A of this part is used in conjunction with a wet scrubber system. Method 17 of appendix A of this part shall not be used in conjunction with a wet scrubber system if the effluent is saturated or laden with water droplets.

(iii) Method 5B of appendix A of this part may be used in conjunction with a wet scrubber system.

(4) The sampling time for each run shall be at least 120 minutes and the minimum sampling volume shall be 1.7 dry standard cubic meters (dscm) [60 dry standard cubic feet (dscf)] except that smaller sampling times or volumes may be approved by the Administrator when necessitated by process variables or other factors.

(5) For Method 5 or 5B of appendix A of this part, the temperature of the sample gas in the probe and filter holder shall be monitored and maintained at 160 ±14 °C (320±25 °F).

(6) For determination of PM emissions, an oxygen ($O_2$ ) or carbon dioxide ($CO_2$ ) measurement shall be obtained simultaneously with each run of Method 5, 5B, or 17 of appendix A of this part by traversing the duct at the same sampling location.

(7) For each run using Method 5, 5B, or 17 of appendix A of this part, the emission rates expressed in ng/J (lb/MMBtu) heat input shall be determined using:

(i) The $O_2$ or $CO_2$ measurements and PM measurements obtained under this section, (ii) The dry basis F factor, and

(iii) The dry basis emission rate calculation procedure contained in Method 19 of appendix A of this part.

(8) Method 9 of appendix A-4 of this part shall be used for determining the opacity of stack emissions.

(b) The owner or operator of an affected facility seeking to demonstrate compliance with the PM standards under § 60.43c(b)(2) shall demonstrate the maximum design heat input capacity of the steam generating unit by operating the steam generating unit at this capacity for 24 hours. This demonstration shall be made during the initial performance test, and a subsequent demonstration may be requested at any other time. If the demonstrated 24-hour average firing rate for the affected facility is less than the maximum design heat input capacity stated by the manufacturer of the affected facility, the demonstrated 24-hour average firing rate shall be used to determine the annual capacity factor for the affected facility; otherwise, the maximum design heat input capacity provided by the manufacturer shall be used.

(c) In place of PM testing with Method 5 or 5B of appendix A-3 of this part or Method 17 of appendix A-6 of this part, an owner or operator may elect to install, calibrate, maintain, and operate a CEMS for monitoring PM emissions discharged to the atmosphere and record the output of the system. The owner or operator of an affected facility who elects to continuously monitor PM emissions instead of conducting performance testing using Method 5 or 5B of appendix A-3 of this part or Method 17 of appendix A-6 of this part shall install, calibrate, maintain, and operate a CEMS and shall comply with the requirements specified in paragraphs (c)(1) through (c)(14) of this section.

(1) Notify the Administrator 1 month before starting use of the system.

(2) Notify the Administrator 1 month before stopping use of the system.

(3) The monitor shall be installed, evaluated, and operated in accordance with § 60.13 of subpart A of this part.

(4) The initial performance evaluation shall be completed no later than 180 days after the date of initial startup of the affected facility, as specified under § 60.8 of subpart A of this part or within 180 days of notification to the Administrator of use of CEMS if the owner or operator was previously determining compliance by Method 5, 5B, or 17 of appendix A of this part performance tests, whichever is later.

(5) The owner or operator of an affected facility shall conduct an initial performance test for PM emissions as required under § 60.8 of subpart A of this part. Compliance with the PM emission limit shall be determined by using the CEMS specified in paragraph (d) of this section to measure PM and calculating a 24-hour block arithmetic average emission concentration using EPA Reference Method 19 of appendix A of this part, section 4.1.

(6) Compliance with the PM emission limit shall be determined based on the 24-hour daily (block) average of the hourly arithmetic average emission concentrations using CEMS outlet data.

(7) At a minimum, valid CEMS hourly averages shall be obtained as specified in paragraph (c)(7)(i) of this section for 75 percent of the total operating hours per 30-day rolling average.

(i) At least two data points per hour shall be used to calculate each 1-hour arithmetic average.

(ii) [Reserved]

(8) The 1-hour arithmetic averages required under paragraph (c)(7) of this section shall be expressed in ng/J or lb/MMBtu heat input and shall be used to calculate the boiler operating day daily arithmetic average emission concentrations. The 1-hour arithmetic averages shall be calculated using the data points required under § 60.13(e)(2) of subpart A of this part.

(9) All valid CEMS data shall be used in calculating average emission concentrations even if the minimum CEMS data requirements of paragraph (c)(7) of this section are not met.

(10) The CEMS shall be operated according to Performance Specification 11 in appendix B of this part.

(11) During the correlation testing runs of the CEMS required by Performance Specification 11 in appendix B of this part, PM and $O_2$ (or $CO_2$ ) data shall be collected concurrently (or within a 30- to 60-minute period) by both the continuous emission monitors and performance tests conducted using the following test methods.

(i) For PM, Method 5 or 5B of appendix A-3 of this part or Method 17 of appendix A-6 of this part shall be used; and

(ii) For O2 (or $CO_2$ ), Method 3A or 3B of appendix A-2 of this part, as applicable shall be used.

(12) Quarterly accuracy determinations and daily calibration drift tests shall be performed in accordance with procedure 2 in appendix F of this part. Relative Response Audit's must be performed annually and Response Correlation Audits must be performed every 3 years.

(13) When PM emissions data are not obtained because of CEMS breakdowns, repairs, calibration checks, and zero and span adjustments, emissions data shall be obtained by using other monitoring systems as approved by the Administrator or EPA Reference Method 19 of appendix A of this part to provide, as necessary, valid emissions data for a minimum of 75 percent of total operating hours on a 30-day rolling average.

(14) As of January 1, 2012, and within 90 days after the date of completing each performance test, as defined in § 60.8, conducted to demonstrate compliance with this subpart, you must submit relative accuracy test audit ( *i.e.,* reference method) data and performance test ( *i.e.,* compliance test) data, except opacity data, electronically to EPA's Central Data Exchange (CDX) by using the Electronic Reporting Tool (ERT) (see *http://www.epa.gov/ttn/chief/ert/ert tool.html/* ) or other compatible electronic spreadsheet. Only data collected using test methods compatible with ERT are subject to this requirement to be submitted electronically into EPA's WebFIRE database.

(d) The owner or operator of an affected facility seeking to demonstrate compliance under § 60.43c(e)(4) shall follow the applicable procedures under § 60.48c(f). For residual oil-fired affected facilities, fuel supplier certifications are only allowed for facilities with heat input capacities between 2.9 and 8.7 MW (10 to 30 MMBtu/h).

[72 FR 32759, June 13, 2007, as amended at 74 FR 5091, Jan. 28, 2009; 76 FR 3523, Jan. 20, 2011; 77 FR 9463, Feb. 16, 2012]

**§ 60.46c Emission monitoring for sulfur dioxide.**

(a) Except as provided in paragraphs (d) and (e) of this section, the owner or operator of an affected facility subject to the $SO_2$ emission limits under § 60.42c shall install, calibrate, maintain, and operate a CEMS for measuring $SO_2$ concentrations and either $O_2$ or $CO_2$ concentrations at the outlet of the $SO_2$ control device (or the outlet of the steam generating unit if no $SO_2$ control device is used), and shall record the output of the system. The owner or operator of an affected facility subject to the percent reduction requirements under § 60.42c shall measure $SO_2$ concentrations and either $O_2$ or $CO_2$ concentrations at both the inlet and outlet of the $SO_2$ control device.

(b) The 1-hour average $SO_2$ emission rates measured by a CEMS shall be expressed in ng/J or lb/MMBtu heat input and shall be used to calculate the average emission rates under § 60.42c. Each 1-hour average $SO_2$ emission rate must be based on at least 30 minutes of operation, and shall be calculated using the data points required under § 60.13(h)(2). Hourly $SO_2$ emission rates are not calculated if the affected facility is operated less than 30 minutes in a 1-hour period and are not counted toward determination of a steam generating unit operating day.

(c) The procedures under § 60.13 shall be followed for installation, evaluation, and operation of the CEMS.

(1) All CEMS shall be operated in accordance with the applicable procedures under Performance Specifications 1, 2, and 3 of appendix B of this part.

(2) Quarterly accuracy determinations and daily calibration drift tests shall be performed in accordance with Procedure 1 of appendix F of this part.

(3) For affected facilities subject to the percent reduction requirements under § 60.42c, the span value of the $SO_2$ CEMS at the inlet to the $SO_2$ control device shall be 125 percent of the maximum estimated hourly potential $SO_2$ emission rate of the fuel combusted, and the span value of the $SO_2$ CEMS at the outlet from the $SO_2$ control device shall be 50 percent of the maximum estimated hourly potential $SO_2$ emission rate of the fuel combusted.

(4) For affected facilities that are not subject to the percent reduction requirements of § 60.42c, the span value of the $SO_2$ CEMS at the outlet from the $SO_2$ control device (or outlet of the steam generating unit if no $SO_2$ control device is used) shall be 125 percent of the maximum estimated hourly potential $SO_2$ emission rate of the fuel combusted.

(d) As an alternative to operating a CEMS at the inlet to the $SO_2$ control device (or outlet of the steam generating unit if no $SO_2$ control device is used) as required under paragraph (a) of this section, an owner or operator may elect to determine the average $SO_2$ emission rate by sampling the fuel prior to combustion. As an alternative to operating a CEMS at the outlet from the $SO_2$ control device (or outlet of the steam generating unit if no $SO_2$ control device is used) as required under paragraph (a) of this section, an owner or operator may elect to determine the average $SO_2$ emission rate by using Method 6B of appendix A of this part. Fuel sampling shall be conducted pursuant to either paragraph (d)(1) or (d)(2) of this section. Method 6B of appendix A of this part shall be conducted pursuant to paragraph (d)(3) of this section.

(1) For affected facilities combusting coal or oil, coal or oil samples shall be collected daily in an as-fired condition at the inlet to the steam generating unit and analyzed for sulfur content and heat content according the Method 19 of appendix A of this part. Method 19 of appendix A of this part provides procedures for converting these measurements into the format to be used in calculating the average $SO_2$ input rate.

(2) As an alternative fuel sampling procedure for affected facilities combusting oil, oil samples may be collected from the fuel tank for each steam generating unit immediately after the fuel tank is filled and before any oil is combusted. The owner or operator of the affected facility shall analyze the oil sample to determine the sulfur content of the oil. If a partially empty fuel tank is refilled, a new sample and analysis of the fuel in the tank would be required upon filling. Results of the fuel analysis taken after each new shipment of oil is received shall be used as the daily value when

calculating the 30-day rolling average until the next shipment is received. If the fuel analysis shows that the sulfur content in the fuel tank is greater than 0.5 weight percent sulfur, the owner or operator shall ensure that the sulfur content of subsequent oil shipments is low enough to cause the 30-day rolling average sulfur content to be 0.5 weight percent sulfur or less.

(3) Method 6B of appendix A of this part may be used in lieu of CEMS to measure $SO_2$ at the inlet or outlet of the $SO_2$ control system. An initial stratification test is required to verify the adequacy of the Method 6B of appendix A of this part sampling location. The stratification test shall consist of three paired runs of a suitable $SO_2$ and $CO_2$ measurement train operated at the candidate location and a second similar train operated according to the procedures in § 3.2 and the applicable procedures in section 7 of Performance Specification 2 of appendix B of this part. Method 6B of appendix A of this part, Method 6A of appendix A of this part, or a combination of Methods 6 and 3 of appendix A of this part or Methods 6C and 3A of appendix A of this part are suitable measurement techniques. If Method 6B of appendix A of this part is used for the second train, sampling time and timer operation may be adjusted for the stratification test as long as an adequate sample volume is collected; however, both sampling trains are to be operated similarly. For the location to be adequate for Method 6B of appendix A of this part 24-hour tests, the mean of the absolute difference between the three paired runs must be less than 10 percent (0.10).

(e) The monitoring requirements of paragraphs (a) and (d) of this section shall not apply to affected facilities subject to § 60.42c(h) (1), (2), or (3) where the owner or operator of the affected facility seeks to demonstrate compliance with the $SO_2$ standards based on fuel supplier certification, as described under § 60.48c(f), as applicable.

(f) The owner or operator of an affected facility operating a CEMS pursuant to paragraph (a) of this section, or conducting as-fired fuel sampling pursuant to paragraph (d)(1) of this section, shall obtain emission data for at least 75 percent of the operating hours in at least 22 out of 30 successive steam generating unit operating days. If this minimum data requirement is not met with a single monitoring system, the owner or operator of the affected facility shall supplement the emission data with data collected with other monitoring systems as approved by the Administrator.

**§ 60.47c Emission monitoring for particulate matter.**

(a) Except as provided in paragraphs (c), (d), (e), and (f) of this section, the owner or operator of an affected facility combusting coal, oil, or wood that is subject to the opacity standards under § 60.43c shall install, calibrate, maintain, and operate a continuous opacity monitoring system (COMS) for measuring the opacity of the emissions discharged to the atmosphere and record the output of the system. The owner or operator of an affected facility subject to an opacity standard in § 60.43c(c) that is not required to use a COMS due to paragraphs (c), (d), (e), or (f) of this section that elects not to use a COMS shall conduct a performance test using Method 9 of appendix A-4 of this part and the procedures in § 60.11 to demonstrate compliance with the applicable limit in § 60.43c by April 29, 2011, within 45 days of stopping use of an existing COMS, or within 180 days after initial startup of the facility, whichever is later, and shall comply with either paragraphs (a)(1), (a)(2), or (a)(3) of this section. The observation period for Method 9 of appendix A-4 of this part performance tests may be reduced from 3 hours to 60 minutes if all 6-minute averages are less than 10 percent and all individual 15-second observations are less than or equal to 20 percent during the initial 60 minutes of observation.

(1) Except as provided in paragraph (a)(2) and (a)(3) of this section, the owner or operator shall conduct subsequent Method 9 of appendix A-4 of this part performance tests using the procedures in paragraph (a) of this section according to the applicable schedule in paragraphs (a)(1)(i) through (a)(1)(iv) of this section, as determined by the most recent Method 9 of appendix A-4 of this part performance test results.

(i) If no visible emissions are observed, a subsequent Method 9 of appendix A-4 of this part performance test must be completed within 12 calendar months from the date that the most recent performance test was conducted or within 45 days of the next day that fuel with an opacity standard is combusted, whichever is later;

(ii) If visible emissions are observed but the maximum 6-minute average opacity is less than or equal to 5 percent, a subsequent Method 9 of appendix A-4 of this part performance test must be completed within 6 calendar months from the date that the most recent performance test was conducted or within 45 days of the next day that fuel with an opacity standard is combusted, whichever is later;

(iii) If the maximum 6-minute average opacity is greater than 5 percent but less than or equal to 10 percent, a subsequent Method 9 of appendix A-4 of this part performance test must be completed within 3 calendar months from

the date that the most recent performance test was conducted or within 45 days of the next day that fuel with an opacity standard is combusted, whichever is later; or

(iv) If the maximum 6-minute average opacity is greater than 10 percent, a subsequent Method 9 of appendix A-4 of this part performance test must be completed within 45 calendar days from the date that the most recent performance test was conducted.

(2) If the maximum 6-minute opacity is less than 10 percent during the most recent Method 9 of appendix A-4 of this part performance test, the owner or operator may, as an alternative to performing subsequent Method 9 of appendix A-4 of this part performance tests, elect to perform subsequent monitoring using Method 22 of appendix A-7 of this part according to the procedures specified in paragraphs (a)(2)(i) and (ii) of this section.

(i) The owner or operator shall conduct 10 minute observations (during normal operation) each operating day the affected facility fires fuel for which an opacity standard is applicable using Method 22 of appendix A-7 of this part and demonstrate that the sum of the occurrences of any visible emissions is not in excess of 5 percent of the observation period ( *i.e.* , 30 seconds per 10 minute period). If the sum of the occurrence of any visible emissions is greater than 30 seconds during the initial 10 minute observation, immediately conduct a 30 minute observation. If the sum of the occurrence of visible emissions is greater than 5 percent of the observation period ( *i.e.,* 90 seconds per 30 minute period), the owner or operator shall either document and adjust the operation of the facility and demonstrate within 24 hours that the sum of the occurrence of visible emissions is equal to or less than 5 percent during a 30 minute observation ( *i.e.,* 90 seconds) or conduct a new Method 9 of appendix A-4 of this part performance test using the procedures in paragraph (a) of this section within 45 calendar days according to the requirements in § 60.45c(a)(8).

(ii) If no visible emissions are observed for 10 operating days during which an opacity standard is applicable, observations can be reduced to once every 7 operating days during which an opacity standard is applicable. If any visible emissions are observed, daily observations shall be resumed.

(3) If the maximum 6-minute opacity is less than 10 percent during the most recent Method 9 of appendix A-4 of this part performance test, the owner or operator may, as an alternative to performing subsequent Method 9 of appendix A-4 performance tests, elect to perform subsequent monitoring using a digital opacity compliance system according to a site-specific monitoring plan approved by the Administrator. The observations shall be similar, but not necessarily identical, to the requirements in paragraph (a)(2) of this section. For reference purposes in preparing the monitoring plan, see OAQPS “Determination of Visible Emission Opacity from Stationary Sources Using Computer-Based Photographic Analysis Systems.” This document is available from the U.S. Environmental Protection Agency (U.S. EPA); Office of Air Quality and Planning Standards; Sector Policies and Programs Division; Measurement Policy Group (D243-02), Research Triangle Park, NC 27711. This document is also available on the Technology Transfer Network (TTN) under Emission Measurement Center Preliminary Methods.

(b) All COMS shall be operated in accordance with the applicable procedures under Performance Specification 1 of appendix B of this part. The span value of the opacity COMS shall be between 60 and 80 percent.

(c) Owners and operators of an affected facilities that burn only distillate oil that contains no more than 0.5 weight percent sulfur and/or liquid or gaseous fuels with potential sulfur dioxide emission rates of 26 ng/J (0.060 lb/MMBtu) heat input or less and that do not use a post-combustion technology to reduce SO2 or PM emissions and that are subject to an opacity standard in § 60.43c(c) are not required to operate a COMS if they follow the applicable procedures in § 60.48c(f).

(d) Owners or operators complying with the PM emission limit by using a PM CEMS must calibrate, maintain, operate, and record the output of the system for PM emissions discharged to the atmosphere as specified in § 60.45c(c). The CEMS specified in paragraph § 60.45c(c) shall be operated and data recorded during all periods of operation of the affected facility except for CEMS breakdowns and repairs. Data is recorded during calibration checks, and zero and span adjustments.

(e) Owners and operators of an affected facility that is subject to an opacity standard in § 60.43c(c) and that does not use post-combustion technology (except a wet scrubber) for reducing PM, $SO_2$ , or carbon monoxide (CO) emissions, burns only gaseous fuels or fuel oils that contain less than or equal to 0.5 weight percent sulfur, and is operated such that emissions of CO discharged to the atmosphere from the affected facility are maintained at levels less than or equal to 0.15 lb/MMBtu on a boiler operating day average basis is not required to operate a COMS.

Owners and operators of affected facilities electing to comply with this paragraph must demonstrate compliance according to the procedures specified in paragraphs (e)(1) through (4) of this section; or

(1) You must monitor CO emissions using a CEMS according to the procedures specified in paragraphs (e)(1)(i) through (iv) of this section.

(i) The CO CEMS must be installed, certified, maintained, and operated according to the provisions in § 60.58b(i)(3) of subpart Eb of this part.

(ii) Each 1-hour CO emissions average is calculated using the data points generated by the CO CEMS expressed in parts per million by volume corrected to 3 percent oxygen (dry basis).

(iii) At a minimum, valid 1-hour CO emissions averages must be obtained for at least 90 percent of the operating hours on a 30-day rolling average basis. The 1-hour averages are calculated using the data points required in § 60.13(h)(2).

(iv) Quarterly accuracy determinations and daily calibration drift tests for the CO CEMS must be performed in accordance with procedure 1 in appendix F of this part.

(2) You must calculate the 1-hour average CO emissions levels for each steam generating unit operating day by multiplying the average hourly CO output concentration measured by the CO CEMS times the corresponding average hourly flue gas flow rate and divided by the corresponding average hourly heat input to the affected source. The 24-hour average CO emission level is determined by calculating the arithmetic average of the hourly CO emission levels computed for each steam generating unit operating day.

(3) You must evaluate the preceding 24-hour average CO emission level each steam generating unit operating day excluding periods of affected source startup, shutdown, or malfunction. If the 24-hour average CO emission level is greater than 0.15 lb/MMBtu, you must initiate investigation of the relevant equipment and control systems within 24 hours of the first discovery of the high emission incident and, take the appropriate corrective action as soon as practicable to adjust control settings or repair equipment to reduce the 24-hour average CO emission level to 0.15 lb/MMBtu or less.

(4) You must record the CO measurements and calculations performed according to paragraph (e) of this section and any corrective actions taken. The record of corrective action taken must include the date and time during which the 24-hour average CO emission level was greater than 0.15 lb/MMBtu, and the date, time, and description of the corrective action.

(f) An owner or operator of an affected facility that is subject to an opacity standard in § 60.43c(c) is not required to operate a COMS provided that the affected facility meets the conditions in either paragraphs (f)(1), (2), or (3) of this section.

(1) The affected facility uses a fabric filter (baghouse) as the primary PM control device and, the owner or operator operates a bag leak detection system to monitor the performance of the fabric filter according to the requirements in section § 60.48Da of this part.

(2) The affected facility uses an ESP as the primary PM control device, and the owner or operator uses an ESP predictive model to monitor the performance of the ESP developed in accordance and operated according to the requirements in section § 60.48Da of this part.

(3) The affected facility burns only gaseous fuels and/or fuel oils that contain no greater than 0.5 weight percent sulfur, and the owner or operator operates the unit according to a written site-specific monitoring plan approved by the permitting authority. This monitoring plan must include procedures and criteria for establishing and monitoring specific parameters for the affected facility indicative of compliance with the opacity standard. For testing performed as part of this site-specific monitoring plan, the permitting authority may require as an alternative to the notification and reporting requirements specified in §§ 60.8 and 60.11 that the owner or operator submit any deviations with the excess emissions report required under § 60.48c(c).

[72 FR 32759, June 13, 2007, as amended at 74 FR 5091, Jan. 28, 2009; 76 FR 3523, Jan. 20, 2011; 77 FR 9463, Feb. 16, 2012]

**§ 60.48c Reporting and recordkeeping requirements.**

(a) The owner or operator of each affected facility shall submit notification of the date of construction or reconstruction and actual startup, as provided by § 60.7 of this part. This notification shall include:

(1) The design heat input capacity of the affected facility and identification of fuels to be combusted in the affected facility.

(2) If applicable, a copy of any federally enforceable requirement that limits the annual capacity factor for any fuel or mixture of fuels under § 60.42c, or § 60.43c.

(3) The annual capacity factor at which the owner or operator anticipates operating the affected facility based on all fuels fired and based on each individual fuel fired.

(4) Notification if an emerging technology will be used for controlling $SO_2$ emissions. The Administrator will examine the description of the control device and will determine whether the technology qualifies as an emerging technology. In making this determination, the Administrator may require the owner or operator of the affected facility to submit additional information concerning the control device. The affected facility is subject to the provisions of § 60.42c(a) or (b)(1), unless and until this determination is made by the Administrator.

(b) The owner or operator of each affected facility subject to the $SO_2$ emission limits of § 60.42c, or the PM or opacity limits of § 60.43c, shall submit to the Administrator the performance test data from the initial and any subsequent performance tests and, if applicable, the performance evaluation of the CEMS and/or COMS using the applicable performance specifications in appendix B of this part.

(c) In addition to the applicable requirements in § 60.7, the owner or operator of an affected facility subject to the opacity limits in § 60.43c(c) shall submit excess emission reports for any excess emissions from the affected facility that occur during the reporting period and maintain records according to the requirements specified in paragraphs (c)(1) through (3) of this section, as applicable to the visible emissions monitoring method used.

(1) For each performance test conducted using Method 9 of appendix A-4 of this part, the owner or operator shall keep the records including the information specified in paragraphs (c)(1)(i) through (iii) of this section.

(i) Dates and time intervals of all opacity observation periods;

(ii) Name, affiliation, and copy of current visible emission reading certification for each visible emission observer participating in the performance test; and

(iii) Copies of all visible emission observer opacity field data sheets;

(2) For each performance test conducted using Method 22 of appendix A-4 of this part, the owner or operator shall keep the records including the information specified in paragraphs (c)(2)(i) through (iv) of this section.

(i) Dates and time intervals of all visible emissions observation periods;

(ii) Name and affiliation for each visible emission observer participating in the performance test;

(iii) Copies of all visible emission observer opacity field data sheets; and

(iv) Documentation of any adjustments made and the time the adjustments were completed to the affected facility operation by the owner or operator to demonstrate compliance with the applicable monitoring requirements.

(3) For each digital opacity compliance system, the owner or operator shall maintain records and submit reports according to the requirements specified in the site-specific monitoring plan approved by the Administrator

(d) The owner or operator of each affected facility subject to the $SO_2$ emission limits, fuel oil sulfur limits, or percent reduction requirements under § 60.42c shall submit reports to the Administrator.

(e) The owner or operator of each affected facility subject to the $SO_2$ emission limits, fuel oil sulfur limits, or percent reduction requirements under § 60.42c shall keep records and submit reports as required under paragraph (d) of this section, including the following information, as applicable.

(1) Calendar dates covered in the reporting period.

(2) Each 30-day average $SO_2$ emission rate (ng/J or lb/MMBtu), or 30-day average sulfur content (weight percent), calculated during the reporting period, ending with the last 30-day period; reasons for any noncompliance with the emission standards; and a description of corrective actions taken.

(3) Each 30-day average percent of potential $SO_2$ emission rate calculated during the reporting period, ending with the last 30-day period; reasons for any noncompliance with the emission standards; and a description of the corrective actions taken.

(4) Identification of any steam generating unit operating days for which $SO_2$ or diluent ($O_2$ or $CO_2$ ) data have not been obtained by an approved method for at least 75 percent of the operating hours; justification for not obtaining sufficient data; and a description of corrective actions taken.

(5) Identification of any times when emissions data have been excluded from the calculation of average emission rates; justification for excluding data; and a description of corrective actions taken if data have been excluded for periods other than those during which coal or oil were not combusted in the steam generating unit.

(6) Identification of the F factor used in calculations, method of determination, and type of fuel combusted.

(7) Identification of whether averages have been obtained based on CEMS rather than manual sampling methods.

(8) If a CEMS is used, identification of any times when the pollutant concentration exceeded the full span of the CEMS.

(9) If a CEMS is used, description of any modifications to the CEMS that could affect the ability of the CEMS to comply with Performance Specifications 2 or 3 of appendix B of this part.

(10) If a CEMS is used, results of daily CEMS drift tests and quarterly accuracy assessments as required under appendix F, Procedure 1 of this part.

(11) If fuel supplier certification is used to demonstrate compliance, records of fuel supplier certification as described under paragraph (f)(1), (2), (3), or (4) of this section, as applicable. In addition to records of fuel supplier certifications, the report shall include a certified statement signed by the owner or operator of the affected facility that the records of fuel supplier certifications submitted represent all of the fuel combusted during the reporting period.

(f) Fuel supplier certification shall include the following information:

(1) For distillate oil:

(i) The name of the oil supplier;

(ii) A statement from the oil supplier that the oil complies with the specifications under the definition of distillate oil in § 60.41c; and

(iii) The sulfur content or maximum sulfur content of the oil.

(2) For residual oil:

(i) The name of the oil supplier;

(ii) The location of the oil when the sample was drawn for analysis to determine the sulfur content of the oil, specifically including whether the oil was sampled as delivered to the affected facility, or whether the sample was drawn from oil in storage at the oil supplier's or oil refiner's facility, or other location;

(iii) The sulfur content of the oil from which the shipment came (or of the shipment itself); and

(iv) The method used to determine the sulfur content of the oil.

(3) For coal:

(i) The name of the coal supplier;

(ii) The location of the coal when the sample was collected for analysis to determine the properties of the coal, specifically including whether the coal was sampled as delivered to the affected facility or whether the sample was collected from coal in storage at the mine, at a coal preparation plant, at a coal supplier's facility, or at another location. The certification shall include the name of the coal mine (and coal seam), coal storage facility, or coal preparation plant (where the sample was collected);

(iii) The results of the analysis of the coal from which the shipment came (or of the shipment itself) including the sulfur content, moisture content, ash content, and heat content; and

(iv) The methods used to determine the properties of the coal.

(4) For other fuels:

(i) The name of the supplier of the fuel;

(ii) The potential sulfur emissions rate or maximum potential sulfur emissions rate of the fuel in ng/J heat input; and

(iii) The method used to determine the potential sulfur emissions rate of the fuel.

(g)(1) Except as provided under paragraphs (g)(2) and (g)(3) of this section, the owner or operator of each affected facility shall record and maintain records of the amount of each fuel combusted during each operating day.

(2) As an alternative to meeting the requirements of paragraph (g)(1) of this section, the owner or operator of an affected facility that combusts only natural gas, wood, fuels using fuel certification in § 60.48c(f) to demonstrate compliance with the $SO_2$ standard, fuels not subject to an emissions standard (excluding opacity), or a mixture of these fuels may elect to record and maintain records of the amount of each fuel combusted during each calendar month.

(3) As an alternative to meeting the requirements of paragraph (g)(1) of this section, the owner or operator of an affected facility or multiple affected facilities located on a contiguous property unit where the only fuels combusted in any steam generating unit (including steam generating units not subject to this subpart) at that property are natural gas, wood, distillate oil meeting the most current requirements in § 60.42C to use fuel certification to demonstrate compliance with the $SO_2$ standard, and/or fuels, excluding coal and residual oil, not subject to an emissions standard (excluding opacity) may elect to record and maintain records of the total amount of each steam generating unit fuel delivered to that property during each calendar month.

(h) The owner or operator of each affected facility subject to a federally enforceable requirement limiting the annual capacity factor for any fuel or mixture of fuels under § 60.42c or § 60.43c shall calculate the annual capacity factor individually for each fuel combusted. The annual capacity factor is determined on a 12-month rolling average basis with a new annual capacity factor calculated at the end of the calendar month.

(i) All records required under this section shall be maintained by the owner or operator of the affected facility for a period of two years following the date of such record.

(j) The reporting period for the reports required under this subpart is each six-month period. All reports shall be submitted to the Administrator and shall be postmarked by the 30th day following the end of the reporting period.

[72 FR 32759, June 13, 2007, as amended at 74 FR 5091, Jan. 28, 2009]

**Attachment H**
**To Part 70 Operating Permit Renewal No. T129-25424-00003**

[Downloaded from the eCFR on May 20, 2013]

**Electronic Code of Federal Regulations**

**Title 40: Protection of Environment**

**40 CFR 60, Subpart J—Standards of Performance for Petroleum Refineries**

**§ 60.100 Applicability, designation of affected facility, and reconstruction.**

(a) The provisions of this subpart are applicable to the following affected facilities in petroleum refineries: fluid catalytic cracking unit catalyst regenerators, fuel gas combustion devices, and all Claus sulfur recovery plants except Claus plants with a design capacity for sulfur feed of 20 long tons per day (LTD) or less. The Claus sulfur recovery plant need not be physically located within the boundaries of a petroleum refinery to be an affected facility, provided it processes gases produced within a petroleum refinery.

(b) Any fluid catalytic cracking unit catalyst regenerator or fuel gas combustion device under paragraph (a) of this section other than a flare which commences construction, reconstruction or modification after June 11, 1973, and on or before May 14, 2007, or any fuel gas combustion device under paragraph (a) of this section that is also a flare which commences construction, reconstruction or modification after June 11, 1973, and on or before June 24, 2008, or any Claus sulfur recovery plant under paragraph (a) of this section which commences construction, reconstruction or modification after October 4, 1976, and on or before May 14, 2007, is subject to the requirements of this subpart except as provided under paragraphs (c) through (e) of this section.

(c) Any fluid catalytic cracking unit catalyst regenerator under paragraph (b) of this section which commences construction, reconstruction, or modification on or before January 17, 1984, is exempted from § 60.104(b).

(d) Any fluid catalytic cracking unit in which a contact material reacts with petroleum derivatives to improve feedstock quality and in which the contact material is regenerated by burning off coke and/or other deposits and that commences construction, reconstruction, or modification on or before January 17, 1984, is exempt from this subpart.

(e) Owners or operators may choose to comply with the applicable provisions of subpart Ja of this part to satisfy the requirements of this subpart for an affected facility.

(f) For purposes of this subpart, under § 60.15, the “fixed capital cost of the new components” includes the fixed capital cost of all depreciable components which are or will be replaced pursuant to all continuous programs of component replacement which are commenced within any 2-year period following January 17, 1984. For purposes of this paragraph, “commenced” means that an owner or operator has undertaken a continuous program of component replacement or that an owner or operator has entered into a contractual obligation to undertake and complete, within a reasonable time, a continuous program of component replacement.

[43 FR 10868, Mar. 15, 1978, as amended at 44 FR 61543, Oct. 25, 1979; 54 FR 34026, Aug. 17, 1989; 73 FR 35865, June 24, 2008; 77 FR 56463, Sep. 12, 2012]

**§ 60.101 Definitions.**

As used in this subpart, all terms not defined herein shall have the meaning given them in the Act and in subpart A.

(a) *Petroleum refinery* means any facility engaged in producing gasoline, kerosene, distillate fuel oils, residual fuel oils, lubricants, or other products through distillation of petroleum or through redistillation, cracking or reforming of unfinished petroleum derivatives.

(b) *Petroleum* means the crude oil removed from the earth and the oils derived from tar sands, shale, and coal.

(c) *Process gas* means any gas generated by a petroleum refinery process unit, except fuel gas and process upset gas as defined in this section.

(d) *Fuel gas* means any gas which is generated at a petroleum refinery and which is combusted. Fuel gas includes natural gas when the natural gas is combined and combusted in any proportion with a gas generated at a refinery. Fuel gas does not include gases generated by catalytic cracking unit catalyst regenerators and fluid coking burners. Fuel gas does not include vapors that are collected and combusted in a thermal oxidizer or flare installed to control emissions from wastewater treatment units or marine tank vessel loading operations.

(e) *Process upset gas* means any gas generated by a petroleum refinery process unit as a result of start-up, shut-down, upset or malfunction.

(f) *Refinery process unit* means any segment of the petroleum refinery in which a specific processing operation is conducted.

(g) *Fuel gas combustion device* means any equipment, such as process heaters, boilers and flares used to combust fuel gas, except facilities in which gases are combusted to produce sulfur or sulfuric acid.

(h) *Coke burn-off* means the coke removed from the surface of the fluid catalytic cracking unit catalyst by combustion in the catalyst regenerator. The rate of coke burn-off is calculated by the formula specified in § 60.106.

(i) *Claus sulfur recovery plant* means a process unit which recovers sulfur from hydrogen sulfide by a vapor-phase catalytic reaction of sulfur dioxide and hydrogen sulfide.

(j) *Oxidation control system* means an emission control system which reduces emissions from sulfur recovery plants by converting these emissions to sulfur dioxide.

(k) *Reduction control system* means an emission control system which reduces emissions from sulfur recovery plants by converting these emissions to hydrogen sulfide.

(l) *Reduced sulfur compounds* means hydrogen sulfide ($H_2S$), carbonyl sulfide (COS) and carbon disulfide ($CS_2$).

(m) *Fluid catalytic cracking unit* means a refinery process unit in which petroleum derivatives are continuously charged; hydrocarbon molecules in the presence of a catalyst suspended in a fluidized bed are fractured into smaller molecules, or react with a contact material suspended in a fluidized bed to improve feedstock quality for additional processing; and the catalyst or contact material is continuously regenerated by burning off coke and other deposits. The unit includes the riser, reactor, regenerator, air blowers, spent catalyst or contact material stripper, catalyst or contact material recovery equipment, and regenerator equipment for controlling air pollutant emissions and for heat recovery.

(n) *Fluid catalytic cracking unit catalyst regenerator* means one or more regenerators (multiple regenerators) which comprise that portion of the fluid catalytic cracking unit in which coke burn-off and catalyst or contact material regeneration occurs, and includes the regenerator combustion air blower(s).

(o) *Fresh feed* means any petroleum derivative feedstock stream charged directly into the riser or reactor of a fluid catalytic cracking unit except for petroleum derivatives recycled within the fluid catalytic cracking unit, fractionator, or gas recovery unit.

(p) *Contact material* means any substance formulated to remove metals, sulfur, nitrogen, or any other contaminant from petroleum derivatives.

(q) *Valid day* means a 24-hour period in which at least 18 valid hours of data are obtained. A “valid hour” is one in which at least 2 valid data points are obtained.

[39 FR 9315, Mar. 8, 1974, as amended at 43 FR 10868, Mar. 15, 1978; 44 FR 13481, Mar. 12, 1979; 45 FR 79453, Dec. 1, 1980; 54 FR 34027, Aug. 17, 1989; 73 FR 35865, June 24, 2008; 77 FR 56463, Sep. 12, 2012]

**§ 60.102 Standard for particulate matter.**

Each owner or operator of any fluid catalytic cracking unit catalyst regenerator that is subject to the requirements of this subpart shall comply with the emission limitations set forth in this section on and after the date on which the initial performance test, required by § 60.8, is completed, but not later than 60 days after achieving the maximum production rate at which the fluid catalytic cracking unit catalyst regenerator will be operated, or 180 days after initial startup, whichever comes first.

(a) No owner or operator subject to the provisions of this subpart shall discharge or cause the discharge into the atmosphere from any fluid catalytic cracking unit catalyst regenerator:

(1) Particulate matter in excess of 1.0 kg/Mg (2.0 lb/ton) of coke burn-off in the catalyst regenerator.

(2) Gases exhibiting greater than 30 percent opacity, except for one six-minute average opacity reading in any one hour period.

(b) Where the gases discharged by the fluid catalytic cracking unit catalyst regenerator pass through an incinerator or waste heat boiler in which auxiliary or supplemental liquid or solid fossil fuel is burned, particulate matter in excess of that permitted by paragraph (a)(1) of this section may be emitted to the atmosphere, except that the incremental rate of particulate matter emissions shall not exceed 43 grams per Gigajoule (g/GJ) (0.10 lb/million British thermal units (Btu)) of heat input attributable to such liquid or solid fossil fuel.

[39 FR 9315, Mar. 8, 1974, as amended at 42 FR 32427, June 24, 1977; 42 FR 39389, Aug. 4, 1977; 43 FR 10868, Feb. 15, 1978; 54 FR 34027, Aug. 17, 1989; 65 FR 61753, Oct. 17, 2000; 73 FR 35866, June 24, 2008]

**§ 60.103 Standard for carbon monoxide.**

Each owner or operator of any fluid catalytic cracking unit catalyst regenerator that is subject to the requirements of this subpart shall comply with the emission limitations set forth in this section on and after the date on which the initial performance test, required by § 60.8, is completed, but not later than 60 days after achieving the maximum production rate at which the fluid catalytic cracking unit catalyst regenerator will be operated, or 180 days after initial startup, whichever comes first.

(a) No owner or operator subject to the provisions of this subpart shall discharge or cause the discharge into the atmosphere from any fluid catalytic cracking unit catalyst regenerator any gases that contain carbon monoxide (CO) in excess of 500 ppm by volume (dry basis).

[54 FR 34027, Aug. 17, 1989, as amended at 55 FR 40175, Oct. 2, 1990]

**§ 60.104 Standards for sulfur oxides.**

Each owner or operator that is subject to the requirements of this subpart shall comply with the emission limitations set forth in this section on and after the date on which the initial performance test, required by § 60.8, is completed, but not later than 60 days after achieving the maximum production rate at which the affected facility will be operated, or 180 days after initial startup, whichever comes first.

(a) No owner or operator subject to the provisions of this subpart shall:

(1) Burn in any fuel gas combustion device any fuel gas that contains hydrogen sulfide ($H_2S$) in excess of 230 mg/dscm (0.10 gr/dscf). The combustion in a flare of process upset gases or fuel gas that is released to the flare as a result of relief valve leakage or other emergency malfunctions is exempt from this paragraph.

(2) Discharge or cause the discharge of any gases into the atmosphere from any Claus sulfur recovery plant containing in excess of:

(i) For an oxidation control system or a reduction control system followed by incineration, 250 ppm by volume (dry basis) of sulfur dioxide ($SO_2$ ) at zero percent excess air.

(ii) For a reduction control system not followed by incineration, 300 ppm by volume of reduced sulfur compounds and 10 ppm by volume of hydrogen sulfide ($H_2$ S), each calculated as ppm $SO_2$ by volume (dry basis) at zero percent excess air.

(b) Each owner or operator that is subject to the provisions of this subpart shall comply with one of the following conditions for each affected fluid catalytic cracking unit catalyst regenerator:

(1) With an add-on control device, reduce $SO_2$ emissions to the atmosphere by 90 percent or maintain $SO_2$ emissions to the atmosphere less than or equal to 50 ppm by volume (ppmv), whichever is less stringent; or

(2) Without the use of an add-on control device to reduce $SO_2$ emission, maintain sulfur oxides emissions calculated as $SO_2$ to the atmosphere less than or equal to 9.8 kg/Mg (20 lb/ton) coke burn-off; or

(3) Process in the fluid catalytic cracking unit fresh feed that has a total sulfur content no greater than 0.30 percent by weight.

(c) Compliance with paragraph (b)(1), (b)(2), or (b)(3) of this section is determined daily on a 7-day rolling average basis using the appropriate procedures outlined in § 60.106.

(d) A minimum of 22 valid days of data shall be obtained every 30 rolling successive calendar days when complying with paragraph (b)(1) of this section.

[43 FR 10869, Mar. 15, 1978, as amended at 54 FR 34027, Aug. 17, 1989; 55 FR 40175, Oct. 2, 1990; 65 FR 61754, Oct. 17, 2000; 73 FR 35866, June 24, 2008]

**§ 60.105 Monitoring of emissions and operations.**

(a) Continuous monitoring systems shall be installed, calibrated, maintained, and operated by the owner or operator subject to the provisions of this subpart as follows:

(1) For fluid catalytic cracking unit catalyst regenerators subject to § 60.102(a)(2), an instrument for continuously monitoring and recording the opacity of emissions into the atmosphere. The instrument shall be spanned at 60, 70, or 80 percent opacity.

(2) For fluid catalytic cracking unit catalyst regenerators subject to § 60.103(a), an instrument for continuously monitoring and recording the concentration by volume (dry basis) of CO emissions into the atmosphere, except as provided in paragraph (a)(2) (ii) of this section.

(i) The span value for this instrument is 1,000 ppm CO.

(ii) A CO continuous monitoring system need not be installed if the owner or operator demonstrates that the average CO emissions are less than 50 ppm (dry basis) and also files a written request for exemption to the Administrator and receives such an exemption. The demonstration shall consist of continuously monitoring CO emissions for 30 days using an instrument that shall meet the requirements of Performance Specification 4 of appendix B of this part. The span value shall be 100 ppm CO instead of 1,000 ppm, and the relative accuracy limit shall be 10 percent of the average CO emissions or 5 ppm CO, whichever is greater. For instruments that are identical to Method 10 and employ the sample conditioning system of Method 10A, the alternative relative accuracy test procedure in § 10.1 of Performance Specification 2 may be used in place of the relative accuracy test.

(3) For fuel gas combustion devices subject to § 60.104(a)(1), either an instrument for continuously monitoring and recording the concentration by volume (dry basis, zero percent excess air) of $SO_2$ emissions into the atmosphere or monitoring as provided in paragraph (a)(4) of this section). The monitor shall include an oxygen monitor for correcting the data for excess.

(i) The span values for this monitor are 50 ppm $SO_2$ and 25 percent oxygen ($O_2$ ).

(ii) The $SO_2$ monitoring level equivalent to the $H_2$ S standard under § 60.104(a)(1) shall be 20 ppm (dry basis, zero percent excess air).

(iii) The performance evaluations for this $SO_2$ monitor under § 60.13(c) shall use Performance Specification 2. Methods 6 or 6C and 3 or 3A shall be used for conducting the relative accuracy evaluations. Method 6 samples shall be taken at a flow rate of approximately 2 liters/min for at least 30 minutes. The relative accuracy limit shall be 20 percent or 4 ppm, whichever is greater, and the calibration drift limit shall be 5 percent of the established span value.

(iv) Fuel gas combustion devices having a common source of fuel gas may be monitored at only one location (i.e., after one of the combustion devices), if monitoring at this location accurately represents the $SO_2$ emissions into the atmosphere from each of the combustion devices.

(4) Instead of the $SO_2$ monitor in paragraph (a)(3) of this section for fuel gas combustion devices subject to § 60.104(a)(1), an instrument for continuously monitoring and recording the concentration (dry basis) of $H_2$ S in fuel gases before being burned in any fuel gas combustion device.

(i) The span value for this instrument is 425 mg/dscm $H_2$ S.

(ii) Fuel gas combustion devices having a common source of fuel gas may be monitored at only one location, if monitoring at this location accurately represents the concentration of $H_2$ S in the fuel gas being burned.

(iii) The performance evaluations for this $H_2$ S monitor under § 60.13(c) shall use Performance Specification 7. Method 11, 15, 15A, or 16 shall be used for conducting the relative accuracy evaluations.

(iv) The owner or operator of a fuel gas combustion device is not required to comply with paragraph (a)(3) or (4) of this section for fuel gas streams that are exempt under § 60.104(a)(1) and fuel gas streams combusted in a fuel gas combustion device that are inherently low in sulfur content. Fuel gas streams meeting one of the requirements in paragraphs (a)(4)(iv)(A) through (D) of this section will be considered inherently low in sulfur content. If the composition of a fuel gas stream changes such that it is no longer exempt under § 60.104(a)(1) or it no longer meets one of the requirements in paragraphs (a)(4)(iv)(A) through (D) of this section, the owner or operator must begin continuous monitoring under paragraph (a)(3) or (4) of this section within 15 days of the change.

(A) Pilot gas for heaters and flares.

(B) Fuel gas streams that meet a commercial-grade product specification for sulfur content of 30 ppmv or less. In the case of a liquefied petroleum gas (LPG) product specification in the pressurized liquid state, the gas phase sulfur content should be evaluated assuming complete vaporization of the LPG and sulfur containing-compounds at the product specification concentration.

(C) Fuel gas streams produced in process units that are intolerant to sulfur contamination, such as fuel gas streams produced in the hydrogen plant, the catalytic reforming unit, the isomerization unit, and HF alkylation process units.

(D) Other fuel gas streams that an owner or operator demonstrates are low-sulfur according to the procedures in paragraph (b) of this section.

(5) For Claus sulfur recovery plants with oxidation control systems or reduction control systems followed by incineration subject to § 60.104(a)(2)(i), an instrument for continuously monitoring and recording the concentration (dry basis, zero percent excess air) of $SO_2$ emissions into the atmosphere. The monitor shall include an oxygen monitor for correcting the data for excess air.

(i) The span values for this monitor are 500 ppm $SO_2$ and 25 percent $O_2$ .

(ii) The performance evaluations for this $SO_2$ monitor under § 60.13(c) shall use Performance Specification 2. Methods 6 or 6C and 3 or 3A shall be used for conducting the relative accuracy evaluations.

(6) For Claus sulfur recovery plants with reduction control systems not followed by incineration subject to § 60.104(a)(2)(ii), an instrument for continuously monitoring and recording the concentration of reduced sulfur and $O_2$ emissions into the atmosphere. The reduced sulfur emissions shall be calculated as $SO_2$ (dry basis, zero percent excess air).

(i) The span values for this monitor are 450 ppm reduced sulfur and 25 percent $O_2$ .

(ii) The performance evaluations for this reduced sulfur (and $O_2$ ) monitor under § 60.13(c) shall use Performance Specification 5 of appendix B of this part(and Performance Specification 3 of appendix B of this partfor the $O_2$ analyzer). Methods 15 or 15A and Method 3 shall be used for conducting the relative accuracy evaluations. If Method 3 yields $O_2$ concentrations below 0.25 percent during the performance specification test, the $O_2$ concentration may be assumed to be zero and the reduced sulfur CEMS need not include an $O_2$ monitor.

(7) In place of the reduced sulfur monitor under paragraph (a)(6) of this section, an instrument using an air or $O_2$ dilution and oxidation system to convert the reduced sulfur to $SO_2$ for continuously monitoring and recording the concentration (dry basis, zero percent excess air) of the resultant $SO_2$ . The monitor shall include an oxygen monitor for correcting the data for excess oxygen.

(i) The span values for this monitor are 375 ppm $SO_2$ and 25 percent $O_2$ .

(ii) For reporting purposes, the $SO_2$ exceedance level for this monitor is 250 ppm (dry basis, zero percent excess air).

(iii) The performance evaluations for this $SO_2$ (and $O_2$ ) monitor under § 60.13(c) shall use Performance Specification 5. Methods 15 or 15A and Method 3 shall be used for conducting the relative accuracy evaluations.

(8) An instrument for continuously monitoring and recording concentrations of $SO_2$ in the gases at both the inlet and outlet of the $SO_2$ control device from any fluid catalytic cracking unit catalyst regenerator for which the owner or operator seeks to comply specifically with the 90 percent reduction option under § 60.104(b)(1).

(i) The span value of the inlet monitor shall be set at 125 percent of the maximum estimated hourly potential $SO_2$ emission concentration entering the control device, and the span value of the outlet monitor shall be set at 50 percent of the maximum estimated hourly potential $SO_2$ emission concentration entering the control device.

(ii) The performance evaluations for these $SO_2$ monitors under § 60.13(c) shall use Performance Specification 2. Methods 6 or 6C and 3 or 3A shall be used for conducting the relative accuracy evaluations.

(9) An instrument for continuously monitoring and recording concentrations of $SO_2$ in the gases discharged into the atmosphere from any fluid catalytic cracking unit catalyst regenerator for which the owner or operator seeks to comply specifically with the 50 ppmv emission limit under § 60.104 (b)(1).

(i) The span value of the monitor shall be set at 50 percent of the maximum hourly potential $SO_2$ emission concentration of the control device.

(ii) The performance evaluations for this $SO_2$ monitor under § 60.13 (c) shall use Performance Specification 2. Methods 6 or 6C and 3 or 3A shall be used for conducting the relative accuracy evaluations.

(10) An instrument for continuously monitoring and recording concentrations of oxygen ($O_2$ ) in the gases at both the inlet and outlet of the sulfur dioxide control device (or the outlet only if specifically complying with the 50 ppmv standard) from any fluid catalytic cracking unit catalyst regenerator for which the owner or operator has elected to comply with § 60.104(b)(1). The span of this continuous monitoring system shall be set at 10 percent.

(11) The continuous monitoring systems under paragraphs (a)(8), (a)(9), and (a)(10) of this section are operated and data recorded during all periods of operation of the affected facility including periods of startup, shutdown, or malfunction, except for continuous monitoring system breakdowns, repairs, calibration checks, and zero and span adjustments.

(12) The owner or operator shall use the following procedures to evaluate the continuous monitoring systems under paragraphs (a)(8), (a)(9), and (a)(10) of this section.

(i) Method 3 or 3A and Method 6 or 6C for the relative accuracy evaluations under the § 60.13(e) performance evaluation.

(ii) appendix F, Procedure 1, including quarterly accuracy determinations and daily calibration drift tests.

(13) When seeking to comply with § 60.104(b)(1), when emission data are not obtained because of continuous monitoring system breakdowns, repairs, calibration checks and zero and span adjustments, emission data will be obtained by using one of the following methods to provide emission data for a minimum of 18 hours per day in at least 22 out of 30 rolling successive calendar days.

(i) The test methods as described in § 60.106(k);

(ii) A spare continuous monitoring system; or

(iii) Other monitoring systems as approved by the Administrator.

(b) An owner or operator may demonstrate that a fuel gas stream combusted in a fuel gas combustion device subject to § 60.104(a)(1) that is not specifically exempted in § 60.105(a)(4)(iv) is inherently low in sulfur. A fuel gas stream that is determined to be low-sulfur is exempt from the monitoring requirements in paragraphs (a)(3) and (4) of this section until there are changes in operating conditions or stream composition.

(1) The owner or operator shall submit to the Administrator a written application for an exemption from monitoring. The application must contain the following information:

(i) A description of the fuel gas stream/system to be considered, including submission of a portion of the appropriate piping diagrams indicating the boundaries of the fuel gas stream/system, and the affected fuel gas combustion device(s) to be considered;

(ii) A statement that there are no crossover or entry points for sour gas (high $H_2$ S content) to be introduced into the fuel gas stream/system (this should be shown in the piping diagrams);

(iii) An explanation of the conditions that ensure low amounts of sulfur in the fuel gas stream (i.e., control equipment or product specifications) at all times;

(iv) The supporting test results from sampling the requested fuel gas stream/system demonstrating that the sulfur content is less than 5 ppmv. Sampling data must include, at minimum, 2 weeks of daily monitoring (14 grab samples) for frequently operated fuel gas streams/systems; for infrequently operated fuel gas streams/systems, seven grab samples must be collected unless other additional information would support reduced sampling. The owner or operator shall use detector tubes ("length-of-stain tube" type measurement) following the "Gas Processors Association Standard 2377-86, Test for Hydrogen Sulfide and Carbon Dioxide in Natural Gas Using Length of Stain Tubes," 1986 Revision (incorporated by reference—see § 60.17), with ranges 0-10/0-100 ppm (N = 10/1) to test the applicant fuel gas stream for $H_2$ S; and

(v) A description of how the 2 weeks (or seven samples for infrequently operated fuel gas streams/systems) of monitoring results compares to the typical range of $H_2$ S concentration (fuel quality) expected for the fuel gas stream/system going to the affected fuel gas combustion device (e.g., the 2 weeks of daily detector tube results for a frequently operated loading rack included the entire range of products loaded out, and, therefore, should be representative of typical operating conditions affecting $H_2$ S content in the fuel gas stream going to the loading rack flare).

(2) The effective date of the exemption is the date of submission of the information required in paragraph (b)(1) of this section).

(3) No further action is required unless refinery operating conditions change in such a way that affects the exempt fuel gas stream/system (e.g., the stream composition changes). If such a change occurs, the owner or operator will follow the procedures in paragraph (b)(3)(i), (b)(3)(ii), or (b)(3)(iii) of this section.

(i) If the operation change results in a sulfur content that is still within the range of concentrations included in the original application, the owner or operator shall conduct an $H_2$ S test on a grab sample and record the results as proof that the concentration is still within the range.

(ii) If the operation change results in a sulfur content that is outside the range of concentrations included in the original application, the owner or operator may submit new information following the procedures of paragraph (b)(1) of this section within 60 days (or within 30 days after the seventh grab sample is tested for infrequently operated process units).

(iii) If the operation change results in a sulfur content that is outside the range of concentrations included in the original application and the owner or operator chooses not to submit new information to support an exemption, the owner or operator must begin $H_2$ S monitoring using daily stain sampling to demonstrate compliance. The owner or operator must begin monitoring according to the requirements in paragraphs (a)(1) or (a)(2) of this section as soon as practicable but in no case later than 180 days after the operation change. During daily stain tube sampling, a daily sample exceeding 162 ppmv is an exceedance of the 3-hour $H_2$ S concentration limit. The owner or operator must determine a rolling 365-day average using the stain sampling results; an average $H_2$ S concentration of 5 ppmv must be used for days prior to the operation change.

(c) The average coke burn-off rate (Mg (tons) per hour) and hours of operation shall be recorded daily for any fluid catalytic cracking unit catalyst regenerator subject to § 60.102, § 60.103, or § 60.104(b)(2).

(d) For any fluid catalytic cracking unit catalyst regenerator under § 60.102 that uses an incinerator-waste heat boiler to combust the exhaust gases from the catalyst regenerator, the owner or operator shall record daily the rate of combustion of liquid or solid fossil-fuels and the hours of operation during which liquid or solid fossil-fuels are combusted in the incinerator-waste heat boiler.

(e) For the purpose of reports under § 60.7(c), periods of excess emissions that shall be determined and reported are defined as follows:

NOTE: All averages, except for opacity, shall be determined as the arithmetic average of the applicable 1-hour averages, e.g., the rolling 3-hour average shall be determined as the arithmetic average of three contiguous 1-hour averages.

(1) *Opacity.* All 1-hour periods that contain two or more 6-minute periods during which the average opacity as measured by the continuous monitoring system under § 60.105(a)(1) exceeds 30 percent.

(2) *Carbon monoxide.* All 1-hour periods during which the average CO concentration as measured by the CO continuous monitoring system under § 60.105(a)(2) exceeds 500 ppm.

(3) *Sulfur dioxide from fuel gas combustion.* (i) All rolling 3-hour periods during which the average concentration of $SO_2$ as measured by the $SO_2$ continuous monitoring system under § 60.105(a)(3) exceeds 20 ppm (dry basis, zero percent excess air); or

(ii) All rolling 3-hour periods during which the average concentration of $H_2$ S as measured by the $H_2$ S continuous monitoring system under § 60.105(a)(4) exceeds 230 mg/dscm (0.10 gr/dscf).

(4) *Sulfur dioxide from Claus sulfur recovery plants.* (i) All 12-hour periods during which the average concentration of $SO_2$ as measured by the $SO_2$ continuous monitoring system under § 60.105(a)(5) exceeds 250 ppm (dry basis, zero percent excess air); or

(ii) All 12-hour periods during which the average concentration of reduced sulfur (as $SO_2$ ) as measured by the reduced sulfur continuous monitoring system under § 60.105(a)(6) exceeds 300 ppm; or

(iii) All 12-hour periods during which the average concentration of $SO_2$ as measured by the $SO_2$ continuous monitoring system under § 60.105(a)(7) exceeds 250 ppm (dry basis, zero percent excess air).

[39 FR 9315, Mar. 8, 1974, as amended at 40 FR 46259, Oct. 6, 1975; 42 FR 32427, June 24, 1977; 42 FR 39389, Aug. 4, 1977; 43 FR 10869, Mar. 15, 1978; 48 FR 23611, May 25, 1983; 50 FR 31701, Aug. 5, 1985; 54 FR 34028, Aug. 17, 1989; 55 FR 40175, Oct. 2, 1990; 65 FR 61754, Oct. 17, 2000; 73 FR 35866, June 24, 2008]

**§ 60.106 Test methods and procedures.**

(a) In conducting the performance tests required in § 60.8, the owner or operator shall use as reference methods and procedures the test methods in appendix A of this part or other methods and procedures as specified in this section, except as provided in § 60.8(b).

(b) The owner or operator shall determine compliance with the particulate matter (PM) standards in § 60.102(a) as follows:

(1) The emission rate (E) of PM shall be computed for each run using the following equation:

$$E = \frac{c_s Q_{sd}}{K R_c}$$

Where:

E = Emission rate of PM, kg/Mg (lb/ton) of coke burn-off.

$c_s$ = Concentration of PM, g/dscm (gr/dscf).

$Q_{sd}$ = Volumetric flow rate of effluent gas, dscm/hr (dscf/hr).

$R_c$ = Coke burn-off rate, Mg/hr (ton/hr) coke.

K=Conversion factor, 1,000 g/kg (7,000 gr/lb).

(2) Method 5B or 5F is to be used to determine particulate matter emissions and associated moisture content from affected facilities without wet FGD systems; only Method 5B is to be used after wet FGD systems. The sampling time for each run shall be at least 60 minutes and the sampling rate shall be at least 0.015 dscm/min (0.53 dscf/min), except that shorter sampling times may be approved by the Administrator when process variables or other factors preclude sampling for at least 60 minutes.

(3) The coke burn-off rate ($R_c$ ) shall be computed for each run using the following equation:

$$R_c = K_1 Q_r (\%CO_2 + \%CO) + K_2 Q_a - K_3 Q_r (\%CO/2 + \%CO_2 + \%O_2) + K_3 Q_{oxy} (\%O_{oxy})$$

Where:

$R_c$ = Coke burn-off rate, kilograms per hour (kg/hr) (lb/hr).

$Q_r$ = Volumetric flow rate of exhaust gas from fluid catalytic cracking unit regenerator before entering the emission control system, dscm/min (dscf/min).

$Q_a$ = Volumetric flow rate of air to fluid catalytic cracking unit regenerator, as determined from the fluid catalytic cracking unit control room instrumentation, dscm/min (dscf/min).

$Q_{oxy}$ = Volumetric flow rate of $O_2$ enriched air to fluid catalytic cracking unit regenerator, as determined from the fluid catalytic cracking unit control room instrumentation, dscm/min (dscf/min).

$\%CO_2$ = Carbon dioxide concentration in fluid catalytic cracking unit regenerator exhaust, percent by volume (dry basis).

%CO = CO concentration in FCCU regenerator exhaust, percent by volume (dry basis).

$\%O_2$ = $O_2$ concentration in fluid catalytic cracking unit regenerator exhaust, percent by volume (dry basis).

$\%O_{oxy}$ = $O_2$ concentration in $O_2$ enriched air stream inlet to the fluid catalytic cracking unit regenerator, percent by volume (dry basis).

$K_1$ = Material balance and conversion factor, 0.2982 (kg-min)/(hr-dscm-%) [0.0186 (lb-min)/(hr-dscf-%)].

$K_2$ = Material balance and conversion factor, 2.088 (kg-min)/(hr-dscm) [0.1303 (lb-min)/(hr-dscf)].

$K_3$ = Material balance and conversion factor, 0.0994 (kg-min)/(hr-dscm-%) [0.00624 (lb-min)/(hr-dscf-%)].

(i) Method 2 shall be used to determine the volumetric flow rate ($Q_r$ ).

(ii) The emission correction factor, integrated sampling and analysis procedure of Method 3B shall be used to determine $CO_2$ , CO, and $O_2$ concentrations.

(4) Method 9 and the procedures of § 60.11 shall be used to determine opacity.

(c) If auxiliary liquid or solid fossil-fuels are burned in an incinerator-waste heat boiler, the owner or operator shall determine the emission rate of PM permitted in § 60.102(b) as follows:

(1) The allowable emission rate ($E_s$ ) of PM shall be computed for each run using the following equation:

$E_s = F + A (H/R_c)$

*Where:*

$E_s$ = Emission rate of PM allowed, kg/Mg (lb/ton) of coke burn-off in catalyst regenerator.

F = Emission standard, 1.0 kg/Mg (2.0 lb/ton) of coke burn-off in catalyst regenerator.

A = Allowable incremental rate of PM emissions, 43 g/GJ (0.10 lb/million Btu).

H = Heat input rate from solid or liquid fossil fuel, GJ/hr (million Btu/hr).

$R_c$ = Coke burn-off rate, Mg coke/hr (ton coke/hr).

(2) Procedures subject to the approval of the Administrator shall be used to determine the heat input rate.

(3) The procedure in paragraph (b)(3) of this section shall be used to determine the coke burn-off rate ($R_c$ ).

(d) The owner or operator shall determine compliance with the CO standard in § 60.103(a) by using the integrated sampling technique of Method 10 to determine the CO concentration (dry basis). The sampling time for each run shall be 60 minutes.

(e)(1) The owner or operator shall determine compliance with the $H_2$ S standard in § 60.104(a)(1) as follows: Method 11, 15, 15A, or 16 shall be used to determine the $H_2$ S concentration. The gases entering the sampling train should be at about atmospheric pressure. If the pressure in the refinery fuel gas lines is relatively high, a flow control valve may be used to reduce the pressure. If the line pressure is high enough to operate the sampling train without a

vacuum pump, the pump may be eliminated from the sampling train. The sample shall be drawn from a point near the centroid of the fuel gas line.

(i) For Method 11, the sampling time and sample volume shall be at least 10 minutes and 0.010 dscm (0.35 dscf). Two samples of equal sampling times shall be taken at about 1-hour intervals. The arithmetic average of these two samples shall constitute a run. For most fuel gases, sampling times exceeding 20 minutes may result in depletion of the collection solution, although fuel gases containing low concentrations of $H_2S$ may necessitate sampling for longer periods of time.

(ii) For Method 15 or 16, at least three injects over a 1-hour period shall constitute a run.

(iii) For Method 15A, a 1-hour sample shall constitute a run.

(2) Where emissions are monitored by § 60.105(a)(3), compliance with § 60.104(a)(1) shall be determined using Method 6 or 6C and Method 3 or 3A. The method ANSI/ASME PTC 19.10-1981, “Flue and Exhaust Gas Analyses,” (incorporated by reference—see § 60.17) is an acceptable alternative to EPA Method 6. A 1-hour sample shall constitute a run. Method 6 samples shall be taken at a rate of approximately 2 liters/min. The ppm correction factor (Method 6) and the sampling location in paragraph (f)(1) of this section apply. Method 4 shall be used to determine the moisture content of the gases. The sampling point for Method 4 shall be adjacent to the sampling point for Method 6 or 6C.

(f) The owner or operator shall determine compliance with the $SO_2$ and the $H_2S$ and reduced sulfur standards in § 60.104(a)(2) as follows:

(1) Method 6 shall be used to determine the $SO_2$ concentration. The concentration in mg/dscm obtained by Method 6 or 6C is multiplied by 0.3754 to obtain the concentration in ppm. The sampling point in the duct shall be the centroid of the cross section if the cross-sectional area is less than 5.00 $m^2$ (53.8 $ft^2$ ) or at a point no closer to the walls than 1.00 m (39.4 in.) if the cross-sectional area is 5.00 $m^2$ or more and the centroid is more than 1 m from the wall. The sampling time and sample volume shall be at least 10 minutes and 0.010 dscm (0.35 dscf) for each sample. Eight samples of equal sampling times shall be taken at about 30-minute intervals. The arithmetic average of these eight samples shall constitute a run. For Method 6C, a run shall consist of the arithmetic average of four 1-hour samples. Method 4 shall be used to determine the moisture content of the gases. The sampling point for Method 4 shall be adjacent to the sampling point for Method 6 or 6C. The sampling time for each sample shall be equal to the time it takes for two Method 6 samples. The moisture content from this sample shall be used to correct the corresponding Method 6 samples for moisture. For documenting the oxidation efficiency of the control device for reduced sulfur compounds, Method 15 shall be used following the procedures of paragraph (f)(2) of this section.

(2) Method 15 shall be used to determine the reduced sulfur and $H_2S$ concentrations. Each run shall consist of 16 samples taken over a minimum of 3 hours. The sampling point shall be the same as that described for Method 6 in paragraph (f)(1) of this section. To ensure minimum residence time for the sample inside the sample lines, the sampling rate shall be at least 3.0 lpm (0.10 cfm). The $SO_2$ equivalent for each run shall be calculated after being corrected for moisture and oxygen as the arithmetic average of the $SO_2$ equivalent for each sample during the run. Method 4 shall be used to determine the moisture content of the gases as the paragraph (f)(1) of this section. The sampling time for each sample shall be equal to the time it takes for four Method 15 samples.

(3) The oxygen concentration used to correct the emission rate for excess air shall be obtained by the integrated sampling and analysis procedure of Method 3 or 3A. The samples shall be taken simultaneously with the $SO_2$ , reduced sulfur and $H_2S$, or moisture samples. The $SO_2$ , reduced sulfur, and $H_2S$ samples shall be corrected to zero percent excess air using the equation in paragraph (h)(6) of this section.

(g) Each performance test conducted for the purpose of determining compliance under § 60.104(b) shall consist of all testing performed over a 7-day period using Method 6 or 6C and Method 3 or 3A. To determine compliance, the arithmetic mean of the results of all the tests shall be compared with the applicable standard.

(h) For the purpose of determining compliance with § 60.104(b)(1), the following calculation procedures shall be used:

(1) Calculate each 1-hour average concentration (dry, zero percent oxygen, ppmv) of sulfur dioxide at both the inlet and the outlet to the add-on control device as specified in § 60.13(h). These calculations are made using the emission data collected under § 60.105(a).

(2) Calculate a 7-day average (arithmetic mean) concentration of sulfur dioxide for the inlet and for the outlet to the add-on control device using all of the 1-hour average concentration values obtained during seven successive 24-hour periods.

(3) Calculate the 7-day average percent reduction using the following equation:

$Rso_2 = 100(Cso_2 (i) - Cso_2 (o))/Cso_2 (i)$

where:

$Rso_2$ = 7-day average sulfur dioxide emission reduction, percent

$Cso_2$ (i) = sulfur dioxide emission concentration determined in § 60.106(h)(2) at the inlet to the add-on control device, ppmv

$Cso_2$ (o) = sulfur dioxide emission concentration determined in § 60.106(h)(2) at the outlet to the add-on control device, ppmv

100 = conversion factor, decimal to percent

(4) Outlet concentrations of sulfur dioxide from the add-on control device for compliance with the 50 ppmv standard, reported on a dry, $O_2$ -free basis, shall be calculated using the procedures outlined in § 60.106(h)(1) and (2) above, but for the outlet monitor only.

(5) If supplemental sampling data are used for determining the 7-day averages under paragraph (h) of this section and such data are not hourly averages, then the value obtained for each supplemental sample shall be assumed to represent the hourly average for each hour over which the sample was obtained.

(6) For the purpose of adjusting pollutant concentrations to zero percent oxygen, the following equation shall be used:

$C_{adj} = C_{meas} [20.9_c /(20.9 - \%O_2 )]$

where:

$C_{adj}$ = pollutant concentration adjusted to zero percent oxygen, ppm or g/dscm

$C_{meas}$ = pollutant concentration measured on a dry basis, ppm or g/dscm

$20.9_c$ = 20.9 percent oxygen−0.0 percent oxygen (defined oxygen correction basis), percent

20.9 = oxygen concentration in air, percent

$\%O_2$ = oxygen concentration measured on a dry basis, percent

(i) For the purpose of determining compliance with § 60.104(b)(2), the following reference methods and calculation procedures shall be used except as provided in paragraph (i)(12) of this section:

(1) One 3-hour test shall be performed each day.

(2) For gases released to the atmosphere from the fluid catalytic cracking unit catalyst regenerator:

(i) Method 8 as modified in § 60.106(i)(3) for moisture content and for the concentration of sulfur oxides calculated as sulfur dioxide,

(ii) Method 1 for sample and velocity traverses,

(iii) Method 2 calculation procedures (data obtained from Methods 3 and 8) for velocity and volumetric flow rate, and

(iv) Method 3 for gas analysis.

(3) Method 8 shall be modified by the insertion of a heated glass fiber filter between the probe and first impinger. The probe liner and glass fiber filter temperature shall be maintained above 160 °C (320 °F). The isopropanol impinger shall be eliminated. Sample recovery procedures described in Method 8 for container No. 1 shall be eliminated. The heated glass fiber filter also shall be excluded; however, rinsing of all connecting glassware after the heated glass fiber filter shall be retained and included in container No. 2. Sampled volume shall be at least 1 dscm.

(4) For Method 3, the integrated sampling technique shall be used.

(5) Sampling time for each run shall be at least 3 hours.

(6) All testing shall be performed at the same location. Where the gases discharged by the fluid catalytic cracking unit catalyst regenerator pass through an incinerator-waste heat boiler in which auxiliary or supplemental gaseous, liquid, or solid fossil fuel is burned, testing shall be conducted at a point between the regenerator outlet and the incinerator-waste heat boiler. An alternative sampling location after the waste heat boiler may be used if alternative coke burn-off rate equations, and, if requested, auxiliary/supplemental fuel $SO_X$ credits, have been submitted to and approved by the Administrator prior to sampling.

(7) Coke burn-off rate shall be determined using the procedures specified under paragraph (b)(3) of this section, unless paragraph (i)(6) of this section applies.

(8) Calculate the concentration of sulfur oxides as sulfur dioxide using equation 8-3 in Section 6.5 of Method 8 to calculate and report the total concentration of sulfur oxides as sulfur dioxide ($Cso_x$).

(9) Sulfur oxides emission rate calculated as sulfur dioxide shall be determined for each test run by the following equation:

$$E_{so_x} = C_{so_x} Q_{sd} / K$$

Where:

$E_{SOx}$ = sulfur oxides emission rate calculated as sulfur dioxide, kg/hr (lb/hr)

$C_{SOx}$ = sulfur oxides emission concentration calculated as sulfur dioxide, g/dscm (gr/dscf)

$Q_{sd}$ = dry volumetric stack gas flow rate corrected to standard conditions, dscm/hr (dscf/hr)

K=1,000 g/kg (7,000 gr/lb)

(10) Sulfur oxides emissions calculated as sulfur dioxide shall be determined for each test run by the following equation:

$$R_{so_x} = \left( E_{so_x} / R_c \right)$$

Where:

$R_{SOx}$ = Sulfur oxides emissions calculated as kg sulfur dioxide per Mg (lb/ton) coke burn-off.

$E_{SOx}$ = Sulfur oxides emission rate calculated as sulfur dioxide, kg/hr (lb/hr).

$R_c$ = Coke burn-off rate, Mg/hr (ton/hr).

(11) Calculate the 7-day average sulfur oxides emission rate as sulfur dioxide per Mg (ton) of coke burn-off by dividing the sum of the individual daily rates by the number of daily rates summed.

(12) An owner or operator may, upon approval by the Administrator, use an alternative method for determining compliance with § 60.104(b)(2), as provided in § 60.8(b). Any requests for approval must include data to demonstrate to the Administrator that the alternative method would produce results adequate for the determination of compliance.

(j) For the purpose of determining compliance with § 60.104(b)(3), the following analytical methods and calculation procedures shall be used:

(1) One fresh feed sample shall be collected once per 8-hour period.

(2) Fresh feed samples shall be analyzed separately by using any one of the following applicable analytical test methods: ASTM D129-64, 78, or 95, ASTM D1552-83 or 95, ASTM D2622-87, 94, or 98, or ASTM D1266-87, 91, or 98. (These methods are incorporated by reference: see § 60.17.) The applicable range of some of these ASTM methods is not adequate to measure the levels of sulfur in some fresh feed samples. Dilution of samples prior to analysis with verification of the dilution ratio is acceptable upon prior approval of the Administrator.

(3) If a fresh feed sample cannot be collected at a single location, then the fresh feed sulfur content shall be determined as follows:

(i) Individual samples shall be collected once per 8-hour period for each separate fresh feed stream charged directly into the riser or reactor of the fluid catalytic cracking unit. For each sample location the fresh feed volumetric flow rate at the time of collecting the fresh feed sample shall be measured and recorded. The same method for measuring volumetric flow rate shall be used at all locations.

(ii) Each fresh feed sample shall be analyzed separately using the methods specified under paragraph (j)(2) of this section.

(iii) Fresh feed sulfur content shall be calculated for each 8-hour period using the following equation:

$$S_f = \sum_{i=1}^{n} \frac{S_i Q_i}{Q_f}$$

where:

$S_f$ = fresh feed sulfur content expressed in percent by weight of fresh feed.

n = number of separate fresh feed streams charged directly to the riser or reactor of the fluid catalytic cracking unit.

$Q_f$ = total volumetric flow rate of fresh feed charged to the fluid catalytic cracking unit.

$S_i$ = fresh feed sulfur content expressed in percent by weight of fresh feed for the “ith” sampling location.

$Q_i$ = volumetric flow rate of fresh feed stream for the “ith” sampling location.

(4) Calculate a 7-day average (arithmetic mean) sulfur content of the fresh feed using all of the fresh feed sulfur content values obtained during seven successive 24-hour periods.

(k) The test methods used to supplement continuous monitoring system data to meet the minimum data requirements in § 60.104(d) will be used as described below or as otherwise approved by the Administrator.

(1) Methods 6, 6B, or 8 are used. The sampling location(s) are the same as those specified for the monitor.

(2) For Method 6, the minimum sampling time is 20 minutes and the minimum sampling volume is 0.02 dscm (0.71 dscf) for each sample. Samples are taken at approximately 60-minute intervals. Each sample represents a 1-hour average. A minimum of 18 valid samples is required to obtain one valid day of data.

(3) For Method 6B, collection of a sample representing a minimum of 18 hours is required to obtain one valid day of data.

(4) For Method 8, the procedures as outlined in this section are used. The equivalent of 16 hours of sampling is required to obtain one valid day of data.

[39 FR 9315, Mar. 8, 1974, as amended at 43 FR 10869, Mar. 15, 1978; 51 FR 42842, Nov. 26, 1986; 52 FR 20392, June 1, 1987; 53 FR 41333, Oct. 21, 1988; 54 FR 34028, Aug. 17, 1989; 55 FR 40176, Oct. 2, 1990; 56 FR 4176, Feb. 4, 1991; 65 FR 61754, Oct. 17, 2000; 71 FR 55127, Sept. 21, 2006; 73 FR 35867, June 24, 2008; 77 FR 56463, Sep. 12, 2012]

**§ 60.107 Reporting and recordkeeping requirements.**

(a) Each owner or operator subject to § 60.104(b) shall notify the Administrator of the specific provisions of § 60.104(b) with which the owner or operator seeks to comply. Notification shall be submitted with the notification of initial startup required by § 60.7(a)(3). If an owner or operator elects at a later date to comply with an alternative provision of § 60.104(b), then the Administrator shall be notified by the owner or operator in the report described in paragraph (c) of this section.

(b) Each owner or operator subject to § 60.104(b) shall record and maintain the following information:

(1) If subject to § 60.104(b)(1),

(i) All data and calibrations from continuous monitoring systems located at the inlet and outlet to the control device, including the results of the daily drift tests and quarterly accuracy assessments required under appendix F, Procedure 1;

(ii) Measurements obtained by supplemental sampling (refer to § 60.105(a)(13) and § 60.106(k)) for meeting minimum data requirements; and

(iii) The written procedures for the quality control program required by appendix F, Procedure 1.

(2) If subject to § 60.104(b)(2), measurements obtained in the daily Method 8 testing, or those obtained by alternative measurement methods, if § 60.106(i)(12) applies.

(3) If subject to § 60.104(b)(3), data obtained from the daily feed sulfur tests.

(4) Each 7-day rolling average compliance determination.

(c) Each owner or operator subject to § 60.104(b) shall submit a report except as provided by paragraph (d) of this section. The following information shall be contained in the report:

(1) Any 7-day period during which:

(i) The average percent reduction and average concentration of sulfur dioxide on a dry, $O_2$ -free basis in the gases discharged to the atmosphere from any fluid cracking unit catalyst regenerator for which the owner or operator seeks to comply with § 60.104(b)(1) is below 90 percent and above 50 ppmv, as measured by the continuous monitoring

system prescribed under § 60.105(a)(8), or above 50 ppmv, as measured by the outlet continuous monitoring system prescribed under § 60.105(a)(9). The average percent reduction and average sulfur dioxide concentration shall be determined using the procedures specified under § 60.106(h);

(ii) The average emission rate of sulfur dioxide in the gases discharged to the atmosphere from any fluid catalytic cracking unit catalyst regenerator for which the owner or operator seeks to comply with § 60.104(b)(2) exceeds 9.8 kg $SO_X$ per 1,000 kg coke burn-off, as measured by the daily testing prescribed under § 60.106(i). The average emission rate shall be determined using the procedures specified under § 60.106(i); and

(iii) The average sulfur content of the fresh feed for which the owner or operator seeks to comply with § 60.104(b)(3) exceeds 0.30 percent by weight. The fresh feed sulfur content, a 7-day rolling average, shall be determined using the procedures specified under § 60.106(j).

(2) Any 30-day period in which the minimum data requirements specified in § 60.104(d) are not obtained.

(3) For each 7-day period during which an exceedance has occurred as defined in paragraphs (c)(1)(i) through (c)(1)(iii) and (c)(2) of this section:

(i) The date that the exceedance occurred;

(ii) An explanation of the exceedance;

(iii) Whether the exceedance was concurrent with a startup, shutdown, or malfunction of the fluid catalytic cracking unit or control system; and

(iv) A description of the corrective action taken, if any.

(4) If subject to § 60.104(b)(1),

(i) The dates for which and brief explanations as to why fewer than 18 valid hours of data were obtained for the inlet continuous monitoring system;

(ii) The dates for which and brief explanations as to why fewer than 18 valid hours of data were obtained for the outlet continuous monitoring system;

(iii) Identification of times when hourly averages have been obtained based on manual sampling methods;

(iv) Identification of the times when the pollutant concentration exceeded full span of the continuous monitoring system; and

(v) Description of any modifications to the continuous monitoring system that could affect the ability of the continuous monitoring system to comply with Performance Specifications 2 or 3.

(vi) Results of daily drift tests and quarterly accuracy assessments as required under appendix F, Procedure 1.

(5) If subject to § 60.104(b)(2), for each day in which a Method 8 sample result required by § 60.106(i) was not obtained, the date for which and brief explanation as to why a Method 8 sample result was not obtained, for approval by the Administrator.

(6) If subject to § 60.104(b)(3), for each 8-hour period in which a feed sulfur measurement required by § 60.106(j) was not obtained, the date for which and brief explanation as to why a feed sulfur measurement was not obtained, for approval by the Administrator.

(d) For any periods for which sulfur dioxide or oxides emissions data are not available, the owner or operator of the affected facility shall submit a signed statement indicating if any changes were made in operation of the emission control system during the period of data unavailability which could affect the ability of the system to meet the

applicable emission limit. Operations of the control system and affected facility during periods of data unavailability are to be compared with operation of the control system and affected facility before and following the period of data unavailability.

(e) For each fuel gas stream combusted in a fuel gas combustion device subject to § 60.104(a)(1), if an owner or operator determines that one of the exemptions listed in § 60.105(a)(4)(iv) applies to that fuel gas stream, the owner or operator shall maintain records of the specific exemption chosen for each fuel gas stream. If the owner or operator applies for the exemption described in § 60.105(a)(4)(iv)(D), the owner or operator must keep a copy of the application as well as the letter from the Administrator granting approval of the application.

(f) The owner or operator of an affected facility shall submit the reports required under this subpart to the Administrator semiannually for each six-month period. All semiannual reports shall be postmarked by the 30th day following the end of each six-month period.

(g) The owner or operator of the affected facility shall submit a signed statement certifying the accuracy and completeness of the information contained in the report.

[54 FR 34029, Aug. 17, 1989, as amended at 55 FR 40178, Oct. 2, 1990; 64 FR 7465, Feb. 12, 1999; 65 FR 61755, Oct. 17, 2000; 73 FR 35867, June 24, 2008]

**§ 60.108 Performance test and compliance provisions.**

(a) Section 60.8(d) shall apply to the initial performance test specified under paragraph (c) of this section, but not to the daily performance tests required thereafter as specified in § 60.108(d). Section 60.8(f) does not apply when determining compliance with the standards specified under § 60.104(b). Performance tests conducted for the purpose of determining compliance under § 60.104(b) shall be conducted according to the applicable procedures specified under § 60.106.

(b) Owners or operators who seek to comply with § 60.104(b)(3) shall meet that standard at all times, including periods of startup, shutdown, and malfunctions.

(c) The initial performance test shall consist of the initial 7-day average calculated for compliance with § 60.104(b)(1), (b)(2), or (b)(3).

(d) After conducting the initial performance test prescribed under § 60.8, the owner or operator of a fluid catalytic cracking unit catalyst regenerator subject to § 60.104(b) shall conduct a performance test for each successive 24-hour period thereafter. The daily performance tests shall be conducted according to the appropriate procedures specified under § 60.106. In the event that a sample collected under § 60.106(i) or (j) is accidentally lost or conditions occur in which one of the samples must be discontinued because of forced shutdown, failure of an irreplaceable portion of the sample train, extreme meteorological conditions, or other circumstances, beyond the owner or operators' control, compliance may be determined using available data for the 7-day period.

(e) Each owner or operator subject to § 60.104(b) who has demonstrated compliance with one of the provisions of § 60.104(b) but a later date seeks to comply with another of the provisions of § 60.104(b) shall begin conducting daily performance tests as specified under paragraph (d) of this section immediately upon electing to become subject to one of the other provisions of § 60.104(b). The owner or operator shall furnish the Administrator with a written notification of the change in the semiannual report required by § 60.107(f).

[54 FR 34030, Aug. 17, 1989, as amended at 55 FR 40178, Oct. 2, 1990; 64 FR 7466, Feb. 12, 1999; 73 FR 35867, June 24, 2008]

**§ 60.109 Delegation of authority.**

(a) In delegating implementation and enforcement authority to a State under section 111(c) of the Act, the authorities contained in paragraph (b) of this section shall be retained by the Administrator and not transferred to a State.

(b) Authorities which shall not be delegated to States:

(1) Section 60.105(a)(13)(iii),

(2) Section 60.106(i)(12).

[54 FR 34031, Aug. 17, 1989, as amended at 55 FR 40178, Oct. 2, 1990]

**Attachment I**
**To Part 70 Operating Permit Renewal No. T129-25424-00003**

[Downloaded from the eCFR on May 13, 2013]

**Electronic Code of Federal Regulations**

**Title 40: Protection of Environment**

**Part 60, Subpart K—Standards of Performance for Storage Vessels for Petroleum Liquids for Which Construction, Reconstruction, or Modification Commenced After June 11, 1973, and Prior to May 19, 1978**

**§ 60.110 Applicability and designation of affected facility.**

(a) Except as provided in § 60.110(b), the affected facility to which this subpart applies is each storage vessel for petroleum liquids which has a storage capacity greater than 151,412 liters (40,000 gallons).

(b) This subpart does not apply to storage vessels for petroleum or condensate stored, processed, and/or treated at a drilling and production facility prior to custody transfer.

(c) Subject to the requirements of this subpart is any facility under paragraph (a) of this section which:

(1) Has a capacity greater than 151, 416 liters (40,000 gallons), but not exceeding 246,052 liters (65,000 gallons), and commences construction or modification after March 8, 1974, and prior to May 19, 1978.

(2) Has a capacity greater than 246,052 liters (65,000 gallons) and commences construction or modification after June 11, 1973, and prior to May 19, 1978.

[42 FR 37937, July 25, 1977, as amended at 45 FR 23379, Apr. 4, 1980]

**§ 60.111 Definitions.**

As used in this subpart, all terms not defined herein shall have the meaning given them in the Act and in subpart A of this part.

(a) *Storage vessel* means any tank, reservoir, or container used for the storage of petroleum liquids, but does not include:

(1) Pressure vessels which are designed to operate in excess of 15 pounds per square inch gauge without emissions to the atmosphere except under emergency conditions,

(2) Subsurface caverns or porous rock reservoirs, or

(3) Underground tanks if the total volume of petroleum liquids added to and taken from a tank annually does not exceed twice the volume of the tank.

(b) *Petroleum liquids* means petroleum, condensate, and any finished or intermediate products manufactured in a petroleum refinery but does not mean Nos. 2 through 6 fuel oils as specified in ASTM D396-78, 89, 90, 92, 96, or 98, gas turbine fuel oils Nos. 2-GT through 4-GT as specified in ASTM D2880-78 or 96, or diesel fuel oils Nos. 2-D and 4-D as specified in ASTM D975-78, 96, or 98a. (These three methods are incorporated by reference—see § 60.17.)

(c) *Petroleum refinery* means each facility engaged in producing gasoline, kerosene, distillate fuel oils, residual fuel oils, lubricants, or other products through distillation of petroleum or through redistillation, cracking, extracting, or reforming of unfinished petroleum derivatives.

(d) *Petroleum* means the crude oil removed from the earth and the oils derived from tar sands, shale, and coal.

(e) *Hydrocarbon* means any organic compound consisting predominantly of carbon and hydrogen.

(f) *Condensate* means hydrocarbon liquid separated from natural gas which condenses due to changes in the temperature and/or pressure and remains liquid at standard conditions.

(g) *Custody transfer* means the transfer of produced petroleum and/or condensate, after processing and/or treating in the producing operations, from storage tanks or automatic transfer facilities to pipelines or any other forms of transportation.

(h) *Drilling and production facility* means all drilling and servicing equipment, wells, flow lines, separators, equipment, gathering lines, and auxiliary nontransportation-related equipment used in the production of petroleum but does not include natural gasoline plants.

(i) *True vapor pressure* means the equilibrium partial pressure exerted by a petroleum liquid as determined in accordance with methods described in American Petroleum Institute Bulletin 2517, Evaporation Loss from External Floating-Roof Tanks, Second Edition, February 1980 (incorporated by reference—see § 60.17).

(j) *Floating roof* means a storage vessel cover consisting of a double deck, pontoon single deck, internal floating cover or covered floating roof, which rests upon and is supported by the petroleum liquid being contained, and is equipped with a closure seal or seals to close the space between the roof edge and tank wall.

(k) *Vapor recovery system* means a vapor gathering system capable of collecting all hydrocarbon vapors and gases discharged from the storage vessel and a vapor disposal system capable of processing such hydrocarbon vapors and gases so as to prevent their emission to the atmosphere.

(l) *Reid vapor pressure* is the absolute vapor pressure of volatile crude oil and volatile nonviscous petroleum liquids, except liquified petroleum gases, as determined by ASTM D323-82 or 94 (incorporated by reference—see § 60.17).

[39 FR 9317, Mar. 8, 1974; 39 FR 13776, Apr. 17, 1974, as amended at 39 FR 20794, June 14, 1974; 45 FR 23379, Apr. 4, 1980; 48 FR 3737, Jan. 27, 1983; 52 FR 11429, Apr. 8, 1987; 65 FR 61755, Oct. 17, 2000]

**§ 60.112 Standard for volatile organic compounds (VOC).**

(a) The owner or operator of any storage vessel to which this subpart applies shall store petroleum liquids as follows:

(1) If the true vapor pressure of the petroleum liquid, as stored, is equal to or greater than 78 mm Hg (1.5 psia) but not greater than 570 mm Hg (11.1 psia), the storage vessel shall be equipped with a floating roof, a vapor recovery system, or their equivalents.

(2) If the true vapor pressure of the petroleum liquid as stored is greater than 570 mm Hg (11.1 psia), the storage vessel shall be equipped with a vapor recovery system or its equivalent.

[39 FR 9317, Mar. 8, 1974; 39 FR 13776, Apr. 17, 1974, as amended at 45 FR 23379, Apr. 4, 1980]

**§ 60.113 Monitoring of operations.**

(a) Except as provided in paragraph (d) of this section, the owner or operator subject to this subpart shall maintain a record of the petroleum liquid stored, the period of storage, and the maximum true vapor pressure of that liquid during the respective storage period.

(b) Available data on the typical Reid vapor pressure and the maximum expected storage temperature of the stored product may be used to determine the maximum true vapor pressure from nomographs contained in API Bulletin 2517, unless the Administrator specifically requests that the liquid be sampled, the actual storage temperature determined, and the Reid vapor pressure determined from the sample(s).

(c) The true vapor pressure of each type of crude oil with a Reid vapor pressure less than 13.8 kPa (2.0 psia) or whose physical properties preclude determination by the recommended method is to be determined from available data and recorded if the estimated true vapor pressure is greater than 6.9 kPa (1.0 psia).

(d) The following are exempt from the requirements of this section:

(1) Each owner or operator of each affected facility which stores petroleum liquids with a Reid vapor pressure of less than 6.9 kPa (1.0 psia) provided the maximum true vapor pressure does not exceed 6.9 kPa (1.0 psia).

(2) Each owner or operator of each affected facility equipped with a vapor recovery and return or disposal system in accordance with the requirements of § 60.112.

[45 FR 23379, Apr. 4, 1980]

**Attachment J**
**To Part 70 Operating Permit Renewal No. T129-25424-00003**

[Downloaded from the eCFR on May 20, 2013]

**Electronic Code of Federal Regulations**

**Title 40: Protection of Environment**

**40 CFR 60, Subpart GGGa—Standards of Performance for Equipment Leaks of VOC in Petroleum Refineries for Which Construction, Reconstruction, or Modification Commenced After November 7, 2006**

Source: 72 FR 64896, Nov. 16, 2007, unless otherwise noted.

**§ 60.590a Applicability and designation of affected facility.**

(a)(1) The provisions of this subpart apply to affected facilities in petroleum refineries.

(2) A compressor is an affected facility.

(3) The group of all the equipment (defined in § 60.591a) within a process unit is an affected facility.

(b) Any affected facility under paragraph (a) of this section that commences construction, reconstruction, or modification after November 7, 2006, is subject to the requirements of this subpart.

(c) Addition or replacement of equipment (defined in § 60.591a) for the purpose of process improvement which is accomplished without a capital expenditure shall not by itself be considered a modification under this subpart.

(d) Facilities subject to subpart VV, subpart VVa, subpart GGG, or subpart KKK of this part are excluded from this subpart.

(e) *Stay of standards.* Owners or operators are not required to comply with the definition of “process unit” in § 60.590 of this subpart until the EPA takes final action to require compliance and publishes a document in the FEDERAL REGISTER. While the definition of “process unit” is stayed, owners or operators should use the following definition:

*Process unit* means components assembled to produce intermediate or final products from petroleum, unfinished petroleum derivatives, or other intermediates; a process unit can operate independently if supplied with sufficient feed or raw materials and sufficient storage facilities for the product.

[49 FR 22606, May 30, 1984, as amended at 73 FR 31376, June 2, 2008]

**§ 60.591a Definitions.**

As used in this subpart, all terms not defined herein shall have the meaning given them in the Clean Air Act, in subpart A of part 60, or in subpart VVa of this part, and the following terms shall have the specific meanings given them.

*Alaskan North Slope* means the approximately 69,000 square mile area extending from the Brooks Range to the Arctic Ocean.

*Asphalt* (also known as Bitumen) is a black or dark brown solid or semi-solid thermo-plastic material possessing waterproofing and adhesive properties. It is a complex combination of higher molecular weight organic compounds containing a relatively high proportion of hydrocarbons having carbon numbers greater than C25 with a high carbon to hydrogen ratio. It is essentially non-volatile at ambient temperatures with closed cup flash point of 445 °F (230 °C) or greater.

*Equipment* means each valve, pump, pressure relief device, sampling connection system, open-ended valve or line, and flange or other connector in VOC service. For the purposes of recordkeeping and reporting only, compressors are considered equipment.

*In hydrogen service* means that a compressor contains a process fluid that meets the conditions specified in § 60.593a(b).

*In light liquid service* means that the piece of equipment contains a liquid that meets the conditions specified in § 60.593a(c).

*Petroleum* means the crude oil removed from the earth and the oils derived from tar sands, shale, and coal.

*Petroleum refinery* means any facility engaged in producing gasoline, kerosene, distillate fuel oils, residual fuel oils, lubricants, or other products through the distillation of petroleum, or through the redistillation, cracking, or reforming of unfinished petroleum derivatives.

*Process unit* means the components assembled and connected by pipes or ducts to process raw materials and to produce intermediate or final products from petroleum, unfinished petroleum derivatives, or other intermediates. A process unit can operate independently if supplied with sufficient feed or raw materials and sufficient storage facilities for the product. For the purpose of this subpart, process unit includes any feed, intermediate and final product storage vessels (except as specified in § 60.482-1a(g)), product transfer racks, and connected ducts and piping. A process unit includes all equipment as defined in this subpart.

EFFECTIVE DATE NOTE: At 73 FR 31376, June 2, 2008, § 60.591a, the definition of “process unit” was stayed until further notice.

**§ 60.592a Standards.**

(a) Each owner or operator subject to the provisions of this subpart shall comply with the requirements of §§ 60.482-1a to 60.482-10a as soon as practicable, but no later than 180 days after initial startup.

(b) For a given process unit, an owner or operator may elect to comply with the requirements of paragraphs (b)(1), (2), or (3) of this section as an alternative to the requirements in § 60.482-7a.

(1) Comply with § 60.483-1a.

(2) Comply with § 60.483-2a.

(3) Comply with the Phase III provisions in § 63.168, except an owner or operator may elect to follow the provisions in § 60.482-7a(f) instead of § 63.168 for any valve that is designated as being leakless.

(c) An owner or operator may apply to the Administrator for a determination of equivalency for any means of emission limitation that achieves a reduction in emissions of VOC at least equivalent to the reduction in emissions of VOC achieved by the controls required in this subpart. In doing so, the owner or operator shall comply with requirements of § 60.484a.

(d) Each owner or operator subject to the provisions of this subpart shall comply with the provisions of § 60.485a except as provided in § 60.593a.

(e) Each owner or operator subject to the provisions of this subpart shall comply with the provisions of §§ 60.486a and 60.487a.

**§ 60.593a Exceptions.**

(a) Each owner or operator subject to the provisions of this subpart may comply with the following exceptions to the provisions of subpart VVa of this part.

(b)(1) Compressors in hydrogen service are exempt from the requirements of § 60.592a if an owner or operator demonstrates that a compressor is in hydrogen service.

(2) Each compressor is presumed not to be in hydrogen service unless an owner or operator demonstrates that the piece of equipment is in hydrogen service. For a piece of equipment to be considered in hydrogen service, it must be determined that the percent hydrogen content can be reasonably expected always to exceed 50 percent by volume. For purposes of determining the percent hydrogen content in the process fluid that is contained in or contacts a compressor, procedures that conform to the general method described in ASTM E260-73, 91, or 96, E168-67, 77, or 92, or E169-63, 77, or 93 (incorporated by reference as specified in § 60.17) shall be used.

(3)(i) An owner or operator may use engineering judgment rather than procedures in paragraph (b)(2) of this section to demonstrate that the percent content exceeds 50 percent by volume, provided the engineering judgment demonstrates that the content clearly exceeds 50 percent by volume. When an owner or operator and the Administrator do not agree on whether a piece of equipment is in hydrogen service, however, the procedures in paragraph (b)(2) of this section shall be used to resolve the disagreement.

(ii) If an owner or operator determines that a piece of equipment is in hydrogen service, the determination can be revised only after following the procedures in paragraph (b)(2).

(c) Any existing reciprocating compressor that becomes an affected facility under provisions of § 60.14 or § 60.15 is exempt from § 60.482-3a(a), (b), (c), (d), (e), and (h) provided the owner or operator demonstrates that recasting the distance piece or replacing the compressor are the only options available to bring the compressor into compliance with the provisions of § 60.482-3a(a), (b), (c), (d), (e), and (h).

(d) An owner or operator may use the following provision in addition to § 60.485a(e): Equipment is in light liquid service if the percent evaporated is greater than 10 percent at 150 °C as determined by ASTM Method D86-78, 82, 90, 93, 95, or 96 (incorporated by reference as specified in § 60.17).

(e) Pumps in light liquid service and valves in gas/vapor and light liquid service within a process unit that is located in the Alaskan North Slope are exempt from the requirements of §§ 60.482-2a and 60.482-7a.

(f) Open-ended valves or lines containing asphalt as defined in § 60.591a are exempt from the requirements of § 60.482-6a(a) through (c).

(g) Connectors in gas/vapor or light liquid service are exempt from the requirements in § 60.482-11a, provided the owner or operator complies with § 60.482-8a for all connectors, not just those in heavy liquid service.

**Attachment K**
**To Part 70 Operating Permit Renewal No. T129-25424-00003**

[Downloaded from the eCFR on May 21, 2013]

**Electronic Code of Federal Regulations**

**Title 40: Protection of Environment**

**40 CFR 61, Subpart FF—National Emission Standard for Benzene Waste Operations**

Source: 55 FR 8346, Mar. 7, 1990, unless otherwise noted.

**§ 61.340 Applicability.**

(a) The provisions of this subpart apply to owners and operators of chemical manufacturing plants, coke by-product recovery plants, and petroleum refineries.

(b) The provisions of this subpart apply to owners and operators of hazardous waste treatment, storage, and disposal facilities that treat, store, or dispose of hazardous waste generated by any facility listed in paragraph (a) of this section. The waste streams at hazardous waste treatment, storage, and disposal facilities subject to the provisions of this subpart are the benzene-containing hazardous waste from any facility listed in paragraph (a) of this section. A hazardous waste treatment, storage, and disposal facility is a facility that must obtain a hazardous waste management permit under subtitle C of the Solid Waste Disposal Act.

(c) At each facility identified in paragraph (a) or (b) of this section, the following waste is exempt from the requirements of this subpart:

(1) Waste in the form of gases or vapors that is emitted from process fluids:

(2) Waste that is contained in a segregated stormwater sewer system.

(d) At each facility identified in paragraph (a) or (b) of this section, any gaseous stream from a waste management unit, treatment process, or wastewater treatment system routed to a fuel gas system, as defined in § 61.341, is exempt from this subpart. No testing, monitoring, recordkeeping, or reporting is required under this subpart for any gaseous stream from a waste management unit, treatment process, or wastewater treatment unit routed to a fuel gas system.

[55 FR 8346, Mar. 7, 1990, as amended at 55 FR 37231, Sept. 10, 1990; 58 FR 3095, Jan. 7, 1993; 67 FR 68531, Nov. 12, 2002]

**§ 61.341 Definitions.**

*Benzene concentration* means the fraction by weight of benzene in a waste as determined in accordance with the procedures specified in § 61.355 of this subpart.

*Car-seal* means a seal that is placed on a device that is used to change the position of a valve (e.g., from opened to closed) in such a way that the position of the valve cannot be changed without breaking the seal.

*Chemical manufacturing plant* means any facility engaged in the production of chemicals by chemical, thermal, physical, or biological processes for use as a product, co-product, by-product, or intermediate including but not limited to industrial organic chemicals, organic pesticide products, pharmaceutical preparations, paint and allied products, fertilizers, and agricultural chemicals. Examples of chemical manufacturing plants include facilities at which process units are operated to produce one or more of the following chemicals: benzenesulfonic acid, benzene, chlorobenzene, cumene, cyclohexane, ethylene, ethylbenzene, hydroquinone, linear alklylbenzene, nitrobenzene, resorcinol, sulfolane, or styrene.

*Closed-vent system* means a system that is not open to the atmosphere and is composed of piping, ductwork, connections, and, if necessary, flow inducing devices that transport gas or vapor from an emission source to a control device.

*Coke by-product recovery plant* means any facility designed and operated for the separation and recovery of coal tar derivatives (by-products) evolved from coal during the coking process of a coke oven battery.

*Container* means any portable waste management unit in which a material is stored, transported, treated, or otherwise handled. Examples of containers are drums, barrels, tank trucks, barges, dumpsters, tank cars, dump trucks, and ships.

*Control device* means an enclosed combustion device, vapor recovery system, or flare.

*Cover* means a device or system which is placed on or over a waste placed in a waste management unit so that the entire waste surface area is enclosed and sealed to minimize air emissions. A cover may have openings necessary for operation, inspection, and maintenance of the waste management unit such as access hatches, sampling ports, and gauge wells provided that each opening is closed and sealed when not in use. Example of covers include a fixed roof installed on a tank, a lid installed on a container, and an air-supported enclosure installed over a waste management unit.

*External floating roof* means a pontoon-type or double-deck type cover with certain rim sealing mechanisms that rests on the liquid surface in a waste management unit with no fixed roof.

*Facility* means all process units and product tanks that generate waste within a stationary source, and all waste management units that are used for waste treatment, storage, or disposal within a stationary source.

*Fixed roof* means a cover that is mounted on a waste management unit in a stationary manner and that does not move with fluctuations in liquid level.

*Floating roof* means a cover with certain rim sealing mechanisms consisting of a double deck, pontoon single deck, internal floating cover or covered floating roof, which rests upon and is supported by the liquid being contained, and is equipped with a closure seal or seals to close the space between the roof edge and unit wall.

*Flow indicator* means a device which indicates whether gas flow is present in a line or vent system.

*Fuel gas system* means the offsite and onsite piping and control system that gathers gaseous streams generated by facility operations, may blend them with sources of gas, if available, and transports the blended gaseous fuel at suitable pressures for use as fuel in heaters, furnaces, boilers, incinerators, gas turbines, and other combustion devices located within or outside the facility. The fuel is piped directly to each individual combustion device, and the system typically operates at pressures over atmospheric.

*Individual drain system* means the system used to convey waste from a process unit, product storage tank, or waste management unit to a waste management unit. The term includes all process drains and common junction boxes, together with their associated sewer lines and other junction boxes, down to the receiving waste management unit.

*Internal floating roof* means a cover that rests or floats on the liquid surface inside a waste management unit that has a fixed roof.

*Liquid-mounted seal* means a foam or liquid-filled primary seal mounted in contact with the liquid between the waste management unit wall and the floating roof continuously around the circumference.

*Loading* means the introduction of waste into a waste management unit but not necessarily to complete capacity (also referred to as filling).

*Maximum organic vapor pressure* means the equilibrium partial pressure exerted by the waste at the temperature equal to the highest calendar-month average of the waste storage temperature for waste stored above or below the

ambient temperature or at the local maximum monthly average temperature as reported by the National Weather Service for waste stored at the ambient temperature, as determined:

(1) In accordance with § 60.17(c); or

(2) As obtained from standard reference texts; or

(3) In accordance with § 60.17(a)(37); or

(4) Any other method approved by the Administrator.

*No detectable emissions* means less than 500 parts per million by volume (ppmv) above background levels, as measured by a detection instrument reading in accordance with the procedures specified in § 61.355(h) of this subpart.

*Oil-water separator* means a waste management unit, generally a tank or surface impoundment, used to separate oil from water. An oil-water separator consists of not only the separation unit but also the forebay and other separator basins, skimmers, weirs, grit chambers, sludge hoppers, and bar screens that are located directly after the individual drain system and prior to additional treatment units such as an air flotation unit, clarifier, or biological treatment unit. Examples of an oil-water separator incude an API separator, parallel-plate interceptor, and corrugated-plate interceptor with the associated ancillary equipment.

*Petroleum refinery* means any facility engaged in producing gasoline, kerosene, distillate fuel oils, residual fuel oils, lubricants, or other products through the distillation of petroleum, or through the redistillation, cracking, or reforming of unfinished petroleum derivatives.

*Petroleum* means the crude oil removed from the earth and the oils derived from tar sands, shale, and coal.

*Point of waste generation* means the location where the waste stream exits the process unit component or storage tank prior to handling or treatment in an operation that is not an integral part of the production process, or in the case of waste management units that generate new wastes after treatment, the location where the waste stream exits the waste management unit component.

*Process unit* means equipment assembled and connected by pipes or ducts to produce intermediate or final products. A process unit can be operated independently if supplied with sufficient fuel or raw materials and sufficient product storage facilities.

*Process unit turnaround* means the shutting down of the operations of a process unit, the purging of the contents of the process unit, the maintenance or repair work, followed by restarting of the process.

*Process unit turnaround waste* means a waste that is generated as a result of a process unit turnaround.

*Process wastewater* means water which comes in contact with benzene during manufacturing or processing operations conducted within a process unit. Process wastewater is not organic wastes, process fluids, product tank drawdown, cooling tower blowdown, steam trap condensate, or landfill leachate.

*Process wastewater stream* means a waste stream that contains only process wastewater.

*Product tank* means a stationary unit that is designed to contain an accumulation of materials that are fed to or produced by a process unit, and is constructed primarily of non-earthen materials (e.g., wood, concrete, steel, plastic) which provide structural support.

*Product tank drawdown* means any material or mixture of materials discharged from a product tank for the purpose of removing water or other contaminants from the product tank.

*Safety device* means a closure device such as a pressure relief valve, frangible disc, fusible plug, or any other type of device which functions exclusively to prevent physical damage or permanent deformation to a unit or its air emission control equipment by venting gases or vapors directly to the atmosphere during unsafe conditions resulting from an unplanned, accidental, or emergency event. For the purpose of this subpart, a safety device is not used for routine venting of gases or vapors from the vapor headspace underneath a cover such as during filling of the unit or to adjust the pressure in this vapor headspace in response to normal daily diurnal ambient temperature fluctuations. A safety device is designed to remain in a closed position during normal operations and open only when the internal pressure, or another relevant parameter, exceeds the device threshold setting applicable to the air emission control equipment as determined by the owner or operator based on manufacturer recommendations, applicable regulations, fire protection and prevention codes, standard engineering codes and practices, or other requirements for the safe handling of flammable, ignitable, explosive, reactive, or hazardous materials.

*Segregated stormwater sewer system* means a drain and collection system designed and operated for the sole purpose of collecting rainfall runoff at a facility, and which is segregated from all other individual drain systems.

*Sewer line* means a lateral, trunk line, branch line, or other enclosed conduit used to convey waste to a downstream waste management unit.

*Slop oil* means the floating oil and solids that accumulate on the surface of an oil-water separator.

*Sour water stream* means a stream that:

(1) Contains ammonia or sulfur compounds (usually hydrogen sulfide) at concentrations of 10 ppm by weight or more;

(2) Is generated from separation of water from a feed stock, intermediate, or product that contained ammonia or sulfur compounds; and

(3) Requires treatment to remove the ammonia or sulfur compounds.

*Sour water stripper* means a unit that:

(1) Is designed and operated to remove ammonia or sulfur compounds (usually hydrogen sulfide) from sour water streams;

(2) Has the sour water streams transferred to the stripper through hard piping or other enclosed system; and

(3) Is operated in such a manner that the offgases are sent to a sulfur recovery unit, processing unit, incinerator, flare, or other combustion device.

*Surface impoundment* means a waste management unit which is a natural topographic depression, man-made excavation, or diked area formed primarily of earthen materials (although it may be lined with man-made materials), which is designed to hold an accumulation of liquid wastes or waste containing free liquids, and which is not an injection well. Examples of surface impoundments are holding, storage, settling, and aeration pits, ponds, and lagoons.

*Tank* means a stationary waste management unit that is designed to contain an accumulation of waste and is constructed primarily of nonearthen materials (e.g., wood, concrete, steel, plastic) which provide structural support.

*Treatment process* means a stream stripping unit, thin-film evaporation unit, waste incinerator, or any other process used to comply with § 61.348 of this subpart.

*Vapor-mounted seal* means a foam-filled primary seal mounted continuously around the perimeter of a waste management unit so there is an annular vapor space underneath the seal. The annular vapor space is bounded by the bottom of the primary seal, the unit wall, the liquid surface, and the floating roof.

*Waste* means any material resulting from industrial, commercial, mining or agricultural operations, or from community activities that is discarded or is being accumulated, stored, or physically, chemically, thermally, or biologically treated prior to being discarded, recycled, or discharged.

*Waste management unit* means a piece of equipment, structure, or transport mechanism used in handling, storage, treatment, or disposal of waste. Examples of a waste management unit include a tank, surface impoundment, container, oil-water separator, individual drain system, steam stripping unit, thin-film evaporation unit, waste incinerator, and landfill.

*Waste stream* means the waste generated by a particular process unit, product tank, or waste management unit. The characteristics of the waste stream (e.g., flow rate, benzene concentration, water content) are determined at the point of waste generation. Examples of a waste stream include process wastewater, product tank drawdown, sludge and slop oil removed from waste management units, and landfill leachate.

*Wastewater treatment system* means any component, piece of equipment, or installation that receives, manages, or treats process wastewater, product tank drawdown, or landfill leachate prior to direct or indirect discharge in accordance with the National Pollutant Discharge Elimination System permit regulations under 40 CFR part 122. These systems typically include individual drain systems, oil-water separators, air flotation units, equalization tanks, and biological treatment units.

*Water seal controls* means a seal pot, p-leg trap, or other type of trap filled with water (e.g., flooded sewers that maintain water levels adequate to prevent air flow through the system) that creates a water barrier between the sewer line and the atmosphere. The water level of the seal must be maintained in the vertical leg of a drain in order to be considered a water seal.

[55 FR 8346, Mar. 7, 1990; 55 FR 12444, Apr. 3, 1990, as amended at 58 FR 3095, Jan. 7, 1993; 67 FR 68531, Nov. 12, 2002]

**§ 61.342 Standards: General.**

(a) An owner or operator of a facility at which the total annual benzene quantity from facility waste is less than 10 megagrams per year (Mg/yr) (11 ton/yr) shall be exempt from the requirements of paragraphs (b) and (c) of this section. The total annual benzene quantity from facility waste is the sum of the annual benzene quantity for each waste stream at the facility that has a flow-weighted annual average water content greater than 10 percent or that is mixed with water, or other wastes, at any time and the mixture has an annual average water content greater than 10 percent. The benzene quantity in a waste stream is to be counted only once without multiple counting if other waste streams are mixed with or generated from the original waste stream. Other specific requirements for calculating the total annual benzene waste quantity are as follows:

(1) Wastes that are exempted from control under §§ 61.342(c)(2) and 61.342(c)(3) are included in the calculation of the total annual benzene quantity if they have an annual average water content greater than 10 percent, or if they are mixed with water or other wastes at any time and the mixture has an annual average water content greater than 10 percent.

(2) The benzene in a material subject to this subpart that is sold is included in the calculation of the total annual benzene quantity if the material has an annual average water content greater than 10 percent.

(3) Benzene in wastes generated by remediation activities conducted at the facility, such as the excavation of contaminated soil, pumping and treatment of groundwater, and the recovery of product from soil or groundwater, are not included in the calculation of total annual benzene quantity for that facility. If the facility's total annual benzene quantity is 10 Mg/yr (11 ton/yr) or more, wastes generated by remediation activities are subject to the requirements of paragraphs (c) through (h) of this section. If the facility is managing remediation waste generated offsite, the benzene in this waste shall be included in the calculation of total annual benzene quantity in facility waste, if the waste streams have an annual average water content greater than 10 percent, or if they are mixed with water or other wastes at any time and the mixture has an annual average water content greater than 10 percent.

(4) The total annual benzene quantity is determined based upon the quantity of benzene in the waste before any waste treatment occurs to remove the benzene except as specified in § 61.355(c)(1)(i) (A) through (C).

(b) Each owner or operator of a facility at which the total annual benzene quantity from facility waste is equal to or greater than 10 Mg/yr (11 ton/yr) as determined in paragraph (a) of this section shall be in compliance with the requirements of paragraphs (c) through (h) of this section no later than 90 days following the effective date, unless a waiver of compliance has been obtained under § 61.11, or by the initial startup for a new source with an initial startup after the effective date.

(1) The owner or operator of an existing source unable to comply with the rule within the required time may request a waiver of compliance under § 61.10.

(2) As part of the waiver application, the owner or operator shall submit to the Administrator a plan under § 61.10(b)(3) that is an enforceable commitment to obtain environmental benefits to mitigate the benzene emissions that result from extending the compliance date. The plan shall include the following information:

(i) A description of the method of compliance, including the control approach, schedule for installing controls, and quantity of the benzene emissions that result from extending the compliance date;

(ii) If the control approach involves a compliance strategy designed to obtain integrated compliance with multiple regulatory requirements, a description of the other regulations involved and their effective dates; and

(iii) A description of the actions to be taken at the facility to obtain mitigating environmental benefits, including how the benefits will be obtained, the schedule for these actions, and an estimate of the quantifiable benefits that directly result from these actions.

(c) Each owner or operator of a facility at which the total annual benzene quantity from facility waste is equal to or greater than 10 Mg/yr (11 ton/yr) as determined in paragraph (a) of this section shall manage and treat the facility waste as follows:

(1) For each waste stream that contains benzene, including (but not limited to) organic waste streams that contain less than 10 percent water and aqueous waste streams, even if the wastes are not discharged to an individual drain system, the owner or operator shall:

(i) Remove or destroy the benzene contained in the waste using a treatment process or wastewater treatment system that complies with the standards specified in § 61.348 of this subpart.

(ii) Comply with the standards specified in §§ 61.343 through 61.347 of this subpart for each waste management unit that receives or manages the waste stream prior to and during treatment of the waste stream in accordance with paragraph (c)(1)(i) of this section.

(iii) Each waste management unit used to manage or treat waste streams that will be recycled to a process shall comply with the standards specified in §§ 61.343 through 61.347. Once the waste stream is recycled to a process, including to a tank used for the storage of production process feed, product, or product intermediates, unless this tank is used primarily for the storage of wastes, the material is no longer subject to paragraph (c) of this section.

(2) A waste stream is exempt from paragraph (c)(1) of this section provided that the owner or operator demonstrates initially and, thereafter, at least once per year that the flow-weighted annual average benzene concentration for the waste stream is less than 10 ppmw as determined by the procedures specified in § 61.355(c)(2) or § 61.355(c)(3).

(3) A waste stream is exempt from paragraph (c)(1) of this section provided that the owner or operator demonstrates initially and, thereafter, at least once per year that the conditions specified in either paragraph (c)(3)(i) or (c)(3)(ii) of this section are met.

(i) The waste stream is process wastewater that has a flow rate less than 0.02 liters per minute (0.005 gallons per minute) or an annual wastewater quantity of less than 10 Mg/yr (11 ton/yr); or

(ii) All of the following conditions are met:

(A) The owner or operator does not choose to exempt process wastewater under paragraph (c)(3)(i) of this section,

(B) The total annual benzene quantity in all waste streams chosen for exemption in paragraph (c)(3)(ii) of this section does not exceed 2.0 Mg/yr (2.2 ton/yr) as determined in the procedures in § 61.355(j), and

(C) The total annual benzene quantity in a waste stream chosen for exemption, including process unit turnaround waste, is determined for the year in which the waste is generated.

(d) As an alternative to the requirements specified in paragraphs (c) and (e) of this section, an owner or operator of a facility at which the total annual benzene quantity from facility waste is equal to or greater than 10 Mg/yr (11 ton/yr) as determined in paragraph (a) of this section may elect to manage and treat the facility waste as follows:

(1) The owner or operator shall manage and treat facility waste other than process wastewater in accordance with the requirements of paragraph (c)(1) of this section.

(2) The owner or operator shall manage and treat process wastewater in accordance with the following requirements:

(i) Process wastewater shall be treated to achieve a total annual benzene quantity from facility process wastewater less than 1 Mg/yr (1.1 ton/yr). Total annual benzene from facility process wastewater shall be determined by adding together the annual benzene quantity at the point of waste generation for each untreated process wastewater stream plus the annual benzene quantity exiting the treatment process for each process wastewater stream treated in accordance with the requirements of paragraph (c)(1)(i) of this section.

(ii) Each treated process wastewater stream identified in paragraph (d)(2)(i) of this section shall be managed and treated in accordance with paragraph (c)(1) of this section.

(iii) Each untreated process wastewater stream identified in paragraph (d)(2)(i) of this section is exempt from the requirements of paragraph (c)(1) of this section.

(e) As an alternative to the requirements specified in paragraphs (c) and (d) of this section, an owner or operator of a facility at which the total annual benzene quantity from facility waste is equal to or greater than 10 Mg/yr (11 ton/yr) as determined in paragraph (a) of this section may elect to manage and treat the facility waste as follows:

(1) The owner or operator shall manage and treat facility waste with a flow-weighted annual average water content of less than 10 percent in accordance with the requirements of paragraph (c)(1) of this section; and

(2) The owner or operator shall manage and treat facility waste (including remediation and process unit turnaround waste) with a flow-weighted annual average water content of 10 percent or greater, on a volume basis as total water, and each waste stream that is mixed with water or wastes at any time such that the resulting mixture has an annual water content greater than 10 percent, in accordance with the following:

(i) The benzene quantity for the wastes described in paragraph (e)(2) of this section must be equal to or less than 6.0 Mg/yr (6.6 ton/yr), as determined in § 61.355(k). Wastes as described in paragraph (e)(2) of this section that are transferred offsite shall be included in the determination of benzene quantity as provided in § 61.355(k). The provisions of paragraph (f) of this section shall not apply to any owner or operator who elects to comply with the provisions of paragraph (e) of this section.

(ii) The determination of benzene quantity for each waste stream defined in paragraph (e)(2) of this section shall be made in accordance with § 61.355(k).

(f) Rather than treating the waste onsite, an owner or operator may elect to comply with paragraph (c)(1)(i) of this section by transferring the waste offsite to another facility where the waste is treated in accordance with the requirements of paragraph (c)(1)(i) of this section. The owner or operator transferring the waste shall:

(1) Comply with the standards specified in §§ 61.343 through 61.347 of this subpart for each waste management unit that receives or manages the waste prior to shipment of the waste offsite.

(2) Include with each offsite waste shipment a notice stating that the waste contains benzene which is required to be managed and treated in accordance with the provisions of this subpart.

(g) Compliance with this subpart will be determined by review of facility records and results from tests and inspections using methods and procedures specified in § 61.355 of this subpart.

(h) Permission to use an alternative means of compliance to meet the requirements of §§ 61.342 through 61.352 of this subpart may be granted by the Administrator as provided in § 61.353 of this subpart.

[55 FR 8346, Mar. 7, 1990, as amended at 58 FR 3095, Jan. 7, 1993; 65 FR 62159, 62160, Oct. 17, 2000]

**§ 61.343 Standards: Tanks.**

(a) Except as provided in paragraph (b) of this section and in § 61.351, the owner or operator must meet the standards in paragraph (a)(1) or (2) of this section for each tank in which the waste stream is placed in accordance with § 61.342 (c)(1)(ii). The standards in this section apply to the treatment and storage of the waste stream in a tank, including dewatering.

(1) The owner or operator shall install, operate, and maintain a fixed-roof and closed-vent system that routes all organic vapors vented from the tank to a control device.

(i) The fixed-roof shall meet the following requirements:

(A) The cover and all openings (e.g., access hatches, sampling ports, and gauge wells) shall be designed to operate with no detectable emissions as indicated by an instrument reading of less than 500 ppmv above background, as determined initially and thereafter at least once per year by the methods specified in § 61.355(h) of this subpart.

(B) Each opening shall be maintained in a closed, sealed position (e.g., covered by a lid that is gasketed and latched) at all times that waste is in the tank except when it is necessary to use the opening for waste sampling or removal, or for equipment inspection, maintenance, or repair.

(C) If the cover and closed-vent system operate such that the tank is maintained at a pressure less than atmospheric pressure, then paragraph (a)(1)(i)(B) of this section does not apply to any opening that meets all of thefollowing conditions:

( *1* ) The purpose of the opening is to provide dilution air to reduce the explosion hazard;

( *2* ) The opening is designed to operate with no detectable emissions as indicated by an instrument reading of less than 500 ppmv above background, as determined initially and thereafter at least once per year by the methods specified in § 61.355(h); and

( *3* ) The pressure is monitored continuously to ensure that the pressure in the tank remains below atmospheric pressure.

(ii) The closed-vent system and control device shall be designed and operated in accordance with the requirements of § 61.349 of this subpart.

(2) The owner or operator must install, operate, and maintain an enclosure and closed-vent system that routes all organic vapors vented from the tank, located inside the enclosure, to a control device in accordance with the requirements specified in paragraph (e) of this section.

(b) For a tank that meets all the conditions specified in paragraph (b)(1) of this section, the owner or operator may elect to comply with paragraph (b)(2) of this section as an alternative to the requirements specified in paragraph (a)(1) of this section.

(1) The waste managed in the tank complying with paragraph (b)(2) of this section shall meet all of the following conditions:

(i) Each waste stream managed in the tank must have a flow-weighted annual average water content less than or equal to 10 percent water, on a volume basis as total water.

(ii) The waste managed in the tank either:

(A) Has a maximum organic vapor pressure less than 5.2 kilopascals (kPa) (0.75 pounds per square inch (psi));

(B) Has a maximum organic vapor pressure less than 27.6 kPa (4.0 psi) and is managed in a tank having design capacity less than 151 $m^3$ (40,000 gal); or

(C) Has a maximum organic vapor pressure less than 76.6 kPa (11.1 psi) and is managed in a tank having a design capacity less than 75 $m^3$ (20,000 gal).

(2) The owner or operator shall install, operate, and maintain a fixed roof as specified in paragraph (a)(1)(i).

(3) For each tank complying with paragraph (b) of this section, one or more devices which vent directly to the atmosphere may be used on the tank provided each device remains in a closed, sealed position during normal operations except when the device needs to open to prevent physical damage or permanent deformation of the tank or cover resulting from filling or emptying the tank, diurnal temperature changes, atmospheric pressure changes or malfunction of the unit in accordance with good engineering and safety practices for handling flammable, explosive, or other hazardous materials.

(c) Each fixed-roof, seal, access door, and all other openings shall be checked by visual inspection initially and quarterly thereafter to ensure that no cracks or gaps occur and that access doors and other openings are closed and gasketed properly.

(d) Except as provided in § 61.350 of this subpart, when a broken seal or gasket or other problem is identified, or when detectable emissions are measured, first efforts at repair shall be made as soon as practicable, but not later than 45 calendar days after identification.

(e) Each owner or operator who controls air pollutant emissions by using an enclosure vented through a closed-vent system to a control device must meet the requirements specified in paragraphs (e)(1) through (4) of this section.

(1) The tank must be located inside a total enclosure. The enclosure must be designed and operated in accordance with the criteria for a permanent total enclosure as specified in “Procedure T—Criteria for and Verification of a Permanent or Temporary Total Enclosure” in 40 CFR 52.741, appendix B. The enclosure may have permanent or temporary openings to allow worker access; passage of material into or out of the enclosure by conveyor, vehicles, or other mechanical means; entry of permanent mechanical or electrical equipment; or direct airflow into the enclosure. The owner or operator must perform the verification procedure for the enclosure as specified in section 5.0 of Procedure T initially when the enclosure is first installed and, thereafter, annually. A facility that has conducted an initial compliance demonstration and that performs annual compliance demonstrations in accordance with the requirements for Tank Level 2 control requirements 40 CFR 264.1084(i) or 40 CFR 265(i) is not required to make repeat demonstrations of initial and continuous compliance for the purposes of this subpart.

(2) The enclosure must be vented through a closed-vent system to a control device that is designed and operated in accordance with the standards for control devices specified in § 61.349.

(3) Safety devices, as defined in this subpart, may be installed and operated as necessary on any enclosure, closed-vent system, or control device used to comply with the requirements of paragraphs (e)(1) and (2) of this section.

(4) The closed-vent system must be designed and operated in accordance with the requirements of § 61.349.

[55 FR 8346, Mar. 7, 1990, as amended at 55 FR 18331, May 2, 1990; 58 FR 3096, Jan. 7, 1993; 67 FR 68532, Nov. 12, 2002; 68 FR 6082, Feb. 6, 2003; 68 FR 67935, Dec. 4, 2003]

**§ 61.344 Standards: Surface impoundments.**

(a) The owner or operator shall meet the following standards for each surface impoundment in which waste is placed in accordance with § 61.342(c)(1)(ii) of this subpart:

(1) The owner or operator shall install, operate, and maintain on each surface impoundment a cover (e.g., air-supported structure or rigid cover) and closed-vent system that routes all organic vapors vented from the surface impoundment to a control device.

(i) The cover shall meet the following requirements:

(A) The cover and all openings (e.g., access hatches, sampling ports, and gauge wells) shall be designed to operate with no detectable emissions as indicated by an instrument reading of less than 500 ppmv above background, initially and thereafter at least once per year by the methods specified in § 61.355(h) of this subpart.

(B) Each opening shall be maintained in a closed, sealed position (e.g., covered by a lid that is gasketed and latched) at all times that waste is in the surface impoundment except when it is necessary to use the opening for waste sampling or removal, or for equipment inspection, maintenance, or repair.

(C) If the cover and closed-vent system operate such that the enclosure of the surface impoundment is maintained at a pressure less than atmospheric pressure, then paragraph (a)(1)(i)(B) of this section does not apply to any opening that meets all of the following conditions:

( *1* ) The purpose of the opening is to provide dilution air to reduce the explosion hazard;

( *2* ) The opening is designed to operate with no detectable emissions as indicated by an instrument reading of less than 500 ppmv above background, as determined initially and thereafter at least once per year by the methods specified in § 61.355(h) of this subpart; and

( *3* ) The pressure is monitored continuously to ensure that the pressure in the enclosure of the surface impoundment remains below atmospheric pressure.

(D) The cover shall be used at all times that waste is placed in the surface impoundment except during removal of treatment residuals in accordance with 40 CFR 268.4 or closure of the surface impoundment in accordance with 40 CFR 264.228. (Note: the treatment residuals generated by these activities may be subject to the requirements of this part.)

(ii) The closed-vent system and control device shall be designed and operated in accordance with § 61.349 of this subpart.

(b) Each cover seal, access hatch, and all other openings shall be checked by visual inspection initially and quarterly thereafter to ensure that no cracks or gaps occur and that access hatches and other openings are closed and gasketed properly.

(c) Except as provided in § 61.350 of this subpart, when a broken seal or gasket or other problem is identified, or when detectable emissions are measured, first efforts at repair shall be made as soon as practicable, but not later than 15 calendar days after identification.

[55 FR 8346, Mar. 7, 1990, as amended at 58 FR 3097, Jan. 7, 1993]

**§ 61.345 Standards: Containers.**

(a) The owner or operator shall meet the following standards for each container in which waste is placed in accordance with § 61.342(c)(1)(ii) of this subpart:

(1) The owner or operator shall install, operate, and maintain a cover on each container used to handle, transfer, or store waste in accordance with the following requirements:

(i) The cover and all openings (e.g., bungs, hatches, and sampling ports) shall be designed to operate with no detectable emissions as indicated by an instrument reading of less than 500 ppmv above background, initially and thereafter at least once per year by the methods specified in § 61.355(h) of this subpart.

(ii) Except as provided in paragraph (a)(4) of this section, each opening shall be maintained in a closed, sealed position (e.g., covered by a lid that is gasketed and latched) at all times that waste is in the container except when it is necessary to use the opening for waste loading, removal, inspection, or sampling.

(2) When a waste is transferred into a container by pumping, the owner or operator shall perform the transfer using a submerged fill pipe. The submerged fill pipe outlet shall extend to within two fill pipe diameters of the bottom of the container while the container is being loaded. During loading of the waste, the cover shall remain in place and all openings shall be maintained in a closed, sealed position except for those openings required for the submerged fill pipe, those openings required for venting of the container to prevent physical damage or permanent deformation of the container or cover, and any openings complying with paragraph (a)(4) of this section.

(3) Treatment of a waste in a container, including aeration, thermal or other treatment, must be performed by the owner or operator in a manner such that while the waste is being treated the container meets the standards specified in paragraphs (a)(3)(i) through (iii) of this section, except for covers and closed-vent systems that meet the requirements in paragraph (a)(4) of this section.

(i) The owner or operator must either:

(A) Vent the container inside a total enclosure which is exhausted through a closed-vent system to a control device in accordance with the requirements of paragraphs (a)(3)(ii)(A) and (B) of this section; or

(B) Vent the covered or closed container directly through a closed-vent system to a control device in accordance with the requirements of paragraphs (a)(3)(ii)(B) and (C) of this section.

(ii) The owner or operator must meet the following requirements, as applicable to the type of air emission control equipment selected by the owner or operator:

(A) The total enclosure must be designed and operated in accordance with the criteria for a permanent total enclosure as specified in section 5 of the “Procedure T—Criteria for and Verification of a Permanent or Temporary Total Enclosure” in 40 CFR 52.741, appendix B. The enclosure may have permanent or temporary openings to allow worker access; passage of containers through the enclosure by conveyor or other mechanical means; entry of permanent mechanical or electrical equipment; or direct airflow into the enclosure. The owner or operator must perform the verification procedure for the enclosure as specified in section 5.0 of “Procedure T—Criteria for and Verification of a Permanent or Temporary Total Enclosure” initially when the enclosure is first installed and, thereafter, annually. A facility that has conducted an initial compliance demonstration and that performs annual compliance demonstrations in accordance with the Container Level 3 control requirements in 40 CFR 264.1086(e)(2)(i) or 40 CFR 265.1086(e)(2)(i) is not required to make repeat demonstrations of initial and continuous compliance for the purposes of this subpart.

(B) The closed-vent system and control device must be designed and operated in accordance with the requirements of § 61.349.

(C) For a container cover, the cover and all openings ( *e.g.,* doors, hatches) must be designed to operate with no detectable emissions as indicated by an instrument reading of less than 500 ppmv above background, initially and thereafter at least once per year by the methods specified in § 61.355(h).

(iii) Safety devices, as defined in this subpart, may be installed and operated as necessary on any container, enclosure, closed-vent system, or control device used to comply with the requirements of paragraph (a)(3)(i) of this section.

(4) If the cover and closed-vent system operate such that the container is maintained at a pressure less than atmospheric pressure, the owner or operator may operate the system with an opening that is not sealed and kept closed at all times if the following conditions are met:

(i) The purpose of the opening is to provide dilution air to reduce the explosion hazard;

(ii) The opening is designed to operate with no detectable emissions as indicated by an instrument reading of less than 500 ppmv above background, as determined initially and thereafter at least once per year by methods specified in § 61.355(h); and

(iii) The pressure is monitored continuously to ensure that the pressure in the container remains below atmospheric pressure.

(b) Each cover and all openings shall be visually inspected initially and quarterly thereafter to ensure that they are closed and gasketed properly.

(c) Except as provided in § 61.350 of this subpart, when a broken seal or gasket or other problem is identified, first efforts at repair shall be made as soon as practicable, but not later than 15 calendar days after identification.

[55 FR 8346, Mar. 7, 1990, as amended at 58 FR 3097, Jan. 7, 1993; 67 FR 68532, Nov. 12, 2002; 68 FR 67936, Dec. 4, 2003]

**§ 61.346 Standards: Individual drain systems.**

(a) Except as provided in paragraph (b) of this section, the owner or operator shall meet the following standards for each individual drain system in which waste is placed in accordance with § 61.342(c)(1)(ii) of this subpart:

(1) The owner or operator shall install, operate, and maintain on each drain system opening a cover and closed-vent system that routes all organic vapors vented from the drain system to a control device.

(i) The cover shall meet the following requirements:

(A) The cover and all openings (e.g., access hatches, sampling ports) shall be designed to operate with no detactable emissions as indicated by an instrument reading of less than 500 ppmv above background, initially and thereafter at least once per year by the methods specified in § 61.355(h) of this subpart.

(B) Each opening shall be maintained in a closed, sealed position (e.g., covered by a lid that is gasketed and latched) at all times that waste is in the drain system except when it is necessary to use the opening for waste sampling or removal, or for equipment inspection, maintenance, or repair.

(C) If the cover and closed-vent system operate such that the individual drain system is maintained at a pressure less than atmospheric pressure, then paragraph (a)(1)(i)(B) of this section does not apply to any opening that meets all of the following conditions:

( *1* ) The purpose of the opening is to provide dilution air to reduce the explosion hazard;

( *2* ) The opening is designed to operate with no detectable emissions as indicated by an instrument reading of less than 500 ppmv above background, as determined initially and thereafter at least once per year by the methods specified in § 61.355(h); and

( *3* ) The pressure is monitored continuously to ensure that the pressure in the individual drain system remains below atmospheric pressure.

(ii) The closed-vent system and control device shall be designed and operated in accordance with § 61.349 of this subpart.

(2) Each cover seal, access hatch, and all other openings shall be checked by visual inspection initially and quarterly thereafter to ensure that no cracks or gaps occur and that access hatches and other openings are closed and gasketed properly.

(3) Except as provided in § 61.350 of this subpart, when a broken seal or gasket or other problem is identified, or when detectable emissions are measured, first efforts at repair shall be made as soon as practicable, but not later than 15 calendar days after identification.

(b) As an alternative to complying with paragraph (a) of this section, an owner or operator may elect to comply with the following requirements:

(1) Each drain shall be equipped with water seal controls or a tightly sealed cap or plug.

(2) Each junction box shall be equipped with a cover and may have a vent pipe. The vent pipe shall be at least 90 cm (3 ft) in length and shall not exceed 10.2 cm (4 in) in diameter.

(i) Junction box covers shall have a tight seal around the edge and shall be kept in place at all times, except during inspection and maintenance.

(ii) One of the following methods shall be used to control emissions from the junction box vent pipe to the atmosphere:

(A) Equip the junction box with a system to prevent the flow of organic vapors from the junction box vent pipe to the atmosphere during normal operation. An example of such a system includes use of water seal controls on the junction box. A flow indicator shall be installed, operated, and maintained on each junction box vent pipe to ensure that organic vapors are not vented from the junction box to the atmosphere during normal operation.

(B) Connect the junction box vent pipe to a closed-vent system and control device in accordance with § 61.349 of this subpart.

(3) Each sewer line shall not be open to the atmosphere and shall be covered or enclosed in a manner so as to have no visual gaps or cracks in joints, seals, or other emission interfaces.

(4) Equipment installed in accordance with paragraphs (b)(1), (b)(2), or (b)(3) of this section shall be inspected as follows:

(i) Each drain using water seal controls shall be checked by visual or physical inspection initially and thereafter quarterly for indications of low water levels or other conditions that would reduce the effectiveness of water seal controls.

(ii) Each drain using a tightly sealed cap or plug shall be visually inspected initially and thereafter quarterly to ensure caps or plugs are in place and properly installed.

(iii) Each junction box shall be visually inspected initially and thereafter quarterly to ensure that the cover is in place and to ensure that the cover has a tight seal around the edge.

(iv) The unburied portion of each sewer line shall be visually inspected initially and thereafter quarterly for indication of cracks, gaps, or other problems that could result in benzene emissions.

(5) Except as provided in § 61.350 of this subpart, when a broken seal, gap, crack or other problem is identified, first efforts at repair shall be made as soon as practicable, but not later than 15 calendar days after identification.

[55 FR 8346, Mar. 7, 1990, as amended at 55 FR 37231, Sept. 10, 1990; 58 FR 3097, Jan. 7, 1993]

**§ 61.347 Standards: Oil-water separators.**

(a) Except as provided in § 61.352 of this subpart, the owner or operator shall meet the following standards for each oil-water separator in which waste is placed in accordance with § 61.342(c)(1)(ii) of this subpart:

(1) The owner or operator shall install, operate, and maintain a fixed-roof and closed-vent system that routes all organic vapors vented from the oil-water separator to a control device.

(i) The fixed-roof shall meet the following requirements:

(A) The cover and all openings (e.g., access hatches, sampling ports, and gauge wells) shall be designed to operate with no detectable emissions as indicated by an instrument reading of less than 500 ppmv above background, as determined initially and thereafter at least once per year by the methods specified in § 61.355(h) of this subpart.

(B) Each opening shall be maintained in a closed, sealed position (e.g., covered by a lid that is gasketed and latched) at all times that waste is in the oil-water separator except when it is necessary to use the opening for waste sampling or removal, or for equipment inspection, maintenance, or repair.

(C) If the cover and closed-vent system operate such that the oil-water separator is maintained at a pressure less than atmospheric pressure, then paragraph (a)(1)(i)(B) of this section does not apply to any opening that meets all of the following conditions:

( *1* ) The purpose of the opening is to provide dilution air to reduce the explosion hazard;

( *2* ) The opening is designed to operate with no detectable emissions as indicated by an instrument reading of less than 500 ppmv above background, as determined initially and thereafter at least once per year by the methods specified in § 61.355(h); and

( *3* ) The pressure is monitored continuously to ensure that the pressure in the oil-water separator remains below atmospheric pressure.

(ii) The closed-vent system and control device shall be designed and operated in accordance with the requirements of § 61.349 of this subpart.

(b) Each cover seal, access hatch, and all other openings shall be checked by visual inspection initially and quarterly thereafter to ensure that no cracks or gaps occur between the cover and oil-water separator wall and that access hatches and other openings are closed and gasketed properly.

(c) Except as provided in § 61.350 of this subpart, when a broken seal or gasket or other problem is identified, or when detectable emissions are measured, first efforts at repair shall be made as soon as practicable, but not later than 15 calendar days after identification.

[55 FR 8346, Mar. 7, 1990, as amended at 58 FR 3098, Jan. 7, 1993]

**§ 61.348 Standards: Treatment processes.**

(a) Except as provided in paragraph (a)(5) of this section, the owner or operator shall treat the waste stream in accordance with the following requirements:

(1) The owner or operator shall design, install, operate, and maintain a treatment process that either:

(i) Removes benzene from the waste stream to a level less than 10 parts per million by weight (ppmw) on a flow-weighted annual average basis,

(ii) Removes benzene from the waste stream by 99 percent or more on a mass basis, or

(iii) Destroys benzene in the waste stream by incinerating the waste in a combustion unit that achieves a destruction efficiency of 99 percent or greater for benzene.

(2) Each treatment process complying with paragraphs (a)(1)(i) or (a)(1)(ii) of this section shall be designed and operated in accordance with the appropriate waste management unit standards specified in §§ 61.343 through 61.347 of this subpart. For example, if a treatment process is a tank, then the owner or operator shall comply with § 61.343 of this subpart.

(3) For the purpose of complying with the requirements specified in paragraph (a)(1)(i) of this section, the intentional or unintentional reduction in the benzene concentration of a waste stream by dilution of the waste stream with other wastes or materials is not allowed.

(4) An owner or operator may aggregate or mix together individual waste streams to create a combined waste stream for the purpose of facilitating treatment of waste to comply with the requirements of paragraph (a)(1) of this section except as provided in paragraph (a)(5) of this section.

(5) If an owner or operator aggregates or mixes any combination of process wastewater, product tank drawdown, or landfill leachate subject to § 61.342(c)(1) of this subpart together with other waste streams to create a combined waste stream for the purpose of facilitating management or treatment of waste in a wastewater treatment system, then the wastewater treatment system shall be operated in accordance with paragraph (b) of this section. These provisions apply to above-ground wastewater treatment systems as well as those that are at or below ground level.

(b) Except for facilities complying with § 61.342(e), the owner or operator that aggregates or mixes individual waste streams as defined in paragraph (a)(5) of this section for management and treatment in a wastewater treatment system shall comply with the following requirements:

(1) The owner or operator shall design and operate each waste management unit that comprises the wastewater treatment system in accordance with the appropriate standards specified in §§ 61.343 through 61.347 of this subpart.

(2) The provisions of paragraph (b)(1) of this section do not apply to any waste management unit that the owner or operator demonstrates to meet the following conditions initially and, thereafter, at least once per year:

(i) The benzene content of each waste stream entering the waste management unit is less than 10 ppmw on a flow-weighted annual average basis as determined by the procedures specified in § 61.355(c) of this subpart; and

(ii) The total annual benzene quantity contained in all waste streams managed or treated in exempt waste management units comprising the facility wastewater treatment systems is less than 1 Mg/yr (1.1 ton/yr). For this determination, total annual benzene quantity shall be calculated as follows:

(A) The total annual benzene quantity shall be calculated as the sum of the individual benzene quantities determined at each location where a waste stream first enters an exempt waste management unit. The benzene quantity discharged from an exempt waste management unit shall not be included in this calculation.

(B) The annual benzene quantity in a waste stream managed or treated in an enhanced biodegradation unit shall not be included in the calculation of the total annual benzene quantity, if the enhanced biodegradation unit is the first exempt unit in which the waste is managed or treated. A unit shall be considered enhanced biodegradation if it is a suspended-growth process that generates biomass, uses recycled biomass, and periodically removes biomass from the process. An enhanced biodegradation unit typically operates at a food-to-microorganism ratio in the range of 0.05 to 1.0 kg of biological oxygen demand per kg of biomass per day, a mixed liquor suspended solids ratio in the range of 1 to 8 grams per liter (0.008 to 0.7 pounds per liter), and a residence time in the range of 3 to 36 hours.

(c) The owner and operator shall demonstrate that each treatment process or wastewater treatment system unit, except as provided in paragraph (d) of this section, achieves the appropriate conditions specified in paragraphs (a) or (b) of this section in accordance with the following requirements:

(1) Engineering calculations in accordance with requirements specified in § 61.356(e) of this subpart; or

(2) Performance tests conducted using the test methods and procedures that meet the requirements specified in § 61.355 of this subpart.

(d) A treatment process or waste stream is in compliance with the requirements of this subpart and exempt from the requirements of paragraph (c) of this section provided that the owner or operator documents that the treatment process or waste stream is in compliance with other regulatory requirements as follows:

(1) The treatment process is a hazardous waste incinerator for which the owner or operator has been issued a final permit under 40 CFR part 270 and complies with the requirements of 40 CFR part 264, subpart O;

(2) The treatment process is an industrial furnace or boiler burning hazardous waste for energy recovery for which the owner or operator has been issued a final permit under 40 CFR part 270 and complies with the requirements of 40 CFR part 266, subpart D;

(3) The waste stream is treated by a means or to a level that meets benzene-specific treatment standards in accordance with the Land Disposal Restrictions under 40 CFR part 268, and the treatment process is designed and operated with a closed-vent system and control device meeting the requirements of § 61.349 of this subpart;

(4) The waste stream is treated by a means or to a level that meets benzene-specific effluent limitations or performance standards in accordance with the Effluent Guidelines and Standards under 40 CFR parts 401-464, and the treatment process is designed and operated with a closed-vent system and control device meeting the requirements of § 61.349 of this subpart; or

(5) The waste stream is discharged to an underground injection well for which the owner or operator has been issued a final permit under 40 CFR part 270 and complies with the requirements of 40 CFR part 122.

(e) Except as specified in paragraph (e)(3) of this section, if the treatment process or wastewater treatment system unit has any openings (e.g., access doors, hatches, etc.), all such openings shall be sealed (e.g., gasketed, latched, etc.) and kept closed at all times when waste is being treated, except during inspection and maintenance.

(1) Each seal, access door, and all other openings shall be checked by visual inspections initially and quarterly thereafter to ensure that no cracks or gaps occur and that openings are closed and gasketed properly.

(2) Except as provided in § 61.350 of this subpart, when a broken seal or gasket or other problem is identified, first efforts at repair shall be made as soon as practicable, but not later than 15 calendar days after identification.

(3) If the cover and closed-vent system operate such that the treatment process and wastewater treatment system unit are maintained at a pressure less than atmospheric pressure, the owner or operator may operate the system with an opening that is not sealed and kept closed at all times if the following conditions are met:

(i) The purpose of the opening is to provide dilution air to reduce the explosion hazard;

(ii) The opening is designed to operate with no detectable emissions as indicated by an instrument reading of less than 500 ppmv above background, as determined initially and thereafter at least once per year by the methods specified in § 61.355(h); and

(iii) The pressure is monitored continuously to ensure that the pressure in the treatment process and wastewater treatment system unit remain below atmospheric pressure.

(f) Except for treatment processes complying with paragraph (d) of this section, the Administrator may request at any time an owner or operator demonstrate that a treatment process or wastewater treatment system unit meets the applicable requirements specified in paragraphs (a) or (b) of this section by conducting a performance test using the test methods and procedures as required in § 61.355 of this subpart.

(g) The owner or operator of a treatment process or wastewater treatment system unit that is used to comply with the provisions of this section shall monitor the unit in accordance with the applicable requirements in § 61.354 of this subpart.

[55 FR 8346, Mar. 7, 1990, as amended at 55 FR 37231, Sept. 10, 1990; 58 FR 3098, Jan. 7, 1993; 65 FR 62160, Oct. 17, 2000]

**§ 61.349 Standards: Closed-vent systems and control devices.**

(a) For each closed-vent system and control device used to comply with standards in accordance with §§ 61.343 through 61.348 of this subpart, the owner or operator shall properly design, install, operate, and maintain the closed-vent system and control device in accordance with the following requirements:

(1) The closed-vent system shall:

(i) Be designed to operate with no detectable emissions as indicated by an instrument reading of less than 500 ppmv above background, as determined initially and thereafter at least once per year by the methods specified in § 61.355(h) of this subpart.

(ii) Vent systems that contain any bypass line that could divert the vent stream away from a control device used to comply with the provisions of this subpart shall install, maintain, and operate according to the manufacturer's specifications a flow indicator that provides a record of vent stream flow away from the control device at least once every 15 minutes, except as provided in paragraph (a)(1)(ii)(B) of this section.

(A) The flow indicator shall be installed at the entrance to any bypass line that could divert the vent stream away from the control device to the atmosphere.

(B) Where the bypass line valve is secured in the closed position with a car-seal or a lock-and-key type configuration, a flow indicator is not required.

(iii) All gauging and sampling devices shall be gas-tight except when gauging or sampling is taking place.

(iv) For each closed-vent system complying with paragraph (a) of this section, one or more devices which vent directly to the atmosphere may be used on the closed-vent system provided each device remains in a closed, sealed position during normal operations except when the device needs to open to prevent physical damage or permanent deformation of the closed-vent system resulting from malfunction of the unit in accordance with good engineering and safety practices for handling flammable, explosive, or other hazardous materials.

(2) The control device shall be designed and operated in accordance with the following conditions:

(i) An enclosed combustion device (e.g., a vapor incinerator, boiler, or process heater) shall meet one of the following conditions:

(A) Reduce the organic emissions vented to it by 95 weight percent or greater;

(B) Achieve a total organic compound concentration of 20 ppmv (as the sum of the concentrations for individual compounds using Method 18) on a dry basis corrected to 3 percent oxygen; or

(C) Provide a minimum residence time of 0.5 seconds at a minimum temperature of 760 °C (1,400 °F). If a boiler or process heater issued as the control device, then the vent stream shall be introduced into the flame zone of the boiler or process heater.

(ii) A vapor recovery system (e.g., a carbon adsorption system or a condenser) shall recover or control the organic emissions vented to it with an efficiency of 95 weight percent or greater, or shall recover or control the benzene emissions vented to it with an efficiency of 98 weight percent or greater.

(iii) A flare shall comply with the requirements of 40 CFR 60.18.

(iv) A control device other than those described in paragraphs (a)(2) (i) through (iii) of this section may be used provided that the following conditions are met:

(A) The device shall recover or control the organic emissions vented to it with an efficiency of 95 weight percent or greater, or shall recover or control the benzene emissions vented to it with an efficiency of 98 weight percent or greater.

(B) The owner or operator shall develop test data and design information that documents the control device will achieve an emission control efficiency of either 95 percent or greater for organic compounds or 98 percent or greater for benzene.

(C) The owner or operator shall identify:

( *1* ) The critical operating parameters that affect the emission control performance of the device;

( *2* ) The range of values of these operating parameters that ensure the emission control efficiency specified in paragraph (a)(2)(iv)(A) of this section is maintained during operation of the device; and

( *3* ) How these operating parameters will be monitored to ensure the proper operation and maintenance of the device.

(D) The owner or operator shall submit the information and data specified in paragraphs (a)(2)(iv) (B) and (C) of this section to the Administrator prior to operation of the alternative control device.

(E) The Administrator will determine, based on the information submitted under paragraph (a)(2)(iv)(D) of this section, if the control device subiect to paragraph (a)(2)(iv) of this section meets the requirements of § 61.349. The control device subject to paragraph (a)(2)(iv) of this section may be operated prior to receiving approval from the Administrator. However, if the Administrator determines that the control device does not meet the requirements of § 61.349, the facility may be subject to enforcement action beginning from the time the control device began operation.

(b) Each closed-vent system and control device used to comply with this subpart shall be operated at all times when waste is placed in the waste management unit vented to the control device except when maintenance or repair of the waste management unit cannot be completed without a shutdown of the control device.

(c) An owner and operator shall demonstrate that each control device, except for a flare, achieves the appropriate conditions specified in paragraph (a)(2) of this section by using one of the following methods:

(1) Engineering calculations in accordance with requirements specified in § 61.356(f) of this subpart; or

(2) Performance tests conducted using the test methods and procedures that meet the requirements specified in § 61.355 of this subpart.

(d) An owner or operator shall demonstrate compliance of each flare in accordance with paragraph (a)(2)(iii) of this section.

(e) The Administrator may request at any time an owner or operator demonstrate that a control device meets the applicable conditions specified in paragraph (a)(2) of this section by conducting a performance test using the test methods and procedures as required in § 61.355, and for control devices subject to paragraph (a)(2)(iv) of this section, the Administrator may specify alternative test methods and procedures, as appropriate.

(f) Each closed-vent system and control device shall be visually inspected initially and quarterly thereafter. The visual inspection shall include inspection of ductwork and piping and connections to covers and control devices for evidence of visable defects such as holes in ductwork or piping and loose connections.

(g) Except as provided in § 61.350 of this subpart, if visible defects are observed during an inspection, or if other problems are identified, or if detectable emissions are measured, a first effort to repair the closed-vent system and control device shall be made as soon as practicable but no later than 5 calendar days after detection. Repair shall be completed no later than 15 calendar days after the emissions are detected or the visible defect is observed.

(h) The owner or operator of a control device that is used to comply with the provisions of this section shall monitor the control device in accordance with § 61.354(c) of this subpart.

[55 FR 8346, Mar. 7, 1990; 55 FR 12444, Apr. 3, 1990, as amended at 55 FR 37231, Sept. 10, 1990; 58 FR 3098, Jan. 7, 1993; 65 FR 62160, Oct. 17, 2000]

**§ 61.350 Standards: Delay of repair.**

(a) Delay of repair of facilities or units that are subject to the provisions of this subpart will be allowed if the repair is technically impossible without a complete or partial facility or unit shutdown.

(b) Repair of such equipment shall occur before the end of the next facility or unit shutdown.

**§ 61.351 Alternative standards for tanks.**

(a) As an alternative to the standards for tanks specified in § 61.343 of this subpart, an owner or operator may elect to comply with one of the following:

(1) A fixed roof and internal floating roof meeting the requirements in 40 CFR 60.112b(a)(1);

(2) An external floating roof meeting the requirements of 40 CFR 60.112b (a)(2); or

(3) An alternative means of emission limitation as described in 40 CFR 60.114b.

(b) If an owner or operator elects to comply with the provisions of this section, then the owner or operator is exempt from the provisions of § 61.343 of this subpart applicable to the same facilities.

[55 FR 8346, Mar. 7, 1990, as amended at 55 FR 37231, Sept. 10, 1990]

**§ 61.352 Alternative standards for oil-water separators.**

(a) As an alternative to the standards for oil-water separators specified in § 61.347 of this subpart, an owner or operator may elect to comply with one of the following:

(1) A floating roof meeting the requirements in 40 CFR 60.693-2(a); or

(2) An alternative means of emission limitation as described in 40 CFR 60.694.

(b) For portions of the oil-water separator where it is infeasible to construct and operate a floating roof, such as over the weir mechanism, a fixed roof vented to a vapor control device that meets the requirements in §§ 61.347 and 61.349 of this subpart shall be installed and operated.

(c) Except as provided in paragraph (b) of this section, if an owner or operator elects to comply with the provisions of this section, then the owner or operator is exempt from the provisions in § 61.347 of this subpart applicable to the same facilities.

**§ 61.353 Alternative means of emission limitation.**

(a) If, in the Administrator's judgment, an alternative means of emission limitation will achieve a reduction in benzene emissions at least equivalent to the reduction in benzene emissions from the source achieved by the applicable design, equipment, work practice, or operational requirements in §§ 61.342 through 61.349, the Administrator will publish in the FEDERAL REGISTER a notice permitting the use of the alternative means for purposes of compliance with that requirement. The notice may condition the permission on requirements related to the operation and maintenance of the alternative means.

(b) Any notice under paragraph (a) of this section shall be published only after public notice and an opportunity for a hearing.

(c) Any person seeking permission under this section shall collect, verify, and submit to the Administrator information showing that the alternative means achieves equivalent emission reductions.

[55 FR 8346, Mar. 7, 1990, as amended at 58 FR 3099, Jan. 7, 1993]

**§ 61.354 Monitoring of operations.**

(a) Except for a treatment process or waste stream complying with § 61.348(d), the owner or operator shall monitor each treatment process or wastewater treatment system unit to ensure the unit is properly operated and maintained by one of the following monitoring procedures:

(1) Measure the benzene concentration of the waste stream exiting the treatment process complying with § 61.348(a)(1)(i) at least once per month by collecting and analyzing one or more samples using the procedures specified in § 61.355(c)(3).

(2) Install, calibrate, operate, and maintain according to manufacturer's specifications equipment to continuously monitor and record a process parameter (or parameters) for the treatment process or wastewater treatment system unit that indicates proper system operation. The owner or operator shall inspect at least once each operating day the data recorded by the monitoring equipment (e.g., temperature monitor or flow indicator) to ensure that the unit is operating properly.

(b) If an owner or operator complies with the requirements of § 61.348(b), then the owner or operator shall monitor each wastewater treatment system to ensure the unit is properly operated and maintained by the appropriate monitoring procedure as follows:

(1) For the first exempt waste management unit in each waste treatment train, other than an enhanced biodegradation unit, measure the flow rate, using the procedures of § 61.355(b), and the benzene concentration of each waste stream entering the unit at least once per month by collecting and analyzing one or more samples using the procedures specified in § 61.355(c)(3).

(2) For each enhanced biodegradation unit that is the first exempt waste management unit in a treatment train, measure the benzene concentration of each waste stream entering the unit at least once per month by collecting and analyzing one or more samples using the procedures specified in § 61.355(c)(3).

(c) An owner or operator subject to the requirements in § 61.349 of this subpart shall install, calibrate, maintain, and operate according to the manufacturer's specifications a device to continuously monitor the control device operation as specified in the following paragraphs, unless alternative monitoring procedures or requirements are approved for that facility by the Administrator. The owner or operator shall inspect at least once each operating day the data recorded by the monitoring equipment (e.g., temperature monitor or flow indicator) to ensure that the control device is operating properly.

(1) For a thermal vapor incinerator, a temperature monitoring device equipped with a continuous recorder. The device shall have an accuracy of ±1 percent of the temperature being monitored in °C or ±0.5 °C, whichever is greater. The temperature sensor shall be installed at a representative location in the combustion chamber.

(2) For a catalytic vapor incinerator, a temperature monitoring device equipped with a continuous recorder. The device shall be capable of monitoring temperature at two locations, and have an accuracy of ±1 percent of the temperature being monitored in °C or ±0.5 °C, whichever is greater. One temperature sensor shall be installed in the vent stream at the nearest feasible point to the catalyst bed inlet and a second temperature sensor shall be installed in the vent stream at the nearest feasible point to the catalyst bed outlet.

(3) For a flare, a monitoring device in accordance with 40 CFR 60.18(f)(2) equipped with a continuous recorder.

(4) For a boiler or process heater having a design heat input capacity less than 44 MW ($150 \times 10^6$ BTU/hr), a temperature monitoring device equipped with a continuous recorder. The device shall have an accuracy of ±1 percent of the temperature being monitored in °C or ±0.5 °C, whichever is greater. The temperature sensor shall be installed at a representative location in the combustion chamber.

(5) For a boiler or process heater having a design heat input capacity greater than or equal to 44 MW ($150 \times 10^6$ BTU/hr), a monitoring device equipped with a continuous recorder to measure a parameter(s) that indicates good combustion operating practices are being used.

(6) For a condenser, either:

(i) A monitoring device equipped with a continuous recorder to measure either the concentration level of the organic compounds or the concentration level of benzene in the exhaust vent stream from the condenser; or

(ii) A temperature monitoring device equipped with a continuous recorder. The device shall be capable of monitoring temperature at two locations, and have an accuracy of ±1 percent of the temperature being monitored in °C or ±0.5 °C, whichever is greater. One temperature sensor shall be installed at a location in the exhaust stream from the condenser, and a second temperature sensor shall be installed at a location in the coolant fluid exiting the condenser.

(7) For a carbon adsorption system that regenerates the carbon bed directly in the control device such as a fixed-bed carbon adsorber, either:

(i) A monitoring device equipped with a continuous recorder to measure either the concentration level of the organic compounds or the benzene concentration level in the exhaust vent stream from the carbon bed; or

(ii) A monitoring device equipped with a continuous recorder to measure a parameter that indicates the carbon bed is regenerated on a regular, predetermined time cycle.

(8) For a vapor recovery system other than a condenser or carbon adsorption system, a monitoring device equipped with a continuous recorder to measure either the concentration level of the organic compounds or the benzene concentration level in the exhaust vent stream from the control device.

(9) For a control device subject to the requirements of § 61.349(a)(2)(iv), devices to monitor the parameters as specified in § 61.349(a)(2)(iv)(C).

(d) For a carbon adsorption system that does not regenerate the carbon bed directly on site in the control device (e.g., a carbon canister), either the concentration level of the organic compounds or the concentration level of benzene in the exhaust vent stream from the carbon adsorption system shall be monitored on a regular schedule, and the existing carbon shall be replaced with fresh carbon immediately when carbon breakthrough is indicated. The device shall be monitored on a daily basis or at intervals no greater than 20 percent of the design carbon replacement interval, whichever is greater. As an alternative to conducting this monitoring, an owner or operator may replace the carbon in the carbon adsorption system with fresh carbon at a regular predetermined time interval that is less than the carbon replacement interval that is determined by the maximum design flow rate and either the organic concentration or the benzene concentration in the gas stream vented to the carbon adsorption system.

(e) An alternative operation or process parameter may be monitored if it can be demonstrated that another parameter will ensure that the control device is operated in conformance with these standards and the control device's design specifications.

(f) Owners or operators using a closed-vent system that contains any bypass line that could divert a vent stream from a control device used to comply with the provisions of this subpart shall do the following:

(1) Visually inspect the bypass line valve at least once every month, checking the position of the valve and the condition of the car-seal or closure mechanism required under § 61.349(a)(1)(ii) to ensure that the valve is maintained in the closed position and the vent stream is not diverted through the bypass line.

(2) Visually inspect the readings from each flow monitoring device required by § 61.349(a)(1)(ii) at least once each operating day to check that vapors are being routed to the control device as required.

(g) Each owner or operator who uses a system for emission control that is maintained at a pressure less than atmospheric pressure with openings to provide dilution air shall install, calibrate, maintain, and operate according to the manufacturer's specifications a device equipped with a continuous recorder to monitor the pressure in the unit to ensure that it is less than atmospheric pressure.

[55 FR 8346, Mar. 7, 1990, as amended at 58 FR 3099, Jan. 7, 1993; 65 FR 62160, Oct. 17, 2000]

**§ 61.355 Test methods, procedures, and compliance provisions.**

(a) An owner or operator shall determine the total annual benzene quantity from facility waste by the following procedure:

(1) For each waste stream subject to this subpart having a flow-weighted annual average water content greater than 10 percent water, on a volume basis as total water, or is mixed with water or other wastes at any time and the resulting mixture has an annual average water content greater than 10 percent as specified in § 61.342(a), the owner or operator shall:

(i) Determine the annual waste quantity for each waste stream using the procedures specified in paragraph (b) of this section.

(ii) Determine the flow-weighted annual average benzene concentration for each waste stream using the procedures specified in paragraph (c) of this section.

(iii) Calculate the annual benzene quantity for each waste stream by multiplying the annual waste quantity of the waste stream times the flow-weighted annual average benzene concentration.

(2) Total annual benzene quantity from facility waste is calculated by adding together the annual benzene quantity for each waste stream generated during the year and the annual benzene quantity for each process unit turnaround waste annualized according to paragraph (b)(4) of this section.

(3) If the total annual benzene quantity from facility waste is equal to or greater than 10 Mg/yr (11 ton/yr), then the owner or operator shall comply with the requirements of § 61.342 (c), (d), or (e).

(4) If the total annual benzene quantity from facility waste is less than 10 Mg/yr (11 ton/yr) but is equal to or greater than 1 Mg/yr (1.1 ton/yr), then the owner or operator shall:

(i) Comply with the recordkeeping requirements of § 61.356 and reporting requirements of § 61.357 of this subpart; and

(ii) Repeat the determination of total annual benzene quantity from facility waste at least once per year and whenever there is a change in the process generating the waste that could cause the total annual benzene quantity from facility waste to increase to 10 Mg/yr (11 ton/yr) or more.

(5) If the total annual benzene quantity from facility waste is less than 1 Mg/yr (1.1 ton/yr), then the owner or operator shall:

(i) Comply with the recordkeeping requirements of § 61.356 and reporting requirements of § 61.357 of this subpart; and

(ii) Repeat the determination of total annual benzene quantity from facility waste whenever there is a change in the process generating the waste that could cause the total annual benzene quantity from facility waste to increase to 1 Mg/yr (1.1 ton/yr) or more.

(6) The benzene quantity in a waste stream that is generated less than one time per year, except as provided for process unit turnaround waste in paragraph (b)(4) of this section, shall be included in the determination of total annual benzene quantity from facility waste for the year in which the waste is generated unless the waste stream is otherwise excluded from the determination of total annual benzene quantity from facility waste in accordance with paragraphs (a) through (c) of this section. The benzene quantity in this waste stream shall not be annualized or averaged over the time interval between the activities that resulted in generation of the waste, for purposes of determining the total annual benzene quantity from facility waste.

(b) For purposes of the calculation required by paragraph (a) of this section, an owner or operator shall determine the annual waste quantity at the point of waste generation, unless otherwise provided in paragraphs (b) (1), (2), (3), and (4) of this section, by one of the methods given in paragraphs (b) (5) through (7) of this section.

(1) The determination of annual waste quantity for sour water streams that are processed in sour water strippers shall be made at the point that the water exits the sour water stripper.

(2) The determination of annual waste quantity for wastes at coke by-product plants subject to and complying with the control requirements of § 61.132, 61.133, 61.134, or 61.139 of subpart L of this part shall be made at the location that the waste stream exits the process unit component or waste management unit controlled by that subpart or at the exit of the ammonia still, provided that the following conditions are met:

(i) The transfer of wastes between units complying with the control requirements of subpart L of this part, process units, and the ammonia still is made through hard piping or other enclosed system.

(ii) The ammonia still meets the definition of a sour water stripper in § 61.341.

(3) The determination of annual waste quantity for wastes that are received at hazardous waste treatment, storage, or disposal facilities from offsite shall be made at the point where the waste enters the hazardous waste treatment, storage, or disposal facility.

(4) The determination of annual waste quantity for each process unit turnaround waste generated only at 2 year or greater intervals, may be made by dividing the total quantity of waste generated during the most recent process unit turnaround by the time period (in the nearest tenth of a year) between the turnaround resulting in generation of the waste and the most recent preceding process turnaround for the unit. The resulting annual waste quantity shall be included in the calculation of the annual benzene quantity as provided in paragraph (a)(1)(iii) of this section for the year in which the turnaround occurs and for each subsequent year until the unit undergoes the next process turnaround. For estimates of total annual benzene quantity as specified in the 90-day report, required under § 61.357(a)(1), the owner or operator shall estimate the waste quantity generated during the most recent turnaround, and the time period between turnarounds in accordance with good engineering practices. If the owner or operator chooses not to annualize process unit turnaround waste, as specified in this paragraph, then the process unit turnaround waste quantity shall be included in the calculation of the annual benzene quantity for the year in which the turnaround occurs.

(5) Select the highest annual quantity of waste managed from historical records representing the most recent 5 years of operation or, if the facility has been in service for less than 5 years but at least 1 year, from historical records representing the total operating life of the facility;

(6) Use the maximum design capacity of the waste management unit; or

(7) Use measurements that are representative of maximum waste generation rates.

(c) For the purposes of the calculation required by §§ 61.355(a) of this subpart, an owner or operator shall determine the flow-weighted annual average ben- zene concentration in a manner that meets the requirements given in paragraph (c)(1) of this section using either of the methods given in paragraphs (c)(2) and (c)(3) of this section.

(1) The determination of flow-weighted annual average benzene concentration shall meet all of the following criteria:

(i) The determination shall be made at the point of waste generation except for the specific cases given in paragraphs (c)(1)(i)(A) through (D) of this section.

(A) The determination for sour water streams that are processed in sour water strippers shall be made at the point that the water exits the sour water stripper.

(B) The determination for wastes at coke by-product plants subject to and complying with the control requirements of § 61.132, 61.133, 61.134, or 61.139 of subpart L of this part shall be made at the location that the waste stream exits the process unit component or waste management unit controlled by that subpart or at the exit of the ammonia still, provided that the following conditions are met:

( *1* ) The transfer of wastes between units complying with the control requirements of subpart L of this part, process units, and the ammonia still is made through hard piping or other enclosed system.

( *2* ) The ammonia still meets the definition of a sour water stripper in § 61.341.

(C) The determination for wastes that are received from offsite shall be made at the point where the waste enters the hazardous waste treatment, storage, or disposal facility.

(D) The determination of flow-weighted annual average benzene concentration for process unit turnaround waste shall be made using either of the methods given in paragraph (c)(2) or (c)(3) of this section. The resulting flow-weighted annual average benzene concentration shall be included in the calculation of annual benzene quantity as provided in paragraph (a)(1)(iii) of this section for the year in which the turnaround occurs and for each subsequent year until the unit undergoes the next process unit turnaround.

(ii) Volatilization of the benzene by exposure to air shall not be used in the determination to reduce the benzene concentration.

(iii) Mixing or diluting the waste stream with other wastes or other materials shall not be used in the determination—to reduce the benzene concentration.

(iv) The determination shall be made prior to any treatment of the waste that removes benzene, except as specified in paragraphs (c)(1)(i)(A) through (D) of this section.

(v) For wastes with multiple phases, the determination shall provide the weighted-average benzene concentration based on the benzene concentration in each phase of the waste and the relative proportion of the phases.

(2) *Knowledge of the waste.* The owner or operator shall provide sufficient information to document the flow-weighted annual average benzene concentration of each waste stream. Examples of information that could constitute knowledge include material balances, records of chemicals purchases, or previous test results provided the results are still relevant to the current waste stream conditions. If test data are used, then the owner or operator shall provide documentation describing the testing protocol and the means by which sampling variability and analytical variability were accounted for in the determination of the flow-weighted annual average benzene concentration for the waste stream. When an owner or operator and the Administrator do not agree on determinations of the flow-weighted annual average benzene concentration based on knowledge of the waste, the procedures under paragraph (c)(3) of this section shall be used to resolve the disagreement.

(3) Measurements of the benzene concentration in the waste stream in accordance with the following procedures:

(i) Collect a minimum of three representative samples from each waste stream. Where feasible, samples shall be taken from an enclosed pipe prior to the waste being exposed to the atmosphere.

(ii) For waste in enclosed pipes, the following procedures shall be used:

(A) Samples shall be collected prior to the waste being exposed to the atmosphere in order to minimize the loss of benzene prior to sampling.

(B) A static mixer shall be installed in the process line or in a by-pass line unless the owner or operator demonstrates that installation of a static mixer in the line is not necessary to accurately determine the benzene concentration of the waste stream.

(C) The sampling tap shall be located within two pipe diameters of the static mixer outlet.

(D) Prior to the initiation of sampling, sample lines and cooling coil shall be purged with at least four volumes of waste.

(E) After purging, the sample flow shall be directed to a sample container and the tip of the sampling tube shall be kept below the surface of the waste during sampling to minimize contact with the atmosphere.

(F) Samples shall be collected at a flow rate such that the cooling coil is able to maintain a waste temperature less than 10 °C (50 °F).

(G) After filling, the sample container shall be capped immediately (within 5 seconds) to leave a minimum headspace in the container.

(H) The sample containers shall immediately be cooled and maintained at a temperature below 10 °C (50 °F) for transfer to the laboratory.

(iii) When sampling from an enclosed pipe is not feasible, a minimum of three representative samples shall be collected in a manner to minimize exposure of the sample to the atmosphere and loss of benzene prior to sampling.

(iv) Each waste sample shall be analyzed using one of the following test methods for determining the benzene concentration in a waste stream:

(A) Method 8020, Aromatic Volatile Organics, in “Test Methods for Evaluating Solid Waste, Physical/Chemical Methods,” EPA Publication No. SW-846 (incorporation by reference as specified in § 61.18 of this part);

(B) Method 8021, Volatile Organic Compounds in Water by Purge and Trap Capillary Column Gas Chromatography with Photoionization and Electrolytic Conductivity Detectors in Series in “Test Methods for Evaluating Solid Waste, Physical/Chemical Methods,” EPA Publication No. SW-846 (incorporation by reference as specified in § 61.18 of this part);

(C) Method 8240, Gas Chromatography/Mass Spectrometry for Volatile Organics in “Test Methods for Evaluating Solid Waste, Physical/Chemical Methods,” EPA Publication No. SW-846 (incorporation by reference as specified in § 61.18 of this part);

(D) Method 8260, Gas Chromatography/Mass Spectrometry for Volatile Organics: Capillary Column Technique in “Test Methods for Evaluating Solid Waste, Physical/Chemical Methods,” EPA Publication No. SW-846 (incorporation by reference as specified in § 61.18 of this part);

(E) Method 602, Purgeable Aromatics, as described in 40 CFR part 136, appendix A, Test Procedures for Analysis of Organic Pollutants, for wastewaters for which this is an approved EPA methods; or

(F) Method 624, Purgeables, as described in 40 CFR part 136, appendix A, Test Procedures for Analysis of Organic Pollutants, for wastewaters for which this is an approved EPA method.

(v) The flow-weighted annual average benzene concentration shall be calculated by averaging the results of the sample analyses as follows:

$$\bar{C} = \frac{1}{Q_t} \times \sum_{i=1}^{N} (Q_i)(C_i)$$

Where:

C=Flow-weighted annual average benzene concentration for waste stream, ppmw.

$Q_t$ =Total annual waste quantity for waste stream, kg/yr (lb/yr).

n=Number of waste samples (at least 3).

$Q_i$ =Annual waste quantity for waste stream represented by $C_i$ , kg/yr (lb/yr).

$C_i$ =Measured concentration of benzene in waste sample i, ppmw.

(d) An owner or operator using performance tests to demonstrate compliance of a treatment process with § 61.348 (a)(1)(i) shall measure the flow-weighted annual average benzene concentration of the waste stream exiting the treatment process by collecting and analyzing a minimum of three representative samples of the waste stream using the procedures in paragraph (c)(3) of this section. The test shall be conducted under conditions that exist when the treatment process is operating at the highest inlet waste stream flow rate and benzene content expected to occur. Operations during periods of startup, shutdown, and malfunction shall not constitute representative conditions for the purpose of a test. The owner or operator shall record all process information as is necessary to document the operating conditions during the test.

(e) An owner or operator using performance tests to demonstrate compliance of a treatment process with § 61.348(a)(1)(ii) of this subpart shall determine the percent reduction of benzene in the waste stream on a mass basis by the following procedure:

(1) The test shall be conducted under conditions that exist when the treatment process is operating at the highest inlet waste stream flow rate and benzene content expected to occur. Operations during periods of startup, shutdown, and malfunction shall not constitute representative conditions for the purpose of a test. The owner or operator shall record all process information as is necessary to document the operating conditions during the test.

(2) All testing equipment shall be prepared and installed as specified in the appropriate test methods.

(3) The mass flow rate of benzene entering the treatment process ($E_b$ ) shall be determined by computing the product of the flow rate of the waste stream entering the treatment process, as determined by the inlet flow meter, and the benzene concentration of the waste stream, as determined using the sampling and analytical procedures specified in paragraph (c)(2) or (c)(3) of this section. Three grab samples of the waste shall be taken at equally spaced time intervals over a 1-hour period. Each 1-hour period constitutes a run, and the performance test shall consist of a minimum of 3 runs conducted over a 3-hour period. The mass flow rate of benzene entering the treatment process is calculated as follows:

$$E_b = \frac{K}{n \times 10^6}\left[\sum_{i=1}^{n} V_i C_i\right]$$

Where:

$E_b$ = Mass flow rate of benzene entering the treatment process, kg/hr (lb/hr).

K = Density of the waste stream, kg/m$^3$ (lb/ft$^3$ ).

$V_i$ = Average volume flow rate of waste entering the treatment process during each run i, m$^3$ /hr (ft$^3$ /hr).

$C_i$ = Average concentration of benzene in the waste stream entering the treatment process during each run i, ppmw.

n = Number of runs.

$10^6$ = Conversion factor for ppmw.

(4) The mass flow rate of benzene exiting the treatment process ($E_a$ ) shall be determined by computing the product of the flow rate of the waste stream exiting the treatment process, as determined by the outlet flow meter or the inlet

flow meter, and the benzene concentration of the waste stream, as determined using the sampling and analytical procedures specified in paragraph (c)(2) or (c)(3) of this section. Three grab samples of the waste shall be taken at equally spaced time intervals over a 1-hour period. Each 1-hour period constitutes a run, and the performance test shall consist of a minimum of 3 runs conducted over the same 3-hour period at which the mass flow rate of benzene entering the treatment process is determined. The mass flow rate of benzene exiting the treatment process is calculated as follows:

$$E_a = \frac{K}{n \times 10^6}\left[\sum_{i=1}^{n} V_i C_i\right]$$

Where:

$E_a$ = Mass flow rate of benzene exiting the treatment process, kg/hr (lb/hr).

K = Density of the waste stream, kg/m$^3$ (lb/ft$^3$ ).

$V_i$ = Average volume flow rate of waste exiting the treatment process during each run i, m$^3$ /hr (ft$^3$ /hr).

$C_i$ = Average concentration of benzene in the waste stream exiting the treatment process during each run i, ppmw.

n = Number of runs.

$10^6$ = Conversion factor for ppmw.

(f) An owner or operator using performance tests to demonstrate compliance of a treatment process with § 61.348(a)(1)(iii) of this subpart shall determine the benzene destruction efficiency for the combustion unit by the following procedure:

(1) The test shall be conducted under conditions that exist when the combustion unit is operating at the highest inlet waste stream flow rate and benzene content expected to occur. Operations during periods of startup, shutdown, and malfunction shall not constitute representative conditions for the purpose of a test. The owner or operator shall record all process information necessary to document the operating conditions during the test.

(2) All testing equipment shall be prepared and installed as specified in the appropriate test methods.

(3) The mass flow rate of benzene entering the combustion unit shall be determined by computing the product of the flow rate of the waste stream entering the combustion unit, as determined by the inlet flow meter, and the benzene concentration of the waste stream, as determined using the sampling procedures in paragraph (c)(2) or (c)(3) of this section. Three grab samples of the waste shall be taken at equally spaced time intervals over a 1-hour period. Each 1-hour period constitutes a run, and the performance test shall consist of a minimum of 3 runs conducted over a 3-hour period. The mass flow rate of benzene into the combustion unit is calculated as follows:

$$E_b = \frac{K}{n \times 10^6}\left[\sum_{i=1}^{n} V_i C_i\right]$$

Where:

$E_b$ = Mass flow rate of benzene entering the combustion unit, kg/hr (lb/hr).

K = Density of the waste stream, kg/m$^3$ (lb/ft$^3$ ).

$V_i$ = Average volume flow rate of waste entering the combustion unit during each run i, $m^3$ /hr ($ft^3$ /hr).

$C_i$ = Average concentration of benzene in the waste stream entering the combustion unit during each run i, ppmw.

n = Number of runs.

$10^6$ = Conversion factor for ppmw.

(4) The mass flow rate of benzene exiting the combustion unit exhaust stack shall be determined as follows:

(i) The time period for the test shall not be less than 3 hours during which at least 3 stack gas samples are collected and be the same time period at which the mass flow rate of benzene entering the treatment process is determined. Each sample shall be collected over a 1-hour period (e.g., in a tedlar bag) to represent a time-integrated composite sample and each 1-hour period shall correspond to the periods when the waste feed is sampled.

(ii) A run shall consist of a 1-hour period during the test. For each run:

(A) The reading from each measurement shall be recorded;

(B) The volume exhausted shall be determined using Method 2, 2A, 2C, or 2D from appendix A of 40 CFR part 60, as appropriate.

(C) The average benzene concentration in the exhaust downstream of the combustion unit shall be determined using Method 18 from appendix A of 40 CFR part 60.

(iii) The mass of benzene emitted during each run shall be calculated as follows:

$$M_i = D_b VC\left(10^{-6}\right)$$

Where:

$M_i$ = Mass of benzene emitted during run i, kg (lb).

V = Volume of air-vapor mixture exhausted at standard conditions, $m^3$ ($ft^3$ ).

C = Concentration of benzene measured in the exhaust, ppmv.

$D_b$ = Density of benzene, 3.24 kg/$m^3$ (0.202 lb/$ft^3$ ).

$10^6$ = Conversion factor for ppmv.

(iv) The benzene mass emission rate in the exhaust shall be calculated as follows:

$$E_a = \left(\sum_{i=1}^{n} M_i\right) / T$$

Where:

$E_a$ = Mass flow rate of benzene emitted from the combustion unit, kg/hr (lb/hr).

$M_i$ = Mass of benzene emitted from the combustion unit during run i, kg (lb).

T = Total time of all runs, hr.

n = Number of runs.

(5) The benzene destruction efficiency for the combustion unit shall be calculated as follows:

$$R = \frac{E_b - E_a}{E_b} \times 100$$

Where:

R = Benzene destruction efficiency for the combustion unit, percent.

$E_b$ = Mass flow rate of benzene entering the combustion unit, kg/hr (lb/hr).

$E_a$ = Mass flow rate of benzene emitted from the combustion unit, kg/hr (lb/hr).

(g) An owner or operator using performance tests to demonstrate compliance of a wastewater treatment system unit with § 61.348(b) shall measure the flow-weighted annual average benzene concentration of the wastewater stream where the waste stream enters an exempt waste management unit by collecting and analyzing a minimum of three representative samples of the waste stream using the procedures in paragraph (c)(3) of this section. The test shall be conducted under conditions that exist when the wastewater treatment system is operating at the highest inlet wastewater stream flow rate and benzene content expected to occur. Operations during periods of startup, shutdown, and malfunction shall not constitute representative conditions for the purpose of a test. The owner or operator shall record all process information as is necessary to document the operating conditions during the test.

(h) An owner or operator shall test equipment for compliance with no detectable emissions as required in §§ 61.343 through 61.347, and § 61.349 of this subpart in accordance with the following requirements:

(1) Monitoring shall comply with Method 21 from appendix A of 40 CFR part 60.

(2) The detection instrument shall meet the performance criteria of Method 21.

(3) The instrument shall be calibrated before use on each day of its use by the procedures specified in Method 21.

(4) Calibration gases shall be:

(i) Zero air (less than 10 ppm of hydrocarbon in air); and

(ii) A mixture of methane or n-hexane and air at a concentration of approximately, but less than, 10,000 ppm methane or n-hexane.

(5) The background level shall be determined as set forth in Method 21.

(6) The instrument probe shall be traversed around all potential leak interfaces as close as possible to the interface as described in Method 21.

(7) The arithmetic difference between the maximum concentration indicated by the instrument and the background level is compared to 500 ppm for determining compliance.

(i) An owner or operator using a performance test to demonstrate compliance of a control device with either the organic reduction efficiency requirement or the benzene reduction efficiency requirement specified under § 61.349(a)(2) shall use the following procedures:

(1) The test shall be conducted under conditions that exist when the waste management unit vented to the control device is operating at the highest load or capacity level expected to occur. Operations during periods of startup, shutdown, and malfunction shall not constitute representative conditions for the purpose of a test. The owner or operator shall record all process information necessary to document the operating conditions during the test.

(2) Sampling sites shall be selected using Method 1 or 1A from appendix A of 40 CFR part 60, as appropriate.

(3) The mass flow rate of either the organics or benzene entering and exiting the control device shall be determined as follows:

(i) The time period for the test shall not be less than 3 hours during which at least 3 stack gas samples are collected. Samples of the vent stream entering and exiting the control device shall be collected during the same time period. Each sample shall be collected over a 1-hour period (e.g., in a tedlar bag) to represent a time-integrated composite sample.

(ii) A run shall consist of a 1-hour period during the test. For each run:

(A) The reading from each measurement shall be recorded;

(B) The volume exhausted shall be determined using Method 2, 2A, 2C, or 2D from appendix A of 40 CFR part 60, as appropriate;

(C) The organic concentration or the benzene concentration, as appropriate, in the vent stream entering and exiting the control shall be determined using Method 18 from appendix A of 40 CFR part 60.

(iii) The mass of organics or benzene entering and exiting the control device during each run shall be calculated as follows:

$$M_{aj} = \frac{K_1 V_{aj}}{10^6}\left(\sum_{i=1}^{n} C_{ai} MW_i\right) \quad M_{bj} = \frac{K_1 V_{bj}}{10^6}\left(\sum_{i=1}^{n} C_{bi} MW_i\right)$$

$M_{aj}$ = Mass of organics or benzene in the vent stream entering the control device during run j, kg (lb).

$M_{bj}$ = Mass of organics or benzene in the vent stream exiting the control device during run j, kg (lb).

$V_{aj}$ = Volume of vent stream entering the control device during run j, at standard conditions, $m^3$ ($ft^3$ ).

$V_{bj}$ = Volume of vent stream exiting the control device during run j, at standard conditions, $m^3$ ($ft^3$ ).

$C_{ai}$ = Organic concentration of compound i or the benzene concentration measured in the vent stream entering the control device as determined by Method 18, ppm by volume on a dry basis.

$C_{bi}$ = Organic concentration of compound i or the benzene concentration measured in the vent stream exiting the control device as determined by Method 18, ppm by volume on a dry basis.

$MW_i$ = Molecular weight of organic compound i in the vent stream, or the molecular weight of benzene, kg/kg-mol (lb/lb-mole).

n = Number of organic compounds in the vent stream; if benzene reduction efficiency is being demonstrated, then n=1.

$K_1$ = Conversion factor for molar volume at standard conditions (293 K and 760 mm Hg (527 R and 14.7 psia))

= 0.0416 kg-mol/$m^3$ (0.00118 lb-mol/$ft^3$ )

$10^{-6}$ =Conversion factor for ppmv.

(iv) The mass flow rate of organics or benzene entering and exiting the control device shall be calculated as follows:

$$E_a - \left(\sum_{j=1}^{n} M_{aj}\right) / T$$

$$E_b - \left(\sum_{j=1}^{n} M_{bj}\right) / T$$

Where:

$E_a$ = Mass flow rate of organics or benzene entering the control device, kg/hr (lb/hr).

$E_b$ = Mass flow rate of organics or benzene exiting the control device, kg/hr (lb/hr).

$M_{aj}$ = Mass of organics or benzene in the vent stream entering the control device during run j, kg (lb).

$M_{bj}$ = Mass of organics or benzene in the vent stream exiting the control device during run j, kg (lb).

T = Total time of all runs, hr.

n = Number of runs.

(4) The organic reduction efficiency or the benzene reduction efficiency for the control device shall be calculated as follows:

$$R = \frac{E_a - E_b}{E_a} \times 100$$

Where:

R = Total organic reduction of efficiency or benzene reduction efficiency for the control device, percent.

$E_b$ = Mass flow rate of organics or benzene entering the control device, kg/hr (lb/hr).

$E_a$ = Mass flow rate of organic or benzene emitted from the control device, kg/hr (lb/hr).

(j) An owner or operator shall determine the benzene quantity for the purposes of the calculation required by § 61.342 (c)(3)(ii)(B) according to the provisions of paragraph (a) of this section, except that the procedures in paragraph (a) of this section shall also apply to wastes with a water content of 10 percent or less.

(k) An owner or operator shall determine the benzene quantity for the purposes of the calculation required by § 61.342(e)(2) by the following procedure:

(1) For each waste stream that is not controlled for air emissions in accordance with § 61.343. 61.344, 61.345, 61.346, 61.347, or 61.348(a), as applicable to the waste management unit that manages the waste, the benzene quantity shall be determined as specified in paragraph (a) of this section, except that paragraph (b)(4) of this section shall not apply, i.e., the waste quantity for process unit turnaround waste is not annualized but shall be included in the

determination of benzene quantity for the year in which the waste is generated for the purposes of the calculation required by § 61.342(e)(2).

(2) For each waste stream that is controlled for air emissions in accordance with § 61.343. 61.344, 61.345, 61.346, 61.347, or 61.348(a), as applicable to the waste management unit that manages the waste, the determination of annual waste quantity and flow-weighted annual average benzene concentration shall be made at the first applicable location as described in paragraphs (k)(2)(i), (k)(2)(ii), and (k)(2)(iii) of this section and prior to any reduction of benzene concentration through volatilization of the benzene, using the methods given in (k)(2)(iv) and (k)(2)(v) of this section.

(i) Where the waste stream enters the first waste management unit not complying with §§ 61.343, 61.344, 61.345, 61.346, 61.347, and 61.348(a) that are applicable to the waste management unit,

(ii) For each waste stream that is managed or treated only in compliance with §§ 61.343 through 61.348(a) up to the point of final direct discharge from the facility, the determination of benzene quantity shall be prior to any reduction of benzene concentration through volatilization of the benzene, or

(iii) For wastes managed in units controlled for air emissions in accordance with §§ 61.343, 61.344, 61.345, 61.346, 61.347, and 61.348(a), and then transferred offsite, facilities shall use the first applicable offsite location as described in paragraphs (k)(2)(i) and (k)(2)(ii) of this section if they have documentation from the offsite facility of the benzene quantity at this location. Facilities without this documentation for offsite wastes shall use the benzene quantity determined at the point where the transferred waste leaves the facility.

(iv) Annual waste quantity shall be determined using the procedures in paragraphs (b)(5), (6), or (7) of this section, and

(v) The flow-weighted annual average benzene concentration shall be determined using the procedures in paragraphs (c)(2) or (3) of this section.

(3) The benzene quantity in a waste stream that is generated less than one time per year, including process unit turnaround waste, shall be included in the determination of benzene quantity as determined in paragraph (k)(6) of this section for the year in which the waste is generated. The benzene quantity in this waste stream shall not be annualized or averaged over the time interval between the activities that resulted in generation of the waste for purposes of determining benzene quantity as determined in paragraph (k)(6) of this section.

(4) The benzene in waste entering an enhanced biodegradation unit, as defined in § 61.348(b)(2)(ii)(B), shall not be included in the determination of benzene quantity, determined in paragraph (k)(6) of this section, if the following conditions are met:

(i) The benzene concentration for each waste stream entering the enhanced biodegradation unit is less than 10 ppmw on a flow-weighted annual average basis, and

(ii) All prior waste management units managing the waste comply with §§ 61.343, 61.344, 61.345, 61.346, 61.347 and 61.348(a).

(5) The benzene quantity for each waste stream in paragraph (k)(2) of this section shall be determined by multiplying the annual waste quantity of each waste stream times its flow-weighted annual average benzene concentration.

(6) The total benzene quantity for the purposes of the calculation required by § 61.342(e)(2) shall be determined by adding together the benzene quantities determined in paragraphs (k)(1) and (k)(5) of this section for each applicable waste stream.

(7) If the benzene quantity determined in paragraph (6) of this section exceeds 6.0 Mg/yr (6.6 ton/yr) only because of multiple counting of the benzene quantity for a waste stream, the owner or operator may use the following procedures for the purposes of the calculation required by § 61.342(e)(2):

(i) Determine which waste management units are involved in the multiple counting of benzene;

(ii) Determine the quantity of benzene that is emitted, recovered, or removed from the affected units identified in paragraph (k)(7)(i) of this section, or destroyed in the units if applicable, using either direct measurements or the best available estimation techniques developed or approved by the Administrator.

(iii) Adjust the benzene quantity to eliminate the multiple counting of benzene based on the results from paragraph (k)(7)(ii) of this section and determine the total benzene quantity for the purposes of the calculation required by § 61.342(e)(2).

(iv) Submit in the annual report required under § 61.357(a) a description of the methods used and the resulting calculations for the alternative procedure under paragraph (k)(7) of this section, the benzene quantity determination from paragraph (k)(6) of this section, and the adjusted benzene quantity determination from paragraph (k)(7)(iii) of this section.

[55 FR 8346, Mar. 7, 1990; 55 FR 12444, Apr. 3, 1990, as amended at 55 FR 37231, Sept. 10, 1990; 58 FR 3099, Jan. 7, 1993; 65 FR 62160, Oct. 17, 2000]

**§ 61.356 Recordkeeping requirements.**

(a) Each owner or operator of a facility subject to the provisions of this subpart shall comply with the recordkeeping requirements of this section. Each record shall be maintained in a readily accessible location at the facility site for a period not less than two years from the date the information is recorded unless otherwise specified.

(b) Each owner or operator shall maintain records that identify each waste stream at the facility subject to this subpart, and indicate whether or not the waste stream is controlled for benzene emissions in accordance with this subpart. In addition the owner or operator shall maintain the following records:

(1) For each waste stream not controlled for benzene emissions in accordance with this subpart, the records shall include all test results, measurements, calculations, and other documentation used to determine the following information for the waste stream: waste stream identification, water content, whether or not the waste stream is a process wastewater stream, annual waste quantity, range of benzene concentrations, annual average flow-weighted benzene concentration, and annual benzene quantity.

(2) For each waste stream exempt from § 61.342(c)(1) in accordance with § 61.342(c)(3), the records shall include:

(i) All measurements, calculations, and other documentation used to determine that the continuous flow of process wastewater is less than 0.02 liters (0.005 gallons) per minute or the annual waste quantity of process wastewater is less than 10 Mg/yr (11 ton/yr) in accordance with § 61.342(c)(3)(i), or

(ii) All measurements, calculations, and other documentation used to determine that the sum of the total annual benzene quantity in all exempt waste streams does not exceed 2.0 Mg/yr (2.2 ton/yr) in accordance with § 61.342(c)(3)(ii).

(3) For each facility where process wastewater streams are controlled for benzene emissions in accordance with § 61.342(d) of this subpart, the records shall include for each treated process wastewater stream all measurements, calculations, and other documentation used to determine the annual benzene quantity in the process wastewater stream exiting the treatment process.

(4) For each facility where waste streams are controlled for benzene emissions in accordance with § 61.342(e), the records shall include for each waste stream all measurements, including the locations of the measurements, calculations, and other documentation used to determine that the total benzene quantity does not exceed 6.0 Mg/yr (6.6 ton/yr).

(5) For each facility where the annual waste quantity for process unit turnaround waste is determined in accordance with § 61.355(b)(5), the records shall include all test results, measurements, calculations, and other documentation used to determine the following information: identification of each process unit at the facility that undergoes turnarounds, the date of the most recent turnaround for each process unit, identification of each process unit turnaround waste, the water content of each process unit turnaround waste, the annual waste quantity determined in accordance with § 61.355(b)(5), the range of benzene concentrations in the waste, the annual average flow-weighted

benzene concentration of the waste, and the annual benzene quantity calculated in accordance with § 61.355(a)(1)(iii) of this section.

(6) For each facility where wastewater streams are controlled for benzene emissions in accordance with § 61.348(b)(2), the records shall include all measurements, calculations, and other documentation used to determine the annual benzene content of the waste streams and the total annual benzene quantity contained in all waste streams managed or treated in exempt waste management units.

(c) An owner or operator transferring waste off-site to another facility for treatment in accordance with § 61.342(f) shall maintain documentation for each offsite waste shipment that includes the following information: Date waste is shipped offsite, quantity of waste shipped offsite, name and address of the facility receiving the waste, and a copy of the notice sent with the waste shipment.

(d) An owner or operator using control equipment in accordance with §§ 61.343 through 61.347 shall maintain engineering design documentation for all control equipment that is installed on the waste management unit. The documentation shall be retained for the life of the control equipment. If a control device is used, then the owner or operator shall maintain the control device records required by paragraph (f) of this section.

(e) An owner or operator using a treatment process or wastewater treatment system unit in accordance with § 61.348 of this subpart shall maintain the following records. The documentation shall be retained for the life of the unit.

(1) A statement signed and dated by the owner or operator certifying that the unit is designed to operate at the documented performance level when the waste stream entering the unit is at the highest waste stream flow rate and benzene content expected to occur.

(2) If engineering calculations are used to determine treatment process or wastewater treatment system unit performance, then the owner or operator shall maintain the complete design analysis for the unit. The design analysis shall include for example the following information: Design specifications, drawings, schematics, piping and instrumentation diagrams, and other documentation necessary to demonstrate the unit performance.

(3) If performance tests are used to determine treatment process or wastewater treatment system unit performance, then the owner or operator shall maintain all test information necessary to demonstrate the unit performance.

(i) A description of the unit including the following information: type of treatment process; manufacturer name and model number; and for each waste stream entering and exiting the unit, the waste stream type (e.g., process wastewater, sludge, slurry, etc.), and the design flow rate and benzene content.

(ii) Documentation describing the test protocol and the means by which sampling variability and analytical variability were accounted for in the determination of the unit performance. The description of the test protocol shall include the following information: sampling locations, sampling method, sampling frequency, and analytical procedures used for sample analysis.

(iii) Records of unit operating conditions during each test run including all key process parameters.

(iv) All test results.

(4) If a control device is used, then the owner or operator shall maintain the control device records required by paragraph (f) of this section.

(f) An owner or operator using a closed-vent system and control device in accordance with § 61.349 of this subpart shall maintain the following records. The documentation shall be retained for the life of the control device.

(1) A statement signed and dated by the owner or operator certifying that the closed-vent system and control device is designed to operate at the documented performance level when the waste management unit vented to the control device is or would be operating at the highest load or capacity expected to occur.

(2) If engineering calculations are used to determine control device performance in accordance with § 61.349(c), then a design analysis for the control device that includes for example:

(i) Specifications, drawings, schematics, and piping and instrumentation diagrams prepared by the owner or operator, or the control device manufacturer or vendor that describe the control device design based on acceptable engineering texts. The design analysis shall address the following vent stream characteristics and control device operating parameters:

(A) For a thermal vapor incinerator, the design analysis shall consider the vent stream composition, constituent concentrations, and flow rate. The design analysis shall also establish the design minimum and average temperature in the combustion zone and the combustion zone residence time.

(B) For a catalytic vapor incinerator, the design analysis shall consider the vent stream composition, constituent concentrations, and flow rate. The design analysis shall also establish the design minimum and average temperatures across the catalyst bed inlet and outlet.

(C) For a boiler or process heater, the design analysis shall consider the vent stream composition, constituent concentrations, and flow rate. The design analysis shall also establish the design minimum and average flame zone temperatures, combustion zone residence time, and description of method and location where the vent stream is introduced into the flame zone.

(D) For a flare, the design analysis shall consider the vent stream composition, constituent concentrations, and flow rate. The design analysis shall also consider the requirements specified in 40 CFR 60.18.

(E) For a condenser, the design analysis shall consider the vent stream composition, constituent concentration, flow rate, relative humidity, and temperature. The design analysis shall also establish the design outlet organic compound concentration level or the design outlet benzene concentration level, design average temperature of the condenser exhaust vent stream, and the design average temperatures of the coolant fluid at the condenser inlet and outlet.

(F) For a carbon adsorption system that regenerates the carbon bed directly on-site in the control device such as a fixed-bed adsorber, the design analysis shall consider the vent stream composition, constituent concentration, flow rate, relative humidity, and temperature. The design analysis shall also establish the design exhaust vent stream organic compound concentration level or the design exhaust vent stream benzene concentration level, number and capacity of carbon beds, type and working capacity of activated carbon used for carbon beds, design total steam flow over the period of each complete carbon bed regeneration cycle, duration of the carbon bed steaming and cooling/drying cycles, design carbon bed temperature after regeneration, design carbon bed regeneration time, and design service life of carbon.

(G) For a carbon adsorption system that does not regenerate the carbon bed directly on-site in the control device, such as a carbon canister, the design analysis shall consider the vent stream composition, constituent concentration, flow rate, relative humidity, and temperature. The design analysis shall also establish the design exhaust vent stream organic compound concentration level or the design exhaust vent stream benzene concentration level, capacity of carbon bed, type and working capacity of activated carbon used for carbon bed, and design carbon replacement interval based on the total carbon working capacity of the control device and source operating schedule.

(H) For a control device subject to the requirements of § 61.349(a)(2)(iv), the design analysis shall consider the vent stream composition, constituent concentration, and flow rate. The design analysis shall also include all of the information submitted under § 61.349 (a)(2)(iv).

(ii) [Reserved]

(3) If performance tests are used to determine control device performance in accordance with § 61.349(c) of this subpart:

(i) A description of how it is determined that the test is conducted when the waste management unit or treatment process is operating at the highest load or capacity level. This description shall include the estimated or design flow rate and organic content of each vent stream and definition of the acceptable operating ranges of key process and control parameters during the test program.

(ii) A description of the control device including the type of control device, control device manufacturer's name and model number, control device dimensions, capacity, and construction materials.

(iii) A detailed description of sampling and monitoring procedures, including sampling and monitoring locations in the system, the equipment to be used, sampling and monitoring frequency, and planned analytical procedures for sample analysis.

(iv) All test results.

(g) An owner or operator shall maintain a record for each visual inspection required by §§ 61.343 through 61.347 of this subpart that identifies a problem (such as a broken seal, gap or other problem) which could result in benzene emissions. The record shall include the date of the inspection, waste management unit and control equipment location where the problem is identified, a description of the problem, a description of the corrective action taken, and the date the corrective action was completed.

(h) An owner or operator shall maintain a record for each test of no detectable emissions required by §§ 61.343 through 61.347 and § 61.349 of this subpart. The record shall include the following information: date the test is performed, background level measured during test, and maximum concentration indicated by the instrument reading measured for each potential leak interface. If detectable emissions are measured at a leak interface, then the record shall also include the waste management unit, control equipment, and leak interface location where detectable emissions were measured, a description of the problem, a description of the corrective action taken, and the date the corrective action was completed.

(i) For each treatment process and wastewater treatment system unit operated to comply with § 61.348, the owner or operator shall maintain documentation that includes the following information regarding the unit operation:

(1) Dates of startup and shutdown of the unit.

(2) If measurements of waste stream benzene concentration are performed in accordance with § 61.354(a)(1) of this subpart, the owner or operator shall maintain records that include date each test is performed and all test results.

(3) If a process parameter is continuously monitored in accordance with § 61.354(a)(2) of this subpart, the owner or operator shall maintain records that include a description of the operating parameter (or parameters) to be monitored to ensure that the unit will be operated in conformance with these standards and the unit's design specifications, and an explanation of the criteria used for selection of that parameter (or parameters). This documentation shall be kept for the life of the unit.

(4) If measurements of waste stream benzene concentration are performed in accordance with § 61.354(b), the owner or operator shall maintain records that include the date each test is performed and all test results.

(5) Periods when the unit is not operated as designed.

(j) For each control device, the owner or operator shall maintain documentation that includes the following information regarding the control device operation:

(1) Dates of startup and shutdown of the closed-vent system and control device.

(2) A description of the operating parameter (or parameters) to be monitored to ensure that the control device will be operated in conformance with these standards and the control device's design specifications and an explanation of the criteria used for selection of that parameter (or parameters). This documentation shall be kept for the life of the control device.

(3) Periods when the closed-vent system and control device are not operated as designed including all periods and the duration when:

(i) Any valve car-seal or closure mechanism required under § 61.349(a)(1)(ii) is broken or the by-pass line valve position has changed.

(ii) The flow monitoring devices required under § 61.349(a)(1)(ii) indicate that vapors are not routed to the control device as required.

(4) If a thermal vapor incinerator is used, then the owner or operator shall maintain continuous records of the temperature of the gas stream in the combustion zone of the incinerator and records of all 3-hour periods of operation during which the average temperature of the gas stream in the combustion zone is more than 28 °C (50 °F) below the design combustion zone temperature.

(5) If a catalytic vapor incinerator is used, then the owner or operator shall maintain continuous records of the temperature of the gas stream both upstream and downstream of the catalyst bed of the incinerator, records of all 3-hour periods of operation during which the average temperature measured before the catalyst bed is more than 28 °C (50 °F) below the design gas stream temperature, and records of all 3-hour periods of operation during which the average temperature difference across the catalyst bed is less than 80 percent of the design temperature difference.

(6) If a boiler or process heater is used, then the owner or operator shall maintain records of each occurrence when there is a change in the location at which the vent stream is introduced into the flame zone as required by § 61.349(a)(2)(i)(C). For a boiler or process heater having a design heat input capacity less than 44 MW (150 × 106 BTU/hr), the owner or operator shall maintain continuous records of the temperature of the gas stream in the combustion zone of the boiler or process heater and records of all 3-hour periods of operation during which the average temperature of the gas stream in the combustion zone is more than 28 °C (50 °F) below the design combustion zone temperature. For a boiler or process heater having a design heat input capacity greater than or equal to 44 MW (150 × 106 BTU/hr), the owner or operator shall maintain continuous records of the parameter(s) monitored in accordance with the requirements of § 61.354(c)(5).

(7) If a flare is used, then the owner or operator shall maintain continuous records of the flare pilot flame monitoring and records of all periods during which the pilot flame is absent.

(8) If a condenser is used, then the owner or operator shall maintain records from the monitoring device of the parameters selected to be monitored in accordance with § 61.354(c)(6). If concentration of organics or concentration of benzene in the control device outlet gas stream is monitored, then the owner or operator shall record all 3-hour periods of operation during which the concentration of organics or the concentration of benzene in the exhaust stream is more than 20 percent greater than the design value. If the temperature of the condenser exhaust stream and coolant fluid is monitored, then the owner or operator shall record all 3-hour periods of operation during which the temperature of the condenser exhaust vent stream is more than 6 °C (11 °F) above the design average exhaust vent stream temperature, or the temperature of the coolant fluid exiting the condenser is more than 6 °C (11 °F) above the design average coolant fluid temperature at the condenser outlet.

(9) If a carbon adsorber is used, then the owner or operator shall maintain records from the monitoring device of the concentration of organics or the concentration of benzene in the control device outlet gas stream. If the concentration of organics or the concentration of benzene in the control device outlet gas stream is monitored, then the owner or operator shall record all 3-hour periods of operation during which the concentration of organics or the concentration of benzene in the exhaust stream is more than 20 percent greater than the design value. If the carbon bed regeneration interval is monitored, then the owner or operator shall record each occurrence when the vent stream continues to flow through the control device beyond the predetermined carbon bed regeneration time.

(10) If a carbon adsorber that is not regenerated directly on site in the control device is used, then the owner or operator shall maintain records of dates and times when the control device is monitored, when breakthrough is measured, and shall record the date and time then the existing carbon in the control device is replaced with fresh carbon.

(11) If an alternative operational or process parameter is monitored for a control device, as allowed in § 61.354(e) of this subpart, then the owner or operator shall maintain records of the continuously monitored parameter, including periods when the device is not operated as designed.

(12) If a control device subject to the requirements of § 61.349(a)(2)(iv) is used, then the owner or operator shall maintain records of the parameters that are monitored and each occurrence when the parameters monitored are outside the range of values specified in § 61.349(a)(2)(iv)(C), or other records as specified by the Administrator.

(k) An owner or operator who elects to install and operate the control equipment in § 61.351 of this subpart shall comply with the recordkeeping requirements in 40 CFR 60.115b.

(l) An owner or operator who elects to install and operate the control equipment in § 61.352 of this subpart shall maintain records of the following:

(1) The date, location, and corrective action for each visual inspection required by 40 CFR 60.693-2(a)(5), during which a broken seal, gap, or other problem is identified that could result in benzene emissions.

(2) Results of the seal gap measurements required by 40 CFR 60.693-2(a).

(m) If a system is used for emission control that is maintained at a pressure less than atmospheric pressure with openings to provide dilution air, then the owner or operator shall maintain records of the monitoring device and records of all periods during which the pressure in the unit is operated at a pressure that is equal to or greater than atmospheric pressure.

(n) Each owner or operator using a total enclosure to comply with control requirements for tanks in § 61.343 or the control requirements for containers in § 61.345 must keep the records required in paragraphs (n)(1) and (2) of this section. Owners or operators may use records as required in 40 CFR 264.1089(b)(2)(iv) or 40 CFR 265.1090(b)(2)(iv) for a tank or as required in 40 CFR 264.1089(d)(1) or 40 CFR 265.1090(d)(1) for a container to meet the recordkeeping requirement in paragraph (n)(1) of this section. The owner or operator must make the records of each verification of a total enclosure available for inspection upon request.

(1) Records of the most recent set of calculations and measurements performed to verify that the enclosure meets the criteria of a permanent total enclosure as specified in “Procedure T—Criteria for and Verification of a Permanent or Temporary Total Enclosure” in 40 CFR 52.741, appendix B;

(2) Records required for a closed-vent system and control device according to the requirements in paragraphs (d) (f), and (j) of this section.

[55 FR 8346, Mar. 7, 1990; 55 FR 12444, Apr. 3, 1990; 55 FR 18331, May 2, 1990, as amended at 58 FR 3103, Jan. 7, 1993; 65 FR 62161, Oct. 17, 2000; 67 FR 68533, Nov. 12, 2002]

**§ 61.357 Reporting requirements.**

(a) Each owner or operator of a chemical plant, petroleum refinery, coke by-product recovery plant, and any facility managing wastes from these industries shall submit to the Administrator within 90 days after January 7, 1993, or by the initial startup for a new source with an initial startup after the effective date, a report that summarizes the regulatory status of each waste stream subject to § 61.342 and is determined by the procedures specified in § 61.355(c) to contain benzene. Each owner or operator subject to this subpart who has no benzene onsite in wastes, products, by-products, or intermediates shall submit an initial report that is a statement to this effect. For all other owners or operators subject to this subpart, the report shall include the following information:

(1) Total annual benzene quantity from facility waste determined in accordance with § 61.355(a) of this subpart.

(2) A table identifying each waste stream and whether or not the waste stream will be controlled for benzene emissions in accordance with the requirements of this subpart.

(3) For each waste stream identified as not being controlled for benzene emissions in accordance with the requirements of this subpart the following information shall be added to the table:

(i) Whether or not the water content of the waste stream is greater than 10 percent;

(ii) Whether or not the waste stream is a process wastewater stream, product tank drawdown, or landfill leachate;

(iii) Annual waste quantity for the waste stream;

(iv) Range of benzene concentrations for the waste stream;

(v) Annual average flow-weighted benzene concentration for the waste stream; and

(vi) Annual benzene quantity for the waste stream.

(4) The information required in paragraphs (a) (1), (2), and (3) of this section should represent the waste stream characteristics based on current configuration and operating conditions. An owner or operator only needs to list in the report those waste streams that contact materials containing benzene. The report does not need to include a description of the controls to be installed to comply with the standard or other information required in § 61.10(a).

(b) If the total annual benzene quantity from facility waste is less than 1 Mg/yr (1.1 ton/yr), then the owner or operator shall submit to the Administrator a report that updates the information listed in paragraphs (a)(1) through (a)(3) of this section whenever there is a change in the process generating the waste stream that could cause the total annual benzene quantity from facility waste to increase to 1 Mg/yr (1.1 ton/yr) or more.

(c) If the total annual benzene quantity from facility waste is less than 10 Mg/yr (11 ton/yr) but is equal to or greater than 1 Mg/yr (1.1 ton/yr), then the owner or operator shall submit to the Administrator a report that updates the information listed in paragraphs (a)(1) through (a)(3) of this section. The report shall be submitted annually and whenever there is a change in the process generating the waste stream that could cause the total annual benzene quantity from facility waste to increase to 10 Mg/yr (11 ton/yr) or more. If the information in the annual report required by paragraphs (a)(1) through (a)(3) of this section is not changed in the following year, the owner or operator may submit a statement to that effect.

(d) If the total annual benzene quantity from facility waste is equal to or greater than 10 Mg/yr (11 ton/yr), then the owner or operator shall submit to the Administrator the following reports:

(1) Within 90 days after January 7, 1993, unless a waiver of compliance under § 61.11 of this part is granted, or by the date of initial startup for a new source with an initial startup after the effective date, a certification that the equipment necessary to comply with these standards has been installed and that the required initial inspections or tests have been carried out in accordance with this subpart. If a waiver of compliance is granted under § 61.11, the certification of equipment necessary to comply with these standards shall be submitted by the date the waiver of compliance expires.

(2) Beginning on the date that the equipment necessary to comply with these standards has been certified in accordance with paragraph (d)(1) of this section, the owner or operator shall submit annually to the Administrator a report that updates the information listed in paragraphs (a)(1) through (a)(3) of this section. If the information in the annual report required by paragraphs (a)(1) through (a)(3) of this section is not changed in the following year, the owner or operator may submit a statement to that effect.

(3) If an owner or operator elects to comply with the requirements of § 61.342(c)(3)(ii), then the report required by paragraph (d)(2) of this section shall include a table identifying each waste stream chosen for exemption and the total annual benzene quantity in these exempted streams.

(4) If an owner or operator elects to comply with the alternative requirements of § 61.342(d) of this subpart, then he shall include in the report required by paragraph (d)(2) of this section a table presenting the following information for each process wastewater stream:

(i) Whether or not the process wastewater stream is being controlled for benzene emissions in accordance with the requirements of this subpart;

(ii) For each process wastewater stream identified as not being controlled for benzene emissions in accordance with the requirements of this subpart, the table shall report the following information for the process wastewater stream as determined at the point of waste generation: annual waste quantity, range of benzene concentrations, annual average flow-weighted benzene concentration, and annual benzene quantity;

(iii) For each process wastewater stream identified as being controlled for benzene emissions in accordance with the requirements of this subpart, the table shall report the following information for the process wastewater stream as

determined at the exit to the treatment process: Annual waste quantity, range of benzene concentrations, annual average flow-weighted benzene concentration, and annual benzene quantity.

(5) If an owner or operator elects to comply with the alternative requirements of § 61.342(e), then the report required by paragraph (d)(2) of this section shall include a table presenting the following information for each waste stream:

(i) For each waste stream identified as not being controlled for benzene emissions in accordance with the requirements of this subpart; the table shall report the following information for the waste stream as determined at the point of waste generation: annual waste quantity, range of benzene concentrations, annual average flow-weighted benzene concentration, and annual benzene quantity;

(ii) For each waste stream identified as being controlled for benzene emissions in accordance with the requirements of this subpart; the table shall report the following information for the waste stream as determined at the applicable location described in § 61.355(k)(2): Annual waste quantity, range of benzene concentrations, annual average flow-weighted benzene concentration, and annual benzene quantity.

(6) Beginning 3 months after the date that the equipment necessary to comply with these standards has been certified in accordance with paragraph (d)(1) of this section, the owner or operator shall submit quarterly to the Administrator a certification that all of the required inspections have been carried out in accordance with the requirements of this subpart.

(7) Beginning 3 months after the date that the equipment necessary to comply with these standards has been certified in accordance with paragraph (d)(1) of this section, the owner or operator shall submit a report quarterly to the Administrator that includes:

(i) If a treatment process or wastewater treatment system unit is monitored in accordance with § 61.354(a)(1) of this subpart, then each period of operation during which the concentration of benzene in the monitored waste stream exiting the unit is equal to or greater than 10 ppmw.

(ii) If a treatment process or wastewater treatment system unit is monitored in accordance with § 61.354(a)(2) of this subpart, then each 3-hour period of operation during which the average value of the monitored parameter is outside the range of acceptable values or during which the unit is not operating as designed.

(iii) If a treatment process or wastewater treatment system unit is monitored in accordance with § 61.354(b), then each period of operation during which the flow-weighted annual average concentration of benzene in the monitored waste stream entering the unit is equal to or greater than 10 ppmw and/or the total annual benzene quantity is equal to or greater than 1.0 mg/yr.

(iv) For a control device monitored in accordance with § 61.354(c) of this subpart, each period of operation monitored during which any of the following conditions occur, as applicable to the control device:

(A) Each 3-hour period of operation during which the average temperature of the gas stream in the combustion zone of a thermal vapor incinerator, as measured by the temperature monitoring device, is more than 28 °C (50 °F) below the design combustion zone temperature.

(B) Each 3-hour period of operation during which the average temperature of the gas stream immediately before the catalyst bed of a catalytic vapor incinerator, as measured by the temperature monitoring device, is more than 28 °C (50 °F) below the design gas stream temperature, and any 3-hour period during which the average temperature difference across the catalyst bed (i.e., the difference between the temperatures of the gas stream immediately before and after the catalyst bed), as measured by the temperature monitoring device, is less than 80 percent of the design temperature difference.

(C) Each 3-hour period of operation during which the average temperature of the gas stream in the combustion zone of a boiler or process heater having a design heat input capacity less than 44 MW (150 × 106 BTU/hr), as mesured by the temperature monitoring device, is more than 28 °C (50 °F) below the design combustion zone temperature.

(D) Each 3-hour period of operation during which the average concentration of organics or the average concentration of benzene in the exhaust gases from a carbon adsorber, condenser, or other vapor recovery system is more than 20 percent greater than the design concentration level of organics or benzene in the exhaust gas.

(E) Each 3-hour period of operation during which the temperature of the condenser exhaust vent stream is more than 6 °C (11 °F) above the design average exhaust vent stream temperature, or the temperature of the coolant fluid exiting the condenser is more than 6 °C (11 °F) above the design average coolant fluid temperature at the condenser outlet.

(F) Each period in which the pilot flame of a flare is absent.

(G) Each occurrence when there is a change in the location at which the vent stream is introduced into the flame zone of a boiler or process heater as required by § 61.349(a)(2)(i)(C) of this subpart.

(H) Each occurrence when the carbon in a carbon adsorber system that is regenerated directly on site in the control device is not regenerated at the predetermined carbon bed regeneration time.

(I) Each occurrence when the carbon in a carbon adsorber system that is not regenerated directly on site in the control device is not replaced at the predetermined interval specified in § 61.354(c) of this subpart.

(J) Each 3-hour period of operation during which the parameters monitored are outside the range of values specified in § 61.349(a)(2)(iv)(C), or any other periods specified by the Administrator for a control device subject to the requirements of § 61.349(a)(2)(iv).

(v) For a cover and closed-vent system monitored in accordance with § 61.354(g), the owner or operator shall submit a report quarterly to the Administrator that identifies any period in which the pressure in the waste management unit is equal to or greater than atmospheric pressure.

(8) Beginning one year after the date that the equipment necessary to comply with these standards has been certified in accordance with paragraph (d)(1) of this section, the owner or operator shall submit annually to the Administrator a report that summarizes all inspections required by §§ 61.342 through 61.354 during which detectable emissions are measured or a problem (such as a broken seal, gap or other problem) that could result in benzone emissions is identified, including information about the repairs or corrective action taken.

(e) An owner or operator electing to comply with the provisions of §§ 61.351 or 61.352 of this subpart shall notify the Administrator of the alternative standard selected in the report required under § 61.07 or § 61.10 of this part.

(f) An owner or operator who elects to install and operate the control equipment in § 61.351 of this subpart shall comply with the reporting requirements in 40 CFR 60.115b.

(g) An owner or operator who elects to install and operate the control equipment in § 61.352 of this subpart shall submit initial and quarterly reports that identify all seal gap measurements, as required in 40 CFR 60.693-2(a), that are outside the prescribed limits.

[55 FR 8346, Mar. 7 1990; 55 FR 12444, Apr. 3, 1990, as amended at 55 FR 37231, Sept. 10, 1990; 58 FR 3105, Jan. 7, 1993; 65 FR 62161, Oct. 17, 2000]

**§ 61.358 Delegation of authority.**

(a) In delegating implementation and enforcement authority to a State under section 112(d) of the Clean Air Act, the authorities contained in paragraph (b) of this section shall be retained by the Administrator and not transferred to a State.

(b) Alternative means of emission limitation under § 61.353 of this subpart will not be delegated to States.

**§ 61.359 [Reserved]**

**Appendix A to Part 61**

APPENDIX A

National Emission Standards for Hazardous Air Pollutants

Compliance Status Information

I. SOURCE REPORT

INSTRUCTIONS: Owners or operators of sources of hazardous pollutants subject to the National Emission Standards for Hazardous Air Pollutants are required to submit the information contained in Section I to the appropriate U.S. Environmental Protection Agency Regional Office prior to 90 days after the effective date of any standards or amendments which require the submission of such information.

A list of regional offices is provided in §61.04.

A. SOURCE INFORMATION

1. Identification/Location - Indicate the name and address of each source.

1 2 Region; 3 4 State; 5 8 County; 9 13 Source Number; 0 0 0 14 16; 0 0 17 18; 1 19

20 22 AQCR #; 23 26 City Code; 27 Source Name 46

47 Street Address (Location of Plant) 66; 80

Dup 1-18 19; 20 City Name 34; State 35 39

55 58 NEDS X Ref.

40 State Regis. Number 54

59 SIC 62; FF 64; 8 A/P 65; 77 79 Staff; 80

Dup 1-18 5 19; CS 30; STP 31; EC 49; 80

2. Contact - Indicate the name and telephone number of the owner or operator or other responsible official whom EPA may contact concerning this report.

Dup 1-18 4 1 19 20; 21 Name 43

44 46 Area Code; 47 Number 54; 80

3. Source Description - Briefly state the nature of the source (e.g., "Chlor-alkali Plant" or "Machine Shop").

Dup 1-18 4 2 19 20; 21 Description 50

51 Continued 79; 80

4. Alternative Mailing Address - Indicate an alternative mailing address if correspondence is to be directed to a location different than that specified above.

Dup 1-18 4 3 19 20; 21 Number Street or Box Number 45; 80

Dup 1-18 4 4 19 20; 21 City 35; 37 38 State; 41 Zip 44; 80

5. Compliance Status - The emissions from this source ___ can ___ cannot meet the emission limitations contained in the National Emission Standards on or prior to 90 days after the effective date of any standards or amendments which require the submission of such information.

Signature of Owner, Operator or Other Responsible Official

NOTE: If the emissions from the source will exceed those limits set by the National Emission Standards for Hazardous Air Pollutants, the source will be in violation and subject to Federal enforcement actions unless granted a waiver of compliance by the Administrator of the U.S. Environmental Protection Agency. The information needed for such waivers is listed in Section II of this form.

B. PROCESS INFORMATION. Part B should be completed separately for each point of emission for each hazardous pollutant. [Sources subject to 61.22(1) may omit number 4. below.]

Dup 1-13 14 16; 0 0 17 18; 5 19; 20 SCC 27; 28 29 NEDS X Ref; 30 LS; 31 SIP

1. Pollutant Emitted - Indicate the type of hazardous pollutant emitted by the process. Indicate "AS" for asbestos, "BE" for beryllium, or "HG" for mercury.

32 33 Pollutant | 34 Regulation 48 | 49 EC

2. Process Description - Provide a brief description of each process (e.g., "hydrogen end box" in a mercury chlor-alkali plant, "grinding machine" in a beryllium machine shop). Use additional sheets if necessary.

50 Process Description 74 | 80

Dup 1-18 6 1 19 20 21 50

51 79 80

Dup 1-18 6 2 19 20 21 50

51 79 80

3. Amount of Pollutant - Indicate the average weight of the hazardous material named in Item 1 which enters the process in pounds per month (based on the previous twelve months of operation).

Dup 1-18 6 3 19 20 | 21 27 | lbs./mo. 29 36 | 80

4. Control Devices
a. Indicate the type of pollution control devices, if any, used to reduce the emissions from the process (e.g., venturi scrubber, baghouse, wet cyclone) and the estimated percent of the pollutant which the device removes from the process gas stream.

Dup 1-18 6 4 19 20 | PRIMARY CONTROL DEVICE: 21 43

45 Primary Device Name 64 | 66 70 Percent Removal Efficiency | 72 79

80

Dup 1-18 6 5 19 20 | SECONDARY CONTROL DEVICES: 21 45

47 Secondary Device Name 64 | 66 70 Percent Removal Efficiency | % EFFIC. 72 79 | 80

b. Asbestos Emission Control Devices Only
i. If a baghouse is specified in Item 4a, give the following information:

- The air flow permeability in cubic feet per minute per square foot of fabric area.

  Air flow permeability = _____ $cfm/ft^2$

- The pressure drop in inches water gauge across the filter at which the baghouse is operated.

  Operating pressure drop = _____ inches w.g.

- If the baghouse material contains synthetic fill yarn, check whether this material is / / spun / / or not spun.

- If the baghouse utilizes a felted fabric, give the minimum thickness in inches and the density in ounces per square yard.

  Thickness = _____ inches Density = _____ $oz/yd^2$

ii. If a wet collection device is specified in Item 4a, give the designed unit contacting energy in inches water gauge.

- Unit contacting energy = _____ inches w.g.

C. DISPOSAL OF ASBESTOS-CONTAINING WASTES. Part C should be completed separately for each asbestos-containing waste generation operation arising from sources subject to §61.22(a), (c), (e), and (h).

Dup 1-13 0 0 14 16 17 18 5 19 20 SCC 27 28 29 NEDS X Ref 30 CS 31 SIP

A B 32 33 Pollutant | 34 Regulation 48 | 49 EC

1. Waste Generation - Provide a brief description of each process that generates asbestos-containing waste (e.g. disposal of control device wastes).

50 Process Description 79 80

2. Asbestos Concentration - Indicate the average percentage asbestos content of these materials.

Dup 1-18 6 1 ASBESTOS CONCENTRATION:
19 20 21 43 45 48

%
50 80

3. Amount of Wastes - Indicate the average weight of asbestos-containing wastes disposed of, measured in kg/day.

Dup 1-18 6 2 kg/day
19 20 21 27 29 34 80

4. Control Methods - Indicate the emission control methods used in all stages of waste disposal, from collection, processing, and packaging to transporting and deposition.

Dup 1-18 6 3 Primary Control Method
19 20 21 43

45 79 80

Dup 1-18 6 4
19 20 21 50

51 79 80

5. Waste Disposal - Indicate the type of disposal site (sanitary landfill, open, covered) or incineration site (municipal, private) where the waste is disposed of and who operates the site (company, private, municipal). State the name and location of the site (closest city or town, county, state).

Dup 1-18 6 5 TYPE OF SITE:
19 20 21 33 35 50

51 79 80

Dup 1-18 6 6 OPERATOR:
19 20 21 29 31 50

51 79 80

Dup 1-18 6 7 LOCATION:
19 20 21 29

31 70

71 79 80

D. WASTE DISPOSAL SITES. Part D should be completed separately for each asbestos waste disposal site subject to section 61.22(1).

Dup 1-13 0 0 5
14 16 17 18 19 20 SCC 27 28 29 30 31
NEDS X Ref CS SIP

A B
32 33 34 Regulation 48 49
Pollutant EC

WASTE DISPOSAL SITE
50 68 80

1. Description - Provide a brief description of the site, including its size and configuration, and the distance to the closest city or town, closest residence, and closest primary road.

Dup 1-18 6 1 SITE DESCRIPTION
19 20 21 37 39 50

51 79 80

Dup 1-18 6 2 DISTANCE: TOWN: K M
19 20 21 29 30 34 36 40 42 43

RESIDENCE: K M ROAD:
45 54 56 60 62 63 65 69 71 75

K M
77 78 80

2. Inactivation - After the site is inactivated, indicate the method or methods used to comply with the standard and send a list of the actions that will be undertaken to maintain the inactivated site.

Dup 1-18 6 8 COMPLIANCE METHOD/INACTIVE SITE:
19 20 21 52

54 79 80

II. Waiver Requests

A. *Waiver of Compliance.* Owners or operators of sources unable to operate in compliance with the National Emission Standards for Hazardous Air Pollutants prior to 90 days after the effective date of any standards or amendments which require the submission of such information may request a waiver of compliance from the Administrator of the U.S. Environmental Protection Agency for the time period necessary to install appropriate control devices or make modifications to achieve compliance. The Administrator may grant a waiver of compliance with the standard for a period not exceeding two years from the effective date of the hazardous pollutant standards, if he finds that such period is necessary for the installation of controls and that steps will be taken during the period of the waiver to assure that the health of persons will be protected from imminent endangerment.

The report information provided in Section I must accompany this application. Applications should be sent to the appropriate EPA regional office.

1. *Processes Involved* —Indicate the process or processes emitting hazardous pollutants to which emission controls are to be applied.

2. *Controls*

a. Describe the proposed type of control device to be added or modification to be made to the process to reduce the emission of hazardous pollutants to an acceptable level. (Use additional sheets if necessary.)

b. Describe the measures that will be taken during the waiver period to assure that the health of persons will be protected from imminent endangerment. (Use additional sheets if necessary.)

3. *Increments of Progress* —Specify the dates by which the following increments of progress will be met.

Date by which contracts for emission control systems or process modifications will be awarded; or date by which orders will be issued for the purchase of the component parts to accomplish emission control or process modification.

Dup 1-16 0 1 7
17 19 53 54 55 60 61 MO/DY/YR 66 80

Date of initiation of on-site construction or installation of emission control equipment or process change.

Dup 1-16 0 2 7
17 19 53 54 55 60 61 MO/DY/YR 66 80

Date by which on-site construction or installation of emission control equipment or process modification is to be completed.

Dup 1-16 0 3 7
17 19 53 54 55 60 61 MO/DY/YR 66 80

Date by which final compliance is to be achieved.

Dup 1-16 0 4 7
17 19 53 54 55 60 61 MO/DY/YR 66 80

B. *Waiver of Emission Tests.* A waiver of emission testing may be granted to owners or operators of sources subject to emission testing if, in the judgment of the Administrator of the Environmental Protection Agency the emissions from the source comply with the appropriate standard or if the owners or operators of the source have requested a waiver of compliance or have been granted a waiver of compliance.

This application should accompany the report information provided in Section I.

1. *Reason* —State the reasons for requesting a waiver of emission testing. If the reason stated is that the emissions from the source are within the prescribed limits, documentation of this condition must be attached.

Date

Signature of the owner or operator

(Sec. 114, of the Clean Air Act as amended (42 U.S.C. 7414))

[40 FR 48303, Oct. 14, 1975, as amended at 43 FR 8800, Mar. 3, 1978; 50 FR 46295, Sept. 9, 1985]

**Appendix B to Part 61—Test Methods**

Method 101—Determination of particulate and gaseous mercury emissions from chlor-alkali plants (air streams)

Method 101A—Determination of particulate and gaseous mercury emissions from sewage sludge incinerators

Method 102—Determination of particulate and gaseous mercury emissions from chlor-alkali plants (hydrogen streams)

Method 103—Beryllium screening method

Method 104—Determination of beryllium emissions from stationary sources

Method 105—Determination of mercury in wastewater treatment plant sewage sludges

Method 106—Determination of vinyl chloride emissions from stationary sources

Method 107—Determination of vinyl chloride content of in-process wastewater samples, and vinyl chloride content of polyvinyl chloride resin slurry, wet cake, and latex samples

Method 107A—Determination of vinyl chloride content of solvents, resin-solvent solution, polyvinyl chloride resin, resin slurry, wet resin, and latex samples

Method 108—Determination of particulate and gaseous arsenic emissions

Method 108A—Determination of arsenic content in ore samples from nonferrous smelters

Method 108B—Determination of arsenic content in ore samples from nonferrous smelters

Method 108C—Determination of arsenic content in ore samples from nonferrous smelters (molybdenum blue photometric procedure)

Method 111—Determination of Polonium—210 emissions from stationary sources

**Method 101—Determination of Particulate and Gaseous Mercury Emissions From Chlor-Alkali Plants (Air Streams)**

NOTE: This method does not include all of the specifications ( *e.g.,* equipment and supplies) and procedures ( *e.g.,* sampling and analytical) essential to its performance. Some material is incorporated by reference from methods in appendix A to 40 CFR part 60. Therefore, to obtain reliable results, persons using this method should have a thorough knowledge of at least the following additional test methods: Method 1, Method 2, Method 3, and Method 5.

***1.0 Scope and Application***

1.1 Analytes.

| Analyte | CAS No. | Sensitivity |
|---|---|---|
| Mercury (Hg) | 7439-97-6 | Dependent upon recorder and spectrophotometer. |

1.2 Applicability. This method is applicable for the determination of Hg emissions, including both particulate and gaseous Hg, from chlor-alkali plants and other sources (as specified in the regulations) where the carrier-gas stream in the duct or stack is principally air.

1.3 Data Quality Objectives. Adherence to the requirements of this method will enhance the quality of the data obtained from air pollutant sampling methods.

*2.0 Summary of Method*

Particulate and gaseous Hg emissions are withdrawn isokinetically from the source and collected in acidic iodine monochloride (ICl) solution. The Hg collected (in the mercuric form) is reduced to elemental Hg, which is then aerated from the solution into an optical cell and measured by atomic absorption spectrophotometry.

*3.0 Definitions [Reserved]*

*4.0 Interferences*

4.1 Sample Collection. Sulfur dioxide ($SO_2$ ) reduces ICl and causes premature depletion of the ICl solution.

4.2 Sample Analysis.

4.2.1 ICl concentrations greater than $10^{-4}$ molar inhibit the reduction of the Hg (II) ion in the aeration cell.

4.2.2 Condensation of water vapor on the optical cell windows causes a positive interference.

*5.0 Safety*

5.1 Disclaimer. This method may involve hazardous materials, operations, and equipment. This test method does not purport to address all of the safety problems associated with its use. It is the responsibility of the user of this test method to establish appropriate safety and health practices and determine the applicability of regulatory limitations prior to performing this test method.

5.2 Corrosive Reagents. The following reagents are hazardous. Personal protective equipment and safe procedures are useful in preventing chemical splashes. If contact occurs, immediately flush with copious amounts of water for at least 15 minutes. Remove clothing under shower and decontaminate. Treat residual chemical burn as thermal burn.

5.2.1 Hydrochloric Acid (HCl). Highly toxic and corrosive. Causes severe damage to tissues. Vapors are highly irritating to eyes, skin, nose, and lungs, causing severe damage. May cause bronchitis, pneumonia, or edema of lungs. Exposure to concentrations of 0.13 to 0.2 percent can be lethal to humans in a few minutes. Provide ventilation to limit exposure. Reacts with metals, producing hydrogen gas.

5.2.2 Nitric Acid ($HNO_3$ ). Highly corrosive to eyes, skin, nose, and lungs. Vapors cause bronchitis, pneumonia, or edema of lungs. Reaction to inhalation may be delayed as long as 30 hours and still be fatal. Provide ventilation to limit exposure. Strong oxidizer. Hazardous reaction may occur with organic materials such as solvents.

5.2.3 Sulfuric Acid ($H_2 SO_4$ ). Rapidly destructive to body tissue. Will cause third degree burns. Eye damage may result in blindness. Inhalation may be fatal from spasm of the larynx, usually within 30 minutes. 3 $mg/m^3$ will cause lung damage. 1 $mg/m^3$ for 8 hours will cause lung damage or, in higher concentrations, death. Provide ventilation to limit inhalation. Reacts violently with metals and organics.

*6.0 Equipment and Supplies.*

6.1 Sample Collection. A schematic of the sampling train used in performing this method is shown in Figure 101-1; it is similar to the Method 5 sampling train. The following items are required for sample collection:

6.1.1 Probe Nozzle, Pitot Tube, Differential Pressure Gauge, Metering System, Barometer, and Gas Density Determination Equipment. Same as Method 5, Sections 6.1.1.1, 6.1.1.3, 6.1.1.4, 6.1.1.9, 6.1.2, and 6.1.3, respectively.

6.1.2 Probe Liner. Borosilicate or quartz glass tubing. A heating system capable of maintaining a gas temperature of 120 ±14 °C (248 ±25 °F) at the probe exit during sampling may be used to prevent water condensation.

NOTE: Do not use metal probe liners.

6.1.3 Impingers. Four Greenburg-Smith impingers connected in series with leak-free ground glass fittings or any similar leak-free noncontaminating fittings. For the first, third, and fourth impingers, impingers that are modified by replacing the tip with a 13-mm ID (0.5-in.) glass tube extending to 13 mm (0.5 in.) from the bottom of the flask may be used.

6.1.4 Acid Trap. Mine Safety Appliances air line filter, Catalog number 81857, with acid absorbing cartridge and suitable connections, or equivalent.

6.2 Sample Recovery. The following items are needed for sample recovery:

6.2.1 Glass Sample Bottles. Leakless, with Teflon-lined caps, 1000- and 100-ml.

6.2.2 Graduated Cylinder. 250-ml.

6.2.3 Funnel and Rubber Policeman. To aid in transfer of silica gel to container; not necessary if silica gel is weighed in the field.

6.2.4 Funnel. Glass, to aid in sample recovery.

6.3 Sample Preparation and Analysis. The following items are needed for sample preparation and analysis:

6.3.1 Atomic Absorption Spectrophotometer. Perkin-Elmer 303, or equivalent, containing a hollow-cathode mercury lamp and the optical cell described in Section 6.3.2.

6.3.2 Optical Cell. Cylindrical shape with quartz end windows and having the dimensions shown in Figure 101-2. Wind the cell with approximately 2 meters (6 ft) of 24-gauge Nichrome wire, or equivalent, and wrap with fiberglass insulation tape, or equivalent; do not let the wires touch each other.

6.3.3 Aeration Cell. Constructed according to the specifications in Figure 101-3. Do not use a glass frit as a substitute for the blown glass bubbler tip shown in Figure 101-3.

6.3.4 Recorder. Matched to output of the spectrophotometer described in Section 6.3.1.

6.3.5 Variable Transformer. To vary the voltage on the optical cell from 0 to 40 volts.

6.3.6 Hood. For venting optical cell exhaust.

6.3.7 Flow Metering Valve.

6.3.8 Rate Meter. Rotameter, or equivalent, capable of measuring to within 2 percent a gas flow of 1.5 liters/min (0.053 cfm).

6.3.9 Aeration Gas Cylinder. Nitrogen or dry, Hg-free air, equipped with a single-stage regulator.

6.3.10 Tubing. For making connections. Use glass tubing (ungreased ball and socket connections are recommended) for all tubing connections between the solution cell and the optical cell; do not use Tygon tubing, other types of flexible tubing, or metal tubing as substitutes. Teflon, steel, or copper tubing may be used between the nitrogen tank and flow metering valve (Section 6.3.7), and Tygon, gum, or rubber tubing between the flow metering valve and the aeration cell.

6.3.11 Flow Rate Calibration Equipment. Bubble flow meter or wet-test meter for measuring a gas flow rate of 1.5 ±0.1 liters/min (0.053 ±0.0035 cfm).

6.3.12 Volumetric Flasks. Class A with penny head standard taper stoppers; 100-, 250-, 500-, and 1000-ml.

6.3.13 Volumetric Pipets. Class A; 1-, 2-, 3-, 4-, and 5-ml.

6.3.14 Graduated Cylinder. 50-ml.

6.3.15 Magnetic Stirrer. General-purpose laboratory type.

6.3.16 Magnetic Stirring Bar. Teflon-coated.

6.3.17 Balance. Capable of weighing to ±0.5 g.

6.3.18 Alternative Analytical Apparatus. Alternative systems are allowable as long as they meet the following criteria:

6.3.18.1 A linear calibration curve is generated and two consecutive samples of the same aliquot size and concentration agree within 3 percent of their average.

6.3.18.2 A minimum of 95 percent of the spike is recovered when an aliquot of a source sample is spiked with a known concentration of Hg (II) compound.

6.3.18.3 The reducing agent should be added after the aeration cell is closed.

6.3.18.4 The aeration bottle bubbler should not contain a frit.

6.3.18.5 Any Tygon tubing used should be as short as possible and conditioned prior to use until blanks and standards yield linear and reproducible results.

6.3.18.6 If manual stirring is done before aeration, it should be done with the aeration cell closed.

6.3.18.7 A drying tube should not be used unless it is conditioned as the Tygon tubing above.

## *7.0 Reagents and Standards*

Unless otherwise indicated, all reagents must conform to the specifications established by the Committee on Analytical Reagents of the American Chemical Society; where such specifications are not available, use the best available grade.

7.1 Sample Collection. The following reagents are required for sample collection:

7.1.1 Water. Deionized distilled, to conform to ASTM D 1193-77 or 91 (incorporated by reference—see § 61.18), Type 1. If high concentrations of organic matter are not expected to be present, the analyst may eliminate the $KMnO_4$ test for oxidizable organic matter. Use this water in all dilutions and solution preparations.

7.1.2 Nitric Acid, 50 Percent (v/v). Mix equal volumes of concentrated $HNO_3$ and water, being careful to add the acid to the water slowly.

7.1.3 Silica Gel. Indicating type, 6- to 16-mesh. If previously used, dry at 175 °C (350 °F) for 2 hours. The tester may use new silica gel as received.

7.1.4 Potassium Iodide (KI) Solution, 25 Percent. Dissolve 250 g of KI in water, and dilute to 1 liter.

7.1.5 Iodine Monochloride Stock Solution, 1.0 M. To 800 ml of 25 percent KI solution, add 800 ml of concentrated HCl. Cool to room temperature. With vigorous stirring, slowly add 135 g of potassium iodate ($KIO_3$ ), and stir until all free iodine has dissolved. A clear orange-red solution occurs when all the $KIO_3$ has been added. Cool to room temperature, and dilute to 1800 ml with water. Keep the solution in amber glass bottles to prevent degradation.

7.1.6 Absorbing Solution, 0.1 M ICl. Dilute 100 ml of the 1.0 M ICl stock solution to 1 liter with water. Keep the solution in amber glass bottles and in darkness to prevent degradation. This reagent is stable for at least two months.

7.2 Sample Preparation and Analysis. The following reagents and standards are required for sample preparation and analysis:

7.2.1 Reagents.

7.2.1.1 Tin (II) Solution. Prepare fresh daily, and keep sealed when not being used. Completely dissolve 20 g of tin (II) chloride (or 25 g of tin (II) sulfate) crystals (Baker Analyzed reagent grade or any other brand that will give a clear solution) in 25 ml of concentrated HCl. Dilute to 250 ml with water. Do not substitute $HNO_3$ , $H_2SO_4$ , or other strong acids for the HCl.

7.2.1.2 Sulfuric Acid, 5 Percent (v/v). Dilute 25 ml of concentrated $H_2SO_4$ to 500 ml with water.

7.2.2 Standards

7.2.2.1 Hg Stock Solution, 1 mg Hg/ml. Prepare and store all Hg standard solutions in borosilicate glass containers. Completely dissolve 0.1354 g of Hg (II) chloride in 75 ml of water in a 100-ml glass volumetric flask. Add 10 ml of concentrated $HNO_3$ , and adjust the volume to exactly 100 ml with water. Mix thoroughly. This solution is stable for at least one month.

7.2.2.2 Intermediate Hg Standard Solution, 10 µg Hg/ml. Prepare fresh weekly. Pipet 5.0 ml of the Hg stock solution (Section 7.2.2.1) into a 500-ml glass volumetric flask, and add 20 ml of the 5 percent $H_2SO_4$ solution. Dilute to exactly 500 ml with water. Thoroughly mix the solution.

7.2.2.3 Working Hg Standard Solution, 200 ng Hg/ml. Prepare fresh daily. Pipet 5.0 ml of the intermediate Hg standard solution (Section 7.2.2.2) into a 250-ml volumetric glass flask. Add 10 ml of the 5 percent $H_2SO_4$ and 2 ml of the 0.1 M ICl absorbing solution taken as a blank (Section 8.7.4.3), and dilute to 250 ml with water. Mix thoroughly.

## *8.0 Sample Collection, Preservation, Transport, and Storage*

Because of the complexity of this method, testers should be trained and experienced with the test procedures to ensure reliable results. Since the amount of Hg that is collected generally is small, the method must be carefully applied to prevent contamination or loss of sample.

8.1 Pretest Preparation. Follow the general procedure outlined in Method 5, Section 8.1, except omit Sections 8.1.2 and 8.1.3.

8.2 Preliminary Determinations. Follow the general procedure outlined in Method 5, Section 8.2, with the exception of the following:

8.2.1 Select a nozzle size based on the range of velocity heads to assure that it is not necessary to change the nozzle size in order to maintain isokinetic sampling rates below 28 liters/min (1.0 cfm).

8.2.2 Perform test runs such that samples are obtained over a period or periods that accurately determine the maximum emissions that occur in a 24-hour period. In the case of cyclic operations, run sufficient tests for the accurate determination of the emissions that occur over the duration of the cycle. A minimum sample time of 2 hours is recommended. In some instances, high Hg or high $SO_2$ concentrations make it impossible to sample for the desired minimum time. This is indicated by reddening (liberation of free iodine) in the first impinger. In these cases, the sample run may be divided into two or more subruns to ensure that the absorbing solution is not depleted.

8.3 Preparation of Sampling Train.

8.3.1 Clean all glassware (probe, impingers, and connectors) by rinsing with 50 percent $HNO_3$ , tap water, 0.1 M ICl, tap water, and finally deionized distilled water. Place 100 ml of 0.1 M ICl in each of the first three impingers. Take care to prevent the absorbing solution from contacting any greased surfaces. Place approximately 200 g of preweighed silica gel in the fourth impinger. More silica gel may be used, but care should be taken to ensure that it is not entrained and carried out from the impinger during sampling. Place the silica gel container in a clean place for later use in the sample recovery. Alternatively, determine and record the weight of the silica gel plus impinger to the nearest 0.5 g.

8.3.2 Install the selected nozzle using a Viton A O-ring when stack temperatures are less than 260 °C (500 °F). Use a fiberglass string gasket if temperatures are higher. See APTD-0576 (Reference 3 in Method 5) for details. Other connecting systems using either 316 stainless steel or Teflon ferrules may be used. Mark the probe with heat-resistant tape or by some other method to denote the proper distance into the stack or duct for each sampling point.

8.3.3 Assemble the train as shown in Figure 101-1, using (if necessary) a very light coat of silicone grease on all ground glass joints. Grease only the outer portion (see APTD-0576) to avoid the possibility of contamination by the silicone grease.

NOTE: An empty impinger may be inserted between the third impinger and the silica gel to remove excess moisture from the sample stream.

8.3.4 After the sampling train has been assembled, turn on and set the probe heating system, if applicable, at the desired operating temperature. Allow time for the temperatures to stabilize. Place crushed ice around the impingers.

8.4 Leak-Check Procedures. Follow the leak-check procedures outlined in Method 5, Section 8.4.

8.5 Sampling Train Operation. Follow the general procedure outlined in Method 5, Section 8.5. For each run, record the data required on a data sheet such as the one shown in Figure 101-4.

8.6 Calculation of Percent Isokinetic. Same as Method 5, Section 8.6.

8.7 Sample Recovery. Begin proper cleanup procedure as soon as the probe is removed from the stack at the end of the sampling period.

8.7.1 Allow the probe to cool. When it can be safely handled, wipe off any external particulate matter near the tip of the probe nozzle, and place a cap over it. Do not cap off the probe tip tightly while the sampling train is cooling. Capping would create a vacuum and draw liquid out from the impingers.

8.7.2 Before moving the sampling train to the cleanup site, remove the probe from the train, wipe off the silicone grease, and cap the open outlet of the probe. Be careful not to lose any condensate that might be present. Wipe off the silicone grease from the impinger. Use either ground-glass stoppers, plastic caps, or serum caps to close these openings.

8.7.3 Transfer the probe and impinger assembly to a cleanup area that is clean, protected from the wind, and free of Hg contamination. The ambient air in laboratories located in the immediate vicinity of Hg-using facilities is not normally free of Hg contamination.

8.7.4 Inspect the train before and during disassembly, and note any abnormal conditions. Treat the samples as follows.

8.7.4.1 Container No. 1 (Impingers and Probe).

8.7.4.1.1 Using a graduated cylinder, measure the liquid in the first three impingers to within 1 ml. Record the volume of liquid present ( *e.g.,* see Figure 5-6 of Method 5). This information is needed to calculate the moisture content of the effluent gas. (Use only glass storage bottles and graduated cylinders that have been precleaned as in Section 8.3.1) Place the contents of the first three impingers into a 1000-ml glass sample bottle.

8.7.4.1.2 Taking care that dust on the outside of the probe or other exterior surfaces does not get into the sample, quantitatively recover the Hg (and any condensate) from the probe nozzle, probe fitting, and probe liner as follows: Rinse these components with two 50-ml portions of 0.1 M ICl. Next, rinse the probe nozzle, fitting and liner, and each piece of connecting glassware between the probe liner and the back half of the third impinger with a maximum of 400 ml of water. Add all washings to the 1000-ml glass sample bottle containing the liquid from the first three impingers.

8.7.4.1.3 After all washings have been collected in the sample container, tighten the lid on the container to prevent leakage during shipment to the laboratory. Mark the height of the liquid to determine later whether leakage occurred during transport. Label the container to identify clearly its contents.

8.7.4.2 Container No. 2 (Silica Gel). Same as Method 5, Section 8.7.6.3.

8.7.4.3 Container No. 3 (Absorbing Solution Blank). Place 50 ml of the 0.1 M ICl absorbing solution in a 100-ml sample bottle. Seal the container. Use this blank to prepare the working Hg standard solution (Section 7.2.2.3).

## *9.0 Quality Control*

9.1 Miscellaneous Quality Control Measures.

| Section | Quality control measure | Effect |
|---|---|---|
| 8.4 10.2 | Sampling equipment leak-checks and calibration | Ensure accuracy and precision of sampling measurements. |
| 10.5, 10.6 | Spectrophotometer calibration | Ensure linearity of spectrophotometer response to standards. |
| 11.3.3 | Check for matrix effects | Eliminate matrix effects. |

9.2 Volume Metering System Checks. Same as Method 5, Section 9.2.

## *10.0 Calibration and Standardizations*

NOTE: Maintain a laboratory log of all calibrations.

10.1 Before use, clean all glassware, both new and used, as follows: brush with soap and tap water, liberally rinse with tap water, soak for 1 hour in 50 percent $HNO_3$ , and then rinse with deionized distilled water.

10.2 Sampling Equipment. Calibrate the sampling equipment according to the procedures outlined in the following sections of Method 5: Section 10.1 (Probe Nozzle), Section 10.2 (Pitot Tube Assembly), Section 10.3 (Metering System), Section 10.5 (Temperature Sensors), Section 10.6 (Barometer).

10.3 Aeration System Flow Rate Meter. Assemble the aeration system as shown in Figure 101-5. Set the outlet pressure on the aeration gas cylinder regulator to a minimum pressure of 500 mm Hg (10 psi), and use the flow metering valve and a bubble flowmeter or wet-test meter to obtain a flow rate of 1.5 ±0.1 liters/min (0.053 ±0.0035 cfm) through the aeration cell. After the calibration of the aeration system flow rate meter is complete, remove the bubble flowmeter from the system.

10.4 Optical Cell Heating System. Using a 50-ml graduated cylinder, add 50 ml of water to the bottle section of the aeration cell, and attach the bottle section to the bubbler section of the cell. Attach the aeration cell to the optical cell and while aerating at 1.5 ±0.1 liters/min (0.053 ±0.0035 cfm), determine the minimum variable transformer setting necessary to prevent condensation of moisture in the optical cell and in the connecting tubing. (This setting should not exceed 20 volts.)

10.5 Spectrophotometer and Recorder.

10.5.1 The Hg response may be measured by either peak height or peak area.

NOTE: The temperature of the solution affects the rate at which elemental Hg is released from a solution and, consequently, it affects the shape of the absorption curve (area) and the point of maximum absorbance (peak height). Therefore, to obtain reproducible results, bring all solutions to room temperature before use.

10.5.2 Set the spectrophotometer wavelength at 253.7 nm, and make certain the optical cell is at the minimum temperature that will prevent water condensation. Then set the recorder scale as follows: Using a 50-ml graduated cylinder, add 50 ml of water to the aeration cell bottle. Add three drops of Antifoam B to the bottle, and then pipet 5.0 ml of the working Hg standard solution into the aeration cell.

NOTE: Always add the Hg-containing solution to the aeration cell after the 50 ml of water.

10.5.3 Place a Teflon-coated stirring bar in the bottle. Before attaching the bottle section to the bubbler section of the aeration cell, make certain that (1) the aeration cell exit arm stopcock (Figure 101-3) is closed (so that Hg will not prematurely enter the optical cell when the reducing agent is being added) and (2) there is no flow through the bubbler. If conditions (1) and (2) are met, attach the bottle section to the bubbler section of the aeration cell. Pipet 5 ml of tin (II) reducing solution into the aeration cell through the side arm, and immediately stopper the side arm. Stir the solution for 15 seconds, turn on the recorder, open the aeration cell exit arm stopcock, and immediately initiate aeration with continued stirring. Determine the maximum absorbance of the standard, and set this value to read 90 percent of the recorder full scale.

10.6 Calibration Curve.

10.6.1 After setting the recorder scale, repeat the procedure in Section 10.5 using 0.0-, 1.0-, 2.0-, 3.0-, 4.0-, and 5.0-ml aliquots of the working standard solution (final amount of Hg in the aeration cell is 0, 200, 400, 600, 800, and 1000 ng, respectively). Repeat this procedure on each aliquot size until two consecutive peaks agree within 3 percent of their average value.

NOTE: To prevent Hg carryover from one sample to another, do not close the aeration cell from the optical cell until the recorder pen has returned to the baseline.)

10.6.2 It should not be necessary to disconnect the aeration gas inlet line from the aeration cell when changing samples. After separating the bottle and bubbler sections of the aeration cell, place the bubbler section into a 600-ml beaker containing approximately 400 ml of water. Rinse the bottle section of the aeration cell with a stream of water to remove all traces of the tin (II) reducing agent. Also, to prevent the loss of Hg before aeration, remove all traces of the reducing agent between samples by washing with water. It will be necessary, however, to wash the aeration cell parts with concentrated HCl if any of the following conditions occur: (1) A white film appears on any inside surface of the aeration cell, (2) the calibration curve changes suddenly, or (3) the replicate samples do not yield reproducible results.

10.6.3 Subtract the average peak height (or peak area) of the blank (0.0-ml aliquot)—which must be less than 2 percent of recorder full scale—from the averaged peak heights of the 1.0-, 2.0-, 3.0-, 4.0-, and 5.0-ml aliquot standards. If the blank absorbance is greater than 2 percent of full-scale, the probable cause is Hg contamination of a reagent or carry-over of Hg from a previous sample. Prepare the calibration curve by plotting the corrected peak height of each standard solution versus the corresponding final total Hg weight in the aeration cell (in ng), and draw the best fit straight line. This line should either pass through the origin or pass through a point no further from the origin than ±2 percent of the recorder full scale. If the line does not pass through or very near to the origin, check for nonlinearity of the curve and for incorrectly prepared standards.

### *11.0 Analytical Procedure*

11.1 Sample Loss Check. Check the liquid level in each container to see whether liquid was lost during transport. If a noticeable amount of leakage occurred, either void the sample or use methods subject to the approval of the Administrator to account for the losses.

11.2 Sample Preparation. Treat each sample as follows:

11.2.1 Container No. 1 (Impingers and Probe). Carefully transfer the contents of Container No. 1 into a 1000-ml volumetric flask, and adjust the volume to exactly 1000 ml with water.

11.2.2 Dilutions. Pipet a 2-ml aliquot from the diluted sample from Section 11.2.1 into a 250-ml volumetric flask. Add 10 ml of 5 percent $H_2SO_4$, and adjust the volume to exactly 250 ml with water. This solution is stable for at least 72 hours.

NOTE: The dilution factor will be 250/2 for this solution.

11.3 Analysis. Calibrate the analytical equipment and develop a calibration curve as outlined in Sections 10.3 through 10.6.

11.3.1 Mercury Samples. Repeat the procedure used to establish the calibration curve with an appropriately sized aliquot (1 to 5 ml) of the diluted sample (from Section 11.2.2) until two consecutive peak heights agree within 3 percent of their average value. The peak maximum of an aliquot (except the 5-ml aliquot) must be greater than 10 percent of the recorder full scale. If the peak maximum of a 1.0-ml aliquot is off scale on the recorder, further dilute the original source sample to bring the Hg concentration into the calibration range of the spectrophotometer.

11.3.2 Run a blank and standard at least after every five samples to check the spectrophotometer calibration. The peak height of the blank must pass through a point no further from the origin than ±2 percent of the recorder full scale. The difference between the measured concentration of the standard (the product of the corrected peak height and the reciprocal of the least squares slope) and the actual concentration of the standard must be less than 7 percent, or recalibration of the analyzer is required.

11.3.3 Check for Matrix Effects (optional). Use the Method of Standard Additions as follows to check at least one sample from each source for matrix effects on the Hg results. The Method of Standard Additions procedures described on pages 9-4 and 9-5 of the section entitled “General Information” of the Perkin Elmer Corporation Atomic Absorption Spectrophotometry Manual, Number 303-0152 (Reference 16 in Section 16.0) are recommended. If the results of the Method of Standard Additions procedure used on the single source sample do not agree to within ±5 percent of the value obtained by the routine atomic absorption analysis, then reanalyze all samples from the source using the Method of Standard Additions procedure.

11.4 Container No. 2 (Silica Gel). Weigh the spent silica gel (or silica gel plus impinger) to the nearest 0.5 g using a balance. (This step may be conducted in the field.)

### *12.0 Data Analysis and Calculations*

Carry out calculations, retaining at least one extra decimal significant figure beyond that of the acquired data. Round off figures only after the final calculation. Other forms of the equations may be used as long as they give equivalent results.

12.1 Average Dry Gas Meter Temperature and Average Orifice Pressure Drop, Dry Gas Volume, Volume of Water Vapor Condensed, Moisture Content, and Isokinetic Variation. Same as Method 5, Sections 12.2 through 12.5 and 12.11, respectively.

12.2 Stack Gas Velocity. Using the data from this test and Equation 2-9 of Method 2, calculate the average stack gas velocity $v_s$ .

12.3 Total Mercury.

12.3.1 For each source sample, correct the average maximum absorbance of the two consecutive samples whose peak heights agree within 3 percent of their average for the contribution of the solution blank (see Section 10.6.3). Use the calibration curve and these corrected averages to determine the final total weight of Hg in ng in the aeration cell for each source sample.

12.3.2 Correct for any dilutions made to bring the sample into the working range of the spectrophotometer. Then calculate the Hg in the original solution, $m_{Hg}$ , as follows:

$$m_{Hg} = \left[C_{Hg(AC)}\left(DF\right)\left(V_f\right)\left(10^{-3}\right)\right]/S \qquad \text{Eq. 101-1}$$

Where:

$C_{Hg(AC)}$ = Total ng of Hg in aliquot analyzed (reagent blank subtracted).

DF = Dilution factor for the Hg-containing solution (before adding to the aeration cell; *e.g.,* DF = 250/2 if the source samples were diluted as described in Section 11.2.2).

$V_f$ = Solution volume of original sample, 1000 ml for samples diluted as described in Section 11.2.1.

$10^{-3}$ = Conversion factor, µg/ng.

S = Aliquot volume added to aeration cell, ml.

12.4 Mercury Emission Rate. Calculate the daily Hg emission rate, R, using Equation 101-2. For continuous operations, the operating time is equal to 86,400 seconds per day. For cyclic operations, use only the time per day each stack is in operation. The total Hg emission rate from a source will be the summation of results from all stacks.

$$R = \frac{K m_{Hg} V_s A_s \left(86{,}400 \times 10^{-6}\right)}{\left[V_{m(std)} + V_{w(std)}\right]\left(T_s / P_s\right)} \qquad \text{Eq. 101-2}$$

Where:

$K_1$ = 0.3858 °K/mm Hg for metric units.

$K_1$ = 17.64 °R/in. Hg for English units.

$K_3$ = $10^{-6}$ g/µg for metric units.

= 2.2046 “ × $10^{-9}$ lb/µg for English units.

$P_s$ = Absolute stack gas pressure, mm Hg (in. Hg).

t = Daily operating time, sec/day.

$T_s$ = Absolute average stack gas temperature, °K (°R).

$V_{m(std)}$ = Dry gas sample volume at standard conditions, scm (scf).

$V_{w(std)}$ = Volume of water vapor at standard conditions, scm (scf).

12.5 Determination of Compliance. Each performance test consists of three repetitions of the applicable test method. For the purpose of determining compliance with an applicable national emission standard, use the average of the results of all repetitions.

## *13.0 Method Performance*

The following estimates are based on collaborative tests, wherein 13 laboratories performed duplicate analyses on two Hg-containing samples from a chlor-alkali plant and on one laboratory-prepared sample of known Hg concentration. The sample concentrations ranged from 2 to 65 µg Hg/ml.

13.1 Precision. The estimated intra-laboratory and inter-laboratory standard deviations are 1.6 and 1.8 µg Hg/ml, respectively.

13.2 Accuracy. The participating laboratories that analyzed a 64.3 µg Hg/ml (in 0.1 M ICl) standard obtained a mean of 63.7 µg Hg/ml.

13.3 Analytical Range. After initial dilution, the range of this method is 0.5 to 120 µg Hg/ml. The upper limit can be extended by further dilution of the sample.

## *14.0 Pollution Prevention. [Reserved]*

## *15.0 Waste Management. [Reserved]*

## *16.0 References*

Same as Method 5, Section 17.0, References 1-3, 5, and 6, with the addition of the following:

1. Determining Dust Concentration in a Gas Stream. ASME Performance Test Code No. 27. New York, NY. 1957.

2. DeVorkin, Howard, *et al.* Air Pollution Source Testing Manual. Air Pollution Control District. Los Angeles, CA. November 1963.

3. Hatch, W.R., and W.I. Ott. Determination of Sub-Microgram Quantities of Mercury by Atomic Absorption Spectrophotometry. Anal. Chem. 40:2085-87. 1968.

4. Mark, L.S. Mechanical Engineers' Handbook. McGraw-Hill Book Co., Inc. New York, NY. 1951.

5. Western Precipitation Division of Joy Manufacturing Co. Methods for Determination of Velocity, Volume, Dust and Mist Content of Gases. Bulletin WP-50. Los Angeles, CA. 1968.

6. Perry, J.H. Chemical Engineers' Handbook. McGraw-Hill Book Co., Inc. New York, NY. 1960.

7. Shigehara, R.T., W.F. Todd, and W.S. Smith. Significance of Errors in Stack Sampling Measurements. Stack Sampling News. *1* (3):6-18. September 1973.

8. Smith, W.S., R.T. Shigehara, and W.F. Todd. A Method of Interpreting Stack Sampling Data. Stack Sampling News. *1* (2):8-17. August 1973.

9. Standard Method for Sampling Stacks for Particulate Matter. In: 1971 Annual Book of ASTM Standards, Part 23. ASTM Designation D 2928-71. Philadelphia, PA 1971.

10. Vennard, J.K. Elementary Fluid Mechanics. John Wiley and Sons, Inc. New York. 1947.

11. Mitchell, W.J. and M.R. Midgett. Improved Procedure for Determining Mercury Emissions from Mercury Cell Chlor-Alkali Plants. J. APCA. *26* :674-677. July 1976.

12. Shigehara, R.T. Adjustments in the EPA Nomograph for Different Pitot Tube Coefficients and Dry Molecular Weights. Stack Sampling News. *2* :4-11. October 1974.

13. Vollaro, R.F. Recommended Procedure for Sample Traverses in Ducts Smaller than 12 Inches in Diameter. U.S. Environmental Protection Agency, Emission Measurement Branch. Research Triangle Park, NC. November 1976.

14. Klein, R. and C. Hach. Standard Additions: Uses and Limitation in Spectrophotometric Measurements. Amer. Lab. *9* :21. 1977.

15. Perkin Elmer Corporation. Analytical Methods for Atomic Absorption Spectrophotometry. Norwalk, Connecticut. September 1976.

*17.0 Tables, Diagrams, Flowcharts, and Validation Data*

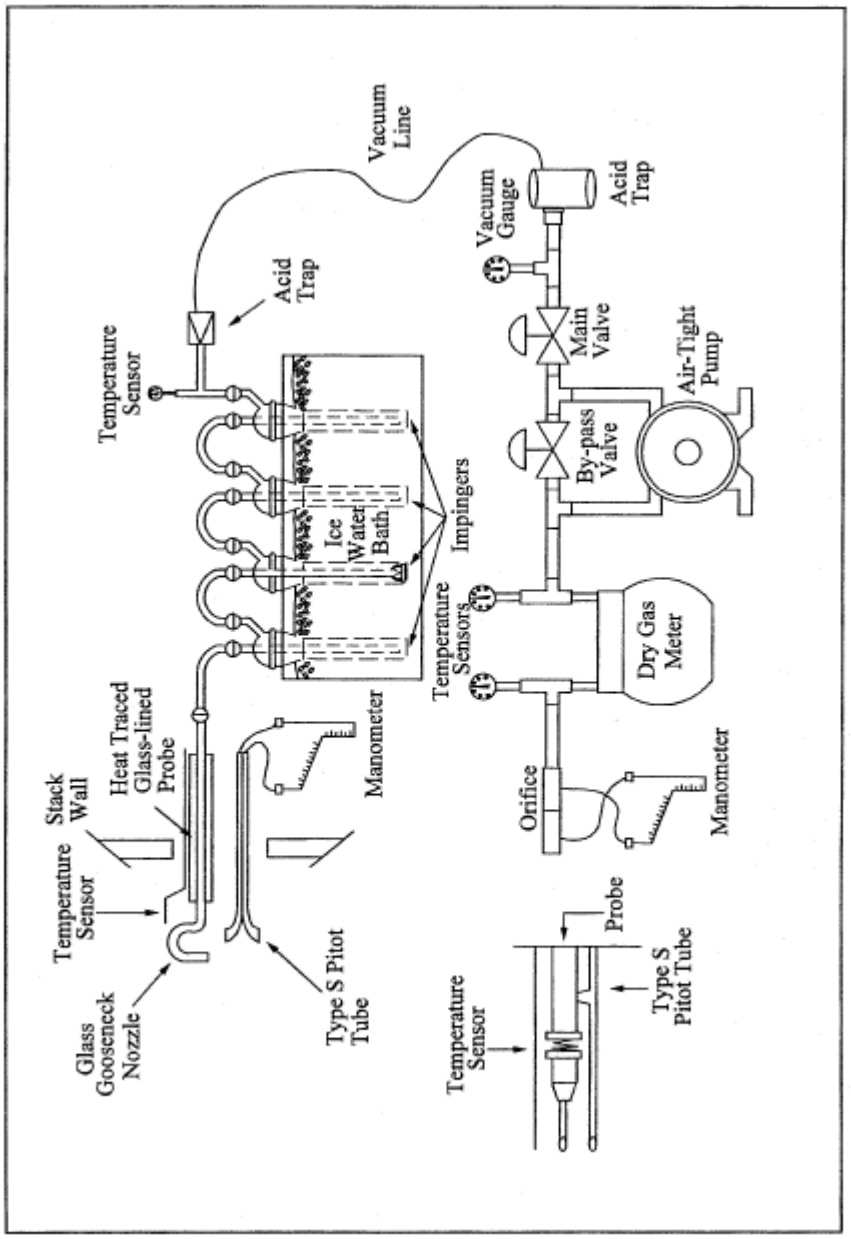


Figure 101-1. Mercury Sampling Train.

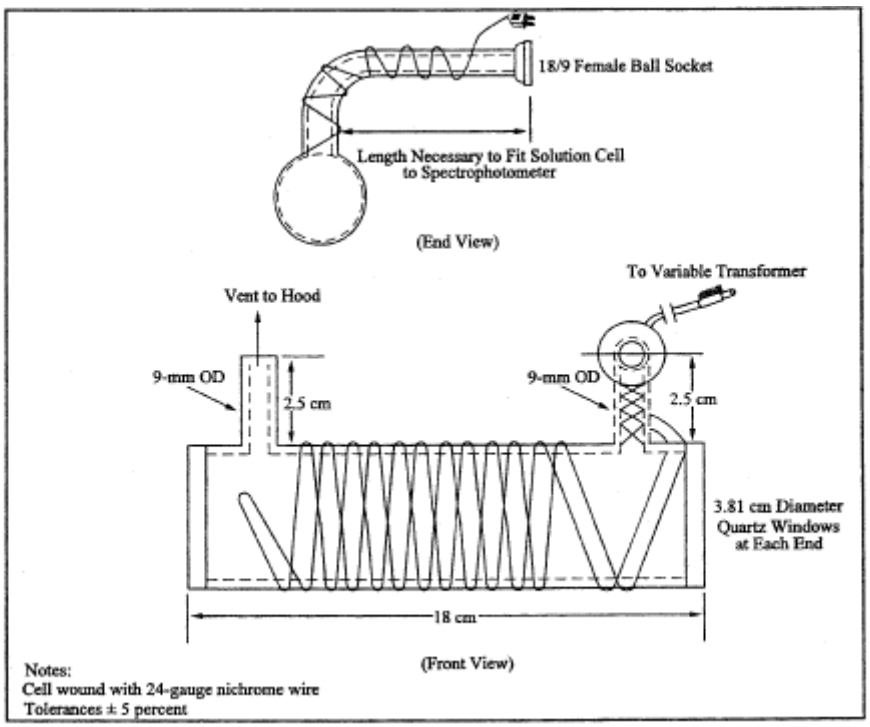


Figure 101-2. Optical Cell.

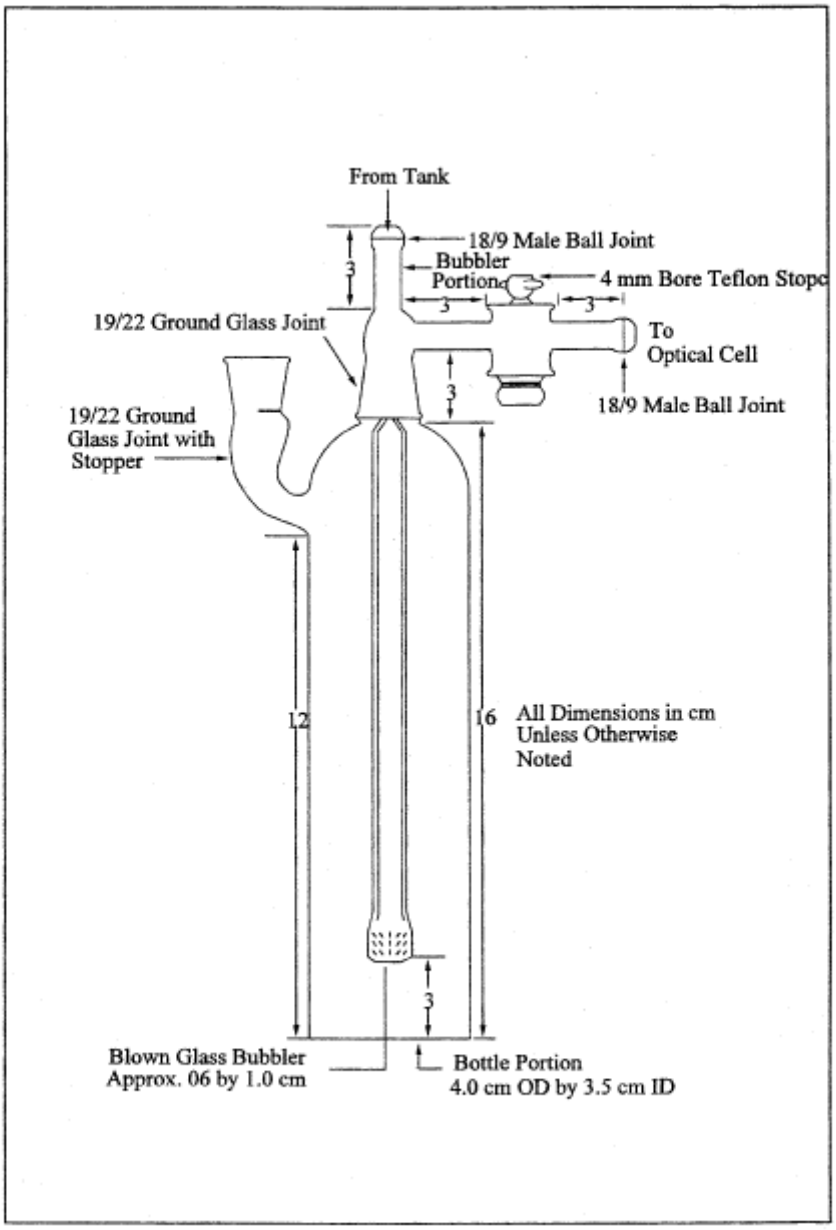


Figure 101-3. Aeration Cell.

Plant _____
Location _____
Operator _____
Date _____
Run No. _____
Sample box No. _____
Filter box No. _____
Meter H@ _____
C factor _____
Pitot tube coefficient, $C_p$ _____

SCHEMATIC OF STACK CROSS SECTION

Ambient temperature _____
Barometric pressure _____
Assumed moisture, % _____
Probe length, (ft.) _____
Nozzle identification No. _____
Average calibrated nozzle diameter, (in.) _____
Probe heater setting _____
Leak rate, (cfm) _____
Probe liner material _____
Static pressure, (in. Hg) _____
Filter No. _____

| Traverse point number | Sampling time | Vacuum | Stack temperature | Velocity head | Pressure differential across orifice meter | Gas meter reading | Gas sample temperature at dry gas meter | | Filter holder* temperature | Temperature of gas leaving condenser or last impinger |
|---|---|---|---|---|---|---|---|---|---|---|
| | | | | | | | Inlet | Outlet | | |
| | min. | (in.Hg) | ($T_s$) (°F) | ($\Delta P_s$) (in. $H_2O$) | (in. $H_2O$) | (ft³) | (°F) | (°F) | (°F) | (°F) |
| | | | | | | | | | | |
| | | | | | | | | | | |
| | | | | | | | | | | |
| | | | | | | | | | | |
| | | | | | | | | | | |
| | | | | | | | | | | |
| | | | | | | | | | | |
| | | | | | | | | | | |
| Total | | | | | | | Avg. | Avg. | | |
| Average | | | | | | | Avg. | | | |

* If Applicable

Figure 101-4. Mercury Field Data.

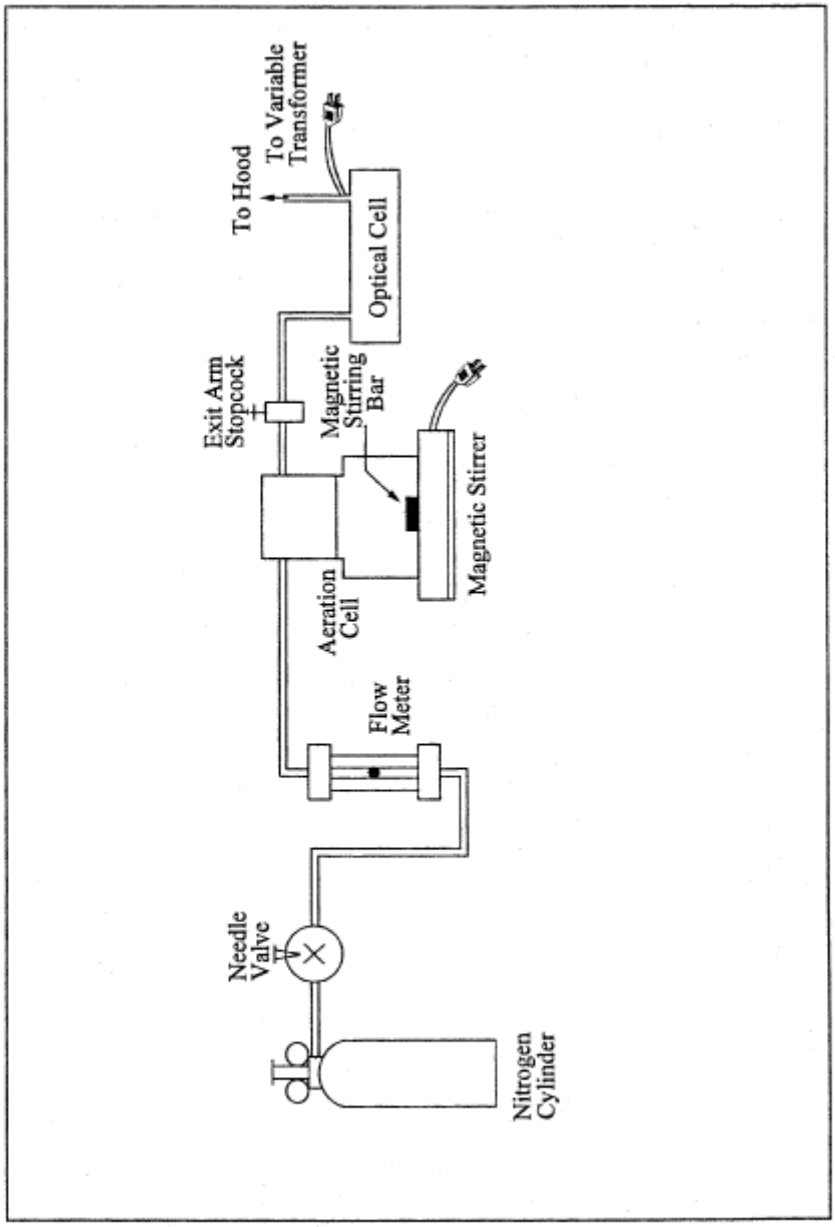


Figure 101-5. Schematic of Aeration System.

Method 101A—Determination of Particulate and Gaseous Mercury Emissions From Sewage Sludge Incinerators

NOTE: This method does not include all of the specifications ( *e.g.,* equipment and supplies) and procedures ( *e.g.,* sampling and analytical) essential to its performance. Some material is incorporated by reference from methods in appendix A to 40 CFR part 60 and in this part. Therefore, to obtain reliable results, persons using this method should also have a thorough knowledge of at least the following additional test methods: Methods 1, Method 2, Method 3, and Method 5 of part 60 (appendix A), and Method 101 part 61 (appendix B).

*1.0 Scope and Application*

1.1 Analytes.

| Analyte | CAS No. | Sensitivity |
|---|---|---|
| Mercury (Hg) | 7439-97-6 | Dependent upon spectrophotometer and recorder. |

1.2 Applicability. This method is applicable for the determination of Hg emissions from sewage sludge incinerators and other sources as specified in an applicable subpart of the regulations.

1.3 Data Quality Objectives. Adherence to the requirements of this method will enhance the quality of the data obtained from air pollutant sampling methods.

*2.0 Summary of Method*

2.1 Particulate and gaseous Hg emissions are withdrawn isokinetically from the source and are collected in acidic potassium permanganate ($KMnO_4$ ) solution. The Hg collected (in the mercuric form) is reduced to elemental Hg, which is then aerated from the solution into an optical cell and measured by atomic absorption spectrophotometry.

*3.0 Definitions. [Reserved]*

*4.0 Interferences*

4.1 Sample Collection. Excessive oxidizable organic matter in the stack gas prematurely depletes the $KMnO_4$ solution and thereby prevents further collection of Hg.

4.2 Analysis. Condensation of water vapor on the optical cell windows causes a positive interference.

*5.0 Safety*

5.1 Disclaimer. This method may involve hazardous materials, operations, and equipment. This test method may not address all of the safety problems associated with its use. It is the responsibility of the user of this test method to establish appropriate safety and health practices and determine the applicability of regulatory limitations prior to performing this test method.

5.2 Corrosive Reagents. The following reagents are hazardous. Personal protective equipment and safe procedures are useful in preventing chemical splashes. If contact occurs, immediately flush with copious amounts of water for at least 15 minutes. Remove clothing under shower and decontaminate. Treat residual chemical burns as thermal burns.

5.2.1 Hydrochloric Acid (HCl). Highly toxic. Vapors are highly irritating to eyes, skin, nose, and lungs, causing severe damage. May cause bronchitis, pneumonia, or edema of lungs. Exposure to concentrations of 0.13 to 0.2 percent can be lethal to humans in a few minutes. Provide ventilation to limit exposure. Reacts with metals, producing hydrogen gas.

5.2.2 Nitric Acid ($HNO_3$ ). Highly corrosive to eyes, skin, nose, and lungs. Vapors cause bronchitis, pneumonia, or edema of lungs. Reaction to inhalation may be delayed as long as 30 hours and still be fatal. Provide ventilation to limit exposure. Strong oxidizer. Hazardous reaction may occur with organic materials such as solvents.

5.2.3 Sulfuric acid ($H_2 SO_4$ ). Rapidly destructive to body tissue. Will cause third degree burns. Eye damage may result in blindness. Inhalation may be fatal from spasm of the larynx, usually within 30 minutes. May cause lung tissue damage with edema. 3 $mg/m^3$ will cause lung damage in uninitiated. 1 $mg/m^3$ for 8 hours will cause lung damage or, in higher concentrations, death. Provide ventilation to limit inhalation. Reacts violently with metals and organics.

5.3 Chlorine Evolution. Hydrochloric acid reacts with $KMnO_4$ to liberate chlorine gas. Although this is a minimal concern when small quantities of HCl (5-10 ml) are used in the impinger rinse, a potential safety hazard may still exist. At sources that emit higher concentrations of oxidizable materials ( *e.g.,* power plants), more HCl may be required to remove the larger amounts of brown deposit formed in the impingers. In such cases, the potential safety hazards due to sample container pressurization are greater, because of the larger volume of HCl rinse added to the recovered sample. These hazards are eliminated by storing and analyzing the HCl impinger wash separately from the permanganate impinger sample.

## *6.0 Equipment and Supplies*

6.1 Sample Collection and Sample Recovery. Same as Method 101, Sections 6.1 and 6.2, respectively, with the following exceptions:

6.1.1 Probe Liner. Same as in Method 101, Section 6.1.2, except that if a filter is used ahead of the impingers, the probe heating system must be used to minimize the condensation of gaseous Hg.

6.1.2 Filter Holder (Optional). Borosilicate glass with a rigid stainless-steel wire-screen filter support (do not use glass frit supports) and a silicone rubber or Teflon gasket, designed to provide a positive seal against leakage from outside or around the filter. The filter holder must be equipped with a filter heating system capable of maintaining a temperature around the filter holder of 120 ±14 °C (248 ±25 °F) during sampling to minimize both water and gaseous Hg condensation. A filter may also be used in cases where the stream contains large quantities of particulate matter.

6.2 Sample Analysis. Same as Method 101, Section 6.3, with the following additions and exceptions:

6.2.1 Volumetric Pipets. Class A; 1-, 2-, 3-, 4-, 5-, 10-, and 20-ml.

6.2.2 Graduated Cylinder. 25-ml.

6.2.3 Steam Bath.

6.2.4 Atomic Absorption Spectrophotometer or Equivalent. Any atomic absorption unit with an open sample presentation area in which to mount the optical cell is suitable. Instrument settings recommended by the particular manufacturer should be followed. Instruments designed specifically for the measurement of mercury using the cold-vapor technique are commercially available and may be substituted for the atomic absorption spectrophotometer.

6.2.5 Optical Cell. Alternatively, a heat lamp mounted above the cell or a moisture trap installed upstream of the cell may be used.

6.2.6 Aeration Cell. Alternatively, aeration cells available with commercial cold vapor instrumentation may be used.

6.2.7 Aeration Gas Cylinder. Nitrogen, argon, or dry, Hg-free air, equipped with a single-stage regulator. Alternatively, aeration may be provided by a peristaltic metering pump. If a commercial cold vapor instrument is used, follow the manufacturer's recommendations.

## *7.0 Reagents and Standards*

Unless otherwise indicated, it is intended that all reagents conform to the specifications established by the Committee on Analytical Reagents of the American Chemical Society, where such specifications are available; otherwise, use the best available grade.

7.1 Sample Collection and Recovery. The following reagents are required for sample collection and recovery:

7.1.1 Water. Deionized distilled, to conform to ASTM D 1193-77 or 91 Type 1. If high concentrations of organic matter are not expected to be present, the analyst may eliminate the $KMnO_4$ test for oxidizable organic matter. Use this water in all dilutions and solution preparations.

7.1.2 Nitric Acid, 50 Percent (V/V). Mix equal volumes of concentrated $HNO_3$ and water, being careful to add the acid to the water slowly.

7.1.3 Silica Gel. Indicating type, 6 to 16 mesh. If previously used, dry at 175 °C (350 °F) for 2 hours. New silica gel may be used as received.

7.1.4 Filter (Optional). Glass fiber filter, without organic binder, exhibiting at least 99.95 percent efficiency on 0.3-µm dioctyl phthalate smoke particles. The filter in cases where the gas stream contains large quantities of particulate matter, but blank filters should be analyzed for Hg content.

7.1.5 Sulfuric Acid, 10 Percent (V/V). Carefully add and mix 100 ml of concentrated $H_2 SO_4$ to 900 ml of water.

7.1.6 Absorbing Solution, 4 Percent $KMnO_4$ (W/V). Prepare fresh daily. Dissolve 40 g of $KMnO_4$ in sufficient 10 percent $H_2 SO_4$ to make 1 liter. Prepare and store in glass bottles to prevent degradation.

7.1.7 Hydrochloric Acid, 8 N. Carefully add and mix 67 ml of concentrated HCl to 33 ml of water.

7.2 Sample Analysis. The following reagents and standards are required for sample analysis:

7.2.1 Water. Same as in Section 7.1.1.

7.2.2 Tin (II) Solution. Prepare fresh daily, and keep sealed when not being used. Completely dissolve 20 g of tin (II) chloride (or 25 g of tin (II) sulfate) crystals (Baker Analyzed reagent grade or any other brand that will give a clear solution) in 25 ml of concentrated HCl. Dilute to 250 ml with water. Do not substitute $HNO_3$ $H2SO_4$ , or other strong acids for the HCl.

7.2.3 Sodium Chloride-Hydroxylamine Solution. Dissolve 12 g of sodium chloride and 12 g of hydroxylamine sulfate (or 12 g of hydroxylamine hydrochloride) in water and dilute to 100 ml.

7.2.4 Hydrochloric Acid, 8 N. Same as Section 7.1.7.

7.2.5 Nitric Acid, 15 Percent (V/V). Carefully add 15 ml $HNO_3$ to 85 ml of water.

7.2.6 Antifoam B Silicon Emulsion. J.T. Baker Company (or equivalent).

7.2.7 Mercury Stock Solution, 1 mg Hg/ml. Prepare and store all Hg standard solutions in borosilicate glass containers. Completely dissolve 0.1354 g of Hg (II) chloride in 75 ml of water. Add 10 ml of concentrated $HNO_3$ , and adjust the volume to exactly 100 ml with water. Mix thoroughly. This solution is stable for at least one month.

7.2.8 Intermediate Hg Standard Solution, 10 µg/ml. Prepare fresh weekly. Pipet 5.0 ml of the Hg stock solution (Section 7.2.7) into a 500 ml volumetric flask, and add 20 ml of 15 percent $HNO_3$ solution. Adjust the volume to exactly 500 ml with water. Thoroughly mix the solution.

7.2.9 Working Hg Standard Solution, 200 ng Hg/ml. Prepare fresh daily. Pipet 5.0 ml from the “Intermediate Hg Standard Solution” (Section 7.2.8) into a 250-ml volumetric flask. Add 5 ml of 4 percent $KMnO_4$ absorbing solution and 5 ml of 15 percent $HNO_3$ . Adjust the volume to exactly 250 ml with water. Mix thoroughly.

7.2.10 Potassium Permanganate, 5 Percent (W/V). Dissolve 5 g of $KMnO_4$ in water and dilute to 100 ml.

7.2.11 Filter. Whatman No. 40, or equivalent.

*8.0 Sample Collection, Preservation, Transport, and Storage*

Same as Method 101, Section 8.0, with the exception of the following:

8.1 Preliminary Determinations. Same as Method 101, Section 8.2, except that the liberation of free iodine in the first impinger due to high Hg or sulfur dioxide concentrations is not applicable. In this method, high oxidizable organic content may make it impossible to sample for the desired minimum time. This problem is indicated by the complete bleaching of the purple color of the $KMnO_4$ solution. In cases where an excess of water condensation is encountered, collect two runs to make one sample, or add an extra impinger in front of the first impinger (also containing acidified $KMnO_4$ solution).

8.2 Preparation of Sampling Train. Same as Method 101, Section 8.3, with the exception of the following:

8.2.1 In this method, clean all the glass components by rinsing with 50 percent $HNO_3$ , tap water, 8 N HCl, tap water, and finally with deionized distilled water. Then place 50 ml of absorbing solution in the first impinger and 100 ml in each of the second and third impingers.

8.2.2 If a filter is used, use a pair of tweezers to place the filter in the filter holder. Be sure to center the filter, and place the gasket in the proper position to prevent the sample gas stream from bypassing the filter. Check the filter for tears after assembly is completed. Be sure also to set the filter heating system at the desired operating temperature after the sampling train has been assembled.

8.3 Sampling Train Operation. In addition to the procedure outlined in Method 101, Section 8.5, maintain a temperature around the filter (if applicable) of 120 ±14 °C (248 ±25 °F).

8.4 Sample Recovery. Same as Method 101, Section 8.7, with the exception of the following:

8.4.1 Transfer the probe, impinger assembly, and (if applicable) filter assembly to the cleanup area.

8.4.2 Treat the sample as follows:

8.4.2.1 Container No. 1 (Impinger, Probe, and Filter Holder) and, if applicable, Container No. 1A (HCl rinse).

8.4.2.1.1 Using a graduated cylinder, measure the liquid in the first three impingers to within 1 ml. Record the volume of liquid present ( *e.g.,* see Figure 5-6 of Method 5). This information is needed to calculate the moisture content of the effluent gas. (Use only graduated cylinder and glass storage bottles that have been precleaned as in Section 8.2.1.) Place the contents of the first three impingers (four if an extra impinger was added as described in Section 8.1) into a 1000-ml glass sample bottle labeled Container No. 1.

NOTE: If a filter is used, remove the filter from its holder as outlined under Section 8.4.3.

8.4.2.1.2 Taking care that dust on the outside of the probe or other exterior surfaces does not get into the sample, quantitatively recover the Hg (and any condensate) from the probe nozzle, probe fitting, probe liner, front half of the filter holder (if applicable), and impingers as follows: Rinse these components with a total of 400 ml (350 ml if an extra impinger was added as described in Section 8.1) of fresh absorbing solution, carefully assuring removal of all loose particulate matter from the impingers; add all washings to the 1000 ml glass sample bottle. To remove any residual brown deposits on the glassware following the permanganate rinse, rinse with approximately 100 ml of water, carefully assuring removal of all loose particulate matter from the impingers. Add this rinse to Container No. 1.

8.4.2.1.3 If no visible deposits remain after this water rinse, do not rinse with 8 N HCl. If deposits do remain on the glassware after the water rinse, wash impinger walls and stems with 25 ml of 8 N HCl, and place the wash in a separate container labeled Container No. 1A as follows: Place 200 ml of water in a sample container labeled Container No. 1A. Wash the impinger walls and stem with the HCl by turning the impinger on its side and rotating it so that the HCl contacts all inside surfaces. Pour the HCl wash carefully with stirring into Container No. 1A.

8.4.2.1.4 After all washings have been collected in the appropriate sample container(s), tighten the lid(s) on the container(s) to prevent leakage during shipment to the laboratory. Mark the height of the fluid level to allow subsequent determination of whether leakage has occurred during transport. Label each container to identify its contents clearly.

8.4.3 Container No. 2 (Silica Gel). Same as Method 5, Section 8.7.6.3.

8.4.4 Container No. 3 (Filter). If a filter was used, carefully remove it from the filter holder, place it in a 100-ml glass sample bottle, and add 20 to 40 ml of absorbing solution. If it is necessary to fold the filter, be sure that the particulate cake is inside the fold. Carefully transfer to the 100-ml sample bottle any particulate matter and filter fibers that adhere to the filter holder gasket by using a dry Nylon bristle brush and a sharp-edged blade. Seal the container. Label the container to identify its contents clearly. Mark the height of the fluid level to allow subsequent determination of whether leakage has occurred during transport.

8.4.5 Container No. 4 (Filter Blank). If a filter was used, treat an unused filter from the same filter lot as that used for sampling according to the procedures outlined in Section 8.4.4.

8.4.6 Container No. 5 (Absorbing Solution Blank). Place 650 ml of 4 percent $KMnO_4$ absorbing solution in a 1000-ml sample bottle. Seal the container.

8.4.7 Container No. 6 (HCl Rinse Blank). Place 200 ml of water in a 1000-ml sample bottle, and add 25 ml of 8 N HCl carefully with stirring. Seal the container. Only one blank sample per 3 runs is required.

*9.0 Quality Control*

9.1 Miscellaneous Quality Control Measures.

| Section | Quality control measure | Effect |
|---|---|---|
| 8.0, 10.0 | Sampling equipment leak-checks and calibration | Ensure accuracy and precision of sampling measurements. |
| 10.2 | Spectrophotometer calibration | Ensure linearity of spectrophotometer response to standards. |
| 11.3.3 | Check for matrix effects | Eliminate matrix effects. |

9.2 Volume Metering System Checks. Same as Method 5, Section 9.2.

*10.0 Calibration and Standardization*

Same as Method 101, Section 10.0, with the following exceptions:

10.1 Optical Cell Heating System Calibration. Same as in Method 101, Section 10.4, except use a-25 ml graduated cylinder to add 25 ml of water to the bottle section of the aeration cell.

10.2 Spectrophotometer and Recorder Calibration.

10.2.1 The Hg response may be measured by either peak height or peak area.

NOTE: The temperature of the solution affects the rate at which elemental Hg is released from a solution and, consequently, it affects the shape of the absorption curve (area) and the point of maximum absorbance (peak height). To obtain reproducible results, all solutions must be brought to room temperature before use.

10.2.2 Set the spectrophotometer wave length at 253.7 nm, and make certain the optical cell is at the minimum temperature that will prevent water condensation. Then set the recorder scale as follows: Using a 25-ml graduated cylinder, add 25 ml of water to the aeration cell bottle. Add three drops of Antifoam B to the bottle, and then pipet 5.0 ml of the working Hg standard solution into the aeration cell.

NOTE: Always add the Hg-containing solution to the aeration cell after the 25 ml of water.

10.2.3 Place a Teflon-coated stirring bar in the bottle. Add 5 ml of absorbing solution to the aeration bottle, and mix well. Before attaching the bottle section to the bubbler section of the aeration cell, make certain that (1) the aeration cell exit arm stopcock (Figure 101-3 of Method 101) is closed (so that Hg will not prematurely enter the optical cell when the reducing agent is being added) and (2) there is no flow through the bubbler. If conditions (1) and (2) are

met, attach the bottle section to the bubbler section of the aeration cell. Add sodium chloride-hydroxylamine in 1 ml increments until the solution is colorless. Now add 5 ml of tin (II) solution to the aeration bottle through the side arm, and immediately stopper the side arm. Stir the solution for 15 seconds, turn on the recorder, open the aeration cell exit arm stopcock, and immediately initiate aeration with continued stirring. Determine the maximum absorbance of the standard, and set this value to read 90 percent of the recorder full scale.

*11.0 Analytical Procedure*

11.1 Sample Loss Check. Check the liquid level in each container to see if liquid was lost during transport. If a noticeable amount of leakage occurred, either void the sample or use methods subject to the approval of the Administrator to account for the losses.

11.2 Sample Preparation. Treat sample containers as follows:

11.2.1 Containers No. 3 and No. 4 (Filter and Filter Blank).

11.2.1.1 If a filter is used, place the contents, including the filter, of Containers No. 3 and No. 4 in separate 250-ml beakers, and heat the beakers on a steam bath until most of the liquid has evaporated. Do not heat to dryness. Add 20 ml of concentrated $HNO_3$ to the beakers, cover them with a watch glass, and heat on a hot plate at 70 °C (160 °F) for 2 hours. Remove from the hot plate.

11.2.1.2 Filter the solution from digestion of the Container No. 3 contents through Whatman No. 40 filter paper, and save the filtrate for addition to the Container No. 1 filtrate as described in Section 11.2.2. Discard the filter paper.

11.2.1.3 Filter the solution from digestion of the Container No. 4 contents through Whatman No. 40 filter paper, and save the filtrate for addition to Container No. 5 filtrate as described in Section 11.2.3 below. Discard the filter paper.

11.2.2 Container No. 1 (Impingers, Probe, and Filter Holder) and, if applicable, No. 1A (HCl rinse).

11.2.2.1 Filter the contents of Container No. 1 through Whatman No. 40 filter paper into a 1 liter volumetric flask to remove the brown manganese dioxide ($MnO_2$ ) precipitate. Save the filter for digestion of the brown $MnO_2$ precipitate. Add the sample filtrate from Container No. 3 to the 1-liter volumetric flask, and dilute to volume with water. If the combined filtrates are greater than 1000 ml, determine the volume to the nearest ml and make the appropriate corrections for blank subtractions. Mix thoroughly. Mark the filtrate as analysis Sample No. A.1 and analyze for Hg within 48 hr of the filtration step. Place the saved filter, which was used to remove the brown $MnO_2$ precipitate, into an appropriate sized container. In a laboratory hood, add 25 ml of 8 N HCl to the filter and allow to digest for a minimum of 24 hours at room temperature.

11.2.2.2 Filter the contents of Container 1A through Whatman No. 40 filter paper into a 500-ml volumetric flask. Then filter the digestate of the brown $MnO_2$ precipitate from Container No. 1 through Whatman No. 40 filter paper into the same 500-ml volumetric flask, and dilute to volume with water. Mark this combined 500 ml dilute solution as analysis Sample No. A.2. Discard the filters.

11.2.3 Container No. 5 (Absorbing Solution Blank) and No. 6 (HCl Rinse Blank).

11.2.3.1 Treat Container No. 5 as Container No. 1 (as described in Section 11.2.2), except substitute the filter blank filtrate from Container No. 4 for the sample filtrate from Container No. 3, and mark as Sample A.1 Blank.

11.2.3.2 Treat Container No. 6 as Container No. 1A, (as described in Section 11.2.2, except substitute the filtrate from the digested blank $MnO_2$ precipitate for the filtrate from the digested sample $MnO_2$ precipitate, and mark as Sample No. A.2 Blank.

NOTE: When analyzing samples A.1 Blank and HCl A.2 Blank, always begin with 10 ml aliquots. This applies specifically to blank samples.

11.3 Analysis. Calibrate the analytical equipment and develop a calibration curve as outlined in Section 10.0.

11.3.1 Mercury Samples. Then repeat the procedure used to establish the calibration curve with appropriately sized aliquots (1 to 10 ml) of the samples (from Sections 11.2.2 and 11.2.3) until two consecutive peak heights agree within 3 percent of their average value. If the 10 ml sample is below the detectable limit, use a larger aliquot (up to 20 ml), but decrease the volume of water added to the aeration cell accordingly to prevent the solution volume from exceeding the capacity of the aeration bottle. If the peak maximum of a 1.0 ml aliquot is off scale, further dilute the original sample to bring the Hg concentration into the calibration range of the spectrophotometer. If the Hg content of the absorbing solution and filter blank is below the working range of the analytical method, use zero for the blank.

11.3.2 Run a blank and standard at least after every five samples to check the spectrophotometer calibration; recalibrate as necessary.

11.3.3 Check for Matrix Effects (optional). Same as Method 101, Section 11.3.3.

## *12.0 Data Analysis and Calculations*

NOTE: Carry out calculations, retaining at least one extra decimal significant figure beyond that of the acquired data. Round off figures only after the final calculation. Other forms of the equations may be used as long as they give equivalent results.

12.1 Nomenclature.

$C_{(fltr)Hg}$ = Total ng of Hg in aliquot of $KMnO_4$ filtrate and $HNO_3$ digestion of filter analyzed (aliquot of analysis Sample No. A.1).

$C_{(fltr\ blk)Hg}$ = Total ng of Hg in aliquot of $KMnO_4$ blank and $HNO_3$ digestion of blank filter analyzed (aliquot of analysis Sample No. A.1 blank).

$C_{(HC1\ blk)Hg}$ = Total ng of Hg analyzed in aliquot of the 500-ml analysis Sample No. HCl A.2 blank.

$C_{(HCl)Hg}$ = Total ng of Hg analyzed in the aliquot from the 500-ml analysis Sample No. HCl A.2.

DF = Dilution factor for the HCl-digested Hg-containing solution, Analysis Sample No. “HCl A.2.”

$DF_{blk}$ = Dilution factor for the HCl-digested Hg containing solution, Analysis Sample No. “HCl A.2 blank.” (Refer to sample No. “HCl A.2” dilution factor above.)

$m_{(fltr)Hg}$ = Total blank corrected µg of Hg in $KMnO_4$ filtrate and $HNO_3$ digestion of filter sample.

$m_{(HCl)Hg}$ = Total blank corrected µg of Hg in HCl rinse and HCl digestate of filter sample.

$m_{Hg}$ = Total blank corrected Hg content in each sample, µg.

S = Aliquot volume of sample added to aeration cell, ml.

$S_{blk}$ = Aliquot volume of blank added to aeration cell, ml.

$Vf_{(blk)}$ = Solution volume of blank sample, 1000 ml for samples diluted as described in Section 11.2.2.

$V_{f(fltr)}$ = Solution volume of original sample, normally 1000 ml for samples diluted as described in Section 11.2.2.

$V_{f(HCl)}$ = Solution volume of original sample, 500 ml for samples diluted as described in Section 11.2.1.

$10^{-3}$ = Conversion factor, µg/ng.

12.2 Average Dry Gas Meter Temperature and Average Orifice Pressure Drop, Dry Gas Volume, Volume of Water Vapor Condensed, Moisture Content, Isokinetic Variation, and Stack Gas Velocity and Volumetric Flow Rate. Same as Method 5, Sections 12.2 through 12.5, 12.11, and 12.12, respectively.

12.3 Total Mercury.

12.3.1 For each source sample, correct the average maximum absorbance of the two consecutive samples whose peak heights agree within 3 percent of their average for the contribution of the blank. Use the calibration curve and these corrected averages to determine the final total weight of Hg in ng in the aeration cell for each source sample.

12.3.2 Correct for any dilutions made to bring the sample into the working range of the spectrophotometer.

$$m_{(HCl)Hg} = \frac{\left[C_{(HCl)Hg} DF\right]}{S} - \frac{\left[C_{(HClblk)Hg} DF_{blk}\right]}{S_{blk}} Vf_{(HCl)} \left(10^{-3}\right) \qquad \text{Eq. 101A-1}$$

NOTE: This dilution factor applies only to the intermediate dilution steps, since the original sample volume $[(V_f)_{HCL}]$ of "HCl A.2" has been factored out in the equation along with the sample aliquot (S). In Eq. 101A-1, the sample aliquot, S, is introduced directly into the aeration cell for analysis according to the procedure outlined in Section 11.3.1. A dilution factor is required only if it is necessary to bring the sample into the analytical instrument's calibration range.

NOTE: The maximum allowable blank subtraction for the HCl is the lesser of the two following values: (1) the actual blank measured value (analysis Sample No. HCl A.2 blank), or (2) 5% of the Hg content in the combined HCl rinse and digested sample (analysis Sample No. HCl A.2).

$$m_{(flr)Hg} = \frac{\left[C_{(flr)Hg} DF\, V_{f(flr)}\right]}{S} - \frac{\left[C_{(flrblk)Hg} DF_{blk}\, V_{f(blk)}\right]}{S_{blk}} \qquad \text{Eq. 101A-2}$$

NOTE: The maximum allowable blank subtraction for the HCl is the lesser of the two following values: (1) the actual blank measured value (analysis Sample No. "A.1 blank"), or (2) 5% of the Hg content in the filtrate (analysis Sample No. "A.1").

$$m_{Hg} = m_{(HCl)Hg} + m_{(flr)Hg} \qquad \text{Eq. 101A-3}$$

12.3 Mercury Emission Rate. Same as Method 101, Section 12.3.

12.4 Determination of Compliance. Same as Method 101, Section 12.4.

***13.0 Method Performance***

13.1 Precision. Based on eight paired-train tests, the intra-laboratory standard deviation was estimated to be 4.8 µg/ml in the concentration range of 50 to 130 µg/m $^3$ .

13.2 Bias. [Reserved]

13.3 Range. After initial dilution, the range of this method is 20 to 800 ng Hg/ml. The upper limit can be extended by further dilution of the sample.

*14.0 Pollution Prevention [Reserved]*

*15.0 Waste Management [Reserved]*

*16.0 References*

Same as Section 16.0 of Method 101, with the addition of the following:

1. Mitchell, W.J., *et al.* Test Methods to Determine the Mercury Emissions from Sludge Incineration Plants. U.S. Environmental Protection Agency. Research Triangle Park, NC. Publication No. EPA-600/4-79-058. September 1979.

2. Wilshire, Frank W., *et al.* Reliability Study of the U.S. EPA's Method 101A—Determination of Particulate and Gaseous Mercury Emissions. U.S. Environmental Protection Agency. Research Triangle Park, NC. Report No. 600/D-31/219 AREAL 367, NTIS Acc No. PB91-233361.

3. Memorandum from William J. Mitchell to Roger T. Shigehara discussing the potential safety hazard in Section 7.2 of Method 101A. February 28, 1990.

*17.0 Tables, Diagrams, Flowcharts, And Validation Data [Reserved]*

Method 102—Determination of Particulate and Gaseous Mercury Emissions From Chlor-Alkali Plants (Hydrogen Streams)

NOTE: This method does not include all of the specifications ( *e.g.,* equipment and supplies) and procedures ( *e.g.,* sampling and analytical) essential to its performance. Some material is incorporated by reference from other methods in this part and in appendix A to 40 CFR part 60. Therefore, to obtain reliable results, persons using this method should have a thorough knowledge of at least the following additional test methods: Method 1, Method 2, Method 3, Method 5, and Method 101.

*1.0 Scope and Application*

1.1 Analytes.

| **Analyte** | **CAS No.** | **Sensitivity** |
|---|---|---|
| Mercury (Hg) | 7439-97-6 | Dependent upon recorder and spectrophotometer. |

1.2 Applicability. This method is applicable for the determination of Hg emissions, including both particulate and gaseous Hg, from chlor-alkali plants and other sources (as specified in the regulations) where the carrier-gas stream in the duct or stack is principally hydrogen.

1.3 Data Quality Objectives. Adherence to the requirements of this method will enhance the quality of the data obtained from air pollutant sampling methods.

*2.0 Summary of Method*

2.1 Particulate and gaseous Hg emissions are withdrawn isokinetically from the source and collected in acidic iodine monochloride (ICl) solution. The Hg collected (in the mercuric form) is reduced to elemental Hg, which is then aerated from the solution into an optical cell and measured by atomic absorption spectrophotometry.

*3.0 Definitions [Reserved]*

*4.0 Interferences*

Same as Method 101, Section 4.2.

## *5.0 Safety*

5.1 Disclaimer. This method may involve hazardous materials, operations, and equipment. This test method may not address all of the safety problems associated with its use. It is the responsibility of the user of this test method to establish appropriate safety and health practices and determine the applicability of regulatory limitations prior to performing this test method.

5.2 Corrosive Reagents. Same as Method 101, Section 5.2.

5.3 Explosive Mixtures. The sampler must conduct the source test under conditions of utmost safety because hydrogen and air mixtures are explosive. Since the sampling train essentially is leakless, attention to safe operation can be concentrated at the inlet and outlet. If a leak does occur, however, remove the meter box cover to avoid a possible explosive mixture. The following specific precautions are recommended:

5.3.1 Operate only the vacuum pump during the test. The other electrical equipment, *e.g.,* heaters, fans, and timers, normally are not essential to the success of a hydrogen stream test.

5.3.2 Seal the sample port to minimize leakage of hydrogen from the stack.

5.3.3 Vent sampled hydrogen at least 3 m (10 ft) away from the train. This can be accomplished by attaching a 13-mm (0.50-in.) ID Tygon tube to the exhaust from the orifice meter.

NOTE: A smaller ID tubing may cause the orifice meter calibration to be erroneous. Take care to ensure that the exhaust line is not bent or pinched.

## *6.0 Equipment and Supplies*

Same as Method 101, Section 6.0, with the exception of the following:

6.1 Probe Heating System. Do not use, unless otherwise specified.

6.2 Glass Fiber Filter. Do not use, unless otherwise specified.

## *7.0 Reagents and Standards*

Same as Method 101, Section 7.0.

## *8.0 Sample Collection, Preservation, Transport, and Storage*

Same as Method 101, Section 8.0, with the exception of the following:

8.1 Setting of Isokinetic Rates.

8.1.1 If a nomograph is used, take special care in the calculation of the molecular weight of the stack gas and in the setting of the nomograph to maintain isokinetic conditions during sampling (Sections 8.1.1.1 through 8.1.1.3 below).

8.1.1.1 Calibrate the meter box orifice. Use the techniques described in APTD-0576 (see Reference 9 in Section 17.0 of Method 5). Calibration of the orifice meter at flow conditions that simulate the conditions at the source is suggested. Calibration should either be done with hydrogen or with some other gas having similar Reynolds Number so that there is similarity between the Reynolds Numbers during calibration and during sampling.

8.1.1.2 The nomograph described in APTD-0576 cannot be used to calculate the C factor because the nomograph is designed for use when the stack gas dry molecular weight is 29 ±4. Instead, the following calculation should be made to determine the proper C factor:

$$C = 0.00154 \Delta H @ C_p^{\,2} T_m \left( P_s / P_m \right) \frac{\left(1 - B_{ws}\right)^2}{\left(1 - B_{ws}\right) + 18 B_{ws}} \qquad \text{Eq. 102-1}$$

Where:

$B_{ws}$ = Fraction by volume of water vapor in the stack gas.

$C_p$ = Pitot tube calibration coefficient, dimensionless.

$M_d$ = Dry molecular weight of stack gas, lb/lb-mole.

$P_s$ = Absolute pressure of stack gas, in. Hg.

$P_m$ = Absolute pressure of gas at the meter, in. Hg.

$T_m$ = Absolute temperature of gas at the orifice, °R.

$\Delta H_@$ = Meter box calibration factor obtained in Section 8.1.1.1, in. $H_2$ O.

0.00154 = (in. $H_2$ O/°R).

NOTE: This calculation is left in English units, and is not converted to metric units because nomographs are based on English units.

8.1.1.3 Set the calculated C factor on the operating nomograph, and select the proper nozzle diameter and K factor as specified in APTD-0576. If the C factor obtained in Section 8.1.1.2 exceeds the values specified on the existing operating nomograph, expand the C scale logarithmically so that the values can be properly located.

8.1.2 If a calculator is used to set isokinetic rates, it is suggested that the isokinetic equation presented in Reference 13 in Section 17.0 of Method 101 be consulted.

8.2 Sampling in Small (<12-in. Diameter) Stacks. When the stack diameter (or equivalent diameter) is less than 12 inches, conventional pitot tube-probe assemblies should not be used. For sampling guidelines, see Reference 14 in Section 17.0 of Method 101.

*9.0 Quality Control*

Same as Method 101, Section 9.0.

*10.0 Calibration and Standardizations*

Same as Method 101, Section 10.0.

*11.0 Analytical Procedure*

Same as Method 101, Section 11.0.

*12.0 Data Analysis and Calculations*

Same as Method 101, Section 12.0.

*13.0 Method Performance*

Same as Method 101, Section 13.0.

13.1 Analytical Range. After initial dilution, the range of this method is 0.5 to 120 µg Hg/ml. The upper limit can be extended by further dilution of the sample.

*14.0 Pollution Prevention. [Reserved]*

*15.0 Waste Management. [Reserved]*

*16.0 References*

Same as Method 101, Section 16.0.

*17.0 Tables, Diagrams, Flowcharts, and Validation Data. [Reserved]*

Method 103—Beryllium Screening Method

*1.0 Scope and Application*

1.1 Analytes.

| **Analyte** | **CAS No.** | **Sensitivity** |
|---|---|---|
| Beryllium (Be) | 7440-41-7 | Dependent upon analytical procedure used. |

1.2 Applicability. This procedure details guidelines and requirements for methods acceptable for use in determining Be emissions in ducts or stacks at stationary sources.

1.3 Data Quality Objectives. Adherence to the requirements of this method will enhance the quality of the data obtained from air pollutant sampling methods.

*2.0 Summary of Method*

2.1 Particulate Be emissions are withdrawn isokinetically from three points in a duct or stack and are collected on a filter. The collected sample is analyzed for Be using an appropriate technique.

*3.0 Definitions. [Reserved]*

*4.0 Interferences. [Reserved]*

*5.0 Safety*

5.1 Disclaimer. This method may involve hazardous materials, operations, and equipment. This test method may not address all of the safety problems associated with its use. It is the responsibility of the user of this test method to establish appropriate safety and health practices and determine the applicability of regulatory limitations prior to performing this test method.

5.2 Hydrochloric Acid (HCl). Highly corrosive and toxic. Vapors are highly irritating to eyes, skin, nose, and lungs, causing severe damage. May cause bronchitis, pneumonia, or edema of lungs. Exposure to concentrations of 0.13 to 0.2 percent can be lethal to humans in a few minutes. Provide ventilation to limit exposure. Reacts with metals, producing hydrogen gas. Personal protective equipment and safe procedures are useful in preventing chemical splashes. If contact occurs, immediately flush with copious amounts of water at least 15 minutes. Remove clothing under shower and decontaminate. Treat residual chemical burn as thermal burn.

*6.0 Equipment and Supplies*

6.1 Sample Collection. A schematic of the required sampling train configuration is shown in Figure 103-1 in Section 17.0. The essential components of the train are as follows:

6.1.1 Nozzle. Stainless steel, or equivalent, with sharp, tapered leading edge.

6.1.2 Probe. Sheathed borosilicate or quartz glass tubing.

6.1.3 Filter. Millipore AA, or equivalent, with appropriate filter holder that provides a positive seal against leakage from outside or around the filter. It is suggested that a Whatman 41, or equivalent, be placed immediately against the back side of the Millipore filter as a guard against breakage of the Millipore. Include the backup filter in the analysis. To be equivalent, other filters shall exhibit at least 99.95 percent efficiency (0.05 percent penetration) on 0.3 micron dioctyl phthalate smoke particles, and be amenable to the Be analysis procedure. The filter efficiency tests shall be conducted in accordance with ASTM D 2986-71, 78, 95a (incorporated by reference—see § 61.18). Test data from the supplier's quality control program are sufficient for this purpose.

6.1.4 Meter-Pump System. Any system that will maintain isokinetic sampling rate, determine sample volume, and is capable of a sampling rate of greater than 14 lpm (0.5 cfm).

6.2 Measurement of Stack Conditions. The following equipment is used to measure stack conditions:

6.2.1 Pitot Tube. Type S, or equivalent, with a constant coefficient (±5 percent) over the working range.

6.2.2 Inclined Manometer, or Equivalent. To measure velocity head to ±10 percent of the minimum value.

6.2.3 Temperature Measuring Device. To measure stack temperature to ±1.5 percent of the minimum absolute stack temperature.

6.2.4 Pressure Measuring Device. To measure stack pressure to ±2.5 mm Hg (0.1 in. Hg).

6.2.5 Barometer. To measure atmospheric pressure to ±2.5 mm Hg (0.1 in. Hg).

6.2.6 Wet and Dry Bulb Thermometers, Drying Tubes, Condensers, or Equivalent. To determine stack gas moisture content to ±1 percent.

6.3 Sample Recovery.

6.3.1 Probe Cleaning Equipment. Probe brush or cleaning rod at least as long as probe, or equivalent. Clean cotton balls, or equivalent, should be used with the rod.

6.3.2 Leakless Glass Sample Bottles. To contain sample.

6.4 Analysis. All equipment necessary to perform an atomic absorption, spectrographic, fluorometric, chromatographic, or equivalent analysis.

*7.0 Reagents and Standards*

7.1 Sample Recovery.

7.1.1 Water. Deionized distilled, to conform to ASTM D 1193-77, 91 (incorporated by reference—see § 61.18), Type 3.

7.1.2 Acetone. Reagent grade.

7.1.3 Wash Acid, 50 Percent (V/V) Hydrochloric Acid (HCl). Mix equal volumes of concentrated HCl and water, being careful to add the acid slowly to the water.

7.2 Analysis. Reagents and standards as necessary for the selected analytical procedure.

*8.0 Sample Collection, Preservation, Transport, and Storage*

Guidelines for source testing are detailed in the following sections. These guidelines are generally applicable; however, most sample sites differ to some degree and temporary alterations such as stack extensions or expansions often are required to insure the best possible sample site. Further, since Be is hazardous, care should be taken to minimize exposure. Finally, since the total quantity of Be to be collected is quite small, the test must be carefully conducted to prevent contamination or loss of sample.

8.1 Selection of a Sampling Site and Number of Sample Runs. Select a suitable sample site that is as close as practicable to the point of atmospheric emission. If possible, stacks smaller than one foot in diameter should not be sampled.

8.1.1 Ideal Sampling Site. The ideal sampling site is at least eight stack or duct diameters downstream and two diameters upstream from any flow disturbance such as a bend, expansion or contraction. For rectangular cross sections, use Equation 103-1 in Section 12.2 to determine an equivalent diameter, $D_e$ .

8.1.2 Alternate Sampling Site. Some sampling situations may render the above sampling site criteria impractical. In such cases, select an alternate site no less than two diameters downstream and one-half diameter upstream from any point of flow disturbance. Additional sample runs are recommended at any sample site not meeting the criteria of Section 8.1.1.

8.1.3 Number of Sample Runs Per Test. Three sample runs constitute a test. Conduct each run at one of three different points. Select three points that proportionately divide the diameter, or are located at 25, 50, and 75 percent of the diameter from the inside wall. For horizontal ducts, sample on a vertical line through the centroid. For rectangular ducts, sample on a line through the centroid and parallel to a side. If additional sample runs are performed per Section 8.1.2, proportionately divide the duct to accommodate the total number of runs.

8.2 Measurement of Stack Conditions. Using the equipment described in Section 6.2, measure the stack gas pressure, moisture, and temperature to determine the molecular weight of the stack gas. Sound engineering estimates may be made in lieu of direct measurements. Describe the basis for such estimates in the test report.

8.3 Preparation of Sampling Train.

8.3.1 Assemble the sampling train as shown in Figure 103-1. It is recommended that all glassware be precleaned by soaking in wash acid for two hours.

8.3.2 Leak check the sampling train at the sampling site. The leakage rate should not be in excess of 1 percent of the desired sample rate.

8.4 Sampling Train Operation.

8.4.1 For each run, measure the velocity at the selected sampling point. Determine the isokinetic sampling rate. Record the velocity head and the required sampling rate. Place the nozzle at the sampling point with the tip pointing directly into the gas stream. Immediately start the pump and adjust the flow to isokinetic conditions. At the conclusion of the test, record the sampling rate. Again measure the velocity head at the sampling point. The required isokinetic rate at the end of the period should not have deviated more than 20 percent from that originally calculated. Describe the reason for any deviation beyond 20 percent in the test report.

8.4.2 Sample at a minimum rate of 14 liters/min (0.5 cfm). Obtain samples over such a period or periods of time as are necessary to determine the maximum emissions which would occur in a 24-hour period. In the case of cyclic operations, perform sufficient sample runs so as to allow determination or calculation of the emissions that occur over the duration of the cycle. A minimum sampling time of two hours per run is recommended.

8.5 Sample Recovery.

8.5.1 It is recommended that all glassware be precleaned as in Section 8.3. Sample recovery should also be performed in an area free of possible Be contamination. When the sampling train is moved, exercise care to prevent breakage and contamination. Set aside a portion of the acetone used in the sample recovery as a blank for analysis. The total amount of acetone used should be measured for accurate blank correction. Blanks can be eliminated if prior analysis shows negligible amounts.

8.5.2 Remove the filter (and backup filter, if used) and any loose particulate matter from filter holder, and place in a container.

8.5.3 Clean the probe with acetone and a brush or long rod and cotton balls. Wash into the container with the filter. Wash out the filter holder with acetone, and add to the same container.

*9.0 Quality Control. [Reserved]*

*10.0 Calibration and Standardization*

10.1 Sampling Train. As a procedural check, compare the sampling rate regulation with a dry gas meter, spirometer, rotameter (calibrated for prevailing atmospheric conditions), or equivalent, attached to the nozzle inlet of the complete sampling train.

10.2 Analysis. Perform the analysis standardization as suggested by the manufacturer of the instrument, or the procedures for the analytical method in use.

*11.0 Analytical Procedure*

Make the necessary preparation of samples and analyze for Be. Any currently acceptable method (e.g., atomic absorption, spectrographic, fluorometric, chromatographic) may be used.

*12.0 Data Analysis and Calculations*

12.1 Nomenclature.

$A_s$ (avg) = Stack area, $m^2$ ($ft^2$ ).

L = Length.

R = Be emission rate, g/day.

$V_s$ (avg) = Average stack gas velocity, m/sec (ft/sec).

$V_{total}$ = Total volume of gas sampled, $m^3$ ($ft^3$ ).

W = Width.

$W_t$ = Total weight of Be collected, mg.

$10^{-6}$ = Conversion factor, g/µg.

86,400 = Conversion factor, sec/day.

12.2 Calculate the equivalent diameter, De, for a rectangular cross section as follows:

$$D_e = \frac{2 \cdot L \cdot W}{L + W} \qquad \text{Eq. 103-1}$$

12.3 Calculate the Be emission rate, R, in g/day for each stack using Equation 103-2. For cyclic operations, use only the time per day each stack is in operation. The total Be emission rate from a source is the summation of results from all stacks.

$$R = \frac{W_t V_{s(avg)} A_s (86,400)(10^{-6})}{V_{total}} \qquad \text{Eq. 103-2}$$

12.4 Test Report. Prepare a test report that includes as a minimum: A detailed description of the sampling train used, results of the procedural check described in Section 10.1 with all data and calculations made, all pertinent data taken during the test, the basis for any estimates made, isokinetic sampling calculations, and emission results. Include a description of the test site, with a block diagram and brief description of the process, location of the sample points in the stack cross section, and stack dimensions and distances from any point of disturbance.

*13.0 Method Performance. [Reserved]*

*14.0 Pollution Prevention. [Reserved]*

*15.0 Waste Management. [Reserved]*

*16.0 References. [Reserved]*

*17.0 Tables, Diagrams, Flow Charts, and Validation Data*

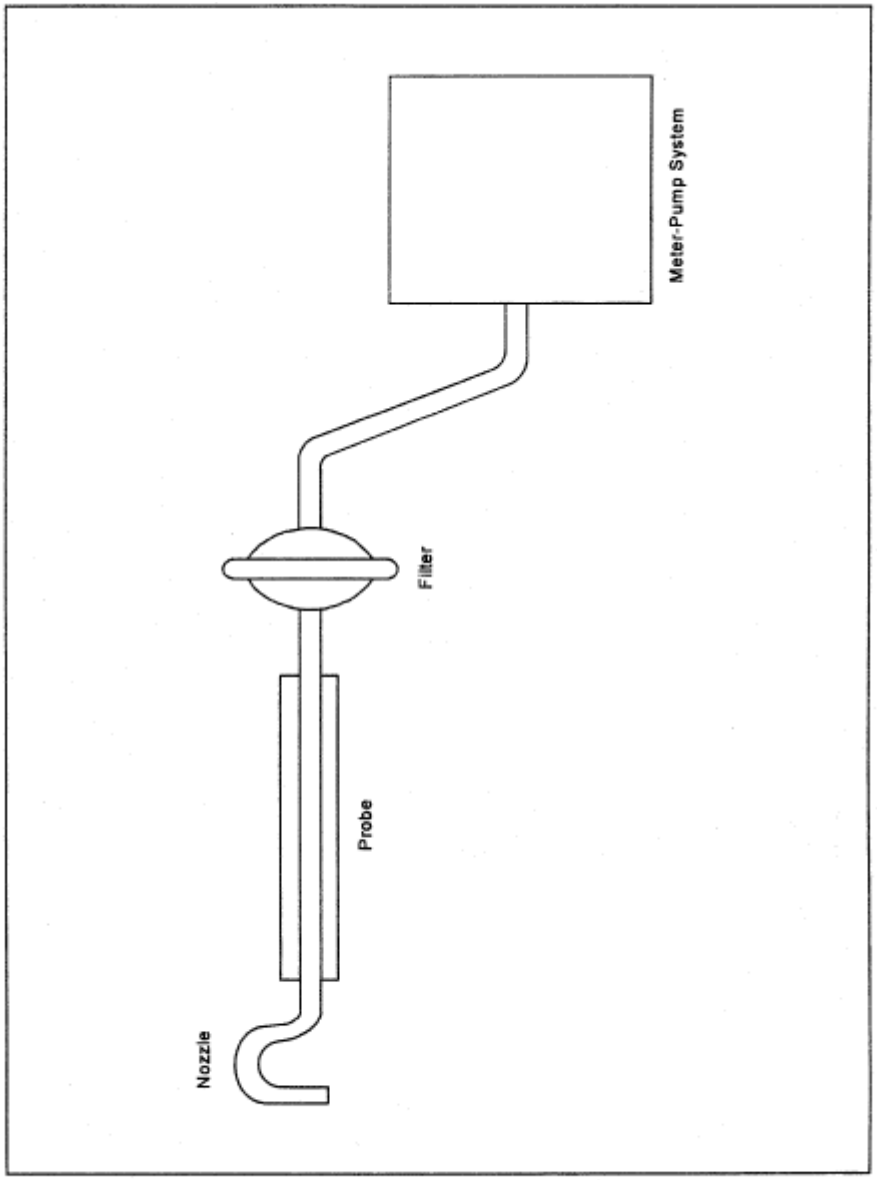


**Figure 103-1. Beryllium Screening Method Sampling Train Schematic.**

Method 104—Determination of Beryllium Emissions From Stationary Sources

NOTE: This method does not include all of the specifications ( *e.g.,* equipment and supplies) and procedures ( *e.g.,* sampling and analytical) essential to its performance. Some material is incorporated by reference from methods in appendix A to 40 CFR part 60. Therefore, to obtain reliable results, persons using this method should have a thorough knowledge of at least the following additional test methods: Method 1, Method 2, Method 3, and Method 5 in appendix A, part 60.

*1.0 Scope and Application*

1.1 Analytes.

| Analyte | CAS No. | Sensitivity |
|---|---|---|
| Beryllium (Be) | 7440-41-7 | Dependent upon recorder and spectrophotometer. |

1.2 Applicability. This method is applicable for the determination of Be emissions in ducts or stacks at stationary sources. Unless otherwise specified, this method is not intended to apply to gas streams other than those emitted directly to the atmosphere without further processing.

1.3 Data Quality Objectives. Adherences to the requirements of this method will enhance the quality of the data obtained from air pollutant sampling methods.

*2.0 Summary of Method*

2.1 Particulate and gaseous Be emissions are withdrawn isokinetically from the source and are collected on a glass fiber filter and in water. The collected sample is digested in an acid solution and is analyzed by atomic absorption spectrophotometry.

*3.0 Definitions [Reserved]*

*4.0 Interferences*

4.1 Matrix Effects. Analysis for Be by flame atomic absorption spectrophotometry is sensitive to the chemical composition and to the physical properties ( *e.g.,* viscosity, pH) of the sample. Aluminum and silicon in particular are known to interfere when present in appreciable quantities. The analytical procedure includes (optionally) the use of the Method of Standard Additions to check for these matrix effects, and sample analysis using the Method of Standard Additions if significant matrix effects are found to be present (see Reference 2 in Section 16.0).

*5.0 Safety*

5.1 Disclaimer. This method may involve hazardous materials, operations, and equipment. This test method may not address all of the safety problems associated with its use. It is the responsibility of the user of this test method to establish appropriate safety and health practices and determine the applicability of regulatory limitations prior to performing this test method.

5.2 Corrosive reagents. The following reagents are hazardous. Personal protective equipment and safe procedures are useful in preventing chemical splashes. If contact occurs, immediately flush with copious amounts of water at least 15 minutes. Remove clothing under shower and decontaminate. Treat residual chemical burn as thermal burn.

5.2.1 Hydrochloric Acid ($HC_l$ ). Highly toxic. Vapors are highly irritating to eyes, skin, nose, and lungs, causing severe damage. May cause bronchitis, pneumonia, or edema of lungs. Exposure to concentrations of 0.13 to 0.2 percent can be lethal to humans in a few minutes. Provide ventilation to limit exposure. Reacts with metals, producing hydrogen gas.

5.2.2 Hydrogen Peroxide ($H_2 O_2$ ). Irritating to eyes, skin, nose, and lungs.

5.2.3 Nitric Acid ($HNO_3$ ). Highly corrosive to eyes, skin, nose, and lungs. Vapors cause bronchitis, pneumonia, or edema of lungs. Reaction to inhalation may be delayed as long as 30 hours and still be fatal. Provide ventilation to limit exposure. Strong oxidizer. Hazardous reaction may occur with organic materials such as solvents.

5.2.4 Sodium Hydroxide (NaOH). Causes severe damage to eyes and skin. Inhalation causes irritation to nose, throat, and lungs. Reacts exothermically with limited amounts of water.

5.3 Beryllium is hazardous, and precautions should be taken to minimize exposure.

## *6.0 Equipment and Supplies*

6.1 Sample Collection. Same as Method 5, Section 6.1, with the exception of the following:

6.1.1 Sampling Train. Same as Method 5, Section 6.1.1, with the exception of the following:

6.1.2 Probe Liner. Borosilicate or quartz glass tubing. A heating system capable of maintaining a gas temperature of 120 ±14 °C (248 ±25 °F) at the probe exit during sampling to prevent water condensation may be used.

NOTE: Do not use metal probe liners.

6.1.3 Filter Holder. Borosilicate glass, with a glass frit filter support and a silicone rubber gasket. Other materials of construction ( *e.g.,* stainless steel, Teflon, Viton) may be used, subject to the approval of the Administrator. The holder design shall provide a positive seal against leakage from the outside or around the filter. The holder shall be attached immediately at the outlet of the probe. A heating system capable of maintaining the filter at a minimum temperature in the range of the stack temperature may be used to prevent condensation from occurring.

6.1.4 Impingers. Four Greenburg-Smith impingers connected in series with leak-free ground glass fittings or any similar leak-free noncontaminating fittings. For the first, third, and fourth impingers, use impingers that are modified by replacing the tip with a 13 mm-ID (0.5 in.) glass tube extending to 13 mm (0.5 in.) from the bottom of the flask may be used.

6.2 Sample Recovery. The following items are needed for sample recovery:

6.2.1 Probe Cleaning Rod. At least as long as probe.

6.2.2 Glass Sample Bottles. Leakless, with Teflon-lined caps, 1000 ml.

6.2.3 Petri Dishes. For filter samples, glass or polyethylene, unless otherwise specified by the Administrator.

6.2.4 Graduated Cylinder. 250 ml.

6.2.5 Funnel and Rubber Policeman. To aid in transfer of silica gel to container; not necessary if silica gel is weighed in the field.

6.2.6 Funnel. Glass, to aid in sample recovery.

6.2.7 Plastic Jar. Approximately 300 ml.

6.3 Analysis. The following items are needed for sample analysis:

6.3.1 Atomic Absorption Spectrophotometer. Perkin-Elmer 303, or equivalent, with nitrous oxide/acetylene burner.

6.3.2 Hot Plate.

6.3.3 Perchloric Acid Fume Hood.

## *7.0 Reagents and Standards*

NOTE: Unless otherwise indicated, it is intended that all reagents conform to the specifications established by the Committee on Analytical Reagents of the American Chemical Society, where such specifications are available; otherwise, use the best available grade.

7.1 Sample Collection. Same as Method 5, Section 7.1, including deionized distilled water conforming to ASTM D 1193-77 or 91 (incorporated by reference—see § 61.18), Type 3. The Millipore AA filter is recommended.

7.2 Sample Recovery. Same as Method 5 in appendix A, part 60, Section 7.2, with the addition of the following:

7.2.1 Wash Acid, 50 Percent (V/V) Hydrochloric Acid (HCl). Mix equal volumes of concentrated HCl and water, being careful to add the acid slowly to the water.

7.3 Sample Preparation and Analysis. The following reagents and standards and standards are needed for sample preparation and analysis:

7.3.1 Water. Same as in Section 7.1.

7.3.2. Perchloric Acid ($HClO_4$ ). Concentrated (70 percent V/V).

7.3.3 Nitric Acid ($HNO_3$ ). Concentrated.

7.3.4 Beryllium Powder. Minimum purity 98 percent.

7.3.5 Sulfuric Acid ($H_2$ $SO_4$ ) Solution, 12 N. Dilute 33 ml of concentrated $H_2$ $SO_4$ to 1 liter with water.

7.3.6 Hydrochloric Acid Solution, 25 Percent HCl (V/V).

7.3.7 Stock Beryllium Standard Solution, 10 µg Be/ml. Dissolve 10.0 mg of Be in 80 ml of 12 N $H_2$ $SO_4$ in a 1000-ml volumetric flask. Dilute to volume with water. This solution is stable for at least one month. Equivalent strength Be stock solutions may be prepared from Be salts such as $BeCl_2$ and $Be(NO_3)_2$ (98 percent minimum purity).

7.3.8 Working Beryllium Standard Solution, 1 µg Be/ml. Dilute a 10 ml aliquot of the stock beryllium standard solution to 100 ml with 25 percent HCl solution to give a concentration of 1 mg/ml. Prepare this dilute stock solution fresh daily.

*8.0 Sample Collection, Preservation, Transport, and Storage*

The amount of Be that is collected is generally small, therefore, it is necessary to exercise particular care to prevent contamination or loss of sample.

8.1 Pretest Preparation. Same as Method 5, Section 8.1, except omit Section 8.1.3.

8.2 Preliminary Determinations. Same as Method 5, Section 8.2, with the exception of the following:

8.2.1 Select a nozzle size based on the range of velocity heads to assure that it is not necessary to change the nozzle size in order to maintain isokinetic sampling rates below 28 liters/min (1.0 cfm).

8.2.2 Obtain samples over a period or periods of time that accurately determine the maximum emissions that occur in a 24-hour period. In the case of cyclic operations, perform sufficient sample runs for the accurate determination of the emissions that occur over the duration of the cycle. A minimum sample time of 2 hours per run is recommended.

8.3 Preparation of Sampling Train. Same as Method 5, Section 8.3, with the exception of the following:

8.3.1 Prior to assembly, clean all glassware (probe, impingers, and connectors) by first soaking in wash acid for 2 hours, followed by rinsing with water.

8.3.2 Save a portion of the water for a blank analysis.

8.3.3 Procedures relating to the use of metal probe liners are not applicable.

8.3.4 Probe and filter heating systems are needed only if water condensation is a problem. If this is the case, adjust the heaters to provide a temperature at or above the stack temperature. However, membrane filters such as the Millipore AA are limited to about 107 °C (225 °F). If the stack gas is in excess of about 93 °C (200 °F), consideration should be given to an alternate procedure such as moving the filter holder downstream of the first impinger to insure that the filter does not exceed its temperature limit. After the sampling train has been assembled, turn on and set the probe heating system, if applicable, at the desired operating temperature. Allow time for the temperatures to stabilize. Place crushed ice around the impingers.

NOTE: An empty impinger may be inserted between the third impinger and the silica gel to remove excess moisture from the sample stream.

8.4 Leak Check Procedures, Sampling Train Operation, and Calculation of Percent Isokinetic. Same as Method 5, Sections 8.4, 8.5, and 8.6, respectively.

8.5 Sample Recovery. Same as Method 5, Section 8.7, except treat the sample as follows: Transfer the probe and impinger assembly to a cleanup area that is clean, protected from the wind, and free of Be contamination. Inspect the train before and during this assembly, and note any abnormal conditions. Treat the sample as follows: Disconnect the probe from the impinger train.

8.5.1 Container No. 1. Same as Method 5, Section 8.7.6.1.

8.5.2 Container No. 2. Place the contents (measured to 1 ml) of the first three impingers into a glass sample bottle. Use the procedures outlined in Section 8.7.6.2 of Method 5, where applicable, to rinse the probe nozzle, probe fitting, probe liner, filter holder, and all glassware between the filter holder and the back half of the third impinger with water. Repeat this procedure with acetone. Place both water and acetone rinse solutions in the sample bottle with the contents of the impingers.

8.5.3 Container No. 3. Same as Method 5, Section 8.7.6.3.

8.6 Blanks.

8.6.1 Water Blank. Save a portion of the water as a blank. Take 200 ml directly from the wash bottle being used and place it in a plastic sample container labeled “$H_2$ O blank.”

8.6.2 Filter. Save two filters from each lot of filters used in sampling. Place these filters in a container labeled “filter blank.”

8.7 Post-test Glassware Rinsing. If an additional test is desired, the glassware can be carefully double rinsed with water and reassembled. However, if the glassware is out of use more than 2 days, repeat the initial acid wash procedure.

## *9.0 Quality Control*

| Section | Quality control measure | Effect |
|---|---|---|
| 8.4, 10.1 | Sampling equipment leak checks and calibration | Ensure accuracy and precision of sampling measurements. |
| 10.2 | Spectrophotometer calibration | Ensure linearity of spectrophotometer response to standards. |
| 11.5 | Check for matrix effects | Eliminate matrix effects. |

## *10.0 Calibration and Standardization*

NOTE: Maintain a laboratory log of all calibrations.

10.1 Sampling Equipment. Same as Method 5, Section 10.0.

10.2 Preparation of Standard Solutions. Pipet 1, 3, 5, 8, and 10 ml of the 1.0 µg Be/ml working standard solution into separate 100 ml volumetric flasks, and dilute to the mark with water. The total amounts of Be in these standards are 1, 3, 5, 8, and 10 µg, respectively.

10.3 Spectrophotometer and Recorder. The Be response may be measured by either peak height or peak area. Analyze an aliquot of the 10-µg standard at 234.8 nm using a nitrous oxide/acetylene flame. Determine the maximum absorbance of the standard, and set this value to read 90 percent of the recorder full scale.

10.4 Calibration Curve.

10.4.1 After setting the recorder scale, analyze an appropriately sized aliquot of each standard and the BLANK (see Section 11) until two consecutive peaks agree within 3 percent of their average value.

10.4.3 Subtract the average peak height (or peak area) of the blank—which must be less than 2 percent of recorder full scale—from the averaged peak heights of the standards. If the blank absorbance is greater than 2 percent of full-scale, the probable cause is Be contamination of a reagent or carry-over of Be from a previous sample. Prepare the calibration curve by plotting the corrected peak height of each standard solution versus the corresponding total Be weight in the standard (in µg).

10.5 Spectrophotometer Calibration Quality Control. Calculate the least squares slope of the calibration curve. The line must pass through the origin or through a point no further from the origin than ±2 percent of the recorder full scale. Multiply the corrected peak height by the reciprocal of the least squares slope to determine the distance each calibration point lies from the theoretical calibration line. The difference between the calculated concentration values and the actual concentrations (i.e., 1, 3, 5, 8, and 10 µg Be) must be less than 7 percent for all standards.

*11.0 Analytical Procedure*

11.1 Sample Loss Check. Prior to analysis, check the liquid level in Container No. 2. Note on the analytical data sheet whether leakage occurred during transport. If a noticeable amount of leakage occurred, either void the sample or take steps, subject to the approval of the Administrator, to adjust the final results.

11.2 Glassware Cleaning. Before use, clean all glassware according to the procedure of Section 8.3.1.

11.3 Sample Preparation. The digestion of Be samples is accomplished in part in concentrated $HClO_4$ .

NOTE: The sample must be heated to light brown fumes after the initial HNO3 addition; otherwise, dangerous perchlorates may result from the subsequent $HClO_4$ digestion. $HClO_4$ should be used only under a hood.

11.3.1 Container No. 1. Transfer the filter and any loose particulate matter from Container No. 1 to a 150-ml beaker. Add 35 ml concentrated $HNO_3$ . To oxidize all organic matter, heat on a hotplate until light brown fumes are evident. Cool to room temperature, and add 5 ml 12 N $H_2SO_4$ and 5 ml concentrated $HClO_4$ .

11.3.2 Container No. 2. Place a portion of the water and acetone sample into a 150 ml beaker, and put on a hotplate. Add portions of the remainder as evaporation proceeds and evaporate to dryness. Cool the residue, and add 35 ml concentrated $HNO_3$ . To oxidize all organic matter, heat on a hotplate until light brown fumes are evident. Cool to room temperature, and add 5 ml 12 N $H_2SO_4$ and 5 ml concentrated $HClO_4$ . Then proceed with step 11.3.4.

11.3.3 Final Sample Preparation. Add the sample from Section 11.3.2 to the 150-ml beaker from Section 11.3.1. Replace on a hotplate, and evaporate to dryness in a $HClO_4$ hood. Cool the residue to room temperature, add 10.0 ml of 25 percent V/V HCl, and mix to dissolve the residue.

11.3.4 Filter and Water Blanks. Cut each filter into strips, and treat each filter individually as directed in Section 11.3.1. Treat the 200-ml water blank as directed in Section 11.3.2. Combine and treat these blanks as directed in Section 11.3.3.

11.4 Spectrophotometer Preparation. Turn on the power; set the wavelength, slit width, and lamp current; and adjust the background corrector as instructed by the manufacturer's manual for the particular atomic absorption spectrophotometer. Adjust the burner and flame characteristics as necessary.

11.5 Analysis. Calibrate the analytical equipment and develop a calibration curve as outlined in Sections 10.4 and 10.5.

11.5.1 Beryllium Samples. Repeat the procedure used to establish the calibration curve with an appropriately sized aliquot of each sample (from Section 11.3.3) until two consecutive peak heights agree within 3 percent of their average value. The peak height of each sample must be greater than 10 percent of the recorder full scale. If the peak height of the sample is off scale on the recorder, further dilute the original source sample to bring the Be concentration into the calibration range of the spectrophotometer.

11.5.2 Run a blank and standard at least after every five samples to check the spectrophotometer calibration. The peak height of the blank must pass through a point no further from the origin than ±2 percent of the recorder full scale. The difference between the measured concentration of the standard (the product of the corrected peak height and the reciprocal of the least squares slope) and the actual concentration of the standard must be less than 7 percent, or recalibration of the analyzer is required.

11.5.3 Check for Matrix Effects (optional). Use the Method of Standard Additions (see Reference 2 in Section 16.0) to check at least one sample from each source for matrix effects on the Be results. If the results of the Method of Standard Additions procedure used on the single source sample do not agree to within 5 percent of the value obtained by the routine atomic absorption analysis, then reanalyze all samples from the source using the Method of Standard Additions procedure.

11.6 Container No. 2 (Silica Gel). Weigh the spent silica gel (or silica gel plus impinger) to the nearest 0.5 g using a balance. (This step may be conducted in the field.)

## *12.0 Data Analysis and Calculations*

Carry out calculations, retaining at least one extra decimal significant figure beyond that of the acquired data. Round off figures only after the final calculation. Other forms of the equations may be used as long as they give equivalent results.

12.1 Nomenclature.

$K_1$ = 0.3858 °K/mm Hg for metric units.

= 17.64 °R/in. Hg for English units.

$K_3 = 10^{-6}$ g/µg for metric units.

$= 2.2046 \times 10^{-9}$ lb/µg for English units.

$m_{Be}$ = Total weight of beryllium in the source sample.

$P_s$ = Absolute stack gas pressure, mm Hg (in. Hg).

t = Daily operating time, sec/day.

$T_s$ = Absolute average stack gas temperature, °K (°R).

$V_{m(std)}$ = Dry gas sample volume at standard conditions, scm (scf).

$V_{w(std)}$ = Volume of water vapor at standard conditions, scm (scf).

12.2 Average Dry Gas Meter Temperature and Average Orifice Pressure Drop, Dry Gas Volume, Volume of Water Vapor Condensed, Moisture Content, Isokinetic Variation, and Stack Gas Velocity and Volumetric Flow Rate. Same as Method 5, Sections 12.2 through 12.5, 12.11, and 12.12, respectively.

12.3 Total Beryllium. For each source sample, correct the average maximum absorbance of the two consecutive samples whose peak heights agree within 3 percent of their average for the contribution of the solution blank (see Sections 11.3.4 and 11.5.2). Correcting for any dilutions if necessary, use the calibration curve and these corrected averages to determine the total weight of Be in each source sample.

12.4 Beryllium Emission Rate. Calculate the daily Hg emission rate, R, using Equation 104-1. For continuous operations, the operating time is equal to 86,400 seconds per day. For cyclic operations, use only the time per day each stack is in operation. The total Hg emission rate from a source will be the summation of results from all stacks.

$$\bar{C}_m = \sum_{i=1}^{n} \left[ \frac{mV_s}{V_a\left(W_\beta - W_f\right)} \right]_i \qquad \text{Eq. 105-1}$$

12.5 Determination of Compliance. Each performance test consists of three sample runs. For the purpose of determining compliance with an applicable national emission standard, use the average of the results of all sample runs.

*13.0 Method Performance. [Reserved]*

*14.0 Pollution Prevention. [Reserved]*

*15.0 Waste Management. [Reserved]*

*16.0 References*

Same as References 1, 2, and 4-11 of Section 16.0 of Method 101 with the addition of the following:

1. Amos, M.D., and J.B. Willis. Use of High-Temperature Pre-Mixed Flames in Atomic Absorption Spectroscopy. Spectrochim. Acta. 22:1325. 1966.

2. Fleet, B., K.V. Liberty, and T. S. West. A Study of Some Matrix Effects in the Determination of Beryllium by Atomic Absorption Spectroscopy in the Nitrous Oxide-Acetylene Flame. Talanta 17:203. 1970.

*17.0 Tables, Diagrams, Flowcharts, And Validation Data [Reserved]*

Method 105—Determination of Mercury in Wastewater Treatment Plant Sewage Sludges

NOTE: This method does not include all of the specifications ( *e.g.,* equipment and supplies) and procedures ( *e.g.,* sampling and analytical) essential to its performance. Some material is incorporated by reference from other methods in this part. Therefore, to obtain reliable results, persons using this method should also have a thorough knowledge of at least the following additional test methods: Method 101 and Method 101A.

*1.0 Scope and Application*

1.1 Analytes.

| Analyte | CAS No. | Sensitivity |
|---|---|---|
| Mercury (Hg) | 7439-97-6 | Dependent upon spectrophotometer and recorder. |

1.2 Applicability. This method is applicable for the determination of total organic and inorganic Hg content in sewage sludges.

1.3 Data Quality Objectives. Adherence to the requirements of this method will enhance the quality of the data obtained from air pollutant sampling methods.

*2.0 Summary of Method*

2.1 Time-composite sludge samples are withdrawn from the conveyor belt subsequent to dewatering and before incineration or drying. A weighed portion of the sludge is digested in aqua regia and is oxidized by potassium permanganate ($KMnO_4$ ). Mercury in the digested sample is then measured by the conventional spectrophotometric cold-vapor technique.

*3.0 Definitions [Reserved]*

*4.0 Interferences [Reserved]*

*5.0 Safety*

5.1 Disclaimer. This method may involve hazardous materials, operations, and equipment. This test method may not address all of the safety problems associated with its use. It is the responsibility of the user of this test method to establish appropriate safety and health practices and determine the applicability of regulatory limitations prior to performing this test method.

5.2 Corrosive Reagents. The following reagents are hazardous. Personal protective equipment and safe procedures are useful in preventing chemical splashes. If contact occurs, immediately flush with copious amounts of water at least 15 minutes. Remove clothing under shower and decontaminate. Treat residual chemical burn as thermal burn.

5.2.1 Hydrochloric Acid (HCl). Highly toxic. Vapors are highly irritating to eyes, skin, nose, and lungs, causing severe damage. May cause bronchitis, pneumonia, or edema of lungs. Exposure to concentrations of 0.13 to 0.2 percent can be lethal to humans in a few minutes. Provide ventilation to limit exposure. Reacts with metals, producing hydrogen gas.

5.2.2 Nitric Acid ($HNO_3$ ). Highly corrosive to eyes, skin, nose, and lungs. Vapors cause bronchitis, pneumonia, or edema of lungs. Reaction to inhalation may be delayed as long as 30 hours and still be fatal. Provide ventilation to limit exposure. Strong oxidizer. Hazardous reaction may occur with organic materials such as solvents.

*6.0 Equipment and Supplies*

6.1 Sample Collection and Mixing. The following items are required for collection and mixing of the sludge samples:

6.1.1 Container. Plastic, 50-liter.

6.1.2 Scoop. To remove 950-ml (1 quart.) sludge sample.

6.1.3 Mixer. Mortar mixer, wheelbarrow-type, 57-liter (or equivalent) with electricity-driven motor.

6.1.4 Blender. Waring-type, 2-liter.

6.1.5 Scoop. To remove 100-ml and 20-ml samples of blended sludge.

6.1.6 Erlenmeyer Flasks. Four, 125-ml.

6.1.7 Beakers. Glass beakers in the following sizes: 50 ml (1), 200 ml (1), 400 ml (2).

6.2 Sample Preparation and Analysis. Same as Method 101, Section 6.3, with the addition of the following:

6.2.1 Hot Plate.

6.2.2 Desiccator.

6.2.3 Filter Paper. S and S No. 588 (or equivalent).

6.2.4 Beakers. Glass beakers, 200 ml and 400 ml (2 each).

*7.0 Reagents and Standards*

NOTE: Unless otherwise indicated, it is intended that all reagents conform to the specifications established by the Committee on Analytical Reagents of the American Chemical Society, where such specifications are available; otherwise, use the best available grade.

7.1 Sample Analysis. Same as Method 101A, Section 7.2, with the following additions and exceptions:

7.1.1 Hydrochloric Acid. The concentrated HCl specified in Method 101A, Section 7.2.4, is not required.

7.1.2 Aqua Regia. Prepare immediately before use. Carefully add one volume of concentrated $HNO_3$ to three volumes of concentrated HCl.

*8.0 Sample Collection, Preservation, Storage, and Transport*

8.1 Sludge Sampling. Withdraw equal volume increments of sludge [for a total of at least 15 liters (16 quarts)] at intervals of 30 min over an 8-hr period, and combine in a rigid plastic container.

8.2 Sludge Mixing. Transfer the entire 15-liter sample to a mortar mixer. Mix the sample for a minimum of 30 min at 30 rpm. Take six 100-ml portions of sludge, and combine in a 2-liter blender. Blend sludge for 5 min; add water as necessary to give a fluid consistency. Immediately after stopping the blender, withdraw four 20-ml portions of blended sludge, and place them in separate, tared 125-ml Erlenmeyer flasks. Reweigh each flask to determine the exact amount of sludge added.

8.3 Sample Holding Time. Samples shall be analyzed within the time specified in the applicable subpart of the regulations.

*9.0 Quality Control*

| Section | Quality control measure | Effect |
|---|---|---|
| 10.0 | Spectrophotometer calibration | Ensure linearity of spectrophotometer response to standards. |
| 11.0 | Check for matrix effects | Eliminate matrix effects. |

*10.0 Calibration and Standardization*

Same as Method 101A, Section 10.2.

*11.0 Analytical Procedures*

11.1 Solids Content of Blended Sludge. Dry one of the 20-ml blended samples from Section 8.2 in an oven at 105 °C (221 °F) to constant weight. Cool in a desiccator, weigh and record the dry weight of the sample.

11.2 Aqua Regia Digestion of Blended Samples.

11.2.1 To each of the three remaining 20-ml samples from Section 8.2 add 25 ml of aqua regia, and digest the on a hot plate at low heat (do not boil) for 30 min, or until samples are a pale yellow-brown color and are void of the dark brown color characteristic of organic matter. Remove from hotplate and allow to cool.

11.2.2 Filter each digested sample separately through an S and S No. 588 filter or equivalent, and rinse the filter contents with 50 ml of water. Transfer the filtrate and filter washing to a 100-ml volumetric flask, and carefully dilute to volume with water.

11.3 Solids Content of the Sludge Before Blending. Remove two 100-ml portions of mixed sludge from the mortar mixer and place in separate, tared 400-ml beakers. Reweigh each beaker to determine the exact amount of sludge added. Dry in oven at 105 °C (221 °F) and cool in a desiccator to constant weight.

11.4 Analysis for Mercury. Analyze the three aqua regia-digested samples using the procedures outlined in Method 101A, Section 11.0.

## *12.0 Data Analysis and Calculations*

12.1 Nomenclature.

$C_m$ = Concentration of Hg in the digested sample, µg/g.

$F_{sb}$ = Weight fraction of solids in the blended sludge.

$F_{sm}$ = Weight fraction of solids in the collected sludge after mixing.

M = Hg content of the sewage sludge (on a dry basis), µg/g.

m = Mass of Hg in the aliquot of digested sample analyzed, µg.

n = number of digested samples (specified in Section 11.2 as three).

$V_a$ = Volume of digested sample analyzed, ml.

$V_s$ = Volume of digested sample, ml.

$W_b$ = Weight of empty sample beaker, g.

$W_{bs}$ = Weight of sample beaker and sample, g.

$W_{bd}$ = Weight of sample beaker and sample after drying, g.

$W_f$ = Weight of empty sample flask, g.

$W_{fd}$ = Weight of sample flask and sample after drying, g.

$W_{fs}$ = Weight of sample flask and sample, g.

12.2 Mercury Content of Digested Sample (Wet Basis).

12.2.1 For each sample analyzed for Hg content, calculate the arithmetic mean maximum absorbance of the two consecutive samples whose peak heights agree ±3 percent of their average. Correct this average value for the contribution of the blank. Use the calibration curve and these corrected averages to determine the final Hg concentration in the solution cell for each sludge sample.

12.2.2 Calculate the average Hg concentration of the digested samples by correcting for any dilutions made to bring the sample into the working range of the spectrophotometer and for the weight of the sludge portion digested, using Equation 105-1.

$$\bar{C}_m = \sum_{i=1}^{n} \left[ \frac{mV_s}{V_a \left( W_{fs} - W_f \right)} \right]_i \qquad \text{Eq. 105-1}$$

12.3 Solids Content of Blended Sludge. Determine the solids content of the blended sludge using Equation 105-2.

$$F_{sb} = 1 - \frac{W_{fs} - W_{fd}}{W_{fs} - W_f} \qquad \text{Eq. 105-2}$$

12.4 Solids Content of Bulk Sample (before blending but, after mixing in mortar mixer). Determine the solids content of each 100 ml aliquot (Section 11.3), and average the results.

$$F_{sm} = 1 - \frac{W_{bs} - W_{bd}}{W_{bs} - W_b} \qquad \text{Eq. 105-3}$$

12.5 Mercury Content of Bulk Sample (Dry Basis). Average the results from the three samples from each 8-hr composite sample, and calculate the Hg concentration of the composite sample on a dry basis.

$$M = \frac{\bar{C}_m}{F_{sb}} \qquad \text{Eq. 105-4}$$

## *13.0 Method Performance*

13.1 Range. The range of this method is 0.2 to 5 micrograms per gram; it may be extended by increasing or decreasing sample size.

## *14.0 Pollution Prevention. [Reserved]*

## *15.0 Waste Management. [Reserved]*

## *16.0 References*

1. Bishop, J.N. Mercury in Sediments. Ontario Water Resources Commission. Toronto, Ontario, Canada. 1971.

2. Salma, M. Private Communication. EPA California/Nevada Basin Office. Alameda, California.

3. Hatch, W.R. and W.L. Ott. Determination of Sub-Microgram Quantities of Mercury by Atomic Absorption Spectrophotometry. Analytical Chemistry. 40:2085. 1968.

4. Bradenberger, H., and H. Bader. The Determination of Nanogram Levels of Mercury in Solution by a Flameless Atomic Absorption Technique. Atomic Absorption Newsletter. 6:101. 1967.

5. Analytical Quality Control Laboratory (AQCL). Mercury in Sediment (Cold Vapor Technique) (Provisional Method). U.S. Environmental Protection Agency. Cincinnati, Ohio. April 1972.

6. Kopp, J.F., M.C. Longbottom, and L.B. Lobring. “Cold Vapor” Method for Determining Mercury. Journal AWWA. 64(1):20-25. 1972.

7. Manual of Methods for Chemical Analysis of Water and Wastes. U.S. Environmental Protection Agency. Cincinnati, Ohio. Publication No. EPA-624/2-74-003. December 1974. pp. 118-138.

8. Mitchell, W.J., M.R. Midgett, J. Suggs, R.J. Velton, and D. Albrink. Sampling and Homogenizing Sewage for Analysis. Environmental Monitoring and Support Laboratory, Office of Research and Development, U.S. Environmental Protection Agency. Research Triangle Park, N.C. March 1979. p. 7.

*17.0 Tables, Diagrams, Flowcharts, and Validation Data. [Reserved]*

Method 106—Determination of Vinyl Chloride Emissions From Stationary Sources

*1.0 Scope and Application*

1.1 Analytes.

| Analyte | CAS No. | Sensitivity |
|---|---|---|
| Vinyl Chloride (CH2:CHCl) | 75-01-4 | Dependent upon analytical equipment. |

1.2 Applicability. This method is applicable for the determination of vinyl chloride emissions from ethylene dichloride, vinyl chloride, and polyvinyl chloride manufacturing processes. This method does not measure vinyl chloride contained in particulate matter.

1.3 Data Quality Objectives. Adherence to the requirements of this method will enhance the quality of the data obtained from air pollutant sampling methods.

*2.0 Summary of Method*

2.1 An integrated bag sample of stack gas containing vinyl chloride is subjected to GC analysis using a flame ionization detector (FID).

*3.0 Definitions. [Reserved]*

*4.0 Interferences*

4.1 Resolution interferences of vinyl chloride may be encountered on some sources. Therefore, the chromatograph operator should select the column and operating parameters best suited to the particular analysis requirements. The selection made is subject to approval of the Administrator. Approval is automatic, provided that confirming data are produced through an adequate supplemental analytical technique, and that the data are available for review by the Administrator. An example of this would be analysis with a different column or GC/mass spectroscopy.

*5.0 Safety*

5.1 Disclaimer. This method may involve hazardous materials, operations, and equipment. This test method may not address all of the safety problems associated with its use. It is the responsibility of the user of this test method to establish appropriate safety and health practices and determine the applicability of regulatory limitations prior to performing this test method.

5.2 Toxic Analyte. Care must be exercised to prevent exposure of sampling personnel to vinyl chloride, which is a carcinogen.

*6.0 Equipment and Supplies*

6.1 Sample Collection (see Figure 106-1). The sampling train consists of the following components:

6.1.1 Probe. Stainless steel, borosilicate glass, Teflon tubing (as stack temperature permits), or equivalent, equipped with a glass wool plug to remove particulate matter.

6.1.2 Sample Lines. Teflon, 6.4-mm outside diameter, of sufficient length to connect probe to bag. Use a new unused piece for each series of bag samples that constitutes an emission test, and discard upon completion of the test.

6.1.3 Quick Connects. Stainless steel, male (2) and female (2), with ball checks (one pair without), located as shown in Figure 106-1.

6.1.4 Tedlar Bags. 50- to 100-liter capacity, to contain sample. Aluminized Mylar bags may be used if the samples are analyzed within 24 hours of collection.

6.1.5 Bag Containers. Rigid leak-proof containers for sample bags, with covering to protect contents from sunlight.

6.1.6 Needle Valve. To adjust sample flow rates.

6.1.7 Pump. Leak-free, with minimum of 2-liter/min capacity.

6.1.8 Charcoal Tube. To prevent admission of vinyl chloride and other organics to the atmosphere in the vicinity of samplers.

6.1.9 Flowmeter. For observing sampling flow rate; capable of measuring a flow range from 0.10 to 1.00 liter/min.

6.1.10 Connecting Tubing. Teflon, 6.4-mm outside diameter, to assemble sampling train (Figure 106-1).

6.1.11 Tubing Fittings and Connectors. Teflon or stainless steel, to assemble sampling training.

6.2 Sample Recovery. Teflon tubing, 6.4-mm outside diameter, to connect bag to GC sample loop. Use a new unused piece for each series of bag samples that constitutes an emission test, and discard upon conclusion of analysis of those bags.

6.3 Analysis. The following equipment is required:

6.3.1 Gas Chromatograph. With FID potentiometric strip chart recorder and 1.0 to 5.0-ml heated sampling loop in automatic sample valve. The chromatographic system shall be capable of producing a response to 0.1-ppmv vinyl chloride that is at least as great as the average noise level. (Response is measured from the average value of the base line to the maximum of the wave form, while standard operating conditions are in use.)

6.3.2 Chromatographic Columns. Columns as listed below. Other columns may be used provided that the precision and accuracy of the analysis of vinyl chloride standards are not impaired and that information is available for review confirming that there is adequate resolution of vinyl chloride peak. (Adequate resolution is defined as an area overlap of not more than 10 percent of the vinyl chloride peak by an interferent peak. Calculation of area overlap is explained in Procedure 1 of appendix C to this part: “Determination of Adequate Chromatographic Peak Resolution.”)

6.3.2.1 Column A. Stainless steel, 2.0 m by 3.2 mm, containing 80/100-mesh Chromasorb 102.

6.3.2.2 Column B. Stainless steel, 2.0 m by 3.2 mm, containing 20 percent GE SF-96 on 60/ip-mesh Chromasorb P AW; or stainless steel, 1.0 m by 3.2 mm containing 80/100-mesh Porapak T. Column B is required as a secondary column if acetaldehyde is present. If used, column B is placed after column A. The combined columns should be operated at 120 °C (250 °F).

6.3.3 Rate Meters (2). Rotameter , or equivalent, 100-ml/min capacity, with flow control valves.

6.3.4 Gas Regulators. For required gas cylinders.

6.3.5 Temperature Sensor. Accurate to ±1 °C (±2 °F), to measure temperature of heated sample loop at time of sample injection.

6.3.6 Barometer. Accurate to ±5 mm Hg, to measure atmospheric pressure around GC during sample analysis.

6.3.7 Pump. Leak-free, with minimum of 100-ml/min capacity.

6.3.8 Recorder. Strip chart type, optionally equipped with either disc or electronic integrator.

6.3.9 Planimeter. Optional, in place of disc or electronic integrator on recorder, to measure chromatograph peak areas.

6.4 Calibration and Standardization.

6.4.1 Tubing. Teflon, 6.4-mm outside diameter, separate pieces marked for each calibration concentration.

NOTE: The following items are required only if the optional standard gas preparation procedures (Section 10.1) are followed.

6.4.2 Tedlar Bags. Sixteen-inch-square size, with valve; separate bag marked for each calibration concentration.

6.4.3 Syringes. 0.5-ml and 50-µl, gas tight, individually calibrated to dispense gaseous vinyl chloride.

6.4.4 Dry Gas Meter with Temperature and Pressure Gauges. Singer Model DTM-115 with 802 index, or equivalent, to meter nitrogen in preparation of standard gas mixtures, calibrated at the flow rate used to prepare standards.

## *7.0 Reagents and Standards*

7.1 Analysis. The following reagents are required for analysis.

7.1.1 Helium or Nitrogen. Purity 99.9995 percent or greater, for chromatographic carrier gas.

7.1.2 Hydrogen. Purity 99.9995 percent or greater.

7.1.3 Oxygen or Air. Either oxygen (purity 99.99 percent or greater) or air (less than 0.1 ppmv total hydrocarbon content), as required by detector.

7.2 Calibration. Use one of the following options: either Sections 7.2.1 and 7.2.2, or Section 7.2.3.

7.2.1 Vinyl Chloride. Pure vinyl chloride gas certified by the manufacturer to contain a minimum of 99.9 percent vinyl chloride. If the gas manufacturer maintains a bulk cylinder supply of 99.9+ percent vinyl chloride, the certification analysis may have been performed on this supply, rather than on each gas cylinder prepared from this bulk supply. The date of gas cylinder preparation and the certified analysis must have been affixed to the cylinder before shipment from the gas manufacturer to the buyer.

7.2.2 Nitrogen. Same as described in Section 7.1.1.

7.2.3 Cylinder Standards. Gas mixture standards (50-,10-, and 5 ppmv vinyl chloride) in nitrogen cylinders may be used to directly prepare a chromatograph calibration curve as described in Section 10.3 if the following conditions are met: (a) The manufacturer certifies the gas composition with an accuracy of ±3 percent or better. (b) The manufacturer recommends a maximum shelf life over which the gas concentration does not change by greater than

±5 percent from the certified value. (c) The manufacturer affixes the date of gas cylinder preparation, certified vinyl chloride concentration, and recommended maximum shelf to the cylinder before shipment to the buyer.

7.2.3.1 Cylinder Standards Certification. The manufacturer shall certify the concentration of vinyl chloride in nitrogen in each cylinder by (a) directly analyzing each cylinder and (b) calibrating his analytical procedure on the day of cylinder analysis. To calibrate his analytical procedure, the manufacturer shall use as a minimum, a three point calibration curve. It is recommended that the manufacturer maintain (1) a high concentration calibration standard (between 50 and 100 ppmv) to prepare his calibration curve by an appropriate dilution technique and (2) a low-concentration calibration standard (between 5 and 10 ppmv) to verify the dilution technique used. If the difference between the apparent concentration read from the calibration curve and the true concentration assigned to the low-concentration calibration standard exceeds 5 percent of the true concentration, the manufacturer shall determine the source of error and correct it, then repeat the three-point calibration.

7.2.3.2 Verification of Manufacturer's Calibration Standards. Before using a standard, the manufacturer shall verify each calibration standard (a) by comparing it to gas mixtures prepared (with 99 mole percent vinyl chloride) in accordance with the procedure described in Section 7.2.1 or (b) calibrating it against vinyl chloride cylinder Standard Reference Materials (SRM's) prepared by the National Institute of Standards and Technology, if such SRM's are available. The agreement between the initially determined concentration value and the verification concentration value must be ±5 percent. The manufacturer must reverify all calibration standards on a time interval consistent with the shelf life of the cylinder standards sold.

## *8.0 Sample Collection, Preservation, Storage, and Transport*

NOTE: Performance of this method should not be attempted by persons unfamiliar with the operation of a gas chromatograph (GC) nor by those who are unfamiliar with source sampling, because knowledge beyond the scope of this presentation is required.

8.1 Bag Leak-Check. The following leak-check procedure is recommended, but not required, prior to sample collection. The post-test leak-check procedure is mandatory. Connect a water manometer and pressurize the bag to 5 to 10 cm $H_2O$ (2 to 4 in. $H_2O$). Allow to stand for 10 min. Any displacement in the water manometer indicates a leak. Also, check the rigid container for leaks in this manner.

NOTE: An alternative leak-check method is to pressurize the bag to 5 to 10 cm H2O and allow it to stand overnight. A deflated bag indicates a leak. For each sample bag in its rigid container, place a rotameter in line between the bag and the pump inlet. Evacuate the bag. Failure of the rotameter to register zero flow when the bag appears to be empty indicates a leak.

8.2 Sample Collection. Assemble the sample train as shown in Figure 106-1. Join the quick connects as illustrated, and determine that all connection between the bag and the probe are tight. Place the end of the probe at the centroid of the stack and start the pump with the needle valve adjusted to yield a flow that will fill over 50 percent of bag volume in the specific sample period. After allowing sufficient time to purge the line several times, change the vacuum line from the container to the bag and evacuate the bag until the rotameter indicates no flow. Then reposition the sample and vacuum lines and begin the actual sampling, keeping the rate proportional to the stack velocity. At all times, direct the gas exiting the rotameter away from sampling personnel. At the end of the sample period, shut off the pump, disconnect the sample line from the bag, and disconnect the vacuum line from the bag container. Protect the bag container from sunlight.

8.3 Sample Storage. Keep the sample bags out of direct sunlight. When at all possible, analysis is to be performed within 24 hours, but in no case in excess of 72 hours of sample collection. Aluminized Mylar bag samples must be analyzed within 24 hours.

8.4 Post-test Bag Leak-Check. Subsequent to recovery and analysis of the sample, leak-check the sample bag according to the procedure outlined in Section 8.1.

*9.0 Quality Control*

| Section | Quality control measure | Effect |
|---|---|---|
| 10.3 | Chromatograph calibration | Ensure precision and accuracy of chromatograph. |

*10.0 Calibration and Standardization*

NOTE: Maintain a laboratory log of all calibrations.

10.1 Preparation of Vinyl Chloride Standard Gas Mixtures. (Optional Procedure-delete if cylinder standards are used.) Evacuate a 16-inch square Tedlar bag that has passed a leak-check (described in Section 8.1) and meter in 5.0 liters of nitrogen. While the bag is filling, use the 0.5-ml syringe to inject 250 µl of 99.9+ percent vinyl chloride gas through the wall of the bag. Upon withdrawing the syringe, immediately cover the resulting hole with a piece of adhesive tape. The bag now contains a vinyl chloride concentration of 50 ppmv. In a like manner use the 50 µl syringe to prepare gas mixtures having 10-and 5-ppmv vinyl chloride concentrations. Place each bag on a smooth surface and alternately depress opposite sides of the bag 50 times to further mix the gases. These gas mixture standards may be used for 10 days from the date of preparation, after which time new gas mixtures must be prepared. (Caution: Contamination may be a problem when a bag is reused if the new gas mixture standard is a lower concentration than the previous gas mixture standard.)

10.2 Determination of Vinyl Chloride Retention Time. (This section can be performed simultaneously with Section 10.3.) Establish chromatograph conditions identical with those in Section 11.3. Determine proper attenuator position. Flush the sampling loop with helium or nitrogen and activate the sample valve. Record the injection time, sample loop temperature, column temperature, carrier gas flow rate, chart speed, and attenuator setting. Record peaks and detector responses that occur in the absence of vinyl chloride. Maintain conditions with the equipment plumbing arranged identically to Section 11.2, and flush the sample loop for 30 seconds at the rate of 100 ml/min with one of the vinyl chloride calibration mixtures. Then activate the sample valve. Record the injection time. Select the peak that corresponds to vinyl chloride. Measure the distance on the chart from the injection time to the time at which the peak maximum occurs. This quantity divided by the chart speed is defined as the retention time. Since other organics may be present in the sample, positive identification of the vinyl chloride peak must be made.

10.3 Preparation of Chromatograph Calibration Curve. Make a GC measurement of each gas mixture standard (described in Section 7.2.3 or 10.1) using conditions identical to those listed in Sections 11.2 and 11.3. Flush the sampling loop for 30 seconds at the rate of 100 ml/min with one of the standard mixtures, and activate the sample valve. Record the concentration of vinyl chloride injected ($C_c$ ), attenuator setting, chart speed, peak area, sample loop temperature, column temperature, carrier gas flow rate, and retention time. Record the barometric pressure. Calculate $A_c$ , the peak area multiplied by the attenuator setting. Repeat until two consecutive injection areas are within 5 percent, then plot the average of those two values versus $C_c$ . When the other standard gas mixtures have been similarly analyzed and plotted, draw a straight line through the points derived by the least squares method. Perform calibration daily, or before and after the analysis of each emission test set of bag samples, whichever is more frequent. For each group of sample analyses, use the average of the two calibration curves which bracket that group to determine the respective sample concentrations. If the two calibration curves differ by more than 5 percent from their mean value, then report the final results by both calibration curves.

*11.0 Analytical Procedure*

11.2 Sample Recovery. With a new piece of Teflon tubing identified for that bag, connect a bag inlet valve to the gas chromatograph sample valve. Switch the valve to receive gas from the bag through the sample loop. Arrange the equipment so the sample gas passes from the sample valve to 100-ml/min rotameter with flow control valve followed by a charcoal tube and a 1-in. $H_2O$ pressure gauge. Maintain the sample flow either by a vacuum pump or container pressurization if the collection bag remains in the rigid container. After sample loop purging is ceased, allow the pressure gauge to return to zero before activating the gas sampling valve.

11.3 Analysis.

11.3.1 Set the column temperature to 100 °C (210 °F) and the detector temperature to 150 °C (300 °F). When optimum hydrogen and oxygen (or air) flow rates have been determined, verify and maintain these flow rates during all chromatography operations. Using helium or nitrogen as the carrier gas, establish a flow rate in the range

consistent with the manufacturer's requirements for satisfactory detector operation. A flow rate of approximately 40 ml/min should produce adequate separations. Observe the base line periodically and determine that the noise level has stabilized and that base line drift has ceased. Purge the sample loop for 30 seconds at the rate of 100 ml/min, shut off flow, allow the sample loop pressure to reach atmospheric pressure as indicated by the $H_2O$ manometer, then activate the sample valve. Record the injection time (the position of the pen on the chart at the time of sample injection), sample number, sample loop temperature, column temperature, carrier gas flow rate, chart speed, and attenuator setting. Record the barometric pressure. From the chart, note the peak having the retention time corresponding to vinyl chloride as determined in Section 10.2. Measure the vinyl chloride peak area, $A_m$ , by use of a disc integrator, electronic integrator, or a planimeter. Measure and record the peak heights, $H_m$ . Record $A_m$ and retention time. Repeat the injection at least two times or until two consecutive values for the total area of the vinyl chloride peak agree within 5 percent of their average. Use the average value for these two total areas to compute the bag concentration.

11.3.2 Compare the ratio of $H_m$ to $A_m$ for the vinyl chloride sample with the same ratio for the standard peak that is closest in height. If these ratios differ by more than 10 percent, the vinyl chloride peak may not be pure (possibly acetaldehyde is present) and the secondary column should be employed (see Section 6.3.2.2).

11.4 Determination of Bag Water Vapor Content. Measure the ambient temperature and barometric pressure near the bag. From a water saturation vapor pressure table, determine and record the water vapor content of the bag, $B_{wb}$ , as a decimal figure. (Assume the relative humidity to be 100 percent unless a lesser value is known.)

*12.0 Calculations and Data Analysis*

12.1 Nomenclature.

$A_m$ = Measured peak area.

$A_f$ = Attenuation factor.

$B_{wb}$ = Water vapor content of the bag sample, as analyzed, volume fraction.

$C_b$ = Concentration of vinyl chloride in the bag, ppmv.

$C_c$ = Concentration of vinyl chloride in the standard sample, ppmv.

$P_i$ = Laboratory pressure at time of analysis, mm Hg.

$P_r$ = Reference pressure, the laboratory pressure recorded during calibration, mm Hg.

$T_i$ = Absolute sample loop temperature at the time of analysis, °K (°R).

$T_r$ = Reference temperature, the sample loop temperature recorded during calibration, °K (°R).

12.2 Sample Peak Area. Determine the sample peak area, $A_c$ , as follows:

$$A_c = A_m A_f \qquad \text{Eq. 106-1}$$

12.3 Vinyl Chloride Concentration. From the calibration curves prepared in Section 10.3, determine the average concentration value of vinyl chloride, $C_c$ , that corresponds to $A_c$ , the sample peak area. Calculate the concentration of vinyl chloride in the bag, $C_b$ , as follows:

$$C_b = \frac{C_c P_r T_i}{P_i T_r \left(1 - B_{wb}\right)} \qquad \text{Eq. 106-2}$$

## *13.0 Method Performance*

13.1 Analytical Range. This method is designed for the 0.1 to 50 parts per million by volume (ppmv) range. However, common gas chromatograph (GC) instruments are capable of detecting 0.02 ppmv vinyl chloride. With proper calibration, the upper limit may be extended as needed.

## *14.0 Pollution Prevention, [Reserved]*

## *15.0 Waste Management, [Reserved]*

## *16.0 References*

1. Brown D.W., E.W. Loy, and M.H. Stephenson. Vinyl Chloride Monitoring Near the B. F. Goodrich Chemical Company in Louisville, KY. Region IV, U.S. Environmental Protection Agency, Surveillance and Analysis Division, Athens, GA. June 24, 1974.

2. G.D. Clayton and Associates. Evaluation of a Collection and Analytical Procedure for Vinyl Chloride in Air. U.S. Environmental Protection Agency, Research Triangle Park, N.C. EPA Contract No. 68-02-1408, Task Order No. 2, EPA Report No. 75-VCL-1. December 13, 1974.

3. Midwest Research Institute. Standardization of Stationary Source Emission Method for Vinyl Chloride. U.S. Environmental Protection Agency, Research Triangle Park, N.C. Publication No. EPA-600/4-77-026. May 1977.

4. Scheil, G. and M.C. Sharp. Collaborative Testing of EPA Method 106 (Vinyl Chloride) that Will Provide for a Standardized Stationary Source Emission Measurement Method. U.S. Environmental Protection Agency, Research Triangle Park, N.C. Publication No. EPA 600/4-78-058. October 1978.

*17.0 Tables, Diagrams Flowcharts, and Validation Data.*

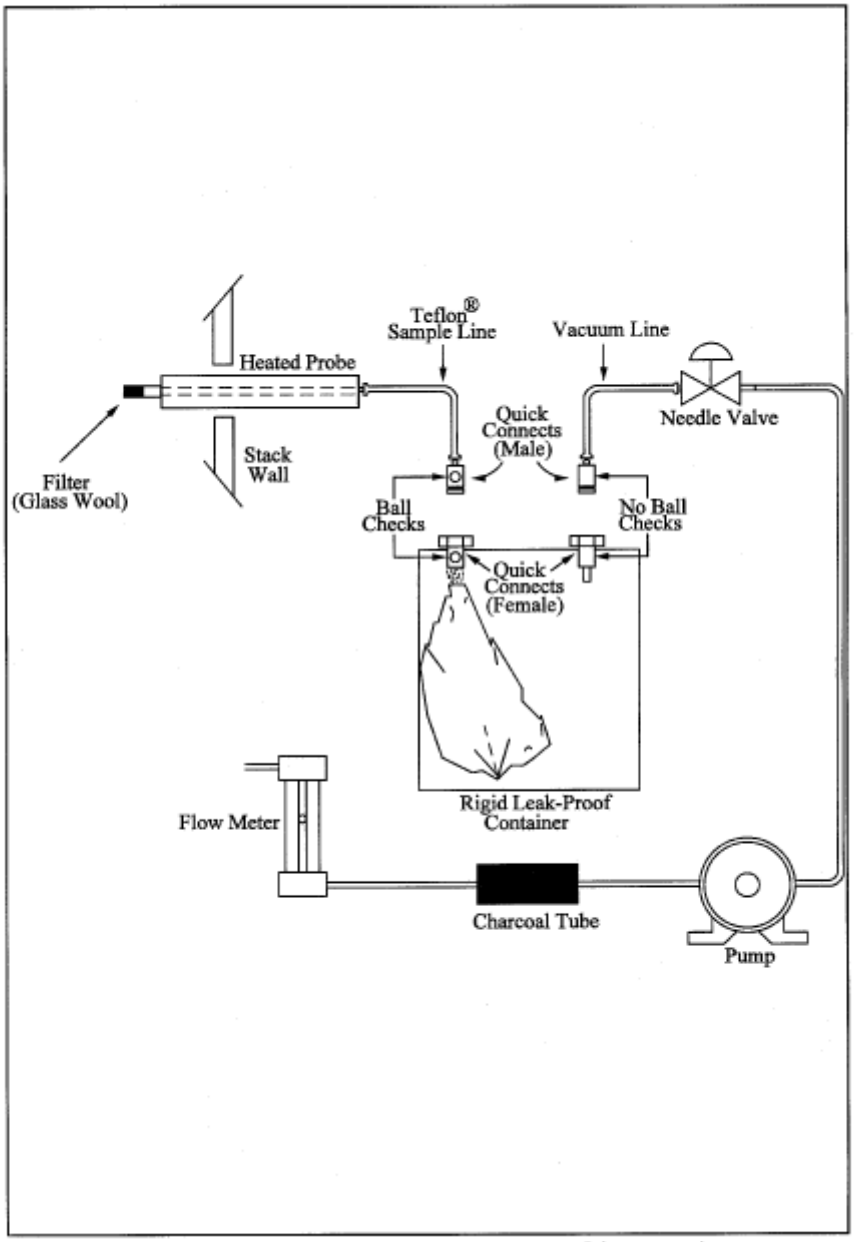


Figure 106-1. Integrated-bag sampling train.

Method 107—Determination of Vinyl Chloride Content of In-Process Wastewater Samples, and Vinyl Chloride Content of Polyvinyl Chloride Resin Slurry, Wet Cake, and Latex Samples

NOTE: Performance of this method should not be attempted by persons unfamiliar with the operation of a gas chromatograph (GC) nor by those who are unfamiliar with source sampling, because knowledge beyond the scope of this presentation is required. This method does not include all of the specifications ( *e.g.,* equipment and supplies) and procedures ( *e.g.,* sampling and analytical) essential to its performance. Some material is incorporated by reference from other methods in this part. Therefore, to obtain reliable results, persons using this method should have a thorough knowledge of at least the following additional test methods: Method 106.

*1.0 Scope and Application*

1.1 Analytes.

| Analyte | CAS No. | Sensitivity |
|---|---|---|
| Vinyl Chloride ($CH_2$:CHCl) | 75-01-4 | Dependent upon analytical equipment. |

1.2 Applicability. This method is applicable for the determination of the vinyl chloride monomer (VCM) content of in-process wastewater samples, and the residual vinyl chloride monomer (RCVM) content of polyvinyl chloride (PVC) resins, wet, cake, slurry, and latex samples. It cannot be used for polymer in fused forms, such as sheet or cubes. This method is not acceptable where methods from section 304(h) of the Clean Water Act, 33 U.S.C. 1251 *et seq.* (the Federal Water Pollution Control Amendments of 1972 as amended by the Clean Water Act of 1977) are required.

1.3 Data Quality Objectives. Adherence to the requirements of this method will enhance the quality of the data obtained from air pollutant sampling methods.

*2.0 Summary of Method*

2.1 The basis for this method relates to the vapor equilibrium that is established at a constant known temperature in a closed system between RVCM, PVC resin, water, and air. The RVCM in a PVC resin will equilibrate rapidly in a closed vessel, provided that the temperature of the PVC resin is maintained above the glass transition temperature of that specific resin.

2.2 A sample of PVC or in-process wastewater is collected in a vial or bottle and is conditioned. The headspace in the vial or bottle is then analyzed for vinyl chloride using gas chromatography with a flame ionization detector.

*3.0 Definitions [Reserved]*

*4.0 Interferences*

4.1 The chromatograph columns and the corresponding operating parameters herein described normally provide an adequate resolution of vinyl chloride; however, resolution interferences may be encountered on some sources. Therefore, the chromatograph operator shall select the column and operating parameters best suited to his particular analysis requirements, subject to the approval of the Administrator. Approval is automatic provided that confirming data are produced through an adequate supplemental analytical technique, such as analysis with a different column or GC/mass spectroscopy, and that these data are made available for review by the Administrator.

*5.0 Safety*

5.1 Disclaimer. This method may involve hazardous materials, operations, and equipment. This test method may not address all of the safety problems associated with its use. It is the responsibility of the user of this test method to establish appropriate safety and health practices and determine the applicability of regulatory limitations prior to performing this test method.

5.2 Toxic Analyte. Care must be exercised to prevent exposure of sampling personnel to vinyl chloride, which is a carcinogen. Do not release vinyl chloride to the laboratory atmosphere during preparation of standards. Venting or purging with VCM/air mixtures must be held to a minimum. When they are required, the vapor must be routed to outside air. Vinyl chloride, even at low ppm levels, must never be vented inside the laboratory. After vials have been analyzed, the gas must be vented prior to removal of the vial from the instrument turntable. Vials must be vented through a hypodermic needle connected to an activated charcoal tube to prevent release of vinyl chloride into the laboratory atmosphere. The charcoal must be replaced prior to vinyl chloride breakthrough.

*6.0 Equipment and Supplies*

6.1 Sample Collection. The following equipment is required:

6.1.1 Glass bottles. 60-ml (2-oz) capacity, with wax-lined screw-on tops, for PVC samples.

6.1.2 Glass Vials. Headspace vials, with Teflon-faced butyl rubber sealing discs, for water samples.

6.1.3 Adhesive Tape. To prevent loosening of bottle tops.

6.2 Sample Recovery. The following equipment is required:

6.2.1 Glass Vials. Headspace vials, with butyl rubber septa and aluminum caps. Silicone rubber is not acceptable.

6.2.2 Analytical Balance. Capable of determining sample weight within an accuracy of ±1 percent.

6.2.3 Vial Sealer. To seal headspace vials.

6.2.4 Syringe. 100-ml capacity.

6.3 Analysis. The following equipment is required:

6.3.1 Headspace Sampler and Chromatograph. Capable of sampling and analyzing a constant amount of headspace gas from a sealed vial, while maintaining that vial at a temperature of 90 °C ±0.5 °C (194 °F ±0.9 °F). The chromatograph shall be equipped with a flame ionization detector (FID). Perkin-Elmer Corporation Models F-40, F-42, F-45, HS-6, and HS-100, and Hewlett-Packard Corporation Model 19395A have been found satisfactory. Chromatograph backflush capability may be required.

6.3.2 Chromatographic Columns. Stainless steel 1 m by 3.2 mm and 2 m by 3.2 mm, both containing 50/80-mesh Porapak Q. Other columns may be used provided that the precision and accuracy of the analysis of vinyl chloride standards are not impaired and information confirming that there is adequate resolution of the vinyl chloride peak are available for review. (Adequate resolution is defined as an area overlap of not more than 10 percent of the vinyl chloride peak by an interferant peak. Calculation of area overlap is explained in Procedure 1 of appendix C to this part: “Determination of Adequate Chromatographic Peak Resolution.”) Two 1.83 m columns, each containing 1 percent Carbowax 1500 on Carbopak B, have been found satisfactory for samples containing acetaldehyde.

6.3.3 Temperature Sensor. Range 0 to 100 °C (32 to 212 °F) accurate to 0.1 °C.

6.3.4 Integrator-Recorder. To record chromatograms.

6.3.5 Barometer. Accurate to 1 mm Hg.

6.3.6 Regulators. For required gas cylinders.

6.3.7 Headspace Vial Pre-Pressurizer. Nitrogen pressurized hypodermic needle inside protective shield.

## *7.0 Reagents and Standards*

7.1 Analysis. Same as Method 106, Section 7.1, with the addition of the following:

7.1.1 Water. Interference-free.

7.2 Calibration. The following items are required for calibration:

7.2.1 Cylinder Standards (4). Gas mixture standards (50-, 500-, 2000- and 4000-ppm vinyl chloride in nitrogen cylinders). Cylinder standards may be used directly to prepare a chromatograph calibration curve as described in Section 10.3, if the following conditions are met: (a) The manufacturer certifies the gas composition with an accuracy of ±3 percent or better (see Section 7.2.1.1). (b) The manufacturer recommends a maximum shelf life over which the gas concentration does not change by greater than ±5 percent from the certified value. (c) The manufacturer affixes

the date of gas cylinder preparation, certified vinyl chloride concentration, and recommended maximum shelf life to the cylinder before shipment to the buyer.

7.2.1.1 Cylinder Standards Certification. The manufacturer shall certify the concentration of vinyl chloride in nitrogen in each cylinder by (a) directly analyzing each cylinder and (b) calibrating the analytical procedure on the day of cylinder analysis. To calibrate the analytical procedure, the manufacturer shall use, as a minimum, a 3-point calibration curve. It is recommended that the manufacturer maintain (1) a high-concentration calibration standard (between 4000 and 8000 ppm) to prepare the calibration curve by an appropriate dilution technique and (2) a low-concentration calibration standard (between 50 and 500 ppm) to verify the dilution technique used. If the difference between the apparent concentration read from the calibration curve and the true concentration assigned to the low-concentration calibration standard exceeds 5 percent of the true concentration, the manufacturer shall determine the source of error and correct it, then repeat the 3-point calibration.

7.2.1.2 Verification of Manufacturer's Calibration Standards. Before using, the manufacturer shall verify each calibration standard by (a) comparing it to gas mixtures prepared (with 99 mole percent vinyl chloride) in accordance with the procedure described in Section 10.1 of Method 106 or by (b) calibrating it against vinyl chloride cylinder Standard Reference Materials (SRMs) prepared by the National Institute of Standards and Technology, if such SRMs are available. The agreement between the initially determined concentration value and the verification concentration value must be within 5 percent. The manufacturer must reverify all calibration standards on a time interval consistent with the shelf life of the cylinder standards sold.

## *8.0 Sample Collection, Preservation, Storage, and Transport*

8.1 Sample Collection.

8.1.1 PVC Sampling. Allow the resin or slurry to flow from a tap on the tank or silo until the tap line has been well purged. Extend and fill a 60-ml sample bottle under the tap, and immediately tighten a cap on the bottle. Wrap adhesive tape around the cap and bottle to prevent the cap from loosening. Place an identifying label on each bottle, and record the date, time, and sample location both on the bottles and in a log book.

8.1.2 Water Sampling. At the sampling location fill the vials bubble-free to overflowing so that a convex meniscus forms at the top. The excess water is displaced as the sealing disc is carefully placed, with the Teflon side down, on the opening of the vial. Place the aluminum seal over the disc and the neck of the vial, and crimp into place. Affix an identifying label on the bottle, and record the date, time, and sample location both on the vials and in a log book.

8.2 Sample Storage. All samples must be analyzed within 24 hours of collection, and must be refrigerated during this period.

## *9.0 Quality Control*

| Section | Quality control measure | Effect |
|---|---|---|
| 10.3 | Chromatograph calibration | Ensure precision and accuracy of chromatograph. |

## *10.0 Calibration and Standardization*

NOTE: Maintain a laboratory log of all calibrations.

10.1 Preparation of Standards. Calibration standards are prepared as follows: Place 100 µl or about two equal drops of distilled water in the sample vial, then fill the vial with the VCM/nitrogen standard, rapidly seat the septum, and seal with the aluminum cap. Use a $^{1}/_{8}$ -in. stainless steel line from the cylinder to the vial. Do not use rubber or Tygon tubing. The sample line from the cylinder must be purged (into a properly vented hood) for several minutes prior to filling the vials. After purging, reduce the flow rate to between 500 and 1000 cc/min. Place end of tubing into vial (near bottom). Position a septum on top of the vial, pressing it against the $^{1}/_{8}$ -in. filling tube to minimize the size of the vent opening. This is necessary to minimize mixing air with the standard in the vial. Each vial is to be purged with standard for 90 seconds, during which time the filling tube is gradually slid to the top of the vial. After the 90 seconds, the tube is removed with the septum, simultaneously sealing the vial. Practice will be necessary to develop good technique. Rubber gloves should be worn during the above operations. The sealed vial must then be pressurized for 60 seconds

using the vial prepressurizer. Test the vial for leakage by placing a drop of water on the septum at the needle hole. Prepressurization of standards is not required unless samples have been prepressurized.

10.2 Analyzer Calibration. Calibration is to be performed each 8-hour period the chromatograph is used. Alternatively, calibration with duplicate 50-, 500-, 2,000-, and 4,000-ppm standards (hereafter described as a four-point calibration) may be performed on a monthly basis, provided that a calibration confirmation test consisting of duplicate analyses of an appropriate standard is performed once per plant shift, or once per chromatograph carrousel operation (if the chromatograph operation is less frequent than once per shift). The criterion for acceptance of each calibration confirmation test is that both analyses of 500-ppm standards [2,000-ppm standards if dispersion resin (excluding latex resin) samples are being analyzed] must be within 5 percent of the most recent four-point calibration curve. If this criterion is not met, then a complete four-point calibration must be performed before sample analyses can proceed.

10.3 Preparation of Chromatograph Calibration Curve. Prepare two vials each of 50-, 500-, 2,000-, and 4,000-ppm standards. Run the calibration samples in exactly the same manner as regular samples. Plot $A_s$ , the integrator area counts for each standard sample, versus $C_c$ , the concentration of vinyl chloride in each standard sample. Draw a straight line through the points derived by the least squares method.

*11.0 Analytical Procedure*

11.1 Preparation of Equipment. Install the chromatographic column and condition overnight at 160 °C (320 °F). In the first operation, Porapak columns must be purged for 1 hour at 230 °C (450 °F).

Do not connect the exit end of the column to the detector while conditioning. Hydrogen and air to the detector must be turned off while the column is disconnected.

11.2 Flow Rate Adjustments. Adjust flow rates as follows:

11.2.1. Nitrogen Carrier Gas. Set regulator on cylinder to read 50 psig. Set regulator on chromatograph to produce a flow rate of 30.0 cc/min. Accurately measure the flow rate at the exit end of the column using the soap film flowmeter and a stopwatch, with the oven and column at the analysis temperature. After the instrument program advances to the “B” (backflush) mode, adjust the nitrogen pressure regulator to exactly balance the nitrogen flow rate at the detector as was obtained in the “A” mode.

11.2.2. Vial Prepressurizer Nitrogen.

11.2.2.1 After the nitrogen carrier is set, solve the following equation and adjust the pressure on the vial prepressurizer accordingly.

$$P = \frac{T_1}{T_2}\left[P_1 - \frac{P_{w1} - P_{w2}}{7.50}\right] - 10kPa \qquad \text{Eq. 107-1}$$

Where:

$T_1$ = Ambient temperature, °K (°R).

$T_2$ = Conditioning bath temperature, °K (°R).

$P_1$ = Gas chromatograph absolute dosing pressure (analysis mode), k Pa.

$P_{w1}$ = Water vapor pressure 525.8 mm Hg @ 90 °C.

$P_{w2}$ = Water vapor pressure 19.8 mm Hg @ 22 °C.

7.50 = mm Hg per k Pa.

10 kPa = Factor to adjust the prepressurized pressure to slightly less than the dosing pressure.

11.2.2.2 Because of gauge errors, the apparatus may over-pressurize the vial. If the vial pressure is at or higher than the dosing pressure, an audible double injection will occur. If the vial pressure is too low, errors will occur on resin samples because of inadequate time for head-space gas equilibrium. This condition can be avoided by running several standard gas samples at various pressures around the calculated pressure, and then selecting the highest pressure that does not produce a double injection. All samples and standards must be pressurized for 60 seconds using the vial prepressurizer. The vial is then placed into the 90 °C conditioning bath and tested for leakage by placing a drop of water on the septum at the needle hole. A clean, burr-free needle is mandatory.

11.2.3. Burner Air Supply. Set regulator on cylinder to read 50 psig. Set regulator on chromatograph to supply air to burner at a rate between 250 and 300 cc/min. Check with bubble flowmeter.

11.2.4. Hydrogen Supply. Set regulator on cylinder to read 30 psig. Set regulator on chromatograph to supply approximately 35 ±5 cc/min. Optimize hydrogen flow to yield the most sensitive detector response without extinguishing the flame. Check flow with bubble meter and record this flow.

11.3 Temperature Adjustments. Set temperatures as follows:

11.3.1. Oven (chromatograph column), 140 °C (280 °F).

11.3.2. Dosing Line, 150 °C (300 °F).

11.3.3. Injection Block, 170 °C (340 °F).

11.3.4. Sample Chamber, Water Temperature, 90 °C ±1.0 °C (194 °F ±1.8 °F).

11.4 Ignition of Flame Ionization Detector. Ignite the detector according to the manufacturer's instructions.

11.5 Amplifier Balance. Balance the amplifier according to the manufacturer's instructions.

11.6 Programming the Chromatograph. Program the chromatograph as follows:

11.6.1. I—Dosing or Injection Time. The normal setting is 2 seconds.

11.6.2. A—Analysis Time. The normal setting is approximately 70 percent of the VCM retention time. When this timer terminates, the programmer initiates backflushing of the first column.

11.6.3. B—Backflushing Time. The normal setting is double the analysis time.

11.6.4. W—Stabilization Time. The normal setting is 0.5 min to 1.0 min.

11.6.5. X—Number of Analyses Per Sample. The normal setting is one.

11.7. Sample Treatment. All samples must be recovered and analyzed within 24 hours after collection.

11.7.1 Resin Samples. The weight of the resin used must be between 0.1 and 4.5 grams. An exact weight must be obtained (within ±1 percent) for each sample. In the case of suspension resins, a volumetric cup can be prepared for holding the required amount of sample. When the cup is used, open the sample bottle, and add the cup volume of resin to the tared sample vial (tared, including septum and aluminum cap). Obtain the exact sample weight, add 100 ml or about two equal drops of water, and immediately seal the vial. Report this value on the data sheet; it is required for calculation of RVCM. In the case of dispersion resins, the cup cannot be used. Weigh the sample in an aluminum dish, transfer the sample to the tared vial, and accurately weigh it in the vial. After prepressurization of the samples, condition them for a minimum of 1 hour in the 90 °C (190 °F) bath. Do not exceed 5 hours. Prepressurization is not required if the sample weight, as analyzed, does not exceed 0.2 gram. It is also not required if solution of the

prepressurization equation yields an absolute prepressurization value that is within 30 percent of the atmospheric pressure.

NOTE: Some aluminum vial caps have a center section that must be removed prior to placing into sample tray. If the cap is not removed, the injection needle will be damaged.

11.7.2 Suspension Resin Slurry and Wet Cake Samples. Decant the water from a wet cake sample, and turn the sample bottle upside down onto a paper towel. Wait for the water to drain, place approximately 0.2 to 4.0 grams of the wet cake sample in a tared vial (tared, including septum and aluminum cap) and seal immediately. Then determine the sample weight (1 percent). All samples weighing over 0.2 gram, must be prepressurized prior to conditioning for 1 hour at 90 °C (190 °F), except as noted in Section 11.7.1. A sample of wet cake is used to determine total solids (TS). This is required for calculating the RVCM.

11.7.3 Dispersion Resin Slurry and Geon Latex Samples. The materials should not be filtered. Sample must be thoroughly mixed. Using a tared vial (tared, including septum and aluminum cap) add approximately eight drops (0.25 to 0.35 g) of slurry or latex using a medicine dropper. This should be done immediately after mixing. Seal the vial as soon as possible. Determine sample weight (1 percent). Condition the vial for 1 hour at 90 °C (190 °F) in the analyzer bath. Determine the TS on the slurry sample (Section 11.10).

11.7.4 In-process Wastewater Samples. Using a tared vial (tared, including septum and aluminum cap) quickly add approximately 1 cc of water using a medicine dropper. Seal the vial as soon as possible. Determine sample weight (1 percent). Condition the vial for 1 hour at 90 °C (190 °F) in the analyzer bath.

11.8 Preparation of Sample Turntable.

11.8.1 Before placing any sample into turntable, be certain that the center section of the aluminum cap has been removed. The numbered sample vials should be placed in the corresponding numbered positions in the turntable. Insert samples in the following order:

11.8.1.1 Positions 1 and 2. Old 2000-ppm standards for conditioning. These are necessary only after the analyzer has not been used for 24 hours or longer.

11.8.1.2 Position 3. 50-ppm standard, freshly prepared.

11.8.1.3 Position 4. 500-ppm standard, freshly prepared.

11.8.1.4 Position 5. 2000-ppm standard, freshly prepared.

11.8.1.5 Position 6. 4000-ppm standard, freshly prepared.

11.8.1.6 Position 7. Sample No. 7 (This is the first sample of the day, but is given as 7 to be consistent with the turntable and the integrator printout.)

11.8.2 After all samples have been positioned, insert the second set of 50-, 500-, 2000-, and 4000-ppm standards. Samples, including standards, must be conditioned in the bath of 90 °C (190 °F) for a minimum of one hour and a maximum of five hours.

11.9 Start Chromatograph Program. When all samples, including standards, have been conditioned at 90 °C (190 °F) for at least one hour, start the analysis program according to the manufacturer's instructions. These instructions must be carefully followed when starting and stopping a program to prevent damage to the dosing assembly.

11.10 Determination of Total Solids. For wet cake, slurry, resin solution, and PVC latex samples, determine TS for each sample by accurately weighing approximately 3 to 4 grams of sample in an aluminum pan before and after placing in a draft oven (105 to 110 °C (221 to 230 °F)). Samples must be dried to constant weight. After first weighing, return the pan to the oven for a short period of time, and then reweigh to verify complete dryness. The TS are then calculated as the final sample weight divided by initial sample weight.

*12.0 Calculations and Data Analysis*

12.1 Nomenclature.

$A_s$ = Chromatogram area counts of vinyl chloride for the sample, area counts.

$A_s$ = Chromatogram area counts of vinyl chloride for the sample.

$C_c$ = Concentration of vinyl chloride in the standard sample, ppm.

$K_p$ = Henry's Law Constant for VCM in PVC 90 °C, $6.52 \times 10^{-6}$ g/g/mm Hg.

$K_w$ = Henry's Law Constant for VCM in water 90 °C, $7 \times 10^{-7}$ g/g/mm Hg.

$M_v$ = Molecular weight of VCM, 62.5 g/mole.

m = Sample weight, g.

$P_a$ = Ambient atmospheric pressure, mm Hg.

R = Gas constant, ($62360^3$ ml) (mm Hg)/(mole)(°K).

$R_f$ = Response factor in area counts per ppm VCM.

$R_s$ = Response factor, area counts/ppm.

$T_l$ = Ambient laboratory temperature, °K.

TS = Total solids expressed as a decimal fraction.

$T_2$ = Equilibrium temperature, °K.

$V_g$ = Volume of vapor phase, ml.

$$= V_v - \frac{m(TS)}{1.36} - \frac{m(1-TS)}{0.9653}$$

$V_v$ = Vial volume,$^3$ ml.

1.36 = Density of PVC at 90 °C, g/$^3$ ml.

0.9653 = Density of water at 90 °C, g/$^3$ ml.

12.2 Response Factor. If the calibration curve described in Section 10.3 passes through zero, an average response factor, $R_f$ , may be used to facilitate computation of vinyl chloride sample concentrations.

12.2.1 To compute $R_f$ , first compute a response factor, $R_s$ , for each sample as follows:

$$R_s = \frac{A_s}{C_c} \qquad \text{Eq. 107-2}$$

12.2.2 Sum the individual response factors, and calculate $R_f$ . If the calibration curve does not pass through zero, use the calibration curve to determine each sample concentration.

12.3 Residual Vinyl Chloride Monomer Concentration, ($C_{rvc}$ ) or Vinyl Chloride Monomer Concentration. Calculate $C_{rvc}$ in ppm or mg/kg as follows:

$$C_{rvc} = \frac{A_s P_a}{R_f T_1}\left[\frac{M_v V_g}{Rm} + K_p\left(TS\right)T_2 K_w\left(1-TS\right)T_2\right] \qquad \text{Eq. 107-3}$$

NOTE: Results calculated using these equations represent concentration based on the total sample. To obtain results based on dry PVC content, divide by TS.

*13.0 Method Performance*

13.1 Range and Sensitivity. The lower limit of detection of vinyl chloride will vary according to the sampling and chromatographic system. The system should be capable of producing a measurement for a 50-ppm vinyl chloride standard that is at least 10 times the standard deviation of the system background noise level.

13.2 An interlaboratory comparison between seven laboratories of three resin samples, each split into three parts, yielded a standard deviation of 2.63 percent for a sample with a mean of 2.09 ppm, 4.16 percent for a sample with a mean of 1.66 ppm, and 5.29 percent for a sample with a mean of 62.66 ppm.

*14.0 Pollution Prevention [Reserved]*

*15.0 Waste Management [Reserved]*

*16.0 References*

1. B.F. Goodrich, Residual Vinyl Chloride Monomer Content of Polyvinyl Chloride Resins, Latex, Wet Cake, Slurry and Water Samples. B.F. Goodrich Chemical Group Standard Test Procedure No. 1005-E. B.F. Goodrich Technical Center, Avon Lake, Ohio. October 8, 1979.

2. Berens, A.R. The Diffusion of Vinyl Chloride in Polyvinyl Chloride. ACS-Division of Polymer Chemistry, Polymer Preprints 15 (2):197. 1974.

3. Berens, A.R. The Diffusion of Vinyl Chloride in Polyvinyl Chloride. ACS-Division of Polymer Chemistry, Polymer Preprints 15 (2):203. 1974.

4. Berens, A.R., *et. al.* Analysis for Vinyl Chloride in PVC Powders by Head-Space Gas Chromatography. Journal of Applied Polymer Science. 19:3169-3172. 1975.

5. Mansfield, R.A. The Evaluation of Henry's Law Constant (Kp) and Water Enhancement in the Perkin-Elmer Multifract F-40 Gas Chromatograph. B.F. Goodrich. Avon Lake, Ohio. February 10, 1978.

*17.0 Tables, Diagrams, Flowcharts, and Validation Data [Reserved]*

Method 107A—Determination of Vinyl Chloride Content of Solvents, Resin-Solvent Solution, Polyvinyl Chloride Resin, Resin Slurry, Wet Resin, and Latex Samples

*Introduction*

Performance of this method should not be attempted by persons unfamiliar with the operation of a gas chromatograph (GC) or by those who are unfamiliar with source sampling because knowledge beyond the scope of

this presentation is required. Care must be exercised to prevent exposure of sampling personnel to vinyl chloride, a carcinogen.

*1. Applicability and Principle*

1.1 Applicability. This is an alternative method and applies to the measurement of the vinyl chloride content of solvents, resin solvent solutions, polyvinyl chloride (PVC) resin, wet cake slurries, latex, and fabricated resin samples. This method is not acceptable where methods from Section 304(h) of the Clean Water Act, 33 U.S.C. 1251 et seq., (the Federal Water Pollution Control Act Amendments of 1972 as amended by the Clean Water Act of 1977) are required.

1.2 Principle. The basis for this method lies in the direct injection of a liquid sample into a chromatograph and the subsequent evaporation of all volatile material into the carrier gas stream of the chromatograph, thus permitting analysis of all volatile material including vinyl chloride.

*2. Range and Sensitivity*

The lower limit of detection of vinyl chloride in dry PVC resin is 0.2 ppm. For resin solutions, latexes, and wet resin, this limit rises inversely as the nonvolatile (resin) content decreases.

With proper calibration, the upper limit may be extended as needed.

*3. Interferences*

The chromatograph columns and the corresponding operating parameters herein described normally provide an adequate resolution of vinyl chloride. In cases where resolution interferences are encountered, the chromatograph operator shall select the column and operating parameters best suited to his particular analysis problem, subject to the approval of the Administrator. Approval is automatic, provided that the tester produces confirming data through an adequate supplemental analytical technique, such as analysis with a different column or GC/mass spectroscopy, and has the data available for review by the Administrator.

*4. Precision and Reproducibility*

A standard sample of latex containing 181.8 ppm vinyl chloride analyzed 10 times by the alternative method showed a standard deviation of 7.5 percent and a mean error of 0.21 percent.

A sample of vinyl chloride copolymer resin solution was analyzed 10 times by the alternative method and showed a standard deviation of 6.6 percent at a level of 35 ppm.

*5. Safety*

Do not release vinyl chloride to the laboratory atmosphere during preparation of standards. Venting or purging with vinyl chloride monomer (VCM) air mixtures must be held to minimum. When purging is required, the vapor must be routed to outside air. Vinyl chloride, even at low-ppm levels, must never be vented inside the laboratory.

*6. Apparatus*

6.1 Sampling. The following equipment is required:

6.1.1 Glass Bottles. 16-oz wide mouth wide polyethylene-lined, screw-on tops.

6.1.2 Adhesive Tape. To prevent loosening of bottle tops.

6.2 Sample Recovery. The following equipment is required:

6.2.1 Glass Vials. 20-ml capacity with polycone screw caps.

6.2.2 Analytical Balance. Capable of weighing to ±0.01 gram.

6.2.3 Syringe. 50-microliter size, with removable needle.

6.2.4 Fritted Glass Sparger. Fine porosity.

6.2.5 Aluminum Weighing Dishes.

6.2.6 Sample Roller or Shaker. To help dissolve sample.

6.3 Analysis. The following equipment is required:

6.3.1 Gas Chromatograph. Hewlett Packard Model 5720A or equivalent.

6.3.2 Chromatograph Column. Stainless steel, 6.1 m by 3.2 mm, packed with 20 percent Tergitol E-35 on Chromosorb W AW 60/80 mesh. The analyst may use other columns provided that the precision and accuracy of the analysis of vinyl chloride standards are not impaired and that he has available for review information confirming that there is adequate resolution of the vinyl chloride peak. (Adequate resolution is defined as an area overlap of not more than 10 percent of the vinyl chloride peak by an interfering peak. Calculation of area overlap is explained in Appendix C, Procedure 1: “Determination of Adequate Chromatographic Peak Resolution.”)

6.3.3 Valco Instrument Six-Port Rotary Valve. For column back flush.

6.3.4 Septa. For chromatograph injection port.

6.3.5 Injection Port Liners. For chromatograph used.

6.3.6 Regulators. For required gas cylinders.

6.3.7 Soap Film Flowmeter. Hewlett Packard No. 0101-0113 or equivalent.

6.4 Calibration. The following equipment is required:

6.4.1 Analytical Balance. Capable of weighing to ±0.0001 g.

6.4.2 Erlenmeyer Flask With Glass Stopper. 125 ml.

6.4.3 Pipets. 0.1, 0.5, 1, 5, 10, and 50 ml.

6.4.4 Volumetric Flasks. 10 and 100 ml.

*7. Reagents*

Use only reagents that are of chromatograph grade.

7.1 Analysis. The following items are required:

7.1.1 Hydrogen Gas. Zero grade.

7.1.2 Nitrogen Gas. Zero grade.

7.1.3 Air. Zero grade.

7.1.4 Tetrahydrofuran (THF). Reagent grade.

Analyze the THF by injecting 10 microliters into the prepared gas chromatograph. Compare the THF chromatogram with that shown in Figure 107A-1. If the chromatogram is comparable to A, the THF should be sparged with pure nitrogen for approximately 2 hours using the fritted glass sparger to attempt to remove the interfering peak. Reanalyze the sparged THF to determine whether the THF is acceptable for use. If the scan is comparable to B, the THF should be acceptable for use in the analysis.

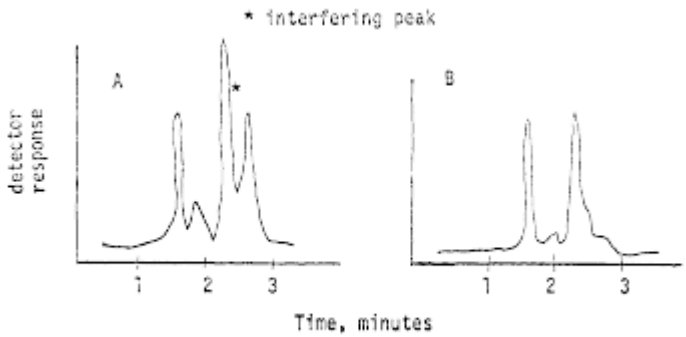


Figure 107A-1

7.1.5 N, N-Dimethylacetamide (DMAC). Spectrographic grade. For use in place of THF.

7.2 Calibration. The following item is required:

7.2.1 Vinyl Chloride 99.9 Percent. Ideal Gas Products lecture bottle, or equivalent. For preparation of standard solutions.

*8. Procedure*

8.1 Sampling. Allow the liquid or dried resin to flow from a tap on the tank, silo, or pipeline until the tap has been purged. Fill a wide-mouth pint bottle, and immediately tightly cap the bottle. Place an identifying label on each bottle and record the date, time, sample location, and material.

8.2 Sample Treatment. Sample must be run within 24 hours.

8.2.1 Resin Samples. Weigh 9.00 ±0.01 g of THF or DMAC in a tared 20-ml vial. Add 1.00 ±0.01 g of resin to the tared vial containing the THF or DMAC. Close the vial tightly with the screw cap, and shake or otherwise agitate the vial until complete solution of the resin is obtained. Shaking may require several minutes to several hours, depending on the nature of the resin.

8.2.2 Suspension Resin Slurry and Wet Resin Sample. Slurry must be filtered using a small Buchner funnel with vacuum to yield a wet resin sample. The filtering process must be continued only as long as a steady stream of water is exiting from the funnel. Excessive filtration time could result in some loss of VCM. The wet resin sample is weighed into a tared 20-ml vial with THF or DMAC as described earlier for resin samples (8.2.1) and treated the same as the resin sample. A sample of the wet resin is used to determine total solids as required for calculating the residual VCM (Section 8.3.4).

8.2.3 Latex and Resin Solvent Solutions. Samples must be thoroughly mixed. Weigh 1.00 ±0.01 g of the latex or resin-solvent solution into a 20-ml vial containing 9.00 ±0.01 g of THF or DMAC as for the resin samples (8.2.1). Cap and shake until complete solution is obtained. Determine the total solids of the latex or resin solution sample (Section 8.3.4).

8.2.4 Solvents and Non-viscous Liquid Samples. No preparation of these samples is required. The neat samples are injected directly into the GC.

8.3 Analysis.

8.3.1 Preparation of GC. Install the chromatographic column, and condition overnight at 70 °C. Do not connect the exit end of the column to the detector while conditioning.

8.3.1.1 Flow Rate Adjustments. Adjust the flow rate as follows:

a. Nitrogen Carrier Gas. Set regulator on cylinder to read 60 psig. Set column flow controller on the chromatograph using the soap film flowmeter to yield a flow rate of 40 cc/min.

b. Burner Air Supply. Set regulator on the cylinder at 40 psig. Set regulator on the chromatograph to supply air to the burner to yield a flow rate of 250 to 300 cc/min using the flowmeter.

c. Hydrogen. Set regulator on cylinder to read 60 psig. Set regulator on the chromatograph to supply 30 to 40 cc/min using the flowmeter. Optimize hydrogen flow to yield the most sensitive detector response without extinguishing the flame. Check flow with flowmeter and record this flow.

d. Nitrogen Back Flush Gas. Set regulator on the chromatograph using the soap film flowmeter to yield a flow rate of 40 cc/min.

8.3.1.2 Temperature Adjustments. Set temperature as follows:

a. Oven (chromatographic column) at 70 °C.

b. Injection Port at 100 °C.

c. Detector at 300 °C.

8.3.1.3 Ignition of Flame Ionization Detector. Ignite the detector according to the manufacturer's instructions. Allow system to stabilize approximately 1 hour.

8.3.1.4 Recorder. Set pen at zero and start chart drive.

8.3.1.5 Attenuation. Set attenuation to yield desired peak height depending on sample VCM content.

8.3.2 Chromatographic Analyses.

a. Sample Injection. Remove needle from 50-microliter syringe. Open sample vial and draw 50-microliters of THF or DMAC sample recovery solution into the syringe. Recap sample vial. Attach needle to the syringe and while holding the syringe vertically (needle uppermost), eject 40 microliters into an absorbent tissue. Wipe needle with tissue. Now inject 10 microliters into chromatograph system. Repeat the injection until two consecutive values for the height of the vinyl chloride peak do not vary more than 5 percent. Use the average value for these two peak heights to compute the sample concentration.

b. Back Flush. After 4 minutes has elapsed after sample injection, actuate the back flush valve to purge the first 4 feet of the chromatographic column of solvent and other high boilers.

c. Sample Data. Record on the chromatograph strip chart the data from the sample label.

d. Elution Time. Vinyl chloride elutes at 2.8 minutes. Acetaldehyde elutes at 3.7 minutes. Analysis is considered complete when chart pen becomes stable. After 5 minutes, reset back flush valve and inject next sample.

8.3.3 Chromatograph Servicing.

a. Septum. Replace after five sample injections.

b. Sample Port Liner. Replace the sample port liner with a clean spare after five sample injections.

c. Chromatograph Shutdown. If the chromatograph has been shut down overnight, rerun one or more samples from the preceding day to test stability and precision prior to starting on the current day's work.

8.3.4 Determination of Total Solids (TS). For wet resin, resin solution, and PVC latex samples, determine the TS for each sample by accurately weighing approximately 3 to 5 grams of sample into a tared aluminum pan. The initial procedure is as follows:

a. Where water is the major volatile component: Tare the weighing dish, and add 3 to 5 grams of sample to the dish. Weigh to the nearest milligram.

b. Where volatile solvent is the major volatile component: Transfer a portion of the sample to a 20-ml screw cap vial and cap immediately. Weigh the vial to the nearest milligram. Uncap the vial and transfer a 3- to 5-gram portion of the sample to a tared aluminum weighing dish. Recap the vial and reweigh to the nearest milligram. The vial weight loss is the sample weight.

To continue, place the weighing pan in a 130 °C oven for 1 hour. Remove the dish and allow to cool to room temperature in a desiccator. Weigh the pan to the nearest 0.1 mg. Total solids is the weight of material in the aluminum pan after heating divided by the net weight of sample added to the pan originally times 100.

*9. Calibration of the Chromatograph*

9.1 Preparation of Standards. Prepare a 1 percent by weight (approximate) solution of vinyl chloride in THF or DMAC by bubbling vinyl chloride gas from a cylinder into a tared 125-ml glass-stoppered flask containing THF or DMAC. The weight of vinyl chloride to be added should be calculated prior to this operation, i.e., 1 percent of the weight of THF or DMAC contained in the tared flask. This must be carried out in a laboratory hood. Adjust the vinyl chloride flow from the cylinder so that the vinyl chloride dissolves essentially completely in the THF or DMAC and is not blown to the atmosphere. Take particular care not to volatize any of the solution. Stopper the flask and swirl the solution to effect complete mixing. Weigh the stoppered flask to nearest 0.1 mg to determine the exact amount of vinyl chloride added.

Pipet 10 ml of the approximately 1 percent solution into a 100-ml glass-stoppered volumetric flask, and add THF or DMAC to fill to the mark. Cap the flask and invert 10 to 20 times. This solution contains approximately 1,000 ppm by weight of vinyl chloride (note the exact concentration).

Pipet 50-, 10-, 5-, 1-, 0.5-, and 0.1-ml aliquots of the approximately 1,000 ppm solution into 10 ml glass stoppered volumetric flasks. Dilute to the mark with THF or DMAC, cap the flasks and invert each 10 to 20 times. These solutions contain approximately 500, 100, 50, 10, 5, and 1 ppm vinyl chloride. Note the exact concentration of each one. These standards are to be kept under refrigeration in stoppered bottles, and must be renewed every 3 months.

9.2 Preparation of Chromatograph Calibration Curve.

Obtain the GC for each of the six final solutions prepared in Section 9.1 by using the procedure in Section 8.3.2. Prepare a chart plotting peak height obtained from the chromatogram of each solution versus the known concentration. Draw a straight line through the points derived by the least squares method.

*10. Calculations*

10.1 Response Factor. From the calibration curve described in Section 9.2, select the value of $C_c$ that corresponds to $H_c$ for each sample. Compute the response factor, $R_f$ , for each sample as follows:

$$R_f = \frac{C_c}{H_c} \qquad \text{Eq. 107A-1}$$

where:

$R_f$ =Chromatograph response factor, ppm/mm.

$C_c$ =Concentration of vinyl chloride in the standard sample, ppm.

$H_c$ =Peak height of the standard sample, mm.

10.2 Residual vinyl chloride monomer concentration ($C_{rvc}$ ) or vinyl chloride monomer concentration in resin:

$$C_{rvc} = 10 H_s R_f \qquad \text{Eq. 107A-2}$$

Where:

$C_{rvc}$ =Concentration of residual vinyl chloride monomer, ppm.

$H_s$ =Peak height of sample, mm.

$R_f$ =Chromatograph response factor.

10.3 Samples containing volatile material, i.e., resin solutions, wet resin, and latexes:

$$C_{rvc} = \frac{H_s R_f (1,000)}{TS} \qquad \text{Eq. 107A-3}$$

where:

TS=Total solids in the sample, weight fraction.

10.4 Samples of solvents and in process wastewater:

$$C_{rvc} = \frac{H_s R_f}{0.888} \qquad \text{Eq. 107A-4}$$

Where:

0.888=Specific gravity of THF.

*11. Bibliography*

1. Communication from R. N. Wheeler, Jr.; Union Carbide Corporation. Part 61 National Emissions Standards for Hazardous Air Pollutants appendix B, Method 107—Alternate Method, September 19, 1977.

Method 108—Determination of Particulate and Gaseous Arsenic Emissions

NOTE: This method does not include all of the specifications ( *e.g.,* equipment and supplies) and procedures ( *e.g.,* sampling and analytical) essential to its performance. Some material is incorporated by reference from other methods in appendix A to 40 CFR part 60. Therefore, to obtain reliable results, persons using this method should have a thorough knowledge of at least the following additional test methods: Method 1, Method 2, Method 3, Method 5, and Method 12.

*1.0 Scope and Application.*

1.1 Analytes.

| Analyte | CAS No. | Sensitivity |
|---|---|---|
| Arsenic compounds as arsenic (As) | 7440-38-2 | Lower limit 10 µg/ml or less. |

1.2 Applicability. This method is applicable for the determination of inorganic As emissions from stationary sources as specified in an applicable subpart of the regulations.

1.3 Data Quality Objectives. Adherence to the requirements of this method will enhance the quality of the data obtained from air pollutant sampling methods.

*2.0 Summary of Method*

Particulate and gaseous As emissions are withdrawn isokinetically from the source and are collected on a glass mat filter and in water. The collected arsenic is then analyzed by means of atomic absorption spectrophotometry (AAS).

*3.0 Definitions. [Reserved]*

*4.0 Interferences*

Analysis for As by flame AAS is sensitive to the chemical composition and to the physical properties ( *e.g.,* viscosity, pH) of the sample. The analytical procedure includes a check for matrix effects (Section 11.5).

*5.0 Safety*

5.1 This method may involve hazardous materials, operations, and equipment. This test method may not address all of the safety problems associated with its use. It is the responsibility of the user to establish appropriate safety and health practices and determine the applicability of regulatory limitations prior to performing this test method.

5.2 Corrosive reagents. The following reagents are hazardous. Personal protective equipment and safe procedures that prevent chemical splashes are recommended. If contact occurs, immediately flush with copious amounts of water for at least 15 minutes. Remove clothing under shower and decontaminate. Treat residual chemical burns as thermal burns.

5.2.1 Hydrochloric Acid (HCl). Highly corrosive liquid with toxic vapors. Vapors are highly irritating to eyes, skin, nose, and lungs, causing severe damage. May cause bronchitis, pneumonia, or edema of lungs. Exposure to concentrations of 0.13 to 0.2 percent can be lethal to humans in a few minutes. Provide ventilation to limit exposure. Reacts with metals, producing hydrogen gas.

5.2.2 Hydrogen Peroxide ($H_2O_2$). Very harmful to eyes. 30% $H_2O_2$ can burn skin, nose, and lungs.

5.2.3 Nitric Acid ($HNO_3$). Highly corrosive to eyes, skin, nose, and lungs. Vapors are highly toxic and can cause bronchitis, pneumonia, or edema of lungs. Reaction to inhalation may be delayed as long as 30 hours and still be fatal. Provide ventilation to limit exposure. Strong oxidizer. Hazardous reaction may occur with organic materials such as solvents.

5.2.4 Sodium Hydroxide (NaOH). Causes severe damage to eyes and skin. Inhalation causes irritation to nose, throat, and lungs. Reacts exothermically with small amounts of water.

## *6.0 Equipment and Supplies*

6.1 Sample Collection. A schematic of the sampling train used in performing this method is shown in Figure 108-1; it is similar to the Method 5 sampling train of 40 CFR part 60, appendix A. The following items are required for sample collection:

6.1.1 Probe Nozzle, Probe Liner, Pitot Tube, Differential Pressure Gauge, Filter Holder, Filter Heating System, Temperature Sensor, Metering System, Barometer, and Gas Density Determination Equipment. Same as Method 5, Sections 6.1.1.1 to 6.1.1.7, 6.1.1.9, 6.1.2, and 6.1.3, respectively.

6.1.2 Impingers. Four impingers connected in series with leak-free ground-glass fittings or any similar leak-free noncontaminating fittings. For the first, third, and fourth impingers, use the Greenburg-Smith design, modified by replacing the tip with a 1.3-cm ID (0.5-in.) glass tube extending to about 1.3 cm (0.5 in.) from the bottom of the flask. For the second impinger, use the Greenburg-Smith design with the standard tip. Modifications ( *e.g.,* flexible connections between the impingers, materials other than glass, or flexible vacuum lines to connect the filter holder to the condenser) are subject to the approval of the Administrator.

6.1.3 Temperature Sensor. Place a temperature sensor, capable of measuring temperature to within 1 °C (2 °F), at the outlet of the fourth impinger for monitoring purposes.

6.2 Sample Recovery. The following items are required for sample recovery:

6.2.1 Probe-Liner and Probe-Nozzle Brushes, Petri Dishes, Graduated Cylinder and/or Balance, Plastic Storage Containers, and Funnel and Rubber Policeman. Same as Method 5, Sections 6.2.1 and 6.2.4 to 6.2.8, respectively.

6.2.2 Wash Bottles. Polyethylene (2).

6.2.3 Sample Storage Containers. Chemically resistant, polyethylene or polypropylene for glassware washes, 500- or 1000-ml.

6.3 Analysis. The following items are required for analysis:

6.3.1 Spectrophotometer. Equipped with an electrodeless discharge lamp and a background corrector to measure absorbance at 193.7 nanometers (nm). For measuring samples having less than 10 µg As/ml, use a vapor generator accessory or a graphite furnace.

6.3.2 Recorder. To match the output of the spectrophotometer.

6.3.3 Beakers. 150 ml.

6.3.4 Volumetric Flasks. Glass 50-, 100-, 200-, 500-, and 1000-ml; and polypropylene, 50-ml.

6.3.5 Balance. To measure within 0.5 g.

6.3.6 Volumetric Pipets. 1-, 2-, 3-, 5-, 8-, and 10-ml.

6.3.7 Oven.

6.3.8 Hot Plate.

## *7.0 Reagents and Standards*

Unless otherwise indicated, it is intended that all reagents conform to the specifications established by the Committee on Analytical Reagents of the American Chemical Society, where such specifications are available; otherwise, use the best available grade.

7.1 The following reagents are required for sample collection:

7.1.1 Filters. Same as Method 5, Section 7.1.1, except that the filters need not be unreactive to $SO_2$ .

7.1.2 Silica Gel, Crushed Ice, and Stopcock Grease. Same as Method 5, Sections 7.1.2, 7.1.4, and 7.1.5, respectively.

7.1.3 Water. Deionized distilled to meet ASTM D 1193-77 or 91 (incorporated by reference-see § 61.18), Type 3. When high concentrations of organic matter are not expected to be present, the $KMnO_4$ test for oxidizable organic matter may be omitted.

7.2 Sample Recovery.

7.2.1 0.1 N NaOH. Dissolve 4.00 g of NaOH in about 500 ml of water in a 1-liter volumetric flask. Then, dilute to exactly 1.0 liter with water.

7.3 Analysis. The following reagents and standards are required for analysis:

7.3.1 Water. Same as Section 7.1.3.

7.3.2 Sodium Hydroxide, 0.1 N. Same as in Section 7.2.1.

7.3.3 Sodium Borohydride ($NaBH_4$ ), 5 Percent Weight by Volume (W/V). Dissolve 50.0 g of $NaBH_4$ in about 500 ml of 0.1 N NaOH in a 1-liter volumetric flask. Then, dilute to exactly 1.0 liter with 0.1 N NaOH.

7.3.4 Hydrochloric Acid, Concentrated.

7.3.5 Potassium Iodide (KI), 30 Percent (W/V). Dissolve 300 g of KI in 500 ml of water in a 1 liter volumetric flask. Then, dilute to exactly 1.0 liter with water.

7.3.6 Nitric Acid, Concentrated.

7.3.7 Nitric Acid, 0.8 N. Dilute 52 ml of concentrated $HNO_3$ to exactly 1.0 liter with water.

7.3.8 Nitric Acid, 50 Percent by Volume (V/V). Add 50 ml concentrated $HNO_3$ to 50 ml water.

7.3.9 Stock Arsenic Standard, 1 mg As/ml. Dissolve 1.3203 g of primary standard grade $As_2 O_3$ in 20 ml of 0.1 N NaOH in a 150 ml beaker. Slowly add 30 ml of concentrated $HNO_3$ . Heat the resulting solution and evaporate just to dryness. Transfer the residue quantitatively to a 1-liter volumetric flask, and dilute to 1.0 liter with water.

7.3.10 Arsenic Working Solution, 1.0 µg As/ml. Pipet exactly 1.0 ml of stock arsenic standard into an acid-cleaned, appropriately labeled 1-liter volumetric flask containing about 500 ml of water and 5 ml of concentrated $HNO_3$ . Dilute to exactly 1.0 liter with water.

7.3.11 Air. Suitable quality for AAS analysis.

7.3.12 Acetylene. Suitable quality for AAS analysis.

7.3.13 Nickel Nitrate, 5 Percent Ni (W/V). Dissolve 24.780 g of nickel nitrate hexahydrate [$Ni(NO_3)_2 6H_2 O$] in water in a 100-ml volumetric flask, and dilute to 100 ml with water.

7.3.14 Nickel Nitrate, 1 Percent Ni (W/V). Pipet 20 ml of 5 percent nickel nitrate solution into a 100-ml volumetric flask, and dilute to exactly 100 ml with water.

7.3.15 Hydrogen Peroxide, 3 Percent by Volume. Pipet 50 ml of 30 percent $H_2O_2$ into a 500-ml volumetric flask, and dilute to exactly 500 ml with water.

*8.0 Sample Collection, Preservation, Transport, and Storage*

8.1 Pretest Preparation. Follow the general procedure given in Method 5, Section 8.1, except the filter need not be weighed, and the 200 ml of 0.1N NaOH and Container 4 should be tared to within 0.5 g.

8.2 Preliminary Determinations. Follow the general procedure given in Method 5, Section 8.2, except select the nozzle size to maintain isokinetic sampling rates below 28 liters/min (1.0 cfm).

8.3 Preparation of Sampling Train. Follow the general procedure given in Method 5, Section 8.3.

8.4 Leak-Check Procedures. Same as Method 5, Section 8.4.

8.5 Sampling Train Operation. Follow the general procedure given in Method 5, Section 8.5, except maintain isokinetic sampling flow rates below 28 liters/min (1.0 cfm). For each run, record the data required on a data sheet similar to the one shown in Figure 108-2.

8.6 Calculation of Percent Isokinetic. Same as Method 5, Section 8.6.

8.7 Sample Recovery. Same as Method 5, Section 8.7, except that 0.1 N NaOH is used as the cleanup solvent instead of acetone and that the impinger water is treated as follows:

8.7.1 Container Number 4 (Impinger Water). Clean each of the first three impingers and connecting glassware in the following manner:

8.7.1.1 Wipe the impinger ball joints free of silicone grease, and cap the joints.

8.7.1.2 Rotate and agitate each of the first two impingers, using the impinger contents as a rinse solution.

8.7.1.3 Transfer the liquid from the first three impingers to Container Number 4. Remove the outlet ball-joint cap, and drain the contents through this opening. Do not separate the impinger parts (inner and outer tubes) while transferring their contents to the container.

8.7.1.4 Weigh the contents of Container No. 4 to within 0.5 g. Record in the log the weight of liquid along with a notation of any color or film observed in the impinger catch. The weight of liquid is needed along with the silica gel data to calculate the stack gas moisture content.

NOTE: Measure and record the total amount of 0.1 N NaOH used for rinsing under Sections 8.7.1.5 and 8.7.1.6.

8.7.1.5 Pour approximately 30 ml of 0.1 NaOH into each of the first two impingers, and agitate the impingers. Drain the 0.1 N NaOH through the outlet arm of each impinger into Container Number 4. Repeat this operation a second time; inspect the impingers for any abnormal conditions.

8.7.1.6 Wipe the ball joints of the glassware connecting the impingers and the back half of the filter holder free of silicone grease, and rinse each piece of glassware twice with 0.1 N NaOH; transfer this rinse into Container Number 4. (DO NOT RINSE or brush the glass-fritted filter support.) Mark the height of the fluid level to determine whether leakage occurs during transport. Label the container to identify clearly its contents.

8.8 Blanks.

8.8.1 Sodium Hydroxide. Save a portion of the 0.1 N NaOH used for cleanup as a blank. Take 200 ml of this solution directly from the wash bottle being used and place it in a plastic sample container labeled “NaOH blank.”

8.8.2 Water. Save a sample of the water, and place it in a container labeled "$H_2O$ blank."

8.8.3 Filter. Save two filters from each lot of filters used in sampling. Place these filters in a container labeled "filter blank."

*9.0 Quality Control*

9.1 Miscellaneous Quality Control Measures.

| Section | Quality control measure | Effect |
|---|---|---|
| 8.4, 10.1 | Sampling equipment leak-checks and calibration | Ensures accuracy and precision of sampling measurements. |
| 10.4 | Spectrophotometer calibration | Ensures linearity of spectrophotometer response to standards. |
| 11.5 | Check for matrix effects | Eliminates matrix effects. |

9.2 Volume Metering System Checks. Same as Method 5, Section 9.2.

*10.0 Calibration and Standardization*

NOTE: Maintain a laboratory log of all calibrations.

10.1 Sampling Equipment. Same as Method 5, Section 10.0.

10.2 Preparation of Standard Solutions.

10.2.1 For the high level procedure, pipet 1, 3, 5, 8, and 10 ml of the 1.0 mg As/ml stock solution into separate 100 ml volumetric flasks, each containing 5 ml of concentrated $HNO_3$ . Dilute to the mark with water.

10.2.2 For the low level vapor generator procedure, pipet 1, 2, 3, and 5 ml of 1.0 µg As/ml standard solution into separate reaction tubes. Dilute to the mark with water.

10.2.3 For the low level graphite furnace procedure, pipet 1, 5, 10 and 15 ml of 1.0 µg As/ml standard solution into separate flasks along with 2 ml of the 5 percent nickel nitrate solution and 10 ml of the 3 percent $H_2O_2$ solution. Dilute to the mark with water.

10.3 Calibration Curve. Analyze a 0.8 N $HNO_3$ blank and each standard solution according to the procedures outlined in section 11.4.1. Repeat this procedure on each standard solution until two consecutive peaks agree within 3 percent of their average value. Subtract the average peak height (or peak area) of the blank—which must be less than 2 percent of recorder full scale—from the averaged peak height of each standard solution. If the blank absorbance is greater than 2 percent of full-scale, the probable cause is As contamination of a reagent or carry-over of As from a previous sample. Prepare the calibration curve by plotting the corrected peak height of each standard solution versus the corresponding final total As weight in the solution.

10.4 Spectrophotometer Calibration Quality Control. Calculate the least squares slope of the calibration curve. The line must pass through the origin or through a point no further from the origin than ±2 percent of the recorder full scale. Multiply the corrected peak height by the reciprocal of the least squares slope to determine the distance each calibration point lies from the theoretical calibration line. The difference between the calculated concentration values and the actual concentrations ( *e.g.,* 1, 3, 5, 8, and 10 mg As for the high-level procedure) must be less than 7 percent for all standards.

NOTE: For instruments equipped with direct concentration readout devices, preparation of a standard curve will not be necessary. In all cases, follow calibration and operational procedures in the manufacturers' instruction manual.

*11.0 Analytical Procedure*

11.1 Sample Loss Check. Prior to analysis, check the liquid level in Containers Number 2 and Number 4. Note on the analytical data sheet whether leakage occurred during transport. If a noticeable amount of leakage occurred, either void the sample or take steps, subject to the approval of the Administrator, to adjust the final results.

11.2 Sample Preparation.

11.2.1 Container Number 1 (Filter). Place the filter and loose particulate matter in a 150 ml beaker. Also, add the filtered solid material from Container Number 2 (see Section 11.2.2). Add 50 ml of 0.1 N NaOH. Then stir and warm on a hot plate at low heat (do not boil) for about 15 minutes. Add 10 ml of concentrated $HNO_3$ , bring to a boil, then simmer for about 15 minutes. Filter the solution through a glass fiber filter. Wash with hot water, and catch the filtrate in a clean 150 ml beaker. Boil the filtrate, and evaporate to dryness. Cool, add 5 ml of 50 percent $HNO_3$ , and then warm and stir. Allow to cool. Transfer to a 50-ml volumetric flask, dilute to volume with water, and mix well.

11.2.2 Container Number 2 (Probe Wash).

11.2.2.1 Filter (using a glass fiber filter) the contents of Container Number 2 into a 200 ml volumetric flask. Combine the filtered (solid) material with the contents of Container Number 1 (Filter).

11.2.2.2 Dilute the filtrate to exactly 200 ml with water. Then pipet 50 ml into a 150 ml beaker. Add 10 ml of concentrated $HNO_3$ , bring to a boil, and evaporate to dryness. Allow to cool, add 5 ml of 50 percent $HNO_3$ , and then warm and stir. Allow the solution to cool, transfer to a 50-ml volumetric flask, dilute to volume with water, and mix well.

11.2.3 Container Number 4 (Impinger Solution). Transfer the contents of Container Number 4 to a 500 ml volumetric flask, and dilute to exactly 500-ml with water. Pipet 50 ml of the solution into a 150-ml beaker. Add 10 ml of concentrated $HNO_3$ , bring to a boil, and evaporate to dryness. Allow to cool, add 5 ml of 50 percent $HNO_3$ , and then warm and stir. Allow the solution to cool, transfer to a 50-ml volumetric flask, dilute to volume with water, and mix well.

11.2.4 Filter Blank. Cut each filter into strips, and treat each filter individually as directed in Section 11.2.1, beginning with the sentence, “Add 50 ml of 0.1 N NaOH.”

11.2.5 Sodium Hydroxide and Water Blanks. Treat separately 50 ml of 0.1 N NaOH and 50 ml water, as directed under Section 11.2.3, beginning with the sentence, “Pipet 50 ml of the solution into a 150-ml beaker.”

11.3 Spectrophotometer Preparation. Turn on the power; set the wavelength, slit width, and lamp current. Adjust the background corrector as instructed by the manufacturer's manual for the particular atomic absorption spectrophotometer. Adjust the burner and flame characteristics as necessary.

11.4 Analysis. Calibrate the analytical equipment and develop a calibration curve as outlined in Sections 10.2 through 10.4.

11.4.1 Arsenic Samples. Analyze an appropriately sized aliquot of each diluted sample (from Sections 11.2.1 through 11.2.3) until two consecutive peak heights agree within 3 percent of their average value. If applicable, follow the procedures outlined in Section 11.4.1.1. If the sample concentration falls outside the range of the calibration curve, make an appropriate dilution with 0.8 N $HNO_3$ so that the final concentration falls within the range of the curve. Using the calibration curve, determine the arsenic concentration in each sample fraction.

NOTE: Because instruments vary between manufacturers, no detailed operating instructions will be given here. Instead, the instrument manufacturer's detailed operating instructions should be followed.

11.4.1.1 Arsenic Determination at Low Concentration. The lower limit of flame AAS is 10 µg As/ml. If the arsenic concentration of any sample is at a lower level, use the graphite furnace or vapor generator which is available as an accessory component. Flame, graphite furnace, or vapor generators may be used for samples whose concentrations are between 10 and 30 µg/ml. Follow the manufacturer's instructions in the use of such equipment.

11.4.1.1.1 Vapor Generator Procedure. Place a sample containing between 0 and 5 µg of arsenic in the reaction tube, and dilute to 15 ml with water. Since there is some trial and error involved in this procedure, it may be necessary to screen the samples by conventional atomic absorption until an approximate concentration is determined. After determining the approximate concentration, adjust the volume of the sample accordingly. Pipet 15 ml of concentrated HCl into each tube. Add 1 ml of 30 percent KI solution. Place the reaction tube into a 50 °C (120 °F) water bath for 5 minutes. Cool to room temperature. Connect the reaction tube to the vapor generator assembly. When the instrument response has returned to baseline, inject 5.0 ml of 5 percent $NaBH_4$ , and integrate the resulting spectrophotometer signal over a 30-second time period.

11.4.1.1.2 Graphite Furnace Procedure. Dilute the digested sample so that a 5 ml aliquot contains less than 1.5 µg of arsenic. Pipet 5 ml of this digested solution into a 10-ml volumetric flask. Add 1 ml of the 1 percent nickel nitrate solution, 0.5 ml of 50 percent $HNO_3$ , and 1 ml of the 3 percent hydrogen peroxide and dilute to 10 ml with water. The sample is now ready for analysis.

11.4.1.2 Run a blank (0.8 N $HNO_3$ ) and standard at least after every five samples to check the spectrophotometer calibration. The peak height of the blank must pass through a point no further from the origin than ±2 percent of the recorder full scale. The difference between the measured concentration of the standard (the product of the corrected average peak height and the reciprocal of the least squares slope) and the actual concentration of the standard must be less than 7 percent, or recalibration of the analyzer is required.

11.4.1.3 Determine the arsenic concentration in the filter blank (i.e., the average of the two blank values from each lot).

11.4.2 Container Number 3 (Silica Gel). This step may be conducted in the field. Weigh the spent silica gel (or silica gel plus impinger) to the nearest 0.5 g; record this weight.

11.5 Check for matrix effects on the arsenic results. Same as Method 12, Section 11.5.

## *12.0 Data Analysis and Calculations*

12.1 Nomenclature

$B_{ws}$ = Water in the gas stream, proportion by volume.

$C_a$ = Concentration of arsenic as read from the standard curve, µg/ml.

$C_s$ = Arsenic concentration in stack gas, dry basis, converted to standard conditions, g/dsm$^3$ (gr/dscf).

$E_a$ = Arsenic mass emission rate, g/hr (lb/hr).

$F_d$ = Dilution factor (equals 1 if the sample has not been diluted).

I = Percent of isokinetic sampling.

$m_{bi}$ = Total mass of all four impingers and contents before sampling, g.

$m_{fi}$ = Total mass of all four impingers and contents after sampling, g.

$m_n$ = Total mass of arsenic collected in a specific part of the sampling train, µg.

$m_t$ = Total mass of arsenic collected in the sampling train, µg.

$T_m$ = Absolute average dry gas meter temperature ( *see* Figure 108-2), °K (°R).

$V_m$ = Volume of gas sample as measured by the dry gas meter, dry basis, m$^3$ (ft$^3$ ).

$V_{m(std)}$ = Volume of gas sample as measured by the dry gas meter, corrected to standard conditions, $m^3$ ($ft^3$ ).

$V_n$ = Volume of solution in which the arsenic is contained, ml.

$V_{w(std)}$ = Volume of water vapor collected in the sampling train, corrected to standard conditions, $m^3$ ($ft^3$ ).

ΔH = Average pressure differential across the orifice meter ( *see* Figure 108-2), mm $H_2O$ (in. $H_2O$).

12.2 Average Dry Gas Meter Temperatures ($T_m$ ) and Average Orifice Pressure Drop (ΔH). See data sheet (Figure 108-2).

12.3 Dry Gas Volume. Using data from this test, calculate $V_{m(std)}$ according to the procedures outlined in Method 5, Section 12.3.

12.4 Volume of Water Vapor.

$$V_{w(std)} = K_2\left(m_{fi} - m_{bi}\right) \qquad \text{Eq. 108-1}$$

Where:

$K_2$ = 0.001334 $m^3$ /g for metric units.

= 0.047012 $ft^3$ /g for English units.

12.5 Moisture Content.

$$B_{ws} = \frac{V_{w(std)}}{V_{m(std)} + V_{w(std)}} \qquad \text{Eq. 108-2}$$

12.6 Amount of Arsenic Collected.

12.6.1 Calculate the amount of arsenic collected in each part of the sampling train, as follows:

$$m_n = C_a F_d V_n \qquad \text{Eq. 108-3}$$

12.6.2 Calculate the total amount of arsenic collected in the sampling train as follows:

$$m_t = m_{(\text{filters})} + m_{(\text{probe})} + m_{(\text{impingers})} - m_{(\text{filter blank})} - m_{(\text{NaOH blank})} - m_{(\text{water blank})} \qquad \text{Eq. 108-4}$$

12.7 Calculate the arsenic concentration in the stack gas (dry basis, adjusted to standard conditions) as follows:

$$C_s = K_3\left(m_t / V_{m(std)}\right) \qquad \text{Eq. 108-5}$$

Where:

$K_3 = 10^{-6}$ g/µg for metric units

= $1.54 \times 10^{-5}$ gr/µg for English units

12.8 Stack Gas Velocity and Volumetric Flow Rate. Calculate the average stack gas velocity and volumetric flow rate using data obtained in this method and the equations in Sections 12.2 and 12.3 of Method 2.

12.9 Pollutant Mass Rate. Calculate the arsenic mass emission rate as follows:

$$E_a = C_s Q_{sd} \qquad \text{Eq. 108-6}$$

12.10 Isokinetic Variation. Same as Method 5, Section 12.11.

*13.0 Method Performance*

13.1 Sensitivity. The lower limit of flame AAS 10 µg As/ml. The analytical procedure includes provisions for the use of a graphite furnace or vapor generator for samples with a lower arsenic concentration.

*14.0 Pollution Prevention. [Reserved]*

*15.0 Waste Management. [Reserved]*

*16.0 References.*

Same as References 1 through 9 of Method 5, Section 17.0, with the addition of the following:

1. Perkin Elmer Corporation. Analytical Methods for Atomic Absorption Spectrophotometry. 303-0152. Norwalk, Connecticut. September 1976. pp. 5-6.

2. Standard Specification for Reagent Water. In: Annual Book of American Society for Testing and Materials Standards. Part 31: Water, Atmospheric Analysis. American Society for Testing and Materials. Philadelphia, PA. 1974. pp. 40-42.

3. Stack Sampling Safety Manual (Draft). U.S. Environmental Protection Agency, Office of Air Quality Planning and Standard, Research Triangle Park, NC. September 1978.

*17.0 Tables, Diagrams, Flowcharts, and Validation Data*

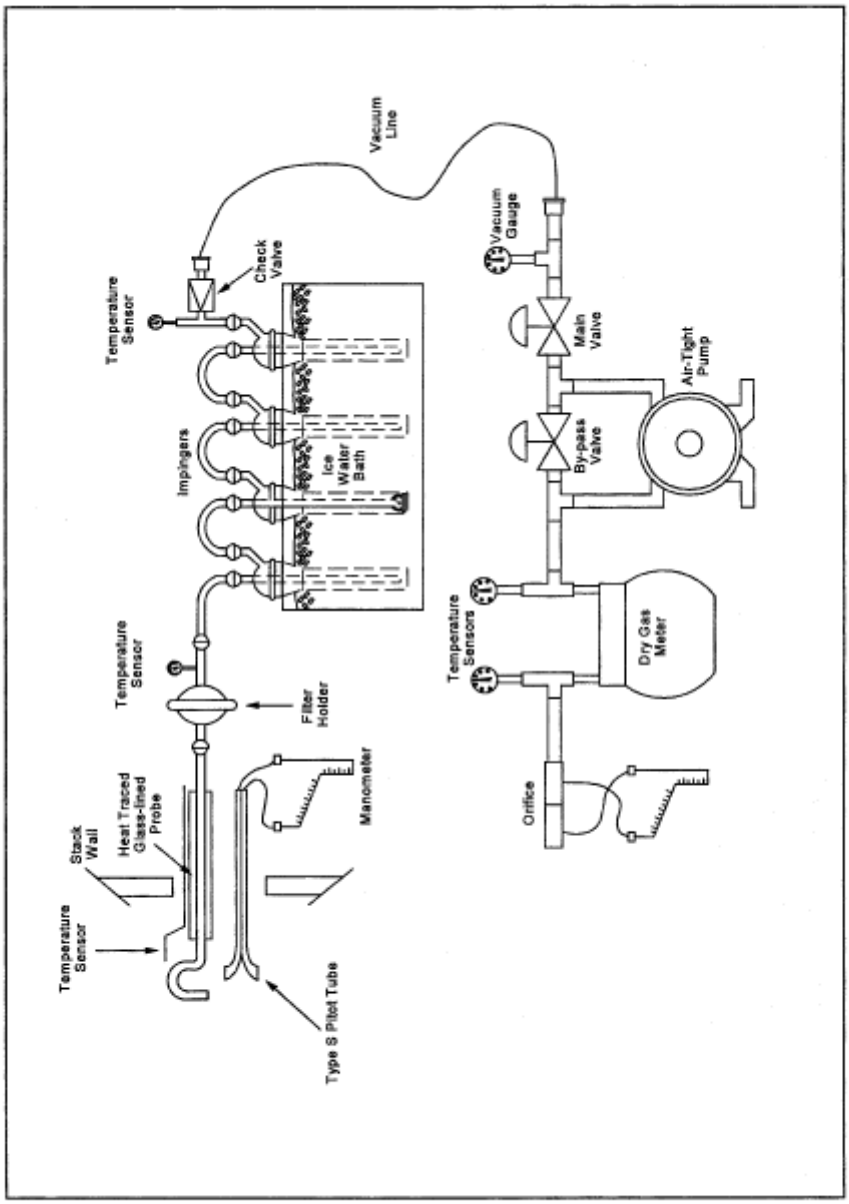


Figure 108-1. Arsenic Sampling Train

Plant _____
Location _____
Operator _____
Date _____
Run No. _____
Sample box No. _____
Meter box No. _____
Meter $\Delta H@$ _____
C factor _____
Pitot tube coefficient, $C_p$ _____

SCHEMATIC OF STACK CROSS SECTION

Ambient temperature _____
Barometric pressure _____
Assumed moisture, % _____
Probe length, (ft.) _____
Nozzle identification No. _____
Average calibrated nozzle diameter, (in.) _____
Probe heater setting _____
Leak rate, (cfm) _____
Probe liner material _____

| Traverse point number | Sampling time | Vacuum | Stack temperature | Velocity head | Pressure differential across orifice meter | Gas meter reading | Gas sample temperature at dry gas meter | | Filter temperature | Temperature of gas leaving condenser or last impinger |
|---|---|---|---|---|---|---|---|---|---|---|
| | | | | | | | Inlet | Outlet | | |
| | min. | (in.Hg) | $(T_s)$ (°F) | $(\Delta P_s)$ (in. $H_2O$) | (in. $H_2O$) | ($ft^3$) | (°F) | (°F) | (°F) | (°F) |
| | | | | | | | | | | |
| | | | | | | | | | | |
| | | | | | | | | | | |
| | | | | | | | | | | |
| | | | | | | | | | | |
| | | | | | | | | | | |
| | | | | | | | | | | |
| | | | | | | | | | | |
| Total | | | | | | | Avg. | Avg. | | |
| Average | | | | | | | Avg. | | | |

Figure 108-2. Arsenic Field Data Sheet.

Method 108A—Determination of Arsenic Content in Ore Samples From Nonferrous Smelters

NOTE: This method does not include all of the specifications ( *e.g.,* equipment and supplies) and procedures ( *e.g.,* sampling and analytical) essential to its performance. Some material is incorporated by reference from other methods in appendix A to 40 CFR part 60. Therefore, to obtain reliable results, persons using this method should have a thorough knowledge of Method 12.

## *1.0 Scope and Application*

1.1 Analytes.

| Analyte | CAS No. | Sensitivity |
|---|---|---|
| Arsenic compounds as arsenic (As) | 7440-38-2 | Lower limit 10 µg/ml or less. |

1.2 Applicability. This method applies to the determination of inorganic As content of process ore and reverberatory matte samples from nonferrous smelters and other sources as specified in an applicable subpart of the regulations.

1.3 Data Quality Objectives. Adherence to the requirements of this method will enhance the quality of the data obtained from air pollutant sampling methods.

## *2.0 Summary of Method*

Arsenic bound in ore samples is liberated by acid digestion and analyzed by flame atomic absorption spectrophotometry (AAS).

## *3.0 Definitions [Reserved]*

## *4.0 Interferences*

Analysis for As by flame AAS is sensitive to the chemical composition and to the physical properties ( *e.g.,* viscosity, pH) of the sample. The analytical procedure includes a check for matrix effects (section 11.5).

## *5.0 Safety*

5.1 Disclaimer. This method may involve hazardous materials, operations, and equipment. This test method may not address all of the safety problems associated with its use. It is the responsibility of the user to establish appropriate safety and health practices and determine the applicability of regulatory limitations prior to performing this test method.

5.2 Corrosive Reagents. The following reagents are hazardous. Personal protective equipment and safe procedures that prevent chemical splashes are recommended. If contact occurs, immediately flush with copious amounts of water for at least 15 minutes. Remove clothing under shower and decontaminate. Treat residual chemical burns as thermal burns.

5.2.1 Hydrochloric Acid (HCl). Highly corrosive liquid with toxic vapors. Vapors are highly irritating to eyes, skin, nose, and lungs, causing severe damage. May cause bronchitis, pneumonia, or edema of lungs. Exposure to concentrations of 0.13 to 0.2 percent can be lethal to humans in a few minutes. Provide ventilation to limit exposure. Reacts with metals, producing hydrogen gas.

5.2.2 Hydrofluoric Acid (HF). Highly corrosive to eyes, skin, nose, throat, and lungs. Reaction to exposure may be delayed by 24 hours or more. Provide ventilation to limit exposure.

5.2.3 Hydrogen Peroxide ($H_2O_2$). Very harmful to eyes. 30% $H_2O_2$ can burn skin, nose, and lungs.

5.2.4 Nitric Acid ($HNO_3$). Highly corrosive to eyes, skin, nose, and lungs. Vapors are highly toxic and can cause bronchitis, pneumonia, or edema of lungs. Reaction to inhalation may be delayed as long as 30 hours and still be fatal. Provide ventilation to limit exposure. Strong oxidizer. Hazardous reaction may occur with organic materials such as solvents.

5.2.5 Sodium Hydroxide (NaOH). Causes severe damage to eyes and skin. Inhalation causes irritation to nose, throat, and lungs. Reacts exothermically with limited amounts of water.

*6.0 Equipment and Supplies*

6.1 Sample Collection and Preparation. The following items are required for sample collection and preparation:

6.1.1 Parr Acid Digestion Bomb. Stainless steel with vapor-tight Teflon cup and cover.

6.1.2 Volumetric Pipets. 2- and 5-ml sizes.

6.1.3 Volumetric Flask. 50-ml polypropylene with screw caps, (one needed per standard).

6.1.4 Funnel. Polyethylene or polypropylene.

6.1.5 Oven. Capable of maintaining a temperature of approximately 105 °C (221 °F).

6.1.6 Analytical Balance. To measure to within 0.1 mg.

6.2 Analysis. The following items are required for analysis:

6.2.1 Spectrophotometer and Recorder. Equipped with an electrodeless discharge lamp and a background corrector to measure absorbance at 193.7 nm. For measuring samples having less than 10 µg As/ml, use a graphite furnace or vapor generator accessory. The recorder shall match the output of the spectrophotometer.

6.2.2 Volumetric Flasks. Class A, 50-ml (one needed per sample and blank), 500-ml, and 1-liter.

6.2.3 Volumetric Pipets. Class A, 1-, 5-, 10-, and 25-ml sizes.

*7.0 Reagents and Standards.*

Unless otherwise indicated, it is intended that all reagents conform to the specifications established by the Committee on Analytical Reagents of the American Chemical Society, where such specifications are available; otherwise, use the best available grade.

7.1 Sample Collection and Preparation. The following reagents are required for sample collection and preparation:

7.1.1 Water. Deionized distilled to meet ASTM D 1193-77 or 91 Type 3 (incorporated by reference—See § 61.18). When high concentrations of organic matter are not expected to be present, the $KMnO_4$ test for oxidizable organic matter may be omitted. Use in all dilutions requiring water.

7.1.2 Nitric Acid Concentrated.

7.1.3 Nitric Acid, 0.5 N. In a 1-liter volumetric flask containing water, add 32 ml of concentrated $HNO_3$ and dilute to volume with water.

7.1.4 Hydrofluoric Acid, Concentrated.

7.1.5 Potassium Chloride (KCl) Solution, 10 percent weight by volume (W/V). Dissolve 10 g KCl in water, add 3 ml concentrated $HNO_3$ , and dilute to 100 ml.

7.1.6 Filter. Teflon filters, 3-micron porosity, 47-mm size. (Available from Millipore Co., type FS, Catalog Number FSLW04700.)

7.1.7 Sodium Borohydride ($NaBH_4$ ), 5 Percent (W/V). Dissolve 50.0 g of $NaBH_4$ in about 500 ml of 0.1 N NaOH in a 1-liter volumetric flask. Then, dilute to exactly 1.0 liter with 0.1 N NaOH.

7.1.8 Nickel Nitrate, 5 Percent Ni (W/V). Dissolve 24.780 g of nickel nitrate hexahydrate [$Ni(NO_3)_2 6H_2O$] in water in a 100-ml volumetric flask, and dilute to 100 ml with water.

7.1.9 Nickel Nitrate, 1 Percent Ni (W/V). Pipet 20 ml of 5 percent nickel nitrate solution into a 100-ml volumetric flask, and dilute to 100 ml with water.

7.2 Analysis. The following reagents and standards are required for analysis:

7.2.2 Sodium Hydroxide, 0.1 N. Dissolve 2.00 g of NaOH in water in a 500-ml volumetric flask. Dilute to volume with water.

7.2.3 Nitric Acid, 0.5 N. Same as in Section 7.1.3.

7.2.4 Potassium Chloride Solution, 10 percent. Same as in Section 7.1.5.

7.2.5 Hydrochloric Acid, Concentrated.

7.2.6 Potassium Iodide (KI), 30 Percent (W/V). Dissolve 300 g of KI in about 500 ml of water in a 1-liter volumetric flask. Then, dilute to exactly 1.0 liter with water.

7.2.7 Hydrogen Peroxide, 3 Percent by Volume. Pipet 50 ml of 30 percent $H_2O_2$ into a 500-ml volumetric flask, and dilute to exactly 500 ml with water.

7.2.8 Stock Arsenic Standard, 1 mg As/ml. Dissolve 1.3203 g of primary grade $As_2O_3$ in 20 ml of 0.1 N NaOH. Slowly add 30 ml of concentrated $HNO_3$, and heat in an oven at 105 °C (221 °F) for 2 hours. Allow to cool, and dilute to 1 liter with deionized distilled water.

7.2.9 Nitrous Oxide. Suitable quality for AAS analysis.

7.2.10 Acetylene. Suitable quality for AAS analysis.

7.2.11 Quality Assurance Audit Samples. When making compliance determinations, and upon availability, audit samples may be obtained from the appropriate EPA regional Office or from the responsible enforcement authority.

NOTE: The responsible enforcement authority should be notified at least 30 days prior to the test date to allow sufficient time for sample delivery.

## *8.0 Sample Collection, Preservation, Transport, and Storage*

8.1 Sample Collection. A sample that is representative of the ore lot to be tested must be taken prior to analysis. (A portion of the samples routinely collected for metals analysis may be used provided the sample is representative of the ore being tested.)

8.2 Sample Preparation. The sample must be ground into a finely pulverized state.

## *9.0 Quality Control*

| Section | Quality control measure | Effect |
|---|---|---|
| 10.2 | Spectrophotometer calibration | Ensure linearity of spectrophotometer response to standards. |
| 11.5 | Check for matrix effects | Eliminate matrix effects. |

## *10.0 Calibration and Standardizations*

NOTE: Maintain a laboratory log of all calibrations.

10.1 Preparation of Standard Solutions. Pipet 1, 5, 10, and 25 ml of the stock As solution into separate 100-ml volumetric flasks. Add 10 ml KCl solution and dilute to the mark with 0.5 N $HNO_3$ . This will give standard concentrations of 10, 50, 100, and 250 µg As/ml. For low-level arsenic samples that require the use of a graphite furnace or vapor generator, follow the procedures in Section 11.3:1. Dilute 10 ml of KCl solution to 100 ml with 0.5 N $HNO_3$ and use as a reagent blank.

10.2 Calibration Curve. Analyze the reagent blank and each standard solution according to the procedures outlined in Section 11.3. Repeat this procedure on each standard solution until two consecutive peaks agree within 3 percent of their average value. Subtract the average peak height (or peak area) of the blank—which must be less than 2 percent of recorder full scale—from the averaged peak heights of each standard solution. If the blank absorbance is greater than 2 percent of full-scale, the probable cause is Hg contamination of a reagent or carry-over of As from a previous sample. Prepare the calibration curve by plotting the corrected peak height of each standard solution versus the corresponding final total As weight in the solution.

10.3 Spectrophotometer Calibration Quality Control. Calculate the least squares slope of the calibration curve. The line must pass through the origin or through a point no further from the origin than ±2 percent of the recorder full scale. Multiply the corrected peak height by the reciprocal of the least squares slope to determine the distance each calibration point lies from the theoretical calibration line. The difference between the calculated concentration values and the actual concentrations must be less than 7 percent for all standards.

NOTE: For instruments equipped with direct concentration readout devices, preparation of a standard curve will not be necessary. In all cases, follow calibration and operational procedures in the manufacturer's instruction manual.

*11.0 Analytical Procedure*

11.1 Sample Preparation. Weigh 50 to 500 mg of finely pulverized sample to the nearest 0.1 mg. Transfer the sample into the Teflon cup of the digestion bomb, and add 2 ml each of concentrated $HNO_3$ and HF. Seal the bomb immediately to prevent the loss of any volatile arsenic compounds that may form. Heat in an oven at 105 °C (221 °F) for 2 hours. Remove the bomb from the oven and allow to cool. Using a Teflon filter, quantitatively filter the digested sample into a 50-ml polypropylene volumetric flask. Rinse the bomb three times with small portions of 0.5 N $HNO_3$ , and filter the rinses into the flask. Add 5 ml of KCl solution to the flask, and dilute to 50 ml with 0.5 N $HNO_3$ .

11.2 Spectrophotometer Preparation.

11.2.1 Turn on the power; set the wavelength, slit width, and lamp current. Adjust the background corrector as instructed by the manufacturer's manual for the particular atomic absorption spectrophotometer. Adjust the burner and flame characteristics as necessary.

11.2.2 Develop a spectrophotometer calibration curve as outlined in Sections 10.2 and 10.3.

11.3 Arsenic Determination. Analyze an appropriately sized aliquot of each diluted sample (from Section 11.1) until two consecutive peak heights agree within 3 percent of their average value. If applicable, follow the procedures outlined in Section 11.3.1. If the sample concentration falls outside the range of the calibration curve, make an appropriate dilution with 0.5 N $HNO_3$ so that the final concentration falls within the range of the curve. Using the calibration curve, determine the As concentration in each sample.

NOTE: Because instruments vary between manufacturers, no detailed operating instructions will be given here. Instead, the instrument manufacturer's detailed operating instructions should be followed.

11.3.1 Arsenic Determination at Low Concentration. The lower limit of flame AAS is 10 µg As/ml. If the arsenic concentration of any sample is at a lower level, use the vapor generator or graphite furnace which is available as an accessory component. Flame, graphite furnace, or vapor generators may be used for samples whose concentrations are between 10 and 30 µg/ml. Follow the manufacturer's instructions in the use of such equipment.

11.3.1.1 Vapor Generator Procedure. Place a sample containing between 0 and 5 µg of arsenic in the reaction tube, and dilute to 15 ml with water. Since there is some trial and error involved in this procedure, it may be necessary to screen the samples by conventional AAS until an approximate concentration is determined. After determining the approximate concentration, adjust the volume of the sample accordingly. Pipet 15 ml of concentrated HCl into each

tube. Add 1 ml of 30 percent KI solution. Place the reaction tube into a 50 °C (120 °F) water bath for 5 minutes. Cool to room temperature. Connect the reaction tube to the vapor generator assembly. When the instrument response has returned to baseline, inject 5.0 ml of 5 percent $NaBH_4$ and integrate the resulting spectrophotometer signal over a 30-second time period.

11.3.1.2 Graphite Furnace Procedure. Pipet 5 ml of the digested solution into a 10-ml volumetric flask. Add 1 ml of the 1 percent nickel nitrate solution, 0.5 ml of 50 percent $HNO_3$ , and 1 ml of the 3 percent $H_2O_2$ , and dilute to 10 ml with water. The sample is now ready to inject in the furnace for analysis.

11.4 Run a blank and standard at least after every five samples to check the spectrophotometer calibration. The peak height of the blank must pass through a point no further from the origin than ±2 percent of the recorder full scale. The difference between the measured concentration of the standard (the product of the corrected average peak height and the reciprocal of the least squares slope) and the actual concentration of the standard must be less than 7 percent, or recalibration of the analyzer is required.

11.5 Mandatory Check for Matrix Effects on the Arsenic Results. Same as Method 12, Section 11.5.

*12.0 Data Analysis and Calculations*

12.1 Calculate the percent arsenic in the ore sample as follows:

$$\% As = \frac{5 C_a F_d}{W} \qquad \text{Eq. 108A-1}$$

Where:

$C_a$ = Concentration of As as read from the standard curve, µg/ml.

$F_d$ = Dilution factor (equals to 1 if the sample has not been diluted).

W = Weight of ore sample analyzed, mg.

5 = (50 ml sample “ 100)/($10^3$ µg/mg).

*13.0 Method Performance*

13.1 Sensitivity. The lower limit of flame AAS is 10 µg As/ml. The analytical procedure includes provisions for the use of a graphite furnace or vapor generator for samples with a lower arsenic concentration.

*14.0 Pollution Prevention. [Reserved]*

*15.0 Waste Management. [Reserved]*

*16.0 References*

Same as References 1 through 9 of Section 17.0 of Method 5, with the addition of the following:

1. Perkin Elmer Corporation. Analytical Methods of Atomic Absorption Spectrophotometry. 303-0152. Norwalk, Connecticut. September 1976. pp 5-6.

2. Ringwald, D. Arsenic Determination on Process Materials from ASARCO's Copper Smelter in Tacoma, Washington. Unpublished Report. Prepared for Emission Measurement Branch, Emission Standards and Engineering Division, U.S. Environmental Protection Agency, Research Triangle Park, North Carolina. August 1980. 35 pp.

3. Stack Sampling Safety Manual (Draft). U.S. Environmental Protection Agency, Office of Air Quality Planning and Standard, Research Triangle Park, NC. September 1978.

*17.0 Tables, Diagrams, Flowcharts, and Validation Data. [Reserved]*

Method 108B—Determination of Arsenic Content in Ore Samples From Nonferrous Smelters

NOTE: This method does not include all of the specifications ( *e.g.,* equipment and supplies) and procedures ( *e.g.,* sampling and analytical) essential to its performance. Some material is incorporated by reference from other methods in this appendix and in appendix A to 40 CFR part 60. Therefore, to obtain reliable results, persons using this method should have a thorough knowledge of at least the following additional test methods: Method 12 and Method 108A.

*1.0 Scope and Application*

1.1 Analytes.

| Analyte | CAS No. | Sensitivity |
|---|---|---|
| Arsenic compounds as arsenic (As) | 7440-38-2 | Lower limit 10 µg/ml. |

1.2 Applicability. This method applies to the determination of inorganic As content of process ore and reverberatory matte samples from nonferrous smelters and other sources as specified in an applicable subpart of the regulations. Samples resulting in an analytical concentration greater than 10 µg As/ml may be analyzed by this method. For lower level arsenic samples, Method 108C should be used.

1.3 Data Quality Objectives. Adherence to the requirements of this method will enhance the quality of the data obtained from air pollutant sampling methods.

*2.0 Summary of Method*

Arsenic bound in ore samples is liberated by acid digestion and analyzed by flame atomic absorption spectrophotometry (AAS).

*3.0 Definitions [Reserved]*

*4.0 Interferences*

Analysis for As by flame AAS is sensitive to the chemical composition and to the physical properties ( *e.g.,* viscosity, pH) of the sample. The analytical procedure includes a check for matrix effects (Section 11.4).

*5.0 Safety*

5.1 Disclaimer. This method may involve hazardous materials, operations, and equipment. This test method may not address all of the safety problems associated with its use. It is the responsibility of the user to establish appropriate safety and health practices and determine the applicability of regulatory limitations prior to performing this test method.

5.2 Corrosive Reagents. The following reagents are hazardous. Personal protective equipment and safe procedures that prevent chemical splashes are recommended. If contact occurs, immediately flush with copious amounts of water for at least 15 minutes. Remove clothing under shower and decontaminate. Treat residual chemical burns as thermal burns.

5.2.1 Hydrochloric acid (HCl). Highly corrosive liquid with toxic vapors. Vapors are highly irritating to eyes, skin, nose, and lungs, causing severe damage. May cause bronchitis, pneumonia, or edema of lungs. Exposure to concentrations of 0.13 to 0.2 percent can be lethal to humans in a few minutes. Provide ventilation to limit exposure. Reacts with metals, producing hydrogen gas.

5.2.2 Hydrofluoric Acid (HF). Highly corrosive to eyes, skin, nose, throat, and lungs. Reaction to exposure may be delayed by 24 hours or more. Provide ventilation to limit exposure.

5.2.3 Nitric Acid ($HNO_3$ ). Highly corrosive to eyes, skin, nose, and lungs. Vapors are highly toxic and can cause bronchitis, pneumonia, or edema of lungs. Reaction to inhalation may be delayed as long as 30 hours and still be fatal. Provide ventilation to limit exposure. Strong oxidizer. Hazardous reaction may occur with organic materials such as solvents.

5.2.4 Perchloric Acid ($HClO_4$ ). Corrosive to eyes, skin, nose, and throat. Provide ventilation to limit exposure. Very strong oxidizer. Keep separate from water and oxidizable materials to prevent vigorous evolution of heat, spontaneous combustion, or explosion. Heat solutions containing $HClO_4$ only in hoods specifically designed for $HClO_4$ .

## *6.0 Equipment and Supplies*

6.1 Sample Preparation. The following items are required for sample preparation:

6.1.1 Teflon Beakers. 150-ml.

6.1.2 Graduated Pipets. 5-ml disposable.

6.1.3 Graduated Cylinder. 50-ml.

6.1.4 Volumetric Flask. 100-ml.

6.1.5 Analytical Balance. To measure within 0.1 mg.

6.1.6 Hot Plate.

6.1.7 Perchloric Acid Fume Hood.

6.2 Analysis. The following items are required for analysis:

6.2.1 Spectrophotometer. Equipped with an electrodeless discharge lamp and a background corrector to measure absorbance at 193.7 nm.

6.2.2 Beaker and Watch Glass. 400-ml.

6.2.3 Volumetric Flask. 1-liter.

6.2.4 Volumetric Pipets. 1-, 5-, 10-, and 25-ml.

## *7.0 Reagents and Standards*

Unless otherwise indicated, it is intended that all reagents conform to the specifications established by the Committee on Analytical Reagents of the American Chemical Society, where such specifications are available; otherwise, use the best available grade.

7.1 Sample Preparation. The following reagents are required for sample preparation:

7.1.1 Water. Deionized distilled to meet ASTM D 1193-77 or 91 Type 3 (incorporated by reference—see § 61.18).

7.1.2 Nitric Acid, Concentrated.

7.1.3 Hydrofluoric Acid, Concentrated.

7.1.4 Perchloric Acid, 70 Percent.

7.1.5 Hydrochloric Acid, Concentrated.

7.2 Analysis. The following reagents and standards are required for analysis:

7.2.1 Water. Same as in Section 7.1.1.

7.2.2 Stock Arsenic Standard, 1.0 mg As/ml. Dissolve 1.3203 g of primary grade $As_2 0_3$ [dried at 105 °C (221 °F)] in a 400-ml beaker with 10 ml of $HNO_3$ and 5 ml of HCl. Cover with a watch glass, and heat gently until dissolution is complete. Add 10 ml of $HNO_3$ and 25 ml of $HClO_4$ , evaporate to strong fumes of $HClO_4$ , and reduce to about 20 ml volume. Cool, add 100 ml of water and 100 ml of HCl, and transfer quantitatively to a 1-liter volumetric flask. Dilute to volume with water and mix.

7.2.3 Acetylene. Suitable quality for AAS analysis.

7.2.4 Air. Suitable quality for AAS analysis.

*8.0 Sample Collection, Preservation, Transport, and Storage*

Same as in Method 108A, Sections 8.1 and 8.2.

*9.0 Quality Control*

| Section | Quality control measure | Effect |
|---|---|---|
| 10.2 | Spectrophotometer calibration | Ensure linearity of spectrophotometer response to standards. |
| 11.4 | Check for matrix effects | Eliminate matrix effects. |

*10.0 Calibration and Standardization*

NOTE: Maintain a laboratory log of all calibrations.

10.1 Preparation of Standard Solutions. Pipet 1, 5, 10, and 25 ml of the stock As solution into separate 100-ml volumetric flasks. Add 2 ml of $HClO_4$ , 10 ml of HCl, and dilute to the mark with water. This will provide standard concentrations of 10, 50, 100, and 250 µg As/ml.

10.2 Calibration Curve and Spectrophotometer Calibration Quality Control. Same as Method 108A, Sections 10.2 and 10.3

*11.0 Analytical Procedure*

11.1 Sample Preparation. Weigh 100 to 1000 mg of finely pulverized sample to the nearest 0.1 mg. Transfer the sample to a 150-ml Teflon beaker. Dissolve the sample by adding 15 ml of $HNO_3$ , 10 ml of HCl, 10 ml of HF, and 10 ml of $HClO_4$ in the exact order as described, and let stand for 10 minutes. In a $HClO_4$ fume hood, heat on a hot plate until 2-3 ml of $HClO_4$ remain, then cool. Add 20 ml of water and 10 ml of HCl. Cover and warm until the soluble salts are in solution. Cool, and transfer quantitatively to a 100-ml volumetric flask. Dilute to the mark with water.

11.2 Spectrophotometer Preparation. Same as in Method 108A, Section 11.2.

11.3 Arsenic Determination. If the sample concentration falls outside the range of the calibration curve, make an appropriate dilution with 2 percent $HClO_4$ /10 percent HCl (prepared by diluting 2 ml concentrated $HClO_4$ and 10 ml

concentrated HCl to 100 ml with water) so that the final concentration falls within the range of the curve. Using the calibration curve, determine the As concentration in each sample.

NOTE: Because instruments vary between manufacturers, no detailed operating instructions will be given here. Instead, the instrument manufacturer's detailed operating instructions should be followed.

Run a blank and standard at least after every five samples to check the spectrophotometer calibration. The peak height of the blank must pass through a point no further from the origin than ±2 percent of the recorder full scale. The difference between the measured concentration of the standard (the product of the corrected average peak height and the reciprocal of the least squares slope) and the actual concentration of the standard must be less than 7 percent, or recalibration of the analyzer is required.

11.4 Mandatory Check for Matrix Effects on the Arsenic Results. Same as Method 12, Section 11.5.

*12.0 Data Analysis and Calculations*

Same as in Method 108A, Section 12.0.

*13.0 Method Performance*

13.1 Sensitivity. The lower limit of flame AAS is 10 µg As/ml.

*14.0 Pollution Prevention [Reserved]*

*15.0 Waste Management [Reserved]*

*16.0 References*

Same as in Method 108A, Section 16.0.

*17.0 Tables, Diagrams, Flowcharts, and Validation Data [Reserved]*

Method 108C—Determination of Arsenic Content in Ore Samples From Nonferrous Smelters (Molybdenum Blue Photometric Procedure)

NOTE: This method does not include all of the specifications ( *e.g.,* equipment and supplies) and procedures ( *e.g.,* sampling and analytical) essential to its performance. Some material is incorporated by reference from other methods in this part. Therefore, to obtain reliable results, persons using this method should have a thorough knowledge of at least Method 108A.

*1.0 Scope and Application*

1.1 Analytes.

| Analyte | CAS No. | Sensitivity |
|---|---|---|
| Arsenic compounds as arsenic (As) | 7440-38-2 | Lower limit 0.0002 percent As by weight. |

1.2 Applicability. This method applies to the determination of inorganic As content of process ore and reverberatory matte samples from nonferrous smelters and other sources as specified in an applicable subpart of the regulations.

1.3 Data Quality Objectives. Adherence to the requirements of this method will enhance the quality of the data obtained from air pollutant sampling methods.

*2.0 Summary of Method*

Arsenic bound in ore samples is liberated by acid digestion and analyzed by the molybdenum blue photometric procedure.

*3.0 Definitions. [Reserved]*

*4.0 Interferences. [Reserved]*

*5.0 Safety*

5.1 Disclaimer. This method may involve hazardous materials, operations, and equipment. This test method may not address all of the safety problems associated with its use. It is the responsibility of the user to establish appropriate safety and health practices and determine the applicability of regulatory limitations prior to performing this test method.

5.2 Corrosive Reagents. The following reagents are hazardous. Personal protective equipment and safe procedures that prevent chemical splashes are recommended. If contact occurs, immediately flush with copious amounts of water for at least 15 minutes. Remove clothing under shower and decontaminate. Treat residual chemical burns as thermal burns.

5.2.1 Hydrochloric Acid (HCl). Highly corrosive liquid with toxic vapors. Vapors are highly irritating to eyes, skin, nose, and lungs, causing severe damage. May cause bronchitis, pneumonia, or edema of lungs. Exposure to concentrations of 0.13 to 0.2 percent can be lethal to humans in a few minutes. Provide ventilation to limit exposure. Reacts with metals, producing hydrogen gas.

5.2.2 Hydrofluoric Acid (HF). Highly corrosive to eyes, skin, nose, throat, and lungs. Reaction to exposure may be delayed by 24 hours or more. Provide ventilation to limit exposure.

5.2.3 Nitric Acid ($HNO_4$ ). Highly corrosive to eyes, skin, nose, and lungs. Vapors are highly toxic and can cause bronchitis, pneumonia, or edema of lungs. Reaction to inhalation may be delayed as long as 30 hours and still be fatal. Provide ventilation to limit exposure. Strong oxidizer. Hazardous reaction may occur with organic materials such as solvents.

5.2.4 Perchloric Acid ($HClO_4$ ). Corrosive to eyes, skin, nose, and throat. Provide ventilation to limit exposure. Very strong oxidizer. Keep separate from water and oxidizable materials to prevent vigorous evolution of heat, spontaneous combustion, or explosion. Heat solutions containing $HClO_4$ only in hoods specifically designed for $HClO_4$ .

5.2.5 Sulfuric acid ($H_2 SO_4$ ). Rapidly destructive to body tissue. Will cause third degree burns. Eye damage may result in blindness. Inhalation may be fatal from spasm of the larynx, usually within 30 minutes. May cause lung tissue damage with edema. 3 $mg/m^3$ will cause lung damage in uninitiated. 1 $mg/m^3$ for 8 hours will cause lung damage or, in higher concentrations, death. Provide ventilation to limit inhalation. Reacts violently with metals and organics.

*6.0 Equipment and Supplies*

6.1 Sample Preparation. The following items are required for sample preparation:

6.1.1 Analytical Balance. To measure to within 0.1 mg.

6.1.2 Erlenmeyer Flask. 300-ml.

6.1.3 Hot Plate.

6.1.4 Distillation Apparatus. No. 6, in ASTM E 50-82, 86, or 90 (Reapproved 1995)(incorporated by reference—see § 61.18); detailed in Figure 108C-1.

6.1.5 Graduated Cylinder. 50-ml.

6.1.6 Perchloric Acid Fume Hood.

6.2 Analysis. The following items are required for analysis:

6.2.1 Spectrophotometer. Capable of measuring at 660 nm.

6.2.2 Volumetric Flasks. 50- and 100-ml.

*7.0 Reagents and Standards*

Unless otherwise indicated, it is intended that all reagents conform to the specifications established by the Committee on Analytical Reagents of the American Chemical Society, where such specifications are available; otherwise, use the best available grade.

7.1 Sample Preparation. The following reagents are required for sample preparation:

7.1.1 Water. Deionized distilled to meet ASTM D 1193-77 or 91 Type 3 (incorporated by reference—see § 61.18). When high concentrations of organic matter are not expected to be present, the $KMnO_4$ test for oxidizable organic matter may be omitted. Use in all dilutions requiring water.

7.1.2 Nitric Acid, Concentrated.

7.1.3 Hydrofluoric Acid, Concentrated.

7.1.4 Sulfuric Acid, Concentrated.

7.1.5 Perchloric Acid, 70 Percent.

7.1.6 Hydrochloric Acid, Concentrated.

7.1.7 Dilute Hydrochloric Acid. Add one part concentrated HCl to nine parts water.

7.1.8 Hydrazine Sulfate ($(NH_2)_2 \cdot H_2SO_4$).

7.1.9 Potassium Bromide (KBr).

7.1.10 Bromine Water, Saturated.

7.2 Analysis. The following reagents and standards are required for analysis:

7.2.1 Water. Same as in Section 7.1.1.

7.2.2 Methyl Orange Solution, 1 g/liter.

7.2.3 Ammonium Molybdate Solution, 5 g/liter. Dissolve 0.5 g $(NH_4)Mo_7O_{24} \cdot 4H_2O$ in water in a 100-ml volumetric flask, and dilute to the mark. This solution must be freshly prepared.

7.2.4 Standard Arsenic Solution, 10 µg As/ml. Dissolve 0.13203 g of $As_2O_3$ in 100 ml HCl in a 1-liter volumetric flask. Add 200 ml of water, cool, dilute to the mark with water, and mix. Transfer 100 ml of this solution to a 1-liter volumetric flask, add 40 ml HCl, cool, dilute to the mark, and mix.

7.2.5 Hydrazine Sulfate Solution, 1 g/liter. Dissolve 0.1 g of [$(NH_2)_2 \cdot H_2SO_4$] in water, and dilute to 100 ml in a volumetric flask. This solution must be freshly prepared.

7.2.6 Potassium Bromate ($KBrO_3$) Solution, 0.03 Percent Weight by Volume (W/V). Dissolve 0.3 g $KBrO_3$ in water, and dilute to 1 liter with water.

7.2.7 Ammonium Hydroxide ($NH_4OH$), Concentrated.

7.2.8 Boiling Granules.

7.2.9 Hydrochloric Acid, 50 percent by volume. Dilute equal parts concentrated HCl with water.

*8.0 Sample Collection, Preservation, Transport, and Storage*

Same as in Method 108A, Sections 8.1 and 8.2.

*9.0 Quality Control*

| Section | Quality control measure | Effect |
|---|---|---|
| 10.2 | Calibration curve preparation | Ensure linearity of spectrophotometric response to standards. |

*10.0 Calibration and Standardizations*

NOTE: Maintain a laboratory log of all calibrations.

10.1 Preparation of Standard Solutions. Transfer 1.0, 2.0, 4.0, 8.0, 12.0, 16.0, and 20.0 ml of standard arsenic solution (10 µg/ml) to each of seven 50-ml volumetric flasks. Dilute to 20 ml with dilute HCl. Add one drop of methyl orange solution and neutralize to the yellow color with dropwise addition of $NH_4OH$. Just bring back to the red color by dropwise addition of dilute HCl, and add 10 ml in excess. Proceed with the color development as described in Section 11.2.

10.2 Calibration Curve. Plot the spectrophotometric readings of the calibration solutions against µg As per 50 ml of solution. Use this curve to determine the As concentration of each sample.

10.3 Spectrophotometer Calibration Quality Control. Calculate the least squares slope of the calibration curve. The line must pass through the origin or through a point no further from the origin than ±2 percent of the recorder full scale. Multiply the corrected peak height by the reciprocal of the least squares slope to determine the distance each calibration point lies from the theoretical calibration line. The difference between the calculated concentration values and the actual concentrations must be less than 7 percent for all standards.

*11.0 Analytical Procedure*

11.1 Sample Preparation.

11.1.1 Weigh 1.0 g of finely pulverized sample to the nearest 0.1 mg. Transfer the sample to a 300 ml Erlenmeyer flask and add 15 ml of $HNO_3$, 4 ml HCl, 2 ml HF, 3 ml $HClO_4$, and 15 ml $H_2SO_4$, in the order listed. In a $HClO_4$ fume hood, heat on a hot plate to decompose the sample. Then heat while swirling over an open flame until dense white fumes evolve. Cool, add 15 ml of water, swirl to hydrate the $H_2SO_4$ completely, and add several boiling granules. Cool to room temperature.

11.1.2 Add 1 g of KBr, 1 g hydrazine sulfate, and 50 ml HCl. Immediately attach the distillation head with thermometer and dip the side arm into a 50-ml graduated cylinder containing 25 ml of water and 2 ml of bromine water. Keep the graduated cylinder immersed in a beaker of cold water during distillation. Distill until the temperature of the vapor in the flask reaches 107 °C (225 °F). When distillation is complete, remove the flask from the hot plate, and simultaneously wash down the side arm with water as it is removed from the cylinder.

11.1.3 If the expected arsenic content is in the range of 0.0020 to 0.10 percent, dilute the distillate to the 50-ml mark of the cylinder with water, stopper, and mix. Transfer a 5.0-ml aliquot to a 50-ml volumetric flask. Add 10 ml of water and a boiling granule. Place the flask on a hot plate, and heat gently until the bromine is expelled and the color of methyl orange indicator persists upon the addition of 1 to 2 drops. Cool the flask to room temperature. Neutralize just to the yellow color of the indicator with dropwise additions of $NH_4$ OH. Bring back to the red color by dropwise addition of dilute HCl, and add 10 ml excess. Proceed with the molybdenum blue color development as described in Section 11.2.

11.1.4 If the expected arsenic content is in the range of 0.0002 to 0.0010 percent As, transfer either the entire initial distillate or the measured remaining distillate from Section 11.1.2 to a 250-ml beaker. Wash the cylinder with two successive portions of concentrated $HNO_3$ , adding each portion to the distillate in the beaker. Add 4 ml of concentrated $HClO_4$ , a boiling granule, and cover with a flat watch glass placed slightly to one side. Boil gently on a hot plate until the volume is reduced to approximately 10 ml. Add 3 ml of $HNO_3$ , and continue the evaporation until $HClO_4$ is refluxing on the beaker cover. Cool briefly, rinse the underside of the watch glass and the inside of the beaker with about 3-5 ml of water, cover, and continue the evaporation to expel all but 2 ml of the $HClO_4$ .

NOTE: If the solution appears cloudy due to a small amount of antimony distilling over, add 4 ml of 50 percent HCl and 5 ml of water, cover, and warm gently until clear. If cloudiness persists, add 5 ml of $HNO_3$ and 2 ml $H_2$ $SO_4$ . Continue the evaporation of volatile acids to solubilize the antimony until dense white fumes of $H_2$ $SO_4$ appear. Retain at least 1 ml of the $H_2$ $SO_4$ .

11.1.5 To the 2 ml of $HClO_4$ solution or 1 ml of $H_2$ $SO_4$ solution, add 15 ml of water, boil gently for 2 minutes, and then cool. Proceed with the molybdenum blue color development by neutralizing the solution directly in the beaker just to the yellow indicator color by dropwise addition of $NH_4$ OH. Obtain the red color by dropwise addition of dilute HCl. Transfer the solution to a 50-ml volumetric flask. Rinse the beaker successively with 10 ml of dilute HCl, followed by several small portions of water. At this point the volume of solution in the flask should be no more than 40 ml. Continue with the color development as described in Section 11.2.

11.2 Analysis.

11.2.1 Add 1 ml of $KBrO_3$ solution to the flask and heat on a low-temperature hot plate to about 50 °C (122 °F) to oxidize the arsenic and methyl orange. Add 5.0 ml of ammonium molybdate solution to the warm solution and mix. Add 2.0 ml of hydrazine sulfate solution, dilute until the solution comes within the neck of the flask, and mix. Place the flask in a 400 ml beaker, 80 percent full of boiling water, for 10 minutes. Enough heat must be supplied to prevent the water bath from cooling much below the boiling point upon inserting the volumetric flask. Remove the flask, cool to room temperature, dilute to the mark, and mix.

11.2.2 Transfer a suitable portion of the reference solution to an absorption cell, and adjust the spectrophotometer to the initial setting using a light band centered at 660 nm. While maintaining this spectrophotometer adjustment, take the readings of the calibration solutions followed by the samples.

## *12.0 Data Analysis and Calculations*

Same as in Method 108A, Section 12.0.

## *13.0 Method Performance. [Reserved]*

## *14.0 Pollution Prevention. [Reserved]*

## *15.0 Waste Management. [Reserved]*

## *16.0 References*

1. Ringwald, D. Arsenic Determination on Process Materials from ASARCO's Copper Smelter in Tacoma, Washington. Unpublished Report. Prepared for the Emission Measurement Branch, Technical Support Division, U.S. Environmental Protection Agency, Research Triangle Park, North Carolina. August 1980. 35 pp.

*17.0 Tables, Diagrams, Flowcharts, and Validation Data*

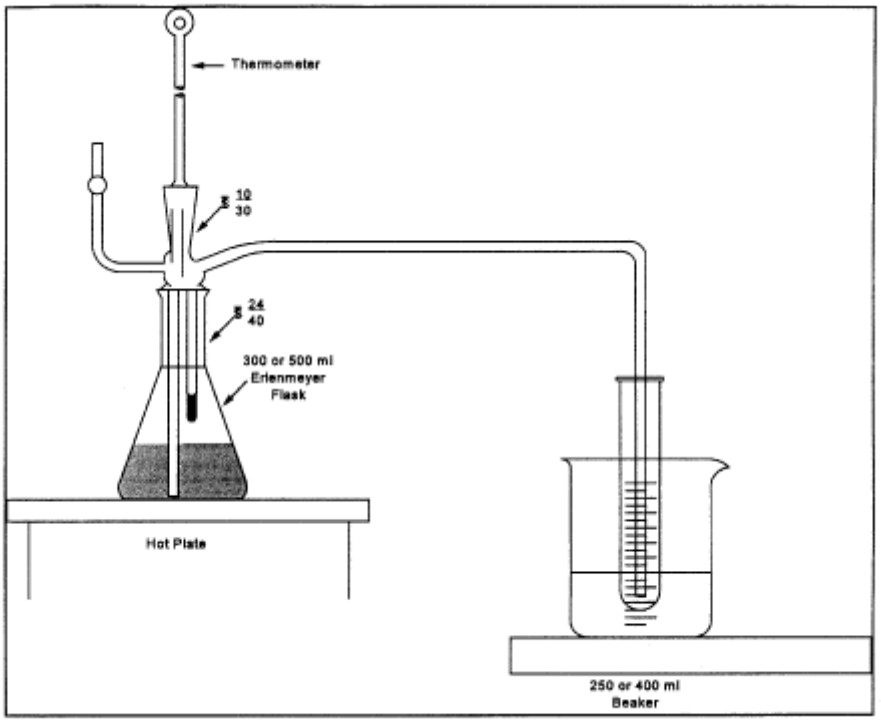


**Figure 108C-1. Distillation Apparatus.**

Method 111—Determination of Polonium-210 Emissions From Stationary Sources

NOTE: This method does not include all of the specifications ( *e.g.,* equipment and supplies) and procedures ( *e.g.,* sampling and analytical) essential to its performance. Some material is incorporated by reference from methods in appendix A to 40 CFR part 60. Therefore, to obtain reliable results, persons using this method should have a thorough knowledge of at least the following additional test methods: Method 1, Method 2, Method 3, and Method 5.

*1.0 Scope and Application*

1.1 Analytes.

| Analyte | CAS No. | Sensitivity |
|---|---|---|
| Polonium | 7440-08-6 | Not specified. |

1.2 Applicability. This method is applicable for the determination of the polonium-210 content of particulate matter samples collected from stationary source exhaust stacks, and for the use of these data to calculate polonium-210 emissions from individual sources and from all affected sources at a facility.

1.3 Data Quality Objectives. Adherence to the requirements of this method will enhance the quality of the data obtained from air pollutant sampling methods.

*2.0 Summary of Method*

A particulate matter sample, collected according to Method 5, is analyzed for polonium-210 content: the polonium-210 in the sample is put in solution, deposited on a metal disc, and the radioactive disintegration rate measured. Polonium in acid solution spontaneously deposits on surfaces of metals that are more electropositive than polonium. This principle is routinely used in the radiochemical analysis of polonium-210. Data reduction procedures are

provided, allowing the calculation of polonium-210 emissions from individual sources and from all affected sources at a facility, using data obtained from Methods 2 and 5 and from the analytical procedures herein.

## *3.0 Definitions [Reserved]*

## *4.0 Interferences [Reserved]*

## *5.0 Safety*

5.1 Disclaimer. This method may involve hazardous materials, operations, and equipment. This test method may not address all of the safety problems associated with its use. It is the responsibility of the user of this test method to establish appropriate safety and health practices and determine the applicability of regulatory limitations prior to performing this test method.

5.2 Corrosive Reagents. The following reagents are hazardous. Personal protective equipment and safe procedures are useful in preventing chemical splashes. If contact occurs, immediately flush with copious amounts of water at least 15 minutes. Remove clothing under shower and decontaminate. Treat residual chemical burns as thermal burns.

5.2.1 Hydrochloric Acid (HCl). Highly corrosive liquid with toxic vapors. Vapors are highly irritating to eyes, skin, nose, and lungs, causing severe damage. May cause bronchitis, pneumonia, or edema of lungs. Exposure to concentrations of 0.13 to 0.2 percent can be lethal to humans in a few minutes. Provide ventilation to limit exposure. Reacts with metals, producing hydrogen gas.

5.2.2 Hydrofluoric Acid (HF). Highly corrosive to eyes, skin, nose, throat, and lungs. Reaction to exposure may be delayed by 24 hours or more. Provide ventilation to limit exposure.

5.2.3 Nitric Acid ($HNO_3$ ). Highly corrosive to eyes, skin, nose, and lungs. Vapors cause bronchitis, pneumonia, or edema of lungs. Reaction to inhalation may be delayed as long as 30 hours and still be fatal. Provide ventilation to limit exposure. Strong oxidizer. Hazardous reaction may occur with organic materials such as solvents.

5.2.4 Perchloric Acid ($HClO_4$ ). Corrosive to eyes, skin, nose, and throat. Provide ventilation to limit exposure. Keep separate from water and oxidizable materials to prevent vigorous evolution of heat, spontaneous combustion, or explosion. Heat solutions containing $HClO_4$ only in hoods specifically designed for $HClO_4$ .

## *6.0 Equipment and Supplies*

6.1 Alpha Spectrometry System. Consisting of a multichannel analyzer, biasing electronics, silicon surface barrier detector, vacuum pump and chamber.

6.2 Constant Temperature Bath at 85 °C (185 °F).

6.3 Polished Silver Discs. 3.8 cm diameter, 0.4 mm thick with a small hole near the edge.

6.4 Glass Beakers. 400 ml, 150 ml.

6.5 Hot Plate, Electric.

6.6 Fume Hood.

6.7 Teflon Beakers, 150 ml.

6.8 Magnetic Stirrer.

6.9 Stirring Bar.

6.10 Hooks. Plastic or glass, to suspend plating discs.

6.11 Internal Proportional Counter. For measuring alpha particles.

6.12 Nucleopore Filter Membranes. 25 mm diameter, 0.2 micrometer pore size or equivalent.

6.13 Planchets. Stainless steel, 32 mm diameter with 1.5 mm lip.

6.14 Transparent Plastic Tape. 2.5 cm wide with adhesive on both sides.

6.15 Epoxy Spray Enamel.

6.16 Suction Filter Apparatus. For 25 mm diameter filter.

6.17 Wash Bottles, 250 ml capacity.

6.18 Graduated Cylinder, plastic, 25 ml capacity.

6.19 Volumetric Flasks, 100 ml, 250 ml.

## *7.0 Reagents and Standards*

Unless otherwise indicated, it is intended that all reagents conform to the specifications established by the Committee on Analytical Reagents of the American Chemical Society, where such specifications are available; otherwise, use the best available grade.

7.1 Ascorbic Acid.

7.2 Ammonium Hydroxide ($NH_4OH$), 15 M.

7.3 Water. Deionized distilled, to conform to ASTM D 1193-77 or 91 (incorporated by reference—see § 61.18), Type 3. Use in all dilutions requiring water.

7.4 Ethanol ($C_2H_5OH$), 95 percent.

7.5 Hydrochloric Acid, 12 M.

7.6 Hydrochloric Acid, 1 M. Dilute 83 ml of the 12 M HCl to 1 liter with distilled water.

7.7 Hydrofluoric Acid, 29 M.

7.8 Hydrofluoric Acid, 3 M. Dilute 52 ml of the 29 M HF to 500 ml with distilled water. Use a plastic graduated cylinder and storage bottle.

7.9 Lanthanum Carrier, 0.1 mg $La^{+3}$/ml. Dissolve 0.078 gram lanthanum nitrate, $La(NO_3)_3 \cdot 6H_2O$ in 250 ml of 1 M HCl.

7.10 Nitric Acid, 16 M.

7.11 Perchloric Acid, 12 M.

7.12 Polonium-209 Solution.

7.13 Silver Cleaner. Any mild abrasive commercial silver cleaner.

7.14 Degreaser.

7.15 Standard Solution. Standardized solution of an alpha-emitting actinide element, such as plutonium-239 or americium-241.

*8.0 Sample Collection, Preservation, Transport, and Storage. [Reserved]*

*9.0 Quality Control*

9.1 General Requirement.

9.1.1 All analysts using this method are required to demonstrate their ability to use the method and to define their respective accuracy and precision criteria.

*9.2 Miscellaneous Quality Control Measures*

| Section | Quality control measure | Effect |
|---|---|---|
| 10.1 | Standardization of alpha spectrometry system | Ensure precision of sample analyses. |
| 10.3 | Standardization of internal proportional counter | Ensure precise sizing of sample aliquot. |
| 11.1, 11.2 | Determination of procedure background and instrument background | Minimize background effects. |

*10.0 Calibration and Standardization*

10.1 Standardization of Alpha Spectrometry System.

10.1.1 Add a quantity of the actinide standard solution to a 100 ml volumetric flask so that the final concentration when diluted to a volume of 100 ml will be approximately $1_p$ Ci/ml.

10.1.2 Add 10 ml of 16 M $HNO_3$ and dilute to 100 ml with water.

10.1.3 Add 20 ml of 1 M HCl to each of six 150 ml beakers. Add 1.0 ml of lanthanum carrier, 0.1 mg lanthanum per ml, to the acid solution in each beaker.

10.1.4 Add 1.0 ml of the 1 pCi/ml working solution (from Section 10.1.1) to each beaker. Add 5.0 ml of 3 M HF to each beaker.

10.1.5 Cover beakers and allow solutions to stand for a minimum of 30 minutes. Filter the contents of each beaker through a separate filter membrane using the suction filter apparatus. After each filtration, wash the filter membrane with 10 ml of distilled water and 5 ml of ethanol, and allow the filter membrane to air dry on the filter apparatus.

10.1.6 Carefully remove the filter membrane and mount it, filtration side up, with double-side tape on the inner surface of a planchet. Place planchet in an alpha spectrometry system and count each planchet for 1000 minutes.

10.1.7 Calculate the counting efficiency of the detector for each aliquot of the 1 pCi/ml actinide working solution using Eq. 111-1 in Section 12.2.

10.1.8 Determine the average counting efficiency of the detector, $E_c$ , by calculating the average of the six determinations.

10.2 Preparation of Standardized Solution of Polonium-209.

10.2.1 Add a quantity of the Po-209 solution to a 100 ml volumetric flask so that the final concentration when diluted to a 100 ml volume will be approximately 1 pCi/ml.

10.2.2 Follow the procedures outlined in Sections 10.1.2 through 10.1.6, except substitute 1.0 ml of polonium-209 tracer solution (Section 10.2.1) and 3.0 ml of 15 M ammonium hydroxide for the 1 pCi/ml actinide working solution and the 3 M HF, respectively.

10.2.3 Calculate the activity of each aliquot of the polonium-209 tracer solution using Eq. 111-2 in Section 12.3.

10.2.4 Determine the average activity of the polonium-209 tracer solution, F, by averaging the results of the six determinations.

10.3 Standardization of Internal Proportional Counter

10.3.1 Add a quantity of the actinide standard solution to a 100 ml volumetric flask so that the final concentration when diluted to a 100 ml volume will be approximately 100 pCi/ml.

10.3.2 Follow the procedures outlined in Sections 10.1.2 through 10.1.6, except substitute the 100 pCi/ml actinide working solution for the 1 pCi/ml solution, place the planchet in an internal proportional counter (instead of an alpha spectrometry system), and count for 100 minutes (instead of 1000 minutes).

10.3.3 Calculate the counting efficiency of the internal proportional counter for each aliquot of the 100 pCi/ml actinide working solution using Eq. 111-3 in 12.4.

10.3.4 Determine the average counting efficiency of the internal proportional counter, $E_I$ , by averaging the results of the six determinations.

## *11.0 Analytical Procedure*

NOTE: Perform duplicate analyses of all samples, including background counts and Method 5 samples. Duplicate measurements are considered acceptable when the difference between them is less than two standard deviations as described in EPA 600/4-77-001 or subsequent revisions.

11.1 Determination of Procedure Background. Background counts used in all equations are determined by performing the specific analysis required using the analytical reagents only. All procedure background counts and sample counts for the internal proportional counter should utilize a counting time of 100 minutes; for the alpha spectrometry system, 1000 minutes. These background counts should be performed no less frequently than once per 10 sample analyses.

11.2 Determination of Instrument Background. Instrument backgrounds of the internal proportional counter and the alpha spectrometry system should be determined on a weekly basis. Instrument background should not exceed procedure background. If this occurs, it may be due to a malfunction or contamination, and should be corrected before use.

11.4 Sample Preparation. Treat the Method 5 samples [ *i.e.,* the glass fiber filter (Container No. 1) and the acetone rinse (Container No. 2)] as follows:

11.4.1 Container No. 1. Transfer the filter and any loose particulate matter from the sample container to a 150-ml Teflon beaker.

11.4.2 Container No. 2. Note the level of liquid in the container, and confirm on the analysis sheet whether leakage occurred during transport. If a noticeable amount of leakage has occurred, either void the sample or use methods, subject to the approval of the Administrator, to correct the final results. Transfer the contents to a 400-ml glass beaker. Add polonium-209 tracer solution to the glass beaker in an amount approximately equal to the amount of polonium-210 expected in the total particulate sample. Record the activity of the tracer solution added. Add 16 M nitric acid to the beaker to digest and loosen the residue.

11.4.3 Transfer the contents of the glass beaker to the Teflon beaker containing the glass fiber filter. Rinse the glass beaker with 16 M $HNO_3$ . If necessary, reduce the volume in the beaker by evaporation until all of the nitric acid $HNO_3$ from the glass beaker has been transferred to the Teflon beaker.

11.4.4 Add 30 ml of 29 M HF to the Teflon beaker and evaporate to near dryness on a hot plate in a properly operating hood.

NOTE: Do not allow the residue to go to dryness and overheat; this will result in loss of polonium.

11.4.5 Repeat step 11.4.4 until the filter is dissolved.

11.4.6 Add 100 ml of 16 M $HNO_3$ to the residue in the Teflon beaker and evaporate to near dryness.

NOTE: Do not allow the residue to go to dryness.

11.4.7 Add 50 ml of 16 M $HNO_3$ and 10 ml of 12 M perchloric acid to the Teflon beaker and heat until dense fumes of perchloric acid are evolved.

11.4.8 Repeat steps 11.4.4 to 11.4.7 as necessary until sample is completely dissolved.

11.4.9 Add 10 ml of 12 M HCl to the Teflon beaker and evaporate to dryness. Repeat additions and evaporations several times.

11.4.10 Transfer the sample to a 250-ml volumetric flask and dilute to volume with 3 M HCl.

11.5 Sample Screening. To avoid contamination of the alpha spectrometry system, check each sample as follows:

11.5.1 Add 20 ml of 1 M HCl, 1 ml of the lanthanum carrier solution (0.1 mg La/ml), a 1 ml aliquot of the sample solution from Section 11.4.10, and 3 ml of 15 M ammonium hydroxide to a 250-ml beaker in the order listed. Allow this solution to stand for a minimum of 30 minutes.

11.5.2 Filter the solution through a filter membrane using the suction filter apparatus. Wash the filter membrane with 10 ml of water and 5 ml of ethanol, and allow the filter membrane to air dry on the filter apparatus.

11.5.3 Carefully remove the filter membrane and mount it, filtration side up, with double-side tape on the inner surface of a planchet. Place the planchet in an internal proportional counter, and count for 100 minutes.

11.5.4 Calculate the activity of the sample using Eq. 111-4 in Section 12.5.

11.5.5 Determine the aliquot volume of the sample solution from Section 11.4.10 to be analyzed for polonium-210, such that the aliquot contains an activity between 1 and 4 picocuries. Use Eq. 111-5 in Section 12.6.

11.6 Preparation of Silver Disc for Spontaneous Electrodeposition.

11.6.1 Clean both sides of the polished silver disc with silver cleaner and with degreaser.

11.6.2 Place disc on absorbent paper and spray one side with epoxy spray enamel. This should be carried out in a well-ventilated area, with the disc lying flat to keep paint on one side only. Allow paint to dry for 24 hours before using disc for deposition.

11.7 Sample Analysis.

11.7.1 Add the aliquot of sample solution from Section 11.4.10 to be analyzed for polonium-210, the volume of which was determined in Section 11.5.5, to a suitable 200-ml container to be placed in a constant temperature bath.

NOTE: Aliquot volume may require a larger container.

11.7.2 If necessary, bring the volume to 100 ml with 1 M HCl. If the aliquot volume exceeds 100 ml, use total aliquot.

11.7.3 Add 200 mg of ascorbic acid and heat solution to 85 °C (185 °F) in a constant temperature bath.

11.7.4 Suspend a silver disc in the heated solution using a glass or plastic rod with a hook inserted through the hole in the disc. The disc should be totally immersed in the solution, and the solution must be stirred constantly, at all times during the plating operation. Maintain the disc in solution for 3 hours.

11.7.5 Remove the silver disc, rinse with deionized distilled water, and allow to air dry at room temperature.

11.7.6 Place the disc, with deposition side (unpainted side) up, on a planchet and secure with double-side plastic tape. Place the planchet with disc in alpha spectrometry system and count for 1000 minutes.

*12.0 Data Analysis and Calculations.*

12.1 Nomenclature.

A = Picocuries of polonium-210 in the Method 5 sample (from Section 12.8).

$A_A$ = Picocuries of actinide added.

$A_L$ = Volume of sample aliquot used, in ml (specified in Section 11.5.1 as 1 ml).

$A_S$ = Aliquot to be analyzed, in ml.

$B_B$ = Procedure background counts measured in polonium-209 spectral region.

$B_T$ = Polonium-209 tracer counts in sample.

$C_T$ = Total counts in polonium-210 spectral region.

D = Decay correction for time “t” (in days) from sample collection to sample counting, given by: $D=e^{-0.005t}$

$E_C$ = Average counting efficiency of detector (from Section 10.1.8), as counts per disintegration.

$E_{Ci}$ = Counting efficiency of the detector for aliquot i of the actinide working solution, counts per disintegration.

$E_I$ = Average counting efficiency of the internal proportional counter, as determined in Section 10.3.4, counts per disintegration.

$E_{Ii}$ = Counting efficiency of the internal proportional counter for aliquot i of the 100 pCi/ml actinide working solution, counts per disintegration.

$E_Y$ = The fraction of polonium-209 recovered on the planchet (from Section 12.7).

F= Average activity of polonium-209 in sample (from Section 10.2.4), in pCi.

$F_i$ = activity of aliquot i of the polonium-209 tracer solution, in pCi.

L = Dilution factor (unitless). This is the volume of sample solution prepared (specified as 250 ml in Section 11.1.10) divided by the volume of the aliquot of sample solution analyzed for polonium-210 (from Section 11.7.1).

$M_i$ = Phosphorous rock processing rate of the source being tested, during run i, Mg/hr.

$M_k$ = Phosphate rock processed annually by source k, in Mg/yr.

n = Number of calciners at the elemental phosphorus plant.

P = Total activity of sample solution from Section 11.4.10, in pCi (see Eq. 111-4).

$Q_{sd}$ = Volumetric flow rate of effluent stream, as determined by Method 2, in dscm/hr.

S = Annual polonium-210 emissions from the entire facility, in curies/yr.

$V_{m(std)}$ = Volume of air sample, as determined by Method 5, in dscm.

$X_k$ = Emission rate from source k, from Section 12.10, in curies/Mg.

$10^{-12}$ = Curies per picocurie.

2.22 = Disintegrations per minute per picocurie.

250 = Volume of solution from Section 11.4.10, in ml.

12.2 Counting Efficiency. Calculate the counting efficiency of the detector for each aliquot of the 1 pCi/ml actinide working solution using Eq. 111-1.

$$E_{Ci} = \frac{C_S - C_B}{2.22\, A_A T} \qquad Eq.\ 111\text{-}1$$

Where:

$C_B$ = Background counts in same peak area as $C_S$ .

$C_S$ = Gross counts in actinide peak.

T = Counting time in minutes, specified in Section 10.1.6 as 1000 minutes.

12.3 Polonium-209 Tracer Solution Activity. Calculate the activity of each aliquot of the polonium-209 tracer solution using Eq. 111-2.

$$F_i = \frac{C_S - C_B}{2.22\, E_{Ci} T} \qquad Eq.\ 111\text{-}2$$

Where:

$C_B$ = Background counts in the 4.88 MeV region of spectrum the in the counting time T.

$C_S$ = Gross counts of polonium-209 in the 4.88 MeV region of the spectrum in the counting time T.

T = Counting time, specified in Section 10.1.6 as 1000 minutes.

12.4 Control Efficiency of Internal Proportional Counter. Calculate the counting efficiency of the internal proportional counter for each aliquot of the 100 pCi/ml actinide working solution using Eq. 111-3.

$$E_{Ii} = \frac{C_S - C_B}{2.22\ \mathrm{A}_A T} \qquad Eq.\ 111\text{-}3$$

Where:

$C_B$ = Gross counts of procedure background.

$C_S$ = Gross counts of standard.

T = Counting time in minutes, specified in Section 10.3.2 as 100 minutes.

12.5 Calculate the activity of the sample using Eq. 111-4.

$$P = \frac{250\ \left(C_S - C_B\right)}{2.22\ \overline{\mathrm{E}_\mathrm{I}} A_I T} \qquad Eq.\ 111\text{-}4$$

Where:

$C_B$ = Total counts of procedure background. (See Section 11.1).

$C_S$ = Total counts of screening sample.

T = Counting time for sample and background (which must be equal), in minutes (specified in Section 11.5.3 as 100 minutes).

12.6 Aliquot Volume. Determine the aliquot volume of the sample solution from Section 11.4.10 to be analyzed for polonium-210 , such that the aliquot contains an activity between 1 and 4 picocuries using Eq. 111-5.

$$A_s = \frac{250\ (\text{desired picocuries in aliquot})}{\mathrm{P}} \qquad Eq.\ 111\text{-}5$$

12.7 Polonium-209 Recovery. Calculate the fraction of polonium-209 recovered on the planchet, $E_Y$ , using Eq. 111-6.

$$E_Y = \frac{B_T - B_B}{2.22\ \overline{\mathrm{F}}\ \overline{E_C}\ T} \qquad Eq.\ 111\text{-}6$$

Where:

T = Counting time, specified in Section 11.1 as 1000 minutes.

12.8 Polonium-210 Activity. Calculate the activity of polonium-210 in the Method 5 sample (including glass fiber filter and acetone rinse) using Eq. 111-7.

$$A = \frac{\left(C_T - C_B\right)\ \mathrm{L}}{2.22\ \mathrm{E}_\mathrm{y}\ \overline{E_C}\ T\ D} \qquad Eq.\ 111\text{-}7$$

Where:

$C_B$ = Procedure background counts in polonium-210 spectral region.

T = Counting time, specified in Section 11.1 as 1000 minutes for all alpha spectrometry sample and background counts.

12.9 Emission Rate from Each Stack.

12.9.1 For each test run, i, on a stack, calculate the measured polonium-210 emission rate, $R_{Si}$ , using Eq. 111-8.

$$R_{Si} = \frac{\left(10^{-12}\right) A Q_{sd}}{V_{m(std)} M_i} \qquad Eq.\ 111\text{-}8$$

12.9.2 Determine the average polonium-210 emission rate from the stack, $R_S$ , by taking the sum of the measured emission rates for all runs, and dividing by the number of runs performed.

12.9.3 Repeat steps 12.9.1 and 12.9.2 for each stack of each calciner.

12.10 Emission Rate from Each Source. Determine the total polonium-210 emission rate, $X_k$ , from each source, k, by taking the sum of the average emission rates from all stacks to which the source exhausts.

12.11 Annual Polonium-210 Emission Rate from Entire Facility. Determine the annual elemental phosphorus plant emissions of polonium-210, S, using Eq. 111-9.

$$S = \frac{\sum_{k=1}^{n} \left( X_k M_k \right)}{n} \qquad Eq.\ 111\text{-}9$$

*13.0 Method Performance. [Reserved]*

*14.0 Pollution Prevention. [Reserved]*

*15.0 Waste Management. [Reserved]*

*16.0 References*

1. Blanchard, R.L. “Rapid Determination of Lead-210 and Polonium-210 in Environmental Samples by Deposition on Nickel.” Anal. Chem., *38* :189, pp. 189-192. February 1966.

*17.0 Tables, Diagrams, Flowcharts, and Validation Data [Reserved]*

Method 114—Test Methods for Measuring Radionuclide Emissions from Stationary Sources

*1. Purpose and Background*

This method provides the requirements for: (1) Stack monitoring and sample collection methods appropriate for radionuclides; (2) radiochemical methods which are used in determining the amounts of radionuclides collected by the stack sampling and; (3) quality assurance methods which are conducted in conjunction with these measurements. These methods are appropriate for emissions for stationary sources. A list of references is provided.

Many different types of facilities release radionuclides into air. These radionuclides differ in the chemical and physical forms, half-lives and type of radiation emitted. The appropriate combination of sample extraction, collection and analysis for an individual radionuclide is dependent upon many interrelated factors including the mixture of other radionuclides present. Because of this wide range of conditions, no single method for monitoring or sample collection and analysis of a radionuclide is applicable to all types of facilities. Therefore, a series of methods based on "principles of measurement" are described for monitoring and sample collection and analysis which are applicable to the measurement of radionuclides found in effluent streams at stationary sources. This approach provides the user with the flexibility to choose the most appropriate combination of monitoring and sample collection and analysis methods which are applicable to the effluent stream to be measured.

*2. Stack Monitoring and Sample Collection Methods*

Monitoring and sample collection methods are described based on "principles of monitoring and sample collection" which are applicable to the measurement of radionuclides from effluent streams at stationary sources. Radionuclides of most elements will be in the particulate form in these effluent streams and can be readily collected using a suitable filter media. Radionuclides of hydrogen, oxygen, carbon, nitrogen, the noble gases and in some circumstances iodine will be in the gaseous form. Radionuclides of these elements will require either the use of an in-line or off-line monitor to directly measure the radionuclides, or suitable sorbers, condensers or bubblers to collect the radionuclides.

2.1 Radionuclides as Particulates. The extracted effluent stream is passed through a filter media to remove the particulates. The filter must have a high efficiency for removal of sub-micron particles. The guidance in ANSI/HPS N13.1-1999 (section 6.6.2 Filter media) shall be followed in using filter media to collect particulates (incorporated by reference—see § 61.18 of this part).

2.2 Radionuclides as Gases.

2.2.1 The Radionuclide Tritium (H-3). Tritium in the form of water vapor is collected from the extracted effluent sample by sorption, condensation or dissolution techniques. Appropriate collectors may include silica gel, molecular sieves, and ethylene glycol or water bubblers.

Tritium in the gaseous form may be measured directly in the sample stream using Method B-1, collected as a gas sample or may be oxidized using a metal catalyst to tritiated water and collected as described above.

2.2.2 Radionuclides of Iodine. Iodine is collected from an extracted sample by sorption or dissolution techniques. Appropriate collectors may include charcoal, impregnated charcoal, metal zeolite and caustic solutions.

2.2.3 Radionuclides of Argon, Krypton and Xenon. Radionuclides of these elements are either measured directly by an in-line or off-line monitor, or are collected from the extracted sample by low temperature sorption techniques, Appropriate sorbers may include charcoal or metal zeolite.

2.2.4 Radionuclides of Oxygen, Carbon, Nitrogen and Radon. Radionuclides of these elements are measured directly using an in-line or off-line monitor. Radionuclides of carbon in the form of carbon dioxide may be collected by dissolution in caustic solutions.

2.3 Definition of Terms

*In-line monitor* means a continuous measurement system in which the detector is placed directly in or adjacent to the effluent stream. This may involve either gross radioactivity measurements or specific radionuclide measurements. Gross measurements shall be made in conformance with the conditions specified in Methods A-4, B-2 and G-4.

*Off-line monitor* means a measurement system in which the detector is used to continuously measure an extracted sample of the effluent stream. This may involve either gross radioactivity measurements or specific radionuclide measurements. Gross measurements shall be made in conformance with the conditions specified in Methods A-4, B-2 and G-4.

*Sample collection* means a procedure in which the radionuclides are removed from an extracted sample of the effluent using a collection media. These collection media include filters, absorbers, bubblers and condensers. The collected sample is analyzed using the methods described in Section 3.

*3. Radionuclide Analysis Methods*

A series of methods based on “principles of measurement” are described which are applicable to the analysis of radionuclides collected from airborne effluent streams at stationary sources. These methods are applicable only under the conditions stated and within the limitations described. Some methods specify that only a single radionuclide be present in the sample or the chemically separated sample. This condition should be interpreted to mean that no other radionuclides are present in quantities which would interfere with the measurement.

Also identified (Table 1) are methods for a selected list of radionuclides. The listed radionuclides are those which are most commonly used and which have the greatest potential for causing dose to members of the public. Use of methods based on principles of measurement other than those described in this section must be approved in advance of use by the Administrator. For radionuclides not listed in Table 1, any of the described methods may be used provided the user can demonstrate that the applicability conditions of the method have been met.

The type of method applicable to the analysis of a radionuclide is dependent upon the type of radiation emitted, i.e., alpha, beta or gamma. Therefore, the methods described below are grouped according to principles of measurements for the analysis of alpha, beta and gamma emitting radionuclides.

3.1 Methods for Alpha Emitting Radionuclides

3.1.1 Method A-1, Radiochemistry-Alpha Spectrometry.

*Principle:* The element of interest is separated from other elements, and from the sample matrix using radiochemical techniques. The procedure may involve precipitation, ion exchange, or solvent extraction. Carriers (elements chemically similar to the element of interest) may be used. The element is deposited on a planchet in a very thin film by electrodeposition or by coprecipitation on a very small amount of carrier, such as lanthanum fluoride. The deposited element is then counted with an alpha spectrometer. The activity of the nuclide of interest is measured by the number of alpha counts in the appropriate energy region. A correction for chemical yield and counting efficiency is made using a standardized radioactive nuclide (tracer) of the same element. If a radioactive tracer is not available for the element of interest, a predetermined chemical yield factor may be used.

*Applicability:* This method is applicable for determining the activity of any alpha-emitting radionuclide, regardless of what other radionuclides are present in the sample provided the chemical separation step produces a very thin sample and removes all other radionuclides which could interfere in the spectral region of interest. APHA-605(2), ASTM-D-3972(13).

3.1.2 Method A-2, Radiochemistry-Alpha Counting.

*Principle:* The element of interest is separated from other elements, and from the sample matrix using radiochemistry. The procedure may involve precipitation, ion exchange, or solvent extraction. Carriers (elements chemically similar to the element of interest) may be used. The element is deposited on a planchet in a thin film and counted with an alpha counter. A correction for chemical yield (if necessary) is made. The alpha count rate measures the total activity of all emitting radionuclides of the separated element.

*Applicability:* This method is applicable for the measurement of any alpha-emitting radionuclide, provided no other alpha emitting radionuclide is present in the separated sample. It may also be applicable for determining compliance, when other radionuclides of the separated element are present, provided that the calculated emission rate is assigned to the radionuclide which could be present in the sample that has the highest dose conversion factor. IDO-12096(18).

3.1.3 Method A-3, Direct Alpha Spectrometry.

*Principle:* The sample, collected on a suitable filter, is counted directly on an alpha spectrometer. The sample must be thin enough and collected on the surface of the filter so that any absorption of alpha particle energy in the sample or the filter, which would degrade the spectrum, is minimal.

*Applicability:* This method is applicable to simple mixtures of alpha emitting radionuclides and only when the amount of particulates collected on the filter paper are relatively small and the alpha spectra is adequately resolved. Resolutions should be 50 keV (FWHM) or better, ASTM-D-3084(16).

3.1.4 Method A-4, Direct Alpha Counting (Gross alpha determination).

*Principle:* The sample, collected on a suitable filter, is counted with an alpha counter. The sample must be thin enough so that self-absorption is not significant and the filter must be of such a nature that the particles are retained on the surface.

*Applicability:* Gross alpha determinations may be used to measure emissions of specific radionuclides only (1) when it is known that the sample contains only a single radionuclide, or the identity and isotopic ratio of the radionuclides in the sample are well-known, and (2) measurements using either Method A-1, A-2 or A-5 have shown that this method provides a reasonably accurate measurement of the emission rate. Gross alpha measurements are applicable to unidentified mixtures of radionuclides only for the purposes and under the conditions described in section 3.7. APHA-601(3), ASTM-D-1943(10).

3.1.5 Method A-5, Chemical Determination of Uranium.

*Principle:* Uranium may be measured chemically by either colorimetry or fluorometry. In both procedures, the sample is dissolved, the uranium is oxidized to the hexavalent form and extracted into a suitable solvent. Impurities are removed from the solvent layer. For colorimetry, dibenzoylmethane is added, and the uranium is measured by the absorbance in a colorimeter. For fluorometry, a portion of the solution is fused with a sodium fluoride-lithium fluoride flux and the uranium is determined by the ultraviolet activated fluorescence of the fused disk in a fluorometer.

*Applicability:* This method is applicable to the measurements of emission rates of uranium when the isotopic ratio of the uranium radionuclides is well known. ASTM-E-318(15), ASTM-D-2907(14).

3.1.6 Method A-6, Radon-222—Continuous Gas Monitor.

*Principle:* Radon-222 is measured directly in a continuously extracted sample stream by passing the air stream through a calibrated scintillation cell. Prior to the scintillation cell, the air stream is treated to remove particulates and excess moisture. The alpha particles from radon-222 and its decay products strike a zinc sulfide coating on the inside of the scintillation cell producing light pulses. The light pulses are detected by a photomultiplier tube which generates electrical pulses. These pulses are processed by the system electronics and the read out is in pCi/l of radon-222.

*Applicability:* This method is applicable to the measurement of radon-222 in effluent streams which do not contain significant quantities of radon-220. Users of this method should calibrate the monitor in a radon calibration chamber at least twice per year. The background of the monitor should also be checked periodically by operating the instrument in a low radon environment. EPA 520/1-89-009(24).

3.1.7 Method A-7, Radon-222-Alpha Track Detectors

*Principle:* Radon-222 is measured directly in the effluent stream using alpha track detectors (ATD). The alpha particles emitted by radon-222 and its decay products strike a small plastic strip and produce submicron damage tracks. The plastic strip is placed in a caustic solution that accentuates the damage tracks which are counted using a microscope or automatic counting system. The number of tracks per unit area is correlated to the radon concentration in air using a conversion factor derived from data generated in a radon calibration facility.

*Applicability:* Prior approval from EPA is required for use of this method. This method is only applicable to effluent streams which do not contain significant quantities of radon-220, unless special detectors are used to discriminate against radon-220. This method may be used only when ATDs have been demonstrated to produce data comparable to data obtained with Method A-6. Such data should be submitted to EPA when requesting approval for the use of this method. EPA 520/1-89-009(24).

3.2 Methods for Gaseous Beta Emitting Radionuclides.

3.2.1 Method B-1, Direct Counting in Flow-Through Ionization Chambers.

*Principle:* An ionization chamber containing a specific volume of gas which flows at a given flow rate through the chamber is used. The sample (effluent stream sample) acts as the counting gas for the chamber. The activity of the radionuclide is determined from the current measured in the ionization chamber.

*Applicability:* This method is applicable for measuring the activity of a gaseous beta-emitting radionuclide in an effluent stream that is suitable as a counting gas, when no other beta-emitting nuclides are present. DOE/EP-0096(17), NCRP-58(23).

3.2.2 Method B-2, Direct Counting With In-line or Off-line Beta Detectors.

*Principle:* The beta detector is placed directly in the effluent stream (in-line) or an extracted sample of the effluent stream is passed through a chamber containing a beta detector (off-line). The activities of the radionuclides present in the effluent stream are determined from the beta count rate, and a knowledge of the radionuclides present and the relationship of the gross beta count rate and the specific radionuclide concentration.

*Applicability:* This method is applicable only to radionuclides with maximum beta particle energies greater then 0.2 MeV. This method may be used to measure emissions of specific radionuclides only when it is known that the sample contains only a single radionuclide or the identity and isotopic ratio of the radionuclides in the effluent stream are well known. Specific radionuclide analysis of periodic grab samples may be used to identify the types and quantities of radionuclides present and to establish the relationship between specific radionuclide analyses and gross beta count rates.

This method is applicable to unidentified mixtures of gaseous radionuclides only for the purposes and under the conditions described in section 3.7.

3.3 Methods for Non-Gaseous Beta Emitting Radionuclides.

3.3.1 Method B-3, Radiochemistry-Beta Counting.

*Principle:* The element of interest is separated from other elements, and from the sample matrix by radiochemistry. This may involve precipitation, distillation, ion exchange, or solvent extraction. Carriers (elements chemically similar to the element of interest) may be used. The element is deposited on a planchet, and counted with a beta counter. Corrections for chemical yield, and decay (if necessary) are made. The beta count rate determines the total activity of all radionuclides of the separated element. This method may also involve the radiochemical separation and counting of a daughter element, after a suitable period of ingrowth, in which case it is specific for the parent nuclide.

*Applicability:* This method is applicable for measuring the activity of any beta-emitting radionuclide, with a maximum energy greater than 0.2 MeV, provided no other radionuclide is present in the separated sample. APHA-608(5).

3.3.2 Method B-4, Direct Beta Counting (Gross beta determination).

*Principle:* The sample, collected on a suitable filter, is counted with a beta counter. The sample must be thin enough so that self-absorption corrections can be made.

*Applicability:* Gross beta measurements are applicable only to radionuclides with maximum beta particle energies greater than 0.2 MeV. Gross beta measurements may be used to measure emissions of specific radionuclides only (1) when it is known that the sample contains only a single radionuclide, and (2) measurements made using Method B-3 show reasonable agreement with the gross beta measurement. Gross beta measurements are applicable to mixtures of radionuclides only for the purposes and under the conditions described in section 3.7. APHA-602(4), ASTM-D-1890(11).

3.3.3 Method B-5, Liquid Scintillation Spectrometry.

*Principle:* An aliquot of a collected sample or the result of some other chemical separation or processing technique is added to a liquid scintillation “cocktail” which is viewed by photomultiplier tubes in a liquid scintillation spectrometer.

The spectrometer is adjusted to establish a channel or “window” for the pulse energy appropriate to the nuclide of interest. The activity of the nuclide of interest is measured by the counting rate in the appropriate energy channel. Corrections are made for chemical yield where separations are made.

*Applicability:* This method is applicable to any beta-emitting nuclide when no other radionuclide is present in the sample or the separated sample provided that it can be incorporated in the scintillation cocktail. This method is also applicable for samples which contain more than one radionuclide but only when the energies of the beta particles are sufficiently separated so that they can be resolved by the spectrometer. This method is most applicable to the measurement of low-energy beta emitters such as tritium and carbon-14. APHA-609(6), EML-LV-539-17(19).

3.4 Gamma Emitting Radionuclides

3.4.1 Method G-1, High Resolution Gamma Spectrometry.

*Principle:* The sample is counted with a high resolution gamma detector, usually either a Ge(Li) or a high purity Ge detector, connected to a multichannel analyzer or computer. The gamma emitting radionuclides in the sample are measured from the gamma count rates in the energy regions characteristic of the individual radionuclide. Corrections are made for counts contributed by other radionuclides to the spectral regions of the radionuclides of interest. Radiochemical separations may be made prior to counting but are usually not necessary.

*Applicability:* This method is applicable to the measurement of any gamma emitting radionuclide with gamma energies greater than 20 keV. It can be applied to complex mixtures of radionuclides. The samples counted may be in the form of particulate filters, absorbers, liquids or gases. The method may also be applied to the analysis of gaseous gamma emitting radionuclides directly in an effluent stream by passing the stream through a chamber or cell containing the detector. ASTM-3649(9), IDO-12096(18).

3.4.2 Method G-2, Low Resolution Gamma Spectrometry.

*Principle:* The sample is counted with a low resolution gamma detector, a thallium activated sodium iodide crystal. The detector is coupled to a photomultiplier tube and connected to a multichannel analyzer. The gamma emitting radionuclides in the sample are measured from the gamma count rates in the energy regions characteristic of the individual radionuclides. Corrections are made for counts contributed by other radionuclides to the spectral regions of the radionuclides of interest. Radiochemical separation may be used prior to counting to obtain less complex gamma spectra if needed.

*Applicability:* This method is applicable to the measurement of gamma emitting radionuclides with energies greater than 100 keV. It can be applied only to relatively simple mixtures of gamma emitting radionuclides. The samples counted may be in the form of particulate filters, absorbers, liquids or gas. The method can be applied to the analysis of gaseous radionuclides directly in an effluent stream by passing the gas stream through a chamber or cell containing the detector. ASTM-D-2459(12), EMSL-LV-0539-17(19).

3.4.3 Method G-3, Single Channel Gamma Spectrometry.

*Principle:* The sample is counted with a thallium activated sodium iodide crystal. The detector is coupled to a photomultiplier tube connected to a single channel analyzer. The activity of a gamma emitting radionuclide is determined from the gamma counts in the energy range for which the counter is set.

*Applicability:* This method is applicable to the measurement of a single gamma emitting radionuclide. It is not applicable to mixtures of radionuclides. The samples counted may be in the form of particulate filters, absorbers, liquids or gas. The method can be applied to the analysis of gaseous radionuclides directly in an effluent stream by passing the gas stream through a chamber or cell containing the detector.

3.4.4 Method G-4, Gross Gamma Counting.

*Principle:* The sample is counted with a gamma detector usually a thallium activated sodium iodine crystal. The detector is coupled to a photomultiplier tube and gamma rays above a specific threshold energy level are counted.

*Applicability:* Gross gamma measurements may be used to measure emissions of specific radionuclides only when it is known that the sample contains a single radionuclide or the identity and isotopic ratio of the radionuclides in the effluent stream are well known. When gross gamma measurements are used to determine emissions of specific radionuclides periodic measurements using Methods G-1 or G-2 should be made to demonstrate that the gross gamma measurements provide reliable emission data. This method may be applied to analysis of gaseous radionuclides directly in an effluent stream by placing the detector directly in or adjacent to the effluent stream or passing an extracted sample of the effluent stream through a chamber or cell containing the detector.

3.5 Counting Methods. All of the above methods with the exception of Method A-5 involve counting the radiation emitted by the radionuclide. Counting methods applicable to the measurement of alpha, beta and gamma radiations are listed below. The equipment needed and the counting principles involved are described in detail in ASTM-3648(8).

3.5.1 Alpha Counting:

• *Gas Flow Proportional Counters.* The alpha particles cause ionization in the counting gas and the resulting electrical pulses are counted. These counters may be windowless or have very thin windows.

• *Scintillation Counters.* The alpha particles transfer energy to a scintillator resulting in a production of light photons which strike a photomultiplier tube converting the light photons to electrical pulses which are counted. The counters may involve the use of solid scintillation materials such as zinc sulfide or liquid scintillation solutions.

• *Solid-State Counters.* Semiconductor materials, such as silicon surface-barrier p-n junctions, act as solid ionization chambers. The alpha particles interact which the detector producing electron hole pairs. The charged pair is collected by an applied electrical field and the resulting electrical pulses are counted.

• *Alpha Spectrometers.* Semiconductor detectors used in conjunction with multichannel analyzers for energy discrimination.

3.5.2 Beta Counting:

• *Ionization Chambers.* These chambers contain the beta-emitting nuclide in gaseous form. The ionization current produced is measured.

• *Geiger-Muller (GM) Counters-or Gas Flow Proportional Counters.* The beta particles cause ionization in the counting gas and the resulting electrical pulses are counted. Proportional gas flow counters which are heavily shielded by lead or other metal, and provided with an anti-coincidence shield to reject cosmic rays, are called low background beta counters.

• *Scintillation Counters.* The beta particles transfer energy to a scintillator resulting in a production of light photons, which strike a photomultiplier tube converting the light photon to electrical pulses which are counted. This may involve the use of anthracene crystals, plastic scintillator, or liquid scintillation solutions with organic phosphors.

• *Liquid Scintillation Spectrometers.* Liquid scintillation counters which use two photomultiplier tubes in coincidence to reduce background counts. This counter may also electronically discriminate among pulses of a given range of energy.

3.5.3 Gamma Counting:

• *Low-Resolution Gamma Spectrometers.* The gamma rays interact with thallium activated sodium iodide or cesium iodide crystal resulting in the release of light photons which strike a photomultiplier tube converting the light pulses to electrical pulses proportional to the energy of the gamma ray. Multi-channel analyzers are used to separate and store the pulses according to the energy absorbed in the crystal.

• *High-Resolution gamma Spectrometers.* Gamma rays interact with a lithium-drifted (Ge(Li)) or high-purity germanium (HPGe) semiconductor detectors resulting in a production of electron-hole pairs. The charged pair is collected by an applied electrical field. A very stable low noise preamplifier amplifies the pulses of electrical charge

resulting from the gamma photon interactions. Multichannel analyzers or computers are used to separate and store the pulses according to the energy absorbed in the crystal.

• *Single Channel Analyzers.* Thallium activated sodium iodide crystals used with a single window analyzer. Pulses from the photomultiplier tubes are separated in a single predetermined energy range.

3.5.4 Calibration of Counters. Counters are calibrated for specific radionuclide measurements using a standard of the radionuclide under either identical or very similar conditions as the sample to be counted. For gamma spectrometers a series of standards covering the energy range of interest may be used to construct a calibration curve relating gamma energy to counting efficiency.

In those cases where a standard is not available for a radionuclide, counters may be calibrated using a standard with energy characteristics as similar as possible to the radionuclide to be measured. For gross alpha and beta measurements of the unidentified mixtures of radionuclides, alpha counters are calibrated with a natural uranium standard and beta counters with a cesium-137 standard. The standard must contain the same weight and distribution of solids as the samples, and be mounted in an identical manner. If the samples contain variable amounts of solids, calibration curves relating weight of solids present to counting efficiency are prepared. Standards other than those prescribed may be used provided it can be shown that such standards are more applicable to the radionuclide mixture measured.

3.6 Radiochemical Methods for Selected Radionuclides. Methods for a selected list of radionuclides are listed in Table 1. The radionuclides listed are those which are most commonly used and which have the greatest potential for causing doses to members of the public. For radionuclides not listed in Table 1, methods based on any of the applicable “principles of measurement” described in section 3.1 through 3.4 may be used.

3.7 Applicability of Gross Alpha and Beta Measurements to Unidentified Mixtures of Radionuclides. Gross alpha and beta measurements may be used as a screening measurement as a part of an emission measurement program to identify the need to do specific radionuclide analyses or to confirm or verify that unexpected radionuclides are not being released in significant quantities.

Gross alpha (Method A-4) or gross beta (Methods B-2 or B-4) measurements may also be used for the purpose of comparing the measured concentrations in the effluent stream with the limiting “Concentration Levels for Environmental Compliance” in table 2 of appendix E. For unidentified mixtures, the measured concentration value shall be compared with the lowest environmental concentration limit for any radionuclide which is not known to be absent from the effluent stream.

Table 1—List of Approved Methods for Specific Radionuclides

| **Radionuclide** | **Approved methods of analysis** |
|---|---|
| Am-241 | A-1, A-2, A-3, A-4 |
| Ar-41 | B-1, B-2, G-1, G-2, G-3, G-4 |
| Ba-140 | G-1, G-2, G-3, G-4 |
| Br-82 | G-1, G-2, G-3, G-4 |
| C-11 | B-1, B-2, G-1, G-2, G-3, G-4 |
| C-14 | B-5 |
| Ca-45 | B-3, B-4, B-5 |
| Ce-144 | G-1, G-2, G-3, G-4 |
| Cm-244 | A-1, A-2, A-3, A-4 |
| Co-60 | G-1, G-2, G-3, G-4 |
| Cr-51 | G-1, G-2, G-3, G-4 |
| Cs-134 | G-1, G-2, G-3, G-4 |
| Cs-137 | G-1, G-2, G-3, G-4 |
| Fe-55 | B-5, G-1 |

| Radionuclide | Approved methods of analysis |
|---|---|
| Fe-59 | G-1, G-2, G-3, G-4 |
| Ga-67 | G-1, G-2, G-3, G-4 |
| H-3 ($H_2O$) | B-5 |
| H-3 (gas) | B-1 |
| I-123 | G-1, G-2, G-3, G-4 |
| I-125 | G-1 |
| I-131 | G-1, G-2, G-3, G-4 |
| In-113m | G-1, G-2, G-3, G-4 |
| Ir-192 | G-1, G-2, G-3, G-4 |
| Kr-85 | B-1, B-2, B-5, G-1, G-2, G-3, G-4 |
| Kr-87 | B-1, B-2, G-1, G-2, G-3, G-4 |
| Kr-88 | B-1, B-2, G-1, G-2, G-3, G-4 |
| Mn-54 | G-1, G-2, G-3, G-4 |
| Mo-99 | G-1, G-2, G-3, G-4 |
| N-13 | B-1, B-2, G-1, G-2, G-3, G-4 |
| O-15 | B-1, B-2, G-1, G-2, G-3, G-4 |
| P-32 | B-3, B-4, B-5 |
| Pm-147 | B-3, B-4, B-5 |
| Po-210 | A-1, A-2, A-3, A-4 |
| Pu-238 | A-1, A-2, A-3, A-4 |
| Pu-239 | A-1, A-2, A-3, A-4 |
| Pu-240 | A-1, A-2, A-3, A-4 |
| Ra-226 | A-1, A-2, G-1, G-2 |
| S-35 | B-5 |
| Se-75 | G-1, G-2, G-3, G-4 |
| Sr-90 | B-3, B-4, B-5 |
| Tc-99 | B-3, B-4, B-5 |
| Te-201 | G-1, G-2, G-3, G-4 |
| Uranium (total alpha) | A-1, A-2, A-3, A-4 |
| Uranium (Isotopic) | A-1, A-3 |
| Uranium (Natural) | A-5 |
| Xe-133 | G-1 |
| Yb-169 | G-1, G-2, G-3, G-4 |
| Zn-65 | G-1, G-2, G-3, G-4 |

*4. Quality Assurance Methods*

Each facility required to measure their radionuclide emissions shall conduct a quality assurance program in conjunction with the radionuclide emission measurements. This program shall assure that the emission measurements are representative, and are of known precision and accuracy and shall include administrative controls to assure prompt response when emission measurements indicate unexpectedly large emissions. The program shall consist of a system of policies, organizational responsibilities, written procedures, data quality specifications, audits, corrective actions and reports. This quality assurance program shall include the following program elements:

4.1 The organizational structure, functional responsibilities, levels of authority and lines of communications for all activities related to the emissions measurement program shall be identified and documented.

4.2 Administrative controls shall be prescribed to ensure prompt response in the event that emission levels increase due to unplanned operations.

4.3 The sample collection and analysis procedures used in measuring the emissions shall be described including where applicable:

4.3.1 Identification of sampling sites and number of sampling points, including the rationale for site selections.

4.3.2 A description of sampling probes and representativeness of the samples.

4.3.3 A description of any continuous monitoring system used to measure emissions, including the sensitivity of the system, calibration procedures and frequency of calibration.

4.3.4 A description of the sample collection systems for each radionuclide measured, including frequency of collection, calibration procedures and frequency of calibration.

4.3.5 A description of the laboratory analysis procedures used for each radionuclide measured, including frequency of analysis, calibration procedures and frequency of calibration.

4.3.6 A description of the sample flow rate measurement systems or procedures, including calibration procedures and frequency of calibration.

4.3.7 A description of the effluent flow rate measurement procedures, including frequency of measurements, calibration procedures and frequency of calibration.

4.4 The objectives of the quality assurance program shall be documented and shall state the required precision, accuracy and completeness of the emission measurement data including a description of the procedures used to assess these parameters. Accuracy is the degree of agreement of a measurement with a true or known value. Precision is a measure of the agreement among individual measurements of the same parameters under similar conditions. Completeness is a measure of the amount of valid data obtained compared to the amount expected under normal conditions.

4.5 A quality control program shall be established to evaluate and track the quality of the emissions measurement data against preset criteria. The program should include where applicable a system of replicates, spiked samples, split samples, blanks and control charts. The number and frequency of such quality control checks shall be identified.

4.6 A sample tracking system shall be established to provide for positive identification of samples and data through all phases of the sample collection, analysis and reporting system. Sample handling and preservation procedures shall be established to maintain the integrity of samples during collection, storage and analysis.

4.7 Regular maintenance, calibration and field checks shall be performed for each sampling system in use by satisfying the requirements found in Table 2: Maintenance, Calibration and Field Check Requirements.

Table 2—Maintenance, Calibration and Field Check Requirements

| **Sampling system components** | **Frequency of activity** |
|---|---|
| Cleaning of thermal anemometer elements | As required by application. |
| Inspect pitot tubes for contaminant deposits | At least annually. |
| Inspect pitot tube systems for leaks | At least annually. |
| Inspect sharp-edged nozzles for damage | At least annually or after maintenance that could cause damage. |
| Check nozzles for alignment, presence of deposits, or other potentially degrading factors | Annually. |
| Check transport lines of HEPA-filtered applications to determine if cleaning is required | Annually. |

| Sampling system components | Frequency of activity |
|---|---|
| Clean transport lines | Visible deposits for HEPA-filtered applications. Mean mass of deposited material exceeds 1g/$m^2$for other applications. |
| Inspect or test the sample transport system for leaks | At least annually. |
| Check mass flow meters of sampling systems with a secondary or transfer standard | At least quarterly. |
| Inspect rotameters of sampling systems for presence of foreign matter | At the start of each sampling period. |
| Check response of stack flow rate systems | At least quarterly. |
| Calibration of flow meters of sampling systems | At least annually. |
| Calibration of effluent flow measurement devices | At least annually. |
| Calibration of timing devices | At least annually. |

4.8 Periodic internal and external audits shall be performed to monitor compliance with the quality assurance program. These audits shall be performed in accordance with written procedures and conducted by personnel who do not have responsibility for performing any of the operations being audited.

4.9 A corrective action program shall be established including criteria for when corrective action is needed, what corrective actions will be taken and who is responsible for taking the corrective action.

4.10 Periodic reports to responsible management shall be prepared on the performance of the emissions measurements program. These reports should include assessment of the quality of the data, results of audits and description of corrective actions.

4.11 The quality assurance program should be documented in a quality assurance project plan that should address each of the above requirements.

*5. References*

(1) American National Standards Institute “Guide to Sampling Airborne Radioactive Materials in Nuclear Facilities”, ANSI-N13.1-1969, American National Standards Institute, New York, New York (1969).

(2) American Public Health Association, “Methods of Air Sampling”, 2nd Edition, Method 605, “Tentative Method of Analysis for Plutonium Content of Atmospheric Particulate Matter”. American Public Health Association, New York, NY (1977).

(3) Ibid, Method 601, “Tentative Method of Analysis for Gross Alpha Radioactivity Content of the Atmosphere”.

(4) Ibid, Method 602, “Tentative Method of the Analysis for Gross Beta Radioactivity Content of the Atmosphere”.

(5) Ibid, Method 608, “Tentative Method of Analysis for Strontium-90 Content of Atmospheric Particulate Matter”.

(6) Ibid, Method 609, “Tentative Method of Analysis for Tritium Content of the Atmosphere”.

(7) Ibid, Method 603, “Tentative Method of Analysis for Iodine-131 Content of the Atmosphere”.

(8) American Society for Testing and Materials, 1986 Annual Book ASTM Standards, Designation D-3648-78, “Standard Practices for the Measurement of Radioactivity”. American Society for Testing and Materials, Philadelphia, PA (1986).

(9) Ibid, Designation D-3649-85, “Standard Practice for High Resolution Gamma Spectrometry”.

(10) Ibid, Designation D-1943-81, “Standard Test Method for Alpha Particle Radioactivity of Water”.

(11) Ibid, Designation D-1890-81, “Standard Test Method for Beta Particle Radioactivity of Water”.

(12) Ibid, Designation D-2459-72, “Standard Test Method for Gamma Spectrometry of Water”.

(13) Ibid, Designation D-3972-82, “Standard Test Method for Isotopic Uranium in Water by Radiochemistry”.

(14) Ibid, Designation D-2907-83, “Standard Test Methods for Microquantities of Uranium in Water by Fluorometry”.

(15) Ibid, Designation E-318, “Standard Test Method for Uranium in Aqueous Solutions by Colorimetry”.

(16) Ibid, Designation D-3084-75, “Standard Practice for Alpha Spectrometry of Water”.

(17) Corley, J.P. and C.D. Corbit, “A Guide for Effluent Radiological Measurements at DOE Installations”, DOE/EP-0096, Pacific Northwest Laboratories, Richland, Washington (1983).

(18) Department of Energy, “RESL Analytical Chemistry Branch Procedures Manual”, IDO-12096, U.S. Department of Energy, Idaho Falls, Idaho (1982).

(19) Environmental Protection Agency, “Radiochemical Analytical Procedures for Analysis of Environmental Samples”, EMSL-LV-0539-17, U.S. Environmental Protection Agency, Environmental Monitoring and Support Laboratory, Las Vegas, Nevada (1979).

(20) Environmental Protection Agency, “Radiochemistry Procedures Manual”, EPA 520/5-84-006, Eastern Environmental Radiation Facility, Montgomery, Alabama (1984).

(21) National Council on Radiation Protection and Measurements, NCRP Report No. 50, “Environmental Radiation Measurements”, National Council on Radiation Protection and Measurement, Bethesda, Maryland (1976).

(22) Ibid, Report No. 47, “Tritium Measurement Techniques”. (1976).

(23) Ibid, Report No. 58 “A Handbook of Radioactivity Measurement Procedures” (1985).

(24) Environmental Protection Agency, “Indoor Radon and Radon Decay Product Measurement Protocols”, EPA 520/1-89-009, U.S. Environmental Protection Agency, Washington, DC (1989).

## Method 115—Monitoring for Radon-222 Emissions

This appendix describes the monitoring methods which must be used in determining the radon-222 emissions from underground uranium mines, uranium mill tailings piles, phosphogypsum stacks, and other piles of waste material emitting radon.

### *1. Radon-222 Emissions from Underground Uranium Mine Vents*

1.1 Sampling Frequency and Calculation of Emissions. Radon-222 emissions from underground uranium mine vents shall be determined using one of the following methods:

1.1.1 Continuous Measurement. These measurements shall be made and the emissions calculated as follows:

(a) The radon-222 concentration shall be continuously measured at each mine vent whenever the mine ventilation system is operational.

(b) Each mine vent exhaust flow rate shall be measured at least 4 times per year.

(c) A weekly radon-222 emission rate for the mine shall be calculated and recorded weekly as follows:

$A_w = C_1 Q_1 T_1 + C_2 Q_2 T_2 + \ldots C_i Q_i T_i$

Where:

$A_w$ =Total radon-222 emitted from the mine during week (Ci)

$C_i$ =Average radon-222 concentration in mine vent i(Ci/$m^3$ )

$Q_i$ =Volumetric flow rate from mine vent i($m^3$ /hr)

$T_i$ =Hours of mine ventilation system operation during week for mine vent i(hr)

(d) The annual radon-222 emission rate is the sum of the weekly emission rates during a calendar year.

1.1.2 Periodic Measurement. This method is applicable only to mines that continuously operate their ventilation system except for extended shutdowns. Mines which start up and shut down their ventilation system frequently must use the continuous measurement method describe in Section 1.1.1 above. Emission rates determined using periodic measurements shall be measured and calculated as follows:

(a) The radon-222 shall be continuously measured at each mine vent for at least one week every three months.

(b) Each mine vent exhaust flow rate shall be measured at least once during each of the radon-222 measurement periods.

(c) A weekly radon-222 emission rate shall be calculated for each weekly period according to the method described in Section 1.1.1. In this calculation T=168 hr.

(d) The annual radon-222 emission rate from the mine should be calculated as follows:

$$A_y = \frac{52 - W_s}{n} \left( A_{w1} + A_{w2} + \cdots A_{wi} \right)$$

Where:

$A_y$ =Annual radon-222 emission rate from the mine(Ci)

$A_{wi}$ =Weekly radon-222 emission rate during the measurement period i (Ci)

n=Number of weekly measurement periods per year

$W_s$ =Number of weeks during the year that the mine ventilation system is shut down in excess of 7 consecutive days, i.e. the sum of the number of weeks each shut down exceeds 7 days

1.2 Test Methods and Procedures

Each underground mine required to test its emissions, unless an equivalent or alternative method has been approved by the Administrator, shall use the following test methods:

1.2.1 Test Method 1 of appendix A to part 60 shall be used to determine velocity traverses. The sampling point in the duct shall be either the centroid of the cross section or the point of average velocity.

1.2.2 Test Method 2 of appendix A to part 60 shall be used to determine velocity and volumetric flow rates.

1.2.3 Test Methods A-6 or A-7 of appendix B, Method 114 to part 61 shall be used for the analysis of radon-222. Use of Method A-7 requires prior approval of EPA based on conditions described in appendix B.

1.2.4 A quality assurance program shall be conducted in conformance with the programs described for Continuous Radon Monitors and Alpha Track Detectors in EPA 520/1-89-009. (2)

*2. Radon-222 Emissions from Uranium Mill Tailings Piles*

2.1 Measurement and Calculation of Radon Flux from Uranium Mill Tailings Piles.

2.1.1 Frequency of Flux Measurement. A single set of radon flux measurements may be made, or if the owner or operator chooses, more frequent measurements may be made over a one year period. These measurements may involve quarterly, monthly or weekly intervals. All radon measurements shall be made as described in paragraphs 2.1.2 through 2.1.6 except that for measurements made over a one year period, the requirement of paragraph 2.1.4(c) shall not apply. The mean radon flux from the pile shall be the arithmetic mean of the mean radon flux for each measurement period. The weather conditions, moisture content of the tailings and area of the pile covered by water existing at the time of the measurement shall be chosen so as to provide measurements representative of the long term radon flux from the pile and shall be subject to EPA review and approval.

2.1.2 Distribution of Flux Measurements. The distribution and number of radon flux measurements required on a pile will depend on clearly defined areas of the pile (called regions) that can have significantly different radon fluxes due to surface conditions. The mean radon flux shall be determined for each individual region of the pile. Regions that shall be considered for operating mill tailings piles are:

(a) Water covered areas,

(b) Water saturated areas (beaches),

(c) Dry top surface areas, and

(d) Sides, except where earthen material is used in dam construction.

For mill tailings after disposal the pile shall be considered to consist of only one region.

2.1.3 Number of Flux Measurements. Radon flux measurements shall be made within each region on the pile, except for those areas covered with water. Measurements shall be made at regularly spaced locations across the surface of the region, realizing that surface roughness will prohibit measurements in some areas of a region. The minimum number of flux measurements considered necessary to determine a representative mean radon flux value for each type of region on an operating pile is:

(a) Water covered area—no measurements required as radon flux is assumed to be zero,

(b) Water saturated beaches—100 radon flux measurements,

(c) Loose and dry top surface—100 radon flux measurements,

(d) Sides—100 radon flux measurements, except where earthern material is used in dam construction.

For a mill tailings pile after disposal which consists of only one region a minimum of 100 measurements are required.

2.1.4 Restrictions to Radon Flux Measurements. The following restrictions are placed on making radon flux measurements:

(a) Measurements shall not be initiated within 24 hours of a rainfall.

(b) If a rainfall occurs during the 24 hour measurements period, the measurement is invalid if the seal around the lip of the collector has washed away or if the collector is surrounded by water.

(c) Measurements shall not be performed if the ambient temperature is below 35 °F or if the ground is frozen.

2.1.5 Areas of Pile Regions. The approximate area of each region of the pile shall be determined in units of square meters.

2.1.6 Radon Flux Measurement. Measuring radon flux involves the adsorption of radon on activated charcoal in a large-area collector. The radon collector is placed on the surface of the pile area to be measured and allowed to collect radon for a time period of 24 hours. The radon collected on the charcoal is measured by gamma-ray spectroscopy. The detailed measurement procedure provided in appendix A of EPA 520/5-85-0029(1) shall be used to measure the radon flux on uranium mill tailings, except the surface of the tailings shall not be penetrated by the lip of the radon collector as directed in the procedure, rather the collector shall be carefully positioned on a flat surface with soil or tailings used to seal the edge.

2.1.7 Calculations. The mean radon flux for each region of the pile and for the total pile shall be calculated and reported as follows:

(a) The individual radon flux calculations shall be made as provided in appendix A EPA 86 (1). The mean radon flux for each region of the pile shall be calculated by summing all individual flux measurements for the region and dividing by the total number of flux measurements for the region.

(b) The mean radon flux for the total uranium mill tailings pile shall be calculated as follows.

$$J_s = \frac{J_1 A_1 + \cdots J_2 A_2 \cdots J_i A_i}{A_t}$$

Where:

$J_s$ =Mean flux for the total pile (pCi/m$^2$ -s)

$J_i$ =Mean flux measured in region i (pCi/m$^2$ -s)

$A_i$ =Area of region i (m$^2$ )

$A_t$ =Total area of the pile (m$^2$ )

2.1.8 Reporting. The results of individual flux measurements, the approximate locations on the pile, and the mean radon flux for each region and the mean radon flux for the total stack shall be included in the emission test report. Any condition or unusual event that occurred during the measurements that could significantly affect the results should be reported.

*3.0 Radon-222 Emissions from Phosphogypsum Stacks.*

3.1 Measurement and Calculation of the Mean Radon Flux. Radon flux measurements shall be made on phosphogypsum stacks as described below:

3.1.1 Frequency of Measurements. A single set of radon flux measurements may be made after the phosphogypsum stack becomes inactive, or if the owner or operator chooses, more frequent measurements may be made over a one year period. These measurements may involve quarterly, monthly or weekly intervals. All radon measurements shall be made as described in paragraphs 3.1.2 through 3.1.6 except that for measurements made

over a one year period, the requirement of paragraph 3.1.4(c) shall not apply. For measurements made over a one year period, the radon flux shall be the arithmetic mean of the mean radon flux for each measurement period.

3.1.2 Distribution and Number of Flux Measurements. The distribution and number of radon flux measurements required on a stack will depend on clearly defined areas of the stack (called regions) that can have significantly different radon fluxes due to surface conditions. The mean radon flux shall be determined for each individual region of the stack. Regions that shall be considered are:

(a) Water covered areas,

(b) Water saturated areas (beaches),

(c) Loose and dry top surface areas,

(d) Hard-packed roadways, and

(e) Sides.

3.1.3 Number of Flux Measurements. Radon flux measurements shall be made within each region on the phosphogypsum stack, except for those areas covered with water. Measurements shall be made at regularly spaced locations across the surface of the region, realizing that surface roughness will prohibit measurements in some areas of a region. The minimum number of flux measurements considered necessary to determine a representative mean radon flux value for each type of region is:

(a) Water covered area—no measurements required as radon flux is assumed to be zero,

(b) Water saturated beaches—50 radon flux measurements,

(c) Loose and dry top surface—100 radon flux measurements,

(d) Hard-packed roadways—50 radon flux measurements, and

(e) Sides—100 radon flux measurements.

A minimum of 300 measurements are required. A stack that has no water cover can be considered to consist of two regions, top and sides, and will require a minimum of only 200 measurements.

3.1.4 Restrictions to Radon Flux Measurements. The following restrictions are placed on making radon flux measurements:

(a) Measurements shall not be initiated within 24 hours of a rainfall.

(b) If a rainfall occurs during the 24 hour measurement period, the measurement is invalid if the seal around the lip of the collector has washed away or if the collector is surrounded by water.

(c) Measurements shall not be performed if the ambient temperature is below 35 °F or if the ground is frozen.

3.1.5 Areas of Stack Regions. The approximate area of each region of the stack shall be determined in units of square meters.

3.1.6 Radon Flux Measurements. Measuring radon flux involves the adsorption of radon on activated charcoal in a large-area collector. The radon collector is placed on the surface of the stack area to be measured and allowed to collect radon for a time period of 24 hours. The radon collected on the charcoal is measured by gamma-ray spectroscopy. The detailed measurement procedure provided in appendix A of EPA 520/5-85-0029(1) shall be used to measure the radon flux on phosphogypsum stacks, except the surface of the phosphogypsum shall not be

penetrated by the lip of the radon collector as directed in the procedure, rather the collector shall be carefully positioned on a flat surface with soil or phosphogypsum used to seal the edge.

3.1.7 Calculations. The mean radon flux for each region of the phosphogypsum stack and for the total stack shall be calculated and reported as follows:

(a) The individual radon flux calculations shall be made as provided in appendix A EPA 86 (1). The mean radon flux for each region of the stack shall be calculated by summing all individual flux measurements for the region and dividing by the total number of flux measurements for the region.

(b) The mean radon flux for the total phosphogypsum stack shall be calculated as follows.

$$J_s = \frac{J_1A_1 + J_2A_2 + \cdots J_iA_i}{A_t}$$

Where:

$J_s$ =Mean flux for the total stack (pCi/$m^2$ -s)

$J_i$ =Mean flux measured in region i (pCi/$m^2$ -s)

$A_i$ =Area of region i ($m^2$ )

$A_t$ =Total area of the stack

3.1.8 Reporting. The results of individual flux measurements, the approximate locations on the stack, and the mean radon flux for each region and the mean radon flux for the total stack shall be included in the emission test report. Any condition or unusual event that occurred during the measurements that could significantly affect the results should be reported.

*4.0 Quality Assurance Procedures for Measuring Rn-222 Flux*

A. Sampling Procedures

Records of field activities and laboratory measurements shall be maintained. The following information shall be recorded for each charcoal canister measurement:

(a) Site

(b) Name of pile

(c) Sample location

(d) Sample ID number

(e) Date and time on

(f) Date and time off

(g) Observations of meteorological conditions and comments

Records shall include all applicable information associated with determining the sample measurement, calculations, observations, and comments.

B. Sample Custody

Custodial control of all charcoal samples exposed in the field shall be maintained in accordance with EPA chain-of-custody field procedures. A control record shall document all custody changes that occur between the field and laboratory personnel.

C. Calibration Procedures and Frequency

The radioactivity of two standard charcoal sources, each containing a carefully determined quantity of radium-226 uniformly distributed through 180g of activated charcoal, shall be measured. An efficiency factor is computed by dividing the average measured radioactivity of the two standard charcoal sources, minus the background, in cpm by the known radioactivity of the charcoal sources in dpm. The same two standard charcoal sources shall be counted at the beginning and at the end of each day's counting as a check of the radioactivity counting equipment. A background count using unexposed charcoal should also be made at the beginning and at the end of each counting day to check for inadvertent contamination of the detector or other changes affecting the background. The unexposed charcoal comprising the blank is changed with each new batch of charcoal used.

D. Internal Quality Control Checks and Frequency

The charcoal from every tenth exposed canister shall be recounted. Five percent of the samples analyzed shall be either blanks (charcoal having no radioactivity added) or samples spiked with known quantities of radium-226.

E. Data Precision, Accuracy, and Completeness

The precision, accuracy, and completeness of measurements and analyses shall be within the following limits for samples measuring greater than 1.0 $pCi/m^2$ −s.

(a) Precision: 10%

(b) Accuracy: ±10%

(c) Completeness: at least 85% of the measurements must yield useable results.

5.0 References

(1) Hartley, J.N. and Freeman, H.D., “Radon Flux Measurements on Gardinier and Royster phosphogypsum Piles Near Tampa and Mulberry, Florida,” U.S. Environmental Protection Agency Report, EPA 520/5-85-029, January 1986.

(2) Environmental Protection Agency, “Indoor Radon and Radon Decay Product Measurement Protocols”, EPA 520/1-89-009, U.S. Environmental Protection Agency, Washington, DC. (1989).

[38 FR 8826, Apr. 6, 1973]

EDITORIAL NOTES: 1. For FEDERAL REGISTER citations to appendix B see the List of CFR Sections Affected, which appears in the Finding Aids section of the printed volume and at *www.fdsys.gov* .

2. At 65 FR 62161, Oct. 17, 2000, appendix B to part 61 was amended by revising Methods 101, 101A, 102, 103, 104, 105, 106, 107, 107A, 108, 108A, 108B, 108C, and 111. However, because the amendment contains no revised text for Method 107A, this part of the revision could not be incorporated.

**Appendix C to Part 61—Quality Assurance Procedures**

*Procedure 1—Determination of Adequate Chromatographic Peak Resolution*

In this method of dealing with resolution, the extent to which one chromatographic peak overlaps another is determined.

For convenience, consider the range of the elution curve of each compound as running from −2σ to +2σ. This range is used in other resolution criteria, and it contains 95.45 percent of the area of a normal curve. If two peaks are separated by a known distance, b, one can determine the fraction of the area of one curve that lies within the range of the other. The extent to which the elution curve of a contaminant compound overlaps the curve of a compound that is under analysis is found by integrating the contaminant curve over the limits $b-2\sigma_s$ to $b+2\sigma_s$, where $\sigma_s$ is the standard deviation of the sample curve.

This calculation can be simplified in several ways. Overlap can be determined for curves of unit area; then actual areas can be introduced. Desired integration can be resolved into two integrals of the normal distribution function for which there are convenient calculation programs and tables. An example would be Program 15 in Texas Instruments Program Manual ST1, 1975, Texas Instruments, Inc., Dallas, Texas 75222.

$$\frac{1}{\sqrt{2\pi}\sigma_c}\int_{b-2\sigma_s}^{b+2\sigma_s} e^{\left(\frac{-t^2}{2\sigma_c^2}\right)}dt = \frac{1}{\sqrt{2\pi}}\int_{\frac{b-2\sigma_s}{\sigma_c}}^{\infty} e^{\left(\frac{-x^2}{2}\right)}dx - \frac{1}{\sqrt{2\pi}}\int_{\frac{b+2\sigma_s}{\sigma_c}}^{\infty} e^{\left(\frac{-x^2}{2}\right)}dx$$

The following calculation steps are required:*

1. $2\sigma_s = t_s/\sqrt{2\ \ln 2}$
2. $\sigma_c = t_c/2\sqrt{2\ \ln 2}$
3. $x_1 = (b-2\sigma_s)/\sigma_c$
4. $x_2 = (b+2\sigma_s)/\sigma_c$
5. $Q(x_1) = \frac{1}{\sqrt{2\pi}}\int_{x_1}^{\infty} e^{\left(\frac{-x^2}{2}\right)}dx$
6. $Q(x_2) = \frac{1}{\sqrt{2\pi}}\int_{x_2}^{\infty} e^{\left(\frac{-x^2}{2}\right)}dx$
7. $I_o = Q(x_1) - Q(x_2)$
8. $A_o = I_o A_c/A_s$
9. Percentage overlap = $A_o \times 100$ ,

where:

$A_s$ = Area of the sample peak of interest determined by electronic integration or by the formula $A_s = h_s t_s$

$A_c$ = Area of the contaminant peak, determined in the same manner as $A_s$.

b = Distance on the chromatographic chart that separates the maxima of the two peaks.

$H_s$ = Peak height of the sample compound of interest, measured from the average value of the baseline to the maximum of the curve.

$t_s$ = Width of sample peak of interest at 1/2 peak height.

$t_c$ = Width of the contaminant peak at 1/2 of peak height.

$\sigma_s$ = Standard deviation of the sample compound of interest elution curve.

$\sigma_c$ = Standard deviation of the contaminant elution curve.

$Q(x_1)$ = Integral of the normal distribution function from $x_1$ to infinity.

$Q(x_2)$ = Integral of the normal distribution function from $x_2$ to infinity.

$I_o$ = Overlap integral.

$A_o$ = Area overlap fraction.

*In most instances, $Q(x_2)$ is very small and may be neglected.

In judging the suitability of alternate GC columns or the effects of altering chromatographic conditions, one can employ the area overlap as the resolution parameter with a specific maximum permissible value.

The use of Gaussian functions to describe chromatographic elution curves is widespread. However, some elution curves are highly asymmetric. In cases where the sample peak is followed by a contaminant that has a leading edge that rises sharply but the curve then tails off, it may be possible to define an effective width for $t_c$ as “twice the distance from the leading edge to a perpendicular line through the maxim of the contaminant curve, measured along a perpendicular bisection of that line.”

*Procedure 2—Procedure for Field Auditing GC Analysis*

Responsibilities of audit supervisor and analyst at the source sampling site include the following:

A. The audit supervisor verifies that audit cylinders are stored in a safe location both before and after the audit to prevent vandalism.

B. At the beginning and conclusion of the audit, the analyst records each cylinder number and pressure. An audit cylinder is never analyzed when the pressure drops below 200 psi.

C. During the audit, the analyst performs a minimum of two consecutive analyses of each audit cylinder gas. The audit must be conducted to coincide with the analysis of source test samples, normally immediately after GC calibration and prior to sample analyses.

D. At the end of audit analyses, the audit supervisor requests the calculated concentrations from the analyst and compares the results with the actual audit concentrations. If each measured concentration agrees with the respective actual concentration within ±10 percent, he directs the analyst to begin analyzing source samples. Audit supervisor judgment and/or supervisory policy determine action when agreement is not within ±10 percent. When a consistent bias in excess of 10 percent is found, it may be possible to proceed with the sample analysis, with a corrective factor to be applied to the results at a later time. However, every attempt should be made to locate the cause of the discrepancy, as it may be misleading. The audit supervisor records each cylinder number, cylinder pressure (at the end of the audit), and all calculated concentrations. The individual being audited must not under any circumstance be told actual audit concentrations until calculated concentrations have been submitted to the audit supervisor.

Field Audit Report

*Part A*— To be filled out by organization supplying audit cylinders.

1. Organization supplying audit sample(s) and shipping address:

2. Audit supervisor, organization, and phone number:

3. Shipping instructions: Name, Address, Attention:

4. Guaranteed arrival date for cylinders:

5. Planned shipping date for cylinders:

6. Details on audit cylinders from last analysis:

| | **Low conc.** | **High conc.** |
|---|---|---|
| a. Date of last analysis | | |
| b. Cylinder number | | |
| c. Cylinder pressure, psi | | |
| d. Audit gas(es)/balance gas | | |
| e. Audit gas(es), ppm | | |
| f. Cylinder construction | | |

*Part B* —To be filled out by audit supervisor.

1. Process sampled:

2. Audit location:

3. Name of individual audit:

4. Audit date:

5. Audit results:

| | **Low conc. cylinder** | **High conc. cylinder** |
|---|---|---|
| a. Cylinder number | | |
| b. Cylinder pressure before audit, psi | | |
| c. Cylinder pressure after audit, psi | | |
| d. Measured concentration, ppm Injection #1* Injection #2* Average | | |
| e. Actual audit concentration, ppm (Part A, 6e) | | |
| f. Audit accuracy:[1] | | |
| Low Conc. Cylinder | | |
| High Conc. Cylinder | | |
| Percent [1]accuracy= | | |
| Measured Conc.−Actual Conc. | | |
| _____ ×100 | | |
| Actual Conc. | | |
| g. Problems detected (if any) | | |

[1] Results of two consecutive injections that meet the sample analysis criteria of the test method.

[47 FR 39178, Sept. 7, 1982]

**Appendix D to Part 61—Methods for Estimating Radionuclide Emissions**

*1. Purpose and Background*

Facility owners or operators may estimate radionuclide emissions to the atmosphere for dose calculations instead of measuring emissions. Particulate emissions from mill tailings piles should be estimated using the procedures listed in reference re #2. All other emissions may be estimated by using the “Procedures” listed below, or using the method described in reference #1.

*2. Procedure*

To estimate emissions to the atmosphere:

(a) Determine the amount (in curies) used at facilities for the period under consideration. Radioactive materials in sealed packages that remain unopened, and have not leaked during the assessment period should not be included in the calculation.

(b) Multiply the amount used by the following factors which depend on the physical state of the radionuclide. They are:

(i) 1 for gases;

(ii) $10^{-3}$ for liquids or particulate solids; and

(iii) $10^{-6}$ for solids.

If any nuclide is heated to a temperature of 100 degrees Celsius or more, boils at a temperature of 100 degrees Celsius or less, or is intentionally dispersed into the environment, it must be considered to be a gas.

(c) If a control device is installed between the place of use and the point of release, multiply emissions from (b) by an adjustment factor. These are presented in Table 1.

Table 1—Adjustment to Emission Factors for Effluent Controls

| **Controls** | **Types of radionuclides controlled** | **Adjustment factor to emissions** | **Comments and conditions** |
|---|---|---|---|
| HEPA filters | Particulates | 0.01 | Not applicable to gaseous radionuclides; periodic testing is prudent to ensure high removal efficiency. |
| Fabric filter | Particulates | 0.1 | Monitoring would be prudent to guard against tears in filter. |
| Sintered metal | Particulates | 1 | Insufficient data to make recommendation. |
| Activated carbon filters | Iodine gas | 0.1 | Efficiency is time dependent; monitoring is necessary to ensure effectiveness. |
| Douglas bags: Held one week or longer for decay | Xenon | 0.5/wk | Based on xenon half-life of 5.3 days; |
| Douglas bags: Released within one week | Xenon | 1 | Provides no reduction of exposure to general public. |
| Venturi scrubbers | Particulates<br>Gases | 0.05<br>1 | Although venturis may remove gases, variability in gaseous removal efficiency dictates adjustment factor for particulates only. |
| Packed bed scrubbers | Gases | 0.1 | Not applicable to particulates. |
| Electrostatic precipitators | Particulates | 0.05 | Not applicable for gaseous radionuclides |
| Xenon traps | Xenon | 0.1 | Efficiency is time dependent; monitoring is necessary to ensure effectiveness. |
| Fume hoods | All | 1 | Provides no reduction to general public exposures. |
| Vent stacks | All | 1 | Generally provides no reduction of exposure to general public. |

*References*

(1) Environmental Protection Agency, “A Guide for Determining Compliance with the Clean Air Act Standards for *Radionuclides Emissions from NRC-Licensed and Non-DOE Federal Facilities”, EPA 520/1-89-002, January 1989.*

(2) Nuclear Regulatory Commission, “Methods for Estimating Radioactive and Toxic Airborne Source Terms for Uranium Milling Operations”, U.S. Nuclear Regulatory Commission Regulatory Guide 3.59, March 1987.

[54 FR 51711, Dec. 15, 1989]

**Appendix E to Part 61—Compliance Procedures Methods for Determining Compliance With Subpart I**

*1. Purpose and Background*

This Appendix provides simplified procedures to reduce the burden on Nuclear Regulatory Commission (NRC) licensees, and non-Department of Energy Federal facilities in determining compliance with 40 CFR part 61, subpart I. The procedures consist of a series of increasingly more stringent steps, depending on the facility's potential to exceed the standard.

First, a facility can be found in compliance if the quantity of radioactive material possessed during the year is less than that listed in a table of annual possession quantities. A facility will also be in compliance if the average annual radionuclide emission concentration is less than that listed in a table of air concentration levels. If the facility is not in compliance by these tables, it can establish compliance by estimating a dose using screening procedure developed by the National Council on Radiation Protection and Measurements with a radiological source term derived using EPA approved emission factors. These procedures are described in a “Guide for Determining Compliance with the Clean Air Act Standards for Radionuclide Emissions From NRC-Licensed and Non-DOE Federal Facilities.”

A user-friendly computer program called COMPLY has been developed to reduce the burden on the regulated community. The Agency has also prepared a “User's Guide for the COMPLY Code” to assist the regulated community in using the code, and in handling more complex situations such as multiple release points. The basis for these compliance procedures are provided in “Background Information Document: Procedures Approved for Demonstrating Compliance with 40 CFR Part 61, Subpart I”. The compliance model is the highest level in the COMPLY computer code and provides for the most realistic assessment of dose by allowing the use of site-specific information.

*2. Table of Annual Possession Quantity*

(a) Table 1 may be used for determining if facilities are in compliance with the standard. The possession table can only be used if the following conditions are met:

(i) No person lives within 10 meters of any release point; and

(ii) No milk, meat, or vegetables are produced within 100 meters of any release point.

(b) Procedures described in Reference (1) shall be used to determine compliance or exemption from reporting by use of Table 2.

Table 1—Annual Possession Quantities for Environmental Compliance

[Annual Possession Quantities (Ci/yr)]

| Radionuclide | Gaseous form* | Liquid/powder forms | Solid form* |
|---|---|---|---|
| Ac-225 | 9.6E−05 | 9.6E−02 | 9.6E+01 |
| Ac-227 | 1.6E−07 | 1.6E−04 | 1.6E−01 |
| Ac-228 | 3.4E−03 | 3.4E+00 | 3.4E+03 |
| Ag-106 | 1.6E+00 | 1.6E+03 | 1.6E+06 |
| Ag-106m | 2.6E−03 | 2.6E+00 | 2.6E+03 |
| Ag-108m | 6.5E−06 | 6.5E−03 | 6.5E+00 |
| Ag-110m | 9.4E−05 | 9.4E−02 | 9.4E+01 |
| Ag-111 | 6.7E−02 | 6.7E+01 | 6.7E+04 |
| Al-26 | 4.0E−06 | 4.0E−03 | 4.0E+00 |
| Am-241 | 2.3E−06 | 2.3E−03 | 2.3E+00 |
| Am-242 | 1.8E−02 | 1.8E+01 | 1.8E+04 |
| Am-242m | 2.5E−06 | 2.5E−03 | 2.5E+00 |

| Radionuclide | Gaseous form* | Liquid/powder forms | Solid form* |
|---|---|---|---|
| Am-243 | 2.3E−06 | 2.3E−03 | 2.3E+00 |
| Am-244 | 4.6E−02 | 4.6E+01 | 4.6E+04 |
| Am-245 | 7.0E+00 | 7.0E+03 | 7.0E+06 |
| Am-246 | 9.8E−01 | 9.8E+02 | 9.8E+05 |
| Ar-37 | 1.4E+06 | | |
| Ar-41 | 1.4E+00 | | |
| As-72 | 2.9E−02 | 2.9E+01 | 2.9E+04 |
| As-73 | 6.0E−02 | 6.0E+01 | 6.0E+04 |
| As-74 | 4.3E−03 | 4.3E+00 | 4.3E+03 |
| As-76 | 8.8E−02 | 8.8E+01 | 8.8E+04 |
| As-77 | 7.9E−01 | 7.9E+02 | 7.9E+05 |
| At-211 | 1.0E−02 | 1.0E+01 | 1.0E+04 |
| Au-193 | 4.2E−01 | 4.2E+02 | 4.2E+05 |
| Au-194 | 3.5E−02 | 3.5E+01 | 3.5E+04 |
| Au-195 | 3.3E−03 | 3.3E+00 | 3.3E+03 |
| Au-198 | 4.6E−02 | 4.6E+01 | 4.6E+04 |
| Au-199 | 1.5E−01 | 1.5E+02 | 1.5E+05 |
| Ba-131 | 1.0E−02 | 1.0E+01 | 1.0E+04 |
| Ba-133 | 4.9E−05 | 4.9E−02 | 4.9E+01 |
| Ba-133m | 9.3E−02 | 9.3E+01 | 9.3E+04 |
| Ba-135m | 5.8E−01 | 5.8E+02 | 5.8E+05 |
| Ba-139 | 4.7E+00 | 4.7E+03 | 4.7E+06 |
| Ba-140 | 2.1E−03 | 2.1E+00 | 2.1E+03 |
| Ba-141 | 1.3E+00 | 1.3E+03 | 1.3E+06 |
| Ba-142 | 1.1E+00 | 1.1E+03 | 1.1E+06 |
| Be-7 | 2.3E−02 | 2.3E+01 | 2.3E+04 |
| Be-10 | 3.0E−03 | 3.0E+00 | 3.0E+03 |
| Bi-206 | 3.1E−03 | 3.1E+00 | 3.1E+03 |
| Bi-207 | 8.4E−06 | 8.4E−03 | 8.4E+00 |
| Bi-210 | 4.2E−03 | 4.2E+00 | 4.2E+03 |
| Bi-212 | 4.7E−02 | 4.7E+01 | 4.7E+04 |
| Bi-213 | 6.0E−02 | 6.0E+01 | 6.0E+04 |
| Bi-214 | 1.4E−01 | 1.4E+02 | 1.4E+05 |
| Bk-249 | 7.0E−04 | 7.0E−01 | 7.0E+02 |
| Bk-250 | 1.0E−01 | 1.0E+02 | 1.0E+05 |
| Br-77 | 7.5E−02 | 7.5E+01 | 7.5E+04 |
| Br-80 | 1.2E+01 | 1.2E+04 | 1.2E+07 |
| Br-80m | 1.5E+00 | 1.5E+03 | 1.5E+06 |
| Br-82 | 1.6E−02 | 1.6E+01 | 1.6E+04 |
| Br-83 | 9.9E+00 | 9.9E+03 | 9.9E+06 |
| Br-84 | 5.6E−01 | 5.6E+02 | 5.6E+05 |
| C-11 | 1.3E+00 | 1.3E+03 | 1.3E+06 |
| C-14 | 2.9E−01 | 2.9E+02 | 2.9E+05 |
| Ca-41 | 2.7E−02 | 2.7E+01 | 2.7E+04 |

| Radionuclide | Gaseous form* | Liquid/powder forms | Solid form* |
|---|---|---|---|
| Ca-45 | 5.8E−02 | 5.8E+01 | 5.8E+04 |
| Ca-47 | 1.1E−02 | 1.1E+01 | 1.1E+04 |
| Cd-109 | 5.0E−03 | 5.0E+00 | 5.0E+03 |
| Cd-113 | 3.3E−04 | 3.3E−01 | 3.3E+02 |
| Cd-113m | 4.4E−04 | 4.4E−01 | 4.4E+02 |
| Cd-115 | 5.4E−02 | 5.4E+01 | 5.4E+04 |
| Cd-115m | 1.0E−02 | 1.0E+01 | 1.0E+04 |
| Cd-117 | 5.6E−02 | 5.6E+01 | 5.6E+04 |
| Cd-117m | 1.3E−01 | 1.3E+02 | 1.3E+05 |
| Ce-139 | 2.6E−03 | 2.6E+00 | 2.6E+03 |
| Ce-141 | 1.8E−02 | 1.8E+01 | 1.8E+04 |
| Ce-143 | 1.0E−01 | 1.0E+02 | 1.0E+05 |
| Ce-144 | 1.7E−03 | 1.7E+00 | 1.7E+03 |
| Cf-248 | 2.0E−05 | 2.0E−02 | 2.0E+01 |
| Cf-249 | 1.7E−06 | 1.7E−03 | 1.7E+00 |
| Cf-250 | 4.0E−06 | 4.0E−03 | 4.0E+00 |
| Cf-251 | 1.7E−06 | 1.7E−03 | 1.7E+00 |
| Cf-252 | 6.4E−06 | 6.4E−03 | 6.4E+00 |
| Cf-253 | 3.3E−04 | 3.3E−01 | 3.3E+02 |
| Cf-254 | 3.6E−06 | 3.6E−03 | 3.6E+00 |
| Cl-36 | 1.9E−04 | 1.9E−01 | 1.9E+02 |
| Cl-38 | 6.5E−01 | 6.5E+02 | 6.5E+05 |
| Cm-242 | 6.0E−05 | 6.0E−02 | 6.0E+01 |
| Cm-243 | 3.3E−06 | 3.3E−03 | 3.3E+00 |
| Cm-244 | 4.2E−06 | 4.2E−03 | 4.2E+00 |
| Cm-245 | 2.3E−06 | 2.3E−03 | 2.3E+00 |
| Cm-246 | 2.3E−06 | 2.3E−03 | 2.3E+00 |
| Cm-247 | 2.3E−06 | 2.3E−03 | 2.3E+00 |
| Cm-248 | 6.4E−07 | 6.4E−04 | 6.4E−01 |
| Cm-249 | 4.6E+00 | 4.6E+03 | 4.6E+06 |
| Cm-250 | 1.1E−07 | 1.1E−04 | 1.1E−01 |
| Co-56 | 2.4E−04 | 2.4E−01 | 2.4E+02 |
| Co-57 | 1.6E−03 | 1.6E+00 | 1.6E+03 |
| Co-58 | 9.0E−04 | 9.0E−01 | 9.0E+02 |
| Co-58m | 1.7E−01 | 1.7E+02 | 1.7E+05 |
| Co-60 | 1.6E−05 | 1.6E−02 | 1.6E+01 |
| Co-60m | 4.0E+00 | 4.0E+03 | 4.0E+06 |
| Co-61 | 3.8E+00 | 3.8E+03 | 3.8E+06 |
| Cr-49 | 9.0E−01 | 9.0E+02 | 9.0E+05 |
| Cr-51 | 6.3E−02 | 6.3E+01 | 6.3E+04 |
| Cs-129 | 1.5E−01 | 1.5E+02 | 1.5E+05 |
| Cs-131 | 2.8E−01 | 2.8E+02 | 2.8E+05 |
| Cs-132 | 1.3E−02 | 1.3E+01 | 1.3E+04 |
| Cs-134 | 5.2E−05 | 5.2E−02 | 5.2E+01 |

| Radionuclide | Gaseous form* | Liquid/powder forms | Solid form* |
|---|---|---|---|
| Cs-134m | 3.2E−01 | 3.2E+02 | 3.2E+05 |
| Cs-135 | 2.4E−02 | 2.4E+01 | 2.4E+04 |
| Cs-136 | 2.1E−03 | 2.1E+00 | 2.1E+03 |
| Cs-137 | 2.3E−05 | 2.3E−02 | 2.3E+01 |
| Cs-138 | 4.4E−01 | 4.4E+02 | 4.4E+05 |
| Cu-61 | 4.0E−01 | 4.0E+02 | 4.0E+05 |
| Cu-64 | 5.2E−01 | 5.2E+02 | 5.2E+05 |
| Cu-67 | 1.5E−01 | 1.5E+02 | 1.5E+05 |
| Dy-157 | 4.4E−01 | 4.4E+02 | 4.4E+05 |
| Dy-165 | 5.6E+00 | 5.6E+03 | 5.6E+06 |
| Dy-166 | 8.1E−02 | 8.1E+01 | 8.1E+04 |
| Er-169 | 4.0E−01 | 4.0E+02 | 4.0E+05 |
| Er-171 | 3.6E−01 | 3.6E+02 | 3.6E+05 |
| Es-253 | 2.6E−04 | 2.6E−01 | 2.6E+02 |
| Es-254 | 2.3E−05 | 2.3E−02 | 2.3E+01 |
| Es-254m | 1.8E−03 | 1.8E+00 | 1.8E+03 |
| Eu-152 | 1.6E−05 | 1.6E−02 | 1.6E+01 |
| Eu-152m | 3.5E−01 | 3.5E+02 | 3.5E+05 |
| Eu-154 | 2.0E−05 | 2.0E−02 | 2.0E+01 |
| Eu-155 | 5.2E−04 | 5.2E−01 | 5.2E+02 |
| Eu-156 | 3.2E−03 | 3.2E+00 | 3.2E+03 |
| F-18 | 5.6E−01 | 5.6E+02 | 5.6E+05 |
| Fe-52 | 4.9E−02 | 4.9E+01 | 4.9E+04 |
| Fe-55 | 1.4E−01 | 1.4E+02 | 1.4E+05 |
| Fe-59 | 1.3E−03 | 1.3E+00 | 1.3E+03 |
| Fm-254 | 1.8E−02 | 1.8E+01 | 1.8E+04 |
| Fm-255 | 4.0E−03 | 4.0E+00 | 4.0E+03 |
| Fr-223 | 1.4E−01 | 1.4E+02 | 1.4E+05 |
| Ga-66 | 5.6E−02 | 5.6E+01 | 5.6E+04 |
| Ga-67 | 1.1E−01 | 1.1E+02 | 1.1E+05 |
| Ga-68 | 7.6E−01 | 7.6E+02 | 7.6E+05 |
| Ga-72 | 3.6E−02 | 3.6E+01 | 3.6E+04 |
| Gd-152 | 4.4E−06 | 4.4E−03 | 4.4E+00 |
| Gd-153 | 2.0E−03 | 2.0E+00 | 2.0E+03 |
| Gd-159 | 6.8E−01 | 6.8E+02 | 6.8E+05 |
| Ge-68 | 2.3E−04 | 2.3E−01 | 2.3E+02 |
| Ge-71 | 2.6E+00 | 2.6E+03 | 2.6E+06 |
| Ge-77 | 1.0E−01 | 1.0E+02 | 1.0E+05 |
| H-3 | 1.5E+01 | 1.5E+04 | 1.5E+07 |
| Hf-181 | 2.5E−03 | 2.5E+00 | 2.5E+03 |
| Hg-193m | 9.5E−02 | 9.5E+01 | 9.5E+04 |
| Hg-197 | 2.4E−01 | 2.4E+02 | 2.4E+05 |
| Hg-197m | 2.5E−01 | 2.5E+02 | 2.5E+05 |
| Hg-203 | 5.2E−03 | 5.2E+00 | 5.2E+03 |

| Radionuclide | Gaseous form* | Liquid/powder forms | Solid form* |
|---|---|---|---|
| Ho-166 | 2.8E−01 | 2.8E+02 | 2.8E+05 |
| Ho-166m | 6.0E−06 | 6.0E−03 | 6.0E+00 |
| I-123 | 4.9E−01 | 4.9E+02 | 4.9E+05 |
| I-124 | 9.3E−03 | 9.3E+00 | 9.3E+03 |
| I-125 | 6.2E−03 | 6.2E+00 | 6.2E+03 |
| I-126 | 3.7E−03 | 3.7E+00 | 3.7E+03 |
| I-128 | 9.3E+00 | 9.3E+03 | 9.3E+06 |
| I-129 | 2.6E−04 | 2.6E−01 | 2.6E+02 |
| I-130 | 4.6E−02 | 4.6E+01 | 4.6E+04 |
| I-131 | 6.7E−03 | 6.7E+00 | 6.7E+03 |
| I-132 | 2.0E−01 | 2.0E+02 | 2.0E+05 |
| I-133 | 6.7E−02 | 6.7E+01 | 6.7E+04 |
| I-134 | 3.2E−01 | 3.2E+02 | 3.2E+05 |
| I-135 | 1.2E−01 | 1.2E+02 | 1.2E+05 |
| In-111 | 4.9E−02 | 4.9E+01 | 4.9E+04 |
| In-113m | 2.1E+00 | 2.1E+03 | 2.1E+06 |
| In-114m | 4.9E−03 | 4.9E+00 | 4.9E+03 |
| In-115 | 2.7E−04 | 2.7E−01 | 2.7E+02 |
| In-115m | 1.4E+00 | 1.4E+03 | 1.4E+06 |
| In-116m | 3.5E−01 | 3.5E+02 | 3.5E+05 |
| In-117 | 1.3E+00 | 1.3E+03 | 1.3E+06 |
| In-117m | 7.6E−02 | 7.6E+01 | 7.6E+04 |
| Ir-190 | 3.5E−03 | 3.5E+00 | 3.5E+03 |
| Ir-192 | 9.7E−04 | 9.7E−01 | 9.7E+02 |
| Ir-194 | 2.5E−01 | 2.5E+02 | 2.5E+05 |
| Ir-194m | 1.5E−04 | 1.5E−01 | 1.5E+02 |
| K-40 | 6.8E−05 | 6.8E−02 | 6.8E+01 |
| K-42 | 2.9E−01 | 2.9E+02 | 2.9E+05 |
| K-43 | 6.0E−02 | 6.0E+01 | 6.0E+04 |
| K-44 | 4.9E−01 | 4.9E+02 | 4.9E+05 |
| Kr-79 | 7.0E+00 | | |
| Kr-81 | 1.8E+02 | | |
| Kr-83m | 2.0E+04 | | |
| Kr-85 | 8.4E+02 | | |
| Kr-85m | 1.1E+01 | | |
| Kr-87 | 2.0E+00 | | |
| Kr-88 | 4.2E−01 | | |
| La-140 | 1.6E−02 | 1.6E+01 | 1.6E+04 |
| La-141 | 1.1E+00 | 1.1E+03 | 1.1E+06 |
| La-142 | 2.3E−01 | 2.3E+02 | 2.3E+05 |
| Lu-177 | 1.4E−01 | 1.4E+02 | 1.4E+05 |
| Lu-177m | 3.5E−04 | 3.5E−01 | 3.5E+02 |
| Mg-28 | 2.1E−02 | 2.1E+01 | 2.1E+04 |
| Mn-52 | 3.5E−03 | 3.5E+00 | 3.5E+03 |

| Radionuclide | Gaseous form* | Liquid/powder forms | Solid form* |
|---|---|---|---|
| Mn-52m | 5.2E−01 | 5.2E+02 | 5.2E+05 |
| Mn-53 | 5.7E−02 | 5.7E+01 | 5.7E+04 |
| Mn-54 | 2.5E−04 | 2.5E−01 | 2.5E+02 |
| Mn-56 | 2.5E−01 | 2.5E+02 | 2.5E+05 |
| Mo-93 | 1.5E−03 | 1.5E+00 | 1.5E+03 |
| Mo-99** | 5.7E−02 | 5.7E+01 | 5.7E+04 |
| Mo-101 | 8.4E−01 | 8.4E+02 | 8.4E+05 |
| Na-22 | 3.2E−05 | 3.2E−02 | 3.2E+01 |
| Na-24 | 2.6E−02 | 2.6E+01 | 2.6E+04 |
| Nb-90 | 2.5E−02 | 2.5E+01 | 2.5E+04 |
| Nb-93m | 1.2E−02 | 1.2E+01 | 1.2E+04 |
| Nb-94 | 6.0E−06 | 6.0E−03 | 6.0E+00 |
| Nb-95 | 2.3E−03 | 2.3E+00 | 2.3E+03 |
| Nb-95m | 2.0E−02 | 2.0E+01 | 2.0E+04 |
| Nb-96 | 2.5E−02 | 2.5E+01 | 2.5E+04 |
| Nb-97 | 1.0E+00 | 1.0E+03 | 1.0E+06 |
| Nd-147 | 3.0E−02 | 3.0E+01 | 3.0E+04 |
| Nd-149 | 1.1E+00 | 1.1E+03 | 1.1E+06 |
| Ni-56 | 2.0E−03 | 2.0E+00 | 2.0E+03 |
| Ni-57 | 2.1E−02 | 2.1E+01 | 2.1E+04 |
| Ni-59 | 2.2E−02 | 2.2E+01 | 2.2E+04 |
| Ni-63 | 1.4E−01 | 1.4E+02 | 1.4E+05 |
| Ni-65 | 7.0E−01 | 7.0E+02 | 7.0E+05 |
| Np-235 | 3.0E−02 | 3.0E+01 | 3.0E+04 |
| Np-237 | 1.8E−06 | 1.8E−03 | 1.8E+00 |
| Np-238 | 1.9E−02 | 1.9E+01 | 1.9E+04 |
| Np-239 | 1.0E−01 | 1.0E+02 | 1.0E+05 |
| Np-240 | 6.5E−01 | 6.5E+02 | 6.5E+05 |
| Np-240m | 4.7E+00 | 4.7E+03 | 4.7E+06 |
| Os-185 | 9.2E−04 | 9.2E−01 | 9.2E+02 |
| Os-191m | 9.0E−01 | 9.0E+02 | 9.0E+05 |
| Os-191 | 3.8E−02 | 3.8E+01 | 3.8E+04 |
| Os-193 | 2.9E−01 | 2.9E+02 | 2.9E+05 |
| P-32 | 1.7E−02 | 1.7E+01 | 1.7E+04 |
| P-33 | 1.2E−01 | 1.2E+02 | 1.2E+05 |
| Pa-230 | 6.3E−04 | 6.3E−01 | 6.3E+02 |
| Pa-231 | 8.3E−07 | 8.3E−04 | 8.3E−01 |
| Pa-233 | 9.3E−03 | 9.3E+00 | 9.3E+03 |
| Pa-234 | 9.3E−02 | 9.3E+01 | 9.3E+04 |
| Pb-203 | 8.3E−02 | 8.3E+01 | 8.3E+04 |
| Pb-205 | 1.2E−02 | 1.2E+01 | 1.2E+04 |
| Pb-209 | 1.1E+01 | 1.1E+04 | 1.1E+07 |
| Pb-210 | 5.5E−05 | 5.5E−02 | 5.5E+01 |
| Pb-211 | 1.2E−01 | 1.2E+02 | 1.2E+05 |

| Radionuclide | Gaseous form* | Liquid/powder forms | Solid form* |
|---|---|---|---|
| Pb-212 | 6.0E−03 | 6.0E+00 | 6.0E+03 |
| Pb-214 | 1.2E−01 | 1.2E+02 | 1.2E+05 |
| Pd-103 | 2.1E−01 | 2.1E+02 | 2.1E+05 |
| Pd-107 | 8.2E−02 | 8.2E+01 | 8.2E+04 |
| Pd-109 | 9.4E−01 | 9.4E+02 | 9.4E+05 |
| Pm-143 | 7.6E−04 | 7.6E−01 | 7.6E+02 |
| Pm-144 | 1.1E−04 | 1.1E−01 | 1.1E+02 |
| Pm-145 | 5.2E−04 | 5.2E−01 | 5.2E+02 |
| Pm-146 | 4.4E−05 | 4.4E−02 | 4.4E+01 |
| Pm-147 | 2.6E−02 | 2.6E+01 | 2.6E+04 |
| Pm-148 | 1.7E−02 | 1.7E+01 | 1.7E+04 |
| Pm-148m | 7.6E−04 | 7.6E−01 | 7.6E+02 |
| Pm-149 | 2.8E−01 | 2.8E+02 | 2.8E+05 |
| Pm-151 | 1.2E−01 | 1.2E+02 | 1.2E+05 |
| Po-210 | 9.3E−05 | 9.3E−02 | 9.3E+01 |
| Pr-142 | 2.8E−01 | 2.8E+02 | 2.8E+05 |
| Pr-143 | 1.0E−01 | 1.0E+02 | 1.0E+05 |
| Pr-144 | 1.5E+01 | 1.5E+04 | 1.5E+07 |
| Pt-191 | 6.4E−02 | 6.4E+01 | 6.4E+04 |
| Pt-193 | 2.1E−02 | 2.1E+01 | 2.1E+04 |
| Pt-193m | 4.8E−01 | 4.8E+02 | 4.8E+05 |
| Pt-195m | 1.4E−01 | 1.4E+02 | 1.4E+05 |
| Pt-197 | 1.1E+00 | 1.1E+03 | 1.1E+06 |
| Pt-197m | 3.6E+00 | 3.6E+03 | 3.6E+06 |
| Pu-236 | 7.0E−06 | 7.0E−03 | 7.0E+00 |
| Pu-237 | 2.3E−02 | 2.3E+01 | 2.3E+04 |
| Pu-238 | 2.7E−06 | 2.7E−03 | 2.7E+00 |
| Pu-239 | 2.5E−06 | 2.5E−03 | 2.5E+00 |
| Pu-240 | 2.5E−06 | 2.5E−03 | 2.5E+00 |
| Pu-241 | 1.3E−04 | 1.3E−01 | 1.3E+02 |
| Pu-242 | 2.5E−06 | 2.5E−03 | 2.5E+00 |
| Pu-243 | 3.8E+00 | 3.8E+03 | 3.8E+06 |
| Pu-244 | 2.4E−06 | 2.4E−03 | 2.4E+00 |
| Pu-245 | 2.1E−01 | 2.1E+02 | 2.1E+05 |
| Pu-246 | 4.8E−03 | 4.8E+00 | 4.8E+03 |
| Ra-223 | 1.3E−04 | 1.3E−01 | 1.3E+02 |
| Ra-224 | 3.2E−04 | 3.2E−01 | 3.2E+02 |
| Ra-225 | 1.3E−04 | 1.3E−01 | 1.3E+02 |
| Ra-226 | 5.5E−06 | 5.5E−03 | 5.5E+00 |
| Ra-228 | 1.3E−05 | 1.3E−02 | 1.3E+01 |
| Rb-81 | 4.2E−01 | 4.2E+02 | 4.2E+05 |
| Rb-83 | 1.4E−03 | 1.4E+00 | 1.4E+03 |
| Rb-84 | 2.0E−03 | 2.0E+00 | 2.0E+03 |
| Rb-86 | 1.7E−02 | 1.7E+01 | 1.7E+04 |

| Radionuclide | Gaseous form* | Liquid/powder forms | Solid form* |
|---|---|---|---|
| Rb-87 | 1.0E−02 | 1.0E+01 | 1.0E+04 |
| Rb-88 | 1.7E+00 | 1.7E+03 | 1.7E+06 |
| Rb-89 | 6.4E−01 | 6.4E+02 | 6.4E+05 |
| Re−184 | 1.8E−03 | 1.8E+00 | 1.8E+03 |
| Re-184m | 3.6E−04 | 3.6E−01 | 3.6E+02 |
| Re-186 | 1.9E−01 | 1.9E+02 | 1.9E+05 |
| Re-187 | 9.3E+00 | 9.3E+03 | 9.3E+06 |
| Re-188 | 3.7E−01 | 3.7E+02 | 3.7E+05 |
| Rh-103m | 1.7E+02 | 1.7E+05 | 1.7E+08 |
| Rh-105 | 3.4E−01 | 3.4E+02 | 3.4E+05 |
| Ru-97 | 8.3E−02 | 8.3E+01 | 8.3E+04 |
| Ru-103 | 3.1E−03 | 3.1E+00 | 3.1E+03 |
| Ru-105 | 2.9E−01 | 2.9E+02 | 2.9E+05 |
| Ru-106 | 5.9E−04 | 5.9E−01 | 5.9E+02 |
| S-35 | 7.5E−02 | 7.5E+01 | 7.5E+04 |
| Sb-117 | 2.0E+00 | 2.0E+03 | 2.0E+06 |
| Sb-122 | 3.9E−02 | 3.9E+01 | 3.9E+04 |
| Sb-124 | 6.0E−04 | 6.0E−01 | 6.0E+02 |
| Sb-125 | 1.4E−04 | 1.4E−01 | 1.4E+02 |
| Sb-126 | 1.8E−03 | 1.8E+00 | 1.8E+03 |
| Sb-126m | 7.6E−01 | 7.6E+02 | 7.6E+05 |
| Sb-127 | 2.0E−02 | 2.0E+01 | 2.0E+04 |
| Sb-129 | 1.8E−01 | 1.8E+02 | 1.8E+05 |
| Sc-44 | 1.4E−01 | 1.4E+02 | 1.4E+05 |
| Sc-46 | 4.0E−04 | 4.0E−01 | 4.0E+02 |
| Sc-47 | 1.1E−01 | 1.1E+02 | 1.1E+05 |
| Sc-48 | 1.1E−02 | 1.1E+01 | 1.1E+04 |
| Sc-49 | 1.0E+01 | 1.0E+04 | 1.0E+07 |
| Se-73 | 1.6E−01 | 1.6E+02 | 1.6E+05 |
| Se-75 | 1.1E−03 | 1.1E+00 | 1.1E+03 |
| Se-79 | 6.9E−03 | 6.9E+00 | 6.9E+03 |
| Si-31 | 4.7E+00 | 4.7E+03 | 4.7E+06 |
| Si-32 | 7.2E−04 | 7.2E−01 | 7.2E+02 |
| Sm-147 | 1.4E−05 | 1.4E−02 | 1.4E+01 |
| Sm-151 | 3.5E−02 | 3.5E+01 | 3.5E+04 |
| Sm-153 | 2.4E−01 | 2.4E+02 | 2.4E+05 |
| Sn-113 | 1.9E−03 | 1.9E+00 | 1.9E+03 |
| Sn-117m | 2.3E−02 | 2.3E+01 | 2.3E+04 |
| Sn-119m | 2.8E−02 | 2.8E+01 | 2.8E+04 |
| Sn-123 | 1.8E−02 | 1.8E+01 | 1.8E+04 |
| Sn-125 | 7.2E−03 | 7.2E+00 | 7.2E+03 |
| Sn-126 | 4.7E−06 | 4.7E−03 | 4.7E+00 |
| Sr-82 | 1.9E−03 | 1.9E+00 | 1.9E+03 |
| Sr-85 | 1.9E−03 | 1.9E+00 | 1.9E+03 |

| Radionuclide | Gaseous form* | Liquid/powder forms | Solid form* |
|---|---|---|---|
| Sr-85m | 1.5E+00 | 1.5E+03 | 1.5E+06 |
| Sr-87m | 1.2E+00 | 1.2E+03 | 1.2E+06 |
| Sr-89 | 2.1E−02 | 2.1E+01 | 2.1E+04 |
| Sr-90 | 5.2E−04 | 5.2E−01 | 5.2E+02 |
| Sr-91 | 1.2E−01 | 1.2E+02 | 1.2E+05 |
| Sr-92 | 2.5E−01 | 2.5E+02 | 2.5E+05 |
| Ta-182 | 4.4E−04 | 4.4E−01 | 4.4E+02 |
| Tb-157 | 2.2E−03 | 2.2E+00 | 2.2E+03 |
| Tb-160 | 8.4E−04 | 8.4E−01 | 8.4E+02 |
| Tc-95 | 9.0E−02 | 9.0E+01 | 9.0E+04 |
| Tc-95m | 1.4E−03 | 1.4E+00 | 1.4E+03 |
| Tc-96 | 5.6E−03 | 5.6E+00 | 5.6E+03 |
| Tc-96m | 7.0E−01 | 7.0E+02 | 7.0E+05 |
| Tc-97 | 1.5E−03 | 1.5E+00 | 1.5E+03 |
| Tc-97m | 7.2E−02 | 7.2E+01 | 7.2E+04 |
| Tc-98 | 6.4E−06 | 6.4E−03 | 6.4E+00 |
| Tc-99 | 9.0E−03 | 9.0E+00 | 9.0E+03 |
| Tc-99m | 1.4E+00 | 1.4E+03 | 1.4E+06 |
| Tc-101 | 3.8E+00 | 3.8E+03 | 3.8E+06 |
| Te-121 | 6.0E−03 | 6.0E+00 | 6.0E+03 |
| Te-121m | 5.3E−04 | 5.3E−01 | 5.3E+02 |
| Te-123 | 1.2E−03 | 1.2E+00 | 1.2E+03 |
| Te-123m | 2.7E−03 | 2.7E+00 | 2.7E+03 |
| Te-125m | 1.5E−02 | 1.5E+01 | 1.5E+04 |
| Te-127 | 2.9E+00 | 2.9E+03 | 2.9E+06 |
| Te-127m | 7.3E−03 | 7.3E+00 | 7.3E+03 |
| Te-129 | 6.5E+00 | 6.5E+03 | 6.5E+06 |
| Te-129m | 6.1E−03 | 6.1E+00 | 6.1E+03 |
| Te-131 | 9.4E−01 | 9.4E+02 | 9.4E+05 |
| Te-131m | 1.8E−02 | 1.8E+01 | 1.8E+04 |
| Te-132 | 6.2E−03 | 6.2E+00 | 6.2E+03 |
| Te-133 | 1.2E+00 | 1.2E+03 | 1.2E+06 |
| Te-133m | 2.9E−01 | 2.9E+02 | 2.9E+05 |
| Te-134 | 4.4E−01 | 4.4E+02 | 4.4E+05 |
| Th-226 | 3.0E−02 | 3.0E+01 | 3.0E+04 |
| Th-227 | 6.4E−05 | 6.4E−02 | 6.4E+01 |
| Th-228 | 2.9E−06 | 2.9E−03 | 2.9E+00 |
| Th-229 | 4.9E−07 | 4.9E−04 | 4.9E−01 |
| Th-230 | 3.2E−06 | 3.2E−03 | 3.2E+00 |
| Th-231 | 8.4E−01 | 8.4E+02 | 8.4E+05 |
| Th-232 | 6.0E−07 | 6.0E−04 | 6.0E−01 |
| Th-234 | 2.0E−02 | 2.0E+01 | 2.0E+04 |
| Ti-44 | 5.2E−06 | 5.2E−03 | 5.2E+00 |
| Ti-45 | 4.0E−01 | 4.0E+02 | 4.0E+05 |

| Radionuclide | Gaseous form* | Liquid/powder forms | Solid form* |
|---|---|---|---|
| Tl-200 | 4.4E−02 | 4.4E+01 | 4.4E+04 |
| Tl-201 | 1.8E−01 | 1.8E+02 | 1.8E+05 |
| Tl-202 | 1.0E−02 | 1.0E+01 | 1.0E+04 |
| Tl-204 | 2.5E−02 | 2.5E+01 | 2.5E+04 |
| Tm-170 | 2.4E−02 | 2.4E+01 | 2.4E+04 |
| Tm-171 | 5.9E−02 | 5.9E+01 | 5.9E+04 |
| U-230 | 5.0E−05 | 5.0E−02 | 5.0E+01 |
| U-231 | 1.4E−01 | 1.4E+02 | 1.4E+05 |
| U-232 | 1.3E−06 | 1.3E−03 | 1.3E+00 |
| U-233 | 7.6E−06 | 7.6E−03 | 7.6E+00 |
| U-234 | 7.6E−06 | 7.6E−03 | 7.6E+00 |
| U-235 | 7.0E−06 | 7.0E−03 | 7.0E+00 |
| U-236 | 8.4E−06 | 8.4E−03 | 8.4E+00 |
| U-237 | 4.7E−02 | 4.7E+01 | 4.7E+04 |
| U-238 | 8.6E−06 | 8.6E−03 | 8.6E+00 |
| U-239 | 8.3E+00 | 8.3E+03 | 8.3E+06 |
| U-240 | 1.8E−01 | 1.8E+02 | 1.8E+05 |
| V-48 | 1.4E−03 | 1.4E+00 | 1.4E+03 |
| V-49 | 1.3E+00 | 1.3E+03 | 1.3E+06 |
| W-181 | 1.1E−02 | 1.1E+01 | 1.1E+04 |
| W-185 | 1.6E−01 | 1.6E+02 | 1.6E+05 |
| W-187 | 1.1E−01 | 1.1E+02 | 1.1E+05 |
| W-188 | 1.0E−02 | 1.0E+01 | 1.0E+04 |
| Xe-122 | 7.6E−02 | 7.6E+01 | 7.6E+04 |
| Xe-123 | 1.6E+00 | 1.6E+03 | 1.6E+06 |
| Xe-125 | 6.0E−01 | | |
| Xe-127 | 7.0E+00 | | |
| Xe-129m | 7.6E+01 | | |
| Xe-131m | 2.2E+02 | | |
| Xe-133 | 5.2E+01 | | |
| Xe-133m | 6.0E+01 | | |
| Xe-135 | 7.6E+00 | | |
| Xe-135m | 4.2E+00 | | |
| Xe-138 | 9.9E−01 | | |
| Y-86 | 2.8E−02 | 2.8E+01 | 2.8E+04 |
| Y-87 | 2.3E−02 | 2.3E+01 | 2.3E+04 |
| Y-88 | 2.5E−04 | 2.5E−01 | 2.5E+02 |
| Y-90 | 1.1E−01 | 1.1E+02 | 1.1E+05 |
| Y-90m | 4.3E−01 | 4.3E+02 | 4.3E+05 |
| Y-91 | 1.8E−02 | 1.8E+01 | 1.8E+04 |
| Y-91m | 1.6E+00 | 1.6E+03 | 1.6E+06 |
| Y-92 | 7.0E−01 | 7.0E+02 | 7.0E+05 |
| Y-93 | 3.8E−01 | 3.8E+02 | 3.8E+05 |
| Yb-169 | 5.5E−03 | 5.5E+00 | 5.5E+03 |

| Radionuclide | Gaseous form* | Liquid/powder forms | Solid form* |
|---|---|---|---|
| Yb-175 | 2.1E−01 | 2.1E+02 | 2.1E+05 |
| Zn-62 | 8.6E−02 | 8.6E+01 | 8.6E+04 |
| Zn-65 | 4.4E−04 | 4.4E−01 | 4.4E+02 |
| Zn-69 | 2.7E+01 | 2.7E+04 | 2.7E+07 |
| Zn-69m | 2.0E−01 | 2.0E+02 | 2.0E+05 |
| Zr-86 | 2.4E−02 | 2.4E+01 | 2.4E+04 |
| Zr-88 | 2.7E−04 | 2.7E−01 | 2.7E+02 |
| Zr-89 | 1.6E−02 | 1.6E+01 | 1.6E+04 |
| Zr-93 | 2.8E−03 | 2.8E+00 | 2.8E+03 |
| Zr-95 | 6.4E−04 | 6.4E−01 | 6.4E+02 |
| Zr-97 | 4.6E−02 | 4.6E+01 | 4.6E+04 |

*Radionuclides boiling at 100 °C or less, or exposed to a temperature of 100 °C, must be considered a gas. Capsules containing radionuclides in liquid or powder form can be considered to be solids.

**Mo-99 contained in a generator to produce Technetium-99 can be assumed to be a solid.

*3. Table of Concentration Levels*

(a) Table 2 may be used for determining if facilities are in compliance with the standard.

1. The concentration table as applied to emission estimates can only be used if all releases are from point sources and concentrations have been measured at the stack or vent using EPA-approved methods, and the distance between each stack or vent and the nearest resident is greater than 3 times the diameter of the stack or vent. Procedures provided in Ref. (1) shall be used to determine compliance or exemption from reporting by use of Table 2.

2. The concentration table may be used to determine compliance with the standard based on environmental measurements provided these measurements are made in conformance with the requirements of § 61.107(b)(5).

*4. NCRP Screening Model*

The procedures described in Reference (4) may be used to determine doses to members of the general public from emissions of radionuclides to the atmosphere. Both the total dose from all radionuclides emitted, and the dose caused by radioactive iodine must be considered in accordance with the procedures in Ref. (1).

*5. The COMPLY Computer Code*

The COMPLY computer code may be used to determine compliance with subpart I. The compliance model in the COMPLY computer code may be used to determine the dose to members of the general public from emissions of radionuclides to the atmosphere. The EPA may add radionuclides to all or any part of COMPLY to cover radionuclides that may be used by the regulated community.

Table 2—Concentration Levels for Environmental Compliance

| Radionuclide | Concentration (Ci/m$^3$) | Radionuclide | Concentration (Ci/m$^3$) |
|---|---|---|---|
| Ac-225 | 9.1E−14 | Bi-207 | 1.0E−14 |
| Ac-227 | 1.6E−16 | Bi-210 | 2.9E−13 |
| Ac-228 | 3.7E−12 | Bi-212 | 5.6E−11 |
| Ag-106 | 1.9E−09 | Bi-213 | 7.1E−11 |

| Radionuclide | Concentration (Ci/m$^3$) | Radionuclide | Concentration (Ci/m$^3$) |
|---|---|---|---|
| Ag-106m | 1.2E−12 | Bi-214 | 1.4E−10 |
| Ag-108m | 7.1E−15 | Bk-249 | 5.6E−13 |
| Ag-110m | 9.1E−14 | Bk-250 | 9.1E−11 |
| Ag-111 | 2.5E−12 | Br-77 | 4.2E−11 |
| Al-26 | 4.8E−15 | Br-80 | 1.4E−08 |
| Am-241 | 1.9E−15 | Br-80m | 1.8E−09 |
| Am-242 | 1.5E−11 | Br-82 | 1.2E−11 |
| Am-242m | 2.0E−15 | Br-83 | 1.2E−08 |
| Am-243 | 1.8E−15 | Br-84 | 6.7E−10 |
| Am-244 | 4.0E−11 | C-11 | 1.5E−09 |
| Am-245 | 8.3E−09 | C-14 | 1.0E−11 |
| Am-246 | 1.2E−09 | Ca-41 | 4.2E−13 |
| Ar-37 | 1.6E−03 | Ca-45 | 1.3E−12 |
| Ar-41 | 1.7E−09 | Ca-47 | 2.4E−12 |
| As-72 | 2.4E−11 | Cd-109 | 5.9E−13 |
| As-73 | 1.1E−11 | Cd-113 | 9.1E−15 |
| As-74 | 2.2E−12 | Cd-113m | 1.7E−14 |
| As-76 | 5.0E−11 | Cd-115 | 1.6E−11 |
| As-77 | 1.6E−10 | Cd-115m | 8.3E−13 |
| At-211 | 1.1E−11 | Cd-117 | 6.7E−11 |
| Au-193 | 3.8E−10 | Cd-117m | 1.6E−10 |
| Au-194 | 3.2E−11 | Ce-139 | 2.6E−12 |
| Au-195 | 3.1E−12 | Ce-141 | 6.3E−12 |
| Au-198 | 2.1E−11 | Ce-143 | 3.0E−11 |
| Au-199 | 4.8E−11 | Ce-144 | 6.2E−13 |
| Ba-131 | 7.1E−12 | Cf-248 | 1.8E−14 |
| Ba-133 | 5.9E−14 | Cf-249 | 1.4E−15 |
| Ba-133m | 5.9E−11 | Cf-250 | 3.2E−15 |
| Ba-135m | 1.8E−10 | Cf-251 | 1.4E−15 |
| Ba-139 | 5.6E−09 | Cf-252 | 5.6E−15 |
| Ba-140 | 1.3E−12 | Cf-253 | 3.1E−13 |
| Ba-141 | 1.4E−09 | Cf-254 | 3.0E−15 |
| Ba-142 | 1.3E−09 | Cl-36 | 2.7E−15 |
| Be-7 | 2.3E−11 | Cl-38 | 7.7E−10 |
| Be-10 | 1.6E−12 | Cm-242 | 5.3E−14 |
| Bi-206 | 2.3E−12 | Cm-243 | 2.6E−15 |
| Cm-244 | 3.3E−15 | Eu-156 | 1.9E−12 |
| Cm-245 | 1.8E−15 | F-18 | 6.7E−10 |
| Cm-246 | 1.9E−15 | Fe-52 | 5.6E−11 |
| Cm-247 | 1.9E−15 | Fe-55 | 9.1E−12 |
| Cm-248 | 5.0E−16 | Fe-59 | 6.7E−13 |
| Cm-249 | 3.7E−09 | Fm-254 | 2.0E−11 |
| Cm-250 | 9.1E−17 | Fm-255 | 4.3E−12 |
| Co-56 | 1.8E−13 | Fr-223 | 3.3E−11 |

| Radionuclide | Concentration (Ci/m$^3$) | Radionuclide | Concentration (Ci/m$^3$) |
|---|---|---|---|
| Co-57 | 1.3E−12 | Ga-66 | 6.2E−11 |
| Co-58 | 6.7E−13 | Ga-67 | 7.1E−11 |
| Co-58m | 1.2E−10 | Ga-68 | 9.1E−10 |
| Co-60 | 1.7E−14 | Ga-72 | 3.8E−11 |
| Co-60m | .4.3E−09 | Gd-152 | 5.0E−15 |
| Co-61 | 4.5E−09 | Gd-153 | 2.1E−12 |
| Cr-49 | 1.1E−09 | Gd-159 | 2.9E−10 |
| Cr-51 | 3.1E−11 | Ge-68 | 2.0E−13 |
| Cs-129 | 1.4E−10 | Ge-71 | 2.4E−10 |
| Cs-131 | 3.3E−11 | Ge-77 | 1.0E−10 |
| Cs-132 | 4.8E−12 | H-3 | 1.5E−09 |
| Cs-134 | 2.7E−14 | Hf-181 | 1.9E−12 |
| Cs-134m | 1.7E−10 | Hg-193m | 1.0E−10 |
| Cs-135 | 4.0E−13 | Hg-197 | 8.3E−11 |
| Cs-136 | 5.3E−13 | Hg-197m | 1.1E−10 |
| Cs-137 | 1.9E−14 | Hg-203 | 1.0E−12 |
| Cs-138 | 5.3E−10 | Ho-166 | 7.1E−11 |
| Cu-61 | 4.8E−10 | Ho-166m | 7.1E−15 |
| Cu-64 | 5.3E−10 | I-123 | 4.3E−10 |
| Cu-67 | 5.0E−11 | I-124 | 6.2E−13 |
| Dy-157 | 5.0E−10 | I-125 | 1.2E−13 |
| Dy-165 | 6.7E−09 | I-126 | 1.1E−13 |
| Dy-166 | 1.1E−11 | I-128 | 1.1E−08 |
| Er-169 | 2.9E−11 | I-129 | 9.1E−15 |
| Er-171 | 4.0E−10 | I-130 | 4.5E−11 |
| Es-253 | 2.4E−13 | I-131 | 2.1E−13 |
| Es-254 | 2.0E−14 | I-132 | 2.3E−10 |
| Es-254m | 1.8E−12 | I-133 | 2.0E−11 |
| Eu-152 | 2.0E−14 | I-134 | 3.8E−10 |
| Eu-152m | 3.6E−10 | I-135 | 1.2E−10 |
| Eu-154 | 2.3E−14 | In-111 | 3.6E−11 |
| Eu-155 | 5.9E−13 | In-113m | 2.5E−09 |
| In-114m | 9.1E−13 | Nb-95 | 2.2E−12 |
| In-115 | 7.1E−14 | Nb-95m | 1.4E−11 |
| In-115m | 1.6E−09 | Nb-96 | 2.4E−11 |
| In-116m | 4.2E−10 | Nb-97 | 1.2E−09 |
| In-117 | 1.6E−09 | Nd-147 | 7.7E−12 |
| In-117m | 9.1E−11 | Nd-149 | 7.1E−10 |
| Ir-190 | 2.6E−12 | Ni-56 | 1.7E−12 |
| Ir-192 | 9.1E−13 | Ni-57 | 1.8E−11 |
| Ir-194 | 1.1E−10 | Ni-59 | 1.5E−11 |
| Ir-194m | 1.7E−13 | Ni-63 | 1.4E−11 |
| K-40 | 2.7E−14 | Ni-65 | 8.3E−10 |
| K-42 | 2.6E−10 | Np-235 | 2.5E−11 |

| Radionuclide | Concentration (Ci/m$^3$) | Radionuclide | Concentration (Ci/m$^3$) |
|---|---|---|---|
| K-43 | 6.2E−11 | Np-237 | 1.2E−15 |
| K-44 | 5.9E−10 | Np-238 | 1.4E−11 |
| Kr-79 | 8.3E−09 | Np-239 | 3.8E−11 |
| Kr-81 | 2.1E−07 | Np-240 | 7.7E−10 |
| Kr-83m | 2.3E−05 | Np-240m | 5.6E−09 |
| Kr-85 | 1.0E−06 | Os-185 | 1.0E−12 |
| Kr-85m | 1.3E−08 | Os-191m | 2.9E−10 |
| Kr-87 | 2.4E−09 | Os-191 | 1.1E−11 |
| Kr-88 | 5.0E−10 | Os-193 | 9.1E−11 |
| La-140 | 1.2E−11 | P-32 | 3.3E−13 |
| La-141 | 7.7E−10 | P-33 | 2.4E−12 |
| La-142 | 2.7E−10 | Pa-230 | 3.2E−13 |
| Lu-177 | 2.4E−11 | Pa-231 | 5.9E−16 |
| Lu-177m | 3.6E−13 | Pa-233 | 4.8E−12 |
| Mg-28 | 1.5E−11 | Pa-234 | 1.1E−10 |
| Mn-52 | 2.8E−12 | Pb-203 | 6.2E−11 |
| Mn-52m | 6.2E−10 | Pb-205 | 5.6E−12 |
| Mn-53 | 1.5E−11 | Pb-209 | 1.3E−08 |
| Mn-54 | 2.8E−13 | Pb-2I0 | 2.8E−15 |
| Mn-56 | 2.9E−10 | Pb-211 | 1.4E−10 |
| Mo-93 | 1.1E−12 | Pb-212 | 6.3E−12 |
| Mo-99 | 1.4E−11 | Pb-214 | 1.2E−10 |
| Mo-101 | 1.0E−09 | Pd-103 | 3.8E−11 |
| Na-22 | 2.6E−14 | Pd-107 | 3.1E−11 |
| Na-24 | 2.6E−11 | Pd-109 | 4.8E−10 |
| Nb-90 | 2.6E−11 | Pm-143 | 9.1E−13 |
| Nb-93m | 1.0E−11 | Pm-144 | 1.3E−13 |
| Nb-94 | 7.1E−15 | Pm-145 | 6.2E−13 |
| Pm-146 | 5.3E−14 | Re-184m | 3.7E−13 |
| Pm-147 | 1.1E−11 | Re-186 | 1.8E−11 |
| Pm-148 | 5.0E−12 | Re-187 | 2.6E−10 |
| Pm-148m | 6.7E−13 | Re-188 | 1.7E−10 |
| Pm-149 | 4.2E−11 | Rh-103m | 2.1E−07 |
| Pm-151 | 7.1E−11 | Rh-105 | 1.3E−10 |
| Po-210 | 7.1E−15 | Ru-97 | 6.7E−11 |
| Pr-142 | 1.1E−10 | Ru-103 | 2.6E−12 |
| Pr-143 | 7.1E−12 | Ru-105 | 2.8E−10 |
| Pr-144 | 1.8E−08 | Ru-106 | 3.4E−13 |
| Pt-191 | 4.3E−11 | S-35 | 1.3E−12 |
| Pt-193 | 1.8E−11 | Sb-117 | 2.4E−09 |
| Pt-193m | 4.8E−11 | Sb-122 | 1.4E−11 |
| Pt-195m | 3.2E−11 | Sb-124 | 5.3E−13 |
| Pt-197 | 4.0E−10 | Sb-125 | 1.6E−13 |
| Pt-197m | 2.6E−09 | Sb-126 | 1.4E−12 |

| Radionuclide | Concentration (Ci/m$^3$) | Radionuclide | Concentration (Ci/m$^3$) |
|---|---|---|---|
| Pu-236 | 5.9E−15 | Sb-126m | 9.1E−10 |
| Pu-237 | 1.9E−11 | Sb-127 | 7.1E−12 |
| Pu-238 | 2.1E−15 | Sb-129 | 7.7E−11 |
| Pu-239 | 2.0E−15 | Sc-44 | 1.7E−10 |
| Pu-240 | 2.0E−15 | Sc-46 | 4.2E−13 |
| Pu-241 | 1.0E−13 | Sc-47 | 3.8E−11 |
| Pu-242 | 2.0E−15 | Sc-48 | 9.1E−12 |
| Pu-243 | 4.2E−09 | Sc-49 | 1.2E−08 |
| Pu-244 | 2.0E−15 | Se-73 | 1.7E−10 |
| Pu-245 | 2.1E−10 | Se-75 | 1.7E−13 |
| Pu-246 | 2.2E−12 | Se-79 | 1.1E−13 |
| Ra-223 | 4.2E−14 | Si-31 | 5.6E−09 |
| Ra-224 | 1.5E−13 | Si-32 | 3.4E−14 |
| Ra-225 | 5.0E−14 | Sm-147 | 1.4E−14 |
| Ra-226 | 3.3E−15 | Sm-151 | 2.1E−11 |
| Ra-228 | 5.9E−15 | Sm-153 | 5.9E−11 |
| Rb-81 | 5.0E−10 | Sn-113 | 1.4E−12 |
| Rb-83 | 3.4E−13 | Sn-117m | 5.6E−12 |
| Rb-84 | 3.6E−13 | Sn-119m | 5.3E−12 |
| Rb-86 | 5.6E−13 | Sn-123 | 1.1E−12 |
| Rb-87 | 1.6E−13 | Sn-125 | 1.7E−12 |
| Rb-88 | 2.1E−09 | Sn-126 | 5.3E−15 |
| Rb-89 | 7.1E−10 | Sr-82 | 6.2E−13 |
| Re-184 | 1.5E−12 | Sr-85 | 1.8E−12 |
| Sr-85m | 1.6E−09 | Th-232 | 6.2E−16 |
| Sr-87m | 1.4E−09 | Th-234 | 2.2E−12 |
| Sr-89 | 1.8E−12 | Ti-44 | 6.2E−15 |
| Sr-90 | 1.9E−14 | Ti-45 | 4.8E−10 |
| Sr-91 | 9.1E−11 | Tl-200 | 4.5E−11 |
| Sr-92 | 2.9E−10 | Tl-201 | 1.0E−10 |
| Ta-182 | 4.5E−13 | Tl-202 | 5.0E−12 |
| Tb-157 | 2.5E−12 | Tl-204 | 1.2E−12 |
| Tb-160 | 7.7E−13 | Tm-170 | 3.3E−12 |
| Tc-95 | 1.0E−10 | Tm-171 | 2.6E−11 |
| Tc-95m | 1.4E−12 | U-230 | 1.5E−14 |
| Tc-96 | 5.6E−12 | U-231 | 4.2E−11 |
| Tc-96m | 6.7E−10 | U-232 | 1.3E−15 |
| Tc-97 | .7.1E−13 | U-233 | 7.1E−15 |
| Tc-97m | 7.1E−12 | U-234 | 7.7E−15 |
| Tc-98 | 6.7E−15 | U-235 | 7.1E−15 |
| Tc-99 | 1.4E−13 | U-236 | 7.7E−15 |
| Tc-99m | 1.7E−09 | U-237 | 1.0E−11 |
| Tc-101 | 4.5E−09 | U-238 | 8.3E−15 |
| Te-121 | 1.0E−12 | U-239 | 4.3E−09 |

| Radionuclide | Concentration (Ci/m$^3$) | Radionuclide | Concentration (Ci/m$^3$) |
|---|---|---|---|
| Te-121m | 1.2E−13 | U-240 | 1.3E−10 |
| Te-123 | 1.4E−13 | V-48 | 1.0E−12 |
| Te-123m | 2.0E−13 | V-49 | 1.6E−10 |
| Te-125m | 3.6E−13 | W-181 | 6.7E−12 |
| Te-127 | 1.0E−09 | W-185 | 2.6E−12 |
| Te-127m | 1.5E−13 | W-187 | 7.7E−11 |
| Te-129 | 7.7E−09 | W-188 | 5.3E−13 |
| Te-129m | 1.4E−13 | Xe-122 | 9.1E−11 |
| Te-131 | 9.1E−11 | Xe-123 | 1.6E−09 |
| Te-131m | 1.0E−12 | Xe-125 | 1.1E−11 |
| Te-132 | 7.1E−13 | Xe-127 | 8.3E−09 |
| Te-133 | 9.1E−10 | Xe-129m | 9.1E−08 |
| Te-133m | 2.2E−10 | Xe-131m | 2.6E−07 |
| Te-134 | 5.3E−10 | Xe-133 | 6.2E−08 |
| Th-226 | 3.4E−11 | Xe-133m | 7.1E−08 |
| Th-227 | 3.8E−14 | Xe-135 | 9.1E−09 |
| Th-228 | 3.1E−15 | Xe-135m | 5.0E−09 |
| Th-229 | 5.3E−16 | Xe-138 | 1.2E−09 |
| Th-230 | 3.4E−15 | Y-86 | 3.0E−11 |
| Th-231 | 2.9E−10 | Y-87 | 1.7E−11 |
| Y-88 | 2.7E−13 | Zn-65 | 9.1E−14 |
| Y-90 | 1.3E−11 | Zn-69 | 3.2E−08 |
| Y-90m | 1.9E−10 | Zn-69m | 1.7E−10 |
| Y-91 | 2.1E−12 | Zr-86 | 2.4E−11 |
| Y-91m | 1.3E−09 | Zr-88 | 3.1E−13 |
| Y-92 | 8.3E−10 | Zr-89 | 1.3E−11 |
| Y-93 | 2.9E−10 | Zr-93 | 2.6E−12 |
| Yb-169 | 3.7E−12 | Zr-95 | 6.7E−13 |
| Yb-175 | 4.3E−11 | Zr-97 | 3.8E−11 |
| Zn-62 | 9.1E−11 | | |

*6. References*

(1) Environmental Protection Agency, “A Guide for Determining Compliance with the Clean Air Act Standards for Radionuclides Emissions from NRC-Licensed and Non-DOE Federal Facilities”, EPA 520/1-89-002, October 1989.

(2) Environmental Protection Agency, “User's Guide for the COMPLY Code”, EPA 520/1-89-003, October 1989.

(3) Environmental Protection Agency, “Background Information Document: Procedures Approved for Demonstrating Compliance with 40 CFR Part 61, Subpart I”, EPA 520/1-89-001, January 1989.

(4) National Council on Radiation Protection and Measurement, “Screening Techniques for Determining Compliance with Environmental Standards” NCRP Commentary No. 3, Revision of January 1989 with addendum of October, 1989.

[54 FR 51711, Dec. 15, 1989]

**Attachment L**
**To Part 70 Operating Permit Renewal No. T129-25424-00003**

[Downloaded from the eCFR on May 20, 2013]

**Electronic Code of Federal Regulations**

**Title 40: Protection of Environment**

**40 CFR 60, Subpart Ja—Standards of Performance for Petroleum Refineries for Which Construction, Reconstruction, or Modification Commenced After May 14, 2007**

Source: 73 FR 35867, June 24, 2008, unless otherwise noted.

**§ 60.100a Applicability, designation of affected facility, and reconstruction.**

(a) The provisions of this subpart apply to the following affected facilities in petroleum refineries: fluid catalytic cracking units (FCCU), fluid coking units (FCU), delayed coking units, fuel gas combustion devices (including process heaters), flares and sulfur recovery plants. The sulfur recovery plant need not be physically located within the boundaries of a petroleum refinery to be an affected facility, provided it processes gases produced within a petroleum refinery.

(b) Except for flares and delayed coking units, the provisions of this subpart apply only to affected facilities under paragraph (a) of this section which commence construction, modification or reconstruction after May 14, 2007. For flares, the provisions of this subpart apply only to flares which commence construction, modification or reconstruction after June 24, 2008. For the purposes of this subpart, a modification to a flare commences when a project that includes any of the activities in paragraphs (c)(1) or (2) of this section is commenced. For delayed coking units, the provisions of this subpart apply to delayed coking units that commence construction, reconstruction or modification on the earliest of the following dates:

(1) May 14, 2007, for such activities that involve a “delayed coking unit” defined as follows: one or more refinery process units in which high molecular weight petroleum derivatives are thermally cracked and petroleum coke is produced in a series of closed, batch system reactors;

(2) December 22, 2008, for such activities that involve a “delayed coking unit” defined as follows: a refinery process unit in which high molecular weight petroleum derivatives are thermally cracked and petroleum coke is produced in a series of closed, batch system reactors. A delayed coking unit consists of the coke drums and associated fractionator;

(3) September 12, 2012, for such activities that involve a “delayed coking unit” as defined in § 60.101a.

(c) For all affected facilities other than flares, the provisions in § 60.14 regarding modification apply. As provided in § 60.14(f), the special provisions set forth under this subpart shall supersede the provisions in § 60.14 with respect to flares. For the purposes of this subpart, a modification to a flare occurs as provided in paragraphs (c)(1) or (2) of this section.

(1) Any new piping from a refinery process unit, including ancillary equipment, or a fuel gas system is physically connected to the flare ( *e.g.,* for direct emergency relief or some form of continuous or intermittent venting). However, the connections described in paragraphs (c)(1)(i) through (vii) of this section are not considered modifications of a flare.

(i) Connections made to install monitoring systems to the flare.

(ii) Connections made to install a flare gas recovery system or connections made to upgrade or enhance components of a flare gas recovery system ( *e.g.,* addition of compressors or recycle lines).

(iii) Connections made to replace or upgrade existing pressure relief or safety valves, provided the new pressure relief or safety valve has a set point opening pressure no lower and an internal diameter no greater than the existing equipment being replaced or upgraded.

(iv) Connections made for flare gas sulfur removal.

(v) Connections made to install back-up (redundant) equipment associated with the flare (such as a back-up compressor) that does not increase the capacity of the flare.

(vi) Replacing piping or moving an existing connection from a refinery process unit to a new location in the same flare, provided the new pipe diameter is less than or equal to the diameter of the pipe/connection being replaced/moved.

(vii) Connections that interconnect two or more flares.

(2) A flare is physically altered to increase the flow capacity of the flare.

(d) For purposes of this subpart, under § 60.15, the “fixed capital cost of the new components” includes the fixed capital cost of all depreciable components which are or will be replaced pursuant to all continuous programs of component replacement which are commenced within any 2-year period following the relevant applicability date specified in paragraph (b) of this section.

[73 FR 35867, June 24, 2008, as amended at 77 FR 56464, Sep. 12, 2012]

**§ 60.101a Definitions.**

Terms used in this subpart are defined in the Clean Air Act (CAA), in § 60.2 and in this section.

*Air preheat* means a device used to heat the air supplied to a process heater generally by use of a heat exchanger to recover the sensible heat of exhaust gas from the process heater.

*Ancillary equipment* means equipment used in conjunction with or that serve a refinery process unit. *Ancillary equipment* includes, but is not limited to, storage tanks, product loading operations, wastewater treatment systems, steam- or electricity-producing units (including coke gasification units), pressure relief valves, pumps, sampling vents and continuous analyzer vents.

*Cascaded flare system* means a series of flares connected to one flare gas header system arranged with increasing pressure set points so that discharges will be initially directed to the first flare in the series ( *i.e.,* the primary flare). If the discharge pressure exceeds a set point at which the flow to the primary flare would exceed the primary flare's capacity, flow will be diverted to the second flare in the series. Similarly, flow would be diverted to a third (or fourth) flare if the pressure in the flare gas header system exceeds a threshold where the flow to the first two (or three) flares would exceed their capacities.

*Co-fired process heater* means a process heater that employs burners that are designed to be supplied by both gaseous and liquid fuels on a routine basis. Process heaters that have gas burners with emergency oil back-up burners are not considered co-fired process heaters.

*Coke burn-off* means the coke removed from the surface of the FCCU catalyst by combustion in the catalyst regenerator. The rate of coke burn-off is calculated by the formula specified in § 60.104a.

*Contact material* means any substance formulated to remove metals, sulfur, nitrogen, or any other contaminant from petroleum derivatives.

*Delayed coking unit* means one or more refinery process units in which high molecular weight petroleum derivatives are thermally cracked and petroleum coke is produced in a series of closed, batch system reactors.

*Corrective action* means the design, operation and maintenance changes that one takes consistent with good engineering practice to reduce or eliminate the likelihood of the recurrence of the primary cause and any other contributing cause(s) of an event identified by a root cause analysis as having resulted in a discharge of gases to an affected flare in excess of specified thresholds.

*Corrective action analysis* means a description of all reasonable interim and long-term measures, if any, that are available, and an explanation of why the selected corrective action(s) is/are the best alternative(s), including, but not limited to, considerations of cost effectiveness, technical feasibility, safety and secondary impacts.

*Delayed coking unit* means a refinery process unit in which high molecular weight petroleum derivatives are thermally cracked and petroleum coke is produced in a series of closed, batch system reactors. A *delayed coking unit* includes, but is not limited to, all of the coke drums associated with a single fractionator; the fractionator, including the bottoms receiver and the overhead condenser; the coke drum cutting water and quench system, including the jet pump and coker quench water tank; process piping and associated equipment such as pumps, valves and connectors; and the coke drum blowdown recovery compressor system.

*Emergency flare* means a flare that combusts gas exclusively released as a result of malfunctions (and not startup, shutdown, routine operations or any other cause) on four or fewer occasions in a rolling 365-day period. For purposes of this rule, a flare cannot be categorized as an *emergency flare* unless it maintains a water seal.

*Flare* means a combustion device that uses an uncontrolled volume of air to burn gases. The *flare* includes the foundation, flare tip, structural support, burner, igniter, flare controls, including air injection or steam injection systems, flame arrestors and the flare gas header system. In the case of an interconnected flare gas header system, the *flare* includes each individual flare serviced by the interconnected flare gas header system and the interconnected flare gas header system.

*Flare gas header system* means all piping and knockout pots, including those in a subheader system, used to collect and transport gas to a flare either from a process unit or a pressure relief valve from the fuel gas system, regardless of whether or not a flare gas recovery system draws gas from the *flare gas header system.* The *flare gas header system* includes piping inside the battery limit of a process unit if the purpose of the piping is to transport gas to a flare or knockout pot that is part of the flare.

*Flare gas recovery system* means a system of one or more compressors, piping and the associated water seal, rupture disk or similar device used to divert gas from the flare and direct the gas to the fuel gas system or to a fuel gas combustion device.

*Flexicoking unit* means a refinery process unit in which high molecular weight petroleum derivatives are thermally cracked and petroleum coke is continuously produced and then gasified to produce a synthetic fuel gas.

*Fluid catalytic cracking* unit means a refinery process unit in which petroleum derivatives are continuously charged and hydrocarbon molecules in the presence of a catalyst suspended in a fluidized bed are fractured into smaller molecules, or react with a contact material suspended in a fluidized bed to improve feedstock quality for additional processing and the catalyst or contact material is continuously regenerated by burning off coke and other deposits. The unit includes the riser, reactor, regenerator, air blowers, spent catalyst or contact material stripper, catalyst or contact material recovery equipment, and regenerator equipment for controlling air pollutant emissions and for heat recovery. When *fluid catalyst cracking unit* regenerator exhaust from two separate fluid catalytic cracking units share a common exhaust treatment (e.g., CO boiler or wet scrubber), the *fluid catalytic cracking unit* is a single affected facility.

*Fluid coking unit* means a refinery process unit in which high molecular weight petroleum derivatives are thermally cracked and petroleum coke is continuously produced in a fluidized bed system. The *fluid coking unit* includes the coking reactor, the coking burner, and equipment for controlling air pollutant emissions and for heat recovery on the fluid coking burner exhaust vent.

*Forced draft process heater* means a process heater in which the combustion air is supplied under positive pressure produced by a fan at any location in the inlet air line prior to the point where the combustion air enters the process heater or air preheat. For the purposes of this subpart, a process heater that uses fans at both the inlet air side and the exhaust air side ( *i.e.,* balanced draft system) is considered to be a *forced draft process heater.*

*Fuel gas* means any gas which is generated at a petroleum refinery and which is combusted. *Fuel gas* includes natural gas when the natural gas is combined and combusted in any proportion with a gas generated at a refinery. *Fuel gas* does not include gases generated by catalytic cracking unit catalyst regenerators, coke calciners (used to make premium grade coke) and fluid coking burners, but does include gases from flexicoking unit gasifiers and other gasifiers. *Fuel gas* does not include vapors that are collected and combusted in a thermal oxidizer or flare installed to control emissions from wastewater treatment units other than those processing sour water, marine tank vessel loading operations or asphalt processing units ( *i.e.,* asphalt blowing stills).

*Fuel gas combustion device* means any equipment, such as process heaters and boilers, used to combust fuel gas. For the purposes of this subpart, *fuel gas combustion device* does not include flares or facilities in which gases are combusted to produce sulfur or sulfuric acid.

*Fuel gas system* means a system of compressors, piping, knock-out pots, mix drums, and units used to remove sulfur contaminants from the fuel gas (e.g., amine scrubbers) that collects refinery fuel gas from one or more sources for treatment as necessary prior to combusting in process heaters or boilers. A *fuel gas system* may have an overpressure vent to a flare but the primary purpose for a fuel gas system is to provide fuel to the refinery.

*Natural draft process heater* means any process heater in which the combustion air is supplied under ambient or negative pressure without the use of an inlet air (forced draft) fan. For the purposes of this subpart, a *natural draft process heater* is any process heater that is not a forced draft process heater, including induced draft systems.

*Non-emergency flare* means any flare that is not an emergency flare as defined in this subpart.

*Oxidation control system* means an emission control system which reduces emissions from sulfur recovery plants by converting these emissions to sulfur dioxide ($SO_2$ ) and recycling the $SO_2$ to the reactor furnace or the first-stage catalytic reactor of the Claus sulfur recovery plant or converting the $SO_2$ to a sulfur product.

*Petroleum* means the crude oil removed from the earth and the oils derived from tar sands, shale, and coal.

*Petroleum refinery* means any facility engaged in producing gasoline, kerosene, distillate fuel oils, residual fuel oils, lubricants, asphalt (bitumen) or other products through distillation of petroleum or through redistillation, cracking or reforming of unfinished petroleum derivatives. A facility that produces only oil shale or tar sands-derived crude oil for further processing at a petroleum refinery using only solvent extraction and/or distillation to recover diluent is not a *petroleum refinery.*

*Primary flare* means the first flare in a cascaded flare system.

*Process heater* means an enclosed combustion device used to transfer heat indirectly to process stream materials (liquids, gases, or solids) or to a heat transfer material for use in a process unit instead of steam.

*Process upset gas* means any gas generated by a petroleum refinery process unit or by ancillary equipment as a result of startup, shutdown, upset or malfunction.

*Purge gas* means gas introduced between a flare's water seal and a flare's tip to prevent oxygen infiltration (backflow) into the flare tip. For flares with no water seals, the function of *purge gas* is performed by sweep gas ( *i.e.,* flares without water seals do not use *purge gas* ).

*Reduced sulfur compounds* means hydrogen sulfide ($H_2$ S), carbonyl sulfide, and carbon disulfide.

*Reduction control system* means an emission control system which reduces emissions from sulfur recovery plants by converting these emissions to $H_2$ S and either recycling the $H_2$ S to the reactor furnace or the first-stage catalytic reactor of the Claus sulfur recovery plant or converting the $H_2$ S to a sulfur product.

*Refinery process unit* means any segment of the petroleum refinery in which a specific processing operation is conducted.

*Root cause analysis* means an assessment conducted through a process of investigation to determine the primary cause, and any other contributing cause(s), of a discharge of gases in excess of specified thresholds.

*Secondary flare* means a flare in a cascaded flare system that provides additional flare capacity and pressure relief to a flare gas system when the flare gas flow exceeds the capacity of the primary flare. For purposes of this subpart, a *secondary flare* is characterized by infrequent use and must maintain a water seal.

*Sulfur pit* means the storage vessel in which sulfur that is condensed after each Claus catalytic reactor is initially accumulated and stored. *A sulfur pit* does not include secondary sulfur storage vessels downstream of the initial Claus reactor sulfur pits.

*Sulfur recovery plant* means all process units which recover sulfur from $H_2$ S and/or $SO_2$ from a common source of sour gas produced at a petroleum refinery. The *sulfur recovery plant* also includes sulfur pits used to store the recovered sulfur product, but it does not include secondary sulfur storage vessels or loading facilities downstream of the sulfur pits. For example, a Claus sulfur recovery plant includes: Reactor furnace and waste heat boiler, catalytic reactors, sulfur pits and, if present, oxidation or reduction control systems or incinerator, thermal oxidizer or similar combustion device. Multiple sulfur recovery units are a single affected facility only when the units share the same source of sour gas. *Sulfur recovery plants* that receive source gas from completely segregated sour gas treatment systems are separate affected facilities.

*Sweep gas* means the gas introduced in a flare gas header system to maintain a constant flow of gas to prevent oxygen buildup in the flare header. For flares with no water seals, *sweep gas* also performs the function of preventing oxygen infiltration (backflow) into the flare tip.

[73 FR 35867, June 24, 2008, as amended at 77 FR 56464, Sep. 12, 2012]

**§ 60.102a Emissions limitations.**

(a) Each owner or operator that is subject to the requirements of this subpart shall comply with the emissions limitations in paragraphs (b) through (i) of this section on and after the date on which the initial performance test, required by § 60.8, is completed, but not later than 60 days after achieving the maximum production rate at which the affected facility will be operated or 180 days after initial startup, whichever comes first.

(b) An owner or operator subject to the provisions of this subpart shall not discharge or cause the discharge into the atmosphere from any FCCU or FCU:

(1) Particulate matter (PM) in excess of the limits in paragraphs (b)(1)(i), (ii), or (iii) of this section.

(i) 1.0 kilogram per Megagram (kg/Mg)(1 pound (lb) per 1,000 lb) coke burn-off or, if a PM continuous emission monitoring system (CEMS) is used, 0.040 grain per dry standard cubic feet (gr/dscf) corrected to 0 percent excess air for each modified or reconstructed FCCU.

(ii) 0.5 gram per kilogram (g/kg) coke burn-off (0.5 lb PM/1,000 lb coke burn-off) or, if a PM CEMS is used, 0.020 gr/dscf corrected to 0 percent excess air for each newly constructed FCCU.

(iii) 1.0 kg/Mg (1 lb/1,000 lb) coke burn-off; or if a PM CEMS is used, 0.040 grain per dry standard cubic feet (gr/dscf) corrected to 0 percent excess air for each affected FCU.

(2) Nitrogen oxides ($NO_X$ ) in excess of 80 parts per million by volume (ppmv), dry basis corrected to 0 percent excess air, on a 7-day rolling average basis.

(3) Sulfur dioxide ($SO_2$ ) in excess of 50 ppmv dry basis corrected to 0 percent excess air, on a 7-day rolling average basis and 25 ppmv, dry basis corrected to 0 percent excess air, on a 365-day rolling average basis.

(4) Carbon monoxide (CO) in excess of 500 ppmv, dry basis corrected to 0 percent excess air, on an hourly average basis.

(c) The owner or operator of a FCCU or FCU that uses a continuous parameter monitoring system (CPMS) according to § 60.105a(b)(1) shall comply with the applicable control device parameter operating limit in paragraph (c)(1) or (2) of this section.

(1) If the FCCU or FCU is controlled using an electrostatic precipitator:

(i) The 3-hour rolling average total power and secondary current to the entire system must not fall below the level established during the most recent performance test; and

(ii) The daily average exhaust coke burn-off rate must not exceed the level established during the most recent performance test.

(2) If the FCCU or FCU is controlled using a wet scrubber:

(i) The 3-hour rolling average pressure drop must not fall below the level established during the most recent performance test; and

(ii) The 3-hour rolling average liquid-to-gas ratio must not fall below the level established during the most recent performance test.

(d) If an FCCU or FCU uses a continuous opacity monitoring system (COMS) according to the alternative monitoring option in § 60.105a(e), the 3-hour rolling average opacity of emissions from the FCCU or FCU as measured by the COMS must not exceed the site-specific opacity limit established during the most recent performance test.

(e) The owner or operator of a FCCU or FCU that is exempted from the requirement for a CO continuous emissions monitoring system under § 60.105a(h)(3) shall comply with the parameter operating limits in paragraph (e)(1) or (2) of this section.

(1) For a FCCU or FCU with no post-combustion control device:

(i) The hourly average temperature of the exhaust gases exiting the FCCU or FCU must not fall below the level established during the most recent performance test.

(ii) The hourly average oxygen ($O_2$ ) concentration of the exhaust gases exiting the FCCU or FCU must not fall below the level established during the most recent performance test.

(2) For a FCCU or FCU with a post-combustion control device:

(i) The hourly average temperature of the exhaust gas vent stream exiting the control device must not fall below the level established during the most recent performance test.

(ii) The hourly average $O_2$ concentration of the exhaust gas vent stream exiting the control device must not fall below the level established during the most recent performance test.

(f) Except as provided in paragraph (f)(3), each owner or operator of an affected sulfur recovery plant shall comply with the applicable emission limits in paragraphs (f)(1) or (2) of this section.

(1) For a sulfur recovery plant with a capacity greater than 20 long tons per day (LTD):

(i) For a sulfur recovery plant with an oxidation control system or a reduction control system followed by incineration, the owner or operator shall not discharge or cause the discharge of any gases into the atmosphere in excess of 250 ppm by volume (dry basis) of sulfur dioxide ($SO_2$ ) at zero percent excess air. If the sulfur recovery plant consists of multiple process trains or release points the owner or operator shall comply with the 250 ppmv limit for each process train or release point or comply with a flow rate weighted average of 250 ppmv for all release points from the sulfur recovery plant; or

(ii) For a sulfur recovery plant with a reduction control system not followed by incineration, the owner or operator shall not discharge or cause the discharge of any gases into the atmosphere in excess of 300 ppmv of reduced sulfur compounds and 10 ppmv of $H_2S$, each calculated as ppmv $SO_2$ (dry basis) at 0-percent excess air; or

(iii) For systems using oxygen enrichment, the owner or operator shall calculate the applicable emission limit using Equation 1 of this section:

$$E_{LS} = k_1 \times \left(-0.038 * (\%O_2)^2 + 11.53 * \%O_2 + 25.6\right) \qquad \text{(Eq. 1)}$$

Where:

$E_{LS}$ = Emission rate of $SO_2$ for large sulfur recovery plant, ppmv;

$k_1$ = Constant factor for emission limit conversion: $k_1$ = 1 for converting to $SO_2$ limit and $k_1$ = 1.2 for converting to the reduced sulfur compounds limit; and

$\%O_2$ = $O_2$ concentration to the SRP, percent by volume (dry basis).

(2) For a sulfur recovery plant with a capacity of 20 LTD or less:

(i) For a sulfur recovery plant with an oxidation control system or a reduction control system followed by incineration, the owner or operator shall not discharge or cause the discharge of any gases into the atmosphere in excess of 2,500 ppm by volume (dry basis) of $SO_2$ at zero percent excess air. If the sulfur recovery plant consists of multiple process trains or release points the owner or operator shall comply with the 2,500 ppmv limit for each process train or release point or comply with a flow rate weighted average of 2,500 ppmv for all release points from the sulfur recovery plant; or

(ii) For sulfur recovery plant with a reduction control system not followed by incineration, the owner or operator shall not discharge or cause the discharge of any gases into the atmosphere in excess of 3,000 ppm by volume of reduced sulfur compounds and 100 ppm by volume of hydrogen sulfide ($H_2S$), each calculated as ppm $SO_2$ by volume (dry basis) at zero percent excess air; or

(iii) For systems using oxygen enrichment, the owner or operator shall calculate the applicable emission limit using Equation 2 of this section:

$$E_{SS} = k_1 \times \left(-0.38 * (\%O_2)^2 + 115.3 * \%O_2 + 256\right) \qquad \text{(Eq. 2)}$$

Where:

$E_{SS}$ = Emission rate of $SO_2$ for small sulfur recovery plant, ppmv.

(3) Periods of maintenance of the sulfur pit, during which the emission limits in paragraphs (f)(1) and (2) shall not apply, shall not exceed 240 hours per year. The owner or operator must document the time periods during which the sulfur pit vents were not controlled and measures taken to minimize emissions during these periods. Examples of these measures include not adding fresh sulfur or shutting off vent fans.

(g) Each owner or operator of an affected fuel gas combustion device shall comply with the emissions limits in paragraphs (g)(1) and (2) of this section.

(1) Except as provided in (g)(1)(iii) of this section, for each fuel gas combustion device, the owner or operator shall comply with either the emission limit in paragraph (g)(1)(i) of this section or the fuel gas concentration limit in paragraph (g)(1)(ii) of this section.

(i) The owner or operator shall not discharge or cause the discharge of any gases into the atmosphere that contain $SO_2$ in excess of 20 ppmv (dry basis, corrected to 0-percent excess air) determined hourly on a 3-hour rolling average basis and $SO_2$ in excess of 8 ppmv (dry basis, corrected to 0-percent excess air), determined daily on a 365 successive calendar day rolling average basis; or

(ii) The owner or operator shall not burn in any fuel gas combustion device any fuel gas that contains $H_2$ S in excess of 162 ppmv determined hourly on a 3-hour rolling average basis and $H_2$ S in excess of 60 ppmv determined daily on a 365 successive calendar day rolling average basis.

(iii) The combustion in a portable generator of fuel gas released as a result of tank degassing and/or cleaning is exempt from the emissions limits in paragraphs (g)(1)(i) and (ii) of this section.

(2) For each process heater with a rated capacity of greater than 40 million British thermal units per hour (MMBtu/hr) on a higher heating value basis, the owner or operator shall not discharge to the atmosphere any emissions of $NO_X$ in excess of the applicable limits in paragraphs (g)(2)(i) through (iv) of this section.

(i) For each natural draft process heater, comply with the limit in either paragraph (g)(2)(i)(A) or (B) of this section. The owner or operator may comply with either limit at any time, provided that the appropriate parameters for each alternative are monitored as specified in § 60.107a; if fuel gas composition is not monitored as specified in § 60.107a(d), the owner or operator must comply with the concentration limits in paragraph (g)(2)(i)(A) of this section.

(A) 40 ppmv (dry basis, corrected to 0-percent excess air) determined daily on a 30-day rolling average basis; or

(B) 0.040 pounds per million British thermal units (lb/MMBtu) higher heating value basis determined daily on a 30-day rolling average basis.

(ii) For each forced draft process heater, comply with the limit in either paragraph (g)(2)(ii)(A) or (B) of this section. The owner or operator may comply with either limit at any time, provided that the appropriate parameters for each alternative are monitored as specified in § 60.107a; if fuel gas composition is not monitored as specified in § 60.107a(d), the owner or operator must comply with the concentration limits in paragraph (g)(2)(ii)(A) of this section.

(A) 60 ppmv (dry basis, corrected to 0-percent excess air) determined daily on a 30-day rolling average basis; or

(B) 0.060 lb/MMBtu higher heating value basis determined daily on a 30-day rolling average basis.

(iii) For each co-fired natural draft process heater, comply with the limit in either paragraph (g)(2)(iii)(A) or (B) of this section. The owner or operator must choose one of the emissions limits with which to comply at all times:

(A) 150 ppmv (dry basis, corrected to 0-percent excess air) determined daily on a 30 successive operating day rolling average basis; or

(B) The daily average emissions limit calculated using Equation 3 of this section:

$$ER_{NOx} = \frac{0.06\,Q_{gas}\,HHV_{gas} + 0.35\,Q_{oil}\,HHV_{oil}}{Q_{gas}\,HHV_{gas} + Q_{oil}\,HHV_{oil}} \qquad \text{(Eq. 3)}$$

*Where:*

$ER_{NOx}$ = Daily allowable average emission rate of $NO_X$ , lb/MMBtu (higher heating value basis);

$Q_{gas}$ = Daily average volumetric flow rate of fuel gas, standard cubic feet per day (scf/day);

$Q_{oil}$ = Daily average volumetric flow rate of fuel oil, scf/day;

$HHV_{gas}$ = Daily average higher heating value of gas fired to the process heater, MMBtu/scf; and

$HHV_{oil}$ = Daily average higher heating value of fuel oil fired to the process heater, MMBtu/scf.

(iv) For each co-fired forced draft process heater, comply with the limit in either paragraph (g)(2)(iv)(A) or (B) of this section. The owner or operator must choose one of the emissions limits with which to comply at all times:

(A) 150 ppmv (dry basis, corrected to 0-percent excess air) determined daily on a 30 successive operating day rolling average basis; or

(B) The daily average emissions limit calculated using Equation 4 of this section:

$$ER_{NOx} = \frac{0.11 Q_{gas} HHV_{gas} + 0.40 Q_{oil} HHV_{oil}}{Q_{gas} HHV_{gas} + Q_{oil} HHV_{oil}} \qquad \text{(Eq. 4)}$$

*Where:*

$ER_{NOx}$ = Daily allowable average emission rate of $NO_X$ , lb/MMBtu (higher heating value basis);

$Q_{gas}$ = Daily average volumetric flow rate of fuel gas, scf/day;

$Q_{oil}$ = Daily average volumetric flow rate of fuel oil, scf/day;

$HHV_{gas}$ = Daily average higher heating value of gas fired to the process heater, MMBtu/scf; and

$HHV_{oil}$ = Daily average higher heating value of fuel oil fired to the process heater, MMBtu/scf.

(h) [Reserved]

(i) For a process heater that meets any of the criteria of paragraphs (i)(1)(i) through (iv) of this section, an owner or operator may request approval from the Administrator for a $NO_X$ emissions limit which shall apply specifically to that affected facility. The request shall include information as described in paragraph (i)(2) of this section. The request shall be submitted and followed as described in paragraph (i)(3) of this section.

(1) A process heater that meets one of the criteria in paragraphs (i)(1)(i) through (iv) of this section may apply for a site-specific $NO_X$ emissions limit:

(i) A modified or reconstructed process heater that lacks sufficient space to accommodate installation and proper operation of combustion modification-based technology ( *e.g.,* ultra-low $NO_X$ burners); or

(ii) A modified or reconstructed process heater that has downwardly firing induced draft burners; or

(iii) A co-fired process heater; or

(iv) A process heater operating at reduced firing conditions for an extended period of time ( *i.e.,* operating in turndown mode). The site-specific $NO_X$ emissions limit will only apply for those operating conditions.

(2) The request shall include sufficient and appropriate data, as determined by the Administrator, to allow the Administrator to confirm that the process heater is unable to comply with the applicable $NO_X$ emissions limit in paragraph (g)(2) of this section. At a minimum, the request shall contain the information described in paragraphs (i)(2)(i) through (iv) of this section.

(i) The design and dimensions of the process heater, evaluation of available combustion modification-based technology, description of fuel gas and, if applicable, fuel oil characteristics, information regarding the combustion conditions (temperature, oxygen content, firing rates) and other information needed to demonstrate that the process heater meets one of the four classes of process heaters listed in paragraph (i)(1) of this section.

(ii) An explanation of how the data in paragraph (i)(2)(i) demonstrate that ultra-low $NO_X$ burners, flue gas recirculation, control of excess air or other combustion modification-based technology (including combinations of these combustion modification-based technologies) cannot be used to meet the applicable emissions limit in paragraph (g)(2) of this section.

(iii) Results of a performance test conducted under representative conditions using the applicable methods specified in § 60.104a(i) to demonstrate the performance of the technology the owner or operator will use to minimize $NO_X$ emissions.

(iv) The means by which the owner or operator will document continuous compliance with the site-specific emissions limit.

(3) The request shall be submitted and followed as described in paragraphs (i)(3)(i) through (iii) of this section.

(i) The owner or operator of a process heater that meets one of the criteria in paragraphs (i)(1)(i) through (iv) of this section may request approval from the Administrator within 180 days after initial startup of the process heater for a $NO_X$ emissions limit which shall apply specifically to that affected facility.

(ii) The request must be submitted to the Administrator for approval. The owner or operator must comply with the request as submitted until it is approved.

(iii) The request shall also be submitted to the following address: U.S. Environmental Protection Agency, Office of Air Quality Planning and Standards, Sector Policies and Programs Division, U.S. EPA Mailroom (E143-01), Attention: Refinery Sector Lead, 109 T.W. Alexander Drive, Research Triangle Park, NC 27711. Electronic copies in lieu of hard copies may also be submitted to *refinerynsps@epa.gov* .

(4) The approval process for a request for a facility-specific $NO_X$ emissions limit is described in paragraphs (i)(4)(i) through (iii) of this section.

(i) Approval by the Administrator of a facility-specific $NO_X$ emissions limit request will be based on the completeness, accuracy and reasonableness of the request. Factors that the EPA will consider in reviewing the request for approval include, but are not limited to, the following:

(A) A demonstration that the process heater meets one of the four classes of process heaters outlined in paragraphs (i)(1) of this section;

(B) A description of the low-$NO_X$ burner designs and other combustion modifications considered for reducing $NO_X$ emissions;

(C) The combustion modification option selected; and

(D) The operating conditions (firing rate, heater box temperature and excess oxygen concentration) at which the $NO_X$ emission level was established.

(ii) If the request is approved by the Administrator, a facility-specific $NO_X$ emissions limit will be established at the $NO_X$ emission level demonstrated in the approved request.

(iii) If the Administrator finds any deficiencies in the request, the request must be revised to address the deficiencies and be re-submitted for approval.

[73 FR 35867, June 24, 2008, as amended at 77 FR 56466, Sep. 12, 2012]

**§ 60.103a Design, equipment, work practice or operational standards.**

(a) Except as provided in paragraph (g) of this section, each owner or operator that operates a flare that is subject to this subpart shall develop and implement a written flare management plan no later than the date specified in

paragraph (b) of this section. The flare management plan must include the information described in paragraphs (a)(1) through (7) of this section.

(1) A listing of all refinery process units, ancillary equipment, and fuel gas systems connected to the flare for each affected flare.

(2) An assessment of whether discharges to affected flares from these process units, ancillary equipment and fuel gas systems can be minimized. The flare minimization assessment must (at a minimum) consider the items in paragraphs (a)(2)(i) through (iv) of this section. The assessment must provide clear rationale in terms of costs (capital and annual operating), natural gas offset credits (if applicable), technical feasibility, secondary environmental impacts and safety considerations for the selected minimization alternative(s) or a statement, with justifications, that flow reduction could not be achieved. Based upon the assessment, each owner or operator of an affected flare shall identify the minimization alternatives that it has implemented by the due date of the flare management plan and shall include a schedule for the prompt implementation of any selected measures that cannot reasonably be completed as of that date.

(i) Elimination of process gas discharge to the flare through process operating changes or gas recovery at the source.

(ii) Reduction of the volume of process gas to the flare through process operating changes.

(iii) Installation of a flare gas recovery system or, for facilities that are fuel gas rich, a flare gas recovery system and a co-generation unit or combined heat and power unit.

(iv) Minimization of sweep gas flow rates and, for flares with water seals, purge gas flow rates.

(3) A description of each affected flare containing the information in paragraphs (a)(3)(i) through (vii) of this section.

(i) A general description of the flare, including the information in paragraphs (a)(3)(i)(A) through (G) of this section.

(A) Whether it is a ground flare or elevated (including height).

(B) The type of assist system ( *e.g.,* air, steam, pressure, non-assisted).

(C) Whether it is simple or complex flare tip ( *e.g.,* staged, sequential).

(D) Whether the flare is part of a cascaded flare system (and if so, whether the flare is primary or secondary).

(E) Whether the flare serves as a backup to another flare.

(F) Whether the flare is an emergency flare or a non-emergency flare.

(G) Whether the flare is equipped with a flare gas recovery system.

(ii) Description and simple process flow diagram showing the interconnection of the following components of the flare: flare tip (date installed, manufacturer, nominal and effective tip diameter, tip drawing); knockout or surge drum(s) or pot(s) (including dimensions and design capacities); flare header(s) and subheader(s); assist system; and ignition system.

(iii) Flare design parameters, including the maximum vent gas flow rate; minimum sweep gas flow rate; minimum purge gas flow rate (if any); maximum supplemental gas flow rate; maximum pilot gas flow rate; and, if the flare is steam-assisted, minimum total steam rate.

(iv) Description and simple process flow diagram showing all gas lines (including flare, purge (if applicable), sweep, supplemental and pilot gas) that are associated with the flare. For purge, sweep, supplemental and pilot gas, identify the type of gas used. Designate which lines are exempt from sulfur, $H_2$ S or flow monitoring and why ( *e.g.,* natural

gas, inherently low sulfur, pilot gas). Designate which lines are monitored and identify on the process flow diagram the location and type of each monitor.

(v) For each flow rate, $H_2S$, sulfur content, pressure or water seal monitor identified in paragraph (a)(3)(iv) of this section, provide a detailed description of the manufacturer's specifications, including, but not limited to, make, model, type, range, precision, accuracy, calibration, maintenance and quality assurance procedures.

(vi) For emergency flares, secondary flares and flares equipped with a flare gas recovery system designed, sized and operated to capture all flows except those resulting from startup, shutdown or malfunction:

(A) Description of the water seal, including the operating range for the liquid level.

(B) Designation of the monitoring option elected (flow and sulfur monitoring or pressure and water seal liquid level monitoring).

(vii) For flares equipped with a flare gas recovery system:

(A) A description of the flare gas recovery system, including number of compressors and capacity of each compressor.

(B) A description of the monitoring parameters used to quantify the amount of flare gas recovered.

(C) For systems with staged compressors, the maximum time period required to begin gas recovery with the secondary compressor(s), the monitoring parameters and procedures used to minimize the duration of releases during compressor staging and a justification for why the maximum time period cannot be further reduced.

(4) An evaluation of the baseline flow to the flare. The baseline flow to the flare must be determined after implementing the minimization assessment in paragraph (a)(2) of this section. Baseline flows do not include pilot gas flow or purge gas flow ( *i.e.,* gas introduced after the flare's water seal) provided these gas flows remain reasonably constant ( *i.e.,* separate flow monitors for these streams are not required). Separate baseline flow rates may be established for different operating conditions provided that the management plan includes:

(i) A primary baseline flow rate that will be used as the default baseline for all conditions except those specifically delineated in the plan;

(ii) A description of each special condition for which an alternate baseline is established, including the rationale for each alternate baseline, the daily flow for each alternate baseline and the expected duration of the special conditions for each alternate baseline; and

(iii) Procedures to minimize discharges to the affected flare during each special condition described in paragraph (a)(4)(ii) of this section, unless procedures are already developed for these cases under paragraph (a)(5) through (7) of this section, as applicable.

(5) Procedures to minimize or eliminate discharges to the flare during the planned startup and shutdown of the refinery process units and ancillary equipment that are connected to the affected flare, together with a schedule for the prompt implementation of any procedures that cannot reasonably be implemented as of the date of the submission of the flare management plan.

(6) Procedures to reduce flaring in cases of fuel gas imbalance ( *i.e.,* excess fuel gas for the refinery's energy needs), together with a schedule for the prompt implementation of any procedures that cannot reasonably be implemented as of the date of the submission of the flare management plan.

(7) For flares equipped with flare gas recovery systems, procedures to minimize the frequency and duration of outages of the flare gas recovery system and procedures to minimize the volume of gas flared during such outages, together with a schedule for the prompt implementation of any procedures that cannot reasonably be implemented as of the date of the submission of the flare management plan.

(b) Except as provided in paragraph (g) of this section, each owner or operator required to develop and implement a written flare management plan as described in paragraph (a) of this section must submit the plan to the Administrator as described in paragraphs (b)(1) through (3) of this section.

(1) The owner or operator of a newly constructed or reconstructed flare must develop and implement the flare management plan by no later than the date that the flare becomes an affected facility subject to this subpart, except for the selected minimization alternatives in paragraph (a)(2) and/or the procedures in paragraphs (a)(5) though (a)(7) of this section that cannot reasonably be implemented by that date, which the owner or operator must implement in accordance with the schedule in the flare management plan. The owner or operator of a modified flare must develop and implement the flare management plan by no later than November 11, 2015 or upon startup of the modified flare, whichever is later.

(2) The owner or operator must comply with the plan as submitted by the date specified in paragraph (b)(1) of this section. The plan should be updated periodically to account for changes in the operation of the flare, such as new connections to the flare or the installation of a flare gas recovery system, but the plan need be re-submitted to the Administrator only if the owner or operator adds an alternative baseline flow rate, revises an existing baseline as described in paragraph (a)(4) of this section, installs a flare gas recovery system or is required to change flare designations and monitoring methods as described in § 60.107a(g). The owner or operator must comply with the updated plan as submitted.

(3) All versions of the plan submitted to the Administrator shall also be submitted to the following address: U.S. Environmental Protection Agency, Office of Air Quality Planning and Standards, Sector Policies and Programs Division, U.S. EPA Mailroom (E143-01), Attention: Refinery Sector Lead, 109 T.W. Alexander Drive, Research Triangle Park, NC 27711. Electronic copies in lieu of hard copies may also be submitted to *refinerynsps@epa.gov* .

(c) Except as provided in paragraphs (f) and (g) of this section, each owner or operator that operates a fuel gas combustion device, flare or sulfur recovery plant subject to this subpart shall conduct a root cause analysis and a corrective action analysis for each of the conditions specified in paragraphs (c)(1) through (3) of this section.

(1) For a flare:

(i) Any time the $SO_2$ emissions exceed 227 kilograms (kg) (500 lb) in any 24-hour period; or

(ii) Any discharge to the flare in excess of 14,160 standard cubic meters ($m^3$ ) (500,000 standard cubic feet (scf)) above the baseline, determined in paragraph (a)(4) of this section, in any 24-hour period; or

(iii) If the monitoring alternative in § 60.107a(g) is elected, any period when the flare gas line pressure exceeds the water seal liquid depth, except for periods attributable to compressor staging that do not exceed the staging time specified in paragraph (a)(3)(vii)(C) of this section.

(2) For a fuel gas combustion device, each exceedance of an applicable short-term emissions limit in § 60.102a(g)(1) if the $SO_2$ discharge to the atmosphere is 227 kg (500 lb) greater than the amount that would have been emitted if the emissions limits had been met during one or more consecutive periods of excess emissions or any 24-hour period, whichever is shorter.

(3) For a sulfur recovery plant, each time the $SO_2$ emissions are more than 227 kg (500 lb) greater than the amount that would have been emitted if the $SO_2$ or reduced sulfur concentration was equal to the applicable emissions limit in § 60.102a(f)(1) or (2) during one or more consecutive periods of excess emissions or any 24-hour period, whichever is shorter.

(d) Except as provided in paragraphs (f) and (g) of this section, a root cause analysis and corrective action analysis must be completed as soon as possible, but no later than 45 days after a discharge meeting one of the conditions specified in paragraphs (c)(1) through (3) of this section. Special circumstances affecting the number of root cause analyses and/or corrective action analyses are provided in paragraphs (d)(1) through (5) of this section.

(1) If a single continuous discharge meets any of the conditions specified in paragraphs (c)(1) through (3) of this section for 2 or more consecutive 24-hour periods, a single root cause analysis and corrective action analysis may be conducted.

(2) If a single discharge from a flare triggers a root cause analysis based on more than one of the conditions specified in paragraphs (c)(1)(i) through (iii) of this section, a single root cause analysis and corrective action analysis may be conducted.

(3) If the discharge from a flare is the result of a planned startup or shutdown of a refinery process unit or ancillary equipment connected to the affected flare and the procedures in paragraph (a)(5) of this section were followed, a root cause analysis and corrective action analysis is not required; however, the discharge must be recorded as described in § 60.108a(c)(6) and reported as described in § 60.108a(d)(5).

(4) If both the primary and secondary flare in a cascaded flare system meet any of the conditions specified in paragraphs (c)(1)(i) through (iii) of this section in the same 24-hour period, a single root cause analysis and corrective action analysis may be conducted.

(5) Except as provided in paragraph (d)(4) of this section, if discharges occur that meet any of the conditions specified in paragraphs (c)(1) through (3) of this section for more than one affected facility in the same 24-hour period, initial root cause analyses shall be conducted for each affected facility. If the initial root cause analyses indicate that the discharges have the same root cause(s), the initial root cause analyses can be recorded as a single root cause analysis and a single corrective action analysis may be conducted.

(e) Except as provided in paragraphs (f) and (g) of this section, each owner or operator of a fuel gas combustion device, flare or sulfur recovery plant subject to this subpart shall implement the corrective action(s) identified in the corrective action analysis conducted pursuant to paragraph (d) of this section in accordance with the applicable requirements in paragraphs (e)(1) through (3) of this section.

(1) All corrective action(s) must be implemented within 45 days of the discharge for which the root cause and corrective action analyses were required or as soon thereafter as practicable. If an owner or operator concludes that corrective action should not be conducted, the owner or operator shall record and explain the basis for that conclusion no later than 45 days following the discharge as specified in § 60.108a(c)(6)(ix).

(2) For corrective actions that cannot be fully implemented within 45 days following the discharge for which the root cause and corrective action analyses were required, the owner or operator shall develop an implementation schedule to complete the corrective action(s) as soon as practicable.

(3) No later than 45 days following the discharge for which a root cause and corrective action analyses were required, the owner or operator shall record the corrective action(s) completed to date, and, for action(s) not already completed, a schedule for implementation, including proposed commencement and completion dates as specified in § 60.108a(c)(6)(x).

(f) Modified flares shall comply with the requirements of paragraphs (c) through (e) of this section by November 11, 2015 or at startup of the modified flare, whichever is later. Modified flares that were not affected facilities subject to subpart J of this part prior to becoming affected facilities under § 60.100a shall comply with the requirements of paragraph (h) of this section and the requirements of § 60.107a(a)(2) by November 11, 2015 or at startup of the modified flare, whichever is later. Modified flares that were affected facilities subject to subpart J of this part prior to becoming affected facilities under § 60.100a shall comply with the requirements of paragraph (h) of this section and the requirements of § 60.107a(a)(2) by November 13, 2012 or at startup of the modified flare, whichever is later, except that modified flares that have accepted applicability of subpart J under a federal consent decree shall comply with the subpart J requirements as specified in the consent decree, but shall comply with the requirements of paragraph (h) of this section and the requirements of § 60.107a(a)(2) by no later than November 11, 2015.

(g) An affected flare subject to this subpart located in the Bay Area Air Quality Management District (BAAQMD) may elect to comply with both BAAQMD Regulation 12, Rule 11 and BAAQMD Regulation 12, Rule 12 as an alternative to complying with the requirements of paragraphs (a) through (e) of this section. An affected flare subject to this subpart located in the South Coast Air Quality Management District (SCAQMD) may elect to comply with SCAQMD Rule 1118 as an alternative to complying with the requirements of paragraphs (a) through (e) of this section. The owner or operator of an affected flare must notify the Administrator that the flare is in compliance with BAAQMD Regulation 12, Rule 11 and BAAQMD Regulation 12, Rule 12 or SCAQMD Rule 1118. The owner or operator of an affected flare shall also submit the existing flare management plan to the following address: U.S. Environmental Protection Agency, Office of Air Quality Planning and Standards, Sector Policies and Programs Division, U.S. EPA Mailroom (E143-01),

Attention: Refinery Sector Lead, 109 T.W. Alexander Drive, Research Triangle Park, NC 27711. Electronic copies in lieu of hard copies may also be submitted to *refinerynsps@epa.gov* .

(h) Each owner or operator shall not burn in any affected flare any fuel gas that contains $H_2S$ in excess of 162 ppmv determined hourly on a 3-hour rolling average basis. The combustion in a flare of process upset gases or fuel gas that is released to the flare as a result of relief valve leakage or other emergency malfunctions is exempt from this limit.

(i) Each owner or operator of a delayed coking unit shall depressure each coke drum to 5 lb per square inch gauge (psig) or less prior to discharging the coke drum steam exhaust to the atmosphere. Until the coke drum pressure reaches 5 psig, the coke drum steam exhaust must be managed in an enclosed blowdown system and the uncondensed vapor must either be recovered ( *e.g.,* sent to the delayed coking unit fractionators) or vented to the fuel gas system, a fuel gas combustion device or a flare.

(j) *Alternative means of emission limitation.* (1) Each owner or operator subject to the provisions of this section may apply to the Administrator for a determination of equivalence for any means of emission limitation that achieves a reduction in emissions of a specified pollutant at least equivalent to the reduction in emissions of that pollutant achieved by the controls required in this section.

(2) Determination of equivalence to the design, equipment, work practice or operational requirements of this section will be evaluated by the following guidelines:

(i) Each owner or operator applying for a determination of equivalence shall be responsible for collecting and verifying test data to demonstrate the equivalence of the alternative means of emission limitation.

(ii) For each affected facility for which a determination of equivalence is requested, the emission reduction achieved by the design, equipment, work practice or operational requirements shall be demonstrated.

(iii) For each affected facility for which a determination of equivalence is requested, the emission reduction achieved by the alternative means of emission limitation shall be demonstrated.

(iv) Each owner or operator applying for a determination of equivalence to a work practice standard shall commit in writing to work practice(s) that provide for emission reductions equal to or greater than the emission reductions achieved by the required work practice.

(v) The Administrator will compare the demonstrated emission reduction for the alternative means of emission limitation to the demonstrated emission reduction for the design, equipment, work practice or operational requirements and, if applicable, will consider the commitment in paragraph (j)(2)(iv) of this section.

(vi) The Administrator may condition the approval of the alternative means of emission limitation on requirements that may be necessary to ensure operation and maintenance to achieve the same emissions reduction as the design, equipment, work practice or operational requirements.

(3) An owner or operator may offer a unique approach to demonstrate the equivalence of any equivalent means of emission limitation.

(4) Approval of the application for equivalence to the design, equipment, work practice or operational requirements of this section will be evaluated by the following guidelines:

(i) After a request for determination of equivalence is received, the Administrator will publish a notice in the FEDERAL REGISTER and provide the opportunity for public hearing if the Administrator judges that the request may be approved.

(ii) After notice and opportunity for public hearing, the Administrator will determine the equivalence of a means of emission limitation and will publish the determination in the FEDERAL REGISTER .

(iii) Any equivalent means of emission limitations approved under this section shall constitute a required work practice, equipment, design or operational standard within the meaning of section 111(h)(1) of the CAA.

(5) Manufacturers of equipment used to control emissions may apply to the Administrator for determination of equivalence for any alternative means of emission limitation that achieves a reduction in emissions achieved by the equipment, design and operational requirements of this section. The Administrator will make an equivalence determination according to the provisions of paragraphs (j)(2) through (4) of this section.

[77 FR 56467, Sep. 12, 2012]

**§ 60.104a Performance tests.**

(a) The owner or operator shall conduct a performance test for each FCCU, FCU, sulfur recovery plant, flare and fuel gas combustion device to demonstrate initial compliance with each applicable emissions limit in § 60.102a according to the requirements of § 60.8. The notification requirements of § 60.8(d) apply to the initial performance test and to subsequent performance tests required by paragraph (b) of this section (or as required by the Administrator), but does not apply to performance tests conducted for the purpose of obtaining supplemental data because of continuous monitoring system breakdowns, repairs, calibration checks and zero and span adjustments.

(b) The owner or operator of a FCCU or FCU that elects to monitor control device operating parameters according to the requirements in § 60.105a(b), to use bag leak detectors according to the requirements in § 60.105a(c), or to use COMS according to the requirements in § 60.105a(e) shall conduct a PM performance test at least once every 12 months and furnish the Administrator a written report of the results of each test.

(c) In conducting the performance tests required by this subpart (or as requested by the Administrator), the owner or operator shall use the test methods in 40 CFR part 60, Appendices A-1 through A-8 or other methods as specified in this section, except as provided in § 60.8(b).

(d) The owner or operator shall determine compliance with the PM, $NO_X$ , $SO_2$ , and CO emissions limits in § 60.102a(b) for FCCU and FCU using the following methods and procedures:

(1) Method 1 of appendix A-1 to part 60 for sample and velocity traverses.

(2) Method 2 of appendix A-1 to part 60 for velocity and volumetric flow rate.

(3) Method 3, 3A, or 3B of appendix A-2 to part 60 for gas analysis. The method ANSI/ASME PTC 19.10-1981, “Flue and Exhaust Gas Analyses,” (incorporated by reference—see § 60.17) is an acceptable alternative to EPA Method 3B of appendix A-2 to part 60.

(4) Method 5, 5B, or 5F of appendix A-3 to part 60 for determining PM emissions and associated moisture content from a FCCU or FCU without a wet scrubber subject to the emissions limit in § 63.102a(b)(1). Use Method 5 or 5B of appendix A-3 to part 60 for determining PM emissions and associated moisture content from a FCCU or FCU with a wet scrubber subject to the emissions limit in § 63.102a(b)(1).

(i) The PM performance test consists of 3 valid test runs; the duration of each test run must be no less than 60 minutes.

(ii) The emissions rate of PM ($E_{PM}$ ) is computed for each run using Equation 5 of this section:

$$E = \frac{c_s Q_{sd}}{K R_c} \qquad \text{(Eq. 5)}$$

*Where:*

E = Emission rate of PM, g/kg (lb/1,000 lb) of coke burn-off;

$c_s$ = Concentration of total PM, grams per dry standard cubic meter (g/dscm) (gr/dscf);

$Q_{sd}$ = Volumetric flow rate of effluent gas, dry standard cubic meters per hour (dry standard cubic feet per hour);

$R_c$ = Coke burn-off rate, kilograms per hour (kg/hr) [lb per hour (lb/hr)] coke; and

K = Conversion factor, 1.0 grams per gram (7,000 grains per lb).

(iii) The coke burn-off rate ($R_c$ ) is computed for each run using Equation 6 of this section:

$$R_c = K_1 Q_r (\%CO_2 + \%CO) + K_2 Q_a - K_3 Q_r \left(\%CO/2 + \%CO_2 + \%O_2\right) + K_3 Q_{oxy} (\%O_{oxy})$$

(Eq. 6)

*Where:*

$R_c$ = Coke burn-off rate, kg/hr (lb/hr);

$Q_r$ = Volumetric flow rate of exhaust gas from FCCU regenerator or fluid coking burner before any emissions control or energy recovery system that burns auxiliary fuel, dry standard cubic meters per minute (dscm/min) [dry standard cubic feet per minute (dscf/min)];

$Q_a$ = Volumetric flow rate of air to FCCU regenerator or fluid coking burner, as determined from the unit's control room instrumentation, dscm/min (dscf/min);

$Q_{oxy}$ = Volumetric flow rate of $O_2$ enriched air to FCCU regenerator or fluid coking unit, as determined from the unit's control room instrumentation, dscm/min (dscf/min);

$\%CO_2$ = Carbon dioxide ($CO_2$ ) concentration in FCCU regenerator or fluid coking burner exhaust, percent by volume (dry basis);

%CO = CO concentration in FCCU regenerator or fluid coking burner exhaust, percent by volume (dry basis);

$\%O_2$ = $O_2$ concentration in FCCU regenerator or fluid coking burner exhaust, percent by volume (dry basis);

$\%O_{oxy}$ = $O_2$ concentration in $O_2$ enriched air stream inlet to the FCCU regenerator or fluid coking burner, percent by volume (dry basis);

$K_1$ = Material balance and conversion factor, 0.2982 (kg-min)/(hr-dscm-%) [0.0186 (lb-min)/(hr-dscf-%)];

$K_2$ = Material balance and conversion factor, 2.088 (kg-min)/(hr-dscm) [0.1303 (lb-min)/(hr-dscf)]; and

$K_3$ = Material balance and conversion factor, 0.0994 (kg-min)/(hr-dscm-%) [0.00624 (lb-min)/(hr-dscf-%)].

(iv) During the performance test, the volumetric flow rate of exhaust gas from catalyst regenerator ($Q_r$ ) before any emission control or energy recovery system that burns auxiliary fuel is measured using Method 2 of appendix A-1 to part 60.

(v) For subsequent calculations of coke burn-off rates or exhaust gas flow rates, the volumetric flow rate of $Q_r$ is calculated using average exhaust gas concentrations as measured by the monitors required in § 60.105a(b)(2), if applicable, using Equation 7 of this section:

$$Q_r = \frac{79 \times Q_a + (100 - \%Oxy) \times Q_{oxy}}{100 - \%CO_2 - \%CO - \%O_2} \qquad \text{(Eq. 7)}$$

*Where:*

$Q_r$ = Volumetric flow rate of exhaust gas from FCCU regenerator or fluid coking burner before any emission control or energy recovery system that burns auxiliary fuel, dscm/min (dscf/min);

$Q_a$ = Volumetric flow rate of air to FCCU regenerator or fluid coking burner, as determined from the unit's control room instrumentation, dscm/min (dscf/min);

$Q_{oxy}$ = Volumetric flow rate of $O_2$ enriched air to FCCU regenerator or fluid coking unit, as determined from the unit's control room instrumentation, dscm/min (dscf/min);

$\%CO_2$ = Carbon dioxide concentration in FCCU regenerator or fluid coking burner exhaust, percent by volume (dry basis);

%CO = CO concentration FCCU regenerator or fluid coking burner exhaust, percent by volume (dry basis). When no auxiliary fuel is burned and a continuous CO monitor is not required in accordance with § 60.105a(h)(3), assume %CO to be zero;

$\%O_2$ = $O_2$ concentration in FCCU regenerator or fluid coking burner exhaust, percent by volume (dry basis); and

$\%O_{oxy}$ = $O_2$ concentration in $O_2$ enriched air stream inlet to the FCCU regenerator or fluid coking burner, percent by volume (dry basis).

(5) Method 6, 6A, or 6C of appendix A-4 to part 60 for moisture content and for the concentration of $SO_2$ ; the duration of each test run must be no less than 4 hours. The method ANSI/ASME PTC 19.10-1981, “Flue and Exhaust Gas Analyses,” (incorporated by reference—see § 60.17) is an acceptable alternative to EPA Method 6 or 6A of appendix A-4 to part 60.

(6) Method 7, 7A, 7C, 7D, or 7E of appendix A-4 to part 60 for moisture content and for the concentration of $NO_X$ calculated as nitrogen dioxide ($NO_2$ ); the duration of each test run must be no less than 4 hours. The method ANSI/ASME PTC 19.10-1981, “Flue and Exhaust Gas Analyses,” (incorporated by reference—see § 60.17) is an acceptable alternative to EPA Method 7 or 7C of appendix A-4 to part 60.

(7) Method 10, 10A, or 10B of appendix A-4 to part 60 for moisture content and for the concentration of CO. The sampling time for each run must be 60 minutes.

(8) The owner or operator shall adjust PM, $NO_X$ , $SO_2$ and CO pollutant concentrations to 0-percent excess air or 0-percent $O_2$ using Equation 8 of this section:

$$C_{adj} = C_{meas}\left[{20.9_c}\Big/{(20.9 - \%O_2)}\right] \qquad \text{(Eq. 8)}$$

*Where:*

$C_{adj}$ = pollutant concentration adjusted to 0-percent excess air or $O_2$ , parts per million (ppm) or g/dscm;

$C_{meas}$ = pollutant concentration measured on a dry basis, ppm or g/dscm;

$20.9_c$ = 20.9 percent $O_2$ −0.0 percent $O_2$ (defined $O_2$ correction basis), percent;

20.9 = $O_2$ concentration in air, percent; and

$\%O_2$ = $O_2$ concentration measured on a dry basis, percent.

(e) The owner or operator of a FCCU or FCU that is controlled by an electrostatic precipitator or wet scrubber and that is subject to control device operating parameter limits in § 60.102a(c) shall establish the limits based on the performance test results according to the following procedures:

(1) Reduce the parameter monitoring data to hourly averages for each test run;

(2) Determine the hourly average operating limit for each required parameter as the average of the three test runs.

(f) The owner or operator of an FCCU or FCU that uses cyclones to comply with the PM limit in § 60.102a(b)(1) and elects to comply with the COMS alternative monitoring option in § 60.105a(d) shall establish a site-specific opacity operating limit according to the procedures in paragraphs (f)(1) through (3) of this section.

(1) Collect COMS data every 10 seconds during the entire period of the PM performance test and reduce the data to 6-minute averages.

(2) Determine and record the hourly average opacity from all the 6-minute averages.

(3) Compute the site-specific limit using Equation 9 of this section:

$$Opacity\ \ Limit = Opacity_{st}\ x\left(\frac{1\ \text{lb}/1{,}000\ \text{lb coke burn}}{PMEmR_{st}}\right) \qquad \text{(Eq. 9)}$$

*Where:*

Opacity limit = Maximum permissible 3-hour average opacity, percent, or 10 percent, whichever is greater;

$Opacity_{st}$ = Hourly average opacity measured during the source test, percent; and

$PMEmR_{st}$ = PM emission rate measured during the source test, lb/1,000 lb coke burn.

(g) The owner or operator of a FCCU or FCU that is exempt from the requirement to install and operate a CO CEMS pursuant to § 60.105a(h)(3) and that is subject to control device operating parameter limits in § 60.102a(c) shall establish the limits based on the performance test results using the procedures in paragraphs (g)(1) and (2) of this section.

(1) Reduce the temperature and $O_2$ concentrations from the parameter monitoring systems to hourly averages for each test run.

(2) Determine the operating limit for temperature and $O_2$ concentrations as the average of the average temperature and $O_2$ concentration for the three test runs.

(h) The owner or operator shall determine compliance with the $SO_2$ and $H_2$ S emissions limits for sulfur recovery plants in §§ 60.102a(f)(1)(i), 60.102a(f)(1)(iii), 60.102a(f)(1)(iii), 60.102a(f)(2)(i), and 60.102a(f)(2)(iii) and the reduced sulfur compounds and $H_2$ S emissions limits for sulfur recovery plants in § 60.102a(f)(1)(ii) and § 60.102a(f)(2)(ii) using the following methods and procedures:

(1) Method 1 of appendix A-1 to part 60 for sample and velocity traverses.

(2) Method 2 of appendix A-1 to part 60 for velocity and volumetric flow rate.

(3) Method 3, 3A, or 3B of appendix A-2 to part 60 for gas analysis. The method ANSI/ASME PTC 19.10-1981, “Flue and Exhaust Gas Analyses,” (incorporated by reference—see § 60.17) is an acceptable alternative to EPA Method 3B of appendix A-2 to part 60.

(4) Method 6, 6A, or 6C of appendix A-4 to part 60 to determine the $SO_2$ concentration. The method ANSI/ASME PTC 19.10-1981, “Flue and Exhaust Gas Analyses,” (incorporated by reference—see § 60.17) is an acceptable alternative to EPA Method 6 or 6A of appendix A-4 to part 60.

(5) Method 15 or 15A of appendix A-5 to part 60 or Method 16 of appendix A-6 to part 60 to determine the reduced sulfur compounds and $H_2$ S concentrations. The method ANSI/ASME PTC 19.10-1981, “Flue and Exhaust Gas Analyses,” (incorporated by reference—see § 60.17) is an acceptable alternative to EPA Method 15A of appendix A-5 to part 60.

(i) Each run consists of 16 samples taken over a minimum of 3 hours.

(ii) The owner or operator shall calculate the average $H_2$ S concentration after correcting for moisture and $O_2$ as the arithmetic average of the $H_2$ S concentration for each sample during the run (ppmv, dry basis, corrected to 0 percent excess air).

(iii) The owner or operator shall calculate the $SO_2$ equivalent for each run after correcting for moisture and $O_2$ as the arithmetic average of the $SO_2$ equivalent of reduced sulfur compounds for each sample during the run (ppmv, dry basis, corrected to 0 percent excess air).

(iv) The owner or operator shall use Equation 8 of this section to adjust pollutant concentrations to 0-percent $O_2$ or 0-percent excess air.

(i) The owner or operator shall determine compliance with the $SO_2$ and $NO_X$ emissions limits in § 60.102a(g) for a fuel gas combustion device according to the following test methods and procedures:

(1) Method 1 of appendix A-1 to part 60 for sample and velocity traverses;

(2) Method 2 of appendix A-1 to part 60 for velocity and volumetric flow rate;

(3) Method 3, 3A, or 3B of appendix A-2 to part 60 for gas analysis. The method ANSI/ASME PTC 19.10-1981, “Flue and Exhaust Gas Analyses,” (incorporated by reference—see § 60.17) is an acceptable alternative to EPA Method 3B of appendix A-2 to part 60;

(4) Method 6, 6A, or 6C of appendix A-4 to part 60 to determine the $SO_2$ concentration. The method ANSI/ASME PTC 19.10-1981, “Flue and Exhaust Gas Analyses,” (incorporated by reference—see § 60.17) is an acceptable alternative to EPA Method 6 or 6A of appendix A-4 to part 60.

(i) The performance test consists of 3 valid test runs; the duration of each test run must be no less than 1 hour.

(ii) If a single fuel gas combustion device having a common source of fuel gas is monitored as allowed under § 60.107a(a)(1)(v), only one performance test is required. That is, performance tests are not required when a new affected fuel gas combustion device is added to a common source of fuel gas that previously demonstrated compliance.

(5) Method 7, 7A, 7C, 7D, or 7E of appendix A-4 to part 60 for moisture content and for the concentration of $NO_X$ calculated as $NO_2$ ; the duration of each test run must be no less than 4 hours. The method ANSI/ASME PTC 19.10-1981, “Flue and Exhaust Gas Analyses,” (incorporated by reference—see § 60.17) is an acceptable alternative to EPA Method 7 or 7C of appendix A-4 to part 60.

(6) For process heaters with a rated heat capacity between 40 and 100 MMBtu/hr that elect to demonstrate continuous compliance with a maximum excess oxygen limit as provided in § 60.107a(c)(6) or (d)(8), the owner or operator shall establish the $O_2$ operating limit or $O_2$ operating curve based on the performance test results according to the requirements in paragraph (i)(6)(i) or (ii) of this section, respectively.

(i) If a single $O_2$ operating limit will be used:

(A) Conduct the performance test following the methods provided in paragraphs (i)(1), (2), (3) and (5) of this section when the process heater is firing at no less than 70 percent of the rated heat capacity. For co-fired process heaters, conduct at least one of the test runs while the process heater is being supplied by both fuel gas and fuel oil and conduct at least one of the test runs while the process heater is being supplied solely by fuel gas.

(B) Each test will consist of three test runs. Calculate the $NO_X$ concentration for the performance test as the average of the $NO_X$ concentrations from each of the three test runs. If the $NO_X$ concentration for the performance test is less than or equal to the numerical value of the applicable $NO_X$ emissions limit (regardless of averaging time), then the test is considered to be a valid test.

(C) Determine the average $O_2$ concentration for each test run of a valid test.

(D) Calculate the $O_2$ operating limit as the average $O_2$ concentration of the three test runs from a valid test.

(ii) If an $O_2$ operating curve will be used:

(A) Conduct a performance test following the methods provided in paragraphs (i)(1), (2), (3) and (5) of this section at a representative condition for each operating range for which different $O_2$ operating limits will be established. Different operating conditions may be defined as different firing rates ( *e.g.,* above 50 percent of rated heat capacity and at or below 50 percent of rated heat capacity) and/or, for co-fired process heaters, different fuel mixtures ( *e.g.,* primarily gas fired, primarily oil fired, and equally co-fired, *i.e.,* approximately 50 percent of the input heating value is from fuel gas and approximately 50 percent of the input heating value is from fuel oil). Performance tests for different operating ranges may be conducted at different times.

(B) Each test will consist of three test runs. Calculate the $NO_X$ concentration for the performance test as the average of the $NO_X$ concentrations from each of the three test runs. If the $NO_X$ concentration for the performance test is less than or equal to the numerical value of the applicable $NO_X$ emissions limit (regardless of averaging time), then the test is considered to be a valid test.

(C) If an operating curve is developed for different firing rates, conduct at least one test when the process heater is firing at no less than 70 percent of the rated heat capacity and at least one test under turndown conditions ( *i.e.,* when the process heater is firing at 50 percent or less of the rated heat capacity). If $O_2$ operating limits are developed for co-fired process heaters based only on overall firing rates (and not by fuel mixtures), conduct at least one of the test runs for each test while the process heater is being supplied by both fuel gas and fuel oil and conduct at least one of the test runs while the process heater is being supplied solely by fuel gas.

(D) Determine the average $O_2$ concentration for each test run of a valid test.

(E) Calculate the $O_2$ operating limit for each operating range as the average $O_2$ concentration of the three test runs from a valid test conducted at the representative conditions for that given operating range.

(F) Identify the firing rates for which the different operating limits apply. If only two operating limits are established based on firing rates, the $O_2$ operating limits established when the process heater is firing at no less than 70 percent of the rated heat capacity must apply when the process heater is firing above 50 percent of the rated heat capacity and the $O_2$ operating limits established for turndown conditions must apply when the process heater is firing at 50 percent or less of the rated heat capacity.

(G) Operating limits associated with each interval will be valid for 2 years or until another operating limit is established for that interval based on a more recent performance test specific for that interval, whichever occurs first. Owners and operators must use the operating limits determined for a given interval based on the most recent performance test conducted for that interval.

(7) The owner or operator of a process heater complying with a $NO_X$ limit in terms of lb/MMBtu as provided in § 60.102a(g)(2)(i)(B), (g)(2)(ii)(B), (g)(2)(iii)(B) or (g)(2)(iv)(B) or a process heater with a rated heat capacity between 40 and 100 MMBtu/hr that elects to demonstrate continuous compliance with a maximum excess $O_2$ limit, as provided in § 60.107a(c)(6) or (d)(8), shall determine heat input to the process heater in MMBtu/hr during each performance test run by measuring fuel gas flow rate, fuel oil flow rate (as applicable) and heating value content according to the methods provided in § 60.107a(d)(5), (d)(6), and (d)(4) or (d)(7), respectively.

(8) The owner or operator shall use Equation 8 of this section to adjust pollutant concentrations to 0-percent $O_2$ or 0-percent excess air.

(j) The owner or operator shall determine compliance with the applicable $H_2$ S emissions limit in § 60.102a(g)(1) for a fuel gas combustion device or the concentration requirement in § 60.103a(h) for a flare according to the following test methods and procedures:

(1) Method 1 of appendix A-1 to part 60 for sample and velocity traverses;

(2) Method 2 of appendix A-1 to part 60 for velocity and volumetric flow rate;

(3) Method 3, 3A, or 3B of appendix A-2 to part 60 for gas analysis. The method ANSI/ASME PTC 19.10-1981, “Flue and Exhaust Gas Analyses,” (incorporated by reference—see § 60.17) is an acceptable alternative to EPA Method 3B of appendix A-2 to part 60;

(4) EPA Method 11, 15 or 15A of Appendix A-5 to part 60 or EPA Method 16 of Appendix A-6 to part 60 for determining the $H_2$ S concentration for affected facilities using an $H_2$ S monitor as specified in § 60.107a(a)(2). The method ANSI/ASME PTC 19.10-1981 (incorporated by reference—see § 60.17) is an acceptable alternative to EPA Method 15A of Appendix A-5 to part 60. The owner or operator may demonstrate compliance based on the mixture used in the fuel gas combustion device or flare or for each individual fuel gas stream used in the fuel gas combustion device or flare.

(i) For Method 11 of appendix A-5 to part 60, the sampling time and sample volume must be at least 10 minutes and 0.010 dscm (0.35 dscf). Two samples of equal sampling times must be taken at about 1-hour intervals. The arithmetic average of these two samples constitutes a run. For most fuel gases, sampling times exceeding 20 minutes may result in depletion of the collection solution, although fuel gases containing low concentrations of $H_2$ S may necessitate sampling for longer periods of time.

(ii) For Method 15 of appendix A-5 to part 60, at least three injects over a 1-hour period constitutes a run.

(iii) For Method 15A of appendix A-5 to part 60, a 1-hour sample constitutes a run. The method ANSI/ASME PTC 19.10-1981, “Flue and Exhaust Gas Analyses,” (incorporated by reference—see § 60.17) is an acceptable alternative to EPA Method 15A of appendix A-5 to part 60.

(iv) If monitoring is conducted at a single point in a common source of fuel gas as allowed under § 60.107a(a)(2)(iv), only one performance test is required. That is, performance tests are not required when a new affected fuel gas combustion device or flare is added to a common source of fuel gas that previously demonstrated compliance.

[73 FR 35867, June 24, 2008, as amended at 77 FR 56470, Sep. 12, 2012]

**§ 60.105a Monitoring of emissions and operations for fluid catalytic cracking units (FCCU) and fluid coking units (FCU).**

(a) *FCCU and FCU subject to PM emissions limit* . Each owner or operator subject to the provisions of this subpart shall monitor each FCCU and FCU subject to the PM emissions limit in § 60.102a(b)(1) according to the requirements in paragraph (b), (c), (d), or (e) of this section.

(b) *Control device operating parameters.* Each owner or operator of a FCCU or FCU subject to the PM per coke burn-off emissions limit in § 60.102a(b)(1) that uses a control device other than fabric filter or cyclone shall comply with the requirements in paragraphs (b)(1) and (2) of this section.

(1) The owner or operator shall install, operate and maintain continuous parameter monitor systems (CPMS) to measure and record operating parameters for each control device according to the applicable requirements in paragraphs (b)(1)(i) through (v) of this section.

(i) For units controlled using an electrostatic precipitator, the owner or operator shall use CPMS to measure and record the hourly average total power input and secondary voltage to the entire system.

(ii) For units controlled using a wet scrubber, the owner or operator shall use CPMS to measure and record the hourly average pressure drop, liquid feed rate, and exhaust gas flow rate. As an alternative to a CPMS, the owner or operator must comply with the requirements in either paragraph (b)(1)(ii)(A) or (B) of this section.

(A) As an alternative to pressure drop, the owner or operator of a jet ejector type wet scrubber or other type of wet scrubber equipped with atomizing spray nozzles must conduct a daily check of the air or water pressure to the spray nozzles and record the results of each check.

(B) As an alternative to exhaust gas flow rate, the owner or operator shall comply with the approved alternative for monitoring exhaust gas flow rate in 40 CFR 63.1573(a) of the National Emission Standards for Hazardous Air Pollutants for Petroleum Refineries: Catalytic Cracking Units, Catalytic Reforming Units, and Sulfur Recovery Units.

(iii) The owner or operator shall install, operate, and maintain each CPMS according to the manufacturer's specifications and requirements.

(iv) The owner or operator shall determine and record the average coke burn-off rate and hours of operation for each FCCU or FCU using the procedures in § 60.104a(d)(4)(iii).

(v) If you use a control device other than an electrostatic precipitator, wet scrubber, fabric filter, or cyclone, you may request approval to monitor parameters other than those required in paragraph (b)(1) of this section by submitting an alternative monitoring plan to the Administrator. The request must include the information in paragraphs (b)(1)(v)(A) through (E) of this section.

(A) A description of each affected facility and the parameter(s) to be monitored to determine whether the affected facility will continuously comply with the emission limitations and an explanation of the criteria used to select the parameter(s).

(B) A description of the methods and procedures that will be used to demonstrate that the parameter(s) can be used to determine whether the affected facility will continuously comply with the emission limitations and the schedule for this demonstration. The owner or operator must certify that an operating limit will be established for the monitored parameter(s) that represents the conditions in existence when the control device is being properly operated and maintained to meet the emission limitation.

(C) The frequency and content of the recordkeeping, recording, and reporting, if monitoring and recording are not continuous. The owner or operator also must include the rationale for the proposed monitoring, recording, and reporting requirements.

(D) Supporting calculations.

(E) Averaging time for the alternative operating parameter.

(2) For use in determining the coke burn-off rate for an FCCU or FCU, the owner or operator shall install, operate, calibrate, and maintain an instrument for continuously monitoring the concentrations of $CO_2$ , $O_2$ (dry basis), and if needed, CO in the exhaust gases prior to any control or energy recovery system that burns auxiliary fuels.

(i) The owner or operator shall install, operate and maintain each monitor according to Performance Specifications 3 and 4 of Appendix B to part 60.

(ii) The owner or operator shall conduct performance evaluations of each $CO_2$ , $O_2$ and CO monitor according to the requirements in § 60.13(c) and Performance Specifications 3 and 4 of Appendix B to part 60. The owner or operator shall use EPA Method 3 of Appendix A-3 to part 60 and EPA Method 10, 10A or 10B of Appendix A-4 to part 60 for conducting the relative accuracy evaluations.

(iii) The owner or operator shall comply with the quality assurance requirements of procedure 1 of appendix F to part 60, including quarterly accuracy determinations for $CO_2$ and CO monitors, annual accuracy determinations for $O_2$ monitors, and daily calibration drift tests.

(c) *Bag leak detection systems* . Each owner or operator shall install, operate, and maintain a bag leak detection system for each baghouse or similar fabric filter control device that is used to comply with the PM per coke burn-off emissions limit in § 60.102a(b)(1) for an FCCU or FCU according to paragraph (c)(1) of this section; prepare and operate by a site-specific monitoring plan according to paragraph (c)(2) of this section; take action according to paragraph (c)(3) of this section; and record information according to paragraph (c)(4) of this section.

(1) Each bag leak detection system must meet the specifications and requirements in paragraphs (c)(1)(i) through (viii) of this section.

(i) The bag leak detection system must be certified by the manufacturer to be capable of detecting PM emissions at concentrations of 0.00044 grains per actual cubic foot or less.

(ii) The bag leak detection system sensor must provide output of relative PM loadings. The owner or operator shall continuously record the output from the bag leak detection system using electronic or other means (e.g., using a strip chart recorder or a data logger).

(iii) The bag leak detection system must be equipped with an alarm system that will sound when the system detects an increase in relative particulate loading over the alarm set point established according to paragraph (c)(1)(iv) of this section, and the alarm must be located such that it can be heard by the appropriate plant personnel.

(iv) In the initial adjustment of the bag leak detection system, the owner or operator must establish, at a minimum, the baseline output by adjusting the sensitivity (range) and the averaging period of the device, the alarm set points, and the alarm delay time.

(v) Following initial adjustment, the owner or operator shall not adjust the averaging period, alarm set point, or alarm delay time without approval from the Administrator or delegated authority except as provided in paragraph (c)(1)(vi) of this section.

(vi) Once per quarter, the owner or operator may adjust the sensitivity of the bag leak detection system to account for seasonal effects, including temperature and humidity, according to the procedures identified in the site-specific monitoring plan required by paragraph (c)(2) of this section.

(vii) The owner or operator shall install the bag leak detection sensor downstream of the baghouse and upstream of any wet scrubber.

(viii) Where multiple detectors are required, the system's instrumentation and alarm may be shared among detectors.

(2) The owner or operator shall develop and submit to the Administrator for approval a site-specific monitoring plan for each baghouse and bag leak detection system. The owner or operator shall operate and maintain each baghouse and bag leak detection system according to the site-specific monitoring plan at all times. Each monitoring plan must describe the items in paragraphs (c)(2)(i) through (vii) of this section.

(i) Installation of the bag leak detection system;

(ii) Initial and periodic adjustment of the bag leak detection system, including how the alarm set-point will be established;

(iii) Operation of the bag leak detection system, including quality assurance procedures;

(iv) How the bag leak detection system will be maintained, including a routine maintenance schedule and spare parts inventory list;

(v) How the bag leak detection system output will be recorded and stored;

(vi) Procedures as specified in paragraph (c)(3) of this section. In approving the site-specific monitoring plan, the Administrator or delegated authority may allow owners and operators more than 3 hours to alleviate a specific

condition that causes an alarm if the owner or operator identifies in the monitoring plan this specific condition as one that could lead to an alarm, adequately explains why it is not feasible to alleviate this condition within 3 hours of the time the alarm occurs, and demonstrates that the requested time will ensure alleviation of this condition as expeditiously as practicable; and

(vii) How the baghouse system will be operated and maintained, including monitoring of pressure drop across baghouse cells and frequency of visual inspections of the baghouse interior and baghouse components such as fans and dust removal and bag cleaning mechanisms.

(3) For each bag leak detection system, the owner or operator shall initiate procedures to determine the cause of every alarm within 1 hour of the alarm. Except as provided in paragraph (c)(2)(vi) of this section, the owner or operator shall alleviate the cause of the alarm within 3 hours of the alarm by taking whatever action(s) are necessary. Actions may include, but are not limited to the following:

(i) Inspecting the baghouse for air leaks, torn or broken bags or filter media, or any other condition that may cause an increase in particulate emissions;

(ii) Sealing off defective bags or filter media;

(iii) Replacing defective bags or filter media or otherwise repairing the control device;

(iv) Sealing off a defective baghouse compartment;

(v) Cleaning the bag leak detection system probe or otherwise repairing the bag leak detection system; or

(vi) Shutting down the process producing the particulate emissions.

(4) The owner or operator shall maintain records of the information specified in paragraphs (c)(4)(i) through (iii) of this section for each bag leak detection system.

(i) Records of the bag leak detection system output;

(ii) Records of bag leak detection system adjustments, including the date and time of the adjustment, the initial bag leak detection system settings, and the final bag leak detection system settings; and

(iii) The date and time of all bag leak detection system alarms, the time that procedures to determine the cause of the alarm were initiated, the cause of the alarm, an explanation of the actions taken, the date and time the cause of the alarm was alleviated, and whether the alarm was alleviated within 3 hours of the alarm.

(d) *Continuous emissions monitoring systems (CEMS)* . An owner or operator subject to the PM concentration emission limit (in gr/dscf) in § 60.102a(b)(1) for an FCCU or FCU shall install, operate, calibrate, and maintain an instrument for continuously monitoring and recording the concentration (0 percent excess air) of PM in the exhaust gases prior to release to the atmosphere. The monitor must include an $O_2$ monitor for correcting the data for excess air.

(1) The owner or operator shall install, operate, and maintain each PM monitor according to Performance Specification 11 of appendix B to part 60. The span value of this PM monitor is 0.08 gr/dscf PM.

(2) The owner or operator shall conduct performance evaluations of each PM monitor according to the requirements in § 60.13(c) and Performance Specification 11 of appendix B to part 60. The owner or operator shall use EPA Methods 5 or 5I of appendix A-3 to part 60 or Method 17 of appendix A-6 to part 60 for conducting the relative accuracy evaluations.

(3) The owner or operator shall install, operate, and maintain each $O_2$ monitor according to Performance Specification 3 of appendix B to part 60. The span value of this $O_2$ monitor must be selected between 10 and 25 percent, inclusive.

(4) The owner or operator shall conduct performance evaluations of each $O_2$ monitor according to the requirements in § 60.13(c) and Performance Specification 3 of appendix B to part 60. Method 3, 3A, or 3B of appendix A-2 to part 60 shall be used for conducting the relative accuracy evaluations. The method ANSI/ASME PTC 19.10-1981, “Flue and Exhaust Gas Analyses,” (incorporated by reference—see § 60.17) is an acceptable alternative to EPA Method 3B of appendix A-2 to part 60.

(5) The owner or operator shall comply with the quality assurance requirements of Procedure 2 of appendix B to part 60 for each PM CEMS and Procedure 1 of appendix F to part 60 for each $O_2$ monitor, including quarterly accuracy determinations for each PM monitor, annual accuracy determinations for each $O_2$ monitor, and daily calibration drift tests.

(e) *Alternative monitoring option for FCCU and FCU—COMS* . Each owner or operator of an FCCU or FCU that uses cyclones to comply with the PM emission limit in § 60.102a(b)(1) shall monitor the opacity of emissions according to the requirements in paragraphs (e)(1) through (3) of this section.

(1) The owner or operator shall install, operate, and maintain an instrument for continuously monitoring and recording the opacity of emissions from the FCCU or the FCU exhaust vent.

(2) The owner or operator shall install, operate, and maintain each COMS according to Performance Specification 1 of appendix B to part 60. The instrument shall be spanned at 20 to 60 percent opacity.

(3) The owner or operator shall conduct performance evaluations of each COMS according to § 60.13(c) and Performance Specification 1 of appendix B to part 60.

(f) *FCCU and FCU subject to $NO_X$ limit* . Each owner or operator subject to the $NO_X$ emissions limit in § 60.102a(b)(2) for an FCCU or FCU shall install, operate, calibrate, and maintain an instrument for continuously monitoring and recording the concentration by volume (dry basis, 0 percent excess air) of $NO_X$ emissions into the atmosphere. The monitor must include an $O_2$ monitor for correcting the data for excess air.

(1) The owner or operator shall install, operate, and maintain each $NO_X$ monitor according to Performance Specification 2 of appendix B to part 60. The span value of this $NO_X$ monitor is 200 ppmv $NO_X$ .

(2) The owner or operator shall conduct performance evaluations of each $NO_X$ monitor according to the requirements in § 60.13(c) and Performance Specification 2 of appendix B to part 60. The owner or operator shall use Methods 7, 7A, 7C, 7D, or 7E of appendix A-4 to part 60 for conducting the relative accuracy evaluations. The method ANSI/ASME PTC 19.10-1981, “Flue and Exhaust Gas Analyses,” (incorporated by reference—see § 60.17) is an acceptable alternative to EPA Method 7 or 7C of appendix A-4 to part 60.

(3) The owner or operator shall install, operate, and maintain each $O_2$ monitor according to Performance Specification 3 of appendix B to part 60. The span value of this $O_2$ monitor must be selected between 10 and 25 percent, inclusive.

(4) The owner or operator shall conduct performance evaluations of each $O_2$ monitor according to the requirements in § 60.13(c) and Performance Specification 3 of appendix B to part 60. Method 3, 3A, or 3B of appendix A-2 to part 60 shall be used for conducting the relative accuracy evaluations. The method ANSI/ASME PTC 19.10-1981, “Flue and Exhaust Gas Analyses,” (incorporated by reference—see § 60.17) is an acceptable alternative to EPA Method 3B of appendix A-2 to part 60.

(5) The owner or operator shall comply with the quality assurance requirements of Procedure 1 of appendix F to part 60 for each $NO_X$ and $O_2$ monitor, including quarterly accuracy determinations for $NO_X$ monitors, annual accuracy determinations for $O_2$ monitors, and daily calibration drift tests.

(g) *FCCU and FCU subject to $SO_2$ limit* . The owner or operator subject to the $SO_2$ emissions limit in § 60.102a(b)(3) for an FCCU or an FCU shall install, operate, calibrate, and maintain an instrument for continuously monitoring and recording the concentration by volume (dry basis, corrected to 0 percent excess air) of $SO_2$ emissions into the atmosphere. The monitor shall include an $O_2$ monitor for correcting the data for excess air.

(1) The owner or operator shall install, operate, and maintain each $SO_2$ monitor according to Performance Specification 2 of appendix B to part 60. The span value of this $SO_2$ monitor is 200 ppmv $SO_2$ .

(2) The owner or operator shall conduct performance evaluations of each $SO_2$ monitor according to the requirements in § 60.13(c) and Performance Specification 2 of appendix B to part 60. The owner or operator shall use Methods 6, 6A, or 6C of appendix A-4 to part 60 for conducting the relative accuracy evaluations. The method ANSI / ASME PTC 19.10-1981, “Flue and Exhaust Gas Analyses,” (incorporated by reference—see § 60.17) is an acceptable alternative to EPA Method 6 or 6A of appendix A-4 to part 60.

(3) The owner or operator shall install, operate, and maintain each $O_2$ monitor according to Performance Specification 3 of appendix B to part 60. The span value of this $O_2$ monitor must be selected between 10 and 25 percent, inclusive.

(4) The owner or operator shall conduct performance evaluations of each $O_2$ monitor according to the requirements in § 60.13(c) and Performance Specification 3 of appendix B to part 60. Method 3, 3A, or 3B of appendix A-2 to part 60 shall be used for conducting the relative accuracy evaluations. The method ANSI/ASME PTC 19.10-1981, “Flue and Exhaust Gas Analyses,” (incorporated by reference—see § 60.17) is an acceptable alternative to EPA Method 3B of appendix A-2 to part 60.

(5) The owner or operator shall comply with the quality assurance requirements in Procedure 1 of appendix F to part 60 for each $SO_2$ and $O_2$ monitor, including quarterly accuracy determinations for $SO_2$ monitors, annual accuracy determinations for $O_2$ monitors, and daily calibration drift tests.

(h) *FCCU and fluid coking units subject to CO emissions limit* . Except as specified in paragraph (h)(3) of this section, the owner or operator shall install, operate, calibrate, and maintain an instrument for continuously monitoring and recording the concentration by volume (dry basis) of CO emissions into the atmosphere from each FCCU and FCU subject to the CO emissions limit in § 60.102a(b)(4).

(1) The owner or operator shall install, operate, and maintain each CO monitor according to Performance Specification 4 or 4A of appendix B to part 60. The span value for this instrument is 1,000 ppm CO.

(2) The owner or operator shall conduct performance evaluations of each CO monitor according to the requirements in § 60.13(c) and Performance Specification 4 or 4A of appendix B to part 60. The owner or operator shall use Methods 10, 10A, or 10B of appendix A-4 to part 60 for conducting the relative accuracy evaluations.

(3) A CO CEMS need not be installed if the owner or operator demonstrates that all hourly average CO emissions are and will remain less than 50 ppmv (dry basis) corrected to 0 percent excess air. The Administrator may revoke this exemption from monitoring upon a determination that CO emissions on an hourly average basis have exceeded 50 ppmv (dry basis) corrected to 0 percent excess air, in which case a CO CEMS shall be installed within 180 days.

(i) The demonstration shall consist of continuously monitoring CO emissions for 30 days using an instrument that meets the requirements of Performance Specification 4 or 4A of appendix B to part 60. The span value shall be 100 ppm CO instead of 1,000 ppm, and the relative accuracy limit shall be 10 percent of the average CO emissions or 5 ppm CO, whichever is greater. For instruments that are identical to Method 10 of appendix A-4 to part 60 and employ the sample conditioning system of Method 10A of appendix A-4 to part 60, the alternative relative accuracy test procedure in section 10.1 of Performance Specification 2 of appendix B to part 60 may be used in place of the relative accuracy test.

(ii) The owner or operator must submit the following information to the Administrator:

(A) The measurement data specified in paragraph (h)(3)(i) of this section along with all other operating data known to affect CO emissions; and

(B) Descriptions of the CPMS for exhaust gas temperature and $O_2$ monitor required in paragraph (h)(4) of this section and operating limits for those parameters to ensure combustion conditions remain similar to those that exist during the demonstration period.

(iii) The effective date of the exemption from installation and operation of a CO CEMS is the date of submission of the information and data required in paragraph (h)(3)(ii) of this section.

(4) The owner or operator of a FCCU or FCU that is exempted from the requirement to install and operate a CO CEMS in paragraph (h)(3) of this section shall install, operate, calibrate, and maintain CPMS to measure and record the operating parameters in paragraph (h)(4)(i) or (ii) of this section. The owner or operator shall install, operate, and maintain each CPMS according to the manufacturer's specifications.

(i) For a FCCU or FCU with no post-combustion control device, the temperature and $O_2$ concentration of the exhaust gas stream exiting the unit.

(ii) For a FCCU or FCU with a post-combustion control device, the temperature and $O_2$ concentration of the exhaust gas stream exiting the control device.

(i) *Excess emissions* . For the purpose of reports required by § 60.7(c), periods of excess emissions for a FCCU or FCU subject to the emissions limitations in § 60.102a(b) are defined as specified in paragraphs (i)(1) through (6) of this section. Note: Determine all averages, except for opacity, as the arithmetic average of the applicable 1-hour averages, *e.g.* , determine the rolling 3-hour average as the arithmetic average of three contiguous 1-hour averages.

(1) If a CPMS is used according to § 60.105a(b)(1), all 3-hour periods during which the average PM control device operating characteristics, as measured by the continuous monitoring systems under § 60.105a(b)(1), fall below the levels established during the performance test.

(2) If a PM CEMS is used according to § 60.105a(d), all 7-day periods during which the average PM emission rate, as measured by the continuous PM monitoring system under § 60.105a(d) exceeds 0.040 gr/dscf corrected to 0 percent excess air for a modified or reconstructed FCCU, 0.020 gr/dscf corrected to 0 percent excess air for a newly constructed FCCU, or 0.040 gr/dscf for an affected fluid coking unit.

(3) If a COMS is used according to § 60.105a(e), all 3-hour periods during which the average opacity, as measured by the COMS under § 60.105a(e), exceeds the site-specific limit established during the most recent performance test.

(4) All rolling 7-day periods during which the average concentration of $NO_X$ as measured by the $NO_X$ CEMS under § 60.105a(f) exceeds 80 ppmv for an affected FCCU or FCU.

(5) All rolling 7-day periods during which the average concentration of $SO_2$ as measured by the $SO_2$ CEMS under § 60.105a(g) exceeds 50 ppmv, and all rolling 365-day periods during which the average concentration of $SO_2$ as measured by the $SO_2$ CEMS exceeds 25 ppmv.

(6) All 1-hour periods during which the average CO concentration as measured by the CO continuous monitoring system under § 1A60.105a(h) exceeds 500 ppmv or, if applicable, all 1-hour periods during which the average temperature and $O_2$ concentration as measured by the continuous monitoring systems under § 60.105a(h)(4) fall below the operating limits established during the performance test.

[73 FR 35867, June 24, 2008, as amended at 77 FR 56473, Sep. 12, 2012]

**§ 60.106a Monitoring of emissions and operations for sulfur recovery plants.**

(a) The owner or operator of a sulfur recovery plant that is subject to the emissions limits in § 60.102a(f)(1) or § 60.102a(f)(2) shall:

(1) For sulfur recovery plants subject to the $SO_2$ emission limit in § 60.102a(f)(1)(i) or § 60.102a(f)(2)(i), the owner or operator shall install, operate, calibrate, and maintain an instrument for continuously monitoring and recording the concentration (dry basis, zero percent excess air) of any $SO_2$ emissions into the atmosphere. The monitor shall include an oxygen monitor for correcting the data for excess air.

(i) The span values for this monitor are two times the applicable $SO_2$ emission limit and between 10 and 25 percent $O_2$ , inclusive.

(ii) The owner or operator shall install, operate, and maintain each $SO_2$ CEMS according to Performance Specification 2 of appendix B to part 60.

(iii) The owner or operator shall conduct performance evaluations of each $SO_2$ monitor according to the requirements in § 60.13(c) and Performance Specification 2 of appendix B to part 60. The owner or operator shall use Methods 6 or 6C of appendix A-4 to part 60 and Method 3 or 3A of appendix A-2 of part 60 for conducting the relative accuracy evaluations. The method ANSI/ASME PTC 19.10-1981, “Flue and Exhaust Gas Analyses,” (incorporated by reference—see § 60.17) is an acceptable alternative to EPA Method 6.

(2) For sulfur recovery plants that are subject to the reduced sulfur compound and $H_2$ S emission limit in § 60.102a(f)(1)(ii) or § 60.102a(f)(2)(ii), the owner or operator shall install, operate, calibrate, and maintain an instrument for continuously monitoring and recording the concentration of reduced sulfur, $H_2$ S, and $O_2$ emissions into the atmosphere. The reduced sulfur emissions shall be calculated as $SO_2$ (dry basis, zero percent excess air).

(i) The span values for this monitor are two times the applicable reduced sulfur emission limit, two times the $H_2$ S emission limit, and between 10 and 25 percent $O_2$ , inclusive.

(ii) The owner or operator shall install, operate, and maintain each reduced sulfur CEMS according to Performance Specification 5 of appendix B to part 60.

(iii) The owner or operator shall conduct performance evaluations of each reduced sulfur monitor according to the requirements in § 60.13(c) and Performance Specification 5 of appendix B to part 60. The owner or operator shall use Methods 15 or 15A of appendix A-5 to part 60 for conducting the relative accuracy evaluations. The method ANSI/ASME PTC 19.10-1981, “Flue and Exhaust Gas Analyses,” (incorporated by reference—see § 60.17) is an acceptable alternative to EPA Method 15A of appendix A-5 to part 60.

(iv) The owner or operator shall install, operate, and maintain each $H_2$ S CEMS according to Performance Specification 7 of appendix B to part 60.

(v) The owner or operator shall conduct performance evaluations of each reduced sulfur monitor according to the requirements in § 60.13(c) and Performance Specification 5 of appendix B to part 60. The owner or operator shall use Methods 11, 15, or 15A of appendix A-5 to part 60 or Method 16 of appendix A-6 to part 60 for conducting the relative accuracy evaluations. The method ANSI/ASME PTC 19.10-1981, “Flue and Exhaust Gas Analyses,” (incorporated by reference—see § 60.17) is an acceptable alternative to EPA Method 15A of appendix A-5 to part 60.

(vi) The owner or operator shall install, operate, and maintain each $O_2$ monitor according to Performance Specification 3 of appendix B to part 60.

(vii) The span value for the $O_2$ monitor must be selected between 10 and 25 percent, inclusive.

(viii) The owner or operator shall conduct performance evaluations for the $O_2$ monitor according to the requirements of § 60.13(c) and Performance Specification 3 of appendix B to part 60. The owner or operator shall use Methods 3, 3A, or 3B of appendix A-2 to part 60 for conducting the relative accuracy evaluations. The method ANSI/ASME PTC 19.10-1981, “Flue and Exhaust Gas Analyses,” (incorporated by reference—see § 60.17) is an acceptable alternative to EPA Method 3B of appendix A-2 to part 60.

(ix) The owner or operator shall comply with the applicable quality assurance procedures of appendix F to part 60 for each monitor, including annual accuracy determinations for each $O_2$ monitor, and daily calibration drift determinations.

(3) In place of the reduced sulfur monitor required in paragraph (a)(2) of this section, the owner or operator shall install, calibrate, operate, and maintain an instrument using an air or $O_2$ dilution and oxidation system to convert any reduced sulfur to $SO_2$ for continuously monitoring and recording the concentration (dry basis, 0 percent excess air) of the total resultant $SO_2$ . The monitor must include an $O_2$ monitor for correcting the data for excess $O_2$ .

(i) The span value for this monitor is two times the applicable $SO_2$ emission limit.

(ii) The owner or operator shall conduct performance evaluations of each $SO_2$ monitor according to the requirements in § 60.13(c) and Performance Specification 5 of appendix B to part 60. The owner or operator shall use Methods 15 or 15A of appendix A-5 to part 60 for conducting the relative accuracy evaluations. The method ANSI/ASME PTC 19.10-1981, "Flue and Exhaust Gas Analyses," (incorporated by reference—see § 60.17) is an acceptable alternative to EPA Method 15A of appendix A-5 to part 60.

(iii) The owner or operator shall install, operate, and maintain each $O_2$ monitor according to Performance Specification 3 of appendix B to part 60.

(iv) The span value for the $O_2$ monitor must be selected between 10 and 25 percent, inclusive.

(v) The owner or operator shall conduct performance evaluations for the $O_2$ monitor according to the requirements of § 60.13(c) and Performance Specification 3 of appendix B to part 60. The owner or operator shall use Methods 3, 3A, or 3B of appendix A-2 to part 60 for conducting the relative accuracy evaluations. The method ANSI/ASME PTC 19.10-1981, "Flue and Exhaust Gas Analyses," (incorporated by reference—see § 60.17) is an acceptable alternative to EPA Method 3B of appendix A-2 to part 60.

(vi) The owner or operator shall comply with the applicable quality assurance procedures of appendix F to part 60 for each monitor, including quarterly accuracy determinations for each $SO_2$ monitor, annual accuracy determinations for each $O_2$ monitor, and daily calibration drift determinations.

(b) *Excess emissions* . For the purpose of reports required by § 60.7(c), periods of excess emissions for sulfur recovery plants subject to the emissions limitations in § 60.102a(f) are defined as specified in paragraphs (b)(1) through (3) of this section. NOTE: Determine all averages as the arithmetic average of the applicable 1-hour averages, e.g., determine the rolling 12-hour average as the arithmetic average of 12 contiguous 1-hour averages.

(1) All 12-hour periods during which the average concentration of $SO_2$ as measured by the $SO_2$ continuous monitoring system required under paragraph (a)(1) of this section exceeds the applicable emission limit (dry basis, zero percent excess air); or

(2) All 12-hour periods during which the average concentration of reduced sulfur (as $SO_2$ ) as measured by the reduced sulfur continuous monitoring system required under paragraph (a)(2) of this section exceeds the applicable emission limit; or

(3) All 12-hour periods during which the average concentration of $H_2$ S as measured by the $H_2$ S continuous monitoring system required under paragraph (a)(2) of this section exceeds the applicable emission limit (dry basis, 0 percent excess air).

**§ 60.107a Monitoring of emissions and operations for fuel gas combustion devices and flares.**

(a) *Fuel gas combustion devices subject to* $SO_2$ or $H_2$ S *limit and flares subject to* $H_2$ S *concentration requirements.* The owner or operator of a fuel gas combustion device that is subject to § 60.102a(g)(1) and elects to comply with the $SO_2$ emission limits in § 60.102a(g)(1)(i) shall comply with the requirements in paragraph (a)(1) of this section. The owner or operator of a fuel gas combustion device that is subject to § 60.102a(g)(1) and elects to comply with the $H_2$ S concentration limits in § 60.102a(g)(1)(ii) or a flare that is subject to the $H_2$ S concentration requirement in § 60.103a(h) shall comply with paragraph (a)(2) of this section.

(1) The owner or operator of a fuel gas combustion device that elects to comply with the $SO_2$ emissions limits in § 60.102a(g)(1)(i) shall install, operate, calibrate and maintain an instrument for continuously monitoring and recording the concentration (dry basis, 0-percent excess air) of $SO_2$ emissions into the atmosphere. The monitor must include an $O_2$ monitor for correcting the data for excess air.

(i) The owner or operator shall install, operate, and maintain each $SO_2$ monitor according to Performance Specification 2 of appendix B to part 60. The span value for the $SO_2$ monitor is 50 ppm $SO_2$ .

(ii) The owner or operator shall conduct performance evaluations for the $SO_2$ monitor according to the requirements of § 60.13(c) and Performance Specification 2 of appendix B to part 60. The owner or operator shall use Methods 6, 6A, or 6C of appendix A-4 to part 60 for conducting the relative accuracy evaluations. The method ANSI/ASME PTC

19.10-1981, “Flue and Exhaust Gas Analyses,” (incorporated by reference—see § 60.17) is an acceptable alternative to EPA Method 6 or 6A of appendix A-4 to part 60. Samples taken by Method 6 of appendix A-4 to part 60 shall be taken at a flow rate of approximately 2 liters/min for at least 30 minutes. The relative accuracy limit shall be 20 percent or 4 ppm, whichever is greater, and the calibration drift limit shall be 5 percent of the established span value.

(iii) The owner or operator shall install, operate, and maintain each $O_2$ monitor according to Performance Specification 3 of appendix B to part 60. The span value for the $O_2$ monitor must be selected between 10 and 25 percent, inclusive.

(iv) The owner or operator shall conduct performance evaluations for the $O_2$ monitor according to the requirements of § 60.13(c) and Performance Specification 3 of appendix B to part 60. The owner or operator shall use Methods 3, 3A, or 3B of appendix A-2 to part 60 for conducting the relative accuracy evaluations. The method ANSI/ASME PTC 19.10-1981, “Flue and Exhaust Gas Analyses,” (incorporated by reference—see § 60.17) is an acceptable alternative to EPA Method 3B of appendix A-2 to part 60.

(v) The owner or operator shall comply with the applicable quality assurance procedures in appendix F to part 60, including quarterly accuracy determinations for $SO_2$ monitors, annual accuracy determinations for $O_2$ monitors, and daily calibration drift tests.

(vi) Fuel gas combustion devices having a common source of fuel gas may be monitored at only one location (i.e., after one of the combustion devices), if monitoring at this location accurately represents the $SO_2$ emissions into the atmosphere from each of the combustion devices.

(2) The owner or operator of a fuel gas combustion device that elects to comply with the $H_2$ S concentration limits in § 60.102a(g)(1)(ii) or a flare that is subject to the $H_2$ S concentration requirement in § 60.103a(h) shall install, operate, calibrate and maintain an instrument for continuously monitoring and recording the concentration by volume (dry basis) of $H_2$ S in the fuel gases before being burned in any fuel gas combustion device or flare.

(i) The owner or operator shall install, operate and maintain each $H_2$ S monitor according to Performance Specification 7 of Appendix B to part 60. The span value for this instrument is 300 ppmv $H_2$ S.

(ii) The owner or operator shall conduct performance evaluations for each $H_2$ S monitor according to the requirements of § 60.13(c) and Performance Specification 7 of appendix B to part 60. The owner or operator shall use Method 11, 15, or 15A of appendix A-5 to part 60 or Method 16 of appendix A-6 to part 60 for conducting the relative accuracy evaluations. The method ANSI/ASME PTC 19.10-1981, “Flue and Exhaust Gas Analyses,” (incorporated by reference—see § 60.17) is an acceptable alternative to EPA Method 15A of appendix A-5 to part 60.

(iii) The owner or operator shall comply with the applicable quality assurance procedures in appendix F to part 60 for each $H_2$ S monitor.

(iv) Fuel gas combustion devices or flares having a common source of fuel gas may be monitored at only one location, if monitoring at this location accurately represents the concentration of $H_2$ S in the fuel gas being burned in the respective fuel gas combustion devices or flares.

(v) The owner or operator of a flare subject to § 60.103a(c) through (e) may use the instrument required in paragraph (e)(1) of this section to demonstrate compliance with the $H_2$ S concentration requirement in § 60.103a(h) if the owner or operator complies with the requirements of paragraph (e)(1)(i) through (iv) and if the instrument has a span (or dual span, if necessary) capable of accurately measuring concentrations between 20 and 300 ppmv. If the instrument required in paragraph (e)(1) of this section is used to demonstrate compliance with the $H_2$ S concentration requirement, the concentration directly measured by the instrument must meet the numeric concentration in § 60.103a(h).

(vi) The owner or operator of modified flare that meets all three criteria in paragraphs (a)(2)(vi)(A) through (C) of this section shall comply with the requirements of paragraphs (a)(2)(i) through (v) of this section no later than November 11, 2015. The owner or operator shall comply with the approved alternative monitoring plan or plans pursuant to § 60.13(i) until the flare is in compliance with requirements of paragraphs (a)(2)(i) through (v) of this section.

(A) The flare was an affected facility subject to subpart J of this part prior to becoming an affected facility under § 60.100a.

(B) The owner or operator had an approved alternative monitoring plan or plans pursuant to § 60.13(i) for all fuel gases combusted in the flare.

(C) The flare did not have in place on or before September 12, 2012 an instrument for continuously monitoring and recording the concentration by volume (dry basis) of $H_2S$ in the fuel gases that is capable of complying with the requirements of paragraphs (a)(2)(i) through (v) of this section.

(3) The owner or operator of a fuel gas combustion device or flare is not required to comply with paragraph (a)(1) or (2) of this section for fuel gas streams that are exempt under §§ 60.102a(g)(1)(iii) or 60.103a(h) or, for fuel gas streams combusted in a process heater, other fuel gas combustion device or flare that are inherently low in sulfur content. Fuel gas streams meeting one of the requirements in paragraphs (a)(3)(i) through (iv) of this section will be considered inherently low in sulfur content.

(i) Pilot gas for heaters and flares.

(ii) Fuel gas streams that meet a commercial-grade product specification for sulfur content of 30 ppmv or less. In the case of a liquefied petroleum gas (LPG) product specification in the pressurized liquid state, the gas phase sulfur content should be evaluated assuming complete vaporization of the LPG and sulfur containing-compounds at the product specification concentration.

(iii) Fuel gas streams produced in process units that are intolerant to sulfur contamination, such as fuel gas streams produced in the hydrogen plant, catalytic reforming unit, isomerization unit, and HF alkylation process units.

(iv) Other fuel gas streams that an owner or operator demonstrates are low-sulfur according to the procedures in paragraph (b) of this section.

(4) If the composition of an exempt fuel gas stream changes, the owner or operator must follow the procedures in paragraph (b)(3) of this section.

(b) *Exemption from $H_2S$ monitoring requirements for low-sulfur fuel gas streams.* The owner or operator of a fuel gas combustion device or flare may apply for an exemption from the $H_2S$ monitoring requirements in paragraph (a)(2) of this section for a fuel gas stream that is inherently low in sulfur content. A fuel gas stream that is demonstrated to be low-sulfur is exempt from the monitoring requirements of paragraphs (a)(1) and (2) of this section until there are changes in operating conditions or stream composition.

(1) The owner or operator shall submit to the Administrator a written application for an exemption from monitoring. The application must contain the following information:

(i) A description of the fuel gas stream/system to be considered, including submission of a portion of the appropriate piping diagrams indicating the boundaries of the fuel gas stream/system and the affected fuel gas combustion device(s) or flare(s) to be considered;

(ii) A statement that there are no crossover or entry points for sour gas (high $H_2S$ content) to be introduced into the fuel gas stream/system (this should be shown in the piping diagrams);

(iii) An explanation of the conditions that ensure low amounts of sulfur in the fuel gas stream (i.e., control equipment or product specifications) at all times;

(iv) The supporting test results from sampling the requested fuel gas stream/system demonstrating that the sulfur content is less than 5 ppm $H_2S$. Sampling data must include, at minimum, 2 weeks of daily monitoring (14 grab samples) for frequently operated fuel gas streams/systems; for infrequently operated fuel gas streams/systems, seven grab samples must be collected unless other additional information would support reduced sampling. The owner or operator shall use detector tubes (“length-of-stain tube” type measurement) following the “Gas Processors Association Standard 2377-86, Test for Hydrogen Sulfide and Carbon Dioxide in Natural Gas Using Length of Stain

Tubes," 1986 Revision (incorporated by reference—see § 60.17), with ranges 0-10/0-100 ppm (N = 10/1) to test the applicant fuel gas stream for $H_2$ S; and

(v) A description of how the 2 weeks (or seven samples for infrequently operated fuel gas streams/systems) of monitoring results compares to the typical range of $H_2$ S concentration (fuel quality) expected for the fuel gas stream/system going to the affected fuel gas combustion device or flare ( *e.g.,* the 2 weeks of daily detector tube results for a frequently operated loading rack included the entire range of products loaded out and, therefore, should be representative of typical operating conditions affecting $H_2$ S content in the fuel gas stream going to the loading rack flare).

(2) The effective date of the exemption is the date of submission of the information required in paragraph (b)(1) of this section.

(3) No further action is required unless refinery operating conditions change in such a way that affects the exempt fuel gas stream/system (e.g., the stream composition changes). If such a change occurs, the owner or operator shall follow the procedures in paragraph (b)(3)(i), (b)(3)(ii), or (b)(3)(iii) of this section.

(i) If the operation change results in a sulfur content that is still within the range of concentrations included in the original application, the owner or operator shall conduct an $H_2$ S test on a grab sample and record the results as proof that the concentration is still within the range.

(ii) If the operation change results in a sulfur content that is outside the range of concentrations included in the original application, the owner or operator may submit new information following the procedures of paragraph (b)(1) of this section within 60 days (or within 30 days after the seventh grab sample is tested for infrequently operated process units).

(iii) If the operation change results in a sulfur content that is outside the range of concentrations included in the original application and the owner or operator chooses not to submit new information to support an exemption, the owner or operator must begin $H_2$ S monitoring using daily stain sampling to demonstrate compliance. The owner or operator must begin monitoring according to the requirements in paragraphs (a)(1) or (a)(2) of this section as soon as practicable, but in no case later than 180 days after the operation change. During daily stain tube sampling, a daily sample exceeding 162 ppmv is an exceedance of the 3-hour $H_2$ S concentration limit. The owner or operator of a fuel gas combustion device must also determine a rolling 365-day average using the stain sampling results; an average $H_2$ S concentration of 5 ppmv must be used for days within the rolling 365-day period prior to the operation change.

(c) *Process heaters complying with the $NO_X$ concentration-based limit.* The owner or operator of a process heater subject to the $NO_X$ emissions limit in § 60.102a(g)(2) and electing to comply with the applicable emissions limit in § 60.102a(g)(2)(i)(A), (g)(2)(ii)(A), (g)(2)(iii)(A) or (g)(2)(iv)(A) shall install, operate, calibrate and maintain an instrument for continuously monitoring and recording the concentration (dry basis, 0-percent excess air) of $NO_X$ emissions into the atmosphere according to the requirements in paragraphs (c)(1) through (5) of this section, except as provided in paragraph (c)(6) of this section. The monitor must include an $O_2$ monitor for correcting the data for excess air.

(1) Except as provided in paragraph (c)(6) of this section, the owner or operator shall install, operate and maintain each $NO_X$ monitor according to Performance Specification 2 of Appendix B to part 60. The span value of this $NO_X$ monitor must be between 2 and 3 times the applicable emissions limit, inclusive.

(2) The owner or operator shall conduct performance evaluations of each $NO_X$ monitor according to the requirements in § 60.13(c) and Performance Specification 2 of appendix B to part 60. The owner or operator shall use Methods 7, 7A, 7C, 7D, or 7E of appendix A-4 to part 60 for conducting the relative accuracy evaluations. The method ANSI/ASME PTC 19.10-1981, "Flue and Exhaust Gas Analyses," (incorporated by reference—see § 60.17) is an acceptable alternative to EPA Method 7 or 7C of appendix A-4 to part 60.

(3) The owner or operator shall install, operate, and maintain each $O_2$ monitor according to Performance Specification 3 of appendix B to part 60. The span value of this $O_2$ monitor must be selected between 10 and 25 percent, inclusive.

(4) The owner or operator shall conduct performance evaluations of each $O_2$ monitor according to the requirements in § 60.13(c) and Performance Specification 3 of appendix B to part 60. Method 3, 3A, or 3B of appendix A-2 to part 60 shall be used for conducting the relative accuracy evaluations. The method ANSI/ASME PTC 19.10-1981, "Flue and Exhaust Gas Analyses," (incorporated by reference—see § 60.17) is an acceptable alternative to EPA Method 3B of appendix A-2 to part 60.

(5) The owner or operator shall comply with the quality assurance requirements in Procedure 1 of appendix F to part 60 for each $NO_X$ and $O_2$ monitor, including quarterly accuracy determinations for $NO_X$ monitors, annual accuracy determinations for $O_2$ monitors, and daily calibration drift tests.

(6) The owner or operator of a process heater that has a rated heating capacity of less than 100 MMBtu and is equipped with low-$NO_X$ burners (LNB) or ultra low-$NO_X$ burners (ULNB) is not subject to the monitoring requirements in paragraphs (c)(1) through (5) of this section. The owner or operator of such a process heater must conduct biennial performance tests to demonstrate compliance.

(6) The owner or operator of a process heater that has a rated heating capacity of less than 100 MMBtu and is equipped with combustion modification-based technology to reduce $NO_X$ emissions ( *i.e.,* low-$NO_X$ burners, ultra-low-$NO_X$ burners) may elect to comply with the monitoring requirements in paragraphs (c)(1) through (5) of this section or, alternatively, the owner or operator of such a process heater shall conduct biennial performance tests according to the requirements in § 60.104a(i), establish a maximum excess $O_2$ operating limit or operating curve according to the requirements in § 60.104a(i)(6) and comply with the $O_2$ monitoring requirements in paragraphs (c)(3) through (5) of this section to demonstrate compliance. If an $O_2$ operating curve is used ( *i.e.,* if different $O_2$ operating limits are established for different operating ranges), the owner or operator of the process heater must also monitor fuel gas flow rate, fuel oil flow rate (as applicable) and heating value content according to the methods provided in paragraphs (d)(5), (d)(6), and (d)(4) or (d)(7) of this section, respectively.

(d) *Process heaters complying with the $NO_X$ heating value-based or mass-based limit.* The owner or operator of a process heater subject to the $NO_X$ emissions limit in § 60.102a(g)(2) and electing to comply with the applicable emissions limit in § 60.102a(g)(2)(i)(B) or (g)(2)(ii)(B) shall install, operate, calibrate and maintain an instrument for continuously monitoring and recording the concentration (dry basis, 0-percent excess air) of $NO_X$ emissions into the atmosphere and shall determine the F factor of the fuel gas stream no less frequently than once per day according to the monitoring requirements in paragraphs (d)(1) through (4) of this section. The owner or operator of a co-fired process heater subject to the $NO_X$ emissions limit in § 60.102a(g)(2) and electing to comply with the heating value-based limit in § 60.102a(g)(2)(iii)(B) or (g)(2)(iv)(B) shall install, operate, calibrate and maintain an instrument for continuously monitoring and recording the concentration (dry basis, 0-percent excess air) of $NO_X$ emissions into the atmosphere according to the monitoring requirements in paragraph (d)(1) of this section; install, operate, calibrate and maintain an instrument for continuously monitoring and recording the flow rate of the fuel gas and fuel oil fed to the process heater according to the monitoring requirements in paragraph (d)(5) and (6) of this section; for fuel gas streams, determine gas composition according to the requirements in paragraph (d)(4) of this section or the higher heating value according to the requirements in paragraph (d)(7) of this section; and for fuel oil streams, determine the heating value according to the monitoring requirements in paragraph (d)(7) of this section.

(1) Except as provided in paragraph (d)(8) of this section, the owner or operator shall install, operate and maintain each $NO_X$ monitor according to the requirements in paragraphs (c)(1) through (5) of this section. The monitor must include an $O_2$ monitor for correcting the data for excess air.

(2) Except as provided in paragraph (d)(3) of this section, the owner or operator shall sample and analyze each fuel stream fed to the process heater using the methods and equations in section 12.3.2 of EPA Method 19 of Appendix A-7 to part 60 to determine the F factor on a dry basis. If a single fuel gas system provides fuel gas to several process heaters, the F factor may be determined at a single location in the fuel gas system provided it is representative of the fuel gas fed to the affected process heater(s).

(3) As an alternative to the requirements in paragraph (d)(2) of this section, the owner or operator of a gas-fired process heater shall install, operate and maintain a gas composition analyzer and determine the average F factor of the fuel gas using the factors in Table 1 of this subpart and Equation 10 of this section. If a single fuel gas system provides fuel gas to several process heaters, the F factor may be determined at a single location in the fuel gas system provided it is representative of the fuel gas fed to the affected process heater(s).

$$F_d = \frac{1{,}000{,}000 \times \sum (X_i \times MEV_i)}{\sum (X_i \times MHC_i)} \qquad \text{(Eq. 10)}$$

Where:

$F_d$ = F factor on dry basis at 0-percent excess air, dscf/MMBtu.

$X_i$ = mole or volume fraction of each component in the fuel gas.

$MEV_i$ = molar exhaust volume, dry standard cubic feet per mole (dscf/mol).

$MHC_i$ = molar heat content, Btu per mole (Btu/mol).

1,000,000 = unit conversion, Btu per MMBtu.

(4) The owner or operator shall conduct performance evaluations of each compositional monitor according to the requirements in Performance Specification 9 of Appendix B to part 60. Any of the following methods shall be used for conducting the relative accuracy evaluations:

(i) EPA Method 18 of Appendix A-6 to part 60;

(ii) ASTM D1945-03 (Reapproved 2010)(incorporated by reference-see § 60.17);

(iii) ASTM D1946-90 (Reapproved 2006)(incorporated by reference-see § 60.17);

(iv) ASTM D6420-99 (Reapproved 2004)(incorporated by reference-see § 60.17);

(v) GPA 2261-00 (incorporated by reference-see § 60.17); or

(vi) ASTM UOP539-97 (incorporated by reference-see § 60.17).

(5) The owner or operator shall install, operate and maintain fuel gas flow monitors according to the manufacturer's recommendations. For volumetric flow meters, temperature and pressure monitors must be installed in conjunction with the flow meter or in a representative location to correct the measured flow to standard conditions ( *i.e.,* 68 °F and 1 atmosphere). For mass flow meters, use gas compositions determined according to paragraph (d)(4) of this section to determine the average molecular weight of the fuel gas and convert the mass flow to a volumetric flow at standard conditions ( *i.e.,* 68 °F and 1 atmosphere). The owner or operator shall conduct performance evaluations of each fuel gas flow monitor according to the requirements in § 60.13 and Performance Specification 6 of Appendix B to part 60. Any of the following methods shall be used for conducting the relative accuracy evaluations:

(i) EPA Method 2, 2A, 2B, 2C or 2D of Appendix A-2 to part 60;

(ii) ASME MFC-3M-2004 (incorporated by reference-see § 60.17);

(iii) ANSI/ASME MFC-4M-1986 (Reaffirmed 2008) (incorporated by reference-see § 60.17);

(iv) ASME MFC-6M-1998 (Reaffirmed 2005) (incorporated by reference-see § 60.17);

(v) ASME/ANSI MFC-7M-1987 (Reaffirmed 2006) (incorporated by reference-see § 60.17);

(vi) ASME MFC-11M-2006 (incorporated by reference-see § 60.17);

(vii) ASME MFC-14M-2003 (incorporated by reference-see § 60.17);

(viii) ASME MFC-18M-2001 (incorporated by reference-see § 60.17);

(ix) AGA Report No. 3, Part 1 (incorporated by reference-see § 60.17);

(x) AGA Report No. 3, Part 2 (incorporated by reference-see § 60.17);

(xi) AGA Report No. 11 (incorporated by reference-see § 60.17);

(xii) AGA Report No. 7 (incorporated by reference-see § 60.17); and

(xiii) API Manual of Petroleum Measurement Standards, Chapter 22, Section 2 (incorporated by reference-see § 60.17).

(6) The owner or operator shall install, operate and maintain each fuel oil flow monitor according to the manufacturer's recommendations. The owner or operator shall conduct performance evaluations of each fuel oil flow monitor according to the requirements in § 60.13 and Performance Specification 6 of Appendix B to part 60. Any of the following methods shall be used for conducting the relative accuracy evaluations:

(i) Any one of the methods listed in paragraph (d)(5) of this section that are applicable to fuel oil ( *i.e.,* “fluids”);

(ii) ANSI/ASME-MFC-5M-1985 (Reaffirmed 2006) (incorporated by reference-see § 60.17);

(iii) ASME/ANSI MFC-9M-1988 (Reaffirmed 2006) (incorporated by reference-see § 60.17);

(iv) ASME MFC-16-2007 (incorporated by reference-see § 60.17);

(v) ASME MFC-22-2007 (incorporated by reference-see § 60.17); or

(vi) ISO 8316 (incorporated by reference-see § 60.17).

(7) The owner or operator shall determine the higher heating value of each fuel fed to the process heater using any of the applicable methods included in paragraphs (d)(7)(i) through (ix) of this section. If a common fuel supply system provides fuel gas or fuel oil to several process heaters, the higher heating value of the fuel in each fuel supply system may be determined at a single location in the fuel supply system provided it is representative of the fuel fed to the affected process heater(s). The higher heating value of each fuel fed to the process heater must be determined no less frequently than once per day except as provided in paragraph (d)(7)(x) of this section.

(i) ASTM D240-02 (Reapproved 2007) (incorporated by reference-see § 60.17).

(ii) ASTM D1826-94 (Reapproved 2003) (incorporated by reference-see § 60.17).

(iii) ASTM D1945-03 (Reapproved 2010) (incorporated by reference-see § 60.17).

(iv) ASTM D1946-90 (Reapproved 2006) (incorporated by reference-see § 60.17).

(v) ASTM D3588-98 (Reapproved 2003) (incorporated by reference-see § 60.17).

(vi) ASTM D4809-06 (incorporated by reference-see § 60.17).

(vii) ASTM D4891-89 (Reapproved 2006) (incorporated by reference-see § 60.17).

(viii) GPA 2172-09 (incorporated by reference-see § 60.17).

(ix) Any of the methods specified in section 2.2.7 of Appendix D to part 75.

(x) If the fuel oil supplied to the affected co-fired process heater originates from a single storage tank, the owner or operator may elect to use the storage tank sampling method in section 2.2.4.2 of Appendix D to part 75 instead of daily sampling, except that the most recent value for heating content must be used.

(8) The owner or operator of a process heater that has a rated heating capacity of less than 100 MMBtu and is equipped with combustion modification based technology to reduce $NO_X$ emissions ( *i.e.,* low-$NO_X$ burners or ultra-low $NO_X$ burners) may elect to comply with the monitoring requirements in paragraphs (d)(1) through (7) of this section or, alternatively, the owner or operator of such a process heater shall conduct biennial performance tests according to the requirements in § 60.104a(i), establish a maximum excess $O_2$ operating limit or operating curve according to the requirements in § 60.104a(i)(6) and comply with the $O_2$ monitoring requirements in paragraphs (c)(3) through (5) of this section to demonstrate compliance. If an $O_2$ operating curve is used ( *i.e.,* if different $O_2$ operating limits are established for different operating ranges), the owner or operator of the process heater must also monitor fuel gas flow rate, fuel oil flow rate (as applicable) and heating value content according to the methods provided in paragraphs (d)(5), (d)(6), and (d)(4) or (d)(7) of this section, respectively.

(e) *Sulfur monitoring for assessing root cause analysis threshold for affected flares.* Except as described in paragraphs (e)(4) and (h) of this section, the owner or operator of an affected flare subject to § 60.103a(c) through (e) shall determine the total reduced sulfur concentration for each gas line directed to the affected flare in accordance with either paragraph (e)(1), (e)(2) or (e)(3) of this section. Different options may be elected for different gas lines. If a monitoring system is in place that is capable of complying with the requirements related to either paragraph (e)(1), (e)(2) or (e)(3) of this section, the owner or operator of a modified flare must comply with the requirements related to either paragraph (e)(1), (e)(2) or (e)(3) of this section upon startup of the modified flare. If a monitoring system is not in place that is capable of complying with the requirements related to either paragraph (e)(1), (e)(2) or (e)(3) of this section, the owner or operator of a modified flare must comply with the requirements related to either paragraph (e)(1), (e)(2) or (e)(3) of this section no later than November 11, 2015 or upon startup of the modified flare, whichever is later.

(1) *Total reduced sulfur monitoring requirements.* The owner or operator shall install, operate, calibrate and maintain an instrument for continuously monitoring and recording the concentration of total reduced sulfur in gas discharged to the flare.

(i) The owner or operator shall install, operate and maintain each total reduced sulfur monitor according to Performance Specification 5 of Appendix B to part 60. The span value should be determined based on the maximum sulfur content of gas that can be discharged to the flare ( *e.g.,* roughly 1.1 to 1.3 times the maximum anticipated sulfur concentration), but may be no less than 5,000 ppmv. A single dual range monitor may be used to comply with the requirements of this paragraph and paragraph (a)(2) of this section provided the applicable span specifications are met.

(ii) The owner or operator shall conduct performance evaluations of each total reduced sulfur monitor according to the requirements in § 60.13(c) and Performance Specification 5 of Appendix B to part 60. For flares that routinely have flow, the owner or operator of each total reduced sulfur monitor shall use EPA Method 15A of Appendix A-5 to part 60 for conducting the relative accuracy evaluations. The method ANSI/ASME PTC 19.10-1981 (incorporated by reference-see § 60.17) is an acceptable alternative to EPA Method 15A of Appendix A-5 to part 60. The alternative relative accuracy procedures described in section 16.0 of Performance Specification 2 of Appendix B to part 60 (cylinder gas audits) may be used for conducting the relative accuracy evaluations. For flares that do not receive routine flow, the alternative relative accuracy procedures described in section 16.0 of Performance Specification 2 of Appendix B to part 60 (cylinder gas audits) may be used for conducting the relative accuracy evaluations, except that it is not necessary to include as much of the sampling probe or sampling line as practical.

(iii) The owner or operator shall comply with the applicable quality assurance procedures in Appendix F to part 60 for each total reduced sulfur monitor.

(2) *$H_2S$ monitoring requirements.* The owner or operator shall install, operate, calibrate, and maintain an instrument for continuously monitoring and recording the concentration of $H_2S$ in gas discharged to the flare according to the requirements in paragraphs (e)(2)(i) through (iii) of this section and shall collect and analyze samples of the gas and calculate total sulfur concentrations as specified in paragraphs (e)(2)(iv) through (ix) of this section.

(i) The owner or operator shall install, operate and maintain each $H_2S$ monitor according to Performance Specification 7 of Appendix B to part 60. The span value should be determined based on the maximum sulfur content

of gas that can be discharged to the flare ( *e.g.,* roughly 1.1 to 1.3 times the maximum anticipated sulfur concentration), but may be no less than 5,000 ppmv. A single dual range $H_2$ S monitor may be used to comply with the requirements of this paragraph and paragraph (a)(2) of this section provided the applicable span specifications are met.

(ii) The owner or operator shall conduct performance evaluations of each $H_2$ S monitor according to the requirements in § 60.13(c) and Performance Specification 7 of Appendix B to part 60. For flares that routinely have flow, the owner or operator shall use EPA Method 11, 15 or 15A of Appendix A-5 to part 60 for conducting the relative accuracy evaluations. The method ANSI/ASME PTC 19.10-1981 (incorporated by reference—see § 60.17) is an acceptable alternative to EPA Method 15A of Appendix A-5 to part 60. The alternative relative accuracy procedures described in section 16.0 of Performance Specification 2 of Appendix B to part 60 (cylinder gas audits) may be used for conducting the relative accuracy evaluations. For flares that do not receive routine flow, the alternative relative accuracy procedures described in section 16.0 of Performance Specification 2 of Appendix B to part 60 (cylinder gas audits) may be used for conducting the relative accuracy evaluations, except that it is not necessary to include as much of the sampling probe or sampling line as practical.

(iii) The owner or operator shall comply with the applicable quality assurance procedures in Appendix F to part 60 for each $H_2$ S monitor.

(iv) In the first 10 operating days after the date the flare must begin to comply with § 60.103a(c)(1), the owner or operator shall collect representative daily samples of the gas discharged to the flare. The samples may be grab samples or integrated samples. The owner or operator shall take subsequent representative daily samples at least once per week or as required in paragraph (e)(2)(ix) of this section.

(v) The owner or operator shall analyze each daily sample for total sulfur using either EPA Method 15A of Appendix A-5 to part 60, EPA Method 16A of Appendix A-6 to part 60, ASTM Method D4468-85 (Reapproved 2006) (incorporated by reference—see § 60.17) or ASTM Method D5504-08 (incorporated by reference—see § 60.17).

(vi) The owner or operator shall develop a 10-day average total sulfur-to-$H_2$ S ratio and 95-percent confidence interval as follows:

(A) Calculate the ratio of the total sulfur concentration to the $H_2$ S concentration for each day during which samples are collected.

(B) Determine the 10-day average total sulfur-to-$H_2$ S ratio as the arithmetic average of the daily ratios calculated in paragraph (e)(2)(vi)(A) of this section.

(C) Determine the acceptable range for subsequent weekly samples based on the 95-percent confidence interval for the distribution of daily ratios based on the 10 individual daily ratios using Equation 11 of this section.

$$AR = Ratio_{Avg} \pm 2.262 \times SDev \qquad \text{(Eq. 11)}$$

Where:

AR = Acceptable range of subsequent ratio determinations, unitless.

$Ratio_{Avg}$ = 10-day average total sulfur-to-$H_2$ S concentration ratio, unitless.

2.262 = t-distribution statistic for 95-percent 2-sided confidence interval for 10 samples (9 degrees of freedom).

SDev = Standard deviation of the 10 daily average total sulfur-to-$H_2$ S concentration ratios used to develop the 10-day average total sulfur-to-$H_2$ S concentration ratio, unitless.

(vii) For each day during the period when data are being collected to develop a 10-day average, the owner or operator shall estimate the total sulfur concentration using the measured total sulfur concentration measured for that day.

(viii) For all days other than those during which data are being collected to develop a 10-day average, the owner or operator shall multiply the most recent 10-day average total sulfur-to-$H_2$ S ratio by the daily average $H_2$ S concentrations obtained using the monitor as required by paragraph (e)(2)(i) through (iii) of this section to estimate total sulfur concentrations.

(ix) If the total sulfur-to-$H_2$ S ratio for a subsequent weekly sample is outside the acceptable range for the most recent distribution of daily ratios, the owner or operator shall develop a new 10-day average ratio and acceptable range based on data for the outlying weekly sample plus data collected over the following 9 operating days.

(3) *$SO_2$ monitoring requirements.* The owner or operator shall install, operate, calibrate and maintain an instrument for continuously monitoring and recording the concentration of $SO_2$ from a process heater or other fuel gas combustion device that is combusting gas representative of the fuel gas in the flare gas line according to the requirements in paragraph (a)(1) of this section, determine the F factor of the fuel gas at least daily according to the requirements in paragraphs (d)(2) through (4) of this section, determine the higher heating value of the fuel gas at least daily according to the requirements in paragraph (d)(7) of this section and calculate the total sulfur content (as $SO_2$ ) in the fuel gas using Equation 12 of this section.

$$TS_{FG} = C_{SO_2} \times F_d \times HHV_{FG} \qquad \text{(Eq. 12)}$$

Where:

$TS_{FG}$ = Total sulfur concentration, as $SO_2$ , in the fuel gas, ppmv.

$C_{SO2}$ = Concentration of $SO_2$ in the exhaust gas, ppmv (dry basis at 0-percent excess air).

$F_d$ = F factor gas on dry basis at 0-percent excess air, dscf/MMBtu.

$HHV_{FG}$ = Higher heating value of the fuel gas, MMBtu/scf.

(4) *Exemptions from sulfur monitoring requirements.* Flares identified in paragraphs (e)(4)(i) through (iv) of this section are exempt from the requirements in paragraphs (e)(1) through (3) of this section. For each such flare, except as provided in paragraph (e)(4)(iv), engineering calculations shall be used to calculate the $SO_2$ emissions in the event of a discharge that may trigger a root cause analysis under § 60.103a(c)(1).

(i) Flares that can only receive:

(A) Fuel gas streams that are inherently low in sulfur content as described in paragraph (a)(3)(i) through (iv) of this section; and/or

(B) Fuel gas streams that are inherently low in sulfur content for which the owner or operator has applied for an exemption from the $H_2$ S monitoring requirements as described in paragraph (b) of this section.

(ii) Emergency flares, provided that for each such flare, the owner or operator complies with the monitoring alternative in paragraph (g) of this section.

(iii) Flares equipped with flare gas recovery systems designed, sized and operated to capture all flows except those resulting from startup, shutdown or malfunction, provided that for each such flare, the owner or operator complies with the monitoring alternative in paragraph (g) of this section.

(iv) Secondary flares that receive gas diverted from the primary flare. In the event of a discharge from the secondary flare, the sulfur content measured by the sulfur monitor on the primary flare should be used to calculate $SO_2$ emissions, regardless of whether or not the monitoring alternative in paragraph (g) of this section is selected for the secondary flare.

(f) *Flow monitoring for flares.* Except as provided in paragraphs (f)(2) and (h) of this section, the owner or operator of an affected flare subject to § 60.103a(c) through (e) shall install, operate, calibrate and maintain, in accordance with

the specifications in paragraph (f)(1) of this section, a CPMS to measure and record the flow rate of gas discharged to the flare. If a flow monitor is not already in place, the owner or operator of a modified flare shall comply with the requirements of this paragraph by no later than November 11, 2015 or upon startup of the modified flare, whichever is later.

(1) The owner or operator shall install, calibrate, operate and maintain each flow monitor according to the manufacturer's procedures and specifications and the following requirements.

(i) Locate the monitor in a position that provides a representative measurement of the total gas flow rate.

(ii) Use a flow sensor with a measurement sensitivity of no more than 5 percent of the flow rate or 10 cubic feet per minute, whichever is greater.

(iii) Use a flow monitor that is maintainable online, is able to continuously correct for temperature and pressure and is able to record flow in standard conditions (as defined in § 60.2) over one-minute averages.

(iv) At least quarterly, perform a visual inspection of all components of the monitor for physical and operational integrity and all electrical connections for oxidation and galvanic corrosion if the flow monitor is not equipped with a redundant flow sensor.

(v) Recalibrate the flow monitor in accordance with the manufacturer's procedures and specifications biennially (every two years) or at the frequency specified by the manufacturer.

(2) Emergency flares, secondary flares and flares equipped with flare gas recovery systems designed, sized and operated to capture all flows except those resulting from startup, shutdown or malfunction are not required to install continuous flow monitors; provided, however, that for any such flare, the owner or operator shall comply with the monitoring alternative in paragraph (g) of this section.

(g) *Alternative monitoring for certain flares equipped with water seals.* The owner or operator of an affected flare subject to § 60.103a(c) through (e) that can be classified as either an emergency flare, a secondary flare or a flare equipped with a flare gas recovery system designed, sized and operated to capture all flows except those resulting from startup, shutdown or malfunction may, as an alternative to the sulfur and flow monitoring requirements of paragraphs (e) and (f) of this section, install, operate, calibrate and maintain, in accordance with the requirements in paragraphs (g)(1) through (7) of this section, a CPMS to measure and record the pressure in the flare gas header between the knock-out pot and water seal and to measure and record the water seal liquid level. If the required monitoring systems are not already in place, the owner or operator of a modified flare shall comply with the requirements of this paragraph by no later than November 11, 2015 or upon startup of the modified flare, whichever is later.

(1) Locate the pressure sensor(s) in a position that provides a representative measurement of the pressure and locate the liquid seal level monitor in a position that provides a representative measurement of the water column height.

(2) Minimize or eliminate pulsating pressure, vibration and internal and external corrosion.

(3) Use a pressure sensor and level monitor with a minimum tolerance of 1.27 centimeters of water.

(4) Using a manometer, check pressure sensor calibration quarterly.

(5) Conduct calibration checks any time the pressure sensor exceeds the manufacturer's specified maximum operating pressure range or install a new pressure sensor.

(6) In a cascaded flare system that employs multiple secondary flares, pressure and liquid level monitoring is required only on the first secondary flare in the system ( *i.e.,* the secondary flare with the lowest pressure release set point).

(7) This alternative monitoring option may be elected only for flares with four or fewer pressure exceedances required to be reported under § 60.108a(d)(5) ("reportable pressure exceedances") in any 365 consecutive calendar days.

Following the fifth reportable pressure exceedance in a 365-day period, the owner or operator must comply with the sulfur and flow monitoring requirements of paragraphs (e) and (f) of this section as soon as practical, but no later than 180 days after the fifth reportable pressure exceedance in a 365-day period.

(h) *Alternative monitoring for flares located in the BAAQMD or SCAQMD.* An affected flare subject to this subpart located in the BAAQMD may elect to comply with the monitoring requirements in both BAAQMD Regulation 12, Rule 11 and BAAQMD Regulation 12, Rule 12 as an alternative to complying with the requirements of paragraphs (e) and (f) of this section. An affected flare subject to this subpart located in the SCAQMD may elect to comply with the monitoring requirements in SCAQMD Rule 1118 as an alternative to complying with the requirements of paragraphs (e) and (f) of this section.

(i) *Excess emissions.* For the purpose of reports required by § 60.7(c), periods of excess emissions for fuel gas combustion devices subject to the emissions limitations in § 60.102a(g) and flares subject to the concentration requirement in § 60.103a(h) are defined as specified in paragraphs (i)(1) through (5) of this section. Determine a rolling 3-hour or a rolling daily average as the arithmetic average of the applicable 1-hour averages ( *e.g.,* a rolling 3-hour average is the arithmetic average of three contiguous 1-hour averages). Determine a rolling 30-day or a rolling 365-day average as the arithmetic average of the applicable daily averages ( *e.g.,* a rolling 30-day average is the arithmetic average of 30 contiguous daily averages).

(1) *$SO_2$ or $H_2S$ limits for fuel gas combustion devices.* (i) If the owner or operator of a fuel gas combustion device elects to comply with the $SO_2$ emission limits in § 60.102a(g)(1)(i), each rolling 3-hour period during which the average concentration of $SO_2$ as measured by the $SO_2$ continuous monitoring system required under paragraph (a)(1) of this section exceeds 20 ppmv, and each rolling 365-day period during which the average concentration of $SO_2$ as measured by the $SO_2$ continuous monitoring system required under paragraph (a)(1) of this section exceeds 8 ppmv.

(ii) If the owner or operator of a fuel gas combustion device elects to comply with the $H_2S$ concentration limits in § 60.102a(g)(1)(ii), each rolling 3-hour period during which the average concentration of $H_2S$ as measured by the $H_2S$ continuous monitoring system required under paragraph (a)(2) of this section exceeds 162 ppmv and each rolling 365-day period during which the average concentration as measured by the $H_2S$ continuous monitoring system under paragraph (a)(2) of this section exceeds 60 ppmv.

(iii) If the owner or operator of a fuel gas combustion device becomes subject to the requirements of daily stain tube sampling in paragraph (b)(3)(iii) of this section, each day during which the daily concentration of $H_2S$ exceeds 162 ppmv and each rolling 365-day period during which the average concentration of $H_2S$ exceeds 60 ppmv.

(2) $H_2S$ concentration limits for flares. (i) Each rolling 3-hour period during which the average concentration of $H_2S$ as measured by the $H_2S$ continuous monitoring system required under paragraph (a)(2) of this section exceeds 162 ppmv.

(ii) If the owner or operator of a flare becomes subject to the requirements of daily stain tube sampling in paragraph (b)(3)(iii) of this section, each day during which the daily concentration of $H_2S$ exceeds 162 ppmv.

(3) *Rolling 30-day average $NO_X$ limits for fuel gas combustion devices.* Each rolling 30-day period during which the average concentration of $NO_X$ as measured by the $NO_X$ continuous monitoring system required under paragraph (c) or (d) of this section exceeds:

(i) For a natural draft process heater, 40 ppmv and, if monitored according to § 60.107a(d), 0.040 lb/MMBtu;

(ii) For a forced draft process heater, 60 ppmv and, if monitored according to § 60.107a(d), 0.060 lb/MMBtu; and

(iii) For a co-fired process heater electing to comply with the $NO_X$ limit in § 60.102a(g)(2)(iii)(A) or (g)(2)(iv)(A), 150 ppmv.

(iv) The site-specific limit determined by the Administrator under § 60.102a(i).

(4) *Daily $NO_X$ limits for fuel gas combustion devices.* Each day during which the concentration of $NO_X$ as measured by the $NO_X$ continuous monitoring system required under paragraph (d) of this section exceeds the daily average emissions limit calculated using Equation 3 in § 60.102a(g)(2)(iii)(B) or Equation 4 in § 60.102a(g)(2)(iv)(B).

(5) *Daily $O_2$ limits for fuel gas combustion devices.* Each day during which the concentration of $O_2$ as measured by the $O_2$ continuous monitoring system required under paragraph (c)(6) of this section exceeds the $O_2$ operating limit or operating curve determined during the most recent biennial performance test.

[73 FR 35867, June 24, 2008, as amended at 77 FR 56473, Sep. 12, 2012]

**§ 60.108a Recordkeeping and reporting requirements.**

(a) Each owner or operator subject to the emissions limitations in § 60.102a shall comply with the notification, recordkeeping, and reporting requirements in § 60.7 and other requirements as specified in this section.

(b) Each owner or operator subject to an emissions limitation in § 60.102a shall notify the Administrator of the specific monitoring provisions of §§ 60.105a, 60.106a and 60.107a with which the owner or operator intends to comply. Each owner or operator of a co-fired process heater subject to an emissions limitation in § 60.102a(g)(2)(iii) or (iv) shall submit to the Administrator documentation showing that the process heater meets the definition of a co-fired process heater in § 60.101a. Notifications required by this paragraph shall be submitted with the notification of initial startup required by § 60.7(a)(3).

(c) The owner or operator shall maintain the following records:

(1) A copy of the flare management plan.

(2) Records of information to document conformance with bag leak detection system operation and maintenance requirements in § 60.105a(c).

(3) Records of bag leak detection system alarms and actions according to § 60.105a(c).

(4) For each FCCU and fluid coking unit subject to the monitoring requirements in § 60.105a(b)(1), records of the average coke burn-off rate and hours of operation.

(5) For each fuel gas stream to which one of the exemptions listed in § 60.107a(a)(3) applies, records of the specific exemption determined to apply for each fuel stream. If the owner or operator applies for the exemption described in § 60.107a(a)(3)(iv), the owner or operator must keep a copy of the application as well as the letter from the Administrator granting approval of the application.

(6) Records of discharges greater than 500 lb $SO_2$ in any 24-hour period from any affected flare, discharges greater than 500 lb $SO_2$ in excess of the allowable limits from a fuel gas combustion device or sulfur recovery plant and discharges to an affected flare in excess of 500,000 scf above baseline in any 24-hour period as required by § 60.103a(c). If the monitoring alternative provided in § 60.107a(g) is selected, the owner or operator shall record any instance when the flare gas line pressure exceeds the water seal liquid depth, except for periods attributable to compressor staging that do not exceed the staging time specified in § 60.103a(a)(3)(vii)(C). The following information shall be recorded no later than 45 days following the end of a discharge exceeding the thresholds:

(i) A description of the discharge.

(ii) The date and time the discharge was first identified and the duration of the discharge.

(iii) The measured or calculated cumulative quantity of gas discharged over the discharge duration. If the discharge duration exceeds 24 hours, record the discharge quantity for each 24-hour period. For a flare, record the measured or calculated cumulative quantity of gas discharged to the flare over the discharge duration. If the discharge duration exceeds 24 hours, record the quantity of gas discharged to the flare for each 24-hour period. Engineering calculations are allowed for fuel gas combustion devices, but are not allowed for flares, except for those complying with the alternative monitoring requirements in § 60.107a(g).

(iv) For each discharge greater than 500 lb $SO_2$ in any 24-hour period from a flare, the measured total sulfur concentration or both the measured $H_2S$ concentration and the estimated total sulfur concentration in the fuel gas at a representative location in the flare inlet.

(v) For each discharge greater than 500 lb $SO_2$ in excess of the applicable short-term emissions limit in § 60.102a(g)(1) from a fuel gas combustion device, either the measured concentration of $H_2S$ in the fuel gas or the measured concentration of $SO_2$ in the stream discharged to the atmosphere. Process knowledge can be used to make these estimates for fuel gas combustion devices, but cannot be used to make these estimates for flares, except as provided in § 60.107a(e)(4).

(vi) For each discharge greater than 500 lb $SO_2$ in excess of the allowable limits from a sulfur recovery plant, either the measured concentration of reduced sulfur or $SO_2$ discharged to the atmosphere.

(vii) For each discharge greater than 500 lb $SO_2$ in any 24-hour period from any affected flare or discharge greater than 500 lb $SO_2$ in excess of the allowable limits from a fuel gas combustion device or sulfur recovery plant, the cumulative quantity of $H_2S$ and $SO_2$ released into the atmosphere. For releases controlled by flares, assume 99-percent conversion of reduced sulfur or total sulfur to $SO_2$ . For fuel gas combustion devices, assume 99-percent conversion of $H_2S$ to $SO_2$ .

(viii) The steps that the owner or operator took to limit the emissions during the discharge.

(ix) The root cause analysis and corrective action analysis conducted as required in § 60.103a(d), including an identification of the affected facility, the date and duration of the discharge, a statement noting whether the discharge resulted from the same root cause(s) identified in a previous analysis and either a description of the recommended corrective action(s) or an explanation of why corrective action is not necessary under § 60.103a(e).

(x) For any corrective action analysis for which corrective actions are required in § 60.103a(e), a description of the corrective action(s) completed within the first 45 days following the discharge and, for action(s) not already completed, a schedule for implementation, including proposed commencement and completion dates.

(xi) For each discharge from any affected flare that is the result of a planned startup or shutdown of a refinery process unit or ancillary equipment connected to the affected flare, a statement that a root cause analysis and corrective action analysis are not necessary because the owner or operator followed the flare management plan.

(7) If the owner or operator elects to comply with § 60.107a(e)(2) for a flare, records of the $H_2S$ and total sulfur analyses of each grab or integrated sample, the calculated daily total sulfur-to-$H_2S$ ratios, the calculated 10-day average total sulfur-to-$H_2S$ ratios and the 95-percent confidence intervals for each 10-day average total sulfur-to-$H_2S$ ratio.

(d) Each owner or operator subject to this subpart shall submit an excess emissions report for all periods of excess emissions according to the requirements of § 60.7(c) except that the report shall contain the information specified in paragraphs (d)(1) through (7) of this section.

(1) The date that the exceedance occurred;

(2) An explanation of the exceedance;

(3) Whether the exceedance was concurrent with a startup, shutdown, or malfunction of an affected facility or control system; and

(4) A description of the action taken, if any.

(5) The information described in paragraph (c)(6) of this section for all discharges listed in paragraph (c)(6) of this section. For a flare complying with the monitoring alternative under § 60.107a(g), following the fifth discharge required to be recorded under paragraph (c)(6) of this section and reported under this paragraph, the owner or operator shall include notification that monitoring systems will be installed according to § 60.107a(e) and (f) within 180 days following the fifth discharge.

(6) For any periods for which monitoring data are not available, any changes made in operation of the emission control system during the period of data unavailability which could affect the ability of the system to meet the applicable emission limit. Operations of the control system and affected facility during periods of data unavailability are to be compared with operation of the control system and affected facility before and following the period of data unavailability.

(7) A written statement, signed by a responsible official, certifying the accuracy and completeness of the information contained in the report.

[73 FR 35867, June 24, 2008, as amended at 77 FR 56479, Sep. 12, 2012]

**§ 60.109a Delegation of authority.**

(a) This subpart can be implemented and enforced by the U.S. EPA or a delegated authority such as a State, local, or tribal agency. You should contact your U.S. EPA Regional Office to find out if this subpart is delegated to a State, local, or tribal agency within your State.

(b) In delegating implementation and enforcement authority of this subpart to a state, local or tribal agency, the approval authorities contained in paragraphs (b)(1) through (4) of this section are retained by the Administrator of the U.S. EPA and are not transferred to the state, local or tribal agency.

(1) Approval of a major change to test methods under § 60.8(b). A “major change to test method” is defined in 40 CFR 63.90.

(2) Approval of a major change to monitoring under § 60.13(i). A “major change to monitoring” is defined in 40 CFR 63.90.

(3) Approval of a major change to recordkeeping/reporting under § 60.7(b) through (f). A “major change to recordkeeping/reporting” is defined in 40 CFR 63.90.

(4) Approval of an application for an alternative means of emission limitation under § 60.103a(j) of this subpart.

[73 FR 35867, June 24, 2008, as amended at 77 FR 56480, Sep. 12, 2012]

**Table 1 to Subpart Ja of Part 60—Molar Exhaust Volumes and Molar Heat Content of Fuel Gas Constituents**

| Constituent | MEV[a] dscf/mol | MHC[b] Btu/mol |
|---|---|---|
| Methane ($CH_4$) | 7.29 | 842 |
| Ethane ($C_2H_6$) | 12.96 | 1,475 |
| Hydrogen ($H_2$) | 1.61 | 269 |
| Ethene ($C_2H_4$) | 11.34 | 1,335 |
| Propane ($C_3H_8$) | 18.62 | 2,100 |
| Propene ($C_3H_6$) | 17.02 | 1,947 |
| Butane ($C_4H_{10}$) | 24.30 | 2,717 |
| Butene ($C_4H_8$) | 22.69 | 2,558 |
| Inerts | 0.85 | 0 |

[a] MEV = molar exhaust volume, dry standard cubic feet per gram-mole (dscf/g-mol) at standard conditions of 68 °F and 1 atmosphere.

[b] MHC = molar heat content (higher heating value basis), Btu per gram-mole (Btu/g-mol).

[77 FR 56480, Sep. 12, 2012]

**Attachment M**
**To Part 70 Operating Permit Renewal No. T129-25424-00003**

[Downloaded from the eCFR on May 21, 2013]

**Electronic Code of Federal Regulations**

**Title 40: Protection of Environment**

**40 CFR 60, Subpart Db—Standards of Performance for Industrial-Commercial-Institutional Steam Generating Units**

Source: 72 FR 32742, June 13, 2007, unless otherwise noted.

**§ 60.40b Applicability and delegation of authority.**

(a) The affected facility to which this subpart applies is each steam generating unit that commences construction, modification, or reconstruction after June 19, 1984, and that has a heat input capacity from fuels combusted in the steam generating unit of greater than 29 megawatts (MW) (100 million British thermal units per hour (MMBtu/hr)).

(b) Any affected facility meeting the applicability requirements under paragraph (a) of this section and commencing construction, modification, or reconstruction after June 19, 1984, but on or before June 19, 1986, is subject to the following standards:

(1) Coal-fired affected facilities having a heat input capacity between 29 and 73 MW (100 and 250 MMBtu/hr), inclusive, are subject to the particulate matter (PM) and nitrogen oxides ($NO_X$ ) standards under this subpart.

(2) Coal-fired affected facilities having a heat input capacity greater than 73 MW (250 MMBtu/hr) and meeting the applicability requirements under subpart D (Standards of performance for fossil-fuel-fired steam generators; § 60.40) are subject to the PM and $NO_X$ standards under this subpart and to the sulfur dioxide ($SO_2$ ) standards under subpart D (§ 60.43).

(3) Oil-fired affected facilities having a heat input capacity between 29 and 73 MW (100 and 250 MMBtu/hr), inclusive, are subject to the $NO_X$ standards under this subpart.

(4) Oil-fired affected facilities having a heat input capacity greater than 73 MW (250 MMBtu/hr) and meeting the applicability requirements under subpart D (Standards of performance for fossil-fuel-fired steam generators; § 60.40) are also subject to the $NO_X$ standards under this subpart and the PM and $SO_2$ standards under subpart D (§ 60.42 and § 60.43).

(c) Affected facilities that also meet the applicability requirements under subpart J or subpart Ja of this part are subject to the PM and $NO_X$ standards under this subpart and the $SO_2$ standards under subpart J or subpart Ja of this part, as applicable.

(d) Affected facilities that also meet the applicability requirements under subpart E (Standards of performance for incinerators; § 60.50) are subject to the $NO_X$ and PM standards under this subpart.

(e) Steam generating units meeting the applicability requirements under subpart Da (Standards of performance for electric utility steam generating units; § 60.40Da) are not subject to this subpart.

(f) Any change to an existing steam generating unit for the sole purpose of combusting gases containing total reduced sulfur (TRS) as defined under § 60.281 is not considered a modification under § 60.14 and the steam generating unit is not subject to this subpart.

(g) In delegating implementation and enforcement authority to a State under section 111(c) of the Clean Air Act, the following authorities shall be retained by the Administrator and not transferred to a State.

(1) Section 60.44b(f).

(2) Section 60.44b(g).

(3) Section 60.49b(a)(4).

(h) Any affected facility that meets the applicability requirements and is subject to subpart Ea, subpart Eb, subpart AAAA, or subpart CCCC of this part is not subject to this subpart.

(i) Affected facilities ( *i.e.,* heat recovery steam generators) that are associated with stationary combustion turbines and that meet the applicability requirements of subpart KKKK of this part are not subject to this subpart. This subpart will continue to apply to all other affected facilities ( *i.e.* heat recovery steam generators with duct burners) that are capable of combusting more than 29 MW (100 MMBtu/h) heat input of fossil fuel. If the affected facility ( *i.e.* heat recovery steam generator) is subject to this subpart, only emissions resulting from combustion of fuels in the steam generating unit are subject to this subpart. (The stationary combustion turbine emissions are subject to subpart GG or KKKK, as applicable, of this part.)

(j) Any affected facility meeting the applicability requirements under paragraph (a) of this section and commencing construction, modification, or reconstruction after June 19, 1986 is not subject to subpart D (Standards of Performance for Fossil-Fuel-Fired Steam Generators, § 60.40).

(k) Any affected facility that meets the applicability requirements and is subject to an EPA approved State or Federal section 111(d)/129 plan implementing subpart Cb or subpart BBBB of this part is not covered by this subpart.

(l) Affected facilities that also meet the applicability requirements under subpart BB of this part (Standards of Performance for Kraft Pulp Mills) are subject to the $SO_2$ and $NO_X$ standards under this subpart and the PM standards under subpart BB.

(m) Temporary boilers are not subject to this subpart.

[72 FR 32742, June 13, 2007, as amended at 74 FR 5084, Jan. 28, 2009; 77 FR 9459, Feb. 16, 2012]

**§ 60.41b Definitions.**

As used in this subpart, all terms not defined herein shall have the meaning given them in the Clean Air Act and in subpart A of this part.

*Annual capacity factor* means the ratio between the actual heat input to a steam generating unit from the fuels listed in § 60.42b(a), § 60.43b(a), or § 60.44b(a), as applicable, during a calendar year and the potential heat input to the steam generating unit had it been operated for 8,760 hours during a calendar year at the maximum steady state design heat input capacity. In the case of steam generating units that are rented or leased, the actual heat input shall be determined based on the combined heat input from all operations of the affected facility in a calendar year.

*Byproduct/waste* means any liquid or gaseous substance produced at chemical manufacturing plants, petroleum refineries, or pulp and paper mills (except natural gas, distillate oil, or residual oil) and combusted in a steam generating unit for heat recovery or for disposal. Gaseous substances with carbon dioxide ($CO_2$ ) levels greater than 50 percent or carbon monoxide levels greater than 10 percent are not byproduct/waste for the purpose of this subpart.

*Chemical manufacturing plants* mean industrial plants that are classified by the Department of Commerce under Standard Industrial Classification (SIC) Code 28.

*Coal* means all solid fuels classified as anthracite, bituminous, subbituminous, or lignite by the American Society of Testing and Materials in ASTM D388 (incorporated by reference, see § 60.17), coal refuse, and petroleum coke. Coal-derived synthetic fuels, including but not limited to solvent refined coal, gasified coal not meeting the definition of natural gas, coal-oil mixtures, coke oven gas, and coal-water mixtures, are also included in this definition for the purposes of this subpart.

*Coal refuse* means any byproduct of coal mining or coal cleaning operations with an ash content greater than 50 percent, by weight, and a heating value less than 13,900 kJ/kg (6,000 Btu/lb) on a dry basis.

*Cogeneration* , also known as combined heat and power, means a facility that simultaneously produces both electric (or mechanical) and useful thermal energy from the same primary energy source.

*Coke oven gas* means the volatile constituents generated in the gaseous exhaust during the carbonization of bituminous coal to form coke.

*Combined cycle system* means a system in which a separate source, such as a gas turbine, internal combustion engine, kiln, etc., provides exhaust gas to a steam generating unit.

*Conventional technology* means wet flue gas desulfurization (FGD) technology, dry FGD technology, atmospheric fluidized bed combustion technology, and oil hydrodesulfurization technology.

*Distillate oil* means fuel oils that contain 0.05 weight percent nitrogen or less and comply with the specifications for fuel oil numbers 1 and 2, as defined by the American Society of Testing and Materials in ASTM D396 (incorporated by reference, see § 60.17), diesel fuel oil numbers 1 and 2, as defined by the American Society for Testing and Materials in ASTM D975 (incorporated by reference, see § 60.17), kerosine, as defined by the American Society of Testing and Materials in ASTM D3699 (incorporated by reference, see § 60.17), biodiesel as defined by the American Society of Testing and Materials in ASTM D6751 (incorporated by reference, see § 60.17), or biodiesel blends as defined by the American Society of Testing and Materials in ASTM D7467 (incorporated by reference, see § 60.17).

*Dry flue gas desulfurization technology* means a $SO_2$ control system that is located downstream of the steam generating unit and removes sulfur oxides from the combustion gases of the steam generating unit by contacting the combustion gases with an alkaline reagent and water, whether introduced separately or as a premixed slurry or solution and forming a dry powder material. This definition includes devices where the dry powder material is subsequently converted to another form. Alkaline slurries or solutions used in dry flue gas desulfurization technology include but are not limited to lime and sodium.

*Duct burner* means a device that combusts fuel and that is placed in the exhaust duct from another source, such as a stationary gas turbine, internal combustion engine, kiln, etc., to allow the firing of additional fuel to heat the exhaust gases before the exhaust gases enter a steam generating unit.

*Emerging technology* means any $SO_2$ control system that is not defined as a conventional technology under this section, and for which the owner or operator of the facility has applied to the Administrator and received approval to operate as an emerging technology under § 60.49b(a)(4).

*Federally enforceable* means all limitations and conditions that are enforceable by the Administrator, including the requirements of 40 CFR parts 60 and 61, requirements within any applicable State Implementation Plan, and any permit requirements established under 40 CFR 52.21 or under 40 CFR 51.18 and 51.24.

*Fluidized bed combustion technology* means combustion of fuel in a bed or series of beds (including but not limited to bubbling bed units and circulating bed units) of limestone aggregate (or other sorbent materials) in which these materials are forced upward by the flow of combustion air and the gaseous products of combustion.

*Fuel pretreatment* means a process that removes a portion of the sulfur in a fuel before combustion of the fuel in a steam generating unit.

*Full capacity* means operation of the steam generating unit at 90 percent or more of the maximum steady-state design heat input capacity.

*Gaseous fuel* means any fuel that is a gas at ISO conditions. This includes, but is not limited to, natural gas and gasified coal (including coke oven gas).

*Gross output* means the gross useful work performed by the steam generated. For units generating only electricity, the gross useful work performed is the gross electrical output from the turbine/generator set. For cogeneration units,

the gross useful work performed is the gross electrical or mechanical output plus 75 percent of the useful thermal output measured relative to ISO conditions that is not used to generate additional electrical or mechanical output or to enhance the performance of the unit ( *i.e.* , steam delivered to an industrial process).

*Heat input* means heat derived from combustion of fuel in a steam generating unit and does not include the heat derived from preheated combustion air, recirculated flue gases, or exhaust gases from other sources, such as gas turbines, internal combustion engines, kilns, etc.

*Heat release rate* means the steam generating unit design heat input capacity (in MW or Btu/hr) divided by the furnace volume (in cubic meters or cubic feet); the furnace volume is that volume bounded by the front furnace wall where the burner is located, the furnace side waterwall, and extending to the level just below or in front of the first row of convection pass tubes.

*Heat transfer medium* means any material that is used to transfer heat from one point to another point.

*High heat release rate* means a heat release rate greater than 730,000 J/sec-$m^3$ (70,000 Btu/hr-$ft^3$ ).

*ISO Conditions* means a temperature of 288 Kelvin, a relative humidity of 60 percent, and a pressure of 101.3 kilopascals.

*Lignite* means a type of coal classified as lignite A or lignite B by the American Society of Testing and Materials in ASTM D388 (incorporated by reference, see § 60.17).

*Low heat release rate* means a heat release rate of 730,000 J/sec-$m^3$ (70,000 Btu/hr-$ft^3$ ) or less.

*Mass-feed stoker steam generating unit* means a steam generating unit where solid fuel is introduced directly into a retort or is fed directly onto a grate where it is combusted.

*Maximum heat input capacity* means the ability of a steam generating unit to combust a stated maximum amount of fuel on a steady state basis, as determined by the physical design and characteristics of the steam generating unit.

*Municipal-type solid waste* means refuse, more than 50 percent of which is waste consisting of a mixture of paper, wood, yard wastes, food wastes, plastics, leather, rubber, and other combustible materials, and noncombustible materials such as glass and rock.

*Natural gas* means:

(1) A naturally occurring mixture of hydrocarbon and nonhydrocarbon gases found in geologic formations beneath the earth's surface, of which the principal constituent is methane; or

(2) Liquefied petroleum gas, as defined by the American Society for Testing and Materials in ASTM D1835 (incorporated by reference, see § 60.17); or

(3) A mixture of hydrocarbons that maintains a gaseous state at ISO conditions. Additionally, natural gas must either be composed of at least 70 percent methane by volume or have a gross calorific value between 34 and 43 megajoules (MJ) per dry standard cubic meter (910 and 1,150 Btu per dry standard cubic foot).

*Noncontinental area* means the State of Hawaii, the Virgin Islands, Guam, American Samoa, the Commonwealth of Puerto Rico, or the Northern Mariana Islands.

*Oil* means crude oil or petroleum or a liquid fuel derived from crude oil or petroleum, including distillate and residual oil.

*Petroleum refinery* means industrial plants as classified by the Department of Commerce under Standard Industrial Classification (SIC) Code 29.

*Potential sulfur dioxide emission rate* means the theoretical $SO_2$ emissions (nanograms per joule (ng/J) or lb/MMBtu heat input) that would result from combusting fuel in an uncleaned state and without using emission control systems. For gasified coal or oil that is desulfurized prior to combustion, the *Potential sulfur dioxide emission rate* is the theoretical $SO_2$ emissions (ng/J or lb/MMBtu heat input) that would result from combusting fuel in a cleaned state without using any post combustion emission control systems.

*Process heater* means a device that is primarily used to heat a material to initiate or promote a chemical reaction in which the material participates as a reactant or catalyst.

*Pulp and paper mills* means industrial plants that are classified by the Department of Commerce under North American Industry Classification System (NAICS) Code 322 or Standard Industrial Classification (SIC) Code 26.

*Pulverized coal-fired steam generating unit* means a steam generating unit in which pulverized coal is introduced into an air stream that carries the coal to the combustion chamber of the steam generating unit where it is fired in suspension. This includes both conventional pulverized coal-fired and micropulverized coal-fired steam generating units. Residual oil means crude oil, fuel oil numbers 1 and 2 that have a nitrogen content greater than 0.05 weight percent, and all fuel oil numbers 4, 5 and 6, as defined by the American Society of Testing and Materials in ASTM D396 (incorporated by reference, see § 60.17).

*Spreader stoker steam generating unit* means a steam generating unit in which solid fuel is introduced to the combustion zone by a mechanism that throws the fuel onto a grate from above. Combustion takes place both in suspension and on the grate.

*Steam generating unit* means a device that combusts any fuel or byproduct/waste and produces steam or heats water or heats any heat transfer medium. This term includes any municipal-type solid waste incinerator with a heat recovery steam generating unit or any steam generating unit that combusts fuel and is part of a cogeneration system or a combined cycle system. This term does not include process heaters as they are defined in this subpart.

*Steam generating unit operating day* means a 24-hour period between 12:00 midnight and the following midnight during which any fuel is combusted at any time in the steam generating unit. It is not necessary for fuel to be combusted continuously for the entire 24-hour period.

*Temporary boiler* means any gaseous or liquid fuel-fired steam generating unit that is designed to, and is capable of, being carried or moved from one location to another by means of, for example, wheels, skids, carrying handles, dollies, trailers, or platforms. A steam generating unit is not a temporary boiler if any one of the following conditions exists:

(1) The equipment is attached to a foundation.

(2) The steam generating unit or a replacement remains at a location for more than 180 consecutive days. Any temporary boiler that replaces a temporary boiler at a location and performs the same or similar function will be included in calculating the consecutive time period.

(3) The equipment is located at a seasonal facility and operates during the full annual operating period of the seasonal facility, remains at the facility for at least 2 years, and operates at that facility for at least 3 months each year.

(4) The equipment is moved from one location to another in an attempt to circumvent the residence time requirements of this definition.

*Very low sulfur oil* means for units constructed, reconstructed, or modified on or before February 28, 2005, oil that contains no more than 0.5 weight percent sulfur or that, when combusted without $SO_2$ emission control, has a $SO_2$ emission rate equal to or less than 215 ng/J (0.5 lb/MMBtu) heat input. For units constructed, reconstructed, or modified after February 28, 2005 and not located in a noncontinental area, *very low sulfur oil* means oil that contains no more than 0.30 weight percent sulfur or that, when combusted without $SO_2$ emission control, has a $SO_2$ emission rate equal to or less than 140 ng/J (0.32 lb/MMBtu) heat input. For units constructed, reconstructed, or modified after February 28, 2005 and located in a noncontinental area, *very low sulfur oil* means oil that contains no more than 0.5

weight percent sulfur or that, when combusted without $SO_2$ emission control, has a $SO_2$ emission rate equal to or less than 215 ng/J (0.50 lb/MMBtu) heat input.

*Wet flue gas desulfurization technology* means a $SO_2$ control system that is located downstream of the steam generating unit and removes sulfur oxides from the combustion gases of the steam generating unit by contacting the combustion gas with an alkaline slurry or solution and forming a liquid material. This definition applies to devices where the aqueous liquid material product of this contact is subsequently converted to other forms. Alkaline reagents used in wet flue gas desulfurization technology include, but are not limited to, lime, limestone, and sodium.

*Wet scrubber system* means any emission control device that mixes an aqueous stream or slurry with the exhaust gases from a steam generating unit to control emissions of PM or $SO_2$ .

*Wood* means wood, wood residue, bark, or any derivative fuel or residue thereof, in any form, including, but not limited to, sawdust, sanderdust, wood chips, scraps, slabs, millings, shavings, and processed pellets made from wood or other forest residues.

[72 FR 32742, June 13, 2007, as amended at 74 FR 5084, Jan. 28, 2009; 77 FR 9459, Feb. 16, 2012]

**§ 60.42b Standard for sulfur dioxide (SO2 ).**

(a) Except as provided in paragraphs (b), (c), (d), or (j) of this section, on and after the date on which the performance test is completed or required to be completed under § 60.8, whichever comes first, no owner or operator of an affected facility that commenced construction, reconstruction, or modification on or before February 28, 2005, that combusts coal or oil shall cause to be discharged into the atmosphere any gases that contain $SO_2$ in excess of 87 ng/J (0.20 lb/MMBtu) or 10 percent (0.10) of the potential $SO_2$ emission rate (90 percent reduction) and the emission limit determined according to the following formula:

$$E_s = \frac{(K_a H_a + K_b H_b)}{(H_a + H_b)}$$

Where:

$E_s$ = $SO_2$ emission limit, in ng/J or lb/MMBtu heat input;

$K_a$ = 520 ng/J (or 1.2 lb/MMBtu);

$K_b$ = 340 ng/J (or 0.80 lb/MMBtu);

$H_a$ = Heat input from the combustion of coal, in J (MMBtu); and

$H_b$ = Heat input from the combustion of oil, in J (MMBtu).

For facilities complying with the percent reduction standard, only the heat input supplied to the affected facility from the combustion of coal and oil is counted in this paragraph. No credit is provided for the heat input to the affected facility from the combustion of natural gas, wood, municipal-type solid waste, or other fuels or heat derived from exhaust gases from other sources, such as gas turbines, internal combustion engines, kilns, etc.

(b) On and after the date on which the performance test is completed or required to be completed under § 60.8, whichever date comes first, no owner or operator of an affected facility that commenced construction, reconstruction, or modification on or before February 28, 2005, that combusts coal refuse alone in a fluidized bed combustion steam generating unit shall cause to be discharged into the atmosphere any gases that contain $SO_2$ in excess of 87 ng/J (0.20 lb/MMBtu) or 20 percent (0.20) of the potential $SO_2$ emission rate (80 percent reduction) and 520 ng/J (1.2 lb/MMBtu) heat input. If coal or oil is fired with coal refuse, the affected facility is subject to paragraph (a) or (d) of this section, as applicable. For facilities complying with the percent reduction standard, only the heat input supplied to the affected facility from the combustion of coal and oil is counted in this paragraph. No credit is provided for the heat

input to the affected facility from the combustion of natural gas, wood, municipal-type solid waste, or other fuels or heat derived from exhaust gases from other sources, such as gas turbines, internal combustion engines, kilns, etc.

(c) On and after the date on which the performance test is completed or is required to be completed under § 60.8, whichever comes first, no owner or operator of an affected facility that combusts coal or oil, either alone or in combination with any other fuel, and that uses an emerging technology for the control of $SO_2$ emissions, shall cause to be discharged into the atmosphere any gases that contain $SO_2$ in excess of 50 percent of the potential $SO_2$ emission rate (50 percent reduction) and that contain $SO_2$ in excess of the emission limit determined according to the following formula:

$$E_s = \frac{(K_c H_c + K_d H_d)}{(H_c + H_d)}$$

Where:

$E_s$ = SO2 emission limit, in ng/J or lb/MM Btu heat input;

$K_c$ = 260 ng/J (or 0.60 lb/MMBtu);

$K_d$ = 170 ng/J (or 0.40 lb/MMBtu);

$H_c$ = Heat input from the combustion of coal, in J (MMBtu); and

$H_d$ = Heat input from the combustion of oil, in J (MMBtu).

For facilities complying with the percent reduction standard, only the heat input supplied to the affected facility from the combustion of coal and oil is counted in this paragraph. No credit is provided for the heat input to the affected facility from the combustion of natural gas, wood, municipal-type solid waste, or other fuels, or from the heat input derived from exhaust gases from other sources, such as gas turbines, internal combustion engines, kilns, etc.

(d) On and after the date on which the performance test is completed or required to be completed under § 60.8, whichever comes first, no owner or operator of an affected facility that commenced construction, reconstruction, or modification on or before February 28, 2005 and listed in paragraphs (d)(1), (2), (3), or (4) of this section shall cause to be discharged into the atmosphere any gases that contain $SO_2$ in excess of 520 ng/J (1.2 lb/MMBtu) heat input if the affected facility combusts coal, or 215 ng/J (0.5 lb/MMBtu) heat input if the affected facility combusts oil other than very low sulfur oil. Percent reduction requirements are not applicable to affected facilities under paragraphs (d)(1), (2), (3) or (4) of this section. For facilities complying with paragraphs (d)(1), (2), or (3) of this section, only the heat input supplied to the affected facility from the combustion of coal and oil is counted in this paragraph. No credit is provided for the heat input to the affected facility from the combustion of natural gas, wood, municipal-type solid waste, or other fuels or heat derived from exhaust gases from other sources, such as gas turbines, internal combustion engines, kilns, etc.

(1) Affected facilities that have an annual capacity factor for coal and oil of 30 percent (0.30) or less and are subject to a federally enforceable permit limiting the operation of the affected facility to an annual capacity factor for coal and oil of 30 percent (0.30) or less;

(2) Affected facilities located in a noncontinental area; or

(3) Affected facilities combusting coal or oil, alone or in combination with any fuel, in a duct burner as part of a combined cycle system where 30 percent (0.30) or less of the heat entering the steam generating unit is from combustion of coal and oil in the duct burner and 70 percent (0.70) or more of the heat entering the steam generating unit is from the exhaust gases entering the duct burner; or

(4) The affected facility burns coke oven gas alone or in combination with natural gas or very low sulfur distillate oil.

(e) Except as provided in paragraph (f) of this section, compliance with the emission limits, fuel oil sulfur limits, and/or percent reduction requirements under this section are determined on a 30-day rolling average basis.

(f) Except as provided in paragraph (j)(2) of this section, compliance with the emission limits or fuel oil sulfur limits under this section is determined on a 24-hour average basis for affected facilities that (1) have a federally enforceable permit limiting the annual capacity factor for oil to 10 percent or less, (2) combust only very low sulfur oil, and (3) do not combust any other fuel.

(g) Except as provided in paragraph (i) of this section and § 60.45b(a), the $SO_2$ emission limits and percent reduction requirements under this section apply at all times, including periods of startup, shutdown, and malfunction.

(h) Reductions in the potential $SO_2$ emission rate through fuel pretreatment are not credited toward the percent reduction requirement under paragraph (c) of this section unless:

(1) Fuel pretreatment results in a 50 percent or greater reduction in potential $SO_2$ emissions and

(2) Emissions from the pretreated fuel (without combustion or post-combustion $SO_2$ control) are equal to or less than the emission limits specified in paragraph (c) of this section.

(i) An affected facility subject to paragraph (a), (b), or (c) of this section may combust very low sulfur oil or natural gas when the $SO_2$ control system is not being operated because of malfunction or maintenance of the $SO_2$ control system.

(j) Percent reduction requirements are not applicable to affected facilities combusting only very low sulfur oil. The owner or operator of an affected facility combusting very low sulfur oil shall demonstrate that the oil meets the definition of very low sulfur oil by: (1) Following the performance testing procedures as described in § 60.45b(c) or § 60.45b(d), and following the monitoring procedures as described in § 60.47b(a) or § 60.47b(b) to determine $SO_2$ emission rate or fuel oil sulfur content; or (2) maintaining fuel records as described in § 60.49b(r).

(k)(1) Except as provided in paragraphs (k)(2), (k)(3), and (k)(4) of this section, on and after the date on which the initial performance test is completed or is required to be completed under § 60.8, whichever date comes first, no owner or operator of an affected facility that commences construction, reconstruction, or modification after February 28, 2005, and that combusts coal, oil, natural gas, a mixture of these fuels, or a mixture of these fuels with any other fuels shall cause to be discharged into the atmosphere any gases that contain $SO_2$ in excess of 87 ng/J (0.20 lb/MMBtu) heat input or 8 percent (0.08) of the potential $SO_2$ emission rate (92 percent reduction) and 520 ng/J (1.2 lb/MMBtu) heat input. For facilities complying with the percent reduction standard and paragraph (k)(3) of this section, only the heat input supplied to the affected facility from the combustion of coal and oil is counted in paragraph (k) of this section. No credit is provided for the heat input to the affected facility from the combustion of natural gas, wood, municipal-type solid waste, or other fuels or heat derived from exhaust gases from other sources, such as gas turbines, internal combustion engines, kilns, etc.

(2) Units firing only very low sulfur oil, gaseous fuel, a mixture of these fuels, or a mixture of these fuels with any other fuels with a potential $SO_2$ emission rate of 140 ng/J (0.32 lb/MMBtu) heat input or less are exempt from the $SO_2$ emissions limit in paragraph (k)(1) of this section.

(3) Units that are located in a noncontinental area and that combust coal, oil, or natural gas shall not discharge any gases that contain $SO_2$ in excess of 520 ng/J (1.2 lb/MMBtu) heat input if the affected facility combusts coal, or 215 ng/J (0.50 lb/MMBtu) heat input if the affected facility combusts oil or natural gas.

(4) As an alternative to meeting the requirements under paragraph (k)(1) of this section, modified facilities that combust coal or a mixture of coal with other fuels shall not cause to be discharged into the atmosphere any gases that contain $SO_2$ in excess of 87 ng/J (0.20 lb/MMBtu) heat input or 10 percent (0.10) of the potential $SO_2$ emission rate (90 percent reduction) and 520 ng/J (1.2 lb/MMBtu) heat input.

[72 FR 32742, June 13, 2007, as amended at 74 FR 5084, Jan. 28, 2009; 76 FR 3523, Jan. 20, 2011]

**§ 60.43b Standard for particulate matter (PM).**

(a) On and after the date on which the initial performance test is completed or is required to be completed under § 60.8, whichever comes first, no owner or operator of an affected facility that commenced construction, reconstruction, or modification on or before February 28, 2005 that combusts coal or combusts mixtures of coal with other fuels, shall cause to be discharged into the atmosphere from that affected facility any gases that contain PM in excess of the following emission limits:

(1) 22 ng/J (0.051 lb/MMBtu) heat input, (i) If the affected facility combusts only coal, or

(ii) If the affected facility combusts coal and other fuels and has an annual capacity factor for the other fuels of 10 percent (0.10) or less.

(2) 43 ng/J (0.10 lb/MMBtu) heat input if the affected facility combusts coal and other fuels and has an annual capacity factor for the other fuels greater than 10 percent (0.10) and is subject to a federally enforceable requirement limiting operation of the affected facility to an annual capacity factor greater than 10 percent (0.10) for fuels other than coal.

(3) 86 ng/J (0.20 lb/MMBtu) heat input if the affected facility combusts coal or coal and other fuels and

(i) Has an annual capacity factor for coal or coal and other fuels of 30 percent (0.30) or less,

(ii) Has a maximum heat input capacity of 73 MW (250 MMBtu/hr) or less,

(iii) Has a federally enforceable requirement limiting operation of the affected facility to an annual capacity factor of 30 percent (0.30) or less for coal or coal and other solid fuels, and

(iv) Construction of the affected facility commenced after June 19, 1984, and before November 25, 1986.

(4) An affected facility burning coke oven gas alone or in combination with other fuels not subject to a PM standard under § 60.43b and not using a post-combustion technology (except a wet scrubber) for reducing PM or $SO_2$ emissions is not subject to the PM limits under § 60.43b(a).

(b) On and after the date on which the performance test is completed or required to be completed under § 60.8, whichever comes first, no owner or operator of an affected facility that commenced construction, reconstruction, or modification on or before February 28, 2005, and that combusts oil (or mixtures of oil with other fuels) and uses a conventional or emerging technology to reduce $SO_2$ emissions shall cause to be discharged into the atmosphere from that affected facility any gases that contain PM in excess of 43 ng/J (0.10 lb/MMBtu) heat input.

(c) On and after the date on which the initial performance test is completed or is required to be completed under § 60.8, whichever comes first, no owner or operator of an affected facility that commenced construction, reconstruction, or modification on or before February 28, 2005, and that combusts wood, or wood with other fuels, except coal, shall cause to be discharged from that affected facility any gases that contain PM in excess of the following emission limits:

(1) 43 ng/J (0.10 lb/MMBtu) heat input if the affected facility has an annual capacity factor greater than 30 percent (0.30) for wood.

(2) 86 ng/J (0.20 lb/MMBtu) heat input if (i) The affected facility has an annual capacity factor of 30 percent (0.30) or less for wood;

(ii) Is subject to a federally enforceable requirement limiting operation of the affected facility to an annual capacity factor of 30 percent (0.30) or less for wood; and

(iii) Has a maximum heat input capacity of 73 MW (250 MMBtu/hr) or less.

(d) On and after the date on which the initial performance test is completed or is required to be completed under § 60.8, whichever date comes first, no owner or operator of an affected facility that combusts municipal-type solid waste or mixtures of municipal-type solid waste with other fuels, shall cause to be discharged into the atmosphere from that affected facility any gases that contain PM in excess of the following emission limits:

(1) 43 ng/J (0.10 lb/MMBtu) heat input;

(i) If the affected facility combusts only municipal-type solid waste; or

(ii) If the affected facility combusts municipal-type solid waste and other fuels and has an annual capacity factor for the other fuels of 10 percent (0.10) or less.

(2) 86 ng/J (0.20 lb/MMBtu) heat input if the affected facility combusts municipal-type solid waste or municipal-type solid waste and other fuels; and

(i) Has an annual capacity factor for municipal-type solid waste and other fuels of 30 percent (0.30) or less;

(ii) Has a maximum heat input capacity of 73 MW (250 MMBtu/hr) or less;

(iii) Has a federally enforceable requirement limiting operation of the affected facility to an annual capacity factor of 30 percent (0.30) or less for municipal-type solid waste, or municipal-type solid waste and other fuels; and

(iv) Construction of the affected facility commenced after June 19, 1984, but on or before November 25, 1986.

(e) For the purposes of this section, the annual capacity factor is determined by dividing the actual heat input to the steam generating unit during the calendar year from the combustion of coal, wood, or municipal-type solid waste, and other fuels, as applicable, by the potential heat input to the steam generating unit if the steam generating unit had been operated for 8,760 hours at the maximum heat input capacity.

(f) On and after the date on which the initial performance test is completed or is required to be completed under § 60.8, whichever date comes first, no owner or operator of an affected facility that combusts coal, oil, wood, or mixtures of these fuels with any other fuels shall cause to be discharged into the atmosphere any gases that exhibit greater than 20 percent opacity (6-minute average), except for one 6-minute period per hour of not more than 27 percent opacity. An owner or operator of an affected facility that elects to install, calibrate, maintain, and operate a continuous emissions monitoring system (CEMS) for measuring PM emissions according to the requirements of this subpart and is subject to a federally enforceable PM limit of 0.030 lb/MMBtu or less is exempt from the opacity standard specified in this paragraph.

(g) The PM and opacity standards apply at all times, except during periods of startup, shutdown, or malfunction.

(h)(1) Except as provided in paragraphs (h)(2), (h)(3), (h)(4), (h)(5), and (h)(6) of this section, on and after the date on which the initial performance test is completed or is required to be completed under § 60.8, whichever date comes first, no owner or operator of an affected facility that commenced construction, reconstruction, or modification after February 28, 2005, and that combusts coal, oil, wood, a mixture of these fuels, or a mixture of these fuels with any other fuels shall cause to be discharged into the atmosphere from that affected facility any gases that contain PM in excess of 13 ng/J (0.030 lb/MMBtu) heat input,

(2) As an alternative to meeting the requirements of paragraph (h)(1) of this section, the owner or operator of an affected facility for which modification commenced after February 28, 2005, may elect to meet the requirements of this paragraph. On and after the date on which the initial performance test is completed or required to be completed under § 60.8, no owner or operator of an affected facility that commences modification after February 28, 2005 shall cause to be discharged into the atmosphere from that affected facility any gases that contain PM in excess of both:

(i) 22 ng/J (0.051 lb/MMBtu) heat input derived from the combustion of coal, oil, wood, a mixture of these fuels, or a mixture of these fuels with any other fuels; and

(ii) 0.2 percent of the combustion concentration (99.8 percent reduction) when combusting coal, oil, wood, a mixture of these fuels, or a mixture of these fuels with any other fuels.

(3) On and after the date on which the initial performance test is completed or is required to be completed under § 60.8, whichever date comes first, no owner or operator of an affected facility that commences modification after February 28, 2005, and that combusts over 30 percent wood (by heat input) on an annual basis and has a maximum heat input capacity of 73 MW (250 MMBtu/h) or less shall cause to be discharged into the atmosphere from that affected facility any gases that contain PM in excess of 43 ng/J (0.10 lb/MMBtu) heat input.

(4) On and after the date on which the initial performance test is completed or is required to be completed under § 60.8, whichever date comes first, no owner or operator of an affected facility that commences modification after February 28, 2005, and that combusts over 30 percent wood (by heat input) on an annual basis and has a maximum heat input capacity greater than 73 MW (250 MMBtu/h) shall cause to be discharged into the atmosphere from that affected facility any gases that contain PM in excess of 37 ng/J (0.085 lb/MMBtu) heat input.

(5) On and after the date on which the initial performance test is completed or is required to be completed under § 60.8, whichever date comes first, an owner or operator of an affected facility not located in a noncontinental area that commences construction, reconstruction, or modification after February 28, 2005, and that combusts only oil that contains no more than 0.30 weight percent sulfur, coke oven gas, a mixture of these fuels, or either fuel (or a mixture of these fuels) in combination with other fuels not subject to a PM standard in § 60.43b and not using a post-combustion technology (except a wet scrubber) to reduce $SO_2$ or PM emissions is not subject to the PM limits in (h)(1) of this section.

(6) On and after the date on which the initial performance test is completed or is required to be completed under § 60.8, whichever date comes first, an owner or operator of an affected facility located in a noncontinental area that commences construction, reconstruction, or modification after February 28, 2005, and that combusts only oil that contains no more than 0.5 weight percent sulfur, coke oven gas, a mixture of these fuels, or either fuel (or a mixture of these fuels) in combination with other fuels not subject to a PM standard in § 60.43b and not using a post-combustion technology (except a wet scrubber) to reduce $SO_2$ or PM emissions is not subject to the PM limits in (h)(1) of this section.

[72 FR 32742, June 13, 2007, as amended at 74 FR 5084, Jan. 28, 2009; 77 FR 9459, Feb. 16, 2012]

**§ 60.44b Standard for nitrogen oxides (NOX ).**

(a) Except as provided under paragraphs (k) and (l) of this section, on and after the date on which the initial performance test is completed or is required to be completed under § 60.8, whichever date comes first, no owner or operator of an affected facility that is subject to the provisions of this section and that combusts only coal, oil, or natural gas shall cause to be discharged into the atmosphere from that affected facility any gases that contain $NO_X$ (expressed as $NO_2$ ) in excess of the following emission limits:

| Fuel/steam generating unit type | Nitrogen oxide emission limits (expressed as $NO_2$) heat input | |
|---|---|---|
| | ng/J | lb/MMBTu |
| (1) Natural gas and distillate oil, except (4): | | |
| (i) Low heat release rate | 43 | 0.10 |
| (ii) High heat release rate | 86 | 0.20 |
| (2) Residual oil: | | |
| (i) Low heat release rate | 130 | 0.30 |
| (ii) High heat release rate | 170 | 0.40 |
| (3) Coal: | | |
| (i) Mass-feed stoker | 210 | 0.50 |
| (ii) Spreader stoker and fluidized bed combustion | 260 | 0.60 |
| (iii) Pulverized coal | 300 | 0.70 |

| Fuel/steam generating unit type | Nitrogen oxide emission limits (expressed as $NO_2$) heat input | |
|---|---|---|
| | ng/J | lb/MMBTu |
| (iv) Lignite, except (v) | 260 | 0.60 |
| (v) Lignite mined in North Dakota, South Dakota, or Montana and combusted in a slag tap furnace | 340 | 0.80 |
| (vi) Coal-derived synthetic fuels | 210 | 0.50 |
| (4) Duct burner used in a combined cycle system: | | |
| (i) Natural gas and distillate oil | 86 | 0.20 |
| (ii) Residual oil | 170 | 0.40 |

(b) Except as provided under paragraphs (k) and (l) of this section, on and after the date on which the initial performance test is completed or is required to be completed under § 60.8, whichever date comes first, no owner or operator of an affected facility that simultaneously combusts mixtures of only coal, oil, or natural gas shall cause to be discharged into the atmosphere from that affected facility any gases that contain $NO_X$ in excess of a limit determined by the use of the following formula:

$$E_n = \frac{(EL_{go}H_{go}) + (EL_{ro}H_{ro}) + (EL_cH_c)}{(H_{go} + H_{ro} + H_c)}$$

Where:

$E_n$ = $NO_X$ emission limit (expressed as $NO_2$ ), ng/J (lb/MMBtu);

$EL_{go}$ = Appropriate emission limit from paragraph (a)(1) for combustion of natural gas or distillate oil, ng/J (lb/MMBtu);

$H_{go}$ = Heat input from combustion of natural gas or distillate oil, J (MMBtu);

$EL_{ro}$ = Appropriate emission limit from paragraph (a)(2) for combustion of residual oil, ng/J (lb/MMBtu);

$H_{ro}$ = Heat input from combustion of residual oil, J (MMBtu);

$EL_c$ = Appropriate emission limit from paragraph (a)(3) for combustion of coal, ng/J (lb/MMBtu); and

$H_c$ = Heat input from combustion of coal, J (MMBtu).

(c) Except as provided under paragraph (d) and (l) of this section, on and after the date on which the initial performance test is completed or is required to be completed under § 60.8, whichever date comes first, no owner or operator of an affected facility that simultaneously combusts coal or oil, natural gas (or any combination of the three), and wood, or any other fuel shall cause to be discharged into the atmosphere any gases that contain $NO_X$ in excess of the emission limit for the coal, oil, natural gas (or any combination of the three), combusted in the affected facility, as determined pursuant to paragraph (a) or (b) of this section. This standard does not apply to an affected facility that is subject to and in compliance with a federally enforceable requirement that limits operation of the affected facility to an annual capacity factor of 10 percent (0.10) or less for coal, oil, natural gas (or any combination of the three).

(d) On and after the date on which the initial performance test is completed or is required to be completed under § 60.8, whichever date comes first, no owner or operator of an affected facility that simultaneously combusts natural gas and/or distillate oil with a potential $SO_2$ emissions rate of 26 ng/J (0.060 lb/MMBtu) or less with wood, municipal-type solid waste, or other solid fuel, except coal, shall cause to be discharged into the atmosphere from that affected facility any gases that contain $NO_X$ in excess of 130 ng/J (0.30 lb/MMBtu) heat input unless the affected facility has an annual capacity factor for natural gas, distillate oil, or a mixture of these fuels of 10 percent (0.10) or less and is subject to a federally enforceable requirement that limits operation of the affected facility to an annual capacity factor of 10 percent (0.10) or less for natural gas, distillate oil, or a mixture of these fuels.

(e) Except as provided under paragraph (l) of this section, on and after the date on which the initial performance test is completed or is required to be completed under § 60.8, whichever date comes first, no owner or operator of an affected facility that simultaneously combusts only coal, oil, or natural gas with byproduct/waste shall cause to be discharged into the atmosphere any gases that contain $NO_X$ in excess of the emission limit determined by the following formula unless the affected facility has an annual capacity factor for coal, oil, and natural gas of 10 percent (0.10) or less and is subject to a federally enforceable requirement that limits operation of the affected facility to an annual capacity factor of 10 percent (0.10) or less:

(f) Any owner or operator of an affected facility that combusts byproduct/waste with either natural gas or oil may petition the Administrator within 180 days of the initial startup of the affected facility to establish a $NO_X$ emission limit that shall apply specifically to that affected facility when the byproduct/waste is combusted. The petition shall include sufficient and appropriate data, as determined by the Administrator, such as $NO_X$ emissions from the affected facility, waste composition (including nitrogen content), and combustion conditions to allow the Administrator to confirm that the affected facility is unable to comply with the emission limits in paragraph (e) of this section and to determine the appropriate emission limit for the affected facility.

(1) Any owner or operator of an affected facility petitioning for a facility-specific $NO_X$ emission limit under this section shall:

(i) Demonstrate compliance with the emission limits for natural gas and distillate oil in paragraph (a)(1) of this section or for residual oil in paragraph (a)(2) or (l)(1) of this section, as appropriate, by conducting a 30-day performance test as provided in § 60.46b(e). During the performance test only natural gas, distillate oil, or residual oil shall be combusted in the affected facility; and

(ii) Demonstrate that the affected facility is unable to comply with the emission limits for natural gas and distillate oil in paragraph (a)(1) of this section or for residual oil in paragraph (a)(2) or (l)(1) of this section, as appropriate, when gaseous or liquid byproduct/waste is combusted in the affected facility under the same conditions and using the same technological system of emission reduction applied when demonstrating compliance under paragraph (f)(1)(i) of this section.

(2) The $NO_X$ emission limits for natural gas or distillate oil in paragraph (a)(1) of this section or for residual oil in paragraph (a)(2) or (l)(1) of this section, as appropriate, shall be applicable to the affected facility until and unless the petition is approved by the Administrator. If the petition is approved by the Administrator, a facility-specific $NO_X$ emission limit will be established at the $NO_X$ emission level achievable when the affected facility is combusting oil or natural gas and byproduct/waste in a manner that the Administrator determines to be consistent with minimizing $NO_X$ emissions. In lieu of amending this subpart, a letter will be sent to the facility describing the facility-specific $NO_X$ limit. The facility shall use the compliance procedures detailed in the letter and make the letter available to the public. If the Administrator determines it is appropriate, the conditions and requirements of the letter can be reviewed and changed at any point.

(g) Any owner or operator of an affected facility that combusts hazardous waste (as defined by 40 CFR part 261 or 40 CFR part 761) with natural gas or oil may petition the Administrator within 180 days of the initial startup of the affected facility for a waiver from compliance with the $NO_X$ emission limit that applies specifically to that affected facility. The petition must include sufficient and appropriate data, as determined by the Administrator, on $NO_X$ emissions from the affected facility, waste destruction efficiencies, waste composition (including nitrogen content), the quantity of specific wastes to be combusted and combustion conditions to allow the Administrator to determine if the affected facility is able to comply with the $NO_X$ emission limits required by this section. The owner or operator of the affected facility shall demonstrate that when hazardous waste is combusted in the affected facility, thermal destruction efficiency requirements for hazardous waste specified in an applicable federally enforceable requirement preclude compliance with the $NO_X$ emission limits of this section. The $NO_X$ emission limits for natural gas or distillate oil in paragraph (a)(1) of this section or for residual oil in paragraph (a)(2) or (l)(1) of this section, as appropriate, are applicable to the affected facility until and unless the petition is approved by the Administrator. (See 40 CFR 761.70 for regulations applicable to the incineration of materials containing polychlorinated biphenyls (PCB's).) In lieu of amending this subpart, a letter will be sent to the facility describing the facility-specific $NO_X$ limit. The facility shall use the compliance procedures detailed in the letter and make the letter available to the public. If the Administrator determines it is appropriate, the conditions and requirements of the letter can be reviewed and changed at any point.

(h) For purposes of paragraph (i) of this section, the $NO_X$ standards under this section apply at all times including periods of startup, shutdown, or malfunction.

(i) Except as provided under paragraph (j) of this section, compliance with the emission limits under this section is determined on a 30-day rolling average basis.

(j) Compliance with the emission limits under this section is determined on a 24-hour average basis for the initial performance test and on a 3-hour average basis for subsequent performance tests for any affected facilities that:

(1) Combust, alone or in combination, only natural gas, distillate oil, or residual oil with a nitrogen content of 0.30 weight percent or less;

(2) Have a combined annual capacity factor of 10 percent or less for natural gas, distillate oil, and residual oil with a nitrogen content of 0.30 weight percent or less; and

(3) Are subject to a federally enforceable requirement limiting operation of the affected facility to the firing of natural gas, distillate oil, and/or residual oil with a nitrogen content of 0.30 weight percent or less and limiting operation of the affected facility to a combined annual capacity factor of 10 percent or less for natural gas, distillate oil, and residual oil with a nitrogen content of 0.30 weight percent or less.

(k) Affected facilities that meet the criteria described in paragraphs (j)(1), (2), and (3) of this section, and that have a heat input capacity of 73 MW (250 MMBtu/hr) or less, are not subject to the $NO_X$ emission limits under this section.

(l) On and after the date on which the initial performance test is completed or is required to be completed under 60.8, whichever date is first, no owner or operator of an affected facility that commenced construction after July 9, 1997 shall cause to be discharged into the atmosphere from that affected facility any gases that contain NOx (expressed as NO2) in excess of the following limits:

(1) 86 ng/J (0.20 lb/MMBtu) heat input if the affected facility combusts coal, oil, or natural gas (or any combination of the three), alone or with any other fuels. The affected facility is not subject to this limit if it is subject to and in compliance with a federally enforceable requirement that limits operation of the facility to an annual capacity factor of 10 percent (0.10) or less for coal, oil, and natural gas (or any combination of the three); or

(2) If the affected facility has a low heat release rate and combusts natural gas or distillate oil in excess of 30 percent of the heat input on a 30-day rolling average from the combustion of all fuels, a limit determined by use of the following formula:

$$E_n = \frac{(0.10 \times H_{go}) + (0.20 \times H_r)}{(H_{go} + H_r)}$$

Where:

$E_n$ = $NO_X$ emission limit, (lb/MMBtu);

$H_{go}$ = 30-day heat input from combustion of natural gas or distillate oil; and

$H_r$ = 30-day heat input from combustion of any other fuel.

(3) After February 27, 2006, units where more than 10 percent of total annual output is electrical or mechanical may comply with an optional limit of 270 ng/J (2.1 lb/MWh) gross energy output, based on a 30-day rolling average. Units complying with this output-based limit must demonstrate compliance according to the procedures of § 60.48Da(i) of subpart Da of this part, and must monitor emissions according to § 60.49Da(c), (k), through (n) of subpart Da of this part.

[72 FR 32742, June 13, 2007, as amended at 74 FR 5086, Jan. 28, 2009; 77 FR 9459, Feb. 16, 2012]

**§ 60.45b Compliance and performance test methods and procedures for sulfur dioxide.**

(a) The $SO_2$ emission standards in § 60.42b apply at all times. Facilities burning coke oven gas alone or in combination with any other gaseous fuels or distillate oil are allowed to exceed the limit 30 operating days per calendar year for $SO_2$ control system maintenance.

(b) In conducting the performance tests required under § 60.8, the owner or operator shall use the methods and procedures in appendix A (including fuel certification and sampling) of this part or the methods and procedures as specified in this section, except as provided in § 60.8(b). Section 60.8(f) does not apply to this section. The 30-day notice required in § 60.8(d) applies only to the initial performance test unless otherwise specified by the Administrator.

(c) The owner or operator of an affected facility shall conduct performance tests to determine compliance with the percent of potential $SO_2$ emission rate (% $P_s$ ) and the $SO_2$ emission rate ($E_s$ ) pursuant to § 60.42b following the procedures listed below, except as provided under paragraph (d) and (k) of this section.

(1) The initial performance test shall be conducted over 30 consecutive operating days of the steam generating unit. Compliance with the $SO_2$ standards shall be determined using a 30-day average. The first operating day included in the initial performance test shall be scheduled within 30 days after achieving the maximum production rate at which the affected facility will be operated, but not later than 180 days after initial startup of the facility.

(2) If only coal, only oil, or a mixture of coal and oil is combusted, the following procedures are used:

(i) The procedures in Method 19 of appendix A-7 of this part are used to determine the hourly $SO_2$ emission rate ($E_{ho}$ ) and the 30-day average emission rate ($E_{ao}$ ). The hourly averages used to compute the 30-day averages are obtained from the CEMS of § 60.47b(a) or (b).

(ii) The percent of potential $SO_2$ emission rate (%$P_s$ ) emitted to the atmosphere is computed using the following formula:

$$\%P_s = 100\left(1 - \frac{\%R_g}{100}\right)\left(1 - \frac{\%R_f}{100}\right)$$

Where:

%$P_s$ = Potential $SO_2$ emission rate, percent;

%$R_g$ = $SO_2$ removal efficiency of the control device as determined by Method 19 of appendix A of this part, in percent; and

%$R_f$ = $SO_2$ removal efficiency of fuel pretreatment as determined by Method 19 of appendix A of this part, in percent.

(3) If coal or oil is combusted with other fuels, the same procedures required in paragraph (c)(2) of this section are used, except as provided in the following:

(i) An adjusted hourly $SO_2$ emission rate ($E_{ho}{}^{o}$ ) is used in Equation 19-19 of Method 19 of appendix A of this part to compute an adjusted 30-day average emission rate (Eao o ). The Eho° is computed using the following formula:

$$E_{ho}^{o} = \frac{E_{ho} - E_w(1 - X_1)}{X_1}$$

Where:

$E_{ho}{}^{o}$ = Adjusted hourly $SO_2$ emission rate, ng/J (lb/MMBtu);

$E_{ho}$ = Hourly $SO_2$ emission rate, ng/J (lb/MMBtu);

$E_w$ = $SO_2$ concentration in fuels other than coal and oil combusted in the affected facility, as determined by the fuel sampling and analysis procedures in Method 19 of appendix A of this part, ng/J (lb/MMBtu). The value $E_w$ for each fuel lot is used for each hourly average during the time that the lot is being combusted; and

$X_k$ = Fraction of total heat input from fuel combustion derived from coal, oil, or coal and oil, as determined by applicable procedures in Method 19 of appendix A of this part.

(ii) To compute the percent of potential $SO_2$ emission rate ($\%P_s$ ), an adjusted $\%R_g$ ($\%R_g{}^o$ ) is computed from the adjusted Eao o from paragraph (b)(3)(i) of this section and an adjusted average SO2 inlet rate (Eai o ) using the following formula:

$$\%R_g^o = 100\left(1.0 - \frac{E_{ao}^o}{E_{ai}^o}\right)$$

To compute Eai o , an adjusted hourly SO2 inlet rate (Ehi o ) is used. The Ehi o is computed using the following formula:

$$E_{hi}^o = \frac{E_{hi} - E_w(1 - X_k)}{X_k}$$

Where:

Ehi o = Adjusted hourly SO2 inlet rate, ng/J (lb/MMBtu); and

$E_{hi}$ = Hourly $SO_2$ inlet rate, ng/J (lb/MMBtu).

(4) The owner or operator of an affected facility subject to paragraph (c)(3) of this section does not have to measure parameters $E_w$ or $X_k$ if the owner or operator elects to assume that $X_k$ = 1.0. Owners or operators of affected facilities who assume $X_k$ = 1.0 shall:

(i) Determine $\%P_s$ following the procedures in paragraph (c)(2) of this section; and

(ii) Sulfur dioxide emissions ($E_s$ ) are considered to be in compliance with $SO_2$ emission limits under § 60.42b.

(5) The owner or operator of an affected facility that qualifies under the provisions of § 60.42b(d) does not have to measure parameters $E_w$ or $X_k$ in paragraph (c)(3) of this section if the owner or operator of the affected facility elects to measure $SO_2$ emission rates of the coal or oil following the fuel sampling and analysis procedures in Method 19 of appendix A-7 of this part.

(d) Except as provided in paragraph (j) of this section, the owner or operator of an affected facility that combusts only very low sulfur oil, natural gas, or a mixture of these fuels, has an annual capacity factor for oil of 10 percent (0.10) or less, and is subject to a federally enforceable requirement limiting operation of the affected facility to an annual capacity factor for oil of 10 percent (0.10) or less shall:

(1) Conduct the initial performance test over 24 consecutive steam generating unit operating hours at full load;

(2) Determine compliance with the standards after the initial performance test based on the arithmetic average of the hourly emissions data during each steam generating unit operating day if a CEMS is used, or based on a daily average if Method 6B of appendix A of this part or fuel sampling and analysis procedures under Method 19 of appendix A of this part are used.

(e) The owner or operator of an affected facility subject to § 60.42b(d)(1) shall demonstrate the maximum design capacity of the steam generating unit by operating the facility at maximum capacity for 24 hours. This demonstration will be made during the initial performance test and a subsequent demonstration may be requested at any other time. If the 24-hour average firing rate for the affected facility is less than the maximum design capacity provided by the manufacturer of the affected facility, the 24-hour average firing rate shall be used to determine the capacity utilization rate for the affected facility, otherwise the maximum design capacity provided by the manufacturer is used.

(f) For the initial performance test required under § 60.8, compliance with the $SO_2$ emission limits and percent reduction requirements under § 60.42b is based on the average emission rates and the average percent reduction for $SO_2$ for the first 30 consecutive steam generating unit operating days, except as provided under paragraph (d) of this section. The initial performance test is the only test for which at least 30 days prior notice is required unless otherwise specified by the Administrator. The initial performance test is to be scheduled so that the first steam generating unit operating day of the 30 successive steam generating unit operating days is completed within 30 days after achieving the maximum production rate at which the affected facility will be operated, but not later than 180 days after initial startup of the facility. The boiler load during the 30-day period does not have to be the maximum design load, but must be representative of future operating conditions and include at least one 24-hour period at full load.

(g) After the initial performance test required under § 60.8, compliance with the $SO_2$ emission limits and percent reduction requirements under § 60.42b is based on the average emission rates and the average percent reduction for $SO_2$ for 30 successive steam generating unit operating days, except as provided under paragraph (d). A separate performance test is completed at the end of each steam generating unit operating day after the initial performance test, and a new 30-day average emission rate and percent reduction for $SO_2$ are calculated to show compliance with the standard.

(h) Except as provided under paragraph (i) of this section, the owner or operator of an affected facility shall use all valid $SO_2$ emissions data in calculating $\%P_s$ and $E_{ho}$ under paragraph (c), of this section whether or not the minimum emissions data requirements under § 60.46b are achieved. All valid emissions data, including valid $SO_2$ emission data collected during periods of startup, shutdown and malfunction, shall be used in calculating $\%P_s$ and $E_{ho}$ pursuant to paragraph (c) of this section.

(i) During periods of malfunction or maintenance of the $SO_2$ control systems when oil is combusted as provided under § 60.42b(i), emission data are not used to calculate $\%P_s$ or $E_s$ under § 60.42b(a), (b) or (c), however, the emissions data are used to determine compliance with the emission limit under § 60.42b(i).

(j) The owner or operator of an affected facility that only combusts very low sulfur oil, natural gas, or a mixture of these fuels with any other fuels not subject to an $SO_2$ standard is not subject to the compliance and performance testing requirements of this section if the owner or operator obtains fuel receipts as described in § 60.49b(r).

(k) The owner or operator of an affected facility seeking to demonstrate compliance in §§ 60.42b(d)(4), 60.42b(j), 60.42b(k)(2), and 60.42b(k)(3) (when not burning coal) shall follow the applicable procedures in § 60.49b(r).

[72 FR 32742, June 13, 2007, as amended at 74 FR 5086, Jan. 28, 2009]

**§ 60.46b Compliance and performance test methods and procedures for particulate matter and nitrogen oxides.**

(a) The PM emission standards and opacity limits under § 60.43b apply at all times except during periods of startup, shutdown, or malfunction. The $NO_X$ emission standards under § 60.44b apply at all times.

(b) Compliance with the PM emission standards under § 60.43b shall be determined through performance testing as described in paragraph (d) of this section, except as provided in paragraph (i) of this section.

(c) Compliance with the $NO_X$ emission standards under § 60.44b shall be determined through performance testing under paragraph (e) or (f), or under paragraphs (g) and (h) of this section, as applicable.

(d) To determine compliance with the PM emission limits and opacity limits under § 60.43b, the owner or operator of an affected facility shall conduct an initial performance test as required under § 60.8, and shall conduct subsequent performance tests as requested by the Administrator, using the following procedures and reference methods:

(1) Method 3A or 3B of appendix A-2 of this part is used for gas analysis when applying Method 5 of appendix A-3 of this part or Method 17 of appendix A-6 of this part.

(2) Method 5, 5B, or 17 of appendix A of this part shall be used to measure the concentration of PM as follows:

(i) Method 5 of appendix A of this part shall be used at affected facilities without wet flue gas desulfurization (FGD) systems; and

(ii) Method 17 of appendix A-6 of this part may be used at facilities with or without wet scrubber systems provided the stack gas temperature does not exceed a temperature of 160 °C (320 °F). The procedures of sections 8.1 and 11.1 of Method 5B of appendix A-3 of this part may be used in Method 17 of appendix A-6 of this part only if it is used after a wet FGD system. Do not use Method 17 of appendix A-6 of this part after wet FGD systems if the effluent is saturated or laden with water droplets.

(iii) Method 5B of appendix A of this part is to be used only after wet FGD systems.

(3) Method 1 of appendix A of this part is used to select the sampling site and the number of traverse sampling points. The sampling time for each run is at least 120 minutes and the minimum sampling volume is 1.7 dscm (60 dscf) except that smaller sampling times or volumes may be approved by the Administrator when necessitated by process variables or other factors.

(4) For Method 5 of appendix A of this part, the temperature of the sample gas in the probe and filter holder is monitored and is maintained at 160±14 °C (320±25 °F).

(5) For determination of PM emissions, the oxygen ($O_2$ ) or $CO_2$ sample is obtained simultaneously with each run of Method 5, 5B, or 17 of appendix A of this part by traversing the duct at the same sampling location.

(6) For each run using Method 5, 5B, or 17 of appendix A of this part, the emission rate expressed in ng/J heat input is determined using:

(i) The $O_2$ or $CO_2$ measurements and PM measurements obtained under this section;

(ii) The dry basis F factor; and

(iii) The dry basis emission rate calculation procedure contained in Method 19 of appendix A of this part.

(7) Method 9 of appendix A of this part is used for determining the opacity of stack emissions.

(e) To determine compliance with the emission limits for $NO_X$ required under § 60.44b, the owner or operator of an affected facility shall conduct the performance test as required under § 60.8 using the continuous system for monitoring $NO_X$ under § 60.48(b).

(1) For the initial compliance test, $NO_X$ from the steam generating unit are monitored for 30 successive steam generating unit operating days and the 30-day average emission rate is used to determine compliance with the $NO_X$ emission standards under § 60.44b. The 30-day average emission rate is calculated as the average of all hourly emissions data recorded by the monitoring system during the 30-day test period.

(2) Following the date on which the initial performance test is completed or is required to be completed in § 60.8, whichever date comes first, the owner or operator of an affected facility which combusts coal (except as specified under § 60.46b(e)(4)) or which combusts residual oil having a nitrogen content greater than 0.30 weight percent shall determine compliance with the $NO_X$ emission standards in § 60.44b on a continuous basis through the use of a 30-day rolling average emission rate. A new 30-day rolling average emission rate is calculated for each steam generating unit operating day as the average of all of the hourly $NO_X$ emission data for the preceding 30 steam generating unit operating days.

(3) Following the date on which the initial performance test is completed or is required to be completed under § 60.8, whichever date comes first, the owner or operator of an affected facility that has a heat input capacity greater than 73 MW (250 MMBtu/hr) and that combusts natural gas, distillate oil, or residual oil having a nitrogen content of 0.30 weight percent or less shall determine compliance with the $NO_X$ standards under § 60.44b on a continuous basis through the use of a 30-day rolling average emission rate. A new 30-day rolling average emission rate is calculated each steam generating unit operating day as the average of all of the hourly $NO_X$ emission data for the preceding 30 steam generating unit operating days.

(4) Following the date on which the initial performance test is completed or required to be completed under § 60.8, whichever date comes first, the owner or operator of an affected facility that has a heat input capacity of 73 MW (250 MMBtu/hr) or less and that combusts natural gas, distillate oil, gasified coal, or residual oil having a nitrogen content of 0.30 weight percent or less shall upon request determine compliance with the $NO_X$ standards in § 60.44b through the use of a 30-day performance test. During periods when performance tests are not requested, $NO_X$ emissions data collected pursuant to § 60.48b(g)(1) or § 60.48b(g)(2) are used to calculate a 30-day rolling average emission rate on a daily basis and used to prepare excess emission reports, but will not be used to determine compliance with the $NO_X$ emission standards. A new 30-day rolling average emission rate is calculated each steam generating unit operating day as the average of all of the hourly $NO_X$ emission data for the preceding 30 steam generating unit operating days.

(5) If the owner or operator of an affected facility that combusts residual oil does not sample and analyze the residual oil for nitrogen content, as specified in § 60.49b(e), the requirements of § 60.48b(g)(1) apply and the provisions of § 60.48b(g)(2) are inapplicable.

(f) To determine compliance with the emissions limits for $NO_X$ required by § 60.44b(a)(4) or § 60.44b(l) for duct burners used in combined cycle systems, either of the procedures described in paragraph (f)(1) or (2) of this section may be used:

(1) The owner or operator of an affected facility shall conduct the performance test required under § 60.8 as follows:

(i) The emissions rate (E) of $NO_X$ shall be computed using Equation 1 in this section:

$$E = E_{sg} + \left(\frac{H_g}{H_b}\right)\left(E_{sg} - E_g\right) \qquad \text{(Eq.1)}$$

Where:

E = Emissions rate of $NO_X$ from the duct burner, ng/J (lb/MMBtu) heat input;

$E_{sg}$ = Combined effluent emissions rate, in ng/J (lb/MMBtu) heat input using appropriate F factor as described in Method 19 of appendix A of this part;

$H_g$ = Heat input rate to the combustion turbine, in J/hr (MMBtu/hr);

$H_b$ = Heat input rate to the duct burner, in J/hr (MMBtu/hr); and

$E_g$ = Emissions rate from the combustion turbine, in ng/J (lb/MMBtu) heat input calculated using appropriate F factor as described in Method 19 of appendix A of this part.

(ii) Method 7E of appendix A of this part shall be used to determine the $NO_X$ concentrations. Method 3A or 3B of appendix A of this part shall be used to determine $O_2$ concentration.

(iii) The owner or operator shall identify and demonstrate to the Administrator's satisfaction suitable methods to determine the average hourly heat input rate to the combustion turbine and the average hourly heat input rate to the affected duct burner.

(iv) Compliance with the emissions limits under § 60.44b(a)(4) or § 60.44b(l) is determined by the three-run average (nominal 1-hour runs) for the initial and subsequent performance tests; or

(2) The owner or operator of an affected facility may elect to determine compliance on a 30-day rolling average basis by using the CEMS specified under § 60.48b for measuring $NO_X$ and $O_2$ and meet the requirements of § 60.48b. The sampling site shall be located at the outlet from the steam generating unit. The $NO_X$ emissions rate at the outlet from the steam generating unit shall constitute the $NO_X$ emissions rate from the duct burner of the combined cycle system.

(g) The owner or operator of an affected facility described in § 60.44b(j) or § 60.44b(k) shall demonstrate the maximum heat input capacity of the steam generating unit by operating the facility at maximum capacity for 24 hours. The owner or operator of an affected facility shall determine the maximum heat input capacity using the heat loss method or the heat input method described in sections 5 and 7.3 of the ASME *Power Test Codes* 4.1 (incorporated by reference, see § 60.17). This demonstration of maximum heat input capacity shall be made during the initial performance test for affected facilities that meet the criteria of § 60.44b(j). It shall be made within 60 days after achieving the maximum production rate at which the affected facility will be operated, but not later than 180 days after initial start-up of each facility, for affected facilities meeting the criteria of § 60.44b(k). Subsequent demonstrations may be required by the Administrator at any other time. If this demonstration indicates that the maximum heat input capacity of the affected facility is less than that stated by the manufacturer of the affected facility, the maximum heat input capacity determined during this demonstration shall be used to determine the capacity utilization rate for the affected facility. Otherwise, the maximum heat input capacity provided by the manufacturer is used.

(h) The owner or operator of an affected facility described in § 60.44b(j) that has a heat input capacity greater than 73 MW (250 MMBtu/hr) shall:

(1) Conduct an initial performance test as required under § 60.8 over a minimum of 24 consecutive steam generating unit operating hours at maximum heat input capacity to demonstrate compliance with the $NO_X$ emission standards under § 60.44b using Method 7, 7A, 7E of appendix A of this part, or other approved reference methods; and

(2) Conduct subsequent performance tests once per calendar year or every 400 hours of operation (whichever comes first) to demonstrate compliance with the $NO_X$ emission standards under § 60.44b over a minimum of 3 consecutive steam generating unit operating hours at maximum heat input capacity using Method 7, 7A, 7E of appendix A of this part, or other approved reference methods.

(i) The owner or operator of an affected facility seeking to demonstrate compliance with the PM limit in paragraphs § 60.43b(a)(4) or § 60.43b(h)(5) shall follow the applicable procedures in § 60.49b(r).

(j) In place of PM testing with Method 5 or 5B of appendix A-3 of this part, or Method 17 of appendix A-6 of this part, an owner or operator may elect to install, calibrate, maintain, and operate a CEMS for monitoring PM emissions discharged to the atmosphere and record the output of the system. The owner or operator of an affected facility who elects to continuously monitor PM emissions instead of conducting performance testing using Method 5 or 5B of appendix A-3 of this part or Method 17 of appendix A-6 of this part shall comply with the requirements specified in paragraphs (j)(1) through (j)(14) of this section.

(1) Notify the Administrator one month before starting use of the system.

(2) Notify the Administrator one month before stopping use of the system.

(3) The monitor shall be installed, evaluated, and operated in accordance with § 60.13 of subpart A of this part.

(4) The initial performance evaluation shall be completed no later than 180 days after the date of initial startup of the affected facility, as specified under § 60.8 of subpart A of this part or within 180 days of notification to the Administrator of use of the CEMS if the owner or operator was previously determining compliance by Method 5, 5B, or 17 of appendix A of this part performance tests, whichever is later.

(5) The owner or operator of an affected facility shall conduct an initial performance test for PM emissions as required under § 60.8 of subpart A of this part. Compliance with the PM emission limit shall be determined by using the CEMS specified in paragraph (j) of this section to measure PM and calculating a 24-hour block arithmetic average emission concentration using EPA Reference Method 19 of appendix A of this part, section 4.1.

(6) Compliance with the PM emission limit shall be determined based on the 24-hour daily (block) average of the hourly arithmetic average emission concentrations using CEMS outlet data.

(7) At a minimum, valid CEMS hourly averages shall be obtained as specified in paragraphs (j)(7)(i) of this section for 75 percent of the total operating hours per 30-day rolling average.

(i) At least two data points per hour shall be used to calculate each 1-hour arithmetic average.

(ii) [Reserved]

(8) The 1-hour arithmetic averages required under paragraph (j)(7) of this section shall be expressed in ng/J or lb/MMBtu heat input and shall be used to calculate the boiler operating day daily arithmetic average emission concentrations. The 1-hour arithmetic averages shall be calculated using the data points required under § 60.13(e)(2) of subpart A of this part.

(9) All valid CEMS data shall be used in calculating average emission concentrations even if the minimum CEMS data requirements of paragraph (j)(7) of this section are not met.

(10) The CEMS shall be operated according to Performance Specification 11 in appendix B of this part.

(11) During the correlation testing runs of the CEMS required by Performance Specification 11 in appendix B of this part, PM and $O_2$ (or $CO_2$ ) data shall be collected concurrently (or within a 30-to 60-minute period) by both the continuous emission monitors and performance tests conducted using the following test methods.

(i) For PM, Method 5 or 5B of appendix A-3 of this part or Method 17 of appendix A-6 of this part shall be used; and

(ii) For $O_2$ (or $CO_2$ ), Method 3A or 3B of appendix A-2 of this part, as applicable shall be used.

(12) Quarterly accuracy determinations and daily calibration drift tests shall be performed in accordance with procedure 2 in appendix F of this part. Relative Response Audit's must be performed annually and Response Correlation Audits must be performed every 3 years.

(13) When PM emissions data are not obtained because of CEMS breakdowns, repairs, calibration checks, and zero and span adjustments, emissions data shall be obtained by using other monitoring systems as approved by the Administrator or EPA Reference Method 19 of appendix A of this part to provide, as necessary, valid emissions data for a minimum of 75 percent of total operating hours per 30-day rolling average.

(14) As of January 1, 2012, and within 90 days after the date of completing each performance test, as defined in § 60.8, conducted to demonstrate compliance with this subpart, you must submit relative accuracy test audit ( *i.e.,* reference method) data and performance test ( *i.e.,* compliance test) data, except opacity data, electronically to EPA's Central Data Exchange (CDX) by using the Electronic Reporting Tool (ERT) (see *http://www.epa.gov/ttn/chief/ert/ert_tool.html/* ) or other compatible electronic spreadsheet. Only data collected using test methods compatible with ERT are subject to this requirement to be submitted electronically into EPA's WebFIRE database.

[72 FR 32742, June 13, 2007, as amended at 74 FR 5086, Jan. 28, 2009; 76 FR 3523, Jan. 20, 2011; 77 FR 9460, Feb. 16, 2012]

**§ 60.47b Emission monitoring for sulfur dioxide.**

(a) Except as provided in paragraphs (b) and (f) of this section, the owner or operator of an affected facility subject to the $SO_2$ standards in § 60.42b shall install, calibrate, maintain, and operate CEMS for measuring $SO_2$ concentrations and either $O_2$ or $CO_2$ concentrations and shall record the output of the systems. For units complying with the percent reduction standard, the $SO_2$ and either $O_2$ or $CO_2$ concentrations shall both be monitored at the inlet and outlet of the $SO_2$ control device. If the owner or operator has installed and certified $SO_2$ and $O_2$ or $CO_2$ CEMS according to the requirements of § 75.20(c)(1) of this chapter and appendix A to part 75 of this chapter, and is continuing to meet the

ongoing quality assurance requirements of § 75.21 of this chapter and appendix B to part 75 of this chapter, those CEMS may be used to meet the requirements of this section, provided that:

(1) When relative accuracy testing is conducted, $SO_2$ concentration data and $CO_2$ (or $O_2$ ) data are collected simultaneously; and

(2) In addition to meeting the applicable $SO_2$ and $CO_2$ (or $O_2$ ) relative accuracy specifications in Figure 2 of appendix B to part 75 of this chapter, the relative accuracy (RA) standard in section 13.2 of Performance Specification 2 in appendix B to this part is met when the RA is calculated on a lb/MMBtu basis; and

(3) The reporting requirements of § 60.49b are met. $SO_2$ and $CO_2$ (or $O_2$ ) data used to meet the requirements of § 60.49b shall not include substitute data values derived from the missing data procedures in subpart D of part 75 of this chapter, nor shall the $SO_2$ data have been bias adjusted according to the procedures of part 75 of this chapter.

(b) As an alternative to operating CEMS as required under paragraph (a) of this section, an owner or operator may elect to determine the average $SO_2$ emissions and percent reduction by:

(1) Collecting coal or oil samples in an as-fired condition at the inlet to the steam generating unit and analyzing them for sulfur and heat content according to Method 19 of appendix A of this part. Method 19 of appendix A of this part provides procedures for converting these measurements into the format to be used in calculating the average $SO_2$ input rate, or

(2) Measuring $SO_2$ according to Method 6B of appendix A of this part at the inlet or outlet to the $SO_2$ control system. An initial stratification test is required to verify the adequacy of the Method 6B of appendix A of this part sampling location. The stratification test shall consist of three paired runs of a suitable $SO_2$ and $CO_2$ measurement train operated at the candidate location and a second similar train operated according to the procedures in section 3.2 and the applicable procedures in section 7 of Performance Specification 2. Method 6B of appendix A of this part, Method 6A of appendix A of this part, or a combination of Methods 6 and 3 or 3B of appendix A of this part or Methods 6C and 3A of appendix A of this part are suitable measurement techniques. If Method 6B of appendix A of this part is used for the second train, sampling time and timer operation may be adjusted for the stratification test as long as an adequate sample volume is collected; however, both sampling trains are to be operated similarly. For the location to be adequate for Method 6B of appendix A of this part 24-hour tests, the mean of the absolute difference between the three paired runs must be less than 10 percent.

(3) A daily $SO_2$ emission rate, $E_D$ , shall be determined using the procedure described in Method 6A of appendix A of this part, section 7.6.2 (Equation 6A-8) and stated in ng/J (lb/MMBtu) heat input.

(4) The mean 30-day emission rate is calculated using the daily measured values in ng/J (lb/MMBtu) for 30 successive steam generating unit operating days using equation 19-20 of Method 19 of appendix A of this part.

(c) The owner or operator of an affected facility shall obtain emission data for at least 75 percent of the operating hours in at least 22 out of 30 successive boiler operating days. If this minimum data requirement is not met with a single monitoring system, the owner or operator of the affected facility shall supplement the emission data with data collected with other monitoring systems as approved by the Administrator or the reference methods and procedures as described in paragraph (b) of this section.

(d) The 1-hour average $SO_2$ emission rates measured by the CEMS required by paragraph (a) of this section and required under § 60.13(h) is expressed in ng/J or lb/MMBtu heat input and is used to calculate the average emission rates under § 60.42(b). Each 1-hour average $SO_2$ emission rate must be based on 30 or more minutes of steam generating unit operation. The hourly averages shall be calculated according to § 60.13(h)(2). Hourly $SO_2$ emission rates are not calculated if the affected facility is operated less than 30 minutes in a given clock hour and are not counted toward determination of a steam generating unit operating day.

(e) The procedures under § 60.13 shall be followed for installation, evaluation, and operation of the CEMS.

(1) Except as provided for in paragraph (e)(4) of this section, all CEMS shall be operated in accordance with the applicable procedures under Performance Specifications 1, 2, and 3 of appendix B of this part.

(2) Except as provided for in paragraph (e)(4) of this section, quarterly accuracy determinations and daily calibration drift tests shall be performed in accordance with Procedure 1 of appendix F of this part.

(3) For affected facilities combusting coal or oil, alone or in combination with other fuels, the span value of the $SO_2$ CEMS at the inlet to the $SO_2$ control device is 125 percent of the maximum estimated hourly potential $SO_2$ emissions of the fuel combusted, and the span value of the CEMS at the outlet to the $SO_2$ control device is 50 percent of the maximum estimated hourly potential $SO_2$ emissions of the fuel combusted. Alternatively, $SO_2$ span values determined according to section 2.1.1 in appendix A to part 75 of this chapter may be used.

(4) As an alternative to meeting the requirements of requirements of paragraphs (e)(1) and (e)(2) of this section, the owner or operator may elect to implement the following alternative data accuracy assessment procedures:

(i) For all required $CO_2$ and $O_2$ monitors and for $SO_2$ and $NO_X$ monitors with span values greater than or equal to 100 ppm, the daily calibration error test and calibration adjustment procedures described in sections 2.1.1 and 2.1.3 of appendix B to part 75 of this chapter may be followed instead of the CD assessment procedures in Procedure 1, section 4.1 of appendix F to this part.

(ii) For all required $CO_2$ and $O_2$ monitors and for $SO_2$ and $NO_X$ monitors with span values greater than 30 ppm, quarterly linearity checks may be performed in accordance with section 2.2.1 of appendix B to part 75 of this chapter, instead of performing the cylinder gas audits (CGAs) described in Procedure 1, section 5.1.2 of appendix F to this part. If this option is selected: The frequency of the linearity checks shall be as specified in section 2.2.1 of appendix B to part 75 of this chapter; the applicable linearity specifications in section 3.2 of appendix A to part 75 of this chapter shall be met; the data validation and out-of-control criteria in section 2.2.3 of appendix B to part 75 of this chapter shall be followed instead of the excessive audit inaccuracy and out-of-control criteria in Procedure 1, section 5.2 of appendix F to this part; and the grace period provisions in section 2.2.4 of appendix B to part 75 of this chapter shall apply. For the purposes of data validation under this subpart, the cylinder gas audits described in Procedure 1, section 5.1.2 of appendix F to this part shall be performed for $SO_2$ and $NO_X$ span values less than or equal to 30 ppm; and

(iii) For $SO_2$ , $CO_2$ , and $O_2$ monitoring systems and for $NO_X$ emission rate monitoring systems, RATAs may be performed in accordance with section 2.3 of appendix B to part 75 of this chapter instead of following the procedures described in Procedure 1, section 5.1.1 of appendix F to this part. If this option is selected: The frequency of each RATA shall be as specified in section 2.3.1 of appendix B to part 75 of this chapter; the applicable relative accuracy specifications shown in Figure 2 in appendix B to part 75 of this chapter shall be met; the data validation and out-of-control criteria in section 2.3.2 of appendix B to part 75 of this chapter shall be followed instead of the excessive audit inaccuracy and out-of-control criteria in Procedure 1, section 5.2 of appendix F to this part; and the grace period provisions in section 2.3.3 of appendix B to part 75 of this chapter shall apply. For the purposes of data validation under this subpart, the relative accuracy specification in section 13.2 of Performance Specification 2 in appendix B to this part shall be met on a lb/MMBtu basis for $SO_2$ (regardless of the $SO_2$ emission level during the RATA), and for $NO_X$ when the average $NO_X$ emission rate measured by the reference method during the RATA is less than 0.100 lb/MMBtu.

(f) The owner or operator of an affected facility that combusts very low sulfur oil or is demonstrating compliance under § 60.45b(k) is not subject to the emission monitoring requirements under paragraph (a) of this section if the owner or operator maintains fuel records as described in § 60.49b(r).

[72 FR 32742, June 13, 2007, as amended at 74 FR 5087, Jan. 28, 2009]

**§ 60.48b Emission monitoring for particulate matter and nitrogen oxides.**

(a) Except as provided in paragraph (j) of this section, the owner or operator of an affected facility subject to the opacity standard under § 60.43b shall install, calibrate, maintain, and operate a continuous opacity monitoring systems (COMS) for measuring the opacity of emissions discharged to the atmosphere and record the output of the system. The owner or operator of an affected facility subject to an opacity standard under § 60.43b and meeting the conditions under paragraphs (j)(1), (2), (3), (4), (5), or (6) of this section who elects not to use a COMS shall conduct a performance test using Method 9 of appendix A-4 of this part and the procedures in § 60.11 to demonstrate compliance with the applicable limit in § 60.43b by April 29, 2011, within 45 days of stopping use of an existing COMS, or within 180 days after initial startup of the facility, whichever is later, and shall comply with either paragraphs (a)(1), (a)(2), or (a)(3) of this section. The observation period for Method 9 of appendix A-4 of this part

performance tests may be reduced from 3 hours to 60 minutes if all 6-minute averages are less than 10 percent and all individual 15-second observations are less than or equal to 20 percent during the initial 60 minutes of observation.

(1) Except as provided in paragraph (a)(2) and (a)(3) of this section, the owner or operator shall conduct subsequent Method 9 of appendix A-4 of this part performance tests using the procedures in paragraph (a) of this section according to the applicable schedule in paragraphs (a)(1)(i) through (a)(1)(iv) of this section, as determined by the most recent Method 9 of appendix A-4 of this part performance test results.

(i) If no visible emissions are observed, a subsequent Method 9 of appendix A-4 of this part performance test must be completed within 12 calendar months from the date that the most recent performance test was conducted or within 45 days of the next day that fuel with an opacity standard is combusted, whichever is later;

(ii) If visible emissions are observed but the maximum 6-minute average opacity is less than or equal to 5 percent, a subsequent Method 9 of appendix A-4 of this part performance test must be completed within 6 calendar months from the date that the most recent performance test was conducted or within 45 days of the next day that fuel with an opacity standard is combusted, whichever is later;

(iii) If the maximum 6-minute average opacity is greater than 5 percent but less than or equal to 10 percent, a subsequent Method 9 of appendix A-4 of this part performance test must be completed within 3 calendar months from the date that the most recent performance test was conducted or within 45 days of the next day that fuel with an opacity standard is combusted, whichever is later; or

(iv) If the maximum 6-minute average opacity is greater than 10 percent, a subsequent Method 9 of appendix A-4 of this part performance test must be completed within 45 calendar days from the date that the most recent performance test was conducted.

(2) If the maximum 6-minute opacity is less than 10 percent during the most recent Method 9 of appendix A-4 of this part performance test, the owner or operator may, as an alternative to performing subsequent Method 9 of appendix A-4 of this part performance tests, elect to perform subsequent monitoring using Method 22 of appendix A-7 of this part according to the procedures specified in paragraphs (a)(2)(i) and (ii) of this section.

(i) The owner or operator shall conduct 10 minute observations (during normal operation) each operating day the affected facility fires fuel for which an opacity standard is applicable using Method 22 of appendix A-7 of this part and demonstrate that the sum of the occurrences of any visible emissions is not in excess of 5 percent of the observation period ( *i.e.* , 30 seconds per 10 minute period). If the sum of the occurrence of any visible emissions is greater than 30 seconds during the initial 10 minute observation, immediately conduct a 30 minute observation. If the sum of the occurrence of visible emissions is greater than 5 percent of the observation period ( *i.e.,* 90 seconds per 30 minute period), the owner or operator shall either document and adjust the operation of the facility and demonstrate within 24 hours that the sum of the occurrence of visible emissions is equal to or less than 5 percent during a 30 minute observation ( *i.e.,* 90 seconds) or conduct a new Method 9 of appendix A-4 of this part performance test using the procedures in paragraph (a) of this section within 45 calendar days according to the requirements in § 60.46d(d)(7).

(ii) If no visible emissions are observed for 10 operating days during which an opacity standard is applicable, observations can be reduced to once every 7 operating days during which an opacity standard is applicable. If any visible emissions are observed, daily observations shall be resumed.

(3) If the maximum 6-minute opacity is less than 10 percent during the most recent Method 9 of appendix A-4 of this part performance test, the owner or operator may, as an alternative to performing subsequent Method 9 of appendix A-4 performance tests, elect to perform subsequent monitoring using a digital opacity compliance system according to a site-specific monitoring plan approved by the Administrator. The observations shall be similar, but not necessarily identical, to the requirements in paragraph (a)(2) of this section. For reference purposes in preparing the monitoring plan, see OAQPS “Determination of Visible Emission Opacity from Stationary Sources Using Computer-Based Photographic Analysis Systems.” This document is available from the U.S. Environmental Protection Agency (U.S. EPA); Office of Air Quality and Planning Standards; Sector Policies and Programs Division; Measurement Policy Group (D243-02), Research Triangle Park, NC 27711. This document is also available on the Technology Transfer Network (TTN) under Emission Measurement Center Preliminary Methods.

(b) Except as provided under paragraphs (g), (h), and (i) of this section, the owner or operator of an affected facility subject to a $NO_X$ standard under § 60.44b shall comply with either paragraphs (b)(1) or (b)(2) of this section.

(1) Install, calibrate, maintain, and operate CEMS for measuring $NO_X$ and $O_2$ (or $CO_2$ ) emissions discharged to the atmosphere, and shall record the output of the system; or

(2) If the owner or operator has installed a $NO_X$ emission rate CEMS to meet the requirements of part 75 of this chapter and is continuing to meet the ongoing requirements of part 75 of this chapter, that CEMS may be used to meet the requirements of this section, except that the owner or operator shall also meet the requirements of § 60.49b. Data reported to meet the requirements of § 60.49b shall not include data substituted using the missing data procedures in subpart D of part 75 of this chapter, nor shall the data have been bias adjusted according to the procedures of part 75 of this chapter.

(c) The CEMS required under paragraph (b) of this section shall be operated and data recorded during all periods of operation of the affected facility except for CEMS breakdowns and repairs. Data is recorded during calibration checks, and zero and span adjustments.

(d) The 1-hour average $NO_X$ emission rates measured by the continuous $NO_X$ monitor required by paragraph (b) of this section and required under § 60.13(h) shall be expressed in ng/J or lb/MMBtu heat input and shall be used to calculate the average emission rates under § 60.44b. The 1-hour averages shall be calculated using the data points required under § 60.13(h)(2).

(e) The procedures under § 60.13 shall be followed for installation, evaluation, and operation of the continuous monitoring systems.

(1) For affected facilities combusting coal, wood or municipal-type solid waste, the span value for a COMS shall be between 60 and 80 percent.

(2) For affected facilities combusting coal, oil, or natural gas, the span value for $NO_X$ is determined using one of the following procedures:

(i) Except as provided under paragraph (e)(2)(ii) of this section, $NO_X$ span values shall be determined as follows:

| **Fuel** | **Span values for $NO_X$ (ppm)** |
|---|---|
| Natural gas | 500. |
| Oil | 500. |
| Coal | 1,000. |
| Mixtures | 500 (x + y) + 1,000z. |

Where:

x = Fraction of total heat input derived from natural gas;

y = Fraction of total heat input derived from oil; and

z = Fraction of total heat input derived from coal.

(ii) As an alternative to meeting the requirements of paragraph (e)(2)(i) of this section, the owner or operator of an affected facility may elect to use the $NO_X$ span values determined according to section 2.1.2 in appendix A to part 75 of this chapter.

(3) All span values computed under paragraph (e)(2)(i) of this section for combusting mixtures of regulated fuels are rounded to the nearest 500 ppm. Span values computed under paragraph (e)(2)(ii) of this section shall be rounded off according to section 2.1.2 in appendix A to part 75 of this chapter.

(f) When $NO_X$ emission data are not obtained because of CEMS breakdowns, repairs, calibration checks and zero and span adjustments, emission data will be obtained by using standby monitoring systems, Method 7 of appendix A

of this part, Method 7A of appendix A of this part, or other approved reference methods to provide emission data for a minimum of 75 percent of the operating hours in each steam generating unit operating day, in at least 22 out of 30 successive steam generating unit operating days.

(g) The owner or operator of an affected facility that has a heat input capacity of 73 MW (250 MMBtu/hr) or less, and that has an annual capacity factor for residual oil having a nitrogen content of 0.30 weight percent or less, natural gas, distillate oil, gasified coal, or any mixture of these fuels, greater than 10 percent (0.10) shall:

(1) Comply with the provisions of paragraphs (b), (c), (d), (e)(2), (e)(3), and (f) of this section; or

(2) Monitor steam generating unit operating conditions and predict $NO_X$ emission rates as specified in a plan submitted pursuant to § 60.49b(c).

(h) The owner or operator of a duct burner, as described in § 60.41b, that is subject to the $NO_X$ standards in § 60.44b(a)(4), § 60.44b(e), or § 60.44b(l) is not required to install or operate a continuous emissions monitoring system to measure $NO_X$ emissions.

(i) The owner or operator of an affected facility described in § 60.44b(j) or § 60.44b(k) is not required to install or operate a CEMS for measuring $NO_X$ emissions.

(j) The owner or operator of an affected facility that meets the conditions in either paragraph (j)(1), (2), (3), (4), (5), (6), or (7) of this section is not required to install or operate a COMS if:

(1) The affected facility uses a PM CEMS to monitor PM emissions; or

(2) The affected facility burns only liquid (excluding residual oil) or gaseous fuels with potential $SO_2$ emissions rates of 26 ng/J (0.060 lb/MMBtu) or less and does not use a post-combustion technology to reduce $SO_2$ or PM emissions. The owner or operator must maintain fuel records of the sulfur content of the fuels burned, as described under § 60.49b(r); or

(3) The affected facility burns coke oven gas alone or in combination with fuels meeting the criteria in paragraph (j)(2) of this section and does not use a post-combustion technology to reduce $SO_2$ or PM emissions; or

(4) The affected facility does not use post-combustion technology (except a wet scrubber) for reducing PM, $SO_2$ , or carbon monoxide (CO) emissions, burns only gaseous fuels or fuel oils that contain less than or equal to 0.30 weight percent sulfur, and is operated such that emissions of CO to the atmosphere from the affected facility are maintained at levels less than or equal to 0.15 lb/MMBtu on a steam generating unit operating day average basis. Owners and operators of affected facilities electing to comply with this paragraph must demonstrate compliance according to the procedures specified in paragraphs (j)(4)(i) through (iv) of this section; or

(i) You must monitor CO emissions using a CEMS according to the procedures specified in paragraphs (j)(4)(i)(A) through (D) of this section.

(A) The CO CEMS must be installed, certified, maintained, and operated according to the provisions in § 60.58b(i)(3) of subpart Eb of this part.

(B) Each 1-hour CO emissions average is calculated using the data points generated by the CO CEMS expressed in parts per million by volume corrected to 3 percent oxygen (dry basis).

(C) At a minimum, valid 1-hour CO emissions averages must be obtained for at least 90 percent of the operating hours on a 30-day rolling average basis. The 1-hour averages are calculated using the data points required in § 60.13(h)(2).

(D) Quarterly accuracy determinations and daily calibration drift tests for the CO CEMS must be performed in accordance with procedure 1 in appendix F of this part.

(ii) You must calculate the 1-hour average CO emissions levels for each steam generating unit operating day by multiplying the average hourly CO output concentration measured by the CO CEMS times the corresponding average hourly flue gas flow rate and divided by the corresponding average hourly heat input to the affected source. The 24-hour average CO emission level is determined by calculating the arithmetic average of the hourly CO emission levels computed for each steam generating unit operating day.

(iii) You must evaluate the preceding 24-hour average CO emission level each steam generating unit operating day excluding periods of affected source startup, shutdown, or malfunction. If the 24-hour average CO emission level is greater than 0.15 lb/MMBtu, you must initiate investigation of the relevant equipment and control systems within 24 hours of the first discovery of the high emission incident and, take the appropriate corrective action as soon as practicable to adjust control settings or repair equipment to reduce the 24-hour average CO emission level to 0.15 lb/MMBtu or less.

(iv) You must record the CO measurements and calculations performed according to paragraph (j)(4) of this section and any corrective actions taken. The record of corrective action taken must include the date and time during which the 24-hour average CO emission level was greater than 0.15 lb/MMBtu, and the date, time, and description of the corrective action.

(5) The affected facility uses a bag leak detection system to monitor the performance of a fabric filter (baghouse) according to the most current requirements in section § 60.48Da of this part; or

(6) The affected facility uses an ESP as the primary PM control device and uses an ESP predictive model to monitor the performance of the ESP developed in accordance and operated according to the most current requirements in section § 60.48Da of this part; or

(7) The affected facility burns only gaseous fuels or fuel oils that contain less than or equal to 0.30 weight percent sulfur and operates according to a written site-specific monitoring plan approved by the permitting authority. This monitoring plan must include procedures and criteria for establishing and monitoring specific parameters for the affected facility indicative of compliance with the opacity standard.

(k) Owners or operators complying with the PM emission limit by using a PM CEMS must calibrate, maintain, operate, and record the output of the system for PM emissions discharged to the atmosphere as specified in § 60.46b(j). The CEMS specified in paragraph § 60.46b(j) shall be operated and data recorded during all periods of operation of the affected facility except for CEMS breakdowns and repairs. Data is recorded during calibration checks, and zero and span adjustments.

(l) An owner or operator of an affected facility that is subject to an opacity standard under § 60.43b(f) is not required to operate a COMS provided that the unit burns only gaseous fuels and/or liquid fuels (excluding residue oil) with a potential $SO_2$ emissions rate no greater than 26 ng/J (0.060 lb/MMBtu), and the unit operates according to a written site-specific monitoring plan approved by the permitting authority is not required to operate a COMS. This monitoring plan must include procedures and criteria for establishing and monitoring specific parameters for the affected facility indicative of compliance with the opacity standard. For testing performed as part of this site-specific monitoring plan, the permitting authority may require as an alternative to the notification and reporting requirements specified in §§ 60.8 and 60.11 that the owner or operator submit any deviations with the excess emissions report required under § 60.49b(h).

[72 FR 32742, June 13, 2007, as amended at 74 FR 5087, Jan. 28, 2009; 76 FR 3523, Jan. 20, 2011; 77 FR 9460, Feb. 16, 2012]

**§ 60.49b Reporting and recordkeeping requirements.**

(a) The owner or operator of each affected facility shall submit notification of the date of initial startup, as provided by § 60.7. This notification shall include:

(1) The design heat input capacity of the affected facility and identification of the fuels to be combusted in the affected facility;

(2) If applicable, a copy of any federally enforceable requirement that limits the annual capacity factor for any fuel or mixture of fuels under §§ 60.42b(d)(1), 60.43b(a)(2), (a)(3)(iii), (c)(2)(ii), (d)(2)(iii), 60.44b(c), (d), (e), (i), (j), (k), 60.45b(d), (g), 60.46b(h), or 60.48b(i);

(3) The annual capacity factor at which the owner or operator anticipates operating the facility based on all fuels fired and based on each individual fuel fired; and

(4) Notification that an emerging technology will be used for controlling emissions of $SO_2$ . The Administrator will examine the description of the emerging technology and will determine whether the technology qualifies as an emerging technology. In making this determination, the Administrator may require the owner or operator of the affected facility to submit additional information concerning the control device. The affected facility is subject to the provisions of § 60.42b(a) unless and until this determination is made by the Administrator.

(b) The owner or operator of each affected facility subject to the $SO_2$ , PM, and/or $NO_X$ emission limits under §§ 60.42b, 60.43b, and 60.44b shall submit to the Administrator the performance test data from the initial performance test and the performance evaluation of the CEMS using the applicable performance specifications in appendix B of this part. The owner or operator of each affected facility described in § 60.44b(j) or § 60.44b(k) shall submit to the Administrator the maximum heat input capacity data from the demonstration of the maximum heat input capacity of the affected facility.

(c) The owner or operator of each affected facility subject to the $NO_X$ standard in § 60.44b who seeks to demonstrate compliance with those standards through the monitoring of steam generating unit operating conditions in the provisions of § 60.48b(g)(2) shall submit to the Administrator for approval a plan that identifies the operating conditions to be monitored in § 60.48b(g)(2) and the records to be maintained in § 60.49b(g). This plan shall be submitted to the Administrator for approval within 360 days of the initial startup of the affected facility. An affected facility burning coke oven gas alone or in combination with other gaseous fuels or distillate oil shall submit this plan to the Administrator for approval within 360 days of the initial startup of the affected facility or by November 30, 2009, whichever date comes later. If the plan is approved, the owner or operator shall maintain records of predicted nitrogen oxide emission rates and the monitored operating conditions, including steam generating unit load, identified in the plan. The plan shall:

(1) Identify the specific operating conditions to be monitored and the relationship between these operating conditions and $NO_X$ emission rates ( *i.e.* , ng/J or lbs/MMBtu heat input). Steam generating unit operating conditions include, but are not limited to, the degree of staged combustion ( *i.e.* , the ratio of primary air to secondary and/or tertiary air) and the level of excess air ( *i.e.* , flue gas $O_2$ level);

(2) Include the data and information that the owner or operator used to identify the relationship between $NO_X$ emission rates and these operating conditions; and

(3) Identify how these operating conditions, including steam generating unit load, will be monitored under § 60.48b(g) on an hourly basis by the owner or operator during the period of operation of the affected facility; the quality assurance procedures or practices that will be employed to ensure that the data generated by monitoring these operating conditions will be representative and accurate; and the type and format of the records of these operating conditions, including steam generating unit load, that will be maintained by the owner or operator under § 60.49b(g).

(d) Except as provided in paragraph (d)(2) of this section, the owner or operator of an affected facility shall record and maintain records as specified in paragraph (d)(1) of this section.

(1) The owner or operator of an affected facility shall record and maintain records of the amounts of each fuel combusted during each day and calculate the annual capacity factor individually for coal, distillate oil, residual oil, natural gas, wood, and municipal-type solid waste for the reporting period. The annual capacity factor is determined on a 12-month rolling average basis with a new annual capacity factor calculated at the end of each calendar month.

(2) As an alternative to meeting the requirements of paragraph (d)(1) of this section, the owner or operator of an affected facility that is subject to a federally enforceable permit restricting fuel use to a single fuel such that the facility is not required to continuously monitor any emissions (excluding opacity) or parameters indicative of emissions may elect to record and maintain records of the amount of each fuel combusted during each calendar month.

(e) For an affected facility that combusts residual oil and meets the criteria under §§ 60.46b(e)(4), 60.44b(j), or (k), the owner or operator shall maintain records of the nitrogen content of the residual oil combusted in the affected facility and calculate the average fuel nitrogen content for the reporting period. The nitrogen content shall be determined using ASTM Method D4629 (incorporated by reference, see § 60.17), or fuel suppliers. If residual oil blends are being combusted, fuel nitrogen specifications may be prorated based on the ratio of residual oils of different nitrogen content in the fuel blend.

(f) For an affected facility subject to the opacity standard in § 60.43b, the owner or operator shall maintain records of opacity. In addition, an owner or operator that elects to monitor emissions according to the requirements in § 60.48b(a) shall maintain records according to the requirements specified in paragraphs (f)(1) through (3) of this section, as applicable to the visible emissions monitoring method used.

(1) For each performance test conducted using Method 9 of appendix A-4 of this part, the owner or operator shall keep the records including the information specified in paragraphs (f)(1)(i) through (iii) of this section.

(i) Dates and time intervals of all opacity observation periods;

(ii) Name, affiliation, and copy of current visible emission reading certification for each visible emission observer participating in the performance test; and

(iii) Copies of all visible emission observer opacity field data sheets;

(2) For each performance test conducted using Method 22 of appendix A-4 of this part, the owner or operator shall keep the records including the information specified in paragraphs (f)(2)(i) through (iv) of this section.

(i) Dates and time intervals of all visible emissions observation periods;

(ii) Name and affiliation for each visible emission observer participating in the performance test;

(iii) Copies of all visible emission observer opacity field data sheets; and

(iv) Documentation of any adjustments made and the time the adjustments were completed to the affected facility operation by the owner or operator to demonstrate compliance with the applicable monitoring requirements.

(3) For each digital opacity compliance system, the owner or operator shall maintain records and submit reports according to the requirements specified in the site-specific monitoring plan approved by the Administrator.

(g) Except as provided under paragraph (p) of this section, the owner or operator of an affected facility subject to the $NO_X$ standards under § 60.44b shall maintain records of the following information for each steam generating unit operating day:

(1) Calendar date;

(2) The average hourly $NO_X$ emission rates (expressed as $NO_2$ ) (ng/J or lb/MMBtu heat input) measured or predicted;

(3) The 30-day average $NO_X$ emission rates (ng/J or lb/MMBtu heat input) calculated at the end of each steam generating unit operating day from the measured or predicted hourly nitrogen oxide emission rates for the preceding 30 steam generating unit operating days;

(4) Identification of the steam generating unit operating days when the calculated 30-day average $NO_X$ emission rates are in excess of the $NO_X$ emissions standards under § 60.44b, with the reasons for such excess emissions as well as a description of corrective actions taken;

(5) Identification of the steam generating unit operating days for which pollutant data have not been obtained, including reasons for not obtaining sufficient data and a description of corrective actions taken;

(6) Identification of the times when emission data have been excluded from the calculation of average emission rates and the reasons for excluding data;

(7) Identification of “F” factor used for calculations, method of determination, and type of fuel combusted;

(8) Identification of the times when the pollutant concentration exceeded full span of the CEMS;

(9) Description of any modifications to the CEMS that could affect the ability of the CEMS to comply with Performance Specification 2 or 3; and

(10) Results of daily CEMS drift tests and quarterly accuracy assessments as required under appendix F, Procedure 1 of this part.

(h) The owner or operator of any affected facility in any category listed in paragraphs (h)(1) or (2) of this section is required to submit excess emission reports for any excess emissions that occurred during the reporting period.

(1) Any affected facility subject to the opacity standards in § 60.43b(f) or to the operating parameter monitoring requirements in § 60.13(i)(1).

(2) Any affected facility that is subject to the $NO_X$ standard of § 60.44b, and that:

(i) Combusts natural gas, distillate oil, gasified coal, or residual oil with a nitrogen content of 0.3 weight percent or less; or

(ii) Has a heat input capacity of 73 MW (250 MMBtu/hr) or less and is required to monitor $NO_X$ emissions on a continuous basis under § 60.48b(g)(1) or steam generating unit operating conditions under § 60.48b(g)(2).

(3) For the purpose of § 60.43b, excess emissions are defined as all 6-minute periods during which the average opacity exceeds the opacity standards under § 60.43b(f).

(4) For purposes of § 60.48b(g)(1), excess emissions are defined as any calculated 30-day rolling average $NO_X$ emission rate, as determined under § 60.46b(e), that exceeds the applicable emission limits in § 60.44b.

(i) The owner or operator of any affected facility subject to the continuous monitoring requirements for $NO_X$ under § 60.48(b) shall submit reports containing the information recorded under paragraph (g) of this section.

(j) The owner or operator of any affected facility subject to the $SO_2$ standards under § 60.42b shall submit reports.

(k) For each affected facility subject to the compliance and performance testing requirements of § 60.45b and the reporting requirement in paragraph (j) of this section, the following information shall be reported to the Administrator:

(1) Calendar dates covered in the reporting period;

(2) Each 30-day average $SO_2$ emission rate (ng/J or lb/MMBtu heat input) measured during the reporting period, ending with the last 30-day period; reasons for noncompliance with the emission standards; and a description of corrective actions taken; For an exceedance due to maintenance of the $SO_2$ control system covered in paragraph 60.45b(a), the report shall identify the days on which the maintenance was performed and a description of the maintenance;

(3) Each 30-day average percent reduction in $SO_2$ emissions calculated during the reporting period, ending with the last 30-day period; reasons for noncompliance with the emission standards; and a description of corrective actions taken;

(4) Identification of the steam generating unit operating days that coal or oil was combusted and for which $SO_2$ or diluent ($O_2$ or $CO_2$ ) data have not been obtained by an approved method for at least 75 percent of the operating

hours in the steam generating unit operating day; justification for not obtaining sufficient data; and description of corrective action taken;

(5) Identification of the times when emissions data have been excluded from the calculation of average emission rates; justification for excluding data; and description of corrective action taken if data have been excluded for periods other than those during which coal or oil were not combusted in the steam generating unit;

(6) Identification of “F” factor used for calculations, method of determination, and type of fuel combusted;

(7) Identification of times when hourly averages have been obtained based on manual sampling methods;

(8) Identification of the times when the pollutant concentration exceeded full span of the CEMS;

(9) Description of any modifications to the CEMS that could affect the ability of the CEMS to comply with Performance Specification 2 or 3;

(10) Results of daily CEMS drift tests and quarterly accuracy assessments as required under appendix F, Procedure 1 of this part; and

(11) The annual capacity factor of each fired as provided under paragraph (d) of this section.

(l) For each affected facility subject to the compliance and performance testing requirements of § 60.45b(d) and the reporting requirements of paragraph (j) of this section, the following information shall be reported to the Administrator:

(1) Calendar dates when the facility was in operation during the reporting period;

(2) The 24-hour average $SO_2$ emission rate measured for each steam generating unit operating day during the reporting period that coal or oil was combusted, ending in the last 24-hour period in the quarter; reasons for noncompliance with the emission standards; and a description of corrective actions taken;

(3) Identification of the steam generating unit operating days that coal or oil was combusted for which $S0_2$ or diluent ($O_2$ or $CO_2$ ) data have not been obtained by an approved method for at least 75 percent of the operating hours; justification for not obtaining sufficient data; and description of corrective action taken;

(4) Identification of the times when emissions data have been excluded from the calculation of average emission rates; justification for excluding data; and description of corrective action taken if data have been excluded for periods other than those during which coal or oil were not combusted in the steam generating unit;

(5) Identification of “F” factor used for calculations, method of determination, and type of fuel combusted;

(6) Identification of times when hourly averages have been obtained based on manual sampling methods;

(7) Identification of the times when the pollutant concentration exceeded full span of the CEMS;

(8) Description of any modifications to the CEMS that could affect the ability of the CEMS to comply with Performance Specification 2 or 3; and

(9) Results of daily CEMS drift tests and quarterly accuracy assessments as required under Procedure 1 of appendix F 1 of this part. If the owner or operator elects to implement the alternative data assessment procedures described in §§ 60.47b(e)(4)(i) through (e)(4)(iii), each data assessment report shall include a summary of the results of all of the RATAs, linearity checks, CGAs, and calibration error or drift assessments required by §§ 60.47b(e)(4)(i) through (e)(4)(iii).

(m) For each affected facility subject to the $SO_2$ standards in § 60.42(b) for which the minimum amount of data required in § 60.47b(c) were not obtained during the reporting period, the following information is reported to the Administrator in addition to that required under paragraph (k) of this section:

(1) The number of hourly averages available for outlet emission rates and inlet emission rates;

(2) The standard deviation of hourly averages for outlet emission rates and inlet emission rates, as determined in Method 19 of appendix A of this part, section 7;

(3) The lower confidence limit for the mean outlet emission rate and the upper confidence limit for the mean inlet emission rate, as calculated in Method 19 of appendix A of this part, section 7; and

(4) The ratio of the lower confidence limit for the mean outlet emission rate and the allowable emission rate, as determined in Method 19 of appendix A of this part, section 7.

(n) If a percent removal efficiency by fuel pretreatment ( *i.e.* , $\%R_f$ ) is used to determine the overall percent reduction ( *i.e.* , $\%R_o$ ) under § 60.45b, the owner or operator of the affected facility shall submit a signed statement with the report.

(1) Indicating what removal efficiency by fuel pretreatment ( *i.e.* , $\%R_f$ ) was credited during the reporting period;

(2) Listing the quantity, heat content, and date each pre-treated fuel shipment was received during the reporting period, the name and location of the fuel pretreatment facility; and the total quantity and total heat content of all fuels received at the affected facility during the reporting period;

(3) Documenting the transport of the fuel from the fuel pretreatment facility to the steam generating unit; and

(4) Including a signed statement from the owner or operator of the fuel pretreatment facility certifying that the percent removal efficiency achieved by fuel pretreatment was determined in accordance with the provisions of Method 19 of appendix A of this part and listing the heat content and sulfur content of each fuel before and after fuel pretreatment.

(o) All records required under this section shall be maintained by the owner or operator of the affected facility for a period of 2 years following the date of such record.

(p) The owner or operator of an affected facility described in § 60.44b(j) or (k) shall maintain records of the following information for each steam generating unit operating day:

(1) Calendar date;

(2) The number of hours of operation; and

(3) A record of the hourly steam load.

(q) The owner or operator of an affected facility described in § 60.44b(j) or § 60.44b(k) shall submit to the Administrator a report containing:

(1) The annual capacity factor over the previous 12 months;

(2) The average fuel nitrogen content during the reporting period, if residual oil was fired; and

(3) If the affected facility meets the criteria described in § 60.44b(j), the results of any $NO_X$ emission tests required during the reporting period, the hours of operation during the reporting period, and the hours of operation since the last $NO_X$ emission test.

(r) The owner or operator of an affected facility who elects to use the fuel based compliance alternatives in § 60.42b or § 60.43b shall either:

(1) The owner or operator of an affected facility who elects to demonstrate that the affected facility combusts only very low sulfur oil, natural gas, wood, a mixture of these fuels, or any of these fuels (or a mixture of these fuels) in

combination with other fuels that are known to contain an insignificant amount of sulfur in § 60.42b(j) or § 60.42b(k) shall obtain and maintain at the affected facility fuel receipts (such as a current, valid purchase contract, tariff sheet, or transportation contract) from the fuel supplier that certify that the oil meets the definition of distillate oil and gaseous fuel meets the definition of natural gas as defined in § 60.41b and the applicable sulfur limit. For the purposes of this section, the distillate oil need not meet the fuel nitrogen content specification in the definition of distillate oil. Reports shall be submitted to the Administrator certifying that only very low sulfur oil meeting this definition, natural gas, wood, and/or other fuels that are known to contain insignificant amounts of sulfur were combusted in the affected facility during the reporting period; or

(2) The owner or operator of an affected facility who elects to demonstrate compliance based on fuel analysis in § 60.42b or § 60.43b shall develop and submit a site-specific fuel analysis plan to the Administrator for review and approval no later than 60 days before the date you intend to demonstrate compliance. Each fuel analysis plan shall include a minimum initial requirement of weekly testing and each analysis report shall contain, at a minimum, the following information:

(i) The potential sulfur emissions rate of the representative fuel mixture in ng/J heat input;

(ii) The method used to determine the potential sulfur emissions rate of each constituent of the mixture. For distillate oil and natural gas a fuel receipt or tariff sheet is acceptable;

(iii) The ratio of different fuels in the mixture; and

(iv) The owner or operator can petition the Administrator to approve monthly or quarterly sampling in place of weekly sampling.

(s) Facility specific $NO_X$ standard for Cytec Industries Fortier Plant's C.AOG incinerator located in Westwego, Louisiana:

(1) *Definitions* .

*Oxidation zone* is defined as the portion of the C.AOG incinerator that extends from the inlet of the oxidizing zone combustion air to the outlet gas stack.

*Reducing zone* is defined as the portion of the C.AOG incinerator that extends from the burner section to the inlet of the oxidizing zone combustion air.

*Total inlet air* is defined as the total amount of air introduced into the C.AOG incinerator for combustion of natural gas and chemical by-product waste and is equal to the sum of the air flow into the reducing zone and the air flow into the oxidation zone.

(2) *Standard for nitrogen oxides* . (i) When fossil fuel alone is combusted, the $NO_X$ emission limit for fossil fuel in § 60.44b(a) applies.

(ii) When natural gas and chemical by-product waste are simultaneously combusted, the $NO_X$ emission limit is 289 ng/J (0.67 lb/MMBtu) and a maximum of 81 percent of the total inlet air provided for combustion shall be provided to the reducing zone of the C.AOG incinerator.

(3) *Emission monitoring* . (i) The percent of total inlet air provided to the reducing zone shall be determined at least every 15 minutes by measuring the air flow of all the air entering the reducing zone and the air flow of all the air entering the oxidation zone, and compliance with the percentage of total inlet air that is provided to the reducing zone shall be determined on a 3-hour average basis.

(ii) The $NO_X$ emission limit shall be determined by the compliance and performance test methods and procedures for $NO_X$ in § 60.46b(i).

(iii) The monitoring of the $NO_X$ emission limit shall be performed in accordance with § 60.48b.

(4) *Reporting and recordkeeping requirements* . (i) The owner or operator of the C.AOG incinerator shall submit a report on any excursions from the limits required by paragraph (a)(2) of this section to the Administrator with the quarterly report required by paragraph (i) of this section.

(ii) The owner or operator of the C.AOG incinerator shall keep records of the monitoring required by paragraph (a)(3) of this section for a period of 2 years following the date of such record.

(iii) The owner of operator of the C.AOG incinerator shall perform all the applicable reporting and recordkeeping requirements of this section.

(t) Facility-specific $NO_X$ standard for Rohm and Haas Kentucky Incorporated's Boiler No. 100 located in Louisville, Kentucky:

(1) *Definitions* .

*Air ratio control damper* is defined as the part of the low $NO_X$ burner that is adjusted to control the split of total combustion air delivered to the reducing and oxidation portions of the combustion flame.

*Flue gas recirculation line* is defined as the part of Boiler No. 100 that recirculates a portion of the boiler flue gas back into the combustion air.

(2) *Standard for nitrogen oxides* . (i) When fossil fuel alone is combusted, the $NO_X$ emission limit for fossil fuel in § 60.44b(a) applies.

(ii) When fossil fuel and chemical by-product waste are simultaneously combusted, the $NO_X$ emission limit is 473 ng/J (1.1 lb/MMBtu), and the air ratio control damper tee handle shall be at a minimum of 5 inches (12.7 centimeters) out of the boiler, and the flue gas recirculation line shall be operated at a minimum of 10 percent open as indicated by its valve opening position indicator.

(3) *Emission monitoring for nitrogen oxides* . (i) The air ratio control damper tee handle setting and the flue gas recirculation line valve opening position indicator setting shall be recorded during each 8-hour operating shift.

(ii) The $NO_X$ emission limit shall be determined by the compliance and performance test methods and procedures for $NO_X$ in § 60.46b.

(iii) The monitoring of the $NO_X$ emission limit shall be performed in accordance with § 60.48b.

(4) *Reporting and recordkeeping requirements* . (i) The owner or operator of Boiler No. 100 shall submit a report on any excursions from the limits required by paragraph (b)(2) of this section to the Administrator with the quarterly report required by § 60.49b(i).

(ii) The owner or operator of Boiler No. 100 shall keep records of the monitoring required by paragraph (b)(3) of this section for a period of 2 years following the date of such record.

(iii) The owner of operator of Boiler No. 100 shall perform all the applicable reporting and recordkeeping requirements of § 60.49b.

(u) *Site-specific standard for Merck & Co., Inc.'s Stonewall Plant in Elkton, Virginia* . (1) This paragraph (u) applies only to the pharmaceutical manufacturing facility, commonly referred to as the Stonewall Plant, located at Route 340 South, in Elkton, Virginia (“site”) and only to the natural gas-fired boilers installed as part of the powerhouse conversion required pursuant to 40 CFR 52.2454(g). The requirements of this paragraph shall apply, and the requirements of §§ 60.40b through 60.49b(t) shall not apply, to the natural gas-fired boilers installed pursuant to 40 CFR 52.2454(g).

(i) The site shall equip the natural gas-fired boilers with low $NO_X$ technology.

(ii) The site shall install, calibrate, maintain, and operate a continuous monitoring and recording system for measuring $NO_X$ emissions discharged to the atmosphere and opacity using a continuous emissions monitoring system or a predictive emissions monitoring system.

(iii) Within 180 days of the completion of the powerhouse conversion, as required by 40 CFR 52.2454, the site shall perform a performance test to quantify criteria pollutant emissions.

(2) [Reserved]

(v) The owner or operator of an affected facility may submit electronic quarterly reports for $SO_2$ and/or $NO_X$ and/or opacity in lieu of submitting the written reports required under paragraphs (h), (i), (j), (k) or (l) of this section. The format of each quarterly electronic report shall be coordinated with the permitting authority. The electronic report(s) shall be submitted no later than 30 days after the end of the calendar quarter and shall be accompanied by a certification statement from the owner or operator, indicating whether compliance with the applicable emission standards and minimum data requirements of this subpart was achieved during the reporting period. Before submitting reports in the electronic format, the owner or operator shall coordinate with the permitting authority to obtain their agreement to submit reports in this alternative format.

(w) The reporting period for the reports required under this subpart is each 6 month period. All reports shall be submitted to the Administrator and shall be postmarked by the 30th day following the end of the reporting period.

(x) Facility-specific $NO_X$ standard for Weyerhaeuser Company's No. 2 Power Boiler located in New Bern, North Carolina:

(1) *Standard for nitrogen oxides* . (i) When fossil fuel alone is combusted, the $NO_X$ emission limit for fossil fuel in § 60.44b(a) applies.

(ii) When fossil fuel and chemical by-product waste are simultaneously combusted, the $NO_X$ emission limit is 215 ng/J (0.5 lb/MMBtu).

(2) *Emission monitoring for nitrogen oxides* . (i) The $NO_X$ emissions shall be determined by the compliance and performance test methods and procedures for $NO_X$ in § 60.46b.

(ii) The monitoring of the $NO_X$ emissions shall be performed in accordance with § 60.48b.

(3) *Reporting and recordkeeping requirements* . (i) The owner or operator of the No. 2 Power Boiler shall submit a report on any excursions from the limits required by paragraph (x)(2) of this section to the Administrator with the quarterly report required by § 60.49b(i).

(ii) The owner or operator of the No. 2 Power Boiler shall keep records of the monitoring required by paragraph (x)(3) of this section for a period of 2 years following the date of such record.

(iii) The owner or operator of the No. 2 Power Boiler shall perform all the applicable reporting and recordkeeping requirements of § 60.49b.

(y) Facility-specific $NO_X$ standard for INEOS USA's AOGI located in Lima, Ohio:

(1) *Standard for* $NO_X$ . (i) When fossil fuel alone is combusted, the $NO_X$ emission limit for fossil fuel in § 60.44b(a) applies.

(ii) When fossil fuel and chemical byproduct/waste are simultaneously combusted, the $NO_X$ emission limit is 645 ng/J (1.5 lb/MMBtu).

(2) *Emission monitoring for* $NO_X$ . (i) The $NO_X$ emissions shall be determined by the compliance and performance test methods and procedures for $NO_X$ in § 60.46b.

(ii) The monitoring of the $NO_X$ emissions shall be performed in accordance with § 60.48b.

(3) *Reporting and recordkeeping requirements* . (i) The owner or operator of the AOGI shall submit a report on any excursions from the limits required by paragraph (y)(2) of this section to the Administrator with the quarterly report required by paragraph (i) of this section.

(ii) The owner or operator of the AOGI shall keep records of the monitoring required by paragraph (y)(3) of this section for a period of 2 years following the date of such record.

(iii) The owner or operator of the AOGI shall perform all the applicable reporting and recordkeeping requirements of this section.

[72 FR 32742, June 13, 2007, as amended at 74 FR 5089, Jan. 28, 2009; 77 FR 9461, Feb. 16, 2012]

**Attachment N**
**To Part 70 Operating Permit Renewal No. T129-25424-00003**

[Downloaded from the eCFR on May 13, 2013]

**Electronic Code of Federal Regulations**

**Title 40: Protection of Environment**

**Part 60, Subpart IIII—Standards of Performance for Stationary Compression Ignition Internal Combustion Engines**

Source: 71 FR 39172, July 11, 2006, unless otherwise noted.

**What This Subpart Covers**

**§ 60.4200 Am I subject to this subpart?**

(a) The provisions of this subpart are applicable to manufacturers, owners, and operators of stationary compression ignition (CI) internal combustion engines (ICE) and other persons as specified in paragraphs (a)(1) through (4) of this section. For the purposes of this subpart, the date that construction commences is the date the engine is ordered by the owner or operator.

(1) Manufacturers of stationary CI ICE with a displacement of less than 30 liters per cylinder where the model year is:

(i) 2007 or later, for engines that are not fire pump engines;

(ii) The model year listed in Table 3 to this subpart or later model year, for fire pump engines.

(2) Owners and operators of stationary CI ICE that commence construction after July 11, 2005, where the stationary CI ICE are:

(i) Manufactured after April 1, 2006, and are not fire pump engines, or

(ii) Manufactured as a certified National Fire Protection Association (NFPA) fire pump engine after July 1, 2006.

(3) Owners and operators of any stationary CI ICE that are modified or reconstructed after July 11, 2005 and any person that modifies or reconstructs any stationary CI ICE after July 11, 2005.

(4) The provisions of § 60.4208 of this subpart are applicable to all owners and operators of stationary CI ICE that commence construction after July 11, 2005.

(b) The provisions of this subpart are not applicable to stationary CI ICE being tested at a stationary CI ICE test cell/stand.

(c) If you are an owner or operator of an area source subject to this subpart, you are exempt from the obligation to obtain a permit under 40 CFR part 70 or 40 CFR part 71, provided you are not required to obtain a permit under 40 CFR 70.3(a) or 40 CFR 71.3(a) for a reason other than your status as an area source under this subpart. Notwithstanding the previous sentence, you must continue to comply with the provisions of this subpart applicable to area sources.

(d) Stationary CI ICE may be eligible for exemption from the requirements of this subpart as described in 40 CFR part 1068, subpart C (or the exemptions described in 40 CFR part 89, subpart J and 40 CFR part 94, subpart J, for engines that would need to be certified to standards in those parts), except that owners and operators, as well as manufacturers, may be eligible to request an exemption for national security.

(e) Owners and operators of facilities with CI ICE that are acting as temporary replacement units and that are located at a stationary source for less than 1 year and that have been properly certified as meeting the standards that would be applicable to such engine under the appropriate nonroad engine provisions, are not required to meet any other provisions under this subpart with regard to such engines.

[71 FR 39172, July 11, 2006, as amended at 76 FR 37967, June 28, 2011]

**Emission Standards for Manufacturers**

**§ 60.4201 What emission standards must I meet for non-emergency engines if I am a stationary CI internal combustion engine manufacturer?**

(a) Stationary CI internal combustion engine manufacturers must certify their 2007 model year and later non-emergency stationary CI ICE with a maximum engine power less than or equal to 2,237 kilowatt (KW) (3,000 horsepower (HP)) and a displacement of less than 10 liters per cylinder to the certification emission standards for new nonroad CI engines in 40 CFR 89.112, 40 CFR 89.113, 40 CFR 1039.101, 40 CFR 1039.102, 40 CFR 1039.104, 40 CFR 1039.105, 40 CFR 1039.107, and 40 CFR 1039.115, as applicable, for all pollutants, for the same model year and maximum engine power.

(b) Stationary CI internal combustion engine manufacturers must certify their 2007 through 2010 model year non-emergency stationary CI ICE with a maximum engine power greater than 2,237 KW (3,000 HP) and a displacement of less than 10 liters per cylinder to the emission standards in table 1 to this subpart, for all pollutants, for the same maximum engine power.

(c) Stationary CI internal combustion engine manufacturers must certify their 2011 model year and later non-emergency stationary CI ICE with a maximum engine power greater than 2,237 KW (3,000 HP) and a displacement of less than 10 liters per cylinder to the certification emission standards for new nonroad CI engines in 40 CFR 1039.101, 40 CFR 1039.102, 40 CFR 1039.104, 40 CFR 1039.105, 40 CFR 1039.107, and 40 CFR 1039.115, as applicable, for all pollutants, for the same maximum engine power.

(d) Stationary CI internal combustion engine manufacturers must certify the following non-emergency stationary CI ICE to the certification emission standards for new marine CI engines in 40 CFR 94.8, as applicable, for all pollutants, for the same displacement and maximum engine power:

(1) Their 2007 model year through 2012 non-emergency stationary CI ICE with a displacement of greater than or equal to 10 liters per cylinder and less than 30 liters per cylinder;

(2) Their 2013 model year non-emergency stationary CI ICE with a maximum engine power greater than or equal to 3,700 KW (4,958 HP) and a displacement of greater than or equal to 10 liters per cylinder and less than 15 liters per cylinder; and

(3) Their 2013 model year non-emergency stationary CI ICE with a displacement of greater than or equal to 15 liters per cylinder and less than 30 liters per cylinder.

(e) Stationary CI internal combustion engine manufacturers must certify the following non-emergency stationary CI ICE to the certification emission standards and other requirements for new marine CI engines in 40 CFR 1042.101, 40 CFR 1042.107, 40 CFR 1042.110, 40 CFR 1042.115, 40 CFR 1042.120, and 40 CFR 1042.145, as applicable, for all pollutants, for the same displacement and maximum engine power:

(1) Their 2013 model year non-emergency stationary CI ICE with a maximum engine power less than 3,700 KW (4,958 HP) and a displacement of greater than or equal to 10 liters per cylinder and less than 15 liters per cylinder; and

(2) Their 2014 model year and later non-emergency stationary CI ICE with a displacement of greater than or equal to 10 liters per cylinder and less than 30 liters per cylinder.

(f) Notwithstanding the requirements in paragraphs (a) through (c) of this section, stationary non-emergency CI ICE identified in paragraphs (a) and (c) may be certified to the provisions of 40 CFR part 94 or, if Table 1 to 40 CFR 1042.1 identifies 40 CFR part 1042 as being applicable, 40 CFR part 1042, if the engines will be used solely in either or both of the following locations:

(1) Areas of Alaska not accessible by the Federal Aid Highway System (FAHS); and

(2) Marine offshore installations.

(g) Notwithstanding the requirements in paragraphs (a) through (f) of this section, stationary CI internal combustion engine manufacturers are not required to certify reconstructed engines; however manufacturers may elect to do so. The reconstructed engine must be certified to the emission standards specified in paragraphs (a) through (e) of this section that are applicable to the model year, maximum engine power, and displacement of the reconstructed stationary CI ICE.

[71 FR 39172, July 11, 2006, as amended at 76 FR 37967, June 28, 2011]

**§ 60.4202 What emission standards must I meet for emergency engines if I am a stationary CI internal combustion engine manufacturer?**

(a) Stationary CI internal combustion engine manufacturers must certify their 2007 model year and later emergency stationary CI ICE with a maximum engine power less than or equal to 2,237 KW (3,000 HP) and a displacement of less than 10 liters per cylinder that are not fire pump engines to the emission standards specified in paragraphs (a)(1) through (2) of this section.

(1) For engines with a maximum engine power less than 37 KW (50 HP):

(i) The certification emission standards for new nonroad CI engines for the same model year and maximum engine power in 40 CFR 89.112 and 40 CFR 89.113 for all pollutants for model year 2007 engines, and

(ii) The certification emission standards for new nonroad CI engines in 40 CFR 1039.104, 40 CFR 1039.105, 40 CFR 1039.107, 40 CFR 1039.115, and table 2 to this subpart, for 2008 model year and later engines.

(2) For engines with a maximum engine power greater than or equal to 37 KW (50 HP), the certification emission standards for new nonroad CI engines for the same model year and maximum engine power in 40 CFR 89.112 and 40 CFR 89.113 for all pollutants beginning in model year 2007.

(b) Stationary CI internal combustion engine manufacturers must certify their 2007 model year and later emergency stationary CI ICE with a maximum engine power greater than 2,237 KW (3,000 HP) and a displacement of less than 10 liters per cylinder that are not fire pump engines to the emission standards specified in paragraphs (b)(1) through (2) of this section.

(1) For 2007 through 2010 model years, the emission standards in table 1 to this subpart, for all pollutants, for the same maximum engine power.

(2) For 2011 model year and later, the certification emission standards for new nonroad CI engines for engines of the same model year and maximum engine power in 40 CFR 89.112 and 40 CFR 89.113 for all pollutants.

(c) [Reserved]

(d) Beginning with the model years in table 3 to this subpart, stationary CI internal combustion engine manufacturers must certify their fire pump stationary CI ICE to the emission standards in table 4 to this subpart, for all pollutants, for the same model year and NFPA nameplate power.

(e) Stationary CI internal combustion engine manufacturers must certify the following emergency stationary CI ICE that are not fire pump engines to the certification emission standards for new marine CI engines in 40 CFR 94.8, as applicable, for all pollutants, for the same displacement and maximum engine power:

(1) Their 2007 model year through 2012 emergency stationary CI ICE with a displacement of greater than or equal to 10 liters per cylinder and less than 30 liters per cylinder;

(2) Their 2013 model year and later emergency stationary CI ICE with a maximum engine power greater than or equal to 3,700 KW (4,958 HP) and a displacement of greater than or equal to 10 liters per cylinder and less than 15 liters per cylinder;

(3) Their 2013 model year emergency stationary CI ICE with a displacement of greater than or equal to 15 liters per cylinder and less than 30 liters per cylinder; and

(4) Their 2014 model year and later emergency stationary CI ICE with a maximum engine power greater than or equal to 2,000 KW (2,682 HP) and a displacement of greater than or equal to 15 liters per cylinder and less than 30 liters per cylinder.

(f) Stationary CI internal combustion engine manufacturers must certify the following emergency stationary CI ICE to the certification emission standards and other requirements applicable to Tier 3 new marine CI engines in 40 CFR 1042.101, 40 CFR 1042.107, 40 CFR 1042.115, 40 CFR 1042.120, and 40 CFR 1042.145, for all pollutants, for the same displacement and maximum engine power:

(1) Their 2013 model year and later emergency stationary CI ICE with a maximum engine power less than 3,700 KW (4,958 HP) and a displacement of greater than or equal to 10 liters per cylinder and less than 15 liters per cylinder; and

(2) Their 2014 model year and later emergency stationary CI ICE with a maximum engine power less than 2,000 KW (2,682 HP) and a displacement of greater than or equal to 15 liters per cylinder and less than 30 liters per cylinder.

(g) Notwithstanding the requirements in paragraphs (a) through (d) of this section, stationary emergency CI internal combustion engines identified in paragraphs (a) and (c) may be certified to the provisions of 40 CFR part 94 or, if Table 2 to 40 CFR 1042.101 identifies Tier 3 standards as being applicable, the requirements applicable to Tier 3 engines in 40 CFR part 1042, if the engines will be used solely in either or both of the following locations:

(1) Areas of Alaska not accessible by the FAHS; and

(2) Marine offshore installations.

(h) Notwithstanding the requirements in paragraphs (a) through (f) of this section, stationary CI internal combustion engine manufacturers are not required to certify reconstructed engines; however manufacturers may elect to do so. The reconstructed engine must be certified to the emission standards specified in paragraphs (a) through (f) of this section that are applicable to the model year, maximum engine power and displacement of the reconstructed emergency stationary CI ICE.

[71 FR 39172, July 11, 2006, as amended at 76 FR 37968, June 28, 2011]

**§ 60.4203 How long must my engines meet the emission standards if I am a manufacturer of stationary CI internal combustion engines?**

Engines manufactured by stationary CI internal combustion engine manufacturers must meet the emission standards as required in §§ 60.4201 and 60.4202 during the certified emissions life of the engines.

[76 FR 37968, June 28, 2011]

**Emission Standards for Owners and Operators**

**§ 60.4204 What emission standards must I meet for non-emergency engines if I am an owner or operator of a stationary CI internal combustion engine?**

(a) Owners and operators of pre-2007 model year non-emergency stationary CI ICE with a displacement of less than 10 liters per cylinder must comply with the emission standards in table 1 to this subpart. Owners and operators of pre-2007 model year non-emergency stationary CI ICE with a displacement of greater than or equal to 10 liters per cylinder and less than 30 liters per cylinder must comply with the emission standards in 40 CFR 94.8(a)(1).

(b) Owners and operators of 2007 model year and later non-emergency stationary CI ICE with a displacement of less than 30 liters per cylinder must comply with the emission standards for new CI engines in § 60.4201 for their 2007 model year and later stationary CI ICE, as applicable.

(c) Owners and operators of non-emergency stationary CI engines with a displacement of greater than or equal to 30 liters per cylinder must meet the following requirements:

(1) For engines installed prior to January 1, 2012, limit the emissions of NOX in the stationary CI internal combustion engine exhaust to the following:

(i) 17.0 grams per kilowatt-hour (g/KW-hr) (12.7 grams per horsepower-hr (g/HP-hr)) when maximum engine speed is less than 130 revolutions per minute (rpm);

(ii) $45 \cdot n^{-0.2}$ g/KW-hr ($34 \cdot n^{-0.2}$ g/HP-hr) when maximum engine speed is 130 or more but less than 2,000 rpm, where n is maximum engine speed; and

(iii) 9.8 g/KW-hr (7.3 g/HP-hr) when maximum engine speed is 2,000 rpm or more.

(2) For engines installed on or after January 1, 2012 and before January 1, 2016, limit the emissions of NOX in the stationary CI internal combustion engine exhaust to the following:

(i) 14.4 g/KW-hr (10.7 g/HP-hr) when maximum engine speed is less than 130 rpm;

(ii) $44 \cdot n^{-0.23}$ g/KW-hr ($33 \cdot n^{-0.23}$ g/HP-hr) when maximum engine speed is greater than or equal to 130 but less than 2,000 rpm and where n is maximum engine speed; and

(iii) 7.7 g/KW-hr (5.7 g/HP-hr) when maximum engine speed is greater than or equal to 2,000 rpm.

(3) For engines installed on or after January 1, 2016, limit the emissions of NOX in the stationary CI internal combustion engine exhaust to the following:

(i) 3.4 g/KW-hr (2.5 g/HP-hr) when maximum engine speed is less than 130 rpm;

(ii) $9.0 \cdot n^{-0.20}$ g/KW-hr ($6.7 \cdot n^{-0.20}$ g/HP-hr) where n (maximum engine speed) is 130 or more but less than 2,000 rpm; and

(iii) 2.0 g/KW-hr (1.5 g/HP-hr) where maximum engine speed is greater than or equal to 2,000 rpm.

(4) Reduce particulate matter (PM) emissions by 60 percent or more, or limit the emissions of PM in the stationary CI internal combustion engine exhaust to 0.15 g/KW-hr (0.11 g/HP-hr).

(d) Owners and operators of non-emergency stationary CI ICE with a displacement of less than 30 liters per cylinder who conduct performance tests in-use must meet the not-to-exceed (NTE) standards as indicated in § 60.4212.

(e) Owners and operators of any modified or reconstructed non-emergency stationary CI ICE subject to this subpart must meet the emission standards applicable to the model year, maximum engine power, and displacement of the modified or reconstructed non-emergency stationary CI ICE that are specified in paragraphs (a) through (d) of this section.

[71 FR 39172, July 11, 2006, as amended at 76 FR 37968, June 28, 2011]

**§ 60.4205 What emission standards must I meet for emergency engines if I am an owner or operator of a stationary CI internal combustion engine?**

(a) Owners and operators of pre-2007 model year emergency stationary CI ICE with a displacement of less than 10 liters per cylinder that are not fire pump engines must comply with the emission standards in Table 1 to this subpart. Owners and operators of pre-2007 model year emergency stationary CI ICE with a displacement of greater than or equal to 10 liters per cylinder and less than 30 liters per cylinder that are not fire pump engines must comply with the emission standards in 40 CFR 94.8(a)(1).

(b) Owners and operators of 2007 model year and later emergency stationary CI ICE with a displacement of less than 30 liters per cylinder that are not fire pump engines must comply with the emission standards for new nonroad CI engines in § 60.4202, for all pollutants, for the same model year and maximum engine power for their 2007 model year and later emergency stationary CI ICE.

(c) Owners and operators of fire pump engines with a displacement of less than 30 liters per cylinder must comply with the emission standards in table 4 to this subpart, for all pollutants.

(d) Owners and operators of emergency stationary CI engines with a displacement of greater than or equal to 30 liters per cylinder must meet the requirements in this section.

(1) For engines installed prior to January 1, 2012, limit the emissions of NOX in the stationary CI internal combustion engine exhaust to the following:

(i) 17.0 g/KW-hr (12.7 g/HP-hr) when maximum engine speed is less than 130 rpm;

(ii) $45 \cdot n^{-0.2}$ g/KW-hr ($34 \cdot n^{-0.2}$ g/HP-hr) when maximum engine speed is 130 or more but less than 2,000 rpm, where n is maximum engine speed; and

(iii) 9.8 g/kW-hr (7.3 g/HP-hr) when maximum engine speed is 2,000 rpm or more.

(2) For engines installed on or after January 1, 2012, limit the emissions of NOX in the stationary CI internal combustion engine exhaust to the following:

(i) 14.4 g/KW-hr (10.7 g/HP-hr) when maximum engine speed is less than 130 rpm;

(ii) $44 \cdot n^{-0.23}$ g/KW-hr ($33 \cdot n^{-0.23}$ g/HP-hr) when maximum engine speed is greater than or equal to 130 but less than 2,000 rpm and where n is maximum engine speed; and

(iii) 7.7 g/KW-hr (5.7 g/HP-hr) when maximum engine speed is greater than or equal to 2,000 rpm.

(3) Limit the emissions of PM in the stationary CI internal combustion engine exhaust to 0.40 g/KW-hr (0.30 g/HP-hr).

(e) Owners and operators of emergency stationary CI ICE with a displacement of less than 30 liters per cylinder who conduct performance tests in-use must meet the NTE standards as indicated in § 60.4212.

(f) Owners and operators of any modified or reconstructed emergency stationary CI ICE subject to this subpart must meet the emission standards applicable to the model year, maximum engine power, and displacement of the modified or reconstructed CI ICE that are specified in paragraphs (a) through (e) of this section.

[71 FR 39172, July 11, 2006, as amended at 76 FR 37969, June 28, 2011]

**§ 60.4206 How long must I meet the emission standards if I am an owner or operator of a stationary CI internal combustion engine?**

Owners and operators of stationary CI ICE must operate and maintain stationary CI ICE that achieve the emission standards as required in §§ 60.4204 and 60.4205 over the entire life of the engine.

[76 FR 37969, June 28, 2011]

**Fuel Requirements for Owners and Operators**

**§ 60.4207 What fuel requirements must I meet if I am an owner or operator of a stationary CI internal combustion engine subject to this subpart?**

(a) Beginning October 1, 2007, owners and operators of stationary CI ICE subject to this subpart that use diesel fuel must use diesel fuel that meets the requirements of 40 CFR 80.510(a).

(b) Beginning October 1, 2010, owners and operators of stationary CI ICE subject to this subpart with a displacement of less than 30 liters per cylinder that use diesel fuel must use diesel fuel that meets the requirements of 40 CFR 80.510(b) for nonroad diesel fuel, except that any existing diesel fuel purchased (or otherwise obtained) prior to October 1, 2010, may be used until depleted.

(c) [Reserved]

(d) Beginning June 1, 2012, owners and operators of stationary CI ICE subject to this subpart with a displacement of greater than or equal to 30 liters per cylinder are no longer subject to the requirements of paragraph (a) of this section, and must use fuel that meets a maximum per-gallon sulfur content of 1,000 parts per million (ppm).

(e) Stationary CI ICE that have a national security exemption under § 60.4200(d) are also exempt from the fuel requirements in this section.

[71 FR 39172, July 11, 2006, as amended at 76 FR 37969, June 28, 2011; 78 FR 6695, Jan. 30, 2013]

**Other Requirements for Owners and Operators**

**§ 60.4208 What is the deadline for importing or installing stationary CI ICE produced in previous model years?**

(a) After December 31, 2008, owners and operators may not install stationary CI ICE (excluding fire pump engines) that do not meet the applicable requirements for 2007 model year engines.

(b) After December 31, 2009, owners and operators may not install stationary CI ICE with a maximum engine power of less than 19 KW (25 HP) (excluding fire pump engines) that do not meet the applicable requirements for 2008 model year engines.

(c) After December 31, 2014, owners and operators may not install non-emergency stationary CI ICE with a maximum engine power of greater than or equal to 19 KW (25 HP) and less than 56 KW (75 HP) that do not meet the applicable requirements for 2013 model year non-emergency engines.

(d) After December 31, 2013, owners and operators may not install non-emergency stationary CI ICE with a maximum engine power of greater than or equal to 56 KW (75 HP) and less than 130 KW (175 HP) that do not meet the applicable requirements for 2012 model year non-emergency engines.

(e) After December 31, 2012, owners and operators may not install non-emergency stationary CI ICE with a maximum engine power of greater than or equal to 130 KW (175 HP), including those above 560 KW (750 HP), that do not meet the applicable requirements for 2011 model year non-emergency engines.

(f) After December 31, 2016, owners and operators may not install non-emergency stationary CI ICE with a maximum engine power of greater than or equal to 560 KW (750 HP) that do not meet the applicable requirements for 2015 model year non-emergency engines.

(g) After December 31, 2018, owners and operators may not install non-emergency stationary CI ICE with a maximum engine power greater than or equal to 600 KW (804 HP) and less than 2,000 KW (2,680 HP) and a displacement of greater than or equal to 10 liters per cylinder and less than 30 liters per cylinder that do not meet the applicable requirements for 2017 model year non-emergency engines.

(h) In addition to the requirements specified in §§ 60.4201, 60.4202, 60.4204, and 60.4205, it is prohibited to import stationary CI ICE with a displacement of less than 30 liters per cylinder that do not meet the applicable requirements specified in paragraphs (a) through (g) of this section after the dates specified in paragraphs (a) through (g) of this section.

(i) The requirements of this section do not apply to owners or operators of stationary CI ICE that have been modified, reconstructed, and do not apply to engines that were removed from one existing location and reinstalled at a new location.

[71 FR 39172, July 11, 2006, as amended at 76 FR 37969, June 28, 2011]

**§ 60.4209 What are the monitoring requirements if I am an owner or operator of a stationary CI internal combustion engine?**

If you are an owner or operator, you must meet the monitoring requirements of this section. In addition, you must also meet the monitoring requirements specified in § 60.4211.

(a) If you are an owner or operator of an emergency stationary CI internal combustion engine that does not meet the standards applicable to non-emergency engines, you must install a non-resettable hour meter prior to startup of the engine.

(b) If you are an owner or operator of a stationary CI internal combustion engine equipped with a diesel particulate filter to comply with the emission standards in § 60.4204, the diesel particulate filter must be installed with a backpressure monitor that notifies the owner or operator when the high backpressure limit of the engine is approached.

[71 FR 39172, July 11, 2006, as amended at 76 FR 37969, June 28, 2011]

**Compliance Requirements**

**§ 60.4210 What are my compliance requirements if I am a stationary CI internal combustion engine manufacturer?**

(a) Stationary CI internal combustion engine manufacturers must certify their stationary CI ICE with a displacement of less than 10 liters per cylinder to the emission standards specified in § 60.4201(a) through (c) and § 60.4202(a), (b) and (d) using the certification procedures required in 40 CFR part 89, subpart B, or 40 CFR part 1039, subpart C, as applicable, and must test their engines as specified in those parts. For the purposes of this subpart, engines certified to the standards in table 1 to this subpart shall be subject to the same requirements as engines certified to the standards in 40 CFR part 89. For the purposes of this subpart, engines certified to the standards in table 4 to this subpart shall be subject to the same requirements as engines certified to the standards in 40 CFR part 89, except that engines with NFPA nameplate power of less than 37 KW (50 HP) certified to model year 2011 or later standards shall be subject to the same requirements as engines certified to the standards in 40 CFR part 1039.

(b) Stationary CI internal combustion engine manufacturers must certify their stationary CI ICE with a displacement of greater than or equal to 10 liters per cylinder and less than 30 liters per cylinder to the emission standards specified in § 60.4201(d) and (e) and § 60.4202(e) and (f) using the certification procedures required in 40 CFR part 94, subpart C, or 40 CFR part 1042, subpart C, as applicable, and must test their engines as specified in 40 CFR part 94 or 1042, as applicable.

(c) Stationary CI internal combustion engine manufacturers must meet the requirements of 40 CFR 1039.120, 1039.125, 1039.130, and 1039.135, and 40 CFR part 1068 for engines that are certified to the emission standards in 40 CFR part 1039. Stationary CI internal combustion engine manufacturers must meet the corresponding provisions of 40 CFR part 89, 40 CFR part 94 or 40 CFR part 1042 for engines that would be covered by that part if they were nonroad (including marine) engines. Labels on such engines must refer to stationary engines, rather than or in addition to nonroad or marine engines, as appropriate. Stationary CI internal combustion engine manufacturers must label their engines according to paragraphs (c)(1) through (3) of this section.

(1) Stationary CI internal combustion engines manufactured from January 1, 2006 to March 31, 2006 (January 1, 2006 to June 30, 2006 for fire pump engines), other than those that are part of certified engine families under the nonroad CI engine regulations, must be labeled according to 40 CFR 1039.20.

(2) Stationary CI internal combustion engines manufactured from April 1, 2006 to December 31, 2006 (or, for fire pump engines, July 1, 2006 to December 31 of the year preceding the year listed in table 3 to this subpart) must be labeled according to paragraphs (c)(2)(i) through (iii) of this section:

(i) Stationary CI internal combustion engines that are part of certified engine families under the nonroad regulations must meet the labeling requirements for nonroad CI engines, but do not have to meet the labeling requirements in 40 CFR 1039.20.

(ii) Stationary CI internal combustion engines that meet Tier 1 requirements (or requirements for fire pumps) under this subpart, but do not meet the requirements applicable to nonroad CI engines must be labeled according to 40 CFR 1039.20. The engine manufacturer may add language to the label clarifying that the engine meets Tier 1 requirements (or requirements for fire pumps) of this subpart.

(iii) Stationary CI internal combustion engines manufactured after April 1, 2006 that do not meet Tier 1 requirements of this subpart, or fire pumps engines manufactured after July 1, 2006 that do not meet the requirements for fire pumps under this subpart, may not be used in the U.S. If any such engines are manufactured in the U.S. after April 1, 2006 (July 1, 2006 for fire pump engines), they must be exported or must be brought into compliance with the appropriate standards prior to initial operation. The export provisions of 40 CFR 1068.230 would apply to engines for export and the manufacturers must label such engines according to 40 CFR 1068.230.

(3) Stationary CI internal combustion engines manufactured after January 1, 2007 (for fire pump engines, after January 1 of the year listed in table 3 to this subpart, as applicable) must be labeled according to paragraphs (c)(3)(i) through (iii) of this section.

(i) Stationary CI internal combustion engines that meet the requirements of this subpart and the corresponding requirements for nonroad (including marine) engines of the same model year and HP must be labeled according to the provisions in 40 CFR parts 89, 94, 1039 or 1042, as appropriate.

(ii) Stationary CI internal combustion engines that meet the requirements of this subpart, but are not certified to the standards applicable to nonroad (including marine) engines of the same model year and HP must be labeled according to the provisions in 40 CFR parts 89, 94, 1039 or 1042, as appropriate, but the words “stationary” must be included instead of “nonroad” or “marine” on the label. In addition, such engines must be labeled according to 40 CFR 1039.20.

(iii) Stationary CI internal combustion engines that do not meet the requirements of this subpart must be labeled according to 40 CFR 1068.230 and must be exported under the provisions of 40 CFR 1068.230.

(d) An engine manufacturer certifying an engine family or families to standards under this subpart that are identical to standards applicable under 40 CFR parts 89, 94, 1039 or 1042 for that model year may certify any such family that contains both nonroad (including marine) and stationary engines as a single engine family and/or may include any

such family containing stationary engines in the averaging, banking and trading provisions applicable for such engines under those parts.

(e) Manufacturers of engine families discussed in paragraph (d) of this section may meet the labeling requirements referred to in paragraph (c) of this section for stationary CI ICE by either adding a separate label containing the information required in paragraph (c) of this section or by adding the words “and stationary” after the word “nonroad” or “marine,” as appropriate, to the label.

(f) Starting with the model years shown in table 5 to this subpart, stationary CI internal combustion engine manufacturers must add a permanent label stating that the engine is for stationary emergency use only to each new emergency stationary CI internal combustion engine greater than or equal to 19 KW (25 HP) that meets all the emission standards for emergency engines in § 60.4202 but does not meet all the emission standards for non-emergency engines in § 60.4201. The label must be added according to the labeling requirements specified in 40 CFR 1039.135(b). Engine manufacturers must specify in the owner's manual that operation of emergency engines is limited to emergency operations and required maintenance and testing.

(g) Manufacturers of fire pump engines may use the test cycle in table 6 to this subpart for testing fire pump engines and may test at the NFPA certified nameplate HP, provided that the engine is labeled as “Fire Pump Applications Only”.

(h) Engine manufacturers, including importers, may introduce into commerce uncertified engines or engines certified to earlier standards that were manufactured before the new or changed standards took effect until inventories are depleted, as long as such engines are part of normal inventory. For example, if the engine manufacturers' normal industry practice is to keep on hand a one-month supply of engines based on its projected sales, and a new tier of standards starts to apply for the 2009 model year, the engine manufacturer may manufacture engines based on the normal inventory requirements late in the 2008 model year, and sell those engines for installation. The engine manufacturer may not circumvent the provisions of §§ 60.4201 or 60.4202 by stockpiling engines that are built before new or changed standards take effect. Stockpiling of such engines beyond normal industry practice is a violation of this subpart.

(i) The replacement engine provisions of 40 CFR 89.1003(b)(7), 40 CFR 94.1103(b)(3), 40 CFR 94.1103(b)(4) and 40 CFR 1068.240 are applicable to stationary CI engines replacing existing equipment that is less than 15 years old.

[71 FR 39172, July 11, 2006, as amended at 76 FR 37969, June 28, 2011]

**§ 60.4211 What are my compliance requirements if I am an owner or operator of a stationary CI internal combustion engine?**

(a) If you are an owner or operator and must comply with the emission standards specified in this subpart, you must do all of the following, except as permitted under paragraph (g) of this section:

(1) Operate and maintain the stationary CI internal combustion engine and control device according to the manufacturer's emission-related written instructions;

(2) Change only those emission-related settings that are permitted by the manufacturer; and

(3) Meet the requirements of 40 CFR parts 89, 94 and/or 1068, as they apply to you.

(b) If you are an owner or operator of a pre-2007 model year stationary CI internal combustion engine and must comply with the emission standards specified in §§ 60.4204(a) or 60.4205(a), or if you are an owner or operator of a CI fire pump engine that is manufactured prior to the model years in table 3 to this subpart and must comply with the emission standards specified in § 60.4205(c), you must demonstrate compliance according to one of the methods specified in paragraphs (b)(1) through (5) of this section.

(1) Purchasing an engine certified according to 40 CFR part 89 or 40 CFR part 94, as applicable, for the same model year and maximum engine power. The engine must be installed and configured according to the manufacturer's specifications.

(2) Keeping records of performance test results for each pollutant for a test conducted on a similar engine. The test must have been conducted using the same methods specified in this subpart and these methods must have been followed correctly.

(3) Keeping records of engine manufacturer data indicating compliance with the standards.

(4) Keeping records of control device vendor data indicating compliance with the standards.

(5) Conducting an initial performance test to demonstrate compliance with the emission standards according to the requirements specified in § 60.4212, as applicable.

(c) If you are an owner or operator of a 2007 model year and later stationary CI internal combustion engine and must comply with the emission standards specified in § 60.4204(b) or § 60.4205(b), or if you are an owner or operator of a CI fire pump engine that is manufactured during or after the model year that applies to your fire pump engine power rating in table 3 to this subpart and must comply with the emission standards specified in § 60.4205(c), you must comply by purchasing an engine certified to the emission standards in § 60.4204(b), or § 60.4205(b) or (c), as applicable, for the same model year and maximum (or in the case of fire pumps, NFPA nameplate) engine power. The engine must be installed and configured according to the manufacturer's emission-related specifications, except as permitted in paragraph (g) of this section.

(d) If you are an owner or operator and must comply with the emission standards specified in § 60.4204(c) or § 60.4205(d), you must demonstrate compliance according to the requirements specified in paragraphs (d)(1) through (3) of this section.

(1) Conducting an initial performance test to demonstrate initial compliance with the emission standards as specified in § 60.4213.

(2) Establishing operating parameters to be monitored continuously to ensure the stationary internal combustion engine continues to meet the emission standards. The owner or operator must petition the Administrator for approval of operating parameters to be monitored continuously. The petition must include the information described in paragraphs (d)(2)(i) through (v) of this section.

(i) Identification of the specific parameters you propose to monitor continuously;

(ii) A discussion of the relationship between these parameters and NOX and PM emissions, identifying how the emissions of these pollutants change with changes in these parameters, and how limitations on these parameters will serve to limit NOX and PM emissions;

(iii) A discussion of how you will establish the upper and/or lower values for these parameters which will establish the limits on these parameters in the operating limitations;

(iv) A discussion identifying the methods and the instruments you will use to monitor these parameters, as well as the relative accuracy and precision of these methods and instruments; and

(v) A discussion identifying the frequency and methods for recalibrating the instruments you will use for monitoring these parameters.

(3) For non-emergency engines with a displacement of greater than or equal to 30 liters per cylinder, conducting annual performance tests to demonstrate continuous compliance with the emission standards as specified in § 60.4213.

(e) If you are an owner or operator of a modified or reconstructed stationary CI internal combustion engine and must comply with the emission standards specified in § 60.4204(e) or § 60.4205(f), you must demonstrate compliance according to one of the methods specified in paragraphs (e)(1) or (2) of this section.

(1) Purchasing, or otherwise owning or operating, an engine certified to the emission standards in § 60.4204(e) or § 60.4205(f), as applicable.

(2) Conducting a performance test to demonstrate initial compliance with the emission standards according to the requirements specified in § 60.4212 or § 60.4213, as appropriate. The test must be conducted within 60 days after the engine commences operation after the modification or reconstruction.

(f) If you own or operate an emergency stationary ICE, you must operate the emergency stationary ICE according to the requirements in paragraphs (f)(1) through (3) of this section. In order for the engine to be considered an emergency stationary ICE under this subpart, any operation other than emergency operation, maintenance and testing, emergency demand response, and operation in non-emergency situations for 50 hours per year, as described in paragraphs (f)(1) through (3) of this section, is prohibited. If you do not operate the engine according to the requirements in paragraphs (f)(1) through (3) of this section, the engine will not be considered an emergency engine under this subpart and must meet all requirements for non-emergency engines.

(1) There is no time limit on the use of emergency stationary ICE in emergency situations.

(2) You may operate your emergency stationary ICE for any combination of the purposes specified in paragraphs (f)(2)(i) through (iii) of this section for a maximum of 100 hours per calendar year. Any operation for non-emergency situations as allowed by paragraph (f)(3) of this section counts as part of the 100 hours per calendar year allowed by this paragraph (f)(2).

(i) Emergency stationary ICE may be operated for maintenance checks and readiness testing, provided that the tests are recommended by federal, state or local government, the manufacturer, the vendor, the regional transmission organization or equivalent balancing authority and transmission operator, or the insurance company associated with the engine. The owner or operator may petition the Administrator for approval of additional hours to be used for maintenance checks and readiness testing, but a petition is not required if the owner or operator maintains records indicating that federal, state, or local standards require maintenance and testing of emergency ICE beyond 100 hours per calendar year.

(ii) Emergency stationary ICE may be operated for emergency demand response for periods in which the Reliability Coordinator under the North American Electric Reliability Corporation (NERC) Reliability Standard EOP-002-3, Capacity and Energy Emergencies (incorporated by reference, see § 60.17), or other authorized entity as determined by the Reliability Coordinator, has declared an Energy Emergency Alert Level 2 as defined in the NERC Reliability Standard EOP-002-3.

(iii) Emergency stationary ICE may be operated for periods where there is a deviation of voltage or frequency of 5 percent or greater below standard voltage or frequency.

(3) Emergency stationary ICE may be operated for up to 50 hours per calendar year in non-emergency situations. The 50 hours of operation in non-emergency situations are counted as part of the 100 hours per calendar year for maintenance and testing and emergency demand response provided in paragraph (f)(2) of this section. Except as provided in paragraph (f)(3)(i) of this section, the 50 hours per calendar year for non-emergency situations cannot be used for peak shaving or non-emergency demand response, or to generate income for a facility to an electric grid or otherwise supply power as part of a financial arrangement with another entity.

(i) The 50 hours per year for non-emergency situations can be used to supply power as part of a financial arrangement with another entity if all of the following conditions are met:

(A) The engine is dispatched by the local balancing authority or local transmission and distribution system operator;

(B) The dispatch is intended to mitigate local transmission and/or distribution limitations so as to avert potential voltage collapse or line overloads that could lead to the interruption of power supply in a local area or region.

(C) The dispatch follows reliability, emergency operation or similar protocols that follow specific NERC, regional, state, public utility commission or local standards or guidelines.

(D) The power is provided only to the facility itself or to support the local transmission and distribution system.

(E) The owner or operator identifies and records the entity that dispatches the engine and the specific NERC, regional, state, public utility commission or local standards or guidelines that are being followed for dispatching the

engine. The local balancing authority or local transmission and distribution system operator may keep these records on behalf of the engine owner or operator.

(ii) [Reserved]

(g) If you do not install, configure, operate, and maintain your engine and control device according to the manufacturer's emission-related written instructions, or you change emission-related settings in a way that is not permitted by the manufacturer, you must demonstrate compliance as follows:

(1) If you are an owner or operator of a stationary CI internal combustion engine with maximum engine power less than 100 HP, you must keep a maintenance plan and records of conducted maintenance to demonstrate compliance and must, to the extent practicable, maintain and operate the engine in a manner consistent with good air pollution control practice for minimizing emissions. In addition, if you do not install and configure the engine and control device according to the manufacturer's emission-related written instructions, or you change the emission-related settings in a way that is not permitted by the manufacturer, you must conduct an initial performance test to demonstrate compliance with the applicable emission standards within 1 year of such action.

(2) If you are an owner or operator of a stationary CI internal combustion engine greater than or equal to 100 HP and less than or equal to 500 HP, you must keep a maintenance plan and records of conducted maintenance and must, to the extent practicable, maintain and operate the engine in a manner consistent with good air pollution control practice for minimizing emissions. In addition, you must conduct an initial performance test to demonstrate compliance with the applicable emission standards within 1 year of startup, or within 1 year after an engine and control device is no longer installed, configured, operated, and maintained in accordance with the manufacturer's emission-related written instructions, or within 1 year after you change emission-related settings in a way that is not permitted by the manufacturer.

(3) If you are an owner or operator of a stationary CI internal combustion engine greater than 500 HP, you must keep a maintenance plan and records of conducted maintenance and must, to the extent practicable, maintain and operate the engine in a manner consistent with good air pollution control practice for minimizing emissions. In addition, you must conduct an initial performance test to demonstrate compliance with the applicable emission standards within 1 year of startup, or within 1 year after an engine and control device is no longer installed, configured, operated, and maintained in accordance with the manufacturer's emission-related written instructions, or within 1 year after you change emission-related settings in a way that is not permitted by the manufacturer. You must conduct subsequent performance testing every 8,760 hours of engine operation or 3 years, whichever comes first, thereafter to demonstrate compliance with the applicable emission standards.

[71 FR 39172, July 11, 2006, as amended at 76 FR 37970, June 28, 2011; 78 FR 6695, Jan. 30, 2013]

**Testing Requirements for Owners and Operators**

**§ 60.4212 What test methods and other procedures must I use if I am an owner or operator of a stationary CI internal combustion engine with a displacement of less than 30 liters per cylinder?**

Owners and operators of stationary CI ICE with a displacement of less than 30 liters per cylinder who conduct performance tests pursuant to this subpart must do so according to paragraphs (a) through (e) of this section.

(a) The performance test must be conducted according to the in-use testing procedures in 40 CFR part 1039, subpart F, for stationary CI ICE with a displacement of less than 10 liters per cylinder, and according to 40 CFR part 1042, subpart F, for stationary CI ICE with a displacement of greater than or equal to 10 liters per cylinder and less than 30 liters per cylinder.

(b) Exhaust emissions from stationary CI ICE that are complying with the emission standards for new CI engines in 40 CFR part 1039 must not exceed the not-to-exceed (NTE) standards for the same model year and maximum engine power as required in 40 CFR 1039.101(e) and 40 CFR 1039.102(g)(1), except as specified in 40 CFR 1039.104(d). This requirement starts when NTE requirements take effect for nonroad diesel engines under 40 CFR part 1039.

(c) Exhaust emissions from stationary CI ICE that are complying with the emission standards for new CI engines in 40 CFR 89.112 or 40 CFR 94.8, as applicable, must not exceed the NTE numerical requirements, rounded to the same number of decimal places as the applicable standard in 40 CFR 89.112 or 40 CFR 94.8, as applicable, determined from the following equation:

$$\text{NTE requirement for each pollutant} = (1.25) \times (\text{STD}) \qquad \text{(Eq. 1)}$$

Where:

STD = The standard specified for that pollutant in 40 CFR 89.112 or 40 CFR 94.8, as applicable.

Alternatively, stationary CI ICE that are complying with the emission standards for new CI engines in 40 CFR 89.112 or 40 CFR 94.8 may follow the testing procedures specified in § 60.4213 of this subpart, as appropriate.

(d) Exhaust emissions from stationary CI ICE that are complying with the emission standards for pre-2007 model year engines in § 60.4204(a), § 60.4205(a), or § 60.4205(c) must not exceed the NTE numerical requirements, rounded to the same number of decimal places as the applicable standard in § 60.4204(a), § 60.4205(a), or § 60.4205(c), determined from the equation in paragraph (c) of this section.

Where:

STD = The standard specified for that pollutant in § 60.4204(a), § 60.4205(a), or § 60.4205(c).

Alternatively, stationary CI ICE that are complying with the emission standards for pre-2007 model year engines in § 60.4204(a), § 60.4205(a), or § 60.4205(c) may follow the testing procedures specified in § 60.4213, as appropriate.

(e) Exhaust emissions from stationary CI ICE that are complying with the emission standards for new CI engines in 40 CFR part 1042 must not exceed the NTE standards for the same model year and maximum engine power as required in 40 CFR 1042.101(c).

[71 FR 39172, July 11, 2006, as amended at 76 FR 37971, June 28, 2011]

**§ 60.4213 What test methods and other procedures must I use if I am an owner or operator of a stationary CI internal combustion engine with a displacement of greater than or equal to 30 liters per cylinder?**

Owners and operators of stationary CI ICE with a displacement of greater than or equal to 30 liters per cylinder must conduct performance tests according to paragraphs (a) through (f) of this section.

(a) Each performance test must be conducted according to the requirements in § 60.8 and under the specific conditions that this subpart specifies in table 7. The test must be conducted within 10 percent of 100 percent peak (or the highest achievable) load.

(b) You may not conduct performance tests during periods of startup, shutdown, or malfunction, as specified in § 60.8(c).

(c) You must conduct three separate test runs for each performance test required in this section, as specified in § 60.8(f). Each test run must last at least 1 hour.

(d) To determine compliance with the percent reduction requirement, you must follow the requirements as specified in paragraphs (d)(1) through (3) of this section.

(1) You must use Equation 2 of this section to determine compliance with the percent reduction requirement:

$$\frac{C_i - C_o}{C_i} \times 100 = R \qquad \text{(Eq. 2)}$$

Where:

Ci = concentration of NOX or PM at the control device inlet,

Co = concentration of NOX or PM at the control device outlet, and

R = percent reduction of NOX or PM emissions.

(2) You must normalize the NOX or PM concentrations at the inlet and outlet of the control device to a dry basis and to 15 percent oxygen (O2 ) using Equation 3 of this section, or an equivalent percent carbon dioxide (CO2 ) using the procedures described in paragraph (d)(3) of this section.

$$C_{adj} = C_d \frac{5.9}{20.9 - \% O_2} \qquad \text{(Eq. 3)}$$

Where:

Cadj = Calculated NOX or PM concentration adjusted to 15 percent O2 .

Cd = Measured concentration of NOX or PM, uncorrected.

5.9 = 20.9 percent O2 −15 percent O2 , the defined O2 correction value, percent.

%O2 = Measured O2 concentration, dry basis, percent.

(3) If pollutant concentrations are to be corrected to 15 percent O2 and CO2 concentration is measured in lieu of O2 concentration measurement, a CO2 correction factor is needed. Calculate the CO2 correction factor as described in paragraphs (d)(3)(i) through (iii) of this section.

(i) Calculate the fuel-specific Fo value for the fuel burned during the test using values obtained from Method 19, Section 5.2, and the following equation:

$$F_o = \frac{0.209 F_d}{F_c} \qquad \text{(Eq. 4)}$$

Where:

Fo = Fuel factor based on the ratio of O2 volume to the ultimate CO2 volume produced by the fuel at zero percent excess air.

0.209 = Fraction of air that is O2 , percent/100.

Fd = Ratio of the volume of dry effluent gas to the gross calorific value of the fuel from Method 19, dsm3 /J (dscf/106 Btu).

Fc = Ratio of the volume of CO2 produced to the gross calorific value of the fuel from Method 19, dsm3 /J (dscf/106 Btu).

(ii) Calculate the CO2 correction factor for correcting measurement data to 15 percent O2 , as follows:

$$X_{CO_2} = \frac{5.9}{F_o} \qquad \text{(Eq. 5)}$$

Where:

XCO2 = CO2 correction factor, percent.

5.9 = 20.9 percent O2 −15 percent O2 , the defined O2 correction value, percent.

(iii) Calculate the NOX and PM gas concentrations adjusted to 15 percent O2 using CO2 as follows:

$$C_{adj} = C_d \frac{X_{CO_2}}{\%CO_2} \qquad \text{(Eq. 6)}$$

Where:

Cadj = Calculated NOX or PM concentration adjusted to 15 percent O2 .

Cd = Measured concentration of NOX or PM, uncorrected.

%CO2 = Measured CO2 concentration, dry basis, percent.

(e) To determine compliance with the NOX mass per unit output emission limitation, convert the concentration of NOX in the engine exhaust using Equation 7 of this section:

$$ER = \frac{C_d \times 1.912 \times 10^{-3} \times Q \times T}{\text{KW-hour}} \qquad \text{(Eq. 7)}$$

Where:

ER = Emission rate in grams per KW-hour.

Cd = Measured NOX concentration in ppm.

1.912x10−3 = Conversion constant for ppm NOX to grams per standard cubic meter at 25 degrees Celsius.

Q = Stack gas volumetric flow rate, in standard cubic meter per hour.

T = Time of test run, in hours.

KW-hour = Brake work of the engine, in KW-hour.

(f) To determine compliance with the PM mass per unit output emission limitation, convert the concentration of PM in the engine exhaust using Equation 8 of this section:

$$ER = \frac{C_{adj} \times Q \times T}{\text{KW-hour}} \qquad \text{(Eq. 8)}$$

Where:

ER = Emission rate in grams per KW-hour.

Cadj = Calculated PM concentration in grams per standard cubic meter.

Q = Stack gas volumetric flow rate, in standard cubic meter per hour.

T = Time of test run, in hours.

KW-hour = Energy output of the engine, in KW.

[71 FR 39172, July 11, 2006, as amended at 76 FR 37971, June 28, 2011]

**Notification, Reports, and Records for Owners and Operators**

**§ 60.4214 What are my notification, reporting, and recordkeeping requirements if I am an owner or operator of a stationary CI internal combustion engine?**

(a) Owners and operators of non-emergency stationary CI ICE that are greater than 2,237 KW (3,000 HP), or have a displacement of greater than or equal to 10 liters per cylinder, or are pre-2007 model year engines that are greater than 130 KW (175 HP) and not certified, must meet the requirements of paragraphs (a)(1) and (2) of this section.

(1) Submit an initial notification as required in § 60.7(a)(1). The notification must include the information in paragraphs (a)(1)(i) through (v) of this section.

(i) Name and address of the owner or operator;

(ii) The address of the affected source;

(iii) Engine information including make, model, engine family, serial number, model year, maximum engine power, and engine displacement;

(iv) Emission control equipment; and

(v) Fuel used.

(2) Keep records of the information in paragraphs (a)(2)(i) through (iv) of this section.

(i) All notifications submitted to comply with this subpart and all documentation supporting any notification.

(ii) Maintenance conducted on the engine.

(iii) If the stationary CI internal combustion is a certified engine, documentation from the manufacturer that the engine is certified to meet the emission standards.

(iv) If the stationary CI internal combustion is not a certified engine, documentation that the engine meets the emission standards.

(b) If the stationary CI internal combustion engine is an emergency stationary internal combustion engine, the owner or operator is not required to submit an initial notification. Starting with the model years in table 5 to this subpart, if the emergency engine does not meet the standards applicable to non-emergency engines in the applicable model year, the owner or operator must keep records of the operation of the engine in emergency and non-emergency service that are recorded through the non-resettable hour meter. The owner must record the time of operation of the engine and the reason the engine was in operation during that time.

(c) If the stationary CI internal combustion engine is equipped with a diesel particulate filter, the owner or operator must keep records of any corrective action taken after the backpressure monitor has notified the owner or operator that the high backpressure limit of the engine is approached.

(d) If you own or operate an emergency stationary CI ICE with a maximum engine power more than 100 HP that operates or is contractually obligated to be available for more than 15 hours per calendar year for the purposes specified in § 60.4211(f)(2)(ii) and (iii) or that operates for the purposes specified in § 60.4211(f)(3)(i), you must submit an annual report according to the requirements in paragraphs (d)(1) through (3) of this section.

(1) The report must contain the following information:

(i) Company name and address where the engine is located.

(ii) Date of the report and beginning and ending dates of the reporting period.

(iii) Engine site rating and model year.

(iv) Latitude and longitude of the engine in decimal degrees reported to the fifth decimal place.

(v) Hours operated for the purposes specified in § 60.4211(f)(2)(ii) and (iii), including the date, start time, and end time for engine operation for the purposes specified in § 60.4211(f)(2)(ii) and (iii).

(vi) Number of hours the engine is contractually obligated to be available for the purposes specified in § 60.4211(f)(2)(ii) and (iii).

(vii) Hours spent for operation for the purposes specified in § 60.4211(f)(3)(i), including the date, start time, and end time for engine operation for the purposes specified in § 60.4211(f)(3)(i). The report must also identify the entity that dispatched the engine and the situation that necessitated the dispatch of the engine.

(2) The first annual report must cover the calendar year 2015 and must be submitted no later than March 31, 2016. Subsequent annual reports for each calendar year must be submitted no later than March 31 of the following calendar year.

(3) The annual report must be submitted electronically using the subpart specific reporting form in the Compliance and Emissions Data Reporting Interface (CEDRI) that is accessed through EPA's Central Data Exchange (CDX) ( www.epa.gov/cdx ). However, if the reporting form specific to this subpart is not available in CEDRI at the time that the report is due, the written report must be submitted to the Administrator at the appropriate address listed in § 60.4.

[71 FR 39172, July 11, 2006, as amended at 78 FR 6696, Jan. 30, 2013]

**Special Requirements**

**§ 60.4215 What requirements must I meet for engines used in Guam, American Samoa, or the Commonwealth of the Northern Mariana Islands?**

(a) Stationary CI ICE with a displacement of less than 30 liters per cylinder that are used in Guam, American Samoa, or the Commonwealth of the Northern Mariana Islands are required to meet the applicable emission standards in §§ 60.4202 and 60.4205.

(b) Stationary CI ICE that are used in Guam, American Samoa, or the Commonwealth of the Northern Mariana Islands are not required to meet the fuel requirements in § 60.4207.

(c) Stationary CI ICE with a displacement of greater than or equal to 30 liters per cylinder that are used in Guam, American Samoa, or the Commonwealth of the Northern Mariana Islands are required to meet the following emission standards:

(1) For engines installed prior to January 1, 2012, limit the emissions of NOX in the stationary CI internal combustion engine exhaust to the following:

(i) 17.0 g/KW-hr (12.7 g/HP-hr) when maximum engine speed is less than 130 rpm;

(ii) $45 \cdot n^{-0.2}$ g/KW-hr ($34 \cdot n^{-0.2}$ g/HP-hr) when maximum engine speed is 130 or more but less than 2,000 rpm, where n is maximum engine speed; and

(iii) 9.8 g/KW-hr (7.3 g/HP-hr) when maximum engine speed is 2,000 rpm or more.

(2) For engines installed on or after January 1, 2012, limit the emissions of NOX in the stationary CI internal combustion engine exhaust to the following:

(i) 14.4 g/KW-hr (10.7 g/HP-hr) when maximum engine speed is less than 130 rpm;

(ii) $44 \cdot n^{-0.23}$ g/KW-hr ($33 \cdot n^{-0.23}$ g/HP-hr) when maximum engine speed is greater than or equal to 130 but less than 2,000 rpm and where n is maximum engine speed; and

(iii) 7.7 g/KW-hr (5.7 g/HP-hr) when maximum engine speed is greater than or equal to 2,000 rpm.

(3) Limit the emissions of PM in the stationary CI internal combustion engine exhaust to 0.40 g/KW-hr (0.30 g/HP-hr).

[71 FR 39172, July 11, 2006, as amended at 76 FR 37971, June 28, 2011]

**§ 60.4216 What requirements must I meet for engines used in Alaska?**

(a) Prior to December 1, 2010, owners and operators of stationary CI ICE with a displacement of less than 30 liters per cylinder located in areas of Alaska not accessible by the FAHS should refer to 40 CFR part 69 to determine the diesel fuel requirements applicable to such engines.

(b) Except as indicated in paragraph (c) of this section, manufacturers, owners and operators of stationary CI ICE with a displacement of less than 10 liters per cylinder located in areas of Alaska not accessible by the FAHS may meet the requirements of this subpart by manufacturing and installing engines meeting the requirements of 40 CFR parts 94 or 1042, as appropriate, rather than the otherwise applicable requirements of 40 CFR parts 89 and 1039, as indicated in sections §§ 60.4201(f) and 60.4202(g) of this subpart.

(c) Manufacturers, owners and operators of stationary CI ICE that are located in areas of Alaska not accessible by the FAHS may choose to meet the applicable emission standards for emergency engines in § 60.4202 and § 60.4205, and not those for non-emergency engines in § 60.4201 and § 60.4204, except that for 2014 model year and later non-emergency CI ICE, the owner or operator of any such engine that was not certified as meeting Tier 4 PM standards, must meet the applicable requirements for PM in § 60.4201 and § 60.4204 or install a PM emission control device that achieves PM emission reductions of 85 percent, or 60 percent for engines with a displacement of greater than or equal to 30 liters per cylinder, compared to engine-out emissions.

(d) The provisions of § 60.4207 do not apply to owners and operators of pre-2014 model year stationary CI ICE subject to this subpart that are located in areas of Alaska not accessible by the FAHS.

(e) The provisions of § 60.4208(a) do not apply to owners and operators of stationary CI ICE subject to this subpart that are located in areas of Alaska not accessible by the FAHS until after December 31, 2009.

(f) The provisions of this section and § 60.4207 do not prevent owners and operators of stationary CI ICE subject to this subpart that are located in areas of Alaska not accessible by the FAHS from using fuels mixed with used lubricating oil, in volumes of up to 1.75 percent of the total fuel. The sulfur content of the used lubricating oil must be less than 200 parts per million. The used lubricating oil must meet the on-specification levels and properties for used oil in 40 CFR 279.11.

[76 FR 37971, June 28, 2011]

**§ 60.4217 What emission standards must I meet if I am an owner or operator of a stationary internal combustion engine using special fuels?**

Owners and operators of stationary CI ICE that do not use diesel fuel may petition the Administrator for approval of alternative emission standards, if they can demonstrate that they use a fuel that is not the fuel on which the manufacturer of the engine certified the engine and that the engine cannot meet the applicable standards required in § 60.4204 or § 60.4205 using such fuels and that use of such fuel is appropriate and reasonably necessary, considering cost, energy, technical feasibility, human health and environmental, and other factors, for the operation of the engine.

[76 FR 37972, June 28, 2011]

**General Provisions**

**§ 60.4218 What parts of the General Provisions apply to me?**

Table 8 to this subpart shows which parts of the General Provisions in §§ 60.1 through 60.19 apply to you.

**Definitions**

**§ 60.4219 What definitions apply to this subpart?**

As used in this subpart, all terms not defined herein shall have the meaning given them in the CAA and in subpart A of this part.

*Certified emissions life* means the period during which the engine is designed to properly function in terms of reliability and fuel consumption, without being remanufactured, specified as a number of hours of operation or calendar years, whichever comes first. The values for certified emissions life for stationary CI ICE with a displacement of less than 10 liters per cylinder are given in 40 CFR 1039.101(g). The values for certified emissions life for stationary CI ICE with a displacement of greater than or equal to 10 liters per cylinder and less than 30 liters per cylinder are given in 40 CFR 94.9(a).

*Combustion turbine* means all equipment, including but not limited to the turbine, the fuel, air, lubrication and exhaust gas systems, control systems (except emissions control equipment), and any ancillary components and sub-components comprising any simple cycle combustion turbine, any regenerative/recuperative cycle combustion turbine, the combustion turbine portion of any cogeneration cycle combustion system, or the combustion turbine portion of any combined cycle steam/electric generating system.

*Compression ignition* means relating to a type of stationary internal combustion engine that is not a spark ignition engine.

*Date of manufacture* means one of the following things:

(1) For freshly manufactured engines and modified engines, date of manufacture means the date the engine is originally produced.

(2) For reconstructed engines, date of manufacture means the date the engine was originally produced, except as specified in paragraph (3) of this definition.

(3) Reconstructed engines are assigned a new date of manufacture if the fixed capital cost of the new and refurbished components exceeds 75 percent of the fixed capital cost of a comparable entirely new facility. An engine that is produced from a previously used engine block does not retain the date of manufacture of the engine in which the engine block was previously used if the engine is produced using all new components except for the engine block. In these cases, the date of manufacture is the date of reconstruction or the date the new engine is produced.

*Diesel fuel* means any liquid obtained from the distillation of petroleum with a boiling point of approximately 150 to 360 degrees Celsius. One commonly used form is number 2 distillate oil.

*Diesel particulate filter* means an emission control technology that reduces PM emissions by trapping the particles in a flow filter substrate and periodically removes the collected particles by either physical action or by oxidizing (burning off) the particles in a process called regeneration.

*Emergency stationary internal combustion engine* means any stationary reciprocating internal combustion engine that meets all of the criteria in paragraphs (1) through (3) of this definition. All emergency stationary ICE must comply with the requirements specified in § 60.4211(f) in order to be considered emergency stationary ICE. If the engine does not comply with the requirements specified in § 60.4211(f), then it is not considered to be an emergency stationary ICE under this subpart.

(1) The stationary ICE is operated to provide electrical power or mechanical work during an emergency situation. Examples include stationary ICE used to produce power for critical networks or equipment (including power supplied to portions of a facility) when electric power from the local utility (or the normal power source, if the facility runs on its own power production) is interrupted, or stationary ICE used to pump water in the case of fire or flood, etc.

(2) The stationary ICE is operated under limited circumstances for situations not included in paragraph (1) of this definition, as specified in § 60.4211(f).

(3) The stationary ICE operates as part of a financial arrangement with another entity in situations not included in paragraph (1) of this definition only as allowed in § 60.4211(f)(2)(ii) or (iii) and § 60.4211(f)(3)(i).

*Engine manufacturer* means the manufacturer of the engine. See the definition of “manufacturer” in this section.

*Fire pump engine* means an emergency stationary internal combustion engine certified to NFPA requirements that is used to provide power to pump water for fire suppression or protection.

*Freshly manufactured engine* means an engine that has not been placed into service. An engine becomes freshly manufactured when it is originally produced.

*Installed* means the engine is placed and secured at the location where it is intended to be operated.

*Manufacturer* has the meaning given in section 216(1) of the Act. In general, this term includes any person who manufactures a stationary engine for sale in the United States or otherwise introduces a new stationary engine into commerce in the United States. This includes importers who import stationary engines for sale or resale.

*Maximum engine power* means maximum engine power as defined in 40 CFR 1039.801.

*Model year* means the calendar year in which an engine is manufactured (see “date of manufacture”), except as follows:

(1) Model year means the annual new model production period of the engine manufacturer in which an engine is manufactured (see “date of manufacture”), if the annual new model production period is different than the calendar year and includes January 1 of the calendar year for which the model year is named. It may not begin before January 2 of the previous calendar year and it must end by December 31 of the named calendar year.

(2) For an engine that is converted to a stationary engine after being placed into service as a nonroad or other non-stationary engine, model year means the calendar year or new model production period in which the engine was manufactured (see “date of manufacture”).

*Other internal combustion engine* means any internal combustion engine, except combustion turbines, which is not a reciprocating internal combustion engine or rotary internal combustion engine.

*Reciprocating internal combustion engine* means any internal combustion engine which uses reciprocating motion to convert heat energy into mechanical work.

*Rotary internal combustion engine* means any internal combustion engine which uses rotary motion to convert heat energy into mechanical work.

*Spark ignition* means relating to a gasoline, natural gas, or liquefied petroleum gas fueled engine or any other type of engine with a spark plug (or other sparking device) and with operating characteristics significantly similar to the theoretical Otto combustion cycle. Spark ignition engines usually use a throttle to regulate intake air flow to control power during normal operation. Dual-fuel engines in which a liquid fuel (typically diesel fuel) is used for CI and gaseous fuel (typically natural gas) is used as the primary fuel at an annual average ratio of less than 2 parts diesel fuel to 100 parts total fuel on an energy equivalent basis are spark ignition engines.

*Stationary internal combustion engine* means any internal combustion engine, except combustion turbines, that converts heat energy into mechanical work and is not mobile. Stationary ICE differ from mobile ICE in that a stationary internal combustion engine is not a nonroad engine as defined at 40 CFR 1068.30 (excluding paragraph (2)(ii) of that definition), and is not used to propel a motor vehicle, aircraft, or a vehicle used solely for competition. Stationary ICE include reciprocating ICE, rotary ICE, and other ICE, except combustion turbines.

*Subpart* means 40 CFR part 60, subpart IIII.

[71 FR 39172, July 11, 2006, as amended at 76 FR 37972, June 28, 2011; 78 FR 6696, Jan. 30, 2013]

**Table 1 to Subpart IIII of Part 60—Emission Standards for Stationary Pre-2007 Model Year Engines With a Displacement of <10 Liters per Cylinder and 2007-2010 Model Year Engines >2,237 KW (3,000 HP) and With a Displacement of <10 Liters per Cylinder**

[As stated in §§ 60.4201(b), 60.4202(b), 60.4204(a), and 60.4205(a), you must comply with the following emission standards]

| Maximum engine power | Emission standards for stationary pre-2007 model year engines with a displacement of <10 liters per cylinder and 2007-2010 model year engines >2,237 KW (3,000 HP) and with a displacement of <10 liters per cylinder in g/KW-hr (g/HP-hr) | | | | |
|---|---|---|---|---|---|
| | NMHC + $NO_X$ | HC | $NO_X$ | CO | PM |
| KW<8 (HP<11) | 10.5 (7.8) | | | 8.0 (6.0) | 1.0 (0.75) |
| 8≤KW<19 (11≤HP<25) | 9.5 (7.1) | | | 6.6 (4.9) | 0.80 (0.60) |
| 19≤KW<37 (25≤HP<50) | 9.5 (7.1) | | | 5.5 (4.1) | 0.80 (0.60) |
| 37≤KW<56 (50≤HP<75) | | | 9.2 (6.9) | | |
| 56≤KW<75 (75≤HP<100) | | | 9.2 (6.9) | | |
| 75≤KW<130 (100≤HP<175) | | | 9.2 (6.9) | | |
| 130≤KW<225 (175≤HP<300) | | 1.3 (1.0) | 9.2 (6.9) | 11.4 (8.5) | 0.54 (0.40) |
| 225≤KW<450 (300≤HP<600) | | 1.3 (1.0) | 9.2 (6.9) | 11.4 (8.5) | 0.54 (0.40) |
| 450≤KW≤560 (600≤HP≤750) | | 1.3 (1.0) | 9.2 (6.9) | 11.4 (8.5) | 0.54 (0.40) |
| KW>560 (HP>750) | | 1.3 (1.0) | 9.2 (6.9) | 11.4 (8.5) | 0.54 (0.40) |

**Table 2 to Subpart IIII of Part 60—Emission Standards for 2008 Model Year and Later Emergency Stationary CI ICE <37 KW (50 HP) With a Displacement of <10 Liters per Cylinder**

[As stated in § 60.4202(a)(1), you must comply with the following emission standards]

| Engine power | Emission standards for 2008 model year and later emergency stationary CI ICE <37 KW (50 HP) with a displacement of <10 liters per cylinder in g/KW-hr (g/HP-hr) | | | |
|---|---|---|---|---|
| | Model year(s) | $NO_X$+ NMHC | CO | PM |
| KW<8 (HP<11) | 2008+ | 7.5 (5.6) | 8.0 (6.0) | 0.40 (0.30) |
| 8≤KW<19 (11≤HP<25) | 2008+ | 7.5 (5.6) | 6.6 (4.9) | 0.40 (0.30) |
| 19≤KW<37 (25≤HP<50) | 2008+ | 7.5 (5.6) | 5.5 (4.1) | 0.30 (0.22) |

**Table 3 to Subpart IIII of Part 60—Certification Requirements for Stationary Fire Pump Engines**

As stated in § 60.4202(d), you must certify new stationary fire pump engines beginning with the following model years:

| Engine power | Starting model year engine manufacturers must certify new stationary fire pump engines according to § 60.4202(d)[1] |
|---|---|
| KW<75 (HP<100) | 2011 |
| 75≤KW<130 (100≤HP<175) | 2010 |
| 130≤KW≤560 (175≤HP≤750) | 2009 |
| KW>560 (HP>750) | 2008 |

[1]Manufacturers of fire pump stationary CI ICE with a maximum engine power greater than or equal to 37 kW (50 HP) and less than 450 KW (600 HP) and a rated speed of greater than 2,650 revolutions per minute (rpm) are not required to certify such engines until three model years following the model year indicated in this Table 3 for engines in the applicable engine power category.

[71 FR 39172, July 11, 2006, as amended at 76 FR 37972, June 28, 2011]

**Table 4 to Subpart IIII of Part 60—Emission Standards for Stationary Fire Pump Engines**

[As stated in §§ 60.4202(d) and 60.4205(c), you must comply with the following emission standards for stationary fire pump engines]

| Maximum engine power | Model year(s) | NMHC + $NO_X$ | CO | PM |
|---|---|---|---|---|
| KW<8 (HP<11) | 2010 and earlier | 10.5 (7.8) | 8.0 (6.0) | 1.0 (0.75) |
| | 2011+ | 7.5 (5.6) | | 0.40 (0.30) |
| 8≤KW<19 (11≤HP<25) | 2010 and earlier | 9.5 (7.1) | 6.6 (4.9) | 0.80 (0.60) |
| | 2011+ | 7.5 (5.6) | | 0.40 (0.30) |

| Maximum engine power | Model year(s) | NMHC + $NO_X$ | CO | PM |
|---|---|---|---|---|
| 19≤KW<37 (25≤HP<50) | 2010 and earlier | 9.5 (7.1) | 5.5 (4.1) | 0.80 (0.60) |
| | 2011+ | 7.5 (5.6) | | 0.30 (0.22) |
| 37≤KW<56 (50≤HP<75) | 2010 and earlier | 10.5 (7.8) | 5.0 (3.7) | 0.80 (0.60) |
| | 2011+ [1] | 4.7 (3.5) | | 0.40 (0.30) |
| 56≤KW<75 (75≤HP<100) | 2010 and earlier | 10.5 (7.8) | 5.0 (3.7) | 0.80 (0.60) |
| | 2011+ [1] | 4.7 (3.5) | | 0.40 (0.30) |
| 75≤KW<130 (100≤HP<175) | 2009 and earlier | 10.5 (7.8) | 5.0 (3.7) | 0.80 (0.60) |
| | 2010+ [2] | 4.0 (3.0) | | 0.30 (0.22) |
| 130≤KW<225 (175≤HP<300) | 2008 and earlier | 10.5 (7.8) | 3.5 (2.6) | 0.54 (0.40) |
| | 2009+ [3] | 4.0 (3.0) | | 0.20 (0.15) |
| 225≤KW<450 (300≤HP<600) | 2008 and earlier | 10.5 (7.8) | 3.5 (2.6) | 0.54 (0.40) |
| | 2009+ [3] | 4.0 (3.0) | | 0.20 (0.15) |
| 450≤KW≤560 (600≤HP≤750) | 2008 and earlier | 10.5 (7.8) | 3.5 (2.6) | 0.54 (0.40) |
| | 2009+ | 4.0 (3.0) | | 0.20 (0.15) |
| KW>560 (HP>750) | 2007 and earlier | 10.5 (7.8) | 3.5 (2.6) | 0.54 (0.40) |
| | 2008+ | 6.4 (4.8) | | 0.20 (0.15) |

[1] For model years 2011-2013, manufacturers, owners and operators of fire pump stationary CI ICE in this engine power category with a rated speed of greater than 2,650 revolutions per minute (rpm) may comply with the emission limitations for 2010 model year engines.

[2] For model years 2010-2012, manufacturers, owners and operators of fire pump stationary CI ICE in this engine power category with a rated speed of greater than 2,650 rpm may comply with the emission limitations for 2009 model year engines.

[3] In model years 2009-2011, manufacturers of fire pump stationary CI ICE in this engine power category with a rated speed of greater than 2,650 rpm may comply with the emission limitations for 2008 model year engines.

**Table 5 to Subpart IIII of Part 60—Labeling and Recordkeeping Requirements for New Stationary Emergency Engines**

[You must comply with the labeling requirements in § 60.4210(f) and the recordkeeping requirements in § 60.4214(b) for new emergency stationary CI ICE beginning in the following model years:]

| Engine power | Starting model year |
|---|---|
| 19≤KW<56 (25≤HP<75) | 2013 |
| 56≤KW<130 (75≤HP<175) | 2012 |
| KW≥130 (HP≥175) | 2011 |

**Table 6 to Subpart IIII of Part 60—Optional 3-Mode Test Cycle for Stationary Fire Pump Engines**

[As stated in § 60.4210(g), manufacturers of fire pump engines may use the following test cycle for testing fire pump engines:]

| Mode No. | Engine speed [1] | Torque (percent) [2] | Weighting factors |
|---|---|---|---|
| 1 | Rated | 100 | 0.30 |
| 2 | Rated | 75 | 0.50 |
| 3 | Rated | 50 | 0.20 |

[1] Engine speed: ±2 percent of point.

[2] Torque: NFPA certified nameplate HP for 100 percent point. All points should be ±2 percent of engine percent load value.

**Table 7 to Subpart IIII of Part 60—Requirements for Performance Tests for Stationary CI ICE With a Displacement of ≥30 Liters per Cylinder**

[As stated in § 60.4213, you must comply with the following requirements for performance tests for stationary CI ICE with a displacement of ≥30 liters per cylinder:]

| For each | Complying with the requirement to | You must | Using | According to the following requirements |
|---|---|---|---|---|
| 1. Stationary CI internal combustion engine with a displacement of ≥30 liters per cylinder | a. Reduce $NO_X$emissions by 90 percent or more | i. Select the sampling port location and the number of traverse points; | (1) Method 1 or 1A of 40 CFR part 60, appendix A | (a) Sampling sites must be located at the inlet and outlet of the control device. |
| | | ii. Measure $O_2$at the inlet and outlet of the control device; | (2) Method 3, 3A, or 3B of 40 CFR part 60, appendix A | (b) Measurements to determine $O_2$concentration must be made at the same time as the measurements for $NO_X$concentration. |
| | | iii. If necessary, measure moisture content at the inlet and outlet of the control device; and, | (3) Method 4 of 40 CFR part 60, appendix A, Method 320 of 40 CFR part 63, appendix A, or ASTM D 6348-03 (incorporated by reference, see § 60.17) | (c) Measurements to determine moisture content must be made at the same time as the measurements for $NO_X$concentration. |
| | | iv. Measure $NO_X$at the inlet and outlet of the control device | (4) Method 7E of 40 CFR part 60, appendix A, Method 320 of 40 CFR part 63, appendix A, or ASTM D 6348-03 (incorporated by reference, see § 60.17) | (d) $NO_X$concentration must be at 15 percent $O_2$, dry basis. Results of this test consist of the average of the three 1-hour or longer runs. |

| For each | Complying with the requirement to | You must | Using | According to the following requirements |
|---|---|---|---|---|
| | b. Limit the concentration of $NO_X$ in the stationary CI internal combustion engine exhaust. | i. Select the sampling port location and the number of traverse points; | (1) Method 1 or 1A of 40 CFR part 60, appendix A | (a) If using a control device, the sampling site must be located at the outlet of the control device. |
| | | ii. Determine the $O_2$ concentration of the stationary internal combustion engine exhaust at the sampling port location; and, | (2) Method 3, 3A, or 3B of 40 CFR part 60, appendix A | (b) Measurements to determine $O_2$ concentration must be made at the same time as the measurement for $NO_X$ concentration. |
| | | iii. If necessary, measure moisture content of the stationary internal combustion engine exhaust at the sampling port location; and, | (3) Method 4 of 40 CFR part 60, appendix A, Method 320 of 40 CFR part 63, appendix A, or ASTM D 6348-03 (incorporated by reference, see § 60.17) | (c) Measurements to determine moisture content must be made at the same time as the measurement for $NO_X$ concentration. |
| | | iv. Measure $NO_X$ at the exhaust of the stationary internal combustion engine | (4) Method 7E of 40 CFR part 60, appendix A, Method 320 of 40 CFR part 63, appendix A, or ASTM D 6348-03 (incorporated by reference, see § 60.17) | (d) $NO_X$ concentration must be at 15 percent $O_2$, dry basis. Results of this test consist of the average of the three 1-hour or longer runs. |
| | c. Reduce PM emissions by 60 percent or more | i. Select the sampling port location and the number of traverse points; | (1) Method 1 or 1A of 40 CFR part 60, appendix A | (a) Sampling sites must be located at the inlet and outlet of the control device. |
| | | ii. Measure $O_2$ at the inlet and outlet of the control device; | (2) Method 3, 3A, or 3B of 40 CFR part 60, appendix A | (b) Measurements to determine $O_2$ concentration must be made at the same time as the measurements for PM concentration. |
| | | iii. If necessary, measure moisture content at the inlet and outlet of the control device; and | (3) Method 4 of 40 CFR part 60, appendix A | (c) Measurements to determine and moisture content must be made at the same time as the measurements for PM concentration. |
| | | iv. Measure PM at the inlet and outlet of the control device | (4) Method 5 of 40 CFR part 60, appendix A | (d) PM concentration must be at 15 percent $O_2$, dry basis. Results of this test consist of the average of the three 1-hour or longer runs. |
| | d. Limit the concentration of PM in the stationary CI internal combustion engine exhaust | i. Select the sampling port location and the number of traverse points; | (1) Method 1 or 1A of 40 CFR part 60, appendix A | (a) If using a control device, the sampling site must be located at the outlet of the control device. |

| For each | Complying with the requirement to | You must | Using | According to the following requirements |
|---|---|---|---|---|
| | | ii. Determine the $O_2$concentration of the stationary internal combustion engine exhaust at the sampling port location; and | (2) Method 3, 3A, or 3B of 40 CFR part 60, appendix A | (b) Measurements to determine $O_2$concentration must be made at the same time as the measurements for PM concentration. |
| | | iii. If necessary, measure moisture content of the stationary internal combustion engine exhaust at the sampling port location; and | (3) Method 4 of 40 CFR part 60, appendix A | (c) Measurements to determine moisture content must be made at the same time as the measurements for PM concentration. |
| | | iv. Measure PM at the exhaust of the stationary internal combustion engine | (4) Method 5 of 40 CFR part 60, appendix A | (d) PM concentration must be at 15 percent $O_2$, dry basis. Results of this test consist of the average of the three 1-hour or longer runs. |

**Table 8 to Subpart IIII of Part 60—Applicability of General Provisions to Subpart IIII**

[As stated in § 60.4218, you must comply with the following applicable General Provisions:]

| General Provisions citation | Subject of citation | Applies to subpart | Explanation |
|---|---|---|---|
| § 60.1 | General applicability of the General Provisions | Yes | |
| § 60.2 | Definitions | Yes | Additional terms defined in § 60.4219. |
| § 60.3 | Units and abbreviations | Yes | |
| § 60.4 | Address | Yes | |
| § 60.5 | Determination of construction or modification | Yes | |
| § 60.6 | Review of plans | Yes | |
| § 60.7 | Notification and Recordkeeping | Yes | Except that § 60.7 only applies as specified in § 60.4214(a). |
| § 60.8 | Performance tests | Yes | Except that § 60.8 only applies to stationary CI ICE with a displacement of (≥30 liters per cylinder and engines that are not certified. |
| § 60.9 | Availability of information | Yes | |
| § 60.10 | State Authority | Yes | |
| § 60.11 | Compliance with standards and maintenance requirements | No | Requirements are specified in subpart IIII. |
| § 60.12 | Circumvention | Yes | |
| § 60.13 | Monitoring requirements | Yes | Except that § 60.13 only applies to stationary CI ICE with a displacement of (≥30 liters per cylinder. |
| § 60.14 | Modification | Yes | |
| § 60.15 | Reconstruction | Yes | |
| § 60.16 | Priority list | Yes | |

| General Provisions citation | Subject of citation | Applies to subpart | Explanation |
|---|---|---|---|
| § 60.17 | Incorporations by reference | Yes | |
| § 60.18 | General control device requirements | No | |
| § 60.19 | General notification and reporting requirements | Yes | |

**Attachment O**
**To Part 70 Operating Permit Renewal No. T129-25424-00003**

[Downloaded from the eCFR on May 13, 2013]

**Electronic Code of Federal Regulations**

**Title 40: Protection of Environment**

**Part 63, Subpart ZZZZ—National Emissions Standards for Hazardous Air Pollutants for Stationary Reciprocating Internal Combustion Engines**

SOURCE: 69 FR 33506, June 15, 2004, unless otherwise noted.

**What This Subpart Covers**

**§ 63.6580 What is the purpose of subpart ZZZZ?**

Subpart ZZZZ establishes national emission limitations and operating limitations for hazardous air pollutants (HAP) emitted from stationary reciprocating internal combustion engines (RICE) located at major and area sources of HAP emissions. This subpart also establishes requirements to demonstrate initial and continuous compliance with the emission limitations and operating limitations.

[73 FR 3603, Jan. 18, 2008]

**§ 63.6585 Am I subject to this subpart?**

You are subject to this subpart if you own or operate a stationary RICE at a major or area source of HAP emissions, except if the stationary RICE is being tested at a stationary RICE test cell/stand.

(a) A stationary RICE is any internal combustion engine which uses reciprocating motion to convert heat energy into mechanical work and which is not mobile. Stationary RICE differ from mobile RICE in that a stationary RICE is not a non-road engine as defined at 40 CFR 1068.30, and is not used to propel a motor vehicle or a vehicle used solely for competition.

(b) A major source of HAP emissions is a plant site that emits or has the potential to emit any single HAP at a rate of 10 tons (9.07 megagrams) or more per year or any combination of HAP at a rate of 25 tons (22.68 megagrams) or more per year, except that for oil and gas production facilities, a major source of HAP emissions is determined for each surface site.

(c) An area source of HAP emissions is a source that is not a major source.

(d) If you are an owner or operator of an area source subject to this subpart, your status as an entity subject to a standard or other requirements under this subpart does not subject you to the obligation to obtain a permit under 40 CFR part 70 or 71, provided you are not required to obtain a permit under 40 CFR 70.3(a) or 40 CFR 71.3(a) for a reason other than your status as an area source under this subpart. Notwithstanding the previous sentence, you must continue to comply with the provisions of this subpart as applicable.

(e) If you are an owner or operator of a stationary RICE used for national security purposes, you may be eligible to request an exemption from the requirements of this subpart as described in 40 CFR part 1068, subpart C.

(f) The emergency stationary RICE listed in paragraphs (f)(1) through (3) of this section are not subject to this subpart. The stationary RICE must meet the definition of an emergency stationary RICE in § 63.6675, which includes operating according to the provisions specified in § 63.6640(f).

(1) Existing residential emergency stationary RICE located at an area source of HAP emissions that do not operate or are not contractually obligated to be available for more than 15 hours per calendar year for the purposes specified in § 63.6640(f)(2)(ii) and (iii) and that do not operate for the purpose specified in § 63.6640(f)(4)(ii).

(2) Existing commercial emergency stationary RICE located at an area source of HAP emissions that do not operate or are not contractually obligated to be available for more than 15 hours per calendar year for the purposes specified in § 63.6640(f)(2)(ii) and (iii) and that do not operate for the purpose specified in § 63.6640(f)(4)(ii).

(3) Existing institutional emergency stationary RICE located at an area source of HAP emissions that do not operate or are not contractually obligated to be available for more than 15 hours per calendar year for the purposes specified in § 63.6640(f)(2)(ii) and (iii) and that do not operate for the purpose specified in § 63.6640(f)(4)(ii).

[69 FR 33506, June 15, 2004, as amended at 73 FR 3603, Jan. 18, 2008; 78 FR 6700, Jan. 30, 2013]

**§ 63.6590 What parts of my plant does this subpart cover?**

This subpart applies to each affected source.

(a) *Affected source.* An affected source is any existing, new, or reconstructed stationary RICE located at a major or area source of HAP emissions, excluding stationary RICE being tested at a stationary RICE test cell/stand.

(1) *Existing stationary RICE.*

(i) For stationary RICE with a site rating of more than 500 brake horsepower (HP) located at a major source of HAP emissions, a stationary RICE is existing if you commenced construction or reconstruction of the stationary RICE before December 19, 2002.

(ii) For stationary RICE with a site rating of less than or equal to 500 brake HP located at a major source of HAP emissions, a stationary RICE is existing if you commenced construction or reconstruction of the stationary RICE before June 12, 2006.

(iii) For stationary RICE located at an area source of HAP emissions, a stationary RICE is existing if you commenced construction or reconstruction of the stationary RICE before June 12, 2006.

(iv) A change in ownership of an existing stationary RICE does not make that stationary RICE a new or reconstructed stationary RICE.

(2) *New stationary RICE.* (i) A stationary RICE with a site rating of more than 500 brake HP located at a major source of HAP emissions is new if you commenced construction of the stationary RICE on or after December 19, 2002.

(ii) A stationary RICE with a site rating of equal to or less than 500 brake HP located at a major source of HAP emissions is new if you commenced construction of the stationary RICE on or after June 12, 2006.

(iii) A stationary RICE located at an area source of HAP emissions is new if you commenced construction of the stationary RICE on or after June 12, 2006.

(3) *Reconstructed stationary RICE.* (i) A stationary RICE with a site rating of more than 500 brake HP located at a major source of HAP emissions is reconstructed if you meet the definition of reconstruction in § 63.2 and reconstruction is commenced on or after December 19, 2002.

(ii) A stationary RICE with a site rating of equal to or less than 500 brake HP located at a major source of HAP emissions is reconstructed if you meet the definition of reconstruction in § 63.2 and reconstruction is commenced on or after June 12, 2006.

(iii) A stationary RICE located at an area source of HAP emissions is reconstructed if you meet the definition of reconstruction in § 63.2 and reconstruction is commenced on or after June 12, 2006.

(b) *Stationary RICE subject to limited requirements.* (1) An affected source which meets either of the criteria in paragraphs (b)(1)(i) through (ii) of this section does not have to meet the requirements of this subpart and of subpart A of this part except for the initial notification requirements of § 63.6645(f).

(i) The stationary RICE is a new or reconstructed emergency stationary RICE with a site rating of more than 500 brake HP located at a major source of HAP emissions that does not operate or is not contractually obligated to be available for more than 15 hours per calendar year for the purposes specified in § 63.6640(f)(2)(ii) and (iii).

(ii) The stationary RICE is a new or reconstructed limited use stationary RICE with a site rating of more than 500 brake HP located at a major source of HAP emissions.

(2) A new or reconstructed stationary RICE with a site rating of more than 500 brake HP located at a major source of HAP emissions which combusts landfill or digester gas equivalent to 10 percent or more of the gross heat input on an annual basis must meet the initial notification requirements of § 63.6645(f) and the requirements of §§ 63.6625(c), 63.6650(g), and 63.6655(c). These stationary RICE do not have to meet the emission limitations and operating limitations of this subpart.

(3) The following stationary RICE do not have to meet the requirements of this subpart and of subpart A of this part, including initial notification requirements:

(i) Existing spark ignition 2 stroke lean burn (2SLB) stationary RICE with a site rating of more than 500 brake HP located at a major source of HAP emissions;

(ii) Existing spark ignition 4 stroke lean burn (4SLB) stationary RICE with a site rating of more than 500 brake HP located at a major source of HAP emissions;

(iii) Existing emergency stationary RICE with a site rating of more than 500 brake HP located at a major source of HAP emissions that does not operate or is not contractually obligated to be available for more than 15 hours per calendar year for the purposes specified in § 63.6640(f)(2)(ii) and (iii).

(iv) Existing limited use stationary RICE with a site rating of more than 500 brake HP located at a major source of HAP emissions;

(v) Existing stationary RICE with a site rating of more than 500 brake HP located at a major source of HAP emissions that combusts landfill gas or digester gas equivalent to 10 percent or more of the gross heat input on an annual basis;

(c) *Stationary RICE subject to Regulations under 40 CFR Part 60.* An affected source that meets any of the criteria in paragraphs (c)(1) through (7) of this section must meet the requirements of this part by meeting the requirements of 40 CFR part 60 subpart IIII, for compression ignition engines or 40 CFR part 60 subpart JJJJ, for spark ignition engines. No further requirements apply for such engines under this part.

(1) A new or reconstructed stationary RICE located at an area source;

(2) A new or reconstructed 2SLB stationary RICE with a site rating of less than or equal to 500 brake HP located at a major source of HAP emissions;

(3) A new or reconstructed 4SLB stationary RICE with a site rating of less than 250 brake HP located at a major source of HAP emissions;

(4) A new or reconstructed spark ignition 4 stroke rich burn (4SRB) stationary RICE with a site rating of less than or equal to 500 brake HP located at a major source of HAP emissions;

(5) A new or reconstructed stationary RICE with a site rating of less than or equal to 500 brake HP located at a major source of HAP emissions which combusts landfill or digester gas equivalent to 10 percent or more of the gross heat input on an annual basis;

(6) A new or reconstructed emergency or limited use stationary RICE with a site rating of less than or equal to 500 brake HP located at a major source of HAP emissions;

(7) A new or reconstructed compression ignition (CI) stationary RICE with a site rating of less than or equal to 500 brake HP located at a major source of HAP emissions.

[69 FR 33506, June 15, 2004, as amended at 73 FR 3604, Jan. 18, 2008; 75 FR 9674, Mar. 3, 2010; 75 FR 37733, June 30, 2010; 75 FR 51588, Aug. 20, 2010; 78 FR 6700, Jan. 30, 2013]

**§ 63.6595 When do I have to comply with this subpart?**

(a) *Affected sources.* (1) If you have an existing stationary RICE, excluding existing non-emergency CI stationary RICE, with a site rating of more than 500 brake HP located at a major source of HAP emissions, you must comply with the applicable emission limitations, operating limitations and other requirements no later than June 15, 2007. If you have an existing non-emergency CI stationary RICE with a site rating of more than 500 brake HP located at a major source of HAP emissions, an existing stationary CI RICE with a site rating of less than or equal to 500 brake HP located at a major source of HAP emissions, or an existing stationary CI RICE located at an area source of HAP emissions, you must comply with the applicable emission limitations, operating limitations, and other requirements no later than May 3, 2013. If you have an existing stationary SI RICE with a site rating of less than or equal to 500 brake HP located at a major source of HAP emissions, or an existing stationary SI RICE located at an area source of HAP emissions, you must comply with the applicable emission limitations, operating limitations, and other requirements no later than October 19, 2013.

(2) If you start up your new or reconstructed stationary RICE with a site rating of more than 500 brake HP located at a major source of HAP emissions before August 16, 2004, you must comply with the applicable emission limitations and operating limitations in this subpart no later than August 16, 2004.

(3) If you start up your new or reconstructed stationary RICE with a site rating of more than 500 brake HP located at a major source of HAP emissions after August 16, 2004, you must comply with the applicable emission limitations and operating limitations in this subpart upon startup of your affected source.

(4) If you start up your new or reconstructed stationary RICE with a site rating of less than or equal to 500 brake HP located at a major source of HAP emissions before January 18, 2008, you must comply with the applicable emission limitations and operating limitations in this subpart no later than January 18, 2008.

(5) If you start up your new or reconstructed stationary RICE with a site rating of less than or equal to 500 brake HP located at a major source of HAP emissions after January 18, 2008, you must comply with the applicable emission limitations and operating limitations in this subpart upon startup of your affected source.

(6) If you start up your new or reconstructed stationary RICE located at an area source of HAP emissions before January 18, 2008, you must comply with the applicable emission limitations and operating limitations in this subpart no later than January 18, 2008.

(7) If you start up your new or reconstructed stationary RICE located at an area source of HAP emissions after January 18, 2008, you must comply with the applicable emission limitations and operating limitations in this subpart upon startup of your affected source.

(b) *Area sources that become major sources.* If you have an area source that increases its emissions or its potential to emit such that it becomes a major source of HAP, the compliance dates in paragraphs (b)(1) and (2) of this section apply to you.

(1) Any stationary RICE for which construction or reconstruction is commenced after the date when your area source becomes a major source of HAP must be in compliance with this subpart upon startup of your affected source.

(2) Any stationary RICE for which construction or reconstruction is commenced before your area source becomes a major source of HAP must be in compliance with the provisions of this subpart that are applicable to RICE located at major sources within 3 years after your area source becomes a major source of HAP.

(c) If you own or operate an affected source, you must meet the applicable notification requirements in § 63.6645 and in 40 CFR part 63, subpart A.

[69 FR 33506, June 15, 2004, as amended at 73 FR 3604, Jan. 18, 2008; 75 FR 9675, Mar. 3, 2010; 75 FR 51589, Aug. 20, 2010; 78 FR 6701, Jan. 30, 2013]

**Emission and Operating Limitations**

**§ 63.6600 What emission limitations and operating limitations must I meet if I own or operate a stationary RICE with a site rating of more than 500 brake HP located at a major source of HAP emissions?**

Compliance with the numerical emission limitations established in this subpart is based on the results of testing the average of three 1-hour runs using the testing requirements and procedures in § 63.6620 and Table 4 to this subpart.

(a) If you own or operate an existing, new, or reconstructed spark ignition 4SRB stationary RICE with a site rating of more than 500 brake HP located at a major source of HAP emissions, you must comply with the emission limitations in Table 1a to this subpart and the operating limitations in Table 1b to this subpart which apply to you.

(b) If you own or operate a new or reconstructed 2SLB stationary RICE with a site rating of more than 500 brake HP located at major source of HAP emissions, a new or reconstructed 4SLB stationary RICE with a site rating of more than 500 brake HP located at major source of HAP emissions, or a new or reconstructed CI stationary RICE with a site rating of more than 500 brake HP located at a major source of HAP emissions, you must comply with the emission limitations in Table 2a to this subpart and the operating limitations in Table 2b to this subpart which apply to you.

(c) If you own or operate any of the following stationary RICE with a site rating of more than 500 brake HP located at a major source of HAP emissions, you do not need to comply with the emission limitations in Tables 1a, 2a, 2c, and 2d to this subpart or operating limitations in Tables 1b and 2b to this subpart: an existing 2SLB stationary RICE; an existing 4SLB stationary RICE; a stationary RICE that combusts landfill gas or digester gas equivalent to 10 percent or more of the gross heat input on an annual basis; an emergency stationary RICE; or a limited use stationary RICE.

(d) If you own or operate an existing non-emergency stationary CI RICE with a site rating of more than 500 brake HP located at a major source of HAP emissions, you must comply with the emission limitations in Table 2c to this subpart and the operating limitations in Table 2b to this subpart which apply to you.

[73 FR 3605, Jan. 18, 2008, as amended at 75 FR 9675, Mar. 3, 2010]

**§ 63.6601 What emission limitations must I meet if I own or operate a new or reconstructed 4SLB stationary RICE with a site rating of greater than or equal to 250 brake HP and less than or equal to 500 brake HP located at a major source of HAP emissions?**

Compliance with the numerical emission limitations established in this subpart is based on the results of testing the average of three 1-hour runs using the testing requirements and procedures in § 63.6620 and Table 4 to this subpart. If you own or operate a new or reconstructed 4SLB stationary RICE with a site rating of greater than or equal to 250 and less than or equal to 500 brake HP located at major source of HAP emissions manufactured on or after January 1, 2008, you must comply with the emission limitations in Table 2a to this subpart and the operating limitations in Table 2b to this subpart which apply to you.

[73 FR 3605, Jan. 18, 2008, as amended at 75 FR 9675, Mar. 3, 2010; 75 FR 51589, Aug. 20, 2010]

**§ 63.6602 What emission limitations and other requirements must I meet if I own or operate an existing stationary RICE with a site rating of equal to or less than 500 brake HP located at a major source of HAP emissions?**

If you own or operate an existing stationary RICE with a site rating of equal to or less than 500 brake HP located at a major source of HAP emissions, you must comply with the emission limitations and other requirements in Table 2c to this subpart which apply to you. Compliance with the numerical emission limitations established in this subpart is

based on the results of testing the average of three 1-hour runs using the testing requirements and procedures in § 63.6620 and Table 4 to this subpart.

[78 FR 6701, Jan. 30, 2013]

**§ 63.6603 What emission limitations, operating limitations, and other requirements must I meet if I own or operate an existing stationary RICE located at an area source of HAP emissions?**

Compliance with the numerical emission limitations established in this subpart is based on the results of testing the average of three 1-hour runs using the testing requirements and procedures in § 63.6620 and Table 4 to this subpart.

(a) If you own or operate an existing stationary RICE located at an area source of HAP emissions, you must comply with the requirements in Table 2d to this subpart and the operating limitations in Table 2b to this subpart that apply to you.

(b) If you own or operate an existing stationary non-emergency CI RICE with a site rating of more than 300 HP located at an area source of HAP that meets either paragraph (b)(1) or (2) of this section, you do not have to meet the numerical CO emission limitations specified in Table 2d of this subpart. Existing stationary non-emergency CI RICE with a site rating of more than 300 HP located at an area source of HAP that meet either paragraph (b)(1) or (2) of this section must meet the management practices that are shown for stationary non-emergency CI RICE with a site rating of less than or equal to 300 HP in Table 2d of this subpart.

(1) The area source is located in an area of Alaska that is not accessible by the Federal Aid Highway System (FAHS).

(2) The stationary RICE is located at an area source that meets paragraphs (b)(2)(i), (ii), and (iii) of this section.

(i) The only connection to the FAHS is through the Alaska Marine Highway System (AMHS), or the stationary RICE operation is within an isolated grid in Alaska that is not connected to the statewide electrical grid referred to as the Alaska Railbelt Grid.

(ii) At least 10 percent of the power generated by the stationary RICE on an annual basis is used for residential purposes.

(iii) The generating capacity of the area source is less than 12 megawatts, or the stationary RICE is used exclusively for backup power for renewable energy.

(c) If you own or operate an existing stationary non-emergency CI RICE with a site rating of more than 300 HP located on an offshore vessel that is an area source of HAP and is a nonroad vehicle that is an Outer Continental Shelf (OCS) source as defined in 40 CFR 55.2, you do not have to meet the numerical CO emission limitations specified in Table 2d of this subpart. You must meet all of the following management practices:

(1) Change oil every 1,000 hours of operation or annually, whichever comes first. Sources have the option to utilize an oil analysis program as described in § 63.6625(i) in order to extend the specified oil change requirement.

(2) Inspect and clean air filters every 750 hours of operation or annually, whichever comes first, and replace as necessary.

(3) Inspect fuel filters and belts, if installed, every 750 hours of operation or annually, whichever comes first, and replace as necessary.

(4) Inspect all flexible hoses every 1,000 hours of operation or annually, whichever comes first, and replace as necessary.

(d) If you own or operate an existing non-emergency CI RICE with a site rating of more than 300 HP located at an area source of HAP emissions that is certified to the Tier 1 or Tier 2 emission standards in Table 1 of 40 CFR 89.112 and that is subject to an enforceable state or local standard that requires the engine to be replaced no later than June

1, 2018, you may until January 1, 2015, or 12 years after the installation date of the engine (whichever is later), but not later than June 1, 2018, choose to comply with the management practices that are shown for stationary non-emergency CI RICE with a site rating of less than or equal to 300 HP in Table 2d of this subpart instead of the applicable emission limitations in Table 2d, operating limitations in Table 2b, and crankcase ventilation system requirements in § 63.6625(g). You must comply with the emission limitations in Table 2d and operating limitations in Table 2b that apply for non-emergency CI RICE with a site rating of more than 300 HP located at an area source of HAP emissions by January 1, 2015, or 12 years after the installation date of the engine (whichever is later), but not later than June 1, 2018. You must also comply with the crankcase ventilation system requirements in § 63.6625(g) by January 1, 2015, or 12 years after the installation date of the engine (whichever is later), but not later than June 1, 2018.

(e) If you own or operate an existing non-emergency CI RICE with a site rating of more than 300 HP located at an area source of HAP emissions that is certified to the Tier 3 (Tier 2 for engines above 560 kilowatt (kW)) emission standards in Table 1 of 40 CFR 89.112, you may comply with the requirements under this part by meeting the requirements for Tier 3 engines (Tier 2 for engines above 560 kW) in 40 CFR part 60 subpart IIII instead of the emission limitations and other requirements that would otherwise apply under this part for existing non-emergency CI RICE with a site rating of more than 300 HP located at an area source of HAP emissions.

(f) An existing non-emergency SI 4SLB and 4SRB stationary RICE with a site rating of more than 500 HP located at area sources of HAP must meet the definition of remote stationary RICE in § 63.6675 on the initial compliance date for the engine, October 19, 2013, in order to be considered a remote stationary RICE under this subpart. Owners and operators of existing non-emergency SI 4SLB and 4SRB stationary RICE with a site rating of more than 500 HP located at area sources of HAP that meet the definition of remote stationary RICE in § 63.6675 of this subpart as of October 19, 2013 must evaluate the status of their stationary RICE every 12 months. Owners and operators must keep records of the initial and annual evaluation of the status of the engine. If the evaluation indicates that the stationary RICE no longer meets the definition of remote stationary RICE in § 63.6675 of this subpart, the owner or operator must comply with all of the requirements for existing non-emergency SI 4SLB and 4SRB stationary RICE with a site rating of more than 500 HP located at area sources of HAP that are not remote stationary RICE within 1 year of the evaluation.

[75 FR 9675, Mar. 3, 2010, as amended at 75 FR 51589, Aug. 20, 2010; 76 FR 12866, Mar. 9, 2011; 78 FR 6701, Jan. 30, 2013]

**§ 63.6604 What fuel requirements must I meet if I own or operate a stationary CI RICE?**

(a) If you own or operate an existing non-emergency, non-black start CI stationary RICE with a site rating of more than 300 brake HP with a displacement of less than 30 liters per cylinder that uses diesel fuel, you must use diesel fuel that meets the requirements in 40 CFR 80.510(b) for nonroad diesel fuel.

(b) Beginning January 1, 2015, if you own or operate an existing emergency CI stationary RICE with a site rating of more than 100 brake HP and a displacement of less than 30 liters per cylinder that uses diesel fuel and operates or is contractually obligated to be available for more than 15 hours per calendar year for the purposes specified in § 63.6640(f)(2)(ii) and (iii) or that operates for the purpose specified in § 63.6640(f)(4)(ii), you must use diesel fuel that meets the requirements in 40 CFR 80.510(b) for nonroad diesel fuel, except that any existing diesel fuel purchased (or otherwise obtained) prior to January 1, 2015, may be used until depleted.

(c) Beginning January 1, 2015, if you own or operate a new emergency CI stationary RICE with a site rating of more than 500 brake HP and a displacement of less than 30 liters per cylinder located at a major source of HAP that uses diesel fuel and operates or is contractually obligated to be available for more than 15 hours per calendar year for the purposes specified in § 63.6640(f)(2)(ii) and (iii), you must use diesel fuel that meets the requirements in 40 CFR 80.510(b) for nonroad diesel fuel, except that any existing diesel fuel purchased (or otherwise obtained) prior to January 1, 2015, may be used until depleted.

(d) Existing CI stationary RICE located in Guam, American Samoa, the Commonwealth of the Northern Mariana Islands, at area sources in areas of Alaska that meet either § 63.6603(b)(1) or § 63.6603(b)(2), or are on offshore vessels that meet § 63.6603(c) are exempt from the requirements of this section.

[78 FR 6702, Jan. 30, 2013]

**General Compliance Requirements**

**§ 63.6605 What are my general requirements for complying with this subpart?**

(a) You must be in compliance with the emission limitations, operating limitations, and other requirements in this subpart that apply to you at all times.

(b) At all times you must operate and maintain any affected source, including associated air pollution control equipment and monitoring equipment, in a manner consistent with safety and good air pollution control practices for minimizing emissions. The general duty to minimize emissions does not require you to make any further efforts to reduce emissions if levels required by this standard have been achieved. Determination of whether such operation and maintenance procedures are being used will be based on information available to the Administrator which may include, but is not limited to, monitoring results, review of operation and maintenance procedures, review of operation and maintenance records, and inspection of the source.

[75 FR 9675, Mar. 3, 2010, as amended at 78 FR 6702, Jan. 30, 2013]

**Testing and Initial Compliance Requirements**

**§ 63.6610 By what date must I conduct the initial performance tests or other initial compliance demonstrations if I own or operate a stationary RICE with a site rating of more than 500 brake HP located at a major source of HAP emissions?**

If you own or operate a stationary RICE with a site rating of more than 500 brake HP located at a major source of HAP emissions you are subject to the requirements of this section.

(a) You must conduct the initial performance test or other initial compliance demonstrations in Table 4 to this subpart that apply to you within 180 days after the compliance date that is specified for your stationary RICE in § 63.6595 and according to the provisions in § 63.7(a)(2).

(b) If you commenced construction or reconstruction between December 19, 2002 and June 15, 2004 and own or operate stationary RICE with a site rating of more than 500 brake HP located at a major source of HAP emissions, you must demonstrate initial compliance with either the proposed emission limitations or the promulgated emission limitations no later than February 10, 2005 or no later than 180 days after startup of the source, whichever is later, according to § 63.7(a)(2)(ix).

(c) If you commenced construction or reconstruction between December 19, 2002 and June 15, 2004 and own or operate stationary RICE with a site rating of more than 500 brake HP located at a major source of HAP emissions, and you chose to comply with the proposed emission limitations when demonstrating initial compliance, you must conduct a second performance test to demonstrate compliance with the promulgated emission limitations by December 13, 2007 or after startup of the source, whichever is later, according to § 63.7(a)(2)(ix).

(d) An owner or operator is not required to conduct an initial performance test on units for which a performance test has been previously conducted, but the test must meet all of the conditions described in paragraphs (d)(1) through (5) of this section.

(1) The test must have been conducted using the same methods specified in this subpart, and these methods must have been followed correctly.

(2) The test must not be older than 2 years.

(3) The test must be reviewed and accepted by the Administrator.

(4) Either no process or equipment changes must have been made since the test was performed, or the owner or operator must be able to demonstrate that the results of the performance test, with or without adjustments, reliably demonstrate compliance despite process or equipment changes.

(5) The test must be conducted at any load condition within plus or minus 10 percent of 100 percent load.

[69 FR 33506, June 15, 2004, as amended at 73 FR 3605, Jan. 18, 2008]

**§ 63.6611 By what date must I conduct the initial performance tests or other initial compliance demonstrations if I own or operate a new or reconstructed 4SLB SI stationary RICE with a site rating of greater than or equal to 250 and less than or equal to 500 brake HP located at a major source of HAP emissions?**

If you own or operate a new or reconstructed 4SLB stationary RICE with a site rating of greater than or equal to 250 and less than or equal to 500 brake HP located at a major source of HAP emissions, you must conduct an initial performance test within 240 days after the compliance date that is specified for your stationary RICE in § 63.6595 and according to the provisions specified in Table 4 to this subpart, as appropriate.

[73 FR 3605, Jan. 18, 2008, as amended at 75 FR 51589, Aug. 20, 2010]

**§ 63.6612 By what date must I conduct the initial performance tests or other initial compliance demonstrations if I own or operate an existing stationary RICE with a site rating of less than or equal to 500 brake HP located at a major source of HAP emissions or an existing stationary RICE located at an area source of HAP emissions?**

If you own or operate an existing stationary RICE with a site rating of less than or equal to 500 brake HP located at a major source of HAP emissions or an existing stationary RICE located at an area source of HAP emissions you are subject to the requirements of this section.

(a) You must conduct any initial performance test or other initial compliance demonstration according to Tables 4 and 5 to this subpart that apply to you within 180 days after the compliance date that is specified for your stationary RICE in § 63.6595 and according to the provisions in § 63.7(a)(2).

(b) An owner or operator is not required to conduct an initial performance test on a unit for which a performance test has been previously conducted, but the test must meet all of the conditions described in paragraphs (b)(1) through (4) of this section.

(1) The test must have been conducted using the same methods specified in this subpart, and these methods must have been followed correctly.

(2) The test must not be older than 2 years.

(3) The test must be reviewed and accepted by the Administrator.

(4) Either no process or equipment changes must have been made since the test was performed, or the owner or operator must be able to demonstrate that the results of the performance test, with or without adjustments, reliably demonstrate compliance despite process or equipment changes.

[75 FR 9676, Mar. 3, 2010, as amended at 75 FR 51589, Aug. 20, 2010]

**§ 63.6615 When must I conduct subsequent performance tests?**

If you must comply with the emission limitations and operating limitations, you must conduct subsequent performance tests as specified in Table 3 of this subpart.

**§ 63.6620 What performance tests and other procedures must I use?**

(a) You must conduct each performance test in Tables 3 and 4 of this subpart that applies to you.

(b) Each performance test must be conducted according to the requirements that this subpart specifies in Table 4 to this subpart. If you own or operate a non-operational stationary RICE that is subject to performance testing, you do not need to start up the engine solely to conduct the performance test. Owners and operators of a non-operational engine can conduct the performance test when the engine is started up again. The test must be conducted at any load condition within plus or minus 10 percent of 100 percent load for the stationary RICE listed in paragraphs (b)(1) through (4) of this section.

(1) Non-emergency 4SRB stationary RICE with a site rating of greater than 500 brake HP located at a major source of HAP emissions.

(2) New non-emergency 4SLB stationary RICE with a site rating of greater than or equal to 250 brake HP located at a major source of HAP emissions.

(3) New non-emergency 2SLB stationary RICE with a site rating of greater than 500 brake HP located at a major source of HAP emissions.

(4) New non-emergency CI stationary RICE with a site rating of greater than 500 brake HP located at a major source of HAP emissions.

(c) [Reserved]

(d) You must conduct three separate test runs for each performance test required in this section, as specified in § 63.7(e)(3). Each test run must last at least 1 hour, unless otherwise specified in this subpart.

(e)(1) You must use Equation 1 of this section to determine compliance with the percent reduction requirement:

$$\frac{C_i - C_o}{C_i} \times 100 = R \quad (Eq.\ 1)$$

Where:

$C_i$ = concentration of carbon monoxide (CO), total hydrocarbons (THC), or formaldehyde at the control device inlet,

$C_o$ = concentration of CO, THC, or formaldehyde at the control device outlet, and

R = percent reduction of CO, THC, or formaldehyde emissions.

(2) You must normalize the CO, THC, or formaldehyde concentrations at the inlet and outlet of the control device to a dry basis and to 15 percent oxygen, or an equivalent percent carbon dioxide ($CO_2$ ). If pollutant concentrations are to be corrected to 15 percent oxygen and $CO_2$ concentration is measured in lieu of oxygen concentration measurement, a $CO_2$ correction factor is needed. Calculate the $CO_2$ correction factor as described in paragraphs (e)(2)(i) through (iii) of this section.

(i) Calculate the fuel-specific $F_o$ value for the fuel burned during the test using values obtained from Method 19, Section 5.2, and the following equation:

$$F_o = \frac{0.209\ F_d}{F_c} \quad (Eq.\ 2)$$

Where:

$F_o$ = Fuel factor based on the ratio of oxygen volume to the ultimate $CO_2$ volume produced by the fuel at zero percent excess air.

0.209 = Fraction of air that is oxygen, percent/100.

$F_d$ = Ratio of the volume of dry effluent gas to the gross calorific value of the fuel from Method 19, $dsm^3$ /J (dscf/$10^6$ Btu).

$F_c$ = Ratio of the volume of $CO_2$ produced to the gross calorific value of the fuel from Method 19, $dsm^3$ /J (dscf/$10^6$ Btu)

(ii) Calculate the $CO_2$ correction factor for correcting measurement data to 15 percent $O_2$ , as follows:

$$X_{CO2} = \frac{5.9}{F_o} \quad (Eq. 3)$$

Where:

$X_{CO2}$ = $CO_2$ correction factor, percent.

5.9 = 20.9 percent $O_2$ —15 percent $O_2$ , the defined $O_2$ correction value, percent.

(iii) Calculate the CO, THC, and formaldehyde gas concentrations adjusted to 15 percent $O_2$ using $CO_2$ as follows:

$$C_{adj} = C_d \frac{X_{CO2}}{\%CO_2} \quad (Eq. 4)$$

Where:

$C_{adj}$ = Calculated concentration of CO, THC, or formaldehyde adjusted to 15 percent $O_2$.

$C_d$ = Measured concentration of CO, THC, or formaldehyde, uncorrected.

$X_{CO2}$ = $CO_2$ correction factor, percent.

%$CO_2$ = Measured $CO_2$ concentration measured, dry basis, percent.

(f) If you comply with the emission limitation to reduce CO and you are not using an oxidation catalyst, if you comply with the emission limitation to reduce formaldehyde and you are not using NSCR, or if you comply with the emission limitation to limit the concentration of formaldehyde in the stationary RICE exhaust and you are not using an oxidation catalyst or NSCR, you must petition the Administrator for operating limitations to be established during the initial performance test and continuously monitored thereafter; or for approval of no operating limitations. You must not conduct the initial performance test until after the petition has been approved by the Administrator.

(g) If you petition the Administrator for approval of operating limitations, your petition must include the information described in paragraphs (g)(1) through (5) of this section.

(1) Identification of the specific parameters you propose to use as operating limitations;

(2) A discussion of the relationship between these parameters and HAP emissions, identifying how HAP emissions change with changes in these parameters, and how limitations on these parameters will serve to limit HAP emissions;

(3) A discussion of how you will establish the upper and/or lower values for these parameters which will establish the limits on these parameters in the operating limitations;

(4) A discussion identifying the methods you will use to measure and the instruments you will use to monitor these parameters, as well as the relative accuracy and precision of these methods and instruments; and

(5) A discussion identifying the frequency and methods for recalibrating the instruments you will use for monitoring these parameters.

(h) If you petition the Administrator for approval of no operating limitations, your petition must include the information described in paragraphs (h)(1) through (7) of this section.

(1) Identification of the parameters associated with operation of the stationary RICE and any emission control device which could change intentionally ( *e.g.,* operator adjustment, automatic controller adjustment, etc.) or unintentionally ( *e.g.,* wear and tear, error, etc.) on a routine basis or over time;

(2) A discussion of the relationship, if any, between changes in the parameters and changes in HAP emissions;

(3) For the parameters which could change in such a way as to increase HAP emissions, a discussion of whether establishing limitations on the parameters would serve to limit HAP emissions;

(4) For the parameters which could change in such a way as to increase HAP emissions, a discussion of how you could establish upper and/or lower values for the parameters which would establish limits on the parameters in operating limitations;

(5) For the parameters, a discussion identifying the methods you could use to measure them and the instruments you could use to monitor them, as well as the relative accuracy and precision of the methods and instruments;

(6) For the parameters, a discussion identifying the frequency and methods for recalibrating the instruments you could use to monitor them; and

(7) A discussion of why, from your point of view, it is infeasible or unreasonable to adopt the parameters as operating limitations.

(i) The engine percent load during a performance test must be determined by documenting the calculations, assumptions, and measurement devices used to measure or estimate the percent load in a specific application. A written report of the average percent load determination must be included in the notification of compliance status. The following information must be included in the written report: the engine model number, the engine manufacturer, the year of purchase, the manufacturer's site-rated brake horsepower, the ambient temperature, pressure, and humidity during the performance test, and all assumptions that were made to estimate or calculate percent load during the performance test must be clearly explained. If measurement devices such as flow meters, kilowatt meters, beta analyzers, stain gauges, etc. are used, the model number of the measurement device, and an estimate of its accurate in percentage of true value must be provided.

[69 FR 33506, June 15, 2004, as amended at 75 FR 9676, Mar. 3, 2010; 78 FR 6702, Jan. 30, 2013]

**§ 63.6625 What are my monitoring, installation, collection, operation, and maintenance requirements?**

(a) If you elect to install a CEMS as specified in Table 5 of this subpart, you must install, operate, and maintain a CEMS to monitor CO and either $O_2$ or $CO_2$ according to the requirements in paragraphs (a)(1) through (4) of this section. If you are meeting a requirement to reduce CO emissions, the CEMS must be installed at both the inlet and outlet of the control device. If you are meeting a requirement to limit the concentration of CO, the CEMS must be installed at the outlet of the control device.

(1) Each CEMS must be installed, operated, and maintained according to the applicable performance specifications of 40 CFR part 60, appendix B.

(2) You must conduct an initial performance evaluation and an annual relative accuracy test audit (RATA) of each CEMS according to the requirements in § 63.8 and according to the applicable performance specifications of 40 CFR part 60, appendix B as well as daily and periodic data quality checks in accordance with 40 CFR part 60, appendix F, procedure 1.

(3) As specified in § 63.8(c)(4)(ii), each CEMS must complete a minimum of one cycle of operation (sampling, analyzing, and data recording) for each successive 15-minute period. You must have at least two data points, with each representing a different 15-minute period, to have a valid hour of data.

(4) The CEMS data must be reduced as specified in § 63.8(g)(2) and recorded in parts per million or parts per billion (as appropriate for the applicable limitation) at 15 percent oxygen or the equivalent $CO_2$ concentration.

(b) If you are required to install a continuous parameter monitoring system (CPMS) as specified in Table 5 of this subpart, you must install, operate, and maintain each CPMS according to the requirements in paragraphs (b)(1) through (6) of this section. For an affected source that is complying with the emission limitations and operating limitations on March 9, 2011, the requirements in paragraph (b) of this section are applicable September 6, 2011.

(1) You must prepare a site-specific monitoring plan that addresses the monitoring system design, data collection, and the quality assurance and quality control elements outlined in paragraphs (b)(1)(i) through (v) of this section and in § 63.8(d). As specified in § 63.8(f)(4), you may request approval of monitoring system quality assurance and quality control procedures alternative to those specified in paragraphs (b)(1) through (5) of this section in your site-specific monitoring plan.

(i) The performance criteria and design specifications for the monitoring system equipment, including the sample interface, detector signal analyzer, and data acquisition and calculations;

(ii) Sampling interface ( *e.g.,* thermocouple) location such that the monitoring system will provide representative measurements;

(iii) Equipment performance evaluations, system accuracy audits, or other audit procedures;

(iv) Ongoing operation and maintenance procedures in accordance with provisions in § 63.8(c)(1)(ii) and (c)(3); and

(v) Ongoing reporting and recordkeeping procedures in accordance with provisions in § 63.10(c), (e)(1), and (e)(2)(i).

(2) You must install, operate, and maintain each CPMS in continuous operation according to the procedures in your site-specific monitoring plan.

(3) The CPMS must collect data at least once every 15 minutes (see also § 63.6635).

(4) For a CPMS for measuring temperature range, the temperature sensor must have a minimum tolerance of 2.8 degrees Celsius (5 degrees Fahrenheit) or 1 percent of the measurement range, whichever is larger.

(5) You must conduct the CPMS equipment performance evaluation, system accuracy audits, or other audit procedures specified in your site-specific monitoring plan at least annually.

(6) You must conduct a performance evaluation of each CPMS in accordance with your site-specific monitoring plan.

(c) If you are operating a new or reconstructed stationary RICE which fires landfill gas or digester gas equivalent to 10 percent or more of the gross heat input on an annual basis, you must monitor and record your fuel usage daily with separate fuel meters to measure the volumetric flow rate of each fuel. In addition, you must operate your stationary RICE in a manner which reasonably minimizes HAP emissions.

(d) If you are operating a new or reconstructed emergency 4SLB stationary RICE with a site rating of greater than or equal to 250 and less than or equal to 500 brake HP located at a major source of HAP emissions, you must install a non-resettable hour meter prior to the startup of the engine.

(e) If you own or operate any of the following stationary RICE, you must operate and maintain the stationary RICE and after-treatment control device (if any) according to the manufacturer's emission-related written instructions or develop your own maintenance plan which must provide to the extent practicable for the maintenance and operation of the engine in a manner consistent with good air pollution control practice for minimizing emissions:

(1) An existing stationary RICE with a site rating of less than 100 HP located at a major source of HAP emissions;

(2) An existing emergency or black start stationary RICE with a site rating of less than or equal to 500 HP located at a major source of HAP emissions;

(3) An existing emergency or black start stationary RICE located at an area source of HAP emissions;

(4) An existing non-emergency, non-black start stationary CI RICE with a site rating less than or equal to 300 HP located at an area source of HAP emissions;

(5) An existing non-emergency, non-black start 2SLB stationary RICE located at an area source of HAP emissions;

(6) An existing non-emergency, non-black start stationary RICE located at an area source of HAP emissions which combusts landfill or digester gas equivalent to 10 percent or more of the gross heat input on an annual basis.

(7) An existing non-emergency, non-black start 4SLB stationary RICE with a site rating less than or equal to 500 HP located at an area source of HAP emissions;

(8) An existing non-emergency, non-black start 4SRB stationary RICE with a site rating less than or equal to 500 HP located at an area source of HAP emissions;

(9) An existing, non-emergency, non-black start 4SLB stationary RICE with a site rating greater than 500 HP located at an area source of HAP emissions that is operated 24 hours or less per calendar year; and

(10) An existing, non-emergency, non-black start 4SRB stationary RICE with a site rating greater than 500 HP located at an area source of HAP emissions that is operated 24 hours or less per calendar year.

(f) If you own or operate an existing emergency stationary RICE with a site rating of less than or equal to 500 brake HP located at a major source of HAP emissions or an existing emergency stationary RICE located at an area source of HAP emissions, you must install a non-resettable hour meter if one is not already installed.

(g) If you own or operate an existing non-emergency, non-black start CI engine greater than or equal to 300 HP that is not equipped with a closed crankcase ventilation system, you must comply with either paragraph (g)(1) or paragraph (2) of this section. Owners and operators must follow the manufacturer's specified maintenance requirements for operating and maintaining the open or closed crankcase ventilation systems and replacing the crankcase filters, or can request the Administrator to approve different maintenance requirements that are as protective as manufacturer requirements. Existing CI engines located at area sources in areas of Alaska that meet either § 63.6603(b)(1) or § 63.6603(b)(2) do not have to meet the requirements of this paragraph (g). Existing CI engines located on offshore vessels that meet § 63.6603(c) do not have to meet the requirements of this paragraph (g).

(1) Install a closed crankcase ventilation system that prevents crankcase emissions from being emitted to the atmosphere, or

(2) Install an open crankcase filtration emission control system that reduces emissions from the crankcase by filtering the exhaust stream to remove oil mist, particulates and metals.

(h) If you operate a new, reconstructed, or existing stationary engine, you must minimize the engine's time spent at idle during startup and minimize the engine's startup time to a period needed for appropriate and safe loading of the engine, not to exceed 30 minutes, after which time the emission standards applicable to all times other than startup in Tables 1a, 2a, 2c, and 2d to this subpart apply.

(i) If you own or operate a stationary CI engine that is subject to the work, operation or management practices in items 1 or 2 of Table 2c to this subpart or in items 1 or 4 of Table 2d to this subpart, you have the option of utilizing an oil analysis program in order to extend the specified oil change requirement in Tables 2c and 2d to this subpart. The oil analysis must be performed at the same frequency specified for changing the oil in Table 2c or 2d to this subpart. The analysis program must at a minimum analyze the following three parameters: Total Base Number, viscosity, and percent water content. The condemning limits for these parameters are as follows: Total Base Number is less than 30 percent of the Total Base Number of the oil when new; viscosity of the oil has changed by more than 20 percent from

the viscosity of the oil when new; or percent water content (by volume) is greater than 0.5. If all of these condemning limits are not exceeded, the engine owner or operator is not required to change the oil. If any of the limits are exceeded, the engine owner or operator must change the oil within 2 business days of receiving the results of the analysis; if the engine is not in operation when the results of the analysis are received, the engine owner or operator must change the oil within 2 business days or before commencing operation, whichever is later. The owner or operator must keep records of the parameters that are analyzed as part of the program, the results of the analysis, and the oil changes for the engine. The analysis program must be part of the maintenance plan for the engine.

(j) If you own or operate a stationary SI engine that is subject to the work, operation or management practices in items 6, 7, or 8 of Table 2c to this subpart or in items 5, 6, 7, 9, or 11 of Table 2d to this subpart, you have the option of utilizing an oil analysis program in order to extend the specified oil change requirement in Tables 2c and 2d to this subpart. The oil analysis must be performed at the same frequency specified for changing the oil in Table 2c or 2d to this subpart. The analysis program must at a minimum analyze the following three parameters: Total Acid Number, viscosity, and percent water content. The condemning limits for these parameters are as follows: Total Acid Number increases by more than 3.0 milligrams of potassium hydroxide (KOH) per gram from Total Acid Number of the oil when new; viscosity of the oil has changed by more than 20 percent from the viscosity of the oil when new; or percent water content (by volume) is greater than 0.5. If all of these condemning limits are not exceeded, the engine owner or operator is not required to change the oil. If any of the limits are exceeded, the engine owner or operator must change the oil within 2 business days of receiving the results of the analysis; if the engine is not in operation when the results of the analysis are received, the engine owner or operator must change the oil within 2 business days or before commencing operation, whichever is later. The owner or operator must keep records of the parameters that are analyzed as part of the program, the results of the analysis, and the oil changes for the engine. The analysis program must be part of the maintenance plan for the engine.

[69 FR 33506, June 15, 2004, as amended at 73 FR 3606, Jan. 18, 2008; 75 FR 9676, Mar. 3, 2010; 75 FR 51589, Aug. 20, 2010; 76 FR 12866, Mar. 9, 2011; 78 FR 6703, Jan. 30, 2013]

**§ 63.6630 How do I demonstrate initial compliance with the emission limitations, operating limitations, and other requirements?**

(a) You must demonstrate initial compliance with each emission limitation, operating limitation, and other requirement that applies to you according to Table 5 of this subpart.

(b) During the initial performance test, you must establish each operating limitation in Tables 1b and 2b of this subpart that applies to you.

(c) You must submit the Notification of Compliance Status containing the results of the initial compliance demonstration according to the requirements in § 63.6645.

(d) Non-emergency 4SRB stationary RICE complying with the requirement to reduce formaldehyde emissions by 76 percent or more can demonstrate initial compliance with the formaldehyde emission limit by testing for THC instead of formaldehyde. The testing must be conducted according to the requirements in Table 4 of this subpart. The average reduction of emissions of THC determined from the performance test must be equal to or greater than 30 percent.

(e) The initial compliance demonstration required for existing non-emergency 4SLB and 4SRB stationary RICE with a site rating of more than 500 HP located at an area source of HAP that are not remote stationary RICE and that are operated more than 24 hours per calendar year must be conducted according to the following requirements:

(1) The compliance demonstration must consist of at least three test runs.

(2) Each test run must be of at least 15 minute duration, except that each test conducted using the method in appendix A to this subpart must consist of at least one measurement cycle and include at least 2 minutes of test data phase measurement.

(3) If you are demonstrating compliance with the CO concentration or CO percent reduction requirement, you must measure CO emissions using one of the CO measurement methods specified in Table 4 of this subpart, or using appendix A to this subpart.

(4) If you are demonstrating compliance with the THC percent reduction requirement, you must measure THC emissions using Method 25A, reported as propane, of 40 CFR part 60, appendix A.

(5) You must measure $O_2$ using one of the $O_2$ measurement methods specified in Table 4 of this subpart. Measurements to determine $O_2$ concentration must be made at the same time as the measurements for CO or THC concentration.

(6) If you are demonstrating compliance with the CO or THC percent reduction requirement, you must measure CO or THC emissions and $O_2$ emissions simultaneously at the inlet and outlet of the control device.

[69 FR 33506, June 15, 2004, as amended at 78 FR 6704, Jan. 30, 2013]

**Continuous Compliance Requirements**

**§ 63.6635 How do I monitor and collect data to demonstrate continuous compliance?**

(a) If you must comply with emission and operating limitations, you must monitor and collect data according to this section.

(b) Except for monitor malfunctions, associated repairs, required performance evaluations, and required quality assurance or control activities, you must monitor continuously at all times that the stationary RICE is operating. A monitoring malfunction is any sudden, infrequent, not reasonably preventable failure of the monitoring to provide valid data. Monitoring failures that are caused in part by poor maintenance or careless operation are not malfunctions.

(c) You may not use data recorded during monitoring malfunctions, associated repairs, and required quality assurance or control activities in data averages and calculations used to report emission or operating levels. You must, however, use all the valid data collected during all other periods.

[69 FR 33506, June 15, 2004, as amended at 76 FR 12867, Mar. 9, 2011]

**§ 63.6640 How do I demonstrate continuous compliance with the emission limitations, operating limitations, and other requirements?**

(a) You must demonstrate continuous compliance with each emission limitation, operating limitation, and other requirements in Tables 1a and 1b, Tables 2a and 2b, Table 2c, and Table 2d to this subpart that apply to you according to methods specified in Table 6 to this subpart.

(b) You must report each instance in which you did not meet each emission limitation or operating limitation in Tables 1a and 1b, Tables 2a and 2b, Table 2c, and Table 2d to this subpart that apply to you. These instances are deviations from the emission and operating limitations in this subpart. These deviations must be reported according to the requirements in § 63.6650. If you change your catalyst, you must reestablish the values of the operating parameters measured during the initial performance test. When you reestablish the values of your operating parameters, you must also conduct a performance test to demonstrate that you are meeting the required emission limitation applicable to your stationary RICE.

(c) The annual compliance demonstration required for existing non-emergency 4SLB and 4SRB stationary RICE with a site rating of more than 500 HP located at an area source of HAP that are not remote stationary RICE and that are operated more than 24 hours per calendar year must be conducted according to the following requirements:

(1) The compliance demonstration must consist of at least one test run.

(2) Each test run must be of at least 15 minute duration, except that each test conducted using the method in appendix A to this subpart must consist of at least one measurement cycle and include at least 2 minutes of test data phase measurement.

(3) If you are demonstrating compliance with the CO concentration or CO percent reduction requirement, you must measure CO emissions using one of the CO measurement methods specified in Table 4 of this subpart, or using appendix A to this subpart.

(4) If you are demonstrating compliance with the THC percent reduction requirement, you must measure THC emissions using Method 25A, reported as propane, of 40 CFR part 60, appendix A.

(5) You must measure $O_2$ using one of the $O_2$ measurement methods specified in Table 4 of this subpart. Measurements to determine $O_2$ concentration must be made at the same time as the measurements for CO or THC concentration.

(6) If you are demonstrating compliance with the CO or THC percent reduction requirement, you must measure CO or THC emissions and $O_2$ emissions simultaneously at the inlet and outlet of the control device.

(7) If the results of the annual compliance demonstration show that the emissions exceed the levels specified in Table 6 of this subpart, the stationary RICE must be shut down as soon as safely possible, and appropriate corrective action must be taken (e.g., repairs, catalyst cleaning, catalyst replacement). The stationary RICE must be retested within 7 days of being restarted and the emissions must meet the levels specified in Table 6 of this subpart. If the retest shows that the emissions continue to exceed the specified levels, the stationary RICE must again be shut down as soon as safely possible, and the stationary RICE may not operate, except for purposes of startup and testing, until the owner/operator demonstrates through testing that the emissions do not exceed the levels specified in Table 6 of this subpart.

(d) For new, reconstructed, and rebuilt stationary RICE, deviations from the emission or operating limitations that occur during the first 200 hours of operation from engine startup (engine burn-in period) are not violations. Rebuilt stationary RICE means a stationary RICE that has been rebuilt as that term is defined in 40 CFR 94.11(a).

(e) You must also report each instance in which you did not meet the requirements in Table 8 to this subpart that apply to you. If you own or operate a new or reconstructed stationary RICE with a site rating of less than or equal to 500 brake HP located at a major source of HAP emissions (except new or reconstructed 4SLB engines greater than or equal to 250 and less than or equal to 500 brake HP), a new or reconstructed stationary RICE located at an area source of HAP emissions, or any of the following RICE with a site rating of more than 500 brake HP located at a major source of HAP emissions, you do not need to comply with the requirements in Table 8 to this subpart: An existing 2SLB stationary RICE, an existing 4SLB stationary RICE, an existing emergency stationary RICE, an existing limited use stationary RICE, or an existing stationary RICE which fires landfill gas or digester gas equivalent to 10 percent or more of the gross heat input on an annual basis. If you own or operate any of the following RICE with a site rating of more than 500 brake HP located at a major source of HAP emissions, you do not need to comply with the requirements in Table 8 to this subpart, except for the initial notification requirements: a new or reconstructed stationary RICE that combusts landfill gas or digester gas equivalent to 10 percent or more of the gross heat input on an annual basis, a new or reconstructed emergency stationary RICE, or a new or reconstructed limited use stationary RICE.

(f) If you own or operate an emergency stationary RICE, you must operate the emergency stationary RICE according to the requirements in paragraphs (f)(1) through (4) of this section. In order for the engine to be considered an emergency stationary RICE under this subpart, any operation other than emergency operation, maintenance and testing, emergency demand response, and operation in non-emergency situations for 50 hours per year, as described in paragraphs (f)(1) through (4) of this section, is prohibited. If you do not operate the engine according to the requirements in paragraphs (f)(1) through (4) of this section, the engine will not be considered an emergency engine under this subpart and must meet all requirements for non-emergency engines.

(1) There is no time limit on the use of emergency stationary RICE in emergency situations.

(2) You may operate your emergency stationary RICE for any combination of the purposes specified in paragraphs (f)(2)(i) through (iii) of this section for a maximum of 100 hours per calendar year. Any operation for non-emergency situations as allowed by paragraphs (f)(3) and (4) of this section counts as part of the 100 hours per calendar year allowed by this paragraph (f)(2).

(i) Emergency stationary RICE may be operated for maintenance checks and readiness testing, provided that the tests are recommended by federal, state or local government, the manufacturer, the vendor, the regional

transmission organization or equivalent balancing authority and transmission operator, or the insurance company associated with the engine. The owner or operator may petition the Administrator for approval of additional hours to be used for maintenance checks and readiness testing, but a petition is not required if the owner or operator maintains records indicating that federal, state, or local standards require maintenance and testing of emergency RICE beyond 100 hours per calendar year.

(ii) Emergency stationary RICE may be operated for emergency demand response for periods in which the Reliability Coordinator under the North American Electric Reliability Corporation (NERC) Reliability Standard EOP-002-3, Capacity and Energy Emergencies (incorporated by reference, see § 63.14), or other authorized entity as determined by the Reliability Coordinator, has declared an Energy Emergency Alert Level 2 as defined in the NERC Reliability Standard EOP-002-3.

(iii) Emergency stationary RICE may be operated for periods where there is a deviation of voltage or frequency of 5 percent or greater below standard voltage or frequency.

(3) Emergency stationary RICE located at major sources of HAP may be operated for up to 50 hours per calendar year in non-emergency situations. The 50 hours of operation in non-emergency situations are counted as part of the 100 hours per calendar year for maintenance and testing and emergency demand response provided in paragraph (f)(2) of this section. The 50 hours per year for non-emergency situations cannot be used for peak shaving or non-emergency demand response, or to generate income for a facility to supply power to an electric grid or otherwise supply power as part of a financial arrangement with another entity.

(4) Emergency stationary RICE located at area sources of HAP may be operated for up to 50 hours per calendar year in non-emergency situations. The 50 hours of operation in non-emergency situations are counted as part of the 100 hours per calendar year for maintenance and testing and emergency demand response provided in paragraph (f)(2) of this section. Except as provided in paragraphs (f)(4)(i) and (ii) of this section, the 50 hours per year for non-emergency situations cannot be used for peak shaving or non-emergency demand response, or to generate income for a facility to an electric grid or otherwise supply power as part of a financial arrangement with another entity.

(i) Prior to May 3, 2014, the 50 hours per year for non-emergency situations can be used for peak shaving or non-emergency demand response to generate income for a facility, or to otherwise supply power as part of a financial arrangement with another entity if the engine is operated as part of a peak shaving (load management program) with the local distribution system operator and the power is provided only to the facility itself or to support the local distribution system.

(ii) The 50 hours per year for non-emergency situations can be used to supply power as part of a financial arrangement with another entity if all of the following conditions are met:

(A) The engine is dispatched by the local balancing authority or local transmission and distribution system operator.

(B) The dispatch is intended to mitigate local transmission and/or distribution limitations so as to avert potential voltage collapse or line overloads that could lead to the interruption of power supply in a local area or region.

(C) The dispatch follows reliability, emergency operation or similar protocols that follow specific NERC, regional, state, public utility commission or local standards or guidelines.

(D) The power is provided only to the facility itself or to support the local transmission and distribution system.

(E) The owner or operator identifies and records the entity that dispatches the engine and the specific NERC, regional, state, public utility commission or local standards or guidelines that are being followed for dispatching the engine. The local balancing authority or local transmission and distribution system operator may keep these records on behalf of the engine owner or operator.

[69 FR 33506, June 15, 2004, as amended at 71 FR 20467, Apr. 20, 2006; 73 FR 3606, Jan. 18, 2008; 75 FR 9676, Mar. 3, 2010; 75 FR 51591, Aug. 20, 2010; 78 FR 6704, Jan. 30, 2013]

**Notifications, Reports, and Records**

**§ 63.6645 What notifications must I submit and when?**

(a) You must submit all of the notifications in §§ 63.7(b) and (c), 63.8(e), (f)(4) and (f)(6), 63.9(b) through (e), and (g) and (h) that apply to you by the dates specified if you own or operate any of the following;

(1) An existing stationary RICE with a site rating of less than or equal to 500 brake HP located at a major source of HAP emissions.

(2) An existing stationary RICE located at an area source of HAP emissions.

(3) A stationary RICE with a site rating of more than 500 brake HP located at a major source of HAP emissions.

(4) A new or reconstructed 4SLB stationary RICE with a site rating of greater than or equal to 250 HP located at a major source of HAP emissions.

(5) This requirement does not apply if you own or operate an existing stationary RICE less than 100 HP, an existing stationary emergency RICE, or an existing stationary RICE that is not subject to any numerical emission standards.

(b) As specified in § 63.9(b)(2), if you start up your stationary RICE with a site rating of more than 500 brake HP located at a major source of HAP emissions before the effective date of this subpart, you must submit an Initial Notification not later than December 13, 2004.

(c) If you start up your new or reconstructed stationary RICE with a site rating of more than 500 brake HP located at a major source of HAP emissions on or after August 16, 2004, you must submit an Initial Notification not later than 120 days after you become subject to this subpart.

(d) As specified in § 63.9(b)(2), if you start up your stationary RICE with a site rating of equal to or less than 500 brake HP located at a major source of HAP emissions before the effective date of this subpart and you are required to submit an initial notification, you must submit an Initial Notification not later than July 16, 2008.

(e) If you start up your new or reconstructed stationary RICE with a site rating of equal to or less than 500 brake HP located at a major source of HAP emissions on or after March 18, 2008 and you are required to submit an initial notification, you must submit an Initial Notification not later than 120 days after you become subject to this subpart.

(f) If you are required to submit an Initial Notification but are otherwise not affected by the requirements of this subpart, in accordance with § 63.6590(b), your notification should include the information in § 63.9(b)(2)(i) through (v), and a statement that your stationary RICE has no additional requirements and explain the basis of the exclusion (for example, that it operates exclusively as an emergency stationary RICE if it has a site rating of more than 500 brake HP located at a major source of HAP emissions).

(g) If you are required to conduct a performance test, you must submit a Notification of Intent to conduct a performance test at least 60 days before the performance test is scheduled to begin as required in § 63.7(b)(1).

(h) If you are required to conduct a performance test or other initial compliance demonstration as specified in Tables 4 and 5 to this subpart, you must submit a Notification of Compliance Status according to § 63.9(h)(2)(ii).

(1) For each initial compliance demonstration required in Table 5 to this subpart that does not include a performance test, you must submit the Notification of Compliance Status before the close of business on the 30th day following the completion of the initial compliance demonstration.

(2) For each initial compliance demonstration required in Table 5 to this subpart that includes a performance test conducted according to the requirements in Table 3 to this subpart, you must submit the Notification of Compliance Status, including the performance test results, before the close of business on the 60th day following the completion of the performance test according to § 63.10(d)(2).

(i) If you own or operate an existing non-emergency CI RICE with a site rating of more than 300 HP located at an area source of HAP emissions that is certified to the Tier 1 or Tier 2 emission standards in Table 1 of 40 CFR 89.112 and subject to an enforceable state or local standard requiring engine replacement and you intend to meet management practices rather than emission limits, as specified in § 63.6603(d), you must submit a notification by March 3, 2013, stating that you intend to use the provision in § 63.6603(d) and identifying the state or local regulation that the engine is subject to.

[73 FR 3606, Jan. 18, 2008, as amended at 75 FR 9677, Mar. 3, 2010; 75 FR 51591, Aug. 20, 2010; 78 FR 6705, Jan. 30, 2013]

**§ 63.6650 What reports must I submit and when?**

(a) You must submit each report in Table 7 of this subpart that applies to you.

(b) Unless the Administrator has approved a different schedule for submission of reports under § 63.10(a), you must submit each report by the date in Table 7 of this subpart and according to the requirements in paragraphs (b)(1) through (b)(9) of this section.

(1) For semiannual Compliance reports, the first Compliance report must cover the period beginning on the compliance date that is specified for your affected source in § 63.6595 and ending on June 30 or December 31, whichever date is the first date following the end of the first calendar half after the compliance date that is specified for your source in § 63.6595.

(2) For semiannual Compliance reports, the first Compliance report must be postmarked or delivered no later than July 31 or January 31, whichever date follows the end of the first calendar half after the compliance date that is specified for your affected source in § 63.6595.

(3) For semiannual Compliance reports, each subsequent Compliance report must cover the semiannual reporting period from January 1 through June 30 or the semiannual reporting period from July 1 through December 31.

(4) For semiannual Compliance reports, each subsequent Compliance report must be postmarked or delivered no later than July 31 or January 31, whichever date is the first date following the end of the semiannual reporting period.

(5) For each stationary RICE that is subject to permitting regulations pursuant to 40 CFR part 70 or 71, and if the permitting authority has established dates for submitting semiannual reports pursuant to 40 CFR 70.6(a)(3)(iii)(A) or 40 CFR 71.6 (a)(3)(iii)(A), you may submit the first and subsequent Compliance reports according to the dates the permitting authority has established instead of according to the dates in paragraphs (b)(1) through (b)(4) of this section.

(6) For annual Compliance reports, the first Compliance report must cover the period beginning on the compliance date that is specified for your affected source in § 63.6595 and ending on December 31.

(7) For annual Compliance reports, the first Compliance report must be postmarked or delivered no later than January 31 following the end of the first calendar year after the compliance date that is specified for your affected source in § 63.6595.

(8) For annual Compliance reports, each subsequent Compliance report must cover the annual reporting period from January 1 through December 31.

(9) For annual Compliance reports, each subsequent Compliance report must be postmarked or delivered no later than January 31.

(c) The Compliance report must contain the information in paragraphs (c)(1) through (6) of this section.

(1) Company name and address.

(2) Statement by a responsible official, with that official's name, title, and signature, certifying the accuracy of the content of the report.

(3) Date of report and beginning and ending dates of the reporting period.

(4) If you had a malfunction during the reporting period, the compliance report must include the number, duration, and a brief description for each type of malfunction which occurred during the reporting period and which caused or may have caused any applicable emission limitation to be exceeded. The report must also include a description of actions taken by an owner or operator during a malfunction of an affected source to minimize emissions in accordance with § 63.6605(b), including actions taken to correct a malfunction.

(5) If there are no deviations from any emission or operating limitations that apply to you, a statement that there were no deviations from the emission or operating limitations during the reporting period.

(6) If there were no periods during which the continuous monitoring system (CMS), including CEMS and CPMS, was out-of-control, as specified in § 63.8(c)(7), a statement that there were no periods during which the CMS was out-of-control during the reporting period.

(d) For each deviation from an emission or operating limitation that occurs for a stationary RICE where you are not using a CMS to comply with the emission or operating limitations in this subpart, the Compliance report must contain the information in paragraphs (c)(1) through (4) of this section and the information in paragraphs (d)(1) and (2) of this section.

(1) The total operating time of the stationary RICE at which the deviation occurred during the reporting period.

(2) Information on the number, duration, and cause of deviations (including unknown cause, if applicable), as applicable, and the corrective action taken.

(e) For each deviation from an emission or operating limitation occurring for a stationary RICE where you are using a CMS to comply with the emission and operating limitations in this subpart, you must include information in paragraphs (c)(1) through (4) and (e)(1) through (12) of this section.

(1) The date and time that each malfunction started and stopped.

(2) The date, time, and duration that each CMS was inoperative, except for zero (low-level) and high-level checks.

(3) The date, time, and duration that each CMS was out-of-control, including the information in § 63.8(c)(8).

(4) The date and time that each deviation started and stopped, and whether each deviation occurred during a period of malfunction or during another period.

(5) A summary of the total duration of the deviation during the reporting period, and the total duration as a percent of the total source operating time during that reporting period.

(6) A breakdown of the total duration of the deviations during the reporting period into those that are due to control equipment problems, process problems, other known causes, and other unknown causes.

(7) A summary of the total duration of CMS downtime during the reporting period, and the total duration of CMS downtime as a percent of the total operating time of the stationary RICE at which the CMS downtime occurred during that reporting period.

(8) An identification of each parameter and pollutant (CO or formaldehyde) that was monitored at the stationary RICE.

(9) A brief description of the stationary RICE.

(10) A brief description of the CMS.

(11) The date of the latest CMS certification or audit.

(12) A description of any changes in CMS, processes, or controls since the last reporting period.

(f) Each affected source that has obtained a title V operating permit pursuant to 40 CFR part 70 or 71 must report all deviations as defined in this subpart in the semiannual monitoring report required by 40 CFR 70.6 (a)(3)(iii)(A) or 40 CFR 71.6(a)(3)(iii)(A). If an affected source submits a Compliance report pursuant to Table 7 of this subpart along with, or as part of, the semiannual monitoring report required by 40 CFR 70.6(a)(3)(iii)(A) or 40 CFR 71.6(a)(3)(iii)(A), and the Compliance report includes all required information concerning deviations from any emission or operating limitation in this subpart, submission of the Compliance report shall be deemed to satisfy any obligation to report the same deviations in the semiannual monitoring report. However, submission of a Compliance report shall not otherwise affect any obligation the affected source may have to report deviations from permit requirements to the permit authority.

(g) If you are operating as a new or reconstructed stationary RICE which fires landfill gas or digester gas equivalent to 10 percent or more of the gross heat input on an annual basis, you must submit an annual report according to Table 7 of this subpart by the date specified unless the Administrator has approved a different schedule, according to the information described in paragraphs (b)(1) through (b)(5) of this section. You must report the data specified in (g)(1) through (g)(3) of this section.

(1) Fuel flow rate of each fuel and the heating values that were used in your calculations. You must also demonstrate that the percentage of heat input provided by landfill gas or digester gas is equivalent to 10 percent or more of the total fuel consumption on an annual basis.

(2) The operating limits provided in your federally enforceable permit, and any deviations from these limits.

(3) Any problems or errors suspected with the meters.

(h) If you own or operate an emergency stationary RICE with a site rating of more than 100 brake HP that operates or is contractually obligated to be available for more than 15 hours per calendar year for the purposes specified in § 63.6640(f)(2)(ii) and (iii) or that operates for the purpose specified in § 63.6640(f)(4)(ii), you must submit an annual report according to the requirements in paragraphs (h)(1) through (3) of this section.

(1) The report must contain the following information:

(i) Company name and address where the engine is located.

(ii) Date of the report and beginning and ending dates of the reporting period.

(iii) Engine site rating and model year.

(iv) Latitude and longitude of the engine in decimal degrees reported to the fifth decimal place.

(v) Hours operated for the purposes specified in § 63.6640(f)(2)(ii) and (iii), including the date, start time, and end time for engine operation for the purposes specified in § 63.6640(f)(2)(ii) and (iii).

(vi) Number of hours the engine is contractually obligated to be available for the purposes specified in § 63.6640(f)(2)(ii) and (iii).

(vii) Hours spent for operation for the purpose specified in § 63.6640(f)(4)(ii), including the date, start time, and end time for engine operation for the purposes specified in § 63.6640(f)(4)(ii). The report must also identify the entity that dispatched the engine and the situation that necessitated the dispatch of the engine.

(viii) If there were no deviations from the fuel requirements in § 63.6604 that apply to the engine (if any), a statement that there were no deviations from the fuel requirements during the reporting period.

(ix) If there were deviations from the fuel requirements in § 63.6604 that apply to the engine (if any), information on the number, duration, and cause of deviations, and the corrective action taken.

(2) The first annual report must cover the calendar year 2015 and must be submitted no later than March 31, 2016. Subsequent annual reports for each calendar year must be submitted no later than March 31 of the following calendar year.

(3) The annual report must be submitted electronically using the subpart specific reporting form in the Compliance and Emissions Data Reporting Interface (CEDRI) that is accessed through EPA's Central Data Exchange (CDX) ( *www.epa.gov/cdx* ). However, if the reporting form specific to this subpart is not available in CEDRI at the time that the report is due, the written report must be submitted to the Administrator at the appropriate address listed in § 63.13.

[69 FR 33506, June 15, 2004, as amended at 75 FR 9677, Mar. 3, 2010; 78 FR 6705, Jan. 30, 2013]

**§ 63.6655 What records must I keep?**

(a) If you must comply with the emission and operating limitations, you must keep the records described in paragraphs (a)(1) through (a)(5), (b)(1) through (b)(3) and (c) of this section.

(1) A copy of each notification and report that you submitted to comply with this subpart, including all documentation supporting any Initial Notification or Notification of Compliance Status that you submitted, according to the requirement in § 63.10(b)(2)(xiv).

(2) Records of the occurrence and duration of each malfunction of operation ( *i.e.,* process equipment) or the air pollution control and monitoring equipment.

(3) Records of performance tests and performance evaluations as required in § 63.10(b)(2)(viii).

(4) Records of all required maintenance performed on the air pollution control and monitoring equipment.

(5) Records of actions taken during periods of malfunction to minimize emissions in accordance with § 63.6605(b), including corrective actions to restore malfunctioning process and air pollution control and monitoring equipment to its normal or usual manner of operation.

(b) For each CEMS or CPMS, you must keep the records listed in paragraphs (b)(1) through (3) of this section.

(1) Records described in § 63.10(b)(2)(vi) through (xi).

(2) Previous ( *i.e.,* superseded) versions of the performance evaluation plan as required in § 63.8(d)(3).

(3) Requests for alternatives to the relative accuracy test for CEMS or CPMS as required in § 63.8(f)(6)(i), if applicable.

(c) If you are operating a new or reconstructed stationary RICE which fires landfill gas or digester gas equivalent to 10 percent or more of the gross heat input on an annual basis, you must keep the records of your daily fuel usage monitors.

(d) You must keep the records required in Table 6 of this subpart to show continuous compliance with each emission or operating limitation that applies to you.

(e) You must keep records of the maintenance conducted on the stationary RICE in order to demonstrate that you operated and maintained the stationary RICE and after-treatment control device (if any) according to your own maintenance plan if you own or operate any of the following stationary RICE;

(1) An existing stationary RICE with a site rating of less than 100 brake HP located at a major source of HAP emissions.

(2) An existing stationary emergency RICE.

(3) An existing stationary RICE located at an area source of HAP emissions subject to management practices as shown in Table 2d to this subpart.

(f) If you own or operate any of the stationary RICE in paragraphs (f)(1) through (2) of this section, you must keep records of the hours of operation of the engine that is recorded through the non-resettable hour meter. The owner or operator must document how many hours are spent for emergency operation, including what classified the operation as emergency and how many hours are spent for non-emergency operation. If the engine is used for the purposes specified in § 63.6640(f)(2)(ii) or (iii) or § 63.6640(f)(4)(ii), the owner or operator must keep records of the notification of the emergency situation, and the date, start time, and end time of engine operation for these purposes.

(1) An existing emergency stationary RICE with a site rating of less than or equal to 500 brake HP located at a major source of HAP emissions that does not meet the standards applicable to non-emergency engines.

(2) An existing emergency stationary RICE located at an area source of HAP emissions that does not meet the standards applicable to non-emergency engines.

[69 FR 33506, June 15, 2004, as amended at 75 FR 9678, Mar. 3, 2010; 75 FR 51592, Aug. 20, 2010; 78 FR 6706, Jan. 30, 2013]

**§ 63.6660 In what form and how long must I keep my records?**

(a) Your records must be in a form suitable and readily available for expeditious review according to § 63.10(b)(1).

(b) As specified in § 63.10(b)(1), you must keep each record for 5 years following the date of each occurrence, measurement, maintenance, corrective action, report, or record.

(c) You must keep each record readily accessible in hard copy or electronic form for at least 5 years after the date of each occurrence, measurement, maintenance, corrective action, report, or record, according to § 63.10(b)(1).

[69 FR 33506, June 15, 2004, as amended at 75 FR 9678, Mar. 3, 2010]

**Other Requirements and Information**

**§ 63.6665 What parts of the General Provisions apply to me?**

Table 8 to this subpart shows which parts of the General Provisions in §§ 63.1 through 63.15 apply to you. If you own or operate a new or reconstructed stationary RICE with a site rating of less than or equal to 500 brake HP located at a major source of HAP emissions (except new or reconstructed 4SLB engines greater than or equal to 250 and less than or equal to 500 brake HP), a new or reconstructed stationary RICE located at an area source of HAP emissions, or any of the following RICE with a site rating of more than 500 brake HP located at a major source of HAP emissions, you do not need to comply with any of the requirements of the General Provisions specified in Table 8: An existing 2SLB stationary RICE, an existing 4SLB stationary RICE, an existing stationary RICE that combusts landfill or digester gas equivalent to 10 percent or more of the gross heat input on an annual basis, an existing emergency stationary RICE, or an existing limited use stationary RICE. If you own or operate any of the following RICE with a site rating of more than 500 brake HP located at a major source of HAP emissions, you do not need to comply with the requirements in the General Provisions specified in Table 8 except for the initial notification requirements: A new stationary RICE that combusts landfill gas or digester gas equivalent to 10 percent or more of the gross heat input on an annual basis, a new emergency stationary RICE, or a new limited use stationary RICE.

[75 FR 9678, Mar. 3, 2010]

**§ 63.6670 Who implements and enforces this subpart?**

(a) This subpart is implemented and enforced by the U.S. EPA, or a delegated authority such as your State, local, or tribal agency. If the U.S. EPA Administrator has delegated authority to your State, local, or tribal agency, then that agency (as well as the U.S. EPA) has the authority to implement and enforce this subpart. You should contact your U.S. EPA Regional Office to find out whether this subpart is delegated to your State, local, or tribal agency.

(b) In delegating implementation and enforcement authority of this subpart to a State, local, or tribal agency under 40 CFR part 63, subpart E, the authorities contained in paragraph (c) of this section are retained by the Administrator of the U.S. EPA and are not transferred to the State, local, or tribal agency.

(c) The authorities that will not be delegated to State, local, or tribal agencies are:

(1) Approval of alternatives to the non-opacity emission limitations and operating limitations in § 63.6600 under § 63.6(g).

(2) Approval of major alternatives to test methods under § 63.7(e)(2)(ii) and (f) and as defined in § 63.90.

(3) Approval of major alternatives to monitoring under § 63.8(f) and as defined in § 63.90.

(4) Approval of major alternatives to recordkeeping and reporting under § 63.10(f) and as defined in § 63.90.

(5) Approval of a performance test which was conducted prior to the effective date of the rule, as specified in § 63.6610(b).

**§ 63.6675 What definitions apply to this subpart?**

Terms used in this subpart are defined in the Clean Air Act (CAA); in 40 CFR 63.2, the General Provisions of this part; and in this section as follows:

*Alaska Railbelt Grid* means the service areas of the six regulated public utilities that extend from Fairbanks to Anchorage and the Kenai Peninsula. These utilities are Golden Valley Electric Association; Chugach Electric Association; Matanuska Electric Association; Homer Electric Association; Anchorage Municipal Light & Power; and the City of Seward Electric System.

*Area source* means any stationary source of HAP that is not a major source as defined in part 63.

*Associated equipment* as used in this subpart and as referred to in section 112(n)(4) of the CAA, means equipment associated with an oil or natural gas exploration or production well, and includes all equipment from the well bore to the point of custody transfer, except glycol dehydration units, storage vessels with potential for flash emissions, combustion turbines, and stationary RICE.

*Backup power for renewable energy* means an engine that provides backup power to a facility that generates electricity from renewable energy resources, as that term is defined in Alaska Statute 42.45.045(l)(5) (incorporated by reference, see § 63.14).

*Black start engine* means an engine whose only purpose is to start up a combustion turbine.

*CAA* means the Clean Air Act (42 U.S.C. 7401 *et seq.,* as amended by Public Law 101-549, 104 Stat. 2399).

*Commercial emergency stationary RICE* means an emergency stationary RICE used in commercial establishments such as office buildings, hotels, stores, telecommunications facilities, restaurants, financial institutions such as banks, doctor's offices, and sports and performing arts facilities.

*Compression ignition* means relating to a type of stationary internal combustion engine that is not a spark ignition engine.

*Custody transfer* means the transfer of hydrocarbon liquids or natural gas: After processing and/or treatment in the producing operations, or from storage vessels or automatic transfer facilities or other such equipment, including product loading racks, to pipelines or any other forms of transportation. For the purposes of this subpart, the point at which such liquids or natural gas enters a natural gas processing plant is a point of custody transfer.

*Deviation* means any instance in which an affected source subject to this subpart, or an owner or operator of such a source:

(1) Fails to meet any requirement or obligation established by this subpart, including but not limited to any emission limitation or operating limitation;

(2) Fails to meet any term or condition that is adopted to implement an applicable requirement in this subpart and that is included in the operating permit for any affected source required to obtain such a permit; or

(3) Fails to meet any emission limitation or operating limitation in this subpart during malfunction, regardless or whether or not such failure is permitted by this subpart.

(4) Fails to satisfy the general duty to minimize emissions established by § 63.6(e)(1)(i).

*Diesel engine* means any stationary RICE in which a high boiling point liquid fuel injected into the combustion chamber ignites when the air charge has been compressed to a temperature sufficiently high for auto-ignition. This process is also known as compression ignition.

*Diesel fuel* means any liquid obtained from the distillation of petroleum with a boiling point of approximately 150 to 360 degrees Celsius. One commonly used form is fuel oil number 2. Diesel fuel also includes any non-distillate fuel with comparable physical and chemical properties ( *e.g.* biodiesel) that is suitable for use in compression ignition engines.

*Digester gas* means any gaseous by-product of wastewater treatment typically formed through the anaerobic decomposition of organic waste materials and composed principally of methane and $CO_2$ .

*Dual-fuel engine* means any stationary RICE in which a liquid fuel (typically diesel fuel) is used for compression ignition and gaseous fuel (typically natural gas) is used as the primary fuel.

*Emergency stationary RICE* means any stationary reciprocating internal combustion engine that meets all of the criteria in paragraphs (1) through (3) of this definition. All emergency stationary RICE must comply with the requirements specified in § 63.6640(f) in order to be considered emergency stationary RICE. If the engine does not comply with the requirements specified in § 63.6640(f), then it is not considered to be an emergency stationary RICE under this subpart.

(1) The stationary RICE is operated to provide electrical power or mechanical work during an emergency situation. Examples include stationary RICE used to produce power for critical networks or equipment (including power supplied to portions of a facility) when electric power from the local utility (or the normal power source, if the facility runs on its own power production) is interrupted, or stationary RICE used to pump water in the case of fire or flood, etc.

(2) The stationary RICE is operated under limited circumstances for situations not included in paragraph (1) of this definition, as specified in § 63.6640(f).

(3) The stationary RICE operates as part of a financial arrangement with another entity in situations not included in paragraph (1) of this definition only as allowed in § 63.6640(f)(2)(ii) or (iii) and § 63.6640(f)(4)(i) or (ii).

*Engine startup* means the time from initial start until applied load and engine and associated equipment reaches steady state or normal operation. For stationary engine with catalytic controls, engine startup means the time from initial start until applied load and engine and associated equipment, including the catalyst, reaches steady state or normal operation.

*Four-stroke engine* means any type of engine which completes the power cycle in two crankshaft revolutions, with intake and compression strokes in the first revolution and power and exhaust strokes in the second revolution.

*Gaseous fuel* means a material used for combustion which is in the gaseous state at standard atmospheric temperature and pressure conditions.

*Gasoline* means any fuel sold in any State for use in motor vehicles and motor vehicle engines, or nonroad or stationary engines, and commonly or commercially known or sold as gasoline.

*Glycol dehydration unit* means a device in which a liquid glycol (including, but not limited to, ethylene glycol, diethylene glycol, or triethylene glycol) absorbent directly contacts a natural gas stream and absorbs water in a contact tower or absorption column (absorber). The glycol contacts and absorbs water vapor and other gas stream constituents from the natural gas and becomes “rich” glycol. This glycol is then regenerated in the glycol dehydration unit reboiler. The “lean” glycol is then recycled.

*Hazardous air pollutants (HAP)* means any air pollutants listed in or pursuant to section 112(b) of the CAA.

*Institutional emergency stationary RICE* means an emergency stationary RICE used in institutional establishments such as medical centers, nursing homes, research centers, institutions of higher education, correctional facilities, elementary and secondary schools, libraries, religious establishments, police stations, and fire stations.

*ISO standard day conditions* means 288 degrees Kelvin (15 degrees Celsius), 60 percent relative humidity and 101.3 kilopascals pressure.

*Landfill gas* means a gaseous by-product of the land application of municipal refuse typically formed through the anaerobic decomposition of waste materials and composed principally of methane and $CO_2$ .

*Lean burn engine* means any two-stroke or four-stroke spark ignited engine that does not meet the definition of a rich burn engine.

*Limited use stationary RICE* means any stationary RICE that operates less than 100 hours per year.

*Liquefied petroleum gas* means any liquefied hydrocarbon gas obtained as a by-product in petroleum refining of natural gas production.

*Liquid fuel* means any fuel in liquid form at standard temperature and pressure, including but not limited to diesel, residual/crude oil, kerosene/naphtha (jet fuel), and gasoline.

*Major Source,* as used in this subpart, shall have the same meaning as in § 63.2, except that:

(1) Emissions from any oil or gas exploration or production well (with its associated equipment (as defined in this section)) and emissions from any pipeline compressor station or pump station shall not be aggregated with emissions from other similar units, to determine whether such emission points or stations are major sources, even when emission points are in a contiguous area or under common control;

(2) For oil and gas production facilities, emissions from processes, operations, or equipment that are not part of the same oil and gas production facility, as defined in § 63.1271 of subpart HHH of this part, shall not be aggregated;

(3) For production field facilities, only HAP emissions from glycol dehydration units, storage vessel with the potential for flash emissions, combustion turbines and reciprocating internal combustion engines shall be aggregated for a major source determination; and

(4) Emissions from processes, operations, and equipment that are not part of the same natural gas transmission and storage facility, as defined in § 63.1271 of subpart HHH of this part, shall not be aggregated.

*Malfunction* means any sudden, infrequent, and not reasonably preventable failure of air pollution control equipment, process equipment, or a process to operate in a normal or usual manner which causes, or has the potential to cause, the emission limitations in an applicable standard to be exceeded. Failures that are caused in part by poor maintenance or careless operation are not malfunctions.

*Natural gas* means a naturally occurring mixture of hydrocarbon and non-hydrocarbon gases found in geologic formations beneath the Earth's surface, of which the principal constituent is methane. Natural gas may be field or pipeline quality.

*Non-selective catalytic reduction (NSCR)* means an add-on catalytic nitrogen oxides ($NO_X$) control device for rich burn engines that, in a two-step reaction, promotes the conversion of excess oxygen, $NO_X$, CO, and volatile organic compounds (VOC) into $CO_2$, nitrogen, and water.

*Oil and gas production facility* as used in this subpart means any grouping of equipment where hydrocarbon liquids are processed, upgraded ( *i.e.,* remove impurities or other constituents to meet contract specifications), or stored prior to the point of custody transfer; or where natural gas is processed, upgraded, or stored prior to entering the natural gas transmission and storage source category. For purposes of a major source determination, facility (including a building, structure, or installation) means oil and natural gas production and processing equipment that is located within the boundaries of an individual surface site as defined in this section. Equipment that is part of a facility will typically be located within close proximity to other equipment located at the same facility. Pieces of production equipment or groupings of equipment located on different oil and gas leases, mineral fee tracts, lease tracts, subsurface or surface unit areas, surface fee tracts, surface lease tracts, or separate surface sites, whether or not connected by a road, waterway, power line or pipeline, shall not be considered part of the same facility. Examples of facilities in the oil and natural gas production source category include, but are not limited to, well sites, satellite tank batteries, central tank batteries, a compressor station that transports natural gas to a natural gas processing plant, and natural gas processing plants.

*Oxidation catalyst* means an add-on catalytic control device that controls CO and VOC by oxidation.

*Peaking unit or engine* means any standby engine intended for use during periods of high demand that are not emergencies.

*Percent load* means the fractional power of an engine compared to its maximum manufacturer's design capacity at engine site conditions. Percent load may range between 0 percent to above 100 percent.

*Potential to emit* means the maximum capacity of a stationary source to emit a pollutant under its physical and operational design. Any physical or operational limitation on the capacity of the stationary source to emit a pollutant, including air pollution control equipment and restrictions on hours of operation or on the type or amount of material combusted, stored, or processed, shall be treated as part of its design if the limitation or the effect it would have on emissions is federally enforceable. For oil and natural gas production facilities subject to subpart HH of this part, the potential to emit provisions in § 63.760(a) may be used. For natural gas transmission and storage facilities subject to subpart HHH of this part, the maximum annual facility gas throughput for storage facilities may be determined according to § 63.1270(a)(1) and the maximum annual throughput for transmission facilities may be determined according to § 63.1270(a)(2).

*Production field facility* means those oil and gas production facilities located prior to the point of custody transfer.

*Production well* means any hole drilled in the earth from which crude oil, condensate, or field natural gas is extracted.

*Propane* means a colorless gas derived from petroleum and natural gas, with the molecular structure $C_3H_8$.

*Remote stationary RICE* means stationary RICE meeting any of the following criteria:

(1) Stationary RICE located in an offshore area that is beyond the line of ordinary low water along that portion of the coast of the United States that is in direct contact with the open seas and beyond the line marking the seaward limit of inland waters.

(2) Stationary RICE located on a pipeline segment that meets both of the criteria in paragraphs (2)(i) and (ii) of this definition.

(i) A pipeline segment with 10 or fewer buildings intended for human occupancy and no buildings with four or more stories within 220 yards (200 meters) on either side of the centerline of any continuous 1-mile (1.6 kilometers) length of pipeline. Each separate dwelling unit in a multiple dwelling unit building is counted as a separate building intended for human occupancy.

(ii) The pipeline segment does not lie within 100 yards (91 meters) of either a building or a small, well-defined outside area (such as a playground, recreation area, outdoor theater, or other place of public assembly) that is occupied by 20 or more persons on at least 5 days a week for 10 weeks in any 12-month period. The days and weeks need not be consecutive. The building or area is considered occupied for a full day if it is occupied for any portion of the day.

(iii) For purposes of this paragraph (2), the term pipeline segment means all parts of those physical facilities through which gas moves in transportation, including but not limited to pipe, valves, and other appurtenance attached to pipe, compressor units, metering stations, regulator stations, delivery stations, holders, and fabricated assemblies. Stationary RICE located within 50 yards (46 meters) of the pipeline segment providing power for equipment on a pipeline segment are part of the pipeline segment. Transportation of gas means the gathering, transmission, or distribution of gas by pipeline, or the storage of gas. A building is intended for human occupancy if its primary use is for a purpose involving the presence of humans.

(3) Stationary RICE that are not located on gas pipelines and that have 5 or fewer buildings intended for human occupancy and no buildings with four or more stories within a 0.25 mile radius around the engine. A building is intended for human occupancy if its primary use is for a purpose involving the presence of humans.

*Residential emergency stationary RICE* means an emergency stationary RICE used in residential establishments such as homes or apartment buildings.

*Responsible official* means responsible official as defined in 40 CFR 70.2.

*Rich burn engine* means any four-stroke spark ignited engine where the manufacturer's recommended operating air/fuel ratio divided by the stoichiometric air/fuel ratio at full load conditions is less than or equal to 1.1. Engines originally manufactured as rich burn engines, but modified prior to December 19, 2002 with passive emission control technology for $NO_X$ (such as pre-combustion chambers) will be considered lean burn engines. Also, existing engines where there are no manufacturer's recommendations regarding air/fuel ratio will be considered a rich burn engine if the excess oxygen content of the exhaust at full load conditions is less than or equal to 2 percent.

*Site-rated HP* means the maximum manufacturer's design capacity at engine site conditions.

*Spark ignition* means relating to either: A gasoline-fueled engine; or any other type of engine with a spark plug (or other sparking device) and with operating characteristics significantly similar to the theoretical Otto combustion cycle. Spark ignition engines usually use a throttle to regulate intake air flow to control power during normal operation. Dual-fuel engines in which a liquid fuel (typically diesel fuel) is used for CI and gaseous fuel (typically natural gas) is used as the primary fuel at an annual average ratio of less than 2 parts diesel fuel to 100 parts total fuel on an energy equivalent basis are spark ignition engines.

*Stationary reciprocating internal combustion engine (RICE)* means any reciprocating internal combustion engine which uses reciprocating motion to convert heat energy into mechanical work and which is not mobile. Stationary RICE differ from mobile RICE in that a stationary RICE is not a non-road engine as defined at 40 CFR 1068.30, and is not used to propel a motor vehicle or a vehicle used solely for competition.

*Stationary RICE test cell/stand* means an engine test cell/stand, as defined in subpart PPPPP of this part, that tests stationary RICE.

*Stoichiometric* means the theoretical air-to-fuel ratio required for complete combustion.

*Storage vessel with the potential for flash emissions* means any storage vessel that contains a hydrocarbon liquid with a stock tank gas-to-oil ratio equal to or greater than 0.31 cubic meters per liter and an American Petroleum

Institute gravity equal to or greater than 40 degrees and an actual annual average hydrocarbon liquid throughput equal to or greater than 79,500 liters per day. Flash emissions occur when dissolved hydrocarbons in the fluid evolve from solution when the fluid pressure is reduced.

*Subpart* means 40 CFR part 63, subpart ZZZZ.

*Surface site* means any combination of one or more graded pad sites, gravel pad sites, foundations, platforms, or the immediate physical location upon which equipment is physically affixed.

*Two-stroke engine* means a type of engine which completes the power cycle in single crankshaft revolution by combining the intake and compression operations into one stroke and the power and exhaust operations into a second stroke. This system requires auxiliary scavenging and inherently runs lean of stoichiometric.

[69 FR 33506, June 15, 2004, as amended at 71 FR 20467, Apr. 20, 2006; 73 FR 3607, Jan. 18, 2008; 75 FR 9679, Mar. 3, 2010; 75 FR 51592, Aug. 20, 2010; 76 FR 12867, Mar. 9, 2011; 78 FR 6706, Jan. 30, 2013]

**Table 1 a to Subpart ZZZZ of Part 63—Emission Limitations for Existing, New, and Reconstructed Spark Ignition, 4SRB Stationary RICE > 500 HP Located at a Major Source of HAP Emissions**

As stated in §§ 63.6600 and 63.6640, you must comply with the following emission limitations at 100 percent load plus or minus 10 percent for existing, new and reconstructed 4SRB stationary RICE >500 HP located at a major source of HAP emissions:

| For each . . . | You must meet the following emission limitation, except during periods of startup . . . | During periods of startup you must . . . |
|---|---|---|
| 1. 4SRB stationary RICE | a. Reduce formaldehyde emissions by 76 percent or more. If you commenced construction or reconstruction between December 19, 2002 and June 15, 2004, you may reduce formaldehyde emissions by 75 percent or more until June 15, 2007 or | Minimize the engine's time spent at idle and minimize the engine's startup time at startup to a period needed for appropriate and safe loading of the engine, not to exceed 30 minutes, after which time the non-startup emission limitations apply.[1] |
| | b. Limit the concentration of formaldehyde in the stationary RICE exhaust to 350 ppbvd or less at 15 percent $O_2$ | |

[1]Sources can petition the Administrator pursuant to the requirements of 40 CFR 63.6(g) for alternative work practices.

[75 FR 9679, Mar. 3, 2010, as amended at 75 FR 51592, Aug. 20, 2010]

**Table 1 b to Subpart ZZZZ of Part 63—Operating Limitations for Existing, New, and Reconstructed SI 4SRB Stationary RICE >500 HP Located at a Major Source of HAP Emissions**

As stated in §§ 63.6600, 63.6603, 63.6630 and 63.6640, you must comply with the following operating limitations for existing, new and reconstructed 4SRB stationary RICE >500 HP located at a major source of HAP emissions:

| For each . . . | You must meet the following operating limitation, except during periods of startup . . . |
|---|---|
| 1. existing, new and reconstructed 4SRB stationary RICE >500 HP located at a major source of HAP emissions complying with the requirement to reduce formaldehyde emissions by 76 percent or more (or by 75 percent or more, if applicable) and using NSCR; or<br>existing, new and reconstructed 4SRB stationary RICE >500 HP located at a major source of HAP emissions complying with the requirement to limit the concentration of formaldehyde in the stationary RICE exhaust to 350 ppbvd or less at 15 percent $O_2$and using NSCR; | a. maintain your catalyst so that the pressure drop across the catalyst does not change by more than 2 inches of water at 100 percent load plus or minus 10 percent from the pressure drop across the catalyst measured during the initial performance test; and<br>b. maintain the temperature of your stationary RICE exhaust so that the catalyst inlet temperature is greater than or equal to 750 °F and less than or equal to 1250 °F.[1] |
| 2. existing, new and reconstructed 4SRB stationary RICE >500 HP located at a major source of HAP emissions complying with the requirement to reduce formaldehyde emissions by 76 percent or more (or by 75 percent or more, if applicable) and not using NSCR; or | Comply with any operating limitations approved by the Administrator. |
| existing, new and reconstructed 4SRB stationary RICE >500 HP located at a major source of HAP emissions complying with the requirement to limit the concentration of formaldehyde in the stationary RICE exhaust to 350 ppbvd or less at 15 percent $O_2$and not using NSCR. | |

[1] Sources can petition the Administrator pursuant to the requirements of 40 CFR 63.8(f) for a different temperature range.

[78 FR 6706, Jan. 30, 2013]

**Table 2 a to Subpart ZZZZ of Part 63—Emission Limitations for New and Reconstructed 2SLB and Compression Ignition Stationary RICE >500 HP and New and Reconstructed 4SLB Stationary RICE ≥250 HP Located at a Major Source of HAP Emissions**

As stated in §§ 63.6600 and 63.6640, you must comply with the following emission limitations for new and reconstructed lean burn and new and reconstructed compression ignition stationary RICE at 100 percent load plus or minus 10 percent:

| For each . . . | You must meet the following emission limitation, except during periods of startup . . . | During periods of startup you must . . . |
|---|---|---|
| 1. 2SLB stationary RICE | a. Reduce CO emissions by 58 percent or more; or<br>b. Limit concentration of formaldehyde in the stationary RICE exhaust to 12 ppmvd or less at 15 percent $O_2$. If you commenced construction or reconstruction between December 19, 2002 and June 15, 2004, you may limit concentration of formaldehyde to 17 ppmvd or less at 15 percent $O_2$until June 15, 2007 | Minimize the engine's time spent at idle and minimize the engine's startup time at startup to a period needed for appropriate and safe loading of the engine, not to exceed 30 minutes, after which time the non-startup emission limitations apply.[1] |
| 2. 4SLB stationary RICE | a. Reduce CO emissions by 93 percent or more; or | |
| | b. Limit concentration of formaldehyde in the stationary RICE exhaust to 14 ppmvd or less at 15 percent $O_2$ | |

| For each . . . | You must meet the following emission limitation, except during periods of startup . . . | During periods of startup you must . . . |
|---|---|---|
| 3. CI stationary RICE | a. Reduce CO emissions by 70 percent or more; or | |
| | b. Limit concentration of formaldehyde in the stationary RICE exhaust to 580 ppbvd or less at 15 percent $O_2$ | |

[1] Sources can petition the Administrator pursuant to the requirements of 40 CFR 63.6(g) for alternative work practices.

[75 FR 9680, Mar. 3, 2010]

**Table 2 b to Subpart ZZZZ of Part 63—Operating Limitations for New and Reconstructed 2SLB and CI Stationary RICE >500 HP Located at a Major Source of HAP Emissions, New and Reconstructed 4SLB Stationary RICE ≥250 HP Located at a Major Source of HAP Emissions, Existing CI Stationary RICE >500 HP**

As stated in §§ 63.6600, 63.6601, 63.6603, 63.6630, and 63.6640, you must comply with the following operating limitations for new and reconstructed 2SLB and CI stationary RICE >500 HP located at a major source of HAP emissions; new and reconstructed 4SLB stationary RICE ≥250 HP located at a major source of HAP emissions; and existing CI stationary RICE >500 HP:

| For each . . . | You must meet the following operating limitation, except during periods of startup . . . |
|---|---|
| 1. New and reconstructed 2SLB and CI stationary RICE >500 HP located at a major source of HAP emissions and new and reconstructed 4SLB stationary RICE ≥250 HP located at a major source of HAP emissions complying with the requirement to reduce CO emissions and using an oxidation catalyst; and New and reconstructed 2SLB and CI stationary RICE >500 HP located at a major source of HAP emissions and new and reconstructed 4SLB stationary RICE ≥250 HP located at a major source of HAP emissions complying with the requirement to limit the concentration of formaldehyde in the stationary RICE exhaust and using an oxidation catalyst. | a. maintain your catalyst so that the pressure drop across the catalyst does not change by more than 2 inches of water at 100 percent load plus or minus 10 percent from the pressure drop across the catalyst that was measured during the initial performance test; and<br>b. maintain the temperature of your stationary RICE exhaust so that the catalyst inlet temperature is greater than or equal to 450 °F and less than or equal to 1350 °F.[1] |
| 2. Existing CI stationary RICE >500 HP complying with the requirement to limit or reduce the concentration of CO in the stationary RICE exhaust and using an oxidation catalyst | a. maintain your catalyst so that the pressure drop across the catalyst does not change by more than 2 inches of water from the pressure drop across the catalyst that was measured during the initial performance test; and |
| | b. maintain the temperature of your stationary RICE exhaust so that the catalyst inlet temperature is greater than or equal to 450 °F and less than or equal to 1350 °F.[1] |
| 3. New and reconstructed 2SLB and CI stationary RICE >500 HP located at a major source of HAP emissions and new and reconstructed 4SLB stationary RICE ≥250 HP located at a major source of HAP emissions complying with the requirement to reduce CO emissions and not using an oxidation catalyst; and | Comply with any operating limitations approved by the Administrator. |
| New and reconstructed 2SLB and CI stationary RICE >500 HP located at a major source of HAP emissions and new and reconstructed 4SLB stationary RICE ≥250 HP located at a major source of HAP emissions complying with the requirement to limit the concentration of formaldehyde in the stationary RICE exhaust and not using an oxidation catalyst; and | |

| For each . . . | You must meet the following operating limitation, except during periods of startup . . . |
|---|---|
| existing CI stationary RICE >500 HP complying with the requirement to limit or reduce the concentration of CO in the stationary RICE exhaust and not using an oxidation catalyst. | |

[1] Sources can petition the Administrator pursuant to the requirements of 40 CFR 63.8(f) for a different temperature range.

[78 FR 6707, Jan. 30, 2013]

**Table 2 c to Subpart ZZZZ of Part 63—Requirements for Existing Compression Ignition Stationary RICE Located at a Major Source of HAP Emissions and Existing Spark Ignition Stationary RICE ≤500 HP Located at a Major Source of HAP Emissions**

As stated in §§ 63.6600, 63.6602, and 63.6640, you must comply with the following requirements for existing compression ignition stationary RICE located at a major source of HAP emissions and existing spark ignition stationary RICE ≤500 HP located at a major source of HAP emissions:

| For each . . . | You must meet the following requirement, except during periods of startup . . . | During periods of startup you must . . . |
|---|---|---|
| 1. Emergency stationary CI RICE and black start stationary CI RICE [1] | a. Change oil and filter every 500 hours of operation or annually, whichever comes first.[2]<br>b. Inspect air cleaner every 1,000 hours of operation or annually, whichever comes first, and replace as necessary;<br>c. Inspect all hoses and belts every 500 hours of operation or annually, whichever comes first, and replace as necessary.[3] | Minimize the engine's time spent at idle and minimize the engine's startup time at startup to a period needed for appropriate and safe loading of the engine, not to exceed 30 minutes, after which time the non-startup emission limitations apply.[3] |
| 2. Non-Emergency, non-black start stationary CI RICE <100 HP | a. Change oil and filter every 1,000 hours of operation or annually, whichever comes first.[2]<br>b. Inspect air cleaner every 1,000 hours of operation or annually, whichever comes first, and replace as necessary;<br>c. Inspect all hoses and belts every 500 hours of operation or annually, whichever comes first, and replace as necessary.[3] | |
| 3. Non-Emergency, non-black start CI stationary RICE 100≤HP≤300 HP | Limit concentration of CO in the stationary RICE exhaust to 230 ppmvd or less at 15 percent $O_2$. | |

| For each . . . | You must meet the following requirement, except during periods of startup . . . | During periods of startup you must . . . |
|---|---|---|
| 4. Non-Emergency, non-black start CI stationary RICE 300<HP≤500 | a. Limit concentration of CO in the stationary RICE exhaust to 49 ppmvd or less at 15 percent $O_2$; or<br>b. Reduce CO emissions by 70 percent or more. | |
| 5. Non-Emergency, non-black start stationary CI RICE >500 HP | a. Limit concentration of CO in the stationary RICE exhaust to 23 ppmvd or less at 15 percent $O_2$; or<br>b. Reduce CO emissions by 70 percent or more. | |
| 6. Emergency stationary SI RICE and black start stationary SI RICE.[1] | a. Change oil and filter every 500 hours of operation or annually, whichever comes first;[2]<br>b. Inspect spark plugs every 1,000 hours of operation or annually, whichever comes first, and replace as necessary;<br>c. Inspect all hoses and belts every 500 hours of operation or annually, whichever comes first, and replace as necessary.[3] | |
| 7. Non-Emergency, non-black start stationary SI RICE <100 HP that are not 2SLB stationary RICE | a. Change oil and filter every 1,440 hours of operation or annually, whichever comes first;[2]<br>b. Inspect spark plugs every 1,440 hours of operation or annually, whichever comes first, and replace as necessary; | |
| | c. Inspect all hoses and belts every 1,440 hours of operation or annually, whichever comes first, and replace as necessary.[3] | |
| 8. Non-Emergency, non-black start 2SLB stationary SI RICE <100 HP | a. Change oil and filter every 4,320 hours of operation or annually, whichever comes first;[2]<br>b. Inspect spark plugs every 4,320 hours of operation or annually, whichever comes first, and replace as necessary; | |
| | c. Inspect all hoses and belts every 4,320 hours of operation or annually, whichever comes first, and replace as necessary.[3] | |

| For each . . . | You must meet the following requirement, except during periods of startup . . . | During periods of startup you must . . . |
|---|---|---|
| 9. Non-emergency, non-black start 2SLB stationary RICE 100≤HP≤500 | Limit concentration of CO in the stationary RICE exhaust to 225 ppmvd or less at 15 percent $O_2$. | |
| 10. Non-emergency, non-black start 4SLB stationary RICE 100≤HP≤500 | Limit concentration of CO in the stationary RICE exhaust to 47 ppmvd or less at 15 percent $O_2$. | |
| 11. Non-emergency, non-black start 4SRB stationary RICE 100≤HP≤500 | Limit concentration of formaldehyde in the stationary RICE exhaust to 10.3 ppmvd or less at 15 percent $O_2$. | |
| 12. Non-emergency, non-black start stationary RICE 100≤HP≤500 which combusts landfill or digester gas equivalent to 10 percent or more of the gross heat input on an annual basis | Limit concentration of CO in the stationary RICE exhaust to 177 ppmvd or less at 15 percent $O_2$. | |

[1] If an emergency engine is operating during an emergency and it is not possible to shut down the engine in order to perform the work practice requirements on the schedule required in Table 2c of this subpart, or if performing the work practice on the required schedule would otherwise pose an unacceptable risk under federal, state, or local law, the work practice can be delayed until the emergency is over or the unacceptable risk under federal, state, or local law has abated. The work practice should be performed as soon as practicable after the emergency has ended or the unacceptable risk under federal, state, or local law has abated. Sources must report any failure to perform the work practice on the schedule required and the federal, state or local law under which the risk was deemed unacceptable.

[2] Sources have the option to utilize an oil analysis program as described in § 63.6625(i) or (j) in order to extend the specified oil change requirement in Table 2c of this subpart.

[3] Sources can petition the Administrator pursuant to the requirements of 40 CFR 63.6(g) for alternative work practices.

[78 FR 6708, Jan. 30, 2013, as amended at 78 FR 14457, Mar. 6, 2013]

**Table 2 d to Subpart ZZZZ of Part 63—Requirements for Existing Stationary RICE Located at Area Sources of HAP Emissions**

As stated in §§ 63.6603 and 63.6640, you must comply with the following requirements for existing stationary RICE located at area sources of HAP emissions:

| For each . . . | You must meet the following requirement, except during periods of startup . . . | During periods of startup you must . . . |
|---|---|---|
| 1. Non-Emergency, non-black start CI stationary RICE ≤300 HP | a. Change oil and filter every 1,000 hours of operation or annually, whichever comes first;[1]<br>b. Inspect air cleaner every 1,000 hours of operation or annually, whichever comes first, and replace as necessary;<br>c. Inspect all hoses and belts every 500 hours of operation or annually, whichever comes first, and replace as necessary. | Minimize the engine's time spent at idle and minimize the engine's startup time at startup to a period needed for appropriate and safe loading of the engine, not to exceed 30 minutes, after which time the non-startup emission limitations apply. |
| 2. Non-Emergency, non-black start CI stationary RICE 300<HP≤500 | a. Limit concentration of CO in the stationary RICE exhaust to 49 ppmvd at 15 percent $O_2$; or | |
| | b. Reduce CO emissions by 70 percent or more. | |
| 3. Non-Emergency, non-black start CI stationary RICE >500 HP | a. Limit concentration of CO in the stationary RICE exhaust to 23 ppmvd at 15 percent $O_2$; or | |
| | b. Reduce CO emissions by 70 percent or more. | |
| 4. Emergency stationary CI RICE and black start stationary CI RICE.[2] | a. Change oil and filter every 500 hours of operation or annually, whichever comes first;[1] | |
| | b. Inspect air cleaner every 1,000 hours of operation or annually, whichever comes first, and replace as necessary; and | |
| | c. Inspect all hoses and belts every 500 hours of operation or annually, whichever comes first, and replace as necessary. | |

| For each . . . | You must meet the following requirement, except during periods of startup . . . | During periods of startup you must . . . |
|---|---|---|
| 5. Emergency stationary SI RICE; black start stationary SI RICE; non-emergency, non-black start 4SLB stationary RICE >500 HP that operate 24 hours or less per calendar year; non-emergency, non-black start 4SRB stationary RICE >500 HP that operate 24 hours or less per calendar year.[2] | a. Change oil and filter every 500 hours of operation or annually, whichever comes first;[1]; b. Inspect spark plugs every 1,000 hours of operation or annually, whichever comes first, and replace as necessary; and c. Inspect all hoses and belts every 500 hours of operation or annually, whichever comes first, and replace as necessary. | |
| 6. Non-emergency, non-black start 2SLB stationary RICE | a. Change oil and filter every 4,320 hours of operation or annually, whichever comes first;[1] | |
| | b. Inspect spark plugs every 4,320 hours of operation or annually, whichever comes first, and replace as necessary; and | |
| | c. Inspect all hoses and belts every 4,320 hours of operation or annually, whichever comes first, and replace as necessary. | |
| 7. Non-emergency, non-black start 4SLB stationary RICE ≤500 HP | a. Change oil and filter every 1,440 hours of operation or annually, whichever comes first;[1] | |
| | b. Inspect spark plugs every 1,440 hours of operation or annually, whichever comes first, and replace as necessary; and | |
| | c. Inspect all hoses and belts every 1,440 hours of operation or annually, whichever comes first, and replace as necessary. | |
| 8. Non-emergency, non-black start 4SLB remote stationary RICE >500 HP | a. Change oil and filter every 2,160 hours of operation or annually, whichever comes first;[1] | |
| | b. Inspect spark plugs every 2,160 hours of operation or annually, whichever comes first, and replace as necessary; and | |

| For each . . . | You must meet the following requirement, except during periods of startup . . . | During periods of startup you must . . . |
|---|---|---|
| | c. Inspect all hoses and belts every 2,160 hours of operation or annually, whichever comes first, and replace as necessary. | |
| 9. Non-emergency, non-black start 4SLB stationary RICE >500 HP that are not remote stationary RICE and that operate more than 24 hours per calendar year | Install an oxidation catalyst to reduce HAP emissions from the stationary RICE. | |
| 10. Non-emergency, non-black start 4SRB stationary RICE ≤500 HP | a. Change oil and filter every 1,440 hours of operation or annually, whichever comes first;[1] | |
| | b. Inspect spark plugs every 1,440 hours of operation or annually, whichever comes first, and replace as necessary; and | |
| | c. Inspect all hoses and belts every 1,440 hours of operation or annually, whichever comes first, and replace as necessary. | |
| 11. Non-emergency, non-black start 4SRB remote stationary RICE >500 HP | a. Change oil and filter every 2,160 hours of operation or annually, whichever comes first;[1] | |
| | b. Inspect spark plugs every 2,160 hours of operation or annually, whichever comes first, and replace as necessary; and | |
| | c. Inspect all hoses and belts every 2,160 hours of operation or annually, whichever comes first, and replace as necessary. | |
| 12. Non-emergency, non-black start 4SRB stationary RICE >500 HP that are not remote stationary RICE and that operate more than 24 hours per calendar year | Install NSCR to reduce HAP emissions from the stationary RICE. | |
| 13. Non-emergency, non-black start stationary RICE which combusts landfill or digester gas equivalent to 10 percent or more of the gross heat input on an annual basis | a. Change oil and filter every 1,440 hours of operation or annually, whichever comes first;[1]<br>b. Inspect spark plugs every 1,440 hours of operation or annually, whichever comes first, and replace as necessary; and | |

| For each . . . | You must meet the following requirement, except during periods of startup . . . | During periods of startup you must . . . |
|---|---|---|
| | c. Inspect all hoses and belts every 1,440 hours of operation or annually, whichever comes first, and replace as necessary. | |

[1] Sources have the option to utilize an oil analysis program as described in § 63.6625(i) or (j) in order to extend the specified oil change requirement in Table 2d of this subpart.

[2] If an emergency engine is operating during an emergency and it is not possible to shut down the engine in order to perform the management practice requirements on the schedule required in Table 2d of this subpart, or if performing the management practice on the required schedule would otherwise pose an unacceptable risk under federal, state, or local law, the management practice can be delayed until the emergency is over or the unacceptable risk under federal, state, or local law has abated. The management practice should be performed as soon as practicable after the emergency has ended or the unacceptable risk under federal, state, or local law has abated. Sources must report any failure to perform the management practice on the schedule required and the federal, state or local law under which the risk was deemed unacceptable.

[78 FR 6709, Jan. 30, 2013]

**Table 3 to Subpart ZZZZ of Part 63—Subsequent Performance Tests**

As stated in §§ 63.6615 and 63.6620, you must comply with the following subsequent performance test requirements:

| For each . . . | Complying with the requirement to . . . | You must . . . |
|---|---|---|
| 1. New or reconstructed 2SLB stationary RICE >500 HP located at major sources; new or reconstructed 4SLB stationary RICE ≥250 HP located at major sources; and new or reconstructed CI stationary RICE >500 HP located at major sources | Reduce CO emissions and not using a CEMS | Conduct subsequent performance tests semiannually.[1] |
| 2. 4SRB stationary RICE ≥5,000 HP located at major sources | Reduce formaldehyde emissions | Conduct subsequent performance tests semiannually.[1] |
| 3. Stationary RICE >500 HP located at major sources and new or reconstructed 4SLB stationary RICE 250≤HP≤500 located at major sources | Limit the concentration of formaldehyde in the stationary RICE exhaust | Conduct subsequent performance tests semiannually.[1] |
| 4. Existing non-emergency, non-black start CI stationary RICE >500 HP that are not limited use stationary RICE | Limit or reduce CO emissions and not using a CEMS | Conduct subsequent performance tests every 8,760 hours or 3 years, whichever comes first. |
| 5. Existing non-emergency, non-black start CI stationary RICE >500 HP that are limited use stationary RICE | Limit or reduce CO emissions and not using a CEMS | Conduct subsequent performance tests every 8,760 hours or 5 years, whichever comes first. |

[1] After you have demonstrated compliance for two consecutive tests, you may reduce the frequency of subsequent performance tests to annually. If the results of any subsequent annual performance test indicate the stationary RICE is not in compliance with the CO or formaldehyde emission limitation, or you deviate from any of your operating limitations, you must resume semiannual performance tests.

[78 FR 6711, Jan. 30, 2013]

**Table 4 to Subpart ZZZZ of Part 63—Requirements for Performance Tests**

As stated in §§ 63.6610, 63.6611, 63.6612, 63.6620, and 63.6640, you must comply with the following requirements for performance tests for stationary RICE:

| For each . . . | Complying with the requirement to . . . | You must . . . | Using . . . | According to the following requirements . . . |
|---|---|---|---|---|
| 1. 2SLB, 4SLB, and CI stationary RICE | a. reduce CO emissions | i. Measure the $O_2$ at the inlet and outlet of the control device; and | (1) Method 3 or 3A or 3B of 40 CFR part 60, appendix A, or ASTM Method D6522-00 (Reapproved 2005).[a c] | (a) Measurements to determine $O_2$ must be made at the same time as the measurements for CO concentration. |
| | | ii. Measure the CO at the inlet and the outlet of the control device | (1) ASTM D6522-00 (Reapproved 2005) [a b c] or Method 10 of 40 CFR part 60, appendix A | (a) The CO concentration must be at 15 percent $O_2$, dry basis. |
| 2. 4SRB stationary RICE | a. reduce formaldehyde emissions | i. Select the sampling port location and the number of traverse points; and | (1) Method 1 or 1A of 40 CFR part 60, appendix A § 63.7(d)(1)(i) | (a) sampling sites must be located at the inlet and outlet of the control device. |
| | | ii. Measure $O_2$ at the inlet and outlet of the control device; and | (1) Method 3 or 3A or 3B of 40 CFR part 60, appendix A, or ASTM Method D6522-00 (Reapproved 2005).[a] | (a) measurements to determine $O_2$ concentration must be made at the same time as the measurements for formaldehyde or THC concentration. |
| | | iii. Measure moisture content at the inlet and outlet of the control device; and | (1) Method 4 of 40 CFR part 60, appendix A, or Test Method 320 of 40 CFR part 63, appendix A, or ASTM D 6348-03.[a] | (a) measurements to determine moisture content must be made at the same time and location as the measurements for formaldehyde or THC concentration. |
| | | iv. If demonstrating compliance with the formaldehyde percent reduction requirement, measure formaldehyde at the inlet and the outlet of the control device | (1) Method 320 or 323 of 40 CFR part 63, appendix A; or ASTM D6348-03,[a] provided in ASTM D6348-03 Annex A5 (Analyte Spiking Technique), the percent R must be greater than or equal to 70 and less than or equal to 130 | (a) formaldehyde concentration must be at 15 percent $O_2$, dry basis. Results of this test consist of the average of the three 1-hour or longer runs. |
| | | v. If demonstrating compliance with the THC percent reduction requirement, measure THC at the inlet and the outlet of the control device | (1) Method 25A, reported as propane, of 40 CFR part 60, appendix A | (a) THC concentration must be at 15 percent $O_2$, dry basis. Results of this test consist of the average of the three 1-hour or longer runs. |
| 3. Stationary RICE | a. limit the concentration of formaldehyde or CO in the stationary RICE exhaust | i. Select the sampling port location and the number of traverse points; and | (1) Method 1 or 1A of 40 CFR part 60, appendix A § 63.7(d)(1)(i) | (a) if using a control device, the sampling site must be located at the outlet of the control device. |

| For each . . . | Complying with the requirement to . . . | You must . . . | Using . . . | According to the following requirements . . . |
|---|---|---|---|---|
| | | ii. Determine the $O_2$concentration of the stationary RICE exhaust at the sampling port location; and | (1) Method 3 or 3A or 3B of 40 CFR part 60, appendix A, or ASTM Method D6522-00 (Reapproved 2005).[a] | (a) measurements to determine $O_2$concentration must be made at the same time and location as the measurements for formaldehyde or CO concentration. |
| | | iii. Measure moisture content of the stationary RICE exhaust at the sampling port location; and | (1) Method 4 of 40 CFR part 60, appendix A, or Test Method 320 of 40 CFR part 63, appendix A, or ASTM D 6348-03.[a] | (a) measurements to determine moisture content must be made at the same time and location as the measurements for formaldehyde or CO concentration. |
| | | iv. Measure formaldehyde at the exhaust of the stationary RICE; or | (1) Method 320 or 323 of 40 CFR part 63, appendix A; or ASTM D6348-03,[a]provided in ASTM D6348-03 Annex A5 (Analyte Spiking Technique), the percent R must be greater than or equal to 70 and less than or equal to 130 | (a) Formaldehyde concentration must be at 15 percent $O_2$, dry basis. Results of this test consist of the average of the three 1-hour or longer runs. |
| | | v. measure CO at the exhaust of the stationary RICE. | (1) Method 10 of 40 CFR part 60, appendix A, ASTM Method D6522-00 (2005),[a] [c]Method 320 of 40 CFR part 63, appendix A, or ASTM D6348-03.[a] | (a) CO concentration must be at 15 percent $O_2$, dry basis. Results of this test consist of the average of the three 1-hour or longer runs. |

[a] Incorporated by reference, see 40 CFR 63.14. You may also obtain copies from University Microfilms International, 300 North Zeeb Road, Ann Arbor, MI 48106.

[b] You may also use Method 320 of 40 CFR part 63, appendix A, or ASTM D6348-03.

[c] ASTM-D6522-00 (2005) may be used to test both CI and SI stationary RICE.

[78 FR 6711, Jan. 30, 2013]

**Table 5 to Subpart ZZZZ of Part 63—Initial Compliance With Emission Limitations, Operating Limitations, and Other Requirements**

As stated in §§ 63.6612, 63.6625 and 63.6630, you must initially comply with the emission and operating limitations as required by the following:

| For each . . . | Complying with the requirement to . . . | You have demonstrated initial compliance if . . . |
|---|---|---|
| 1. New or reconstructed non-emergency 2SLB stationary RICE >500 HP located at a major source of HAP, new or reconstructed non-emergency 4SLB stationary RICE ≥250 HP located at a major source of HAP, non-emergency stationary CI RICE >500 HP located at a major source of HAP, and existing non-emergency stationary CI RICE >500 HP located at an area source of HAP | a. Reduce CO emissions and using oxidation catalyst, and using a CPMS | i. The average reduction of emissions of CO determined from the initial performance test achieves the required CO percent reduction; and<br>ii. You have installed a CPMS to continuously monitor catalyst inlet temperature according to the requirements in § 63.6625(b); and<br>iii. You have recorded the catalyst pressure drop and catalyst inlet temperature during the initial performance test. |
| 2. Non-emergency stationary CI RICE >500 HP located at a major source of HAP, and existing non-emergency stationary CI RICE >500 HP located at an area source of HAP | a. Limit the concentration of CO, using oxidation catalyst, and using a CPMS | i. The average CO concentration determined from the initial performance test is less than or equal to the CO emission limitation; and |
| | | ii. You have installed a CPMS to continuously monitor catalyst inlet temperature according to the requirements in § 63.6625(b); and |
| | | iii. You have recorded the catalyst pressure drop and catalyst inlet temperature during the initial performance test. |
| 3. New or reconstructed non-emergency 2SLB stationary RICE >500 HP located at a major source of HAP, new or reconstructed non-emergency 4SLB stationary RICE ≥250 HP located at a major source of HAP, non-emergency stationary CI RICE >500 HP located at a major source of HAP, and existing non-emergency stationary CI RICE >500 HP located at an area source of HAP | a. Reduce CO emissions and not using oxidation catalyst | i. The average reduction of emissions of CO determined from the initial performance test achieves the required CO percent reduction; and<br>ii. You have installed a CPMS to continuously monitor operating parameters approved by the Administrator (if any) according to the requirements in § 63.6625(b); and<br>iii. You have recorded the approved operating parameters (if any) during the initial performance test. |
| 4. Non-emergency stationary CI RICE >500 HP located at a major source of HAP, and existing non-emergency stationary CI RICE >500 HP located at an area source of HAP | a. Limit the concentration of CO, and not using oxidation catalyst | i. The average CO concentration determined from the initial performance test is less than or equal to the CO emission limitation; and<br>ii. You have installed a CPMS to continuously monitor operating parameters approved by the Administrator (if any) according to the requirements in § 63.6625(b); and |
| | | iii. You have recorded the approved operating parameters (if any) during the initial performance test. |

| For each . . . | Complying with the requirement to . . . | You have demonstrated initial compliance if . . . |
|---|---|---|
| 5. New or reconstructed non-emergency 2SLB stationary RICE >500 HP located at a major source of HAP, new or reconstructed non-emergency 4SLB stationary RICE ≥250 HP located at a major source of HAP, non-emergency stationary CI RICE >500 HP located at a major source of HAP, and existing non-emergency stationary CI RICE >500 HP located at an area source of HAP | a. Reduce CO emissions, and using a CEMS | i. You have installed a CEMS to continuously monitor CO and either $O_2$or $CO_2$at both the inlet and outlet of the oxidation catalyst according to the requirements in § 63.6625(a); and<br>ii. You have conducted a performance evaluation of your CEMS using PS 3 and 4A of 40 CFR part 60, appendix B; and |
| | | iii. The average reduction of CO calculated using § 63.6620 equals or exceeds the required percent reduction. The initial test comprises the first 4-hour period after successful validation of the CEMS. Compliance is based on the average percent reduction achieved during the 4-hour period. |
| 6. Non-emergency stationary CI RICE >500 HP located at a major source of HAP, and existing non-emergency stationary CI RICE >500 HP located at an area source of HAP | a. Limit the concentration of CO, and using a CEMS | i. You have installed a CEMS to continuously monitor CO and either $O_2$or $CO_2$at the outlet of the oxidation catalyst according to the requirements in § 63.6625(a); and |
| | | ii. You have conducted a performance evaluation of your CEMS using PS 3 and 4A of 40 CFR part 60, appendix B; and |
| | | iii. The average concentration of CO calculated using § 63.6620 is less than or equal to the CO emission limitation. The initial test comprises the first 4-hour period after successful validation of the CEMS. Compliance is based on the average concentration measured during the 4-hour period. |
| 7. Non-emergency 4SRB stationary RICE >500 HP located at a major source of HAP | a. Reduce formaldehyde emissions and using NSCR | i. The average reduction of emissions of formaldehyde determined from the initial performance test is equal to or greater than the required formaldehyde percent reduction, or the average reduction of emissions of THC determined from the initial performance test is equal to or greater than 30 percent; and |
| | | ii. You have installed a CPMS to continuously monitor catalyst inlet temperature according to the requirements in § 63.6625(b); and |
| | | iii. You have recorded the catalyst pressure drop and catalyst inlet temperature during the initial performance test. |
| 8. Non-emergency 4SRB stationary RICE >500 HP located at a major source of HAP | a. Reduce formaldehyde emissions and not using NSCR | i. The average reduction of emissions of formaldehyde determined from the initial performance test is equal to or greater than the required formaldehyde percent reduction or the average reduction of emissions of THC determined from the initial performance test is equal to or greater than 30 percent; and |

| For each . . . | Complying with the requirement to . . . | You have demonstrated initial compliance if . . . |
|---|---|---|
| | | ii. You have installed a CPMS to continuously monitor operating parameters approved by the Administrator (if any) according to the requirements in § 63.6625(b); and |
| | | iii. You have recorded the approved operating parameters (if any) during the initial performance test. |
| 9. New or reconstructed non-emergency stationary RICE >500 HP located at a major source of HAP, new or reconstructed non-emergency 4SLB stationary RICE 250≤HP≤500 located at a major source of HAP, and existing non-emergency 4SRB stationary RICE >500 HP located at a major source of HAP | a. Limit the concentration of formaldehyde in the stationary RICE exhaust and using oxidation catalyst or NSCR | i. The average formaldehyde concentration, corrected to 15 percent $O_2$, dry basis, from the three test runs is less than or equal to the formaldehyde emission limitation; and<br>ii. You have installed a CPMS to continuously monitor catalyst inlet temperature according to the requirements in § 63.6625(b); and |
| | | iii. You have recorded the catalyst pressure drop and catalyst inlet temperature during the initial performance test. |
| 10. New or reconstructed non-emergency stationary RICE >500 HP located at a major source of HAP, new or reconstructed non-emergency 4SLB stationary RICE 250≤HP≤500 located at a major source of HAP, and existing non-emergency 4SRB stationary RICE >500 HP located at a major source of HAP | a. Limit the concentration of formaldehyde in the stationary RICE exhaust and not using oxidation catalyst or NSCR | i. The average formaldehyde concentration, corrected to 15 percent $O_2$, dry basis, from the three test runs is less than or equal to the formaldehyde emission limitation; and<br>ii. You have installed a CPMS to continuously monitor operating parameters approved by the Administrator (if any) according to the requirements in § 63.6625(b); and |
| | | iii. You have recorded the approved operating parameters (if any) during the initial performance test. |
| 11. Existing non-emergency stationary RICE 100≤HP≤500 located at a major source of HAP, and existing non-emergency stationary CI RICE 300<HP≤500 located at an area source of HAP | a. Reduce CO emissions | i. The average reduction of emissions of CO or formaldehyde, as applicable determined from the initial performance test is equal to or greater than the required CO or formaldehyde, as applicable, percent reduction. |
| 12. Existing non-emergency stationary RICE 100≤HP≤500 located at a major source of HAP, and existing non-emergency stationary CI RICE 300<HP≤500 located at an area source of HAP | a. Limit the concentration of formaldehyde or CO in the stationary RICE exhaust | i. The average formaldehyde or CO concentration, as applicable, corrected to 15 percent $O_2$, dry basis, from the three test runs is less than or equal to the formaldehyde or CO emission limitation, as applicable. |
| 13. Existing non-emergency 4SLB stationary RICE >500 HP located at an area source of HAP that are not remote stationary RICE and that are operated more than 24 hours per calendar year | a. Install an oxidation catalyst | i. You have conducted an initial compliance demonstration as specified in § 63.6630(e) to show that the average reduction of emissions of CO is 93 percent or more, or the average CO concentration is less than or equal to 47 ppmvd at 15 percent $O_2$; |
| | | ii. You have installed a CPMS to continuously monitor catalyst inlet temperature according to the requirements in § 63.6625(b), or you have installed equipment to automatically shut down the engine if the catalyst inlet temperature exceeds 1350 °F. |

| For each . . . | Complying with the requirement to . . . | You have demonstrated initial compliance if . . . |
|---|---|---|
| 14. Existing non-emergency 4SRB stationary RICE >500 HP located at an area source of HAP that are not remote stationary RICE and that are operated more than 24 hours per calendar year | a. Install NSCR | i. You have conducted an initial compliance demonstration as specified in § 63.6630(e) to show that the average reduction of emissions of CO is 75 percent or more, the average CO concentration is less than or equal to 270 ppmvd at 15 percent $O_2$, or the average reduction of emissions of THC is 30 percent or more; |
| | | ii. You have installed a CPMS to continuously monitor catalyst inlet temperature according to the requirements in § 63.6625(b), or you have installed equipment to automatically shut down the engine if the catalyst inlet temperature exceeds 1250 °F. |

[78 FR 6712, Jan. 30, 2013]

**Table 6 to Subpart ZZZZ of Part 63—Continuous Compliance With Emission Limitations, and Other Requirements**

As stated in § 63.6640, you must continuously comply with the emissions and operating limitations and work or management practices as required by the following:

| For each . . . | Complying with the requirement to . . . | You must demonstrate continuous compliance by . . . |
|---|---|---|
| 1. New or reconstructed non-emergency 2SLB stationary RICE >500 HP located at a major source of HAP, new or reconstructed non-emergency 4SLB stationary RICE ≥250 HP located at a major source of HAP, and new or reconstructed non-emergency CI stationary RICE >500 HP located at a major source of HAP | a. Reduce CO emissions and using an oxidation catalyst, and using a CPMS | i. Conducting semiannual performance tests for CO to demonstrate that the required CO percent reduction is achieved [a]; and<br>ii. Collecting the catalyst inlet temperature data according to § 63.6625(b); and<br>iii. Reducing these data to 4-hour rolling averages; and |
| | | iv. Maintaining the 4-hour rolling averages within the operating limitations for the catalyst inlet temperature; and |
| | | v. Measuring the pressure drop across the catalyst once per month and demonstrating that the pressure drop across the catalyst is within the operating limitation established during the performance test. |
| 2. New or reconstructed non-emergency 2SLB stationary RICE >500 HP located at a major source of HAP, new or reconstructed non-emergency 4SLB stationary RICE ≥250 HP located at a major source of HAP, and new or reconstructed non-emergency CI stationary RICE >500 HP located at a major source of HAP | a. Reduce CO emissions and not using an oxidation catalyst, and using a CPMS | i. Conducting semiannual performance tests for CO to demonstrate that the required CO percent reduction is achieved [a]; and<br>ii. Collecting the approved operating parameter (if any) data according to § 63.6625(b); and<br>iii. Reducing these data to 4-hour rolling averages; and |

| For each . . . | Complying with the requirement to . . . | You must demonstrate continuous compliance by . . . |
|---|---|---|
| | | iv. Maintaining the 4-hour rolling averages within the operating limitations for the operating parameters established during the performance test. |
| 3. New or reconstructed non-emergency 2SLB stationary RICE >500 HP located at a major source of HAP, new or reconstructed non-emergency 4SLB stationary RICE ≥250 HP located at a major source of HAP, new or reconstructed non-emergency stationary CI RICE >500 HP located at a major source of HAP, and existing non-emergency stationary CI RICE >500 HP | a. Reduce CO emissions or limit the concentration of CO in the stationary RICE exhaust, and using a CEMS | i. Collecting the monitoring data according to § 63.6625(a), reducing the measurements to 1-hour averages, calculating the percent reduction or concentration of CO emissions according to § 63.6620; and<br>ii. Demonstrating that the catalyst achieves the required percent reduction of CO emissions over the 4-hour averaging period, or that the emission remain at or below the CO concentration limit; and |
| | | iii. Conducting an annual RATA of your CEMS using PS 3 and 4A of 40 CFR part 60, appendix B, as well as daily and periodic data quality checks in accordance with 40 CFR part 60, appendix F, procedure 1. |
| 4. Non-emergency 4SRB stationary RICE >500 HP located at a major source of HAP | a. Reduce formaldehyde emissions and using NSCR | i. Collecting the catalyst inlet temperature data according to § 63.6625(b); and |
| | | ii. Reducing these data to 4-hour rolling averages; and |
| | | iii. Maintaining the 4-hour rolling averages within the operating limitations for the catalyst inlet temperature; and |
| | | iv. Measuring the pressure drop across the catalyst once per month and demonstrating that the pressure drop across the catalyst is within the operating limitation established during the performance test. |
| 5. Non-emergency 4SRB stationary RICE >500 HP located at a major source of HAP | a. Reduce formaldehyde emissions and not using NSCR | i. Collecting the approved operating parameter (if any) data according to § 63.6625(b); and |
| | | ii. Reducing these data to 4-hour rolling averages; and |
| | | iii. Maintaining the 4-hour rolling averages within the operating limitations for the operating parameters established during the performance test. |
| 6. Non-emergency 4SRB stationary RICE with a brake HP ≥5,000 located at a major source of HAP | a. Reduce formaldehyde emissions | Conducting semiannual performance tests for formaldehyde to demonstrate that the required formaldehyde percent reduction is achieved, or to demonstrate that the average reduction of emissions of THC determined from the performance test is equal to or greater than 30 percent.[a] |

| For each . . . | Complying with the requirement to . . . | You must demonstrate continuous compliance by . . . |
|---|---|---|
| 7. New or reconstructed non-emergency stationary RICE >500 HP located at a major source of HAP and new or reconstructed non-emergency 4SLB stationary RICE 250≤HP≤500 located at a major source of HAP | a. Limit the concentration of formaldehyde in the stationary RICE exhaust and using oxidation catalyst or NSCR | i. Conducting semiannual performance tests for formaldehyde to demonstrate that your emissions remain at or below the formaldehyde concentration limit [a]; and<br>ii. Collecting the catalyst inlet temperature data according to § 63.6625(b); and |
| | | iii. Reducing these data to 4-hour rolling averages; and |
| | | iv. Maintaining the 4-hour rolling averages within the operating limitations for the catalyst inlet temperature; and |
| | | v. Measuring the pressure drop across the catalyst once per month and demonstrating that the pressure drop across the catalyst is within the operating limitation established during the performance test. |
| 8. New or reconstructed non-emergency stationary RICE >500 HP located at a major source of HAP and new or reconstructed non-emergency 4SLB stationary RICE 250≤HP≤500 located at a major source of HAP | a. Limit the concentration of formaldehyde in the stationary RICE exhaust and not using oxidation catalyst or NSCR | i. Conducting semiannual performance tests for formaldehyde to demonstrate that your emissions remain at or below the formaldehyde concentration limit [a]; and<br>ii. Collecting the approved operating parameter (if any) data according to § 63.6625(b); and |
| | | iii. Reducing these data to 4-hour rolling averages; and |
| | | iv. Maintaining the 4-hour rolling averages within the operating limitations for the operating parameters established during the performance test. |
| 9. Existing emergency and black start stationary RICE ≤500 HP located at a major source of HAP, existing non-emergency stationary RICE <100 HP located at a major source of HAP, existing emergency and black start stationary RICE located at an area source of HAP, existing non-emergency stationary CI RICE ≤300 HP located at an area source of HAP, existing non-emergency 2SLB stationary RICE located at an area source of HAP, existing non-emergency stationary SI RICE located at an area source of HAP which combusts landfill or digester gas equivalent to 10 percent or more of the gross heat input on an annual basis, existing non-emergency 4SLB and 4SRB stationary RICE ≤500 HP located at an area source of HAP, existing non-emergency 4SLB and 4SRB stationary RICE >500 HP located at an area source of HAP that operate 24 hours or less per calendar year, and existing non-emergency 4SLB and 4SRB stationary RICE >500 HP located at an area source of HAP that are remote stationary RICE | a. Work or Management practices | i. Operating and maintaining the stationary RICE according to the manufacturer's emission-related operation and maintenance instructions; or<br>ii. Develop and follow your own maintenance plan which must provide to the extent practicable for the maintenance and operation of the engine in a manner consistent with good air pollution control practice for minimizing emissions. |

| For each . . . | Complying with the requirement to . . . | You must demonstrate continuous compliance by . . . |
|---|---|---|
| 10. Existing stationary CI RICE >500 HP that are not limited use stationary RICE | a. Reduce CO emissions, or limit the concentration of CO in the stationary RICE exhaust, and using oxidation catalyst | i. Conducting performance tests every 8,760 hours or 3 years, whichever comes first, for CO or formaldehyde, as appropriate, to demonstrate that the required CO or formaldehyde, as appropriate, percent reduction is achieved or that your emissions remain at or below the CO or formaldehyde concentration limit; and |
| | | ii. Collecting the catalyst inlet temperature data according to § 63.6625(b); and |
| | | iii. Reducing these data to 4-hour rolling averages; and |
| | | iv. Maintaining the 4-hour rolling averages within the operating limitations for the catalyst inlet temperature; and |
| | | v. Measuring the pressure drop across the catalyst once per month and demonstrating that the pressure drop across the catalyst is within the operating limitation established during the performance test. |
| 11. Existing stationary CI RICE >500 HP that are not limited use stationary RICE | a. Reduce CO emissions, or limit the concentration of CO in the stationary RICE exhaust, and not using oxidation catalyst | i. Conducting performance tests every 8,760 hours or 3 years, whichever comes first, for CO or formaldehyde, as appropriate, to demonstrate that the required CO or formaldehyde, as appropriate, percent reduction is achieved or that your emissions remain at or below the CO or formaldehyde concentration limit; and |
| | | ii. Collecting the approved operating parameter (if any) data according to § 63.6625(b); and |
| | | iii. Reducing these data to 4-hour rolling averages; and |
| | | iv. Maintaining the 4-hour rolling averages within the operating limitations for the operating parameters established during the performance test. |
| 12. Existing limited use CI stationary RICE >500 HP | a. Reduce CO emissions or limit the concentration of CO in the stationary RICE exhaust, and using an oxidation catalyst | i. Conducting performance tests every 8,760 hours or 5 years, whichever comes first, for CO or formaldehyde, as appropriate, to demonstrate that the required CO or formaldehyde, as appropriate, percent reduction is achieved or that your emissions remain at or below the CO or formaldehyde concentration limit; and |
| | | ii. Collecting the catalyst inlet temperature data according to § 63.6625(b); and |
| | | iii. Reducing these data to 4-hour rolling averages; and |

| For each . . . | Complying with the requirement to . . . | You must demonstrate continuous compliance by . . . |
|---|---|---|
| | | iv. Maintaining the 4-hour rolling averages within the operating limitations for the catalyst inlet temperature; and |
| | | v. Measuring the pressure drop across the catalyst once per month and demonstrating that the pressure drop across the catalyst is within the operating limitation established during the performance test. |
| 13. Existing limited use CI stationary RICE >500 HP | a. Reduce CO emissions or limit the concentration of CO in the stationary RICE exhaust, and not using an oxidation catalyst | i. Conducting performance tests every 8,760 hours or 5 years, whichever comes first, for CO or formaldehyde, as appropriate, to demonstrate that the required CO or formaldehyde, as appropriate, percent reduction is achieved or that your emissions remain at or below the CO or formaldehyde concentration limit; and |
| | | ii. Collecting the approved operating parameter (if any) data according to § 63.6625(b); and |
| | | iii. Reducing these data to 4-hour rolling averages; and |
| | | iv. Maintaining the 4-hour rolling averages within the operating limitations for the operating parameters established during the performance test. |
| 14. Existing non-emergency 4SLB stationary RICE >500 HP located at an area source of HAP that are not remote stationary RICE and that are operated more than 24 hours per calendar year | a. Install an oxidation catalyst | i. Conducting annual compliance demonstrations as specified in § 63.6640(c) to show that the average reduction of emissions of CO is 93 percent or more, or the average CO concentration is less than or equal to 47 ppmvd at 15 percent $O_2$; and either<br>ii. Collecting the catalyst inlet temperature data according to § 63.6625(b), reducing these data to 4-hour rolling averages; and maintaining the 4-hour rolling averages within the limitation of greater than 450 °F and less than or equal to 1350 °F for the catalyst inlet temperature; or<br>iii. Immediately shutting down the engine if the catalyst inlet temperature exceeds 1350 °F. |

| For each . . . | Complying with the requirement to . . . | You must demonstrate continuous compliance by . . . |
|---|---|---|
| 15. Existing non-emergency 4SRB stationary RICE >500 HP located at an area source of HAP that are not remote stationary RICE and that are operated more than 24 hours per calendar year | a. Install NSCR | i. Conducting annual compliance demonstrations as specified in § 63.6640(c) to show that the average reduction of emissions of CO is 75 percent or more, the average CO concentration is less than or equal to 270 ppmvd at 15 percent $O_2$, or the average reduction of emissions of THC is 30 percent or more; and either<br>ii. Collecting the catalyst inlet temperature data according to § 63.6625(b), reducing these data to 4-hour rolling averages; and maintaining the 4-hour rolling averages within the limitation of greater than or equal to 750 °F and less than or equal to 1250 °F for the catalyst inlet temperature; or<br>iii. Immediately shutting down the engine if the catalyst inlet temperature exceeds 1250 °F. |

[a] After you have demonstrated compliance for two consecutive tests, you may reduce the frequency of subsequent performance tests to annually. If the results of any subsequent annual performance test indicate the stationary RICE is not in compliance with the CO or formaldehyde emission limitation, or you deviate from any of your operating limitations, you must resume semiannual performance tests.

[78 FR 6715, Jan. 30, 2013]

**Table 7 to Subpart ZZZZ of Part 63—Requirements for Reports**

As stated in § 63.6650, you must comply with the following requirements for reports:

| For each . . . | You must submit a . . . | The report must contain . . . | You must submit the report . . . |
|---|---|---|---|
| 1. Existing non-emergency, non-black start stationary RICE 100≤HP≤500 located at a major source of HAP; existing non-emergency, non-black start stationary CI RICE >500 HP located at a major source of HAP; existing non-emergency 4SRB stationary RICE >500 HP located at a major source of HAP; existing non-emergency, non-black start stationary CI RICE >300 HP located at an area source of HAP; new or reconstructed non-emergency stationary RICE >500 HP located at a major source of HAP; and new or reconstructed non-emergency 4SLB stationary RICE 250≤HP≤500 located at a major source of HAP | Compliance report | a. If there are no deviations from any emission limitations or operating limitations that apply to you, a statement that there were no deviations from the emission limitations or operating limitations during the reporting period. If there were no periods during which the CMS, including CEMS and CPMS, was out-of-control, as specified in § 63.8(c)(7), a statement that there were not periods during which the CMS was out-of-control during the reporting period; or | i. Semiannually according to the requirements in § 63.6650(b)(1)-(5) for engines that are not limited use stationary RICE subject to numerical emission limitations; and<br>ii. Annually according to the requirements in § 63.6650(b)(6)-(9) for engines that are limited use stationary RICE subject to numerical emission limitations. |

| For each . . . | You must submit a . . . | The report must contain . . . | You must submit the report . . . |
|---|---|---|---|
| | | b. If you had a deviation from any emission limitation or operating limitation during the reporting period, the information in § 63.6650(d). If there were periods during which the CMS, including CEMS and CPMS, was out-of-control, as specified in § 63.8(c)(7), the information in § 63.6650(e); or | i. Semiannually according to the requirements in § 63.6650(b). |
| | | c. If you had a malfunction during the reporting period, the information in § 63.6650(c)(4). | i. Semiannually according to the requirements in § 63.6650(b). |
| 2. New or reconstructed non-emergency stationary RICE that combusts landfill gas or digester gas equivalent to 10 percent or more of the gross heat input on an annual basis | Report | a. The fuel flow rate of each fuel and the heating values that were used in your calculations, and you must demonstrate that the percentage of heat input provided by landfill gas or digester gas, is equivalent to 10 percent or more of the gross heat input on an annual basis; and | i. Annually, according to the requirements in § 63.6650. |
| | | b. The operating limits provided in your federally enforceable permit, and any deviations from these limits; and | i. See item 2.a.i. |
| | | c. Any problems or errors suspected with the meters. | i. See item 2.a.i. |
| 3. Existing non-emergency, non-black start 4SLB and 4SRB stationary RICE >500 HP located at an area source of HAP that are not remote stationary RICE and that operate more than 24 hours per calendar year | Compliance report | a. The results of the annual compliance demonstration, if conducted during the reporting period. | i. Semiannually according to the requirements in § 63.6650(b)(1)-(5). |
| 4. Emergency stationary RICE that operate or are contractually obligated to be available for more than 15 hours per year for the purposes specified in § 63.6640(f)(2)(ii) and (iii) or that operate for the purposes specified in § 63.6640(f)(4)( ii) | Report | a. The information in § 63.6650(h)(1) | i. annually according to the requirements in § 63.6650(h)(2)-(3). |

[78 FR 6719, Jan. 30, 2013]

**Table 8 to Subpart ZZZZ of Part 63—Applicability of General Provisions to Subpart ZZZZ.**

As stated in § 63.6665, you must comply with the following applicable general provisions.

| General provisions citation | Subject of citation | Applies to subpart | Explanation |
|---|---|---|---|
| § 63.1 | General applicability of the General Provisions | Yes. | |
| § 63.2 | Definitions | Yes | Additional terms defined in § 63.6675. |

| General provisions citation | Subject of citation | Applies to subpart | Explanation |
|---|---|---|---|
| § 63.3 | Units and abbreviations | Yes. | |
| § 63.4 | Prohibited activities and circumvention | Yes. | |
| § 63.5 | Construction and reconstruction | Yes. | |
| § 63.6(a) | Applicability | Yes. | |
| § 63.6(b)(1)-(4) | Compliance dates for new and reconstructed sources | Yes. | |
| § 63.6(b)(5) | Notification | Yes. | |
| § 63.6(b)(6) | [Reserved] | | |
| § 63.6(b)(7) | Compliance dates for new and reconstructed area sources that become major sources | Yes. | |
| § 63.6(c)(1)-(2) | Compliance dates for existing sources | Yes. | |
| § 63.6(c)(3)-(4) | [Reserved] | | |
| § 63.6(c)(5) | Compliance dates for existing area sources that become major sources | Yes. | |
| § 63.6(d) | [Reserved] | | |
| § 63.6(e) | Operation and maintenance | No. | |
| § 63.6(f)(1) | Applicability of standards | No. | |
| § 63.6(f)(2) | Methods for determining compliance | Yes. | |
| § 63.6(f)(3) | Finding of compliance | Yes. | |
| § 63.6(g)(1)-(3) | Use of alternate standard | Yes. | |
| § 63.6(h) | Opacity and visible emission standards | No | Subpart ZZZZ does not contain opacity or visible emission standards. |
| § 63.6(i) | Compliance extension procedures and criteria | Yes. | |
| § 63.6(j) | Presidential compliance exemption | Yes. | |
| § 63.7(a)(1)-(2) | Performance test dates | Yes | Subpart ZZZZ contains performance test dates at §§ 63.6610, 63.6611, and 63.6612. |
| § 63.7(a)(3) | CAA section 114 authority | Yes. | |
| § 63.7(b)(1) | Notification of performance test | Yes | Except that § 63.7(b)(1) only applies as specified in § 63.6645. |
| § 63.7(b)(2) | Notification of rescheduling | Yes | Except that § 63.7(b)(2) only applies as specified in § 63.6645. |
| § 63.7(c) | Quality assurance/test plan | Yes | Except that § 63.7(c) only applies as specified in § 63.6645. |
| § 63.7(d) | Testing facilities | Yes. | |
| § 63.7(e)(1) | Conditions for conducting performance tests | No. | Subpart ZZZZ specifies conditions for conducting performance tests at § 63.6620. |
| § 63.7(e)(2) | Conduct of performance tests and reduction of data | Yes | Subpart ZZZZ specifies test methods at § 63.6620. |
| § 63.7(e)(3) | Test run duration | Yes. | |

| General provisions citation | Subject of citation | Applies to subpart | Explanation |
|---|---|---|---|
| § 63.7(e)(4) | Administrator may require other testing under section 114 of the CAA | Yes. | |
| § 63.7(f) | Alternative test method provisions | Yes. | |
| § 63.7(g) | Performance test data analysis, recordkeeping, and reporting | Yes. | |
| § 63.7(h) | Waiver of tests | Yes. | |
| § 63.8(a)(1) | Applicability of monitoring requirements | Yes | Subpart ZZZZ contains specific requirements for monitoring at § 63.6625. |
| § 63.8(a)(2) | Performance specifications | Yes. | |
| § 63.8(a)(3) | [Reserved] | | |
| § 63.8(a)(4) | Monitoring for control devices | No. | |
| § 63.8(b)(1) | Monitoring | Yes. | |
| § 63.8(b)(2)-(3) | Multiple effluents and multiple monitoring systems | Yes. | |
| § 63.8(c)(1) | Monitoring system operation and maintenance | Yes. | |
| § 63.8(c)(1)(i) | Routine and predictable SSM | No | |
| § 63.8(c)(1)(ii) | SSM not in Startup Shutdown Malfunction Plan | Yes. | |
| § 63.8(c)(1)(iii) | Compliance with operation and maintenance requirements | No | |
| § 63.8(c)(2)-(3) | Monitoring system installation | Yes. | |
| § 63.8(c)(4) | Continuous monitoring system (CMS) requirements | Yes | Except that subpart ZZZZ does not require Continuous Opacity Monitoring System (COMS). |
| § 63.8(c)(5) | COMS minimum procedures | No | Subpart ZZZZ does not require COMS. |
| § 63.8(c)(6)-(8) | CMS requirements | Yes | Except that subpart ZZZZ does not require COMS. |
| § 63.8(d) | CMS quality control | Yes. | |
| § 63.8(e) | CMS performance evaluation | Yes | Except for § 63.8(e)(5)(ii), which applies to COMS. |
| | | Except that § 63.8(e) only applies as specified in § 63.6645. | |
| § 63.8(f)(1)-(5) | Alternative monitoring method | Yes | Except that § 63.8(f)(4) only applies as specified in § 63.6645. |
| § 63.8(f)(6) | Alternative to relative accuracy test | Yes | Except that § 63.8(f)(6) only applies as specified in § 63.6645. |
| § 63.8(g) | Data reduction | Yes | Except that provisions for COMS are not applicable. Averaging periods for demonstrating compliance are specified at §§ 63.6635 and 63.6640. |
| § 63.9(a) | Applicability and State delegation of notification requirements | Yes. | |
| § 63.9(b)(1)-(5) | Initial notifications | Yes | Except that § 63.9(b)(3) is reserved. |

| General provisions citation | Subject of citation | Applies to subpart | Explanation |
|---|---|---|---|
| | | Except that § 63.9(b) only applies as specified in § 63.6645. | |
| § 63.9(c) | Request for compliance extension | Yes | Except that § 63.9(c) only applies as specified in § 63.6645. |
| § 63.9(d) | Notification of special compliance requirements for new sources | Yes | Except that § 63.9(d) only applies as specified in § 63.6645. |
| § 63.9(e) | Notification of performance test | Yes | Except that § 63.9(e) only applies as specified in § 63.6645. |
| § 63.9(f) | Notification of visible emission (VE)/opacity test | No | Subpart ZZZZ does not contain opacity or VE standards. |
| § 63.9(g)(1) | Notification of performance evaluation | Yes | Except that § 63.9(g) only applies as specified in § 63.6645. |
| § 63.9(g)(2) | Notification of use of COMS data | No | Subpart ZZZZ does not contain opacity or VE standards. |
| § 63.9(g)(3) | Notification that criterion for alternative to RATA is exceeded | Yes | If alternative is in use. |
| | | Except that § 63.9(g) only applies as specified in § 63.6645. | |
| § 63.9(h)(1)-(6) | Notification of compliance status | Yes | Except that notifications for sources using a CEMS are due 30 days after completion of performance evaluations. § 63.9(h)(4) is reserved. |
| | | | Except that § 63.9(h) only applies as specified in § 63.6645. |
| § 63.9(i) | Adjustment of submittal deadlines | Yes. | |
| § 63.9(j) | Change in previous information | Yes. | |
| § 63.10(a) | Administrative provisions for recordkeeping/reporting | Yes. | |
| § 63.10(b)(1) | Record retention | Yes | Except that the most recent 2 years of data do not have to be retained on site. |
| § 63.10(b)(2)(i)-(v) | Records related to SSM | No. | |
| § 63.10(b)(2)(vi)-(xi) | Records | Yes. | |
| § 63.10(b)(2)(xii) | Record when under waiver | Yes. | |
| § 63.10(b)(2)(xiii) | Records when using alternative to RATA | Yes | For CO standard if using RATA alternative. |
| § 63.10(b)(2)(xiv) | Records of supporting documentation | Yes. | |
| § 63.10(b)(3) | Records of applicability determination | Yes. | |
| § 63.10(c) | Additional records for sources using CEMS | Yes | Except that § 63.10(c)(2)-(4) and (9) are reserved. |
| § 63.10(d)(1) | General reporting requirements | Yes. | |
| § 63.10(d)(2) | Report of performance test results | Yes. | |

| General provisions citation | Subject of citation | Applies to subpart | Explanation |
|---|---|---|---|
| § 63.10(d)(3) | Reporting opacity or VE observations | No | Subpart ZZZZ does not contain opacity or VE standards. |
| § 63.10(d)(4) | Progress reports | Yes. | |
| § 63.10(d)(5) | Startup, shutdown, and malfunction reports | No. | |
| § 63.10(e)(1) and (2)(i) | Additional CMS Reports | Yes. | |
| § 63.10(e)(2)(ii) | COMS-related report | No | Subpart ZZZZ does not require COMS. |
| § 63.10(e)(3) | Excess emission and parameter exceedances reports | Yes. | Except that § 63.10(e)(3)(i) (C) is reserved. |
| § 63.10(e)(4) | Reporting COMS data | No | Subpart ZZZZ does not require COMS. |
| § 63.10(f) | Waiver for recordkeeping/reporting | Yes. | |
| § 63.11 | Flares | No. | |
| § 63.12 | State authority and delegations | Yes. | |
| § 63.13 | Addresses | Yes. | |
| § 63.14 | Incorporation by reference | Yes. | |
| § 63.15 | Availability of information | Yes. | |

[75 FR 9688, Mar. 3, 2010, as amended at 78 FR 6720, Jan. 30, 2013]

**Appendix A—Protocol for Using an Electrochemical Analyzer to Determine Oxygen and Carbon Monoxide Concentrations From Certain Engines**

1.0 Scope and Application. What is this Protocol?

This protocol is a procedure for using portable electrochemical (EC) cells for measuring carbon monoxide (CO) and oxygen ($O_2$ ) concentrations in controlled and uncontrolled emissions from existing stationary 4-stroke lean burn and 4-stroke rich burn reciprocating internal combustion engines as specified in the applicable rule.

*1.1 Analytes. What does this protocol determine?*

This protocol measures the engine exhaust gas concentrations of carbon monoxide (CO) and oxygen ($O_2$ ).

| Analyte | CAS No. | Sensitivity |
|---|---|---|
| Carbon monoxide (CO) | 630-08-0 | Minimum detectable limit should be 2 percent of the nominal range or 1 ppm, whichever is less restrictive. |
| Oxygen ($O_2$) | *7782-44-7* | |

*1.2 Applicability. When is this protocol acceptable?*

This protocol is applicable to 40 CFR part 63, subpart ZZZZ. Because of inherent cross sensitivities of EC cells, you must not apply this protocol to other emissions sources without specific instruction to that effect.

*1.3 Data Quality Objectives. How good must my collected data be?*

Refer to Section 13 to verify and document acceptable analyzer performance.

*1.4 Range. What is the targeted analytical range for this protocol?*

The measurement system and EC cell design(s) conforming to this protocol will determine the analytical range for each gas component. The nominal ranges are defined by choosing up-scale calibration gas concentrations near the maximum anticipated flue gas concentrations for CO and $O_2$ , or no more than twice the permitted CO level.

*1.5 Sensitivity. What minimum detectable limit will this protocol yield for a particular gas component?*

The minimum detectable limit depends on the nominal range and resolution of the specific EC cell used, and the signal to noise ratio of the measurement system. The minimum detectable limit should be 2 percent of the nominal range or 1 ppm, whichever is less restrictive.

## 2.0 Summary of Protocol

In this protocol, a gas sample is extracted from an engine exhaust system and then conveyed to a portable EC analyzer for measurement of CO and $O_2$ gas concentrations. This method provides measurement system performance specifications and sampling protocols to ensure reliable data. You may use additions to, or modifications of vendor supplied measurement systems (e.g., heated or unheated sample lines, thermocouples, flow meters, selective gas scrubbers, etc.) to meet the design specifications of this protocol. Do not make changes to the measurement system from the as-verified configuration (Section 3.12).

## 3.0 Definitions

*3.1 Measurement System.* The total equipment required for the measurement of CO and $O_2$ concentrations. The measurement system consists of the following major subsystems:

*3.1.1 Data Recorder.* A strip chart recorder, computer or digital recorder for logging measurement data from the analyzer output. You may record measurement data from the digital data display manually or electronically.

*3.1.2 Electrochemical (EC) Cell.* A device, similar to a fuel cell, used to sense the presence of a specific analyte and generate an electrical current output proportional to the analyte concentration.

*3.1.3 Interference Gas Scrubber.* A device used to remove or neutralize chemical compounds that may interfere with the selective operation of an EC cell.

*3.1.4 Moisture Removal System.* Any device used to reduce the concentration of moisture in the sample stream so as to protect the EC cells from the damaging effects of condensation and to minimize errors in measurements caused by the scrubbing of soluble gases.

*3.1.5 Sample Interface.* The portion of the system used for one or more of the following: sample acquisition; sample transport; sample conditioning or protection of the EC cell from any degrading effects of the engine exhaust effluent; removal of particulate matter and condensed moisture.

*3.2 Nominal Range.* The range of analyte concentrations over which each EC cell is operated (normally 25 percent to 150 percent of up-scale calibration gas value). Several nominal ranges can be used for any given cell so long as the calibration and repeatability checks for that range remain within specifications.

*3.3 Calibration Gas.* A vendor certified concentration of a specific analyte in an appropriate balance gas.

*3.4 Zero Calibration Error.* The analyte concentration output exhibited by the EC cell in response to zero-level calibration gas.

*3.5 Up-Scale Calibration Error.* The mean of the difference between the analyte concentration exhibited by the EC cell and the certified concentration of the up-scale calibration gas.

*3.6 Interference Check.* A procedure for quantifying analytical interference from components in the engine exhaust gas other than the targeted analytes.

*3.7 Repeatability Check.* A protocol for demonstrating that an EC cell operated over a given nominal analyte concentration range provides a stable and consistent response and is not significantly affected by repeated exposure to that gas.

*3.8 Sample Flow Rate.* The flow rate of the gas sample as it passes through the EC cell. In some situations, EC cells can experience drift with changes in flow rate. The flow rate must be monitored and documented during all phases of a sampling run.

*3.9 Sampling Run.* A timed three-phase event whereby an EC cell's response rises and plateaus in a sample conditioning phase, remains relatively constant during a measurement data phase, then declines during a refresh phase. The sample conditioning phase exposes the EC cell to the gas sample for a length of time sufficient to reach a constant response. The measurement data phase is the time interval during which gas sample measurements can be made that meet the acceptance criteria of this protocol. The refresh phase then purges the EC cells with CO-free air. The refresh phase replenishes requisite $O_2$ and moisture in the electrolyte reserve and provides a mechanism to de-gas or desorb any interference gas scrubbers or filters so as to enable a stable CO EC cell response. There are four primary types of sampling runs: pre- sampling calibrations; stack gas sampling; post-sampling calibration checks; and measurement system repeatability checks. Stack gas sampling runs can be chained together for extended evaluations, providing all other procedural specifications are met.

*3.10 Sampling Day.* A time not to exceed twelve hours from the time of the pre-sampling calibration to the post-sampling calibration check. During this time, stack gas sampling runs can be repeated without repeated recalibrations, providing all other sampling specifications have been met.

*3.11 Pre-Sampling Calibration/Post-Sampling Calibration Check.* The protocols executed at the beginning and end of each sampling day to bracket measurement readings with controlled performance checks.

*3.12 Performance-Established Configuration.* The EC cell and sampling system configuration that existed at the time that it initially met the performance requirements of this protocol.

## 4.0 Interferences.

When present in sufficient concentrations, NO and $NO_2$ are two gas species that have been reported to interfere with CO concentration measurements. In the likelihood of this occurrence, it is the protocol user's responsibility to employ and properly maintain an appropriate CO EC cell filter or scrubber for removal of these gases, as described in Section 6.2.12.

## 5.0 Safety. [Reserved]

## 6.0 Equipment and Supplies.

### *6.1 What equipment do I need for the measurement system?*

The system must maintain the gas sample at conditions that will prevent moisture condensation in the sample transport lines, both before and as the sample gas contacts the EC cells. The essential components of the measurement system are described below.

### 6.2 Measurement System Components.

*6.2.1 Sample Probe.* A single extraction-point probe constructed of glass, stainless steel or other non-reactive material, and of length sufficient to reach any designated sampling point. The sample probe must be designed to prevent plugging due to condensation or particulate matter.

*6.2.2 Sample Line.* Non-reactive tubing to transport the effluent from the sample probe to the EC cell.

*6.2.3 Calibration Assembly (optional).* A three-way valve assembly or equivalent to introduce calibration gases at ambient pressure at the exit end of the sample probe during calibration checks. The assembly must be designed such that only stack gas or calibration gas flows in the sample line and all gases flow through any gas path filters.

*6.2.4 Particulate Filter (optional).* Filters before the inlet of the EC cell to prevent accumulation of particulate material in the measurement system and extend the useful life of the components. All filters must be fabricated of materials that are non-reactive to the gas mixtures being sampled.

*6.2.5 Sample Pump.* A leak-free pump to provide undiluted sample gas to the system at a flow rate sufficient to minimize the response time of the measurement system. If located upstream of the EC cells, the pump must be constructed of a material that is non-reactive to the gas mixtures being sampled.

*6.2.8 Sample Flow Rate Monitoring.* An adjustable rotameter or equivalent device used to adjust and maintain the sample flow rate through the analyzer as prescribed.

*6.2.9 Sample Gas Manifold (optional).* A manifold to divert a portion of the sample gas stream to the analyzer and the remainder to a by-pass discharge vent. The sample gas manifold may also include provisions for introducing calibration gases directly to the analyzer. The manifold must be constructed of a material that is non-reactive to the gas mixtures being sampled.

*6.2.10 EC cell.* A device containing one or more EC cells to determine the CO and $O_2$ concentrations in the sample gas stream. The EC cell(s) must meet the applicable performance specifications of Section 13 of this protocol.

*6.2.11 Data Recorder.* A strip chart recorder, computer or digital recorder to make a record of analyzer output data. The data recorder resolution (i.e., readability) must be no greater than 1 ppm for CO; 0.1 percent for $O_2$ ; and one degree (either °C or °F) for temperature. Alternatively, you may use a digital or analog meter having the same resolution to observe and manually record the analyzer responses.

*6.2.12 Interference Gas Filter or Scrubber.* A device to remove interfering compounds upstream of the CO EC cell. Specific interference gas filters or scrubbers used in the performance-established configuration of the analyzer must continue to be used. Such a filter or scrubber must have a means to determine when the removal agent is exhausted. Periodically replace or replenish it in accordance with the manufacturer's recommendations.

7.0 Reagents and Standards. What calibration gases are needed?

*7.1 Calibration Gases.* CO calibration gases for the EC cell must be CO in nitrogen or CO in a mixture of nitrogen and $O_2$. Use CO calibration gases with labeled concentration values certified by the manufacturer to be within ± 5 percent of the label value. Dry ambient air (20.9 percent $O_2$ ) is acceptable for calibration of the $O_2$ cell. If needed, any lower percentage $O_2$ calibration gas must be a mixture of $O_2$ in nitrogen.

*7.1.1 Up-Scale CO Calibration Gas Concentration.* Choose one or more up-scale gas concentrations such that the average of the stack gas measurements for each stack gas sampling run are between 25 and 150 percent of those concentrations. Alternatively, choose an up-scale gas that does not exceed twice the concentration of the applicable outlet standard. If a measured gas value exceeds 150 percent of the up-scale CO calibration gas value at any time during the stack gas sampling run, the run must be discarded and repeated.

*7.1.2 Up-Scale $O_2$ Calibration Gas Concentration.*

Select an $O_2$ gas concentration such that the difference between the gas concentration and the average stack gas measurement or reading for each sample run is less than 15 percent $O_2$ . When the average exhaust gas $O_2$ readings are above 6 percent, you may use dry ambient air (20.9 percent $O_2$ ) for the up-scale $O_2$ calibration gas.

*7.1.3 Zero Gas.* Use an inert gas that contains less than 0.25 percent of the up-scale CO calibration gas concentration. You may use dry air that is free from ambient CO and other combustion gas products (e.g., $CO_2$ ).

## 8.0 Sample Collection and Analysis

8.1 Selection of Sampling Sites.

8.1.1 Control Device Inlet. Select a sampling site sufficiently downstream of the engine so that the combustion gases should be well mixed. Use a single sampling extraction point near the center of the duct (e.g., within the 10 percent centroidal area), unless instructed otherwise.

8.1.2 Exhaust Gas Outlet. Select a sampling site located at least two stack diameters downstream of any disturbance (e.g., turbocharger exhaust, crossover junction or recirculation take-off) and at least one-half stack diameter upstream of the gas discharge to the atmosphere. Use a single sampling extraction point near the center of the duct (e.g., within the 10 percent centroidal area), unless instructed otherwise.

8.2 Stack Gas Collection and Analysis. Prior to the first stack gas sampling run, conduct that the pre-sampling calibration in accordance with Section 10.1. Use Figure 1 to record all data. Zero the analyzer with zero gas. Confirm and record that the scrubber media color is correct and not exhausted. Then position the probe at the sampling point and begin the sampling run at the same flow rate used during the up-scale calibration. Record the start time. Record all EC cell output responses and the flow rate during the “sample conditioning phase” once per minute until constant readings are obtained. Then begin the “measurement data phase” and record readings every 15 seconds for at least two minutes (or eight readings), or as otherwise required to achieve two continuous minutes of data that meet the specification given in Section 13.1. Finally, perform the “refresh phase” by introducing dry air, free from CO and other combustion gases, until several minute-to-minute readings of consistent value have been obtained. For each run use the “measurement data phase” readings to calculate the average stack gas CO and $O_2$ concentrations.

8.3 EC Cell Rate. Maintain the EC cell sample flow rate so that it does not vary by more than ± 10 percent throughout the pre-sampling calibration, stack gas sampling and post-sampling calibration check. Alternatively, the EC cell sample flow rate can be maintained within a tolerance range that does not affect the gas concentration readings by more than ± 3 percent, as instructed by the EC cell manufacturer.

## 9.0 Quality Control (Reserved)

## 10.0 Calibration and Standardization

*10.1 Pre-Sampling Calibration.* Conduct the following protocol once for each nominal range to be used on each EC cell before performing a stack gas sampling run on each field sampling day. Repeat the calibration if you replace an EC cell before completing all of the sampling runs. There is no prescribed order for calibration of the EC cells; however, each cell must complete the measurement data phase during calibration. Assemble the measurement system by following the manufacturer's recommended protocols including for preparing and preconditioning the EC cell. Assure the measurement system has no leaks and verify the gas scrubbing agent is not depleted. Use Figure 1 to record all data.

*10.1.1 Zero Calibration.* For both the $O_2$ and CO cells, introduce zero gas to the measurement system (e.g., at the calibration assembly) and record the concentration reading every minute until readings are constant for at least two consecutive minutes. Include the time and sample flow rate. Repeat the steps in this section at least once to verify the zero calibration for each component gas.

*10.1.2 Zero Calibration Tolerance.* For each zero gas introduction, the zero level output must be less than or equal to ± 3 percent of the up-scale gas value or ± 1 ppm, whichever is less restrictive, for the CO channel and less than or equal to ± 0.3 percent $O_2$ for the $O_2$ channel.

*10.1.3 Up-Scale Calibration.* Individually introduce each calibration gas to the measurement system (e.g., at the calibration assembly) and record the start time. Record all EC cell output responses and the flow rate during this “sample conditioning phase” once per minute until readings are constant for at least two minutes. Then begin the “measurement data phase” and record readings every 15 seconds for a total of two minutes, or as otherwise required. Finally, perform the “refresh phase” by introducing dry air, free from CO and other combustion gases, until readings are constant for at least two consecutive minutes. Then repeat the steps in this section at least once to verify the calibration for each component gas. Introduce all gases to flow through the entire sample handling system (i.e., at the exit end of the sampling probe or the calibration assembly).

*10.1.4 Up-Scale Calibration Error.* The mean of the difference of the "measurement data phase" readings from the reported standard gas value must be less than or equal to ± 5 percent or ± 1 ppm for CO or ± 0.5 percent $O_2$ , whichever is less restrictive, respectively. The maximum allowable deviation from the mean measured value of any single "measurement data phase" reading must be less than or equal to ± 2 percent or ± 1 ppm for CO or ± 0.5 percent $O_2$ , whichever is less restrictive, respectively.

*10.2 Post-Sampling Calibration Check.* Conduct a stack gas post-sampling calibration check after the stack gas sampling run or set of runs and within 12 hours of the initial calibration. Conduct up-scale and zero calibration checks using the protocol in Section 10.1. Make no changes to the sampling system or EC cell calibration until all post-sampling calibration checks have been recorded. If either the zero or up-scale calibration error exceeds the respective specification in Sections 10.1.2 and 10.1.4 then all measurement data collected since the previous successful calibrations are invalid and re-calibration and re-sampling are required. If the sampling system is disassembled or the EC cell calibration is adjusted, repeat the calibration check before conducting the next analyzer sampling run.

## 11.0 Analytical Procedure

The analytical procedure is fully discussed in Section 8.

## 12.0 Calculations and Data Analysis

Determine the CO and $O_2$ concentrations for each stack gas sampling run by calculating the mean gas concentrations of the data recorded during the "measurement data phase".

## 13.0 Protocol Performance

Use the following protocols to verify consistent analyzer performance during each field sampling day.

*13.1 Measurement Data Phase Performance Check.* Calculate the mean of the readings from the "measurement data phase". The maximum allowable deviation from the mean for each of the individual readings is ± 2 percent, or ± 1 ppm, whichever is less restrictive. Record the mean value and maximum deviation for each gas monitored. Data must conform to Section 10.1.4. The EC cell flow rate must conform to the specification in Section 8.3.

*Example: A measurement data phase is invalid if the maximum deviation of any single reading comprising that mean is greater than* ± 2 percent *or ± 1 ppm (the default criteria). For example, if the mean = 30 ppm, single readings of below 29 ppm and above 31 ppm are disallowed* ).

*13.2 Interference Check.* Before the initial use of the EC cell and interference gas scrubber in the field, and semi-annually thereafter, challenge the interference gas scrubber with NO and $NO_2$ gas standards that are generally recognized as representative of diesel-fueled engine NO and $NO_2$ emission values. Record the responses displayed by the CO EC cell and other pertinent data on Figure 1 or a similar form.

*13.2.1 Interference Response.* The combined NO and $NO_2$ interference response should be less than or equal to ± 5 percent of the up-scale CO calibration gas concentration.

*13.3 Repeatability Check.* Conduct the following check once for each nominal range that is to be used on the CO EC cell within 5 days prior to each field sampling program. If a field sampling program lasts longer than 5 days, repeat this check every 5 days. Immediately repeat the check if the EC cell is replaced or if the EC cell is exposed to gas concentrations greater than 150 percent of the highest up-scale gas concentration.

*13.3.1 Repeatability Check Procedure.* Perform a complete EC cell sampling run (all three phases) by introducing the CO calibration gas to the measurement system and record the response. Follow Section 10.1.3. Use Figure 1 to record all data. Repeat the run three times for a total of four complete runs. During the four repeatability check runs, do not adjust the system except where necessary to achieve the correct calibration gas flow rate at the analyzer.

*13.3.2 Repeatability Check Calculations.* Determine the highest and lowest average "measurement data phase" CO concentrations from the four repeatability check runs and record the results on Figure 1 or a similar form. The

absolute value of the difference between the maximum and minimum average values recorded must not vary more than ± 3 percent or ± 1 ppm of the up-scale gas value, whichever is less restrictive.

## 14.0 Pollution Prevention (Reserved)

## 15.0 Waste Management (Reserved)

## 16.0 Alternative Procedures (Reserved)

## 17.0 References

(1) “Development of an Electrochemical Cell Emission Analyzer Test Protocol”, Topical Report, Phil Juneau, Emission Monitoring, Inc., July 1997.

(2) “Determination of Nitrogen Oxides, Carbon Monoxide, and Oxygen Emissions from Natural Gas-Fired Engines, Boilers, and Process Heaters Using Portable Analyzers”, EMC Conditional Test Protocol 30 (CTM-30), Gas Research Institute Protocol GRI-96/0008, Revision 7, October 13, 1997.

(3) “ICAC Test Protocol for Periodic Monitoring”, EMC Conditional Test Protocol 34 (CTM-034), The Institute of Clean Air Companies, September 8, 1999.

(4) “Code of Federal Regulations”, Protection of Environment, 40 CFR, Part 60, Appendix A, Methods 1-4; 10.

Table 1: Appendix A—Sampling Run Data.

| | | | | | | | | | | | |
|---|---|---|---|---|---|---|---|---|---|---|---|
| Facility_____ Engine I.D._____ Date_____ | | | | | | | | | | | |
| Run Type: | (_) | | | | (_) | | | (_) | | | (_) |
| (X) | Pre-Sample Calibration | | | | Stack Gas Sample | | | Post-Sample Cal. Check | | | Repeatability Check |
| Run # | 1 | 1 | 2 | 2 | 3 | 3 | 4 | 4 | Time | Scrub. OK | Flow- Rate |
| Gas | $O_2$ | CO | $O_2$ | CO | $O_2$ | CO | $O_2$ | CO | | | |
| Sample Cond. Phase | | | | | | | | | | | |
| ″ | | | | | | | | | | | |
| ″ | | | | | | | | | | | |
| ″ | | | | | | | | | | | |
| ″ | | | | | | | | | | | |
| Measurement Data Phase | | | | | | | | | | | |
| ″ | | | | | | | | | | | |
| ″ | | | | | | | | | | | |
| ″ | | | | | | | | | | | |
| ″ | | | | | | | | | | | |
| ″ | | | | | | | | | | | |
| ″ | | | | | | | | | | | |
| ″ | | | | | | | | | | | |
| ″ | | | | | | | | | | | |
| ″ | | | | | | | | | | | |

| | | | | | | | | | | | |
|---|---|---|---|---|---|---|---|---|---|---|---|
| " | | | | | | | | | | | |
| Mean | | | | | | | | | | | |
| Refresh Phase | | | | | | | | | | | |
| " | | | | | | | | | | | |
| " | | | | | | | | | | | |
| " | | | | | | | | | | | |
| " | | | | | | | | | | | |

[78 FR 6721, Jan. 30, 2013]

# Attachment P
# To Part 70 Operating Permit Renewal No. T129-25424-00003

[Downloaded from the eCFR on May 10, 2013]

**Title 40: Protection of Environment**

**Part 63, Subpart DDDDD—National Emission Standards for Hazardous Air Pollutants for Major Sources: Industrial, Commercial, and Institutional Boilers and Process Heaters**

Source: 76 FR 15664, Mar. 21, 2011, unless otherwise noted.

**What This Subpart Covers**

**§ 63.7480 What is the purpose of this subpart?**

This subpart establishes national emission limitations and work practice standards for hazardous air pollutants (HAP) emitted from industrial, commercial, and institutional boilers and process heaters located at major sources of HAP. This subpart also establishes requirements to demonstrate initial and continuous compliance with the emission limitations and work practice standards.

**§ 63.7485 Am I subject to this subpart?**

You are subject to this subpart if you own or operate an industrial, commercial, or institutional boiler or process heater as defined in § 63.7575 that is located at, or is part of, a major source of HAP, except as specified in § 63.7491. For purposes of this subpart, a major source of HAP is as defined in § 63.2, except that for oil and natural gas production facilities, a major source of HAP is as defined in § 63.7575.

[78 FR 7162, Jan. 31, 2013]

**§ 63.7490 What is the affected source of this subpart?**

(a) This subpart applies to new, reconstructed, and existing affected sources as described in paragraphs (a)(1) and (2) of this section.

(1) The affected source of this subpart is the collection at a major source of all existing industrial, commercial, and institutional boilers and process heaters within a subcategory as defined in § 63.7575.

(2) The affected source of this subpart is each new or reconstructed industrial, commercial, or institutional boiler or process heater, as defined in § 63.7575, located at a major source.

(b) A boiler or process heater is new if you commence construction of the boiler or process heater after June 4, 2010, and you meet the applicability criteria at the time you commence construction.

(c) A boiler or process heater is reconstructed if you meet the reconstruction criteria as defined in § 63.2, you commence reconstruction after June 4, 2010, and you meet the applicability criteria at the time you commence reconstruction.

(d) A boiler or process heater is existing if it is not new or reconstructed.

(e) An existing electric utility steam generating unit (EGU) that meets the applicability requirements of this subpart after the effective date of this final rule due to a change (e.g., fuel switch) is considered to be an existing source under this subpart.

[76 FR 15664, Mar. 21, 2011, as amended at 78 FR 7162, Jan. 31, 2013]

**§ 63.7491 Are any boilers or process heaters not subject to this subpart?**

The types of boilers and process heaters listed in paragraphs (a) through (n) of this section are not subject to this subpart.

(a) An electric utility steam generating unit (EGU) covered by subpart UUUUU of this part.

(b) A recovery boiler or furnace covered by subpart MM of this part.

(c) A boiler or process heater that is used specifically for research and development, including test steam boilers used to provide steam for testing the propulsion systems on military vessels. This does not include units that provide heat or steam to a process at a research and development facility.

(d) A hot water heater as defined in this subpart.

(e) A refining kettle covered by subpart X of this part.

(f) An ethylene cracking furnace covered by subpart YY of this part.

(g) Blast furnace stoves as described in EPA-453/R-01-005 (incorporated by reference, see § 63.14).

(h) Any boiler or process heater that is part of the affected source subject to another subpart of this part, such as boilers and process heaters used as control devices to comply with subparts JJJ, OOO, PPP, and U of this part.

(i) Any boiler or process heater that is used as a control device to comply with another subpart of this part, or part 60, part 61, or part 65 of this chapter provided that at least 50 percent of the average annual heat input during any 3 consecutive calendar years to the boiler or process heater is provided by regulated gas streams that are subject to another standard.

(j) Temporary boilers as defined in this subpart.

(k) Blast furnace gas fuel-fired boilers and process heaters as defined in this subpart.

(l) Any boiler specifically listed as an affected source in any standard(s) established under section 129 of the Clean Air Act.

(m) A unit that burns hazardous waste covered by Subpart EEE of this part. A unit that is exempt from Subpart EEE as specified in § 63.1200(b) is not covered by Subpart EEE.

[76 FR 15664, Mar. 21, 2011, as amended at 78 FR 7162, Jan. 31, 2013]

EDITORIAL NOTE: At 78 FR 7162, Jan. 31, 2013, § 63.7491 was amended by revising paragraph (n). However, there is no paragraph (n) to revise.

**§ 63.7495 When do I have to comply with this subpart?**

(a) If you have a new or reconstructed boiler or process heater, you must comply with this subpart by January 31, 2013, or upon startup of your boiler or process heater, whichever is later.

(b) If you have an existing boiler or process heater, you must comply with this subpart no later than January 31, 2016, except as provided in § 63.6(i).

(c) If you have an area source that increases its emissions or its potential to emit such that it becomes a major source of HAP, paragraphs (c)(1) and (2) of this section apply to you.

(1) Any new or reconstructed boiler or process heater at the existing source must be in compliance with this subpart upon startup.

(2) Any existing boiler or process heater at the existing source must be in compliance with this subpart within 3 years after the source becomes a major source.

(d) You must meet the notification requirements in § 63.7545 according to the schedule in § 63.7545 and in subpart A of this part. Some of the notifications must be submitted before you are required to comply with the emission limits and work practice standards in this subpart.

(e) If you own or operate an industrial, commercial, or institutional boiler or process heater and would be subject to this subpart except for the exemption in § 63.7491(l) for commercial and industrial solid waste incineration units covered by part 60, subpart CCCC or subpart DDDD, and you cease combusting solid waste, you must be in compliance with this subpart on the effective date of the switch from waste to fuel.

(f) If you own or operate an existing EGU that becomes subject to this subpart after January 31, 2013, you must be in compliance with the applicable existing source provisions of this subpart on the effective date such unit becomes subject to this subpart.

(g) If you own or operate an existing industrial, commercial, or institutional boiler or process heater and would be subject to this subpart except for a exemption in § 63.7491(i) that becomes subject to this subpart after January 31, 2013, you must be in compliance with the applicable existing source provisions of this subpart within 3 years after such unit becomes subject to this subpart.

[76 FR 15664, Mar. 21, 2011, as amended at 78 FR 7162, Jan. 31, 2013]

EDITORIAL NOTE: At 78 FR 7162, Jan. 31, 2013, § 63.7495 was amended by adding paragraph (e). However, there is already a paragraph (e).

**Emission Limitations and Work Practice Standards**

**§ 63.7499 What are the subcategories of boilers and process heaters?**

The subcategories of boilers and process heaters, as defined in § 63.7575 are:

(a) Pulverized coal/solid fossil fuel units.

(b) Stokers designed to burn coal/solid fossil fuel.

(c) Fluidized bed units designed to burn coal/solid fossil fuel.

(d) Stokers/sloped grate/other units designed to burn kiln dried biomass/bio-based solid.

(e) Fluidized bed units designed to burn biomass/bio-based solid.

(f) Suspension burners designed to burn biomass/bio-based solid.

(g) Fuel cells designed to burn biomass/bio-based solid.

(h) Hybrid suspension/grate burners designed to burn wet biomass/bio-based solid.

(i) Stokers/sloped grate/other units designed to burn wet biomass/bio-based solid.

(j) Dutch ovens/pile burners designed to burn biomass/bio-based solid.

(k) Units designed to burn liquid fuel that are non-continental units.

(l) Units designed to burn gas 1 fuels.

(m) Units designed to burn gas 2 (other) gases.

(n) Metal process furnaces.

(o) Limited-use boilers and process heaters.

(p) Units designed to burn solid fuel.

(q) Units designed to burn liquid fuel.

(r) Units designed to burn coal/solid fossil fuel.

(s) Fluidized bed units with an integrated fluidized bed heat exchanger designed to burn coal/solid fossil fuel.

(t) Units designed to burn heavy liquid fuel.

(u) Units designed to burn light liquid fuel.

[76 FR 15664, Mar. 21, 2011, as amended at 78 FR 7163, Jan. 31, 2013]

**§ 63.7500 What emission limitations, work practice standards, and operating limits must I meet?**

(a) You must meet the requirements in paragraphs (a)(1) through (3) of this section, except as provided in paragraphs (b), through (e) of this section. You must meet these requirements at all times the affected unit is operating, except as provided in paragraph (f) of this section.

(1) You must meet each emission limit and work practice standard in Tables 1 through 3, and 11 through 13 to this subpart that applies to your boiler or process heater, for each boiler or process heater at your source, except as provided under § 63.7522. The output-based emission limits, in units of pounds per million Btu of steam output, in Tables 1 or 2 to this subpart are an alternative applicable only to boilers and process heaters that generate steam. The output-based emission limits, in units of pounds per megawatt-hour, in Tables 1 or 2 to this subpart are an alternative applicable only to boilers that generate electricity. If you operate a new boiler or process heater, you can choose to comply with alternative limits as discussed in paragraphs (a)(1)(i) through (a)(1)(iii) of this section, but on or after January 31, 2016, you must comply with the emission limits in Table 1 to this subpart.

(i) If your boiler or process heater commenced construction or reconstruction after June 4, 2010 and before May 20, 2011, you may comply with the emission limits in Table 1 or 11 to this subpart until January 31, 2016.

(ii) If your boiler or process heater commenced construction or reconstruction after May 20, 2011 and before December 23, 2011, you may comply with the emission limits in Table 1 or 12 to this subpart until January 31, 2016.

(iii) If your boiler or process heater commenced construction or reconstruction after December 23, 2011 and before January 31, 2013, you may comply with the emission limits in Table 1 or 13 to this subpart until January 31, 2016.

(2) You must meet each operating limit in Table 4 to this subpart that applies to your boiler or process heater. If you use a control device or combination of control devices not covered in Table 4 to this subpart, or you wish to establish and monitor an alternative operating limit or an alternative monitoring parameter, you must apply to the EPA Administrator for approval of alternative monitoring under § 63.8(f).

(3) At all times, you must operate and maintain any affected source (as defined in § 63.7490), including associated air pollution control equipment and monitoring equipment, in a manner consistent with safety and good air pollution

control practices for minimizing emissions. Determination of whether such operation and maintenance procedures are being used will be based on information available to the Administrator that may include, but is not limited to, monitoring results, review of operation and maintenance procedures, review of operation and maintenance records, and inspection of the source.

(b) As provided in § 63.6(g), EPA may approve use of an alternative to the work practice standards in this section.

(c) Limited-use boilers and process heaters must complete a tune-up every 5 years as specified in § 63.7540. They are not subject to the emission limits in Tables 1 and 2 or 11 through 13 to this subpart, the annual tune-up, or the energy assessment requirements in Table 3 to this subpart, or the operating limits in Table 4 to this subpart.

(d) Boilers and process heaters with a heat input capacity of less than or equal to 5 million Btu per hour in the units designed to burn gas 2 (other) fuels subcategory or units designed to burn light liquid fuels subcategory must complete a tune-up every 5 years as specified in § 63.7540.

(e) Boilers and process heaters in the units designed to burn gas 1 fuels subcategory with a heat input capacity of less than or equal to 5 million Btu per hour must complete a tune-up every 5 years as specified in § 63.7540. Boilers and process heaters in the units designed to burn gas 1 fuels subcategory with a heat input capacity greater than 5 million Btu per hour and less than 10 million Btu per hour must complete a tune-up every 2 years as specified in § 63.7540. Boilers and process heaters in the units designed to burn gas 1 fuels subcategory are not subject to the emission limits in Tables 1 and 2 or 11 through 13 to this subpart, or the operating limits in Table 4 to this subpart.

(f) These standards apply at all times the affected unit is operating, except during periods of startup and shutdown during which time you must comply only with Table 3 to this subpart.

[76 FR 15664, Mar. 21, 2011, as amended at 78 FR 7163, Jan. 31, 2013]

**§ 63.7501 Affirmative Defense for Violation of Emission Standards During Malfunction.**

In response to an action to enforce the standards set forth in § 63.7500 you may assert an affirmative defense to a claim for civil penalties for violations of such standards that are caused by malfunction, as defined at § 63.2. Appropriate penalties may be assessed if you fail to meet your burden of proving all of the requirements in the affirmative defense. The affirmative defense shall not be available for claims for injunctive relief.

(a) *Assertion of affirmative defense.* To establish the affirmative defense in any action to enforce such a standard, you must timely meet the reporting requirements in paragraph (b) of this section, and must prove by a preponderance of evidence that:

(1) The violation:

(i) Was caused by a sudden, infrequent, and unavoidable failure of air pollution control equipment, process equipment, or a process to operate in a normal or usual manner; and

(ii) Could not have been prevented through careful planning, proper design, or better operation and maintenance practices; and

(iii) Did not stem from any activity or event that could have been foreseen and avoided, or planned for; and

(iv) Was not part of a recurring pattern indicative of inadequate design, operation, or maintenance; and

(2) Repairs were made as expeditiously as possible when a violation occurred; and

(3) The frequency, amount, and duration of the violation (including any bypass) were minimized to the maximum extent practicable; and

(4) If the violation resulted from a bypass of control equipment or a process, then the bypass was unavoidable to prevent loss of life, personal injury, or severe property damage; and

(5) All possible steps were taken to minimize the impact of the violation on ambient air quality, the environment, and human health; and

(6) All emissions monitoring and control systems were kept in operation if at all possible, consistent with safety and good air pollution control practices; and

(7) All of the actions in response to the violation were documented by properly signed, contemporaneous operating logs; and

(8) At all times, the affected source was operated in a manner consistent with good practices for minimizing emissions; and

(9) A written root cause analysis has been prepared, the purpose of which is to determine, correct, and eliminate the primary causes of the malfunction and the violation resulting from the malfunction event at issue. The analysis shall also specify, using best monitoring methods and engineering judgment, the amount of any emissions that were the result of the malfunction.

(b) *Report.* The owner or operator seeking to assert an affirmative defense shall submit a written report to the Administrator with all necessary supporting documentation, that it has met the requirements set forth in § 63.7500 of this section. This affirmative defense report shall be included in the first periodic compliance, deviation report or excess emission report otherwise required after the initial occurrence of the violation of the relevant standard (which may be the end of any applicable averaging period). If such compliance, deviation report or excess emission report is due less than 45 days after the initial occurrence of the violation, the affirmative defense report may be included in the second compliance, deviation report or excess emission report due after the initial occurrence of the violation of the relevant standard.

[78 FR 7163, Jan. 31, 2013]

**General Compliance Requirements**

**§ 63.7505 What are my general requirements for complying with this subpart?**

(a) You must be in compliance with the emission limits, work practice standards, and operating limits in this subpart. These limits apply to you at all times the affected unit is operating except for the periods noted in § 63.7500(f).

(b) [Reserved]

(c) You must demonstrate compliance with all applicable emission limits using performance stack testing, fuel analysis, or continuous monitoring systems (CMS), including a continuous emission monitoring system (CEMS), continuous opacity monitoring system (COMS), continuous parameter monitoring system (CPMS), or particulate matter continuous parameter monitoring system (PM CPMS), where applicable. You may demonstrate compliance with the applicable emission limit for hydrogen chloride (HCl), mercury, or total selected metals (TSM) using fuel analysis if the emission rate calculated according to § 63.7530(c) is less than the applicable emission limit. (For gaseous fuels, you may not use fuel analyses to comply with the TSM alternative standard or the HCl standard.) Otherwise, you must demonstrate compliance for HCl, mercury, or TSM using performance testing, if subject to an applicable emission limit listed in Tables 1, 2, or 11 through 13 to this subpart.

(d) If you demonstrate compliance with any applicable emission limit through performance testing and subsequent compliance with operating limits (including the use of CPMS), or with a CEMS, or COMS, you must develop a site-specific monitoring plan according to the requirements in paragraphs (d)(1) through (4) of this section for the use of any CEMS, COMS, or CPMS. This requirement also applies to you if you petition the EPA Administrator for alternative monitoring parameters under § 63.8(f).

(1) For each CMS required in this section (including CEMS, COMS, or CPMS), you must develop, and submit to the Administrator for approval upon request, a site-specific monitoring plan that addresses design, data collection, and the quality assurance and quality control elements outlined in § 63.8(d) and the elements described in paragraphs (d)(1)(i) through (iii) of this section. You must submit this site-specific monitoring plan, if requested, at least 60 days before your initial performance evaluation of your CMS. This requirement to develop and submit a site specific monitoring plan does not apply to affected sources with existing CEMS or COMS operated according to the performance specifications under appendix B to part 60 of this chapter and that meet the requirements of § 63.7525. Using the process described in § 63.8(f)(4), you may request approval of alternative monitoring system quality assurance and quality control procedures in place of those specified in this paragraph and, if approved, include the alternatives in your site-specific monitoring plan.

(i) Installation of the CMS sampling probe or other interface at a measurement location relative to each affected process unit such that the measurement is representative of control of the exhaust emissions (e.g., on or downstream of the last control device);

(ii) Performance and equipment specifications for the sample interface, the pollutant concentration or parametric signal analyzer, and the data collection and reduction systems; and

(iii) Performance evaluation procedures and acceptance criteria (e.g., calibrations, accuracy audits, analytical drift).

(2) In your site-specific monitoring plan, you must also address paragraphs (d)(2)(i) through (iii) of this section.

(i) Ongoing operation and maintenance procedures in accordance with the general requirements of § 63.8(c)(1)(ii), (c)(3), and (c)(4)(ii);

(ii) Ongoing data quality assurance procedures in accordance with the general requirements of § 63.8(d); and

(iii) Ongoing recordkeeping and reporting procedures in accordance with the general requirements of § 63.10(c) (as applicable in Table 10 to this subpart), (e)(1), and (e)(2)(i).

(3) You must conduct a performance evaluation of each CMS in accordance with your site-specific monitoring plan.

(4) You must operate and maintain the CMS in continuous operation according to the site-specific monitoring plan.

[76 FR 15664, Mar. 21, 2011, as amended at 78 FR 7164, Jan. 31, 2013]

**Testing, Fuel Analyses, and Initial Compliance Requirements**

**§ 63.7510 What are my initial compliance requirements and by what date must I conduct them?**

(a) For each boiler or process heater that is required or that you elect to demonstrate compliance with any of the applicable emission limits in Tables 1 or 2 or 11 through 13 of this subpart through performance testing, your initial compliance requirements include all the following:

(1) Conduct performance tests according to § 63.7520 and Table 5 to this subpart.

(2) Conduct a fuel analysis for each type of fuel burned in your boiler or process heater according to § 63.7521 and Table 6 to this subpart, except as specified in paragraphs (a)(2)(i) through (iii) of this section.

(i) For each boiler or process heater that burns a single type of fuel, you are not required to conduct a fuel analysis for each type of fuel burned in your boiler or process heater according to § 63.7521 and Table 6 to this subpart. For purposes of this subpart, units that use a supplemental fuel only for startup, unit shutdown, and transient flame stability purposes still qualify as units that burn a single type of fuel, and the supplemental fuel is not subject to the fuel analysis requirements under § 63.7521 and Table 6 to this subpart.

(ii) When natural gas, refinery gas, or other gas 1 fuels are co-fired with other fuels, you are not required to conduct a fuel analysis of those fuels according to § 63.7521 and Table 6 to this subpart. If gaseous fuels other than natural gas, refinery gas, or other gas 1 fuels are co-fired with other fuels and those gaseous fuels are subject to another subpart of this part, part 60, part 61, or part 65, you are not required to conduct a fuel analysis of those fuels according to § 63.7521 and Table 6 to this subpart.

(iii) You are not required to conduct a chlorine fuel analysis for any gaseous fuels. You must conduct a fuel analysis for mercury on gaseous fuels unless the fuel is exempted in paragraphs (a)(2)(i) and (ii) of this section.

(3) Establish operating limits according to § 63.7530 and Table 7 to this subpart.

(4) Conduct CMS performance evaluations according to § 63.7525.

(b) For each boiler or process heater that you elect to demonstrate compliance with the applicable emission limits in Tables 1 or 2 or 11 through 13 to this subpart for HCl, mercury, or TSM through fuel analysis, your initial compliance requirement is to conduct a fuel analysis for each type of fuel burned in your boiler or process heater according to § 63.7521 and Table 6 to this subpart and establish operating limits according to § 63.7530 and Table 8 to this subpart. The fuels described in paragraph (a)(2)(i) and (ii) of this section are exempt from these fuel analysis and operating limit requirements. The fuels described in paragraph (a)(2)(ii) of this section are exempt from the chloride fuel analysis and operating limit requirements. Boilers and process heaters that use a CEMS for mercury or HCl are exempt from the performance testing and operating limit requirements specified in paragraph (a) of this section for the HAP for which CEMS are used.

(c) If your boiler or process heater is subject to a carbon monoxide (CO) limit, your initial compliance demonstration for CO is to conduct a performance test for CO according to Table 5 to this subpart or conduct a performance evaluation of your continuous CO monitor, if applicable, according to § 63.7525(a). Boilers and process heaters that use a CO CEMS to comply with the applicable alternative CO CEMS emission standard listed in Tables 12, or 11 through 13 to this subpart, as specified in § 63.7525(a), are exempt from the initial CO performance testing and oxygen concentration operating limit requirements specified in paragraph (a) of this section.

(d) If your boiler or process heater is subject to a PM limit, your initial compliance demonstration for PM is to conduct a performance test in accordance with § 63.7520 and Table 5 to this subpart.

(e) For existing affected sources (as defined in § 63.7490), you must complete the initial compliance demonstration, as specified in paragraphs (a) through (d) of this section, no later than 180 days after the compliance date that is specified for your source in § 63.7495 and according to the applicable provisions in § 63.7(a)(2) as cited in Table 10 to this subpart, except as specified in paragraph (j) of this section. You must complete an initial tune-up by following the procedures described in § 63.7540(a)(10)(i) through (vi) no later than the compliance date specified in § 63.7495, except as specified in paragraph (j) of this section. You must complete the one-time energy assessment specified in Table 3 to this subpart no later than the compliance date specified in § 63.7495, except as specified in paragraph (j) of this section.

(f) For new or reconstructed affected sources (as defined in § 63.7490), you must complete the initial compliance demonstration with the emission limits no later than July 30, 2013 or within 180 days after startup of the source, whichever is later. If you are demonstrating compliance with an emission limit in Tables 11 through 13 to this subpart that is less stringent (that is, higher) than the applicable emission limit in Table 1 to this subpart, you must demonstrate compliance with the applicable emission limit in Table 1 no later than July 29, 2016.

(g) For new or reconstructed affected sources (as defined in § 63.7490), you must demonstrate initial compliance with the applicable work practice standards in Table 3 to this subpart within the applicable annual, biennial, or 5-year schedule as specified in § 63.7540(a) following the initial compliance date specified in § 63.7495(a). Thereafter, you are required to complete the applicable annual, biennial, or 5-year tune-up as specified in § 63.7540(a).

(h) For affected sources (as defined in § 63.7490) that ceased burning solid waste consistent with § 63.7495(e) and for which the initial compliance date has passed, you must demonstrate compliance within 60 days of the effective date of the waste-to-fuel switch. If you have not conducted your compliance demonstration for this subpart within the previous 12 months, you must complete all compliance demonstrations for this subpart before you commence or recommence combustion of solid waste.

(i) For an existing EGU that becomes subject after January 31, 2013, you must demonstrate compliance within 180 days after becoming an affected source.

(j) For existing affected sources (as defined in § 63.7490) that have not operated between the effective date of the rule and the compliance date that is specified for your source in § 63.7495, you must complete the initial compliance demonstration, if subject to the emission limits in Table 2 to this subpart, as specified in paragraphs (a) through (d) of this section, no later than 180 days after the re-start of the affected source and according to the applicable provisions in § 63.7(a)(2) as cited in Table 10 to this subpart. You must complete an initial tune-up by following the procedures described in § 63.7540(a)(10)(i) through (vi) no later than 30 days after the re-start of the affected source and, if applicable, complete the one-time energy assessment specified in Table 3 to this subpart, no later than the compliance date specified in § 63.7495.

[78 FR 7164, Jan. 31, 2013]

**§ 63.7515 When must I conduct subsequent performance tests, fuel analyses, or tune-ups?**

(a) You must conduct all applicable performance tests according to § 63.7520 on an annual basis, except as specified in paragraphs (b) through (e), (g), and (h) of this section. Annual performance tests must be completed no more than 13 months after the previous performance test, except as specified in paragraphs (b) through (e), (g), and (h) of this section.

(b) If your performance tests for a given pollutant for at least 2 consecutive years show that your emissions are at or below 75 percent of the emission limit (or, in limited instances as specified in Tables 1 and 2 or 11 through 13 to this subpart, at or below the emission limit) for the pollutant, and if there are no changes in the operation of the individual boiler or process heater or air pollution control equipment that could increase emissions, you may choose to conduct performance tests for the pollutant every third year. Each such performance test must be conducted no more than 37 months after the previous performance test. If you elect to demonstrate compliance using emission averaging under § 63.7522, you must continue to conduct performance tests annually. The requirement to test at maximum chloride input level is waived unless the stack test is conducted for HCl. The requirement to test at maximum mercury input level is waived unless the stack test is conducted for mercury. The requirement to test at maximum TSM input level is waived unless the stack test is conducted for TSM.

(c) If a performance test shows emissions exceeded the emission limit or 75 percent of the emission limit (as specified in Tables 1 and 2 or 11 through 13 to this subpart) for a pollutant, you must conduct annual performance tests for that pollutant until all performance tests over a consecutive 2-year period meet the required level (at or below 75 percent of the emission limit, as specified in Tables 1 and 2 or 11 through 13 to this subpart).

(d) If you are required to meet an applicable tune-up work practice standard, you must conduct an annual, biennial, or 5-year performance tune-up according to § 63.7540(a)(10), (11), or (12), respectively. Each annual tune-up specified in § 63.7540(a)(10) must be no more than 13 months after the previous tune-up. Each biennial tune-up specified in § 63.7540(a)(11) must be conducted no more than 25 months after the previous tune-up. Each 5-year tune-up specified in § 63.7540(a)(12) must be conducted no more than 61 months after the previous tune-up. For a new or reconstructed affected source (as defined in § 63.7490), the first annual, biennial, or 5-year tune-up must be no later than 13 months, 25 months, or 61 months, respectively, after the initial startup of the new or reconstructed affected source.

(e) If you demonstrate compliance with the mercury, HCl, or TSM based on fuel analysis, you must conduct a monthly fuel analysis according to § 63.7521 for each type of fuel burned that is subject to an emission limit in Tables 1, 2, or 11 through 13 to this subpart. You may comply with this monthly requirement by completing the fuel analysis any time within the calendar month as long as the analysis is separated from the previous analysis by at least 14 calendar days. If you burn a new type of fuel, you must conduct a fuel analysis before burning the new type of fuel in your boiler or process heater. You must still meet all applicable continuous compliance requirements in § 63.7540. If each of 12 consecutive monthly fuel analyses demonstrates 75 percent or less of the compliance level, you may decrease the fuel analysis frequency to quarterly for that fuel. If any quarterly sample exceeds 75 percent of the compliance level or you begin burning a new type of fuel, you must return to monthly monitoring for that fuel, until 12 months of fuel analyses are again less than 75 percent of the compliance level.

(f) You must report the results of performance tests and the associated fuel analyses within 60 days after the completion of the performance tests. This report must also verify that the operating limits for each boiler or process

heater have not changed or provide documentation of revised operating limits established according to § 63.7530 and Table 7 to this subpart, as applicable. The reports for all subsequent performance tests must include all applicable information required in § 63.7550.

(g) For affected sources (as defined in § 63.7490) that have not operated since the previous compliance demonstration and more than one year has passed since the previous compliance demonstration, you must complete the subsequent compliance demonstration, if subject to the emission limits in Tables 1, 2, or 11 through 13 to this subpart, no later than 180 days after the re-start of the affected source and according to the applicable provisions in § 63.7(a)(2) as cited in Table 10 to this subpart. You must complete a subsequent tune-up by following the procedures described in § 63.7540(a)(10)(i) through (vi) and the schedule described in § 63.7540(a)(13) for units that are not operating at the time of their scheduled tune-up.

(h) If your affected boiler or process heater is in the unit designed to burn light liquid subcategory and you combust ultra low sulfur liquid fuel, you do not need to conduct further performance tests if the pollutants measured during the initial compliance performance tests meet the emission limits in Tables 1 or 2 of this subpart providing you demonstrate ongoing compliance with the emissions limits by monitoring and recording the type of fuel combusted on a monthly basis. If you intend to use a fuel other than ultra low sulfur liquid fuel, natural gas, refinery gas, or other gas 1 fuel, you must conduct new performance tests within 60 days of burning the new fuel type.

(i) If you operate a CO CEMS that meets the Performance Specifications outlined in § 63.7525(a)(3) of this subpart to demonstrate compliance with the applicable alternative CO CEMS emission standard listed in Tables 1, 2, or 11 through 13 to this subpart, you are not required to conduct CO performance tests and are not subject to the oxygen concentration operating limit requirement specified in § 63.7510(a).

[78 FR 7165, Jan. 31, 2013]

**§ 63.7520 What stack tests and procedures must I use?**

(a) You must conduct all performance tests according to § 63.7(c), (d), (f), and (h). You must also develop a site-specific stack test plan according to the requirements in § 63.7(c). You shall conduct all performance tests under such conditions as the Administrator specifies to you based on the representative performance of each boiler or process heater for the period being tested. Upon request, you shall make available to the Administrator such records as may be necessary to determine the conditions of the performance tests.

(b) You must conduct each performance test according to the requirements in Table 5 to this subpart.

(c) You must conduct each performance test under the specific conditions listed in Tables 5 and 7 to this subpart. You must conduct performance tests at representative operating load conditions while burning the type of fuel or mixture of fuels that has the highest content of chlorine and mercury, and TSM if you are opting to comply with the TSM alternative standard and you must demonstrate initial compliance and establish your operating limits based on these performance tests. These requirements could result in the need to conduct more than one performance test. Following each performance test and until the next performance test, you must comply with the operating limit for operating load conditions specified in Table 4 to this subpart.

(d) You must conduct a minimum of three separate test runs for each performance test required in this section, as specified in § 63.7(e)(3). Each test run must comply with the minimum applicable sampling times or volumes specified in Tables 1 and 2 or 11 through 13 to this subpart.

(e) To determine compliance with the emission limits, you must use the F-Factor methodology and equations in sections 12.2 and 12.3 of EPA Method 19 at 40 CFR part 60, appendix A-7 of this chapter to convert the measured particulate matter (PM) concentrations, the measured HCl concentrations, the measured mercury concentrations, and the measured TSM concentrations that result from the performance test to pounds per million Btu heat input emission rates.

(f) Except for a 30-day rolling average based on CEMS (or sorbent trap monitoring system) data, if measurement results for any pollutant are reported as below the method detection level (e.g., laboratory analytical results for one or more sample components are below the method defined analytical detection level), you must use the method detection level as the measured emissions level for that pollutant in calculating compliance. The measured result for

a multiple component analysis (e.g., analytical values for multiple Method 29 fractions both for individual HAP metals and for total HAP metals) may include a combination of method detection level data and analytical data reported above the method detection level.

[76 FR 15664, Mar. 21, 2011, as amended at 78 FR 7166, Jan. 31, 2013]

**§ 63.7521 What fuel analyses, fuel specification, and procedures must I use?**

(a) For solid and liquid fuels, you must conduct fuel analyses for chloride and mercury according to the procedures in paragraphs (b) through (e) of this section and Table 6 to this subpart, as applicable. For solid fuels and liquid fuels, you must also conduct fuel analyses for TSM if you are opting to comply with the TSM alternative standard. For gas 2 (other) fuels, you must conduct fuel analyses for mercury according to the procedures in paragraphs (b) through (e) of this section and Table 6 to this subpart, as applicable. (For gaseous fuels, you may not use fuel analyses to comply with the TSM alternative standard or the HCl standard.) For purposes of complying with this section, a fuel gas system that consists of multiple gaseous fuels collected and mixed with each other is considered a single fuel type and sampling and analysis is only required on the combined fuel gas system that will feed the boiler or process heater. Sampling and analysis of the individual gaseous streams prior to combining is not required. You are not required to conduct fuel analyses for fuels used for only startup, unit shutdown, and transient flame stability purposes. You are required to conduct fuel analyses only for fuels and units that are subject to emission limits for mercury, HCl, or TSM in Tables 1 and 2 or 11 through 13 to this subpart. Gaseous and liquid fuels are exempt from the sampling requirements in paragraphs (c) and (d) of this section and Table 6 to this subpart.

(b) You must develop a site-specific fuel monitoring plan according to the following procedures and requirements in paragraphs (b)(1) and (2) of this section, if you are required to conduct fuel analyses as specified in § 63.7510.

(1) If you intend to use an alternative analytical method other than those required by Table 6 to this subpart, you must submit the fuel analysis plan to the Administrator for review and approval no later than 60 days before the date that you intend to conduct the initial compliance demonstration described in § 63.7510.

(2) You must include the information contained in paragraphs (b)(2)(i) through (vi) of this section in your fuel analysis plan.

(i) The identification of all fuel types anticipated to be burned in each boiler or process heater.

(ii) For each anticipated fuel type, the notification of whether you or a fuel supplier will be conducting the fuel analysis.

(iii) For each anticipated fuel type, a detailed description of the sample location and specific procedures to be used for collecting and preparing the composite samples if your procedures are different from paragraph (c) or (d) of this section. Samples should be collected at a location that most accurately represents the fuel type, where possible, at a point prior to mixing with other dissimilar fuel types.

(iv) For each anticipated fuel type, the analytical methods from Table 6, with the expected minimum detection levels, to be used for the measurement of chlorine or mercury.

(v) If you request to use an alternative analytical method other than those required by Table 6 to this subpart, you must also include a detailed description of the methods and procedures that you are proposing to use. Methods in Table 6 shall be used until the requested alternative is approved.

(vi) If you will be using fuel analysis from a fuel supplier in lieu of site-specific sampling and analysis, the fuel supplier must use the analytical methods required by Table 6 to this subpart.

(c) At a minimum, you must obtain three composite fuel samples for each fuel type according to the procedures in paragraph (c)(1) or (2) of this section, or the methods listed in Table 6 to this subpart, or use an automated sampling mechanism that provides representative composite fuel samples for each fuel type that includes both coarse and fine material.

(1) If sampling from a belt (or screw) feeder, collect fuel samples according to paragraphs (c)(1)(i) and (ii) of this section.

(i) Stop the belt and withdraw a 6-inch wide sample from the full cross-section of the stopped belt to obtain a minimum two pounds of sample. You must collect all the material (fines and coarse) in the full cross-section. You must transfer the sample to a clean plastic bag.

(ii) Each composite sample will consist of a minimum of three samples collected at approximately equal one-hour intervals during the testing period for sampling during performance stack testing. For monthly sampling, each composite sample shall be collected at approximately equal 10-day intervals during the month.

(2) If sampling from a fuel pile or truck, you must collect fuel samples according to paragraphs (c)(2)(i) through (iii) of this section.

(i) For each composite sample, you must select a minimum of five sampling locations uniformly spaced over the surface of the pile.

(ii) At each sampling site, you must dig into the pile to a uniform depth of approximately 18 inches. You must insert a clean shovel into the hole and withdraw a sample, making sure that large pieces do not fall off during sampling; use the same shovel to collect all samples.

(iii) You must transfer all samples to a clean plastic bag for further processing.

(d) You must prepare each composite sample according to the procedures in paragraphs (d)(1) through (7) of this section.

(1) You must thoroughly mix and pour the entire composite sample over a clean plastic sheet.

(2) You must break large sample pieces (e.g., larger than 3 inches) into smaller sizes.

(3) You must make a pie shape with the entire composite sample and subdivide it into four equal parts.

(4) You must separate one of the quarter samples as the first subset.

(5) If this subset is too large for grinding, you must repeat the procedure in paragraph (d)(3) of this section with the quarter sample and obtain a one-quarter subset from this sample.

(6) You must grind the sample in a mill.

(7) You must use the procedure in paragraph (d)(3) of this section to obtain a one-quarter subsample for analysis. If the quarter sample is too large, subdivide it further using the same procedure.

(e) You must determine the concentration of pollutants in the fuel (mercury and/or chlorine and/or TSM) in units of pounds per million Btu of each composite sample for each fuel type according to the procedures in Table 6 to this subpart, for use in Equations 7, 8, and 9 of this subpart.

(f) To demonstrate that a gaseous fuel other than natural gas or refinery gas qualifies as an other gas 1 fuel, as defined in § 63.7575, you must conduct a fuel specification analyses for mercury according to the procedures in paragraphs (g) through (i) of this section and Table 6 to this subpart, as applicable, except as specified in paragraph (f)(1) through (4) of this section.

(1) You are not required to conduct the fuel specification analyses in paragraphs (g) through (i) of this section for natural gas or refinery gas.

(2) You are not required to conduct the fuel specification analyses in paragraphs (g) through (i) of this section for gaseous fuels that are subject to another subpart of this part, part 60, part 61, or part 65.

(3) You are not required to conduct the fuel specification analyses in paragraphs (g) through (i) of this section on gaseous fuels for units that are complying with the limits for units designed to burn gas 2 (other) fuels.

(4) You are not required to conduct the fuel specification analyses in paragraphs (g) through (i) of this section for gas streams directly derived from natural gas at natural gas production sites or natural gas plants.

(g) You must develop and submit a site-specific fuel analysis plan for other gas 1 fuels to the EPA Administrator for review and approval according to the following procedures and requirements in paragraphs (g)(1) and (2) of this section.

(1) If you intend to use an alternative analytical method other than those required by Table 6 to this subpart, you must submit the fuel analysis plan to the Administrator for review and approval no later than 60 days before the date that you intend to conduct the initial compliance demonstration described in § 63.7510.

(2) You must include the information contained in paragraphs (g)(2)(i) through (vi) of this section in your fuel analysis plan.

(i) The identification of all gaseous fuel types other than those exempted from fuel specification analysis under (f)(1) through (3) of this section anticipated to be burned in each boiler or process heater.

(ii) For each anticipated fuel type, the notification of whether you or a fuel supplier will be conducting the fuel specification analysis.

(iii) For each anticipated fuel type, a detailed description of the sample location and specific procedures to be used for collecting and preparing the samples if your procedures are different from the sampling methods contained in Table 6 to this subpart. Samples should be collected at a location that most accurately represents the fuel type, where possible, at a point prior to mixing with other dissimilar fuel types. If multiple boilers or process heaters are fueled by a common fuel stream it is permissible to conduct a single gas specification at the common point of gas distribution.

(iv) For each anticipated fuel type, the analytical methods from Table 6 to this subpart, with the expected minimum detection levels, to be used for the measurement of mercury.

(v) If you request to use an alternative analytical method other than those required by Table 6 to this subpart, you must also include a detailed description of the methods and procedures that you are proposing to use. Methods in Table 6 to this subpart shall be used until the requested alternative is approved.

(vi) If you will be using fuel analysis from a fuel supplier in lieu of site-specific sampling and analysis, the fuel supplier must use the analytical methods required by Table 6 to this subpart.

(h) You must obtain a single fuel sample for each fuel type according to the sampling procedures listed in Table 6 for fuel specification of gaseous fuels.

(i) You must determine the concentration in the fuel of mercury, in units of microgram per cubic meter, dry basis, of each sample for each other gas 1 fuel type according to the procedures in Table 6 to this subpart.

[78 FR 7167, Jan. 31, 2013]

**§ 63.7522 Can I use emissions averaging to comply with this subpart?**

(a) As an alternative to meeting the requirements of § 63.7500 for PM (or TSM), HCl, or mercury on a boiler or process heater-specific basis, if you have more than one existing boiler or process heater in any subcategories located at your facility, you may demonstrate compliance by emissions averaging, if your averaged emissions are not more than 90 percent of the applicable emission limit, according to the procedures in this section. You may not include new boilers or process heaters in an emissions average.

(b) For a group of two or more existing boilers or process heaters in the same subcategory that each vent to a separate stack, you may average PM (or TSM), HCl, or mercury emissions among existing units to demonstrate compliance with the limits in Table 2 to this subpart as specified in paragraph (b)(1) through (3) of this section, if you satisfy the requirements in paragraphs (c) through (g) of this section.

(1) You may average units using a CEMS or PM CPMS for demonstrating compliance.

(2) For mercury and HCl, averaging is allowed as follows:

(i) You may average among units in any of the solid fuel subcategories.

(ii) You may average among units in any of the liquid fuel subcategories.

(iii) You may average among units in a subcategory of units designed to burn gas 2 (other) fuels.

(iv) You may not average across the units designed to burn liquid, units designed to burn solid fuel, and units designed to burn gas 2 (other) subcategories.

(3) For PM (or TSM), averaging is only allowed between units within each of the following subcategories and you may not average across subcategories:

(i) Units designed to burn coal/solid fossil fuel.

(ii) Stokers/sloped grate/other units designed to burn kiln dried biomass/bio-based solids.

(iii) Stokers/sloped grate/other units designed to burn wet biomass/bio-based solids.

(iv) Fluidized bed units designed to burn biomass/bio-based solid.

(v) Suspension burners designed to burn biomass/bio-based solid.

(vi) Dutch ovens/pile burners designed to burn biomass/bio-based solid.

(vii) Fuel Cells designed to burn biomass/bio-based solid.

(viii) Hybrid suspension/grate burners designed to burn wet biomass/bio-based solid.

(ix) Units designed to burn heavy liquid fuel.

(x) Units designed to burn light liquid fuel.

(xi) Units designed to burn liquid fuel that are non-continental units.

(xii) Units designed to burn gas 2 (other) gases.

(c) For each existing boiler or process heater in the averaging group, the emission rate achieved during the initial compliance test for the HAP being averaged must not exceed the emission level that was being achieved on January 31, 2013 or the control technology employed during the initial compliance test must not be less effective for the HAP being averaged than the control technology employed on January 31, 2013.

(d) The averaged emissions rate from the existing boilers and process heaters participating in the emissions averaging option must not exceed 90 percent of the limits in Table 2 to this subpart at all times the affected units are operating following the compliance date specified in § 63.7495.

(e) You must demonstrate initial compliance according to paragraph (e)(1) or (2) of this section using the maximum rated heat input capacity or maximum steam generation capacity of each unit and the results of the initial performance tests or fuel analysis.

(1) You must use Equation 1a or 1b or 1c of this section to demonstrate that the PM (or TSM), HCl, or mercury emissions from all existing units participating in the emissions averaging option for that pollutant do not exceed the emission limits in Table 2 to this subpart. Use Equation 1a if you are complying with the emission limits on a heat input basis, use Equation 1b if you are complying with the emission limits on a steam generation (output) basis, and use Equation 1c if you are complying with the emission limits on a electric generation (output) basis.

$$AveWeightedEmissions = 1.1 \times \sum_{i=1}^{n} (Er \times Hm) \div \sum_{i=1}^{n} Hm \qquad \text{(Eq. 1a)}$$

Where:

AveWeightedEmissions = Average weighted emissions for PM (or TSM), HCl, or mercury, in units of pounds per million Btu of heat input.

Er = Emission rate (as determined during the initial compliance demonstration) of PM (or TSM), HCl, or mercury from unit, i, in units of pounds per million Btu of heat input. Determine the emission rate for PM (or TSM), HCl, or mercury by performance testing according to Table 5 to this subpart, or by fuel analysis for HCl or mercury or TSM using the applicable equation in § 63.7530(c).

Hm = Maximum rated heat input capacity of unit, i, in units of million Btu per hour.

n = Number of units participating in the emissions averaging option.

1.1 = Required discount factor.

$$AveWeightedEmissions = 1.1 \times \sum_{i=1}^{n} (Er \times So) \div \sum_{i=1}^{n} So \qquad \text{(Eq. 1b)}$$

Where:

AveWeightedEmissions = Average weighted emissions for PM (or TSM), HCl, or mercury, in units of pounds per million Btu of steam output.

Er = Emission rate (as determined during the initial compliance demonstration) of PM (or TSM), HCl, or mercury from unit, i, in units of pounds per million Btu of steam output. Determine the emission rate for PM (or TSM), HCl, or mercury by performance testing according to Table 5 to this subpart, or by fuel analysis for HCl or mercury or TSM using the applicable equation in § 63.7530(c). If you are taking credit for energy conservation measures from a unit according to § 63.7533, use the adjusted emission level for that unit, Eadj, determined according to § 63.7533 for that unit.

So = Maximum steam output capacity of unit, i, in units of million Btu per hour, as defined in § 63.7575.

n = Number of units participating in the emissions averaging option.

1.1 = Required discount factor.

$$AveWeightedEmissions = 1.1 \times \sum_{i=1}^{n} (Er \times Eo) \div \sum_{i=1}^{n} Eo \qquad \text{(Eq. 1c)}$$

Where:

AveWeightedEmissions = Average weighted emissions for PM (or TSM), HCl, or mercury, in units of pounds per megawatt hour.

Er = Emission rate (as determined during the initial compliance demonstration) of PM (or TSM), HCl, or mercury from unit, i, in units of pounds per megawatt hour. Determine the emission rate for PM (or TSM), HCl, or mercury by performance testing according to Table 5 to this subpart, or by fuel analysis for HCl or mercury or TSM using the applicable equation in § 63.7530(c). If you are taking credit for energy conservation measures from a unit according to § 63.7533, use the adjusted emission level for that unit, Eadj, determined according to § 63.7533 for that unit.

Eo = Maximum electric generating output capacity of unit, i, in units of megawatt hour, as defined in § 63.7575.

n = Number of units participating in the emissions averaging option.

1.1 = Required discount factor.

(2) If you are not capable of determining the maximum rated heat input capacity of one or more boilers that generate steam, you may use Equation 2 of this section as an alternative to using Equation 1a of this section to demonstrate that the PM (or TSM), HCl, or mercury emissions from all existing units participating in the emissions averaging option do not exceed the emission limits for that pollutant in Table 2 to this subpart that are in pounds per million Btu of heat input.

$$AveWeightedEmissions = 1.1 \times \sum_{i=1}^{n} (Er \times Sm \times Cfi) \div \sum_{i=1}^{n} (Sm \times Cfi) \quad \text{(Eq. 2)}$$

Where:

AveWeightedEmissions = Average weighted emission level for PM (or TSM), HCl, or mercury, in units of pounds per million Btu of heat input.

Er = Emission rate (as determined during the most recent compliance demonstration) of PM (or TSM), HCl, or mercury from unit, i, in units of pounds per million Btu of heat input. Determine the emission rate for PM (or TSM), HCl, or mercury by performance testing according to Table 5 to this subpart, or by fuel analysis for HCl or mercury or TSM using the applicable equation in § 63.7530(c).

Sm = Maximum steam generation capacity by unit, i, in units of pounds per hour.

Cfi = Conversion factor, calculated from the most recent compliance test, in units of million Btu of heat input per pounds of steam generated for unit, i.

1.1 = Required discount factor.

(f) After the initial compliance demonstration described in paragraph (e) of this section, you must demonstrate compliance on a monthly basis determined at the end of every month (12 times per year) according to paragraphs (f)(1) through (3) of this section. The first monthly period begins on the compliance date specified in § 63.7495. If the affected source elects to collect monthly data for up the 11 months preceding the first monthly period, these additional data points can be used to compute the 12-month rolling average in paragraph (f)(3) of this section.

(1) For each calendar month, you must use Equation 3a or 3b or 3c of this section to calculate the average weighted emission rate for that month. Use Equation 3a and the actual heat input for the month for each existing unit participating in the emissions averaging option if you are complying with emission limits on a heat input basis. Use Equation 3b and the actual steam generation for the month if you are complying with the emission limits on a steam generation (output) basis. Use Equation 3c and the actual steam generation for the month if you are complying with the emission limits on a electrical generation (output) basis.

$$AveWeightedEmissions = 1.1 \times \sum_{i=1}^{n} (Er \times Hb) \div \sum_{i=1}^{n} Hb \quad \text{(Eq. 3a)}$$

Where:

AveWeightedEmissions = Average weighted emission level for PM (or TSM), HCl, or mercury, in units of pounds per million Btu of heat input, for that calendar month.

Er = Emission rate (as determined during the most recent compliance demonstration) of PM (or TSM), HCl, or mercury from unit, i, in units of pounds per million Btu of heat input. Determine the emission rate for PM (or TSM), HCl, or mercury by performance testing according to Table 5 to this subpart, or by fuel analysis for HCl or mercury or TSM according to Table 6 to this subpart.

Hb = The heat input for that calendar month to unit, i, in units of million Btu.

n = Number of units participating in the emissions averaging option.

1.1 = Required discount factor.

$$AveWeightedEmissions = 1.1 \times \sum_{i=1}^{n} (Er \times So) \div \sum_{i=1}^{n} So \quad \text{(Eq. 3b)}$$

Where:

AveWeightedEmissions = Average weighted emission level for PM (or TSM), HCl, or mercury, in units of pounds per million Btu of steam output, for that calendar month.

Er = Emission rate (as determined during the most recent compliance demonstration) of PM (or TSM), HCl, or mercury from unit, i, in units of pounds per million Btu of steam output. Determine the emission rate for PM (or TSM), HCl, or mercury by performance testing according to Table 5 to this subpart, or by fuel analysis for HCl or mercury or TSM according to Table 6 to this subpart. If you are taking credit for energy conservation measures from a unit according to § 63.7533, use the adjusted emission level for that unit, $E_{adj}$ , determined according to § 63.7533 for that unit.

So = The steam output for that calendar month from unit, i, in units of million Btu, as defined in § 63.7575.

n = Number of units participating in the emissions averaging option.

1.1 = Required discount factor.

$$AveWeightedEmissions = 1.1 \times \sum_{i=1}^{n} (Er \times Eo) \div \sum_{i=1}^{n} Eo \quad \text{(Eq. 3c)}$$

Where:

AveWeightedEmissions = Average weighted emission level for PM (or TSM), HCl, or mercury, in units of pounds per megawatt hour, for that calendar month.

Er = Emission rate (as determined during the most recent compliance demonstration) of PM (or TSM), HCl, or mercury from unit, i, in units of pounds per megawatt hour. Determine the emission rate for PM (or TSM), HCl, or mercury by performance testing according to Table 5 to this subpart, or by fuel analysis for HCl or mercury or TSM according to Table 6 to this subpart. If you are taking credit for energy conservation measures from a unit according to § 63.7533, use the adjusted emission level for that unit, $E_{adj}$ , determined according to § 63.7533 for that unit.

Eo = The electric generating output for that calendar month from unit, i, in units of megawatt hour, as defined in § 63.7575.

n = Number of units participating in the emissions averaging option.

1.1 = Required discount factor.

(2) If you are not capable of monitoring heat input, you may use Equation 4 of this section as an alternative to using Equation 3a of this section to calculate the average weighted emission rate using the actual steam generation from the boilers participating in the emissions averaging option.

$$AveWeightedEmissions = 1.1 \times \sum_{i=1}^{n} (Er \times Sa \times Cfi) \div \sum_{i=1}^{n} (Sa \times Cfi) \quad \text{(Eq. 4)}$$

Where:

AveWeightedEmissions = average weighted emission level for PM (or TSM), HCl, or mercury, in units of pounds per million Btu of heat input for that calendar month.

Er = Emission rate (as determined during the most recent compliance demonstration of PM (or TSM), HCl, or mercury from unit, i, in units of pounds per million Btu of heat input. Determine the emission rate for PM (or TSM), HCl, or mercury by performance testing according to Table 5 to this subpart, or by fuel analysis for HCl or mercury or TSM according to Table 6 to this subpart.

Sa = Actual steam generation for that calendar month by boiler, i, in units of pounds.

Cfi = Conversion factor, as calculated during the most recent compliance test, in units of million Btu of heat input per pounds of steam generated for boiler, i.

1.1 = Required discount factor.

(3) Until 12 monthly weighted average emission rates have been accumulated, calculate and report only the average weighted emission rate determined under paragraph (f)(1) or (2) of this section for each calendar month. After 12 monthly weighted average emission rates have been accumulated, for each subsequent calendar month, use Equation 5 of this section to calculate the 12-month rolling average of the monthly weighted average emission rates for the current calendar month and the previous 11 calendar months.

$$Eavg = \sum_{i=1}^{n} ERi \div 12 \quad \text{(Eq. 5)}$$

Where:

Eavg = 12-month rolling average emission rate, (pounds per million Btu heat input)

ERi = Monthly weighted average, for calendar month “i” (pounds per million Btu heat input), as calculated by paragraph (f)(1) or (2) of this section.

(g) You must develop, and submit upon request to the applicable Administrator for review and approval, an implementation plan for emission averaging according to the following procedures and requirements in paragraphs (g)(1) through (4) of this section.

(1) You must submit the implementation plan no later than 180 days before the date that the facility intends to demonstrate compliance using the emission averaging option.

(2) You must include the information contained in paragraphs (g)(2)(i) through (vii) of this section in your implementation plan for all emission sources included in an emissions average:

(i) The identification of all existing boilers and process heaters in the averaging group, including for each either the applicable HAP emission level or the control technology installed as of January 31, 2013 and the date on which you are requesting emission averaging to commence;

(ii) The process parameter (heat input or steam generated) that will be monitored for each averaging group;

(iii) The specific control technology or pollution prevention measure to be used for each emission boiler or process heater in the averaging group and the date of its installation or application. If the pollution prevention measure reduces or eliminates emissions from multiple boilers or process heaters, the owner or operator must identify each boiler or process heater;

(iv) The test plan for the measurement of PM (or TSM), HCl, or mercury emissions in accordance with the requirements in § 63.7520;

(v) The operating parameters to be monitored for each control system or device consistent with § 63.7500 and Table 4, and a description of how the operating limits will be determined;

(vi) If you request to monitor an alternative operating parameter pursuant to § 63.7525, you must also include:

(A) A description of the parameter(s) to be monitored and an explanation of the criteria used to select the parameter(s); and

(B) A description of the methods and procedures that will be used to demonstrate that the parameter indicates proper operation of the control device; the frequency and content of monitoring, reporting, and recordkeeping requirements; and a demonstration, to the satisfaction of the Administrator, that the proposed monitoring frequency is sufficient to represent control device operating conditions; and

(vii) A demonstration that compliance with each of the applicable emission limit(s) will be achieved under representative operating load conditions. Following each compliance demonstration and until the next compliance demonstration, you must comply with the operating limit for operating load conditions specified in Table 4 to this subpart.

(3) The Administrator shall review and approve or disapprove the plan according to the following criteria:

(i) Whether the content of the plan includes all of the information specified in paragraph (g)(2) of this section; and

(ii) Whether the plan presents sufficient information to determine that compliance will be achieved and maintained.

(4) The applicable Administrator shall not approve an emission averaging implementation plan containing any of the following provisions:

(i) Any averaging between emissions of differing pollutants or between differing sources; or

(ii) The inclusion of any emission source other than an existing unit in the same subcategories.

(h) For a group of two or more existing affected units, each of which vents through a single common stack, you may average PM (or TSM), HCl, or mercury emissions to demonstrate compliance with the limits for that pollutant in Table 2 to this subpart if you satisfy the requirements in paragraph (i) or (j) of this section.

(i) For a group of two or more existing units in the same subcategories, each of which vents through a common emissions control system to a common stack, that does not receive emissions from units in other subcategories or categories, you may treat such averaging group as a single existing unit for purposes of this subpart and comply with the requirements of this subpart as if the group were a single unit.

(j) For all other groups of units subject to the common stack requirements of paragraph (h) of this section, including situations where the exhaust of affected units are each individually controlled and then sent to a common stack, the owner or operator may elect to:

(1) Conduct performance tests according to procedures specified in § 63.7520 in the common stack if affected units from other subcategories vent to the common stack. The emission limits that the group must comply with are determined by the use of Equation 6 of this section.

$$En = \sum_{i=1}^{n} (ELi \times Hi) \div \sum_{i=1}^{n} Hi \qquad \text{(Eq. 6)}$$

Where:

En = HAP emission limit, pounds per million British thermal units (lb/MMBtu), parts per million (ppm), or nanograms per dry standard cubic meter (ng/dscm).

ELi = Appropriate emission limit from Table 2 to this subpart for unit i, in units of lb/MMBtu, ppm or ng/dscm.

Hi = Heat input from unit i, MMBtu.

(2) Conduct performance tests according to procedures specified in § 63.7520 in the common stack. If affected units and non-affected units vent to the common stack, the non-affected units must be shut down or vented to a different stack during the performance test unless the facility determines to demonstrate compliance with the non-affected units venting to the stack; and

(3) Meet the applicable operating limit specified in § 63.7540 and Table 8 to this subpart for each emissions control system (except that, if each unit venting to the common stack has an applicable opacity operating limit, then a single continuous opacity monitoring system may be located in the common stack instead of in each duct to the common stack).

(k) The common stack of a group of two or more existing boilers or process heaters in the same subcategories subject to paragraph (h) of this section may be treated as a separate stack for purposes of paragraph (b) of this section and included in an emissions averaging group subject to paragraph (b) of this section.

[76 FR 15664, Mar. 21, 2011, as amended at 78 FR 7168, Jan. 31, 2013]

**§ 63.7525 What are my monitoring, installation, operation, and maintenance requirements?**

(a) If your boiler or process heater is subject to a CO emission limit in Tables 1, 2, or 11 through 13 to this subpart, you must install, operate, and maintain an oxygen analyzer system, as defined in § 63.7575, or install, certify, operate and maintain continuous emission monitoring systems for CO and oxygen according to the procedures in paragraphs (a)(1) through (7) of this section.

(1) Install the CO CEMS and oxygen analyzer by the compliance date specified in § 63.7495. The CO and oxygen levels shall be monitored at the same location at the outlet of the boiler or process heater.

(2) To demonstrate compliance with the applicable alternative CO CEMS emission standard listed in Tables 1, 2, or 11 through 13 to this subpart, you must install, certify, operate, and maintain a CO CEMS and an oxygen analyzer according to the applicable procedures under Performance Specification 4, 4A, or 4B at 40 CFR part 60, appendix B, the site-specific monitoring plan developed according to § 63.7505(d), and the requirements in § 63.7540(a)(8) and paragraph (a) of this section. Any boiler or process heater that has a CO CEMS that is compliant with Performance Specification 4, 4A, or 4B at 40 CFR part 60, appendix B, a site-specific monitoring plan developed according to § 63.7505(d), and the requirements in § 63.7540(a)(8) and paragraph (a) of this section must use the CO CEMS to comply with the applicable alternative CO CEMS emission standard listed in Tables 1, 2, or 11 through 13 to this subpart.

(i) You must conduct a performance evaluation of each CO CEMS according to the requirements in § 63.8(e) and according to Performance Specification 4, 4A, or 4B at 40 CFR part 60, appendix B.

(ii) During each relative accuracy test run of the CO CEMS, you must be collect emission data for CO concurrently (or within a 30- to 60-minute period) by both the CO CEMS and by Method 10, 10A, or 10B at 40 CFR part 60, appendix A-4. The relative accuracy testing must be at representative operating conditions.

(iii) You must follow the quality assurance procedures (e.g., quarterly accuracy determinations and daily calibration drift tests) of Procedure 1 of appendix F to part 60. The measurement span value of the CO CEMS must be two times the applicable CO emission limit, expressed as a concentration.

(iv) Any CO CEMS that does not comply with § 63.7525(a) cannot be used to meet any requirement in this subpart to demonstrate compliance with a CO emission limit listed in Tables 1, 2, or 11 through 13 to this subpart.

(v) For a new unit, complete the initial performance evaluation no later than July 30, 2013, or 180 days after the date of initial startup, whichever is later. For an existing unit, complete the initial performance evaluation no later than July 29, 2016.

(3) Complete a minimum of one cycle of CO and oxygen CEMS operation (sampling, analyzing, and data recording) for each successive 15-minute period. Collect CO and oxygen data concurrently. Collect at least four CO and oxygen CEMS data values representing the four 15-minute periods in an hour, or at least two 15-minute data values during an hour when CEMS calibration, quality assurance, or maintenance activities are being performed.

(4) Reduce the CO CEMS data as specified in § 63.8(g)(2).

(5) Calculate one-hour arithmetic averages, corrected to 3 percent oxygen from each hour of CO CEMS data in parts per million CO concentration. The one-hour arithmetic averages required shall be used to calculate the 30-day or 10-day rolling average emissions. Use Equation 19-19 in section 12.4.1 of Method 19 of 40 CFR part 60, appendix A-7 for calculating the average CO concentration from the hourly values.

(6) For purposes of collecting CO data, operate the CO CEMS as specified in § 63.7535(b). You must use all the data collected during all periods in calculating data averages and assessing compliance, except that you must exclude certain data as specified in § 63.7535(c). Periods when CO data are unavailable may constitute monitoring deviations as specified in § 63.7535(d).

(7) Operate an oxygen trim system with the oxygen level set no lower than the lowest hourly average oxygen concentration measured during the most recent CO performance test as the operating limit for oxygen according to Table 7 to this subpart.

(b) If your boiler or process heater is in the unit designed to burn coal/solid fossil fuel subcategory or the unit designed to burn heavy liquid subcategory and has an average annual heat input rate greater than 250 MMBtu per hour from solid fossil fuel and/or heavy liquid, and you demonstrate compliance with the PM limit instead of the alternative TSM limit, you must install, certify, maintain, and operate a PM CPMS monitoring emissions discharged to the atmosphere and record the output of the system as specified in paragraphs (b)(1) through (4) of this section. As an alternative to use of a PM CPMS to demonstrate compliance with the PM limit, you may choose to use a PM CEMS. If you choose to use a PM CEMS to demonstrate compliance with the PM limit instead of the alternative TSM limit, you must install, certify, maintain, and operate a PM CEMS monitoring emissions discharged to the atmosphere and record the output of the system as specified in paragraph (b)(5) through (8) of this section. For other boilers or process heaters, you may elect to use a PM CPMS or PM CEMS operated in accordance with this section in lieu of using other CMS for monitoring PM compliance (e.g., bag leak detectors, ESP secondary power, PM scrubber pressure). Owners of boilers and process heaters who elect to comply with the alternative TSM limit are not required to install a PM CPMS.

(1) Install, certify, operate, and maintain your PM CPMS according to the procedures in your approved site-specific monitoring plan developed in accordance with § 63.7505(d), the requirements in § 63.7540(a)(9), and paragraphs (b)(1)(i) through (iii) of this section.

(i) The operating principle of the PM CPMS must be based on in-stack or extractive light scatter, light scintillation, beta attenuation, or mass accumulation detection of PM in the exhaust gas or representative exhaust gas sample. The reportable measurement output from the PM CPMS must be expressed as milliamps.

(ii) The PM CPMS must have a cycle time (i.e., period required to complete sampling, measurement, and reporting for each measurement) no longer than 60 minutes.

(iii) The PM CPMS must be capable of detecting and responding to PM concentrations of no greater than 0.5 milligram per actual cubic meter.

(2) For a new unit, complete the initial performance evaluation no later than July 30, 2013, or 180 days after the date of initial startup, whichever is later. For an existing unit, complete the initial performance evaluation no later than July 29, 2016.

(3) Collect PM CPMS hourly average output data for all boiler or process heater operating hours except as indicated in § 63.7535(a) through (d). Express the PM CPMS output as milliamps.

(4) Calculate the arithmetic 30-day rolling average of all of the hourly average PM CPMS output data collected during all boiler or process heater operating hours (milliamps).

(5) Install, certify, operate, and maintain your PM CEMS according to the procedures in your approved site-specific monitoring plan developed in accordance with § 63.7505(d), the requirements in § 63.7540(a)(9), and paragraphs (b)(5)(i) through (iv) of this section.

(i) You shall conduct a performance evaluation of the PM CEMS according to the applicable requirements of § 60.8(e), and Performance Specification 11 at 40 CFR part 60, appendix B of this chapter.

(ii) During each PM correlation testing run of the CEMS required by Performance Specification 11 at 40 CFR part 60, appendix B of this chapter, you shall collect PM and oxygen (or carbon dioxide) data concurrently (or within a 30-to 60-minute period) by both the CEMS and conducting performance tests using Method 5 at 40 CFR part 60, appendix A-3 or Method 17 at 40 CFR part 60, appendix A-6 of this chapter.

(iii) You shall perform quarterly accuracy determinations and daily calibration drift tests in accordance with Procedure 2 at 40 CFR part 60, appendix F of this chapter. You must perform Relative Response Audits annually and perform Response Correlation Audits every 3 years.

(iv) Within 60 days after the date of completing each CEMS relative accuracy test audit or performance test conducted to demonstrate compliance with this subpart, you must submit the relative accuracy test audit data and performance test data to the EPA by successfully submitting the data electronically into the EPA's Central Data Exchange by using the Electronic Reporting Tool (see *http://www.epa.gov/ttn/chief/ert/erttool.html/* ).

(6) For a new unit, complete the initial performance evaluation no later than July 30, 2013, or 180 days after the date of initial startup, whichever is later. For an existing unit, complete the initial performance evaluation no later than July 29, 2016.

(7) Collect PM CEMS hourly average output data for all boiler or process heater operating hours except as indicated in § 63.7535(a) through (d).

(8) Calculate the arithmetic 30-day rolling average of all of the hourly average PM CEMS output data collected during all boiler or process heater operating hours.

(c) If you have an applicable opacity operating limit in this rule, and are not otherwise required or elect to install and operate a PM CPMS, PM CEMS, or a bag leak detection system, you must install, operate, certify and maintain each COMS according to the procedures in paragraphs (c)(1) through (7) of this section by the compliance date specified in § 63.7495.

(1) Each COMS must be installed, operated, and maintained according to Performance Specification 1 at appendix B to part 60 of this chapter.

(2) You must conduct a performance evaluation of each COMS according to the requirements in § 63.8(e) and according to Performance Specification 1 at appendix B to part 60 of this chapter.

(3) As specified in § 63.8(c)(4)(i), each COMS must complete a minimum of one cycle of sampling and analyzing for each successive 10-second period and one cycle of data recording for each successive 6-minute period.

(4) The COMS data must be reduced as specified in § 63.8(g)(2).

(5) You must include in your site-specific monitoring plan procedures and acceptance criteria for operating and maintaining each COMS according to the requirements in § 63.8(d). At a minimum, the monitoring plan must include a daily calibration drift assessment, a quarterly performance audit, and an annual zero alignment audit of each COMS.

(6) You must operate and maintain each COMS according to the requirements in the monitoring plan and the requirements of § 63.8(e). You must identify periods the COMS is out of control including any periods that the COMS fails to pass a daily calibration drift assessment, a quarterly performance audit, or an annual zero alignment audit. Any 6-minute period for which the monitoring system is out of control and data are not available for a required calculation constitutes a deviation from the monitoring requirements.

(7) You must determine and record all the 6-minute averages (and daily block averages as applicable) collected for periods during which the COMS is not out of control.

(d) If you have an operating limit that requires the use of a CMS other than a PM CPMS or COMS, you must install, operate, and maintain each CMS according to the procedures in paragraphs (d)(1) through (5) of this section by the compliance date specified in § 63.7495.

(1) The CPMS must complete a minimum of one cycle of operation every 15-minutes. You must have a minimum of four successive cycles of operation, one representing each of the four 15-minute periods in an hour, to have a valid hour of data.

(2) You must operate the monitoring system as specified in § 63.7535(b), and comply with the data calculation requirements specified in § 63.7535(c).

(3) Any 15-minute period for which the monitoring system is out-of-control and data are not available for a required calculation constitutes a deviation from the monitoring requirements. Other situations that constitute a monitoring deviation are specified in § 63.7535(d).

(4) You must determine the 30-day rolling average of all recorded readings, except as provided in § 63.7535(c).

(5) You must record the results of each inspection, calibration, and validation check.

(e) If you have an operating limit that requires the use of a flow monitoring system, you must meet the requirements in paragraphs (d) and (e)(1) through (4) of this section.

(1) You must install the flow sensor and other necessary equipment in a position that provides a representative flow.

(2) You must use a flow sensor with a measurement sensitivity of no greater than 2 percent of the design flow rate.

(3) You must minimize, consistent with good engineering practices, the effects of swirling flow or abnormal velocity distributions due to upstream and downstream disturbances.

(4) You must conduct a flow monitoring system performance evaluation in accordance with your monitoring plan at the time of each performance test but no less frequently than annually.

(f) If you have an operating limit that requires the use of a pressure monitoring system, you must meet the requirements in paragraphs (d) and (f)(1) through (6) of this section.

(1) Install the pressure sensor(s) in a position that provides a representative measurement of the pressure ( *e.g.* , PM scrubber pressure drop).

(2) Minimize or eliminate pulsating pressure, vibration, and internal and external corrosion consistent with good engineering practices.

(3) Use a pressure sensor with a minimum tolerance of 1.27 centimeters of water or a minimum tolerance of 1 percent of the pressure monitoring system operating range, whichever is less.

(4) Perform checks at least once each process operating day to ensure pressure measurements are not obstructed ( *e.g.* , check for pressure tap pluggage daily).

(5) Conduct a performance evaluation of the pressure monitoring system in accordance with your monitoring plan at the time of each performance test but no less frequently than annually.

(6) If at any time the measured pressure exceeds the manufacturer's specified maximum operating pressure range, conduct a performance evaluation of the pressure monitoring system in accordance with your monitoring plan and confirm that the pressure monitoring system continues to meet the performance requirements in you monitoring plan. Alternatively, install and verify the operation of a new pressure sensor.

(g) If you have an operating limit that requires a pH monitoring system, you must meet the requirements in paragraphs (d) and (g)(1) through (4) of this section.

(1) Install the pH sensor in a position that provides a representative measurement of scrubber effluent pH.

(2) Ensure the sample is properly mixed and representative of the fluid to be measured.

(3) Conduct a performance evaluation of the pH monitoring system in accordance with your monitoring plan at least once each process operating day.

(4) Conduct a performance evaluation (including a two-point calibration with one of the two buffer solutions having a pH within 1 of the pH of the operating limit) of the pH monitoring system in accordance with your monitoring plan at the time of each performance test but no less frequently than quarterly.

(h) If you have an operating limit that requires a secondary electric power monitoring system for an electrostatic precipitator (ESP) operated with a wet scrubber, you must meet the requirements in paragraphs (h)(1) and (2) of this section.

(1) Install sensors to measure (secondary) voltage and current to the precipitator collection plates.

(2) Conduct a performance evaluation of the electric power monitoring system in accordance with your monitoring plan at the time of each performance test but no less frequently than annually.

(i) If you have an operating limit that requires the use of a monitoring system to measure sorbent injection rate (e.g., weigh belt, weigh hopper, or hopper flow measurement device), you must meet the requirements in paragraphs (d) and (i)(1) through (2) of this section.

(1) Install the system in a position(s) that provides a representative measurement of the total sorbent injection rate.

(2) Conduct a performance evaluation of the sorbent injection rate monitoring system in accordance with your monitoring plan at the time of each performance test but no less frequently than annually.

(j) If you are not required to use a PM CPMS and elect to use a fabric filter bag leak detection system to comply with the requirements of this subpart, you must install, calibrate, maintain, and continuously operate the bag leak detection system as specified in paragraphs (j)(1) through (6) of this section.

(1) You must install a bag leak detection sensor(s) in a position(s) that will be representative of the relative or absolute PM loadings for each exhaust stack, roof vent, or compartment (e.g., for a positive pressure fabric filter) of the fabric filter.

(2) Conduct a performance evaluation of the bag leak detection system in accordance with your monitoring plan and consistent with the guidance provided in EPA-454/R-98-015 (incorporated by reference, see § 63.14).

(3) Use a bag leak detection system certified by the manufacturer to be capable of detecting PM emissions at concentrations of 10 milligrams per actual cubic meter or less.

(4) Use a bag leak detection system equipped with a device to record continuously the output signal from the sensor.

(5) Use a bag leak detection system equipped with a system that will alert plant operating personnel when an increase in relative PM emissions over a preset level is detected. The alert must easily recognizable (e.g., heard or seen) by plant operating personnel.

(6) Where multiple bag leak detectors are required, the system's instrumentation and alert may be shared among detectors.

(k) For each unit that meets the definition of limited-use boiler or process heater, you must keep fuel use records for the days the boiler or process heater was operating.

(l) For each unit for which you decide to demonstrate compliance with the mercury or HCl emissions limits in Tables 1 or 2 or 11 through 13 of this subpart by use of a CEMS for mercury or HCl, you must install, certify, maintain, and operate a CEMS measuring emissions discharged to the atmosphere and record the output of the system as specified in paragraphs (l)(1) through (8) of this section. For HCl, this option for an affected unit takes effect on the date a final performance specification for a HCl CEMS is published in the FEDERAL REGISTER or the date of approval of a site-specific monitoring plan.

(1) Notify the Administrator one month before starting use of the CEMS, and notify the Administrator one month before stopping use of the CEMS.

(2) Each CEMS shall be installed, certified, operated, and maintained according to the requirements in § 63.7540(a)(14) for a mercury CEMS and § 63.7540(a)(15) for a HCl CEMS.

(3) For a new unit, you must complete the initial performance evaluation of the CEMS by the latest of the dates specified in paragraph (l)(3)(i) through (iii) of this section.

(i) No later than July 30, 2013.

(ii) No later 180 days after the date of initial startup.

(iii) No later 180 days after notifying the Administrator before starting to use the CEMS in place of performance testing or fuel analysis to demonstrate compliance.

(4) For an existing unit, you must complete the initial performance evaluation by the latter of the two dates specified in paragraph (l)(4)(i) and (ii) of this section.

(i) No later than July 29, 2016.

(ii) No later 180 days after notifying the Administrator before starting to use the CEMS in place of performance testing or fuel analysis to demonstrate compliance.

(5) Compliance with the applicable emissions limit shall be determined based on the 30-day rolling average of the hourly arithmetic average emissions rates using the continuous monitoring system outlet data. The 30-day rolling arithmetic average emission rate (lb/MMBtu) shall be calculated using the equations in EPA Reference Method 19 at 40 CFR part 60, appendix A-7, but substituting the mercury or HCl concentration for the pollutant concentrations normally used in Method 19.

(6) Collect CEMS hourly averages for all operating hours on a 30-day rolling average basis. Collect at least four CMS data values representing the four 15-minute periods in an hour, or at least two 15-minute data values during an hour when CMS calibration, quality assurance, or maintenance activities are being performed.

(7) The one-hour arithmetic averages required shall be expressed in lb/MMBtu and shall be used to calculate the boiler 30-day and 10-day rolling average emissions.

(8) You are allowed to substitute the use of the PM, mercury or HCl CEMS for the applicable fuel analysis, annual performance test, and operating limits specified in Table 4 to this subpart to demonstrate compliance with the PM, mercury or HCl emissions limit, and if you are using an acid gas wet scrubber or dry sorbent injection control technology to comply with the HCl emission limit, you are allowed to substitute the use of a sulfur dioxide ($SO_2$ ) CEMS for the applicable fuel analysis, annual performance test, and operating limits specified in Table 4 to this subpart to demonstrate compliance with HCl emissions limit.

(m) If your unit is subject to a HCl emission limit in Tables 1, 2, or 11 through 13 of this subpart and you have an acid gas wet scrubber or dry sorbent injection control technology and you use an $SO_2$ CEMS, you must install the monitor at the outlet of the boiler or process heater, downstream of all emission control devices, and you must install, certify, operate, and maintain the CEMS according to part 75 of this chapter.

(1) The $SO_2$ CEMS must be installed by the compliance date specified in § 63.7495.

(2) For on-going quality assurance (QA), the $SO_2$ CEMS must meet the applicable daily, quarterly, and semiannual or annual requirements in sections 2.1 through 2.3 of appendix B to part 75 of this chapter, with the following addition: You must perform the linearity checks required in section 2.2 of appendix B to part 75 of this chapter if the $SO_2$ CEMS has a span value of 30 ppm or less.

(3) For a new unit, the initial performance evaluation shall be completed no later than July 30, 2013, or 180 days after the date of initial startup, whichever is later. For an existing unit, the initial performance evaluation shall be completed no later than July 29, 2016.

(4) For purposes of collecting $SO_2$ data, you must operate the $SO_2$ CEMS as specified in § 63.7535(b). You must use all the data collected during all periods in calculating data averages and assessing compliance, except that you must exclude certain data as specified in § 63.7535(c). Periods when $SO_2$ data are unavailable may constitute monitoring deviations as specified in § 63.7535(d).

(5) Collect CEMS hourly averages for all operating hours on a 30-day rolling average basis.

(6) Use only unadjusted, quality-assured $SO_2$ concentration values in the emissions calculations; do not apply bias adjustment factors to the part 75 $SO_2$ data and do not use part 75 substitute data values.

[76 FR 15664, Mar. 21, 2011, as amended at 78 FR 7171, Jan. 31, 2013]

**§ 63.7530 How do I demonstrate initial compliance with the emission limitations, fuel specifications and work practice standards?**

(a) You must demonstrate initial compliance with each emission limit that applies to you by conducting initial performance tests and fuel analyses and establishing operating limits, as applicable, according to § 63.7520, paragraphs (b) and (c) of this section, and Tables 5 and 7 to this subpart. The requirement to conduct a fuel analysis is not applicable for units that burn a single type of fuel, as specified by § 63.7510(a)(2)(i). If applicable, you must also install, operate, and maintain all applicable CMS (including CEMS, COMS, and CPMS) according to § 63.7525.

(b) If you demonstrate compliance through performance testing, you must establish each site-specific operating limit in Table 4 to this subpart that applies to you according to the requirements in § 63.7520, Table 7 to this subpart, and paragraph (b)(4) of this section, as applicable. You must also conduct fuel analyses according to § 63.7521 and establish maximum fuel pollutant input levels according to paragraphs (b)(1) through (3) of this section, as applicable, and as specified in § 63.7510(a)(2). (Note that § 63.7510(a)(2) exempts certain fuels from the fuel analysis requirements.) However, if you switch fuel(s) and cannot show that the new fuel(s) does (do) not increase the

chlorine, mercury, or TSM input into the unit through the results of fuel analysis, then you must repeat the performance test to demonstrate compliance while burning the new fuel(s).

(1) You must establish the maximum chlorine fuel input (Clinput) during the initial fuel analysis according to the procedures in paragraphs (b)(1)(i) through (iii) of this section.

(i) You must determine the fuel type or fuel mixture that you could burn in your boiler or process heater that has the highest content of chlorine.

(ii) During the fuel analysis for hydrogen chloride, you must determine the fraction of the total heat input for each fuel type burned (Qi) based on the fuel mixture that has the highest content of chlorine, and the average chlorine concentration of each fuel type burned (Ci).

(iii) You must establish a maximum chlorine input level using Equation 7 of this section.

$$Clinput = \sum_{i=1}^{n} (Ci \times Qi) \quad \text{(Eq. 7)}$$

Where:

Clinput = Maximum amount of chlorine entering the boiler or process heater through fuels burned in units of pounds per million Btu.

Ci = Arithmetic average concentration of chlorine in fuel type, i, analyzed according to § 63.7521, in units of pounds per million Btu.

Qi = Fraction of total heat input from fuel type, i, based on the fuel mixture that has the highest content of chlorine. If you do not burn multiple fuel types during the performance testing, it is not necessary to determine the value of this term. Insert a value of “1” for Qi.

n = Number of different fuel types burned in your boiler or process heater for the mixture that has the highest content of chlorine.

(2) You must establish the maximum mercury fuel input level (Mercuryinput) during the initial fuel analysis using the procedures in paragraphs (b)(2)(i) through (iii) of this section.

(i) You must determine the fuel type or fuel mixture that you could burn in your boiler or process heater that has the highest content of mercury.

(ii) During the compliance demonstration for mercury, you must determine the fraction of total heat input for each fuel burned (Qi) based on the fuel mixture that has the highest content of mercury, and the average mercury concentration of each fuel type burned (HGi).

(iii) You must establish a maximum mercury input level using Equation 8 of this section.

$$Mercuryinput = \sum_{i=1}^{n} (HGi \times Qi) \quad \text{(Eq. 8)}$$

Where:

Mercuryinput = Maximum amount of mercury entering the boiler or process heater through fuels burned in units of pounds per million Btu.

HGi = Arithmetic average concentration of mercury in fuel type, i, analyzed according to § 63.7521, in units of pounds per million Btu.

Qi = Fraction of total heat input from fuel type, i, based on the fuel mixture that has the highest mercury content. If you do not burn multiple fuel types during the performance test, it is not necessary to determine the value of this term. Insert a value of “1” for Qi.

n = Number of different fuel types burned in your boiler or process heater for the mixture that has the highest content of mercury.

(3) If you opt to comply with the alternative TSM limit, you must establish the maximum TSM fuel input (TSMinput) for solid or liquid fuels during the initial fuel analysis according to the procedures in paragraphs (b)(3)(i) through (iii) of this section.

(i) You must determine the fuel type or fuel mixture that you could burn in your boiler or process heater that has the highest content of TSM.

(ii) During the fuel analysis for TSM, you must determine the fraction of the total heat input for each fuel type burned (Qi) based on the fuel mixture that has the highest content of TSM, and the average TSM concentration of each fuel type burned (TSMi).

(iii) You must establish a maximum TSM input level using Equation 9 of this section.

$$TSMinput = \sum_{i=1}^{n} (TSMi \times Qi) \qquad \text{(Eq. 9)}$$

Where:

TSMinput = Maximum amount of TSM entering the boiler or process heater through fuels burned in units of pounds per million Btu.

TSMi = Arithmetic average concentration of TSM in fuel type, i, analyzed according to § 63.7521, in units of pounds per million Btu.

Qi = Fraction of total heat input from fuel type, i, based on the fuel mixture that has the highest content of TSM. If you do not burn multiple fuel types during the performance testing, it is not necessary to determine the value of this term. Insert a value of “1” for Qi.

n = Number of different fuel types burned in your boiler or process heater for the mixture that has the highest content of TSM.

(4) You must establish parameter operating limits according to paragraphs (b)(4)(i) through (ix) of this section. As indicated in Table 4 to this subpart, you are not required to establish and comply with the operating parameter limits when you are using a CEMS to monitor and demonstrate compliance with the applicable emission limit for that control device parameter.

(i) For a wet acid gas scrubber, you must establish the minimum scrubber effluent pH and liquid flow rate as defined in § 63.7575, as your operating limits during the performance test during which you demonstrate compliance with your applicable limit. If you use a wet scrubber and you conduct separate performance tests for HCl and mercury emissions, you must establish one set of minimum scrubber effluent pH, liquid flow rate, and pressure drop operating limits. The minimum scrubber effluent pH operating limit must be established during the HCl performance test. If you conduct multiple performance tests, you must set the minimum liquid flow rate operating limit at the higher of the minimum values established during the performance tests.

(ii) For any particulate control device (e.g., ESP, particulate wet scrubber, fabric filter) for which you use a PM CPMS, you must establish your PM CPMS operating limit and determine compliance with it according to paragraphs (b)(4)(ii)(A) through (F) of this section.

(A) Determine your operating limit as the average PM CPMS output value recorded during the most recent performance test run demonstrating compliance with the filterable PM emission limit or at the PM CPMS output value

corresponding to 75 percent of the emission limit if your PM performance test demonstrates compliance below 75 percent of the emission limit. You must verify an existing or establish a new operating limit after each repeated performance test. You must repeat the performance test annually and reassess and adjust the site-specific operating limit in accordance with the results of the performance test.

( *1* ) Your PM CPMS must provide a 4-20 milliamp output and the establishment of its relationship to manual reference method measurements must be determined in units of milliamps.

( *2* ) Your PM CPMS operating range must be capable of reading PM concentrations from zero to a level equivalent to at least two times your allowable emission limit. If your PM CPMS is an auto-ranging instrument capable of multiple scales, the primary range of the instrument must be capable of reading PM concentration from zero to a level equivalent to two times your allowable emission limit.

( *3* ) During the initial performance test or any such subsequent performance test that demonstrates compliance with the PM limit, record and average all milliamp output values from the PM CPMS for the periods corresponding to the compliance test runs (e.g., average all your PM CPMS output values for three corresponding 2-hour Method 5I test runs).

(B) If the average of your three PM performance test runs are below 75 percent of your PM emission limit, you must calculate an operating limit by establishing a relationship of PM CPMS signal to PM concentration using the PM CPMS instrument zero, the average PM CPMS values corresponding to the three compliance test runs, and the average PM concentration from the Method 5 or performance test with the procedures in paragraphs (b)(4)(ii)(B)( *1* ) through ( *4* ) of this section.

( *1* ) Determine your instrument zero output with one of the following procedures:

( *i* ) Zero point data for *in-situ* instruments should be obtained by removing the instrument from the stack and monitoring ambient air on a test bench.

( *ii* ) Zero point data for *extractive* instruments should be obtained by removing the extractive probe from the stack and drawing in clean ambient air.

( *iii* ) The zero point may also be established by performing manual reference method measurements when the flue gas is free of PM emissions or contains very low PM concentrations (e.g., when your process is not operating, but the fans are operating or your source is combusting only natural gas) and plotting these with the compliance data to find the zero intercept.

( *iv* ) If none of the steps in paragraphs (b)(4)(ii)(B)( *1* )( *i* ) through ( *iii* ) of this section are possible, you must use a zero output value provided by the manufacturer.

( *2* ) Determine your PM CPMS instrument average in milliamps, and the average of your corresponding three PM compliance test runs, using equation 10.

$$\bar{X} = \frac{1}{n}\sum_{i=1}^{n} X_1 ; \bar{Y} = \frac{1}{n}\sum_{i=1}^{n} Y_1 \qquad \text{(Eq. 10)}$$

Where:

$X_1$ = the PM CPMS data points for the three runs constituting the performance test,

$Y_1$ = the PM concentration value for the three runs constituting the performance test, and

n = the number of data points.

( *3* ) With your instrument zero expressed in milliamps, your three run average PM CPMS milliamp value, and your three run average PM concentration from your three compliance tests, determine a relationship of lb/MMBtu per milliamp with equation 11.

$$R = \frac{Y_1}{(X_1 - z)} \qquad \text{(Eq. 11)}$$

Where:

R = the relative lb/MMBtu per milliamp for your PM CPMS,

$Y_1$ = the three run average lb/MMBtu PM concentration,

$X_1$ = the three run average milliamp output from you PM CPMS, and

z = the milliamp equivalent of your instrument zero determined from (B)(i).

( *4* ) Determine your source specific 30-day rolling average operating limit using the lb/MMBtu per milliamp value from Equation 11 in equation 12, below. This sets your operating limit at the PM CPMS output value corresponding to 75 percent of your emission limit.

$$O_l = z + \frac{0.75(L)}{R} \qquad \text{(Eq. 12)}$$

Where:

$O_l$ = the operating limit for your PM CPMS on a 30-day rolling average, in milliamps.

L = your source emission limit expressed in lb/MMBtu,

z = your instrument zero in milliamps, determined from (B)(i), and

R = the relative lb/MMBtu per milliamp for your PM CPMS, from Equation 11.

(C) If the average of your three PM compliance test runs is at or above 75 percent of your PM emission limit you must determine your 30-day rolling average operating limit by averaging the PM CPMS milliamp output corresponding to your three PM performance test runs that demonstrate compliance with the emission limit using equation 13 and you must submit all compliance test and PM CPMS data according to the reporting requirements in paragraph (b)(4)(ii)(F) of this section.

$$O_h = \frac{1}{n}\sum_{i=1}^{n} X_1 \qquad \text{(Eq. 13)}$$

Where:

$X_1$ = the PM CPMS data points for all runs i,

n = the number of data points, and

$O_h$ = your site specific operating limit, in milliamps.

(D) To determine continuous compliance, you must record the PM CPMS output data for all periods when the process is operating and the PM CPMS is not out-of-control. You must demonstrate continuous compliance by using all quality-assured hourly average data collected by the PM CPMS for all operating hours to calculate the arithmetic

average operating parameter in units of the operating limit (milliamps) on a 30-day rolling average basis, updated at the end of each new operating hour. Use Equation 14 to determine the 30-day rolling average.

$$30-\text{day} = \frac{\sum_{i=1}^{n} Hpv}{n} \qquad \text{(Eq. 14)}$$

Where:

30-day = 30-day average.

Hpvi = is the hourly parameter value for hour i

n = is the number of valid hourly parameter values collected over the previous 720 operating hours.

(E) Use EPA Method 5 of appendix A to part 60 of this chapter to determine PM emissions. For each performance test, conduct three separate runs under the conditions that exist when the affected source is operating at the highest load or capacity level reasonably expected to occur. Conduct each test run to collect a minimum sample volume specified in Tables 1, 2, or 11 through 13 to this subpart, as applicable, for determining compliance with a new source limit or an existing source limit. Calculate the average of the results from three runs to determine compliance. You need not determine the PM collected in the impingers ("back half") of the Method 5 particulate sampling train to demonstrate compliance with the PM standards of this subpart. This shall not preclude the permitting authority from requiring a determination of the "back half" for other purposes.

(F) For PM performance test reports used to set a PM CPMS operating limit, the electronic submission of the test report must also include the make and model of the PM CPMS instrument, serial number of the instrument, analytical principle of the instrument (e.g. beta attenuation), span of the instruments primary analytical range, milliamp value equivalent to the instrument zero output, technique by which this zero value was determined, and the average milliamp signals corresponding to each PM compliance test run. (iii) For a particulate wet scrubber, you must establish the minimum pressure drop and liquid flow rate as defined in § 63.7575, as your operating limits during the three-run performance test during which you demonstrate compliance with your applicable limit. If you use a wet scrubber and you conduct separate performance tests for PM and TSM emissions, you must establish one set of minimum scrubber liquid flow rate and pressure drop operating limits. The minimum scrubber effluent pH operating limit must be established during the HCl performance test. If you conduct multiple performance tests, you must set the minimum liquid flow rate and pressure drop operating limits at the higher of the minimum values established during the performance tests.

(iii) For an electrostatic precipitator (ESP) operated with a wet scrubber, you must establish the minimum total secondary electric power input, as defined in § 63.7575, as your operating limit during the three-run performance test during which you demonstrate compliance with your applicable limit. (These operating limits do not apply to ESP that are operated as dry controls without a wet scrubber.)

(iv) For a dry scrubber, you must establish the minimum sorbent injection rate for each sorbent, as defined in § 63.7575, as your operating limit during the three-run performance test during which you demonstrate compliance with your applicable limit.

(v) For activated carbon injection, you must establish the minimum activated carbon injection rate, as defined in § 63.7575, as your operating limit during the three-run performance test during which you demonstrate compliance with your applicable limit.

(vi) The operating limit for boilers or process heaters with fabric filters that demonstrate continuous compliance through bag leak detection systems is that a bag leak detection system be installed according to the requirements in § 63.7525, and that each fabric filter must be operated such that the bag leak detection system alert is not activated more than 5 percent of the operating time during a 6-month period.

(vii) For a minimum oxygen level, if you conduct multiple performance tests, you must set the minimum oxygen level at the lower of the minimum values established during the performance tests.

(viii) The operating limit for boilers or process heaters that demonstrate continuous compliance with the HCl emission limit using a $SO_2$ CEMS is to install and operate the $SO_2$ according to the requirements in § 63.7525(m) establish a maximum $SO_2$ emission rate equal to the highest hourly average $SO_2$ measurement during the most recent three-run performance test for HCl.

(c) If you elect to demonstrate compliance with an applicable emission limit through fuel analysis, you must conduct fuel analyses according to § 63.7521 and follow the procedures in paragraphs (c)(1) through (5) of this section.

(1) If you burn more than one fuel type, you must determine the fuel mixture you could burn in your boiler or process heater that would result in the maximum emission rates of the pollutants that you elect to demonstrate compliance through fuel analysis.

(2) You must determine the 90th percentile confidence level fuel pollutant concentration of the composite samples analyzed for each fuel type using the one-sided t-statistic test described in Equation 15 of this section.

$$P90 = mean + (SD \times t) \quad \text{(Eq. 15)}$$

Where:

P90 = 90th percentile confidence level pollutant concentration, in pounds per million Btu.

Mean = Arithmetic average of the fuel pollutant concentration in the fuel samples analyzed according to § 63.7521, in units of pounds per million Btu.

SD = Standard deviation of the mean of pollutant concentration in the fuel samples analyzed according to § 63.7521, in units of pounds per million Btu. SD is calculated as the sample standard deviation divided by the square root of the number of samples.

t = t distribution critical value for 90th percentile ($t_{0.1}$ ) probability for the appropriate degrees of freedom (number of samples minus one) as obtained from a t-Distribution Critical Value Table.

(3) To demonstrate compliance with the applicable emission limit for HCl, the HCl emission rate that you calculate for your boiler or process heater using Equation 16 of this section must not exceed the applicable emission limit for HCl.

$$HCl = \sum_{i=1}^{n} (Ci90 \times Qi \times 1.028) \quad \text{(Eq. 16)}$$

Where:

HCl = HCl emission rate from the boiler or process heater in units of pounds per million Btu.

Ci90 = 90th percentile confidence level concentration of chlorine in fuel type, i, in units of pounds per million Btu as calculated according to Equation 11 of this section.

Qi = Fraction of total heat input from fuel type, i, based on the fuel mixture that has the highest content of chlorine. If you do not burn multiple fuel types, it is not necessary to determine the value of this term. Insert a value of “1” for Qi.

n = Number of different fuel types burned in your boiler or process heater for the mixture that has the highest content of chlorine.

1.028 = Molecular weight ratio of HCl to chlorine.

(4) To demonstrate compliance with the applicable emission limit for mercury, the mercury emission rate that you calculate for your boiler or process heater using Equation 17 of this section must not exceed the applicable emission limit for mercury.

$$Mercury = \sum_{i=1}^{n} \left( Hgi90 \times Qi \right) \quad \text{(Eq. 17)}$$

Where:

Mercury = Mercury emission rate from the boiler or process heater in units of pounds per million Btu.

Hgi90 = 90th percentile confidence level concentration of mercury in fuel, i, in units of pounds per million Btu as calculated according to Equation 11 of this section.

Qi = Fraction of total heat input from fuel type, i, based on the fuel mixture that has the highest mercury content. If you do not burn multiple fuel types, it is not necessary to determine the value of this term. Insert a value of “1” for Qi.

n = Number of different fuel types burned in your boiler or process heater for the mixture that has the highest mercury content.

(5) To demonstrate compliance with the applicable emission limit for TSM for solid or liquid fuels, the TSM emission rate that you calculate for your boiler or process heater from solid fuels using Equation 18 of this section must not exceed the applicable emission limit for TSM.

$$Metals = \sum_{i=1}^{n} \left( TSM90i \times Qi \right) \quad \text{(Eq. 18)}$$

Where:

Metals = TSM emission rate from the boiler or process heater in units of pounds per million Btu.

TSMi90 = 90th percentile confidence level concentration of TSM in fuel, i, in units of pounds per million Btu as calculated according to Equation 11 of this section.

Qi = Fraction of total heat input from fuel type, i, based on the fuel mixture that has the highest TSM content. If you do not burn multiple fuel types, it is not necessary to determine the value of this term. Insert a value of “1” for Qi.

n = Number of different fuel types burned in your boiler or process heater for the mixture that has the highest TSM content.

(d) If you own or operate an existing unit with a heat input capacity of less than 10 million Btu per hour or a unit in the unit designed to burn gas 1 subcategory, you must submit a signed statement in the Notification of Compliance Status report that indicates that you conducted a tune-up of the unit.

(e) You must include with the Notification of Compliance Status a signed certification that the energy assessment was completed according to Table 3 to this subpart and is an accurate depiction of your facility at the time of the assessment.

(f) You must submit the Notification of Compliance Status containing the results of the initial compliance demonstration according to the requirements in § 63.7545(e).

(g) If you elect to demonstrate that a gaseous fuel meets the specifications of another gas 1 fuel as defined in § 63.7575, you must conduct an initial fuel specification analyses according to § 63.7521(f) through (i) and according to the frequency listed in § 63.7540(c) and maintain records of the results of the testing as outlined in § 63.7555(g). For samples where the initial mercury specification has not been exceeded, you will include a signed certification with the Notification of Compliance Status that the initial fuel specification test meets the gas specification outlined in the definition of other gas 1 fuels.

(h) If you own or operate a unit subject to emission limits in Tables 1 or 2 or 11 through 13 to this subpart, you must meet the work practice standard according to Table 3 of this subpart. During startup and shutdown, you must only follow the work practice standards according to item 5 of Table 3 of this subpart.

(i) If you opt to comply with the alternative $SO_2$ CEMS operating limit in Tables 4 and 8 to this subpart, you may do so only if your affected boiler or process heater:

(1) Has a system using wet scrubber or dry sorbent injection and $SO_2$ CEMS installed on the unit; and

(2) At all times, you operate the wet scrubber or dry sorbent injection for acid gas control on the unit consistent with § 63.7500(a)(3); and

(3) You establish a unit-specific maximum $SO_2$ operating limit by collecting the minimum hourly $SO_2$ emission rate on the $SO_2$ CEMS during the paired 3-run test for HCl. The maximum $SO_2$ operating limit is equal to the highest hourly average $SO_2$ concentration measured during the most recent HCl performance test.

[76 FR 15664, Mar. 21, 2011, as amended at 78 FR 7174, Jan. 31, 2013]

**§ 63.7533 Can I use efficiency credits earned from implementation of energy conservation measures to comply with this subpart?**

(a) If you elect to comply with the alternative equivalent output-based emission limits, instead of the heat input-based limits listed in Table 2 to this subpart, and you want to take credit for implementing energy conservation measures identified in an energy assessment, you may demonstrate compliance using efficiency credits according to the procedures in this section. You may use this compliance approach for an existing affected boiler for demonstrating initial compliance according to § 63.7522(e) and for demonstrating monthly compliance according to § 63.7522(f). Owners or operators using this compliance approach must establish an emissions benchmark, calculate and document the efficiency credits, develop an Implementation Plan, comply with the general reporting requirements, and apply the efficiency credit according to the procedures in paragraphs (b) through (f) of this section. You cannot use this compliance approach for a new or reconstructed affected boiler. Additional guidance from the Department of Energy on efficiency credits is available at: *http://www.epa.gov/ttn/atw/boiler/boilerpg.html* .

(b) For each existing affected boiler for which you intend to apply emissions credits, establish a benchmark from which emission reduction credits may be generated by determining the actual annual fuel heat input to the affected boiler before initiation of an energy conservation activity to reduce energy demand ( *i.e.,* fuel usage) according to paragraphs (b)(1) through (4) of this section. The benchmark shall be expressed in trillion Btu per year heat input.

(1) The benchmark from which efficiency credits may be generated shall be determined by using the most representative, accurate, and reliable process available for the source. The benchmark shall be established for a one-year period before the date that an energy demand reduction occurs, unless it can be demonstrated that a different time period is more representative of historical operations.

(2) Determine the starting point from which to measure progress. Inventory all fuel purchased and generated on-site (off-gases, residues) in physical units (MMBtu, million cubic feet, etc.).

(3) Document all uses of energy from the affected boiler. Use the most recent data available.

(4) Collect non-energy related facility and operational data to normalize, if necessary, the benchmark to current operations, such as building size, operating hours, etc. If possible, use actual data that are current and timely rather than estimated data.

(c) Efficiency credits can be generated if the energy conservation measures were implemented after January 1, 2008 and if sufficient information is available to determine the appropriate value of credits.

(1) The following emission points cannot be used to generate efficiency credits:

(i) Energy conservation measures implemented on or before January 1, 2008, unless the level of energy demand reduction is increased after January 1, 2008, in which case credit will be allowed only for change in demand reduction achieved after January 1, 2008.

(ii) Efficiency credits on shut-down boilers. Boilers that are shut down cannot be used to generate credits unless the facility provides documentation linking the permanent shutdown to energy conservation measures identified in the energy assessment. In this case, the bench established for the affected boiler to which the credits from the shutdown will be applied must be revised to include the benchmark established for the shutdown boiler.

(2) For all points included in calculating emissions credits, the owner or operator shall:

(i) Calculate annual credits for all energy demand points. Use Equation 19 to calculate credits. Energy conservation measures that meet the criteria of paragraph (c)(1) of this section shall not be included, except as specified in paragraph (c)(1)(i) of this section.

(3) Credits are generated by the difference between the benchmark that is established for each affected boiler, and the actual energy demand reductions from energy conservation measures implemented after January 1, 2008. Credits shall be calculated using Equation 19 of this section as follows:

(i) The overall equation for calculating credits is:

$$ECredits = \left( \sum_{i=1}^{n} EIS_{iactual} \right) \div EI_{baseline} \quad \text{(Eq. 19)}$$

Where:

ECredits = Energy Input Savings for all energy conservation measures implemented for an affected boiler, expressed as a decimal fraction of the baseline energy input.

$EIS_{iactual}$ = Energy Input Savings for each energy conservation measure, i, implemented for an affected boiler, million Btu per year.

$EI_{baseline}$ = Energy Input baseline for the affected boiler, million Btu per year.

n = Number of energy conservation measures included in the efficiency credit for the affected boiler.

(ii) [Reserved]

(d) The owner or operator shall develop, and submit for approval upon request by the Administrator, an Implementation Plan containing all of the information required in this paragraph for all boilers to be included in an efficiency credit approach. The Implementation Plan shall identify all existing affected boilers to be included in applying the efficiency credits. The Implementation Plan shall include a description of the energy conservation measures implemented and the energy savings generated from each measure and an explanation of the criteria used for determining that savings. If requested, you must submit the implementation plan for efficiency credits to the Administrator for review and approval no later than 180 days before the date on which the facility intends to demonstrate compliance using the efficiency credit approach.

(e) The emissions rate as calculated using Equation 20 of this section from each existing boiler participating in the efficiency credit option must be in compliance with the limits in Table 2 to this subpart at all times the affected unit is operating, following the compliance date specified in § 63.7495.

(f) You must use Equation 20 of this section to demonstrate initial compliance by demonstrating that the emissions from the affected boiler participating in the efficiency credit compliance approach do not exceed the emission limits in Table 2 to this subpart.

$$E_{adj} = E_{m} \times (1 - ECredits) \quad \text{(Eq. 20)}$$

Where:

$E_{adj}$ = Emission level adjusted by applying the efficiency credits earned, lb per million Btu steam output (or lb per MWh) for the affected boiler.

$E_m$ = Emissions measured during the performance test, lb per million Btu steam output (or lb per MWh) for the affected boiler.

ECredits = Efficiency credits from Equation 19 for the affected boiler.

(g) As part of each compliance report submitted as required under § 63.7550, you must include documentation that the energy conservation measures implemented continue to generate the credit for use in demonstrating compliance with the emission limits.

[76 FR 15664, Mar. 21, 2011, as amended at 78 FR 7178, Jan. 31, 2013]

**Continuous Compliance Requirements**

**§ 63.7535 Is there a minimum amount of monitoring data I must obtain?**

(a) You must monitor and collect data according to this section and the site-specific monitoring plan required by § 63.7505(d).

(b) You must operate the monitoring system and collect data at all required intervals at all times that each boiler or process heater is operating and compliance is required, except for periods of monitoring system malfunctions or out of control periods (see § 63.8(c)(7) of this part), and required monitoring system quality assurance or control activities, including, as applicable, calibration checks, required zero and span adjustments, and scheduled CMS maintenance as defined in your site-specific monitoring plan. A monitoring system malfunction is any sudden, infrequent, not reasonably preventable failure of the monitoring system to provide valid data. Monitoring system failures that are caused in part by poor maintenance or careless operation are not malfunctions. You are required to complete monitoring system repairs in response to monitoring system malfunctions or out-of-control periods and to return the monitoring system to operation as expeditiously as practicable.

(c) You may not use data recorded during monitoring system malfunctions or out-of-control periods, repairs associated with monitoring system malfunctions or out-of-control periods, or required monitoring system quality assurance or control activities in data averages and calculations used to report emissions or operating levels. You must record and make available upon request results of CMS performance audits and dates and duration of periods when the CMS is out of control to completion of the corrective actions necessary to return the CMS to operation consistent with your site-specific monitoring plan. You must use all the data collected during all other periods in assessing compliance and the operation of the control device and associated control system.

(d) Except for periods of monitoring system malfunctions, repairs associated with monitoring system malfunctions, and required monitoring system quality assurance or quality control activities (including, as applicable, system accuracy audits, calibration checks, and required zero and span adjustments), failure to collect required data is a deviation of the monitoring requirements. In calculating monitoring results, do not use any data collected during periods when the monitoring system is out of control as specified in your site-specific monitoring plan, while conducting repairs associated with periods when the monitoring system is out of control, or while conducting required monitoring system quality assurance or quality control activities. You must calculate monitoring results using all other monitoring data collected while the process is operating. You must report all periods when the monitoring system is out of control in your annual report.

[76 FR 15664, Mar. 21, 2011, as amended at 78 FR 7179, Jan. 31, 2013]

**§ 63.7540 How do I demonstrate continuous compliance with the emission limitations, fuel specifications and work practice standards?**

(a) You must demonstrate continuous compliance with each emission limit in Tables 1 and 2 or 11 through 13 to this subpart, the work practice standards in Table 3 to this subpart, and the operating limits in Table 4 to this subpart that applies to you according to the methods specified in Table 8 to this subpart and paragraphs (a)(1) through (19) of this section.

(1) Following the date on which the initial compliance demonstration is completed or is required to be completed under §§ 63.7 and 63.7510, whichever date comes first, operation above the established maximum or below the established minimum operating limits shall constitute a deviation of established operating limits listed in Table 4 of this subpart except during performance tests conducted to determine compliance with the emission limits or to establish new operating limits. Operating limits must be confirmed or reestablished during performance tests.

(2) As specified in § 63.7550(c), you must keep records of the type and amount of all fuels burned in each boiler or process heater during the reporting period to demonstrate that all fuel types and mixtures of fuels burned would result in either of the following:

(i) Lower emissions of HCl, mercury, and TSM than the applicable emission limit for each pollutant, if you demonstrate compliance through fuel analysis.

(ii) Lower fuel input of chlorine, mercury, and TSM than the maximum values calculated during the last performance test, if you demonstrate compliance through performance testing.

(3) If you demonstrate compliance with an applicable HCl emission limit through fuel analysis for a solid or liquid fuel and you plan to burn a new type of solid or liquid fuel, you must recalculate the HCl emission rate using Equation 12 of § 63.7530 according to paragraphs (a)(3)(i) through (iii) of this section. You are not required to conduct fuel analyses for the fuels described in § 63.7510(a)(2)(i) through (iii). You may exclude the fuels described in § 63.7510(a)(2)(i) through (iii) when recalculating the HCl emission rate.

(i) You must determine the chlorine concentration for any new fuel type in units of pounds per million Btu, based on supplier data or your own fuel analysis, according to the provisions in your site-specific fuel analysis plan developed according to § 63.7521(b).

(ii) You must determine the new mixture of fuels that will have the highest content of chlorine.

(iii) Recalculate the HCl emission rate from your boiler or process heater under these new conditions using Equation 12 of § 63.7530. The recalculated HCl emission rate must be less than the applicable emission limit.

(4) If you demonstrate compliance with an applicable HCl emission limit through performance testing and you plan to burn a new type of fuel or a new mixture of fuels, you must recalculate the maximum chlorine input using Equation 7 of § 63.7530. If the results of recalculating the maximum chlorine input using Equation 7 of § 63.7530 are greater than the maximum chlorine input level established during the previous performance test, then you must conduct a new performance test within 60 days of burning the new fuel type or fuel mixture according to the procedures in § 63.7520 to demonstrate that the HCl emissions do not exceed the emission limit. You must also establish new operating limits based on this performance test according to the procedures in § 63.7530(b). In recalculating the maximum chlorine input and establishing the new operating limits, you are not required to conduct fuel analyses for and include the fuels described in § 63.7510(a)(2)(i) through (iii).

(5) If you demonstrate compliance with an applicable mercury emission limit through fuel analysis, and you plan to burn a new type of fuel, you must recalculate the mercury emission rate using Equation 13 of § 63.7530 according to the procedures specified in paragraphs (a)(5)(i) through (iii) of this section. You are not required to conduct fuel analyses for the fuels described in § 63.7510(a)(2)(i) through (iii). You may exclude the fuels described in § 63.7510(a)(2)(i) through (iii) when recalculating the mercury emission rate.

(i) You must determine the mercury concentration for any new fuel type in units of pounds per million Btu, based on supplier data or your own fuel analysis, according to the provisions in your site-specific fuel analysis plan developed according to § 63.7521(b).

(ii) You must determine the new mixture of fuels that will have the highest content of mercury.

(iii) Recalculate the mercury emission rate from your boiler or process heater under these new conditions using Equation 13 of § 63.7530. The recalculated mercury emission rate must be less than the applicable emission limit.

(6) If you demonstrate compliance with an applicable mercury emission limit through performance testing, and you plan to burn a new type of fuel or a new mixture of fuels, you must recalculate the maximum mercury input using Equation 8 of § 63.7530. If the results of recalculating the maximum mercury input using Equation 8 of § 63.7530 are higher than the maximum mercury input level established during the previous performance test, then you must conduct a new performance test within 60 days of burning the new fuel type or fuel mixture according to the procedures in § 63.7520 to demonstrate that the mercury emissions do not exceed the emission limit. You must also establish new operating limits based on this performance test according to the procedures in § 63.7530(b). You are not required to conduct fuel analyses for the fuels described in § 63.7510(a)(2)(i) through (iii). You may exclude the fuels described in § 63.7510(a)(2)(i) through (iii) when recalculating the mercury emission rate.

(7) If your unit is controlled with a fabric filter, and you demonstrate continuous compliance using a bag leak detection system, you must initiate corrective action within 1 hour of a bag leak detection system alert and complete corrective actions as soon as practical, and operate and maintain the fabric filter system such that the periods which would cause an alert are no more than 5 percent of the operating time during a 6-month period. You must also keep records of the date, time, and duration of each alert, the time corrective action was initiated and completed, and a brief description of the cause of the alert and the corrective action taken. You must also record the percent of the operating time during each 6-month period that the conditions exist for an alert. In calculating this operating time percentage, if inspection of the fabric filter demonstrates that no corrective action is required, no alert time is counted. If corrective action is required, each alert shall be counted as a minimum of 1 hour. If you take longer than 1 hour to initiate corrective action, the alert time shall be counted as the actual amount of time taken to initiate corrective action.

(8) To demonstrate compliance with the applicable alternative CO CEMS emission limit listed in Tables 1, 2, or 11 through 13 to this subpart, you must meet the requirements in paragraphs (a)(8)(i) through (iv) of this section.

(i) Continuously monitor CO according to §§ 63.7525(a) and 63.7535.

(ii) Maintain a CO emission level below or at your applicable alternative CO CEMS-based standard in Tables 1 or 2 or 11 through 13 to this subpart at all times the affected unit is operating.

(iii) Keep records of CO levels according to § 63.7555(b).

(iv) You must record and make available upon request results of CO CEMS performance audits, dates and duration of periods when the CO CEMS is out of control to completion of the corrective actions necessary to return the CO CEMS to operation consistent with your site-specific monitoring plan.

(9) The owner or operator of a boiler or process heater using a PM CPMS or a PM CEMS to meet requirements of this subpart shall install, certify, operate, and maintain the PM CPMS or PM CEMS in accordance with your site-specific monitoring plan as required in § 63.7505(d).

(10) If your boiler or process heater has a heat input capacity of 10 million Btu per hour or greater, you must conduct an annual tune-up of the boiler or process heater to demonstrate continuous compliance as specified in paragraphs (a)(10)(i) through (vi) of this section. This frequency does not apply to limited-use boilers and process heaters, as defined in § 63.7575, or units with continuous oxygen trim systems that maintain an optimum air to fuel ratio.

(i) As applicable, inspect the burner, and clean or replace any components of the burner as necessary (you may delay the burner inspection until the next scheduled unit shutdown). Units that produce electricity for sale may delay the burner inspection until the first outage, not to exceed 36 months from the previous inspection. At units where entry into a piece of process equipment or into a storage vessel is required to complete the tune-up inspections, inspections are required only during planned entries into the storage vessel or process equipment;

(ii) Inspect the flame pattern, as applicable, and adjust the burner as necessary to optimize the flame pattern. The adjustment should be consistent with the manufacturer's specifications, if available;

(iii) Inspect the system controlling the air-to-fuel ratio, as applicable, and ensure that it is correctly calibrated and functioning properly (you may delay the inspection until the next scheduled unit shutdown). Units that produce electricity for sale may delay the inspection until the first outage, not to exceed 36 months from the previous inspection;

(iv) Optimize total emissions of CO. This optimization should be consistent with the manufacturer's specifications, if available, and with any $NO_X$ requirement to which the unit is subject;

(v) Measure the concentrations in the effluent stream of CO in parts per million, by volume, and oxygen in volume percent, before and after the adjustments are made (measurements may be either on a dry or wet basis, as long as it is the same basis before and after the adjustments are made). Measurements may be taken using a portable CO analyzer; and

(vi) Maintain on-site and submit, if requested by the Administrator, an annual report containing the information in paragraphs (a)(10)(vi)(A) through (C) of this section,

(A) The concentrations of CO in the effluent stream in parts per million by volume, and oxygen in volume percent, measured at high fire or typical operating load, before and after the tune-up of the boiler or process heater;

(B) A description of any corrective actions taken as a part of the tune-up; and

(C) The type and amount of fuel used over the 12 months prior to the tune-up, but only if the unit was physically and legally capable of using more than one type of fuel during that period. Units sharing a fuel meter may estimate the fuel used by each unit.

(11) If your boiler or process heater has a heat input capacity of less than 10 million Btu per hour (except as specified in paragraph (a)(12) of this section), you must conduct a biennial tune-up of the boiler or process heater as specified in paragraphs (a)(10)(i) through (vi) of this section to demonstrate continuous compliance.

(12) If your boiler or process heater has a continuous oxygen trim system that maintains an optimum air to fuel ratio, or a heat input capacity of less than or equal to 5 million Btu per hour and the unit is in the units designed to burn gas 1; units designed to burn gas 2 (other); or units designed to burn light liquid subcategories, or meets the definition of limited-use boiler or process heater in § 63.7575, you must conduct a tune-up of the boiler or process heater every 5 years as specified in paragraphs (a)(10)(i) through (vi) of this section to demonstrate continuous compliance. You may delay the burner inspection specified in paragraph (a)(10)(i) of this section until the next scheduled or unscheduled unit shutdown, but you must inspect each burner at least once every 72 months.

(13) If the unit is not operating on the required date for a tune-up, the tune-up must be conducted within 30 calendar days of startup.

(14) If you are using a CEMS measuring mercury emissions to meet requirements of this subpart you must install, certify, operate, and maintain the mercury CEMS as specified in paragraphs (a)(14)(i) and (ii) of this section.

(i) Operate the mercury CEMS in accordance with performance specification 12A of 40 CFR part 60, appendix B or operate a sorbent trap based integrated monitor in accordance with performance specification 12B of 40 CFR part 60, appendix B. The duration of the performance test must be the maximum of 30 unit operating days or 720 hours. For each day in which the unit operates, you must obtain hourly mercury concentration data, and stack gas volumetric flow rate data.

(ii) If you are using a mercury CEMS, you must install, operate, calibrate, and maintain an instrument for continuously measuring and recording the mercury mass emissions rate to the atmosphere according to the requirements of performance specifications 6 and 12A of 40 CFR part 60, appendix B, and quality assurance procedure 6 of 40 CFR part 60, appendix F.

(15) If you are using a CEMS to measure HCl emissions to meet requirements of this subpart, you must install, certify, operate, and maintain the HCl CEMS as specified in paragraphs (a)(15)(i) and (ii) of this section. This option for an affected unit takes effect on the date a final performance specification for an HCl CEMS is published in the FEDERAL REGISTER or the date of approval of a site-specific monitoring plan.

(i) Operate the continuous emissions monitoring system in accordance with the applicable performance specification in 40 CFR part 60, appendix B. The duration of the performance test must be the maximum of 30 unit operating days or 720 hours. For each day in which the unit operates, you must obtain hourly HCl concentration data, and stack gas volumetric flow rate data.

(ii) If you are using a HCl CEMS, you must install, operate, calibrate, and maintain an instrument for continuously measuring and recording the HCl mass emissions rate to the atmosphere according to the requirements of the applicable performance specification of 40 CFR part 60, appendix B, and the quality assurance procedures of 40 CFR part 60, appendix F.

(16) If you demonstrate compliance with an applicable TSM emission limit through performance testing, and you plan to burn a new type of fuel or a new mixture of fuels, you must recalculate the maximum TSM input using Equation 9 of § 63.7530. If the results of recalculating the maximum TSM input using Equation 9 of § 63.7530 are higher than the maximum total selected input level established during the previous performance test, then you must conduct a new performance test within 60 days of burning the new fuel type or fuel mixture according to the procedures in § 63.7520 to demonstrate that the TSM emissions do not exceed the emission limit. You must also establish new operating limits based on this performance test according to the procedures in § 63.7530(b). You are not required to conduct fuel analyses for the fuels described in § 63.7510(a)(2)(i) through (iii). You may exclude the fuels described in § 63.7510(a)(2)(i) through (iii) when recalculating the TSM emission rate.

(17) If you demonstrate compliance with an applicable TSM emission limit through fuel analysis for solid or liquid fuels, and you plan to burn a new type of fuel, you must recalculate the TSM emission rate using Equation 14 of § 63.7530 according to the procedures specified in paragraphs (a)(5)(i) through (iii) of this section. You are not required to conduct fuel analyses for the fuels described in § 63.7510(a)(2)(i) through (iii). You may exclude the fuels described in § 63.7510(a)(2)(i) through (iii) when recalculating the TSM emission rate.

(i) You must determine the TSM concentration for any new fuel type in units of pounds per million Btu, based on supplier data or your own fuel analysis, according to the provisions in your site-specific fuel analysis plan developed according to § 63.7521(b).

(ii) You must determine the new mixture of fuels that will have the highest content of TSM.

(iii) Recalculate the TSM emission rate from your boiler or process heater under these new conditions using Equation 14 of § 63.7530. The recalculated TSM emission rate must be less than the applicable emission limit.

(18) If you demonstrate continuous PM emissions compliance with a PM CPMS you will use a PM CPMS to establish a site-specific operating limit corresponding to the results of the performance test demonstrating compliance with the PM limit. You will conduct your performance test using the test method criteria in Table 5 of this subpart. You will use the PM CPMS to demonstrate continuous compliance with this operating limit. You must repeat the performance test annually and reassess and adjust the site-specific operating limit in accordance with the results of the performance test.

(i) To determine continuous compliance, you must record the PM CPMS output data for all periods when the process is operating and the PM CPMS is not out-of-control. You must demonstrate continuous compliance by using all quality-assured hourly average data collected by the PM CPMS for all operating hours to calculate the arithmetic average operating parameter in units of the operating limit (milliamps) on a 30-day rolling average basis, updated at the end of each new boiler or process heater operating hour.

(ii) For any deviation of the 30-day rolling PM CPMS average value from the established operating parameter limit, you must:

(A) Within 48 hours of the deviation, visually inspect the air pollution control device (APCD);

(B) If inspection of the APCD identifies the cause of the deviation, take corrective action as soon as possible and return the PM CPMS measurement to within the established value; and

(C) Within 30 days of the deviation or at the time of the annual compliance test, whichever comes first, conduct a PM emissions compliance test to determine compliance with the PM emissions limit and to verify or re-establish the

CPMS operating limit. You are not required to conduct additional testing for any deviations that occur between the time of the original deviation and the PM emissions compliance test required under this paragraph.

(iii) PM CPMS deviations from the operating limit leading to more than four required performance tests in a 12-month operating period constitute a separate violation of this subpart.

(19) If you choose to comply with the PM filterable emissions limit by using PM CEMS you must install, certify, operate, and maintain a PM CEMS and record the output of the PM CEMS as specified in paragraphs (a)(19)(i) through (vii) of this section. The compliance limit will be expressed as a 30-day rolling average of the numerical emissions limit value applicable for your unit in Tables 1 or 2 or 11 through 13 of this subpart.

(i) Install and certify your PM CEMS according to the procedures and requirements in Performance Specification 11— Specifications and Test Procedures for Particulate Matter Continuous Emission Monitoring Systems at Stationary Sources in Appendix B to part 60 of this chapter, using test criteria outlined in Table V of this rule. The reportable measurement output from the PM CEMS must be expressed in units of the applicable emissions limit (e.g., lb/MMBtu, lb/MWh).

(ii) Operate and maintain your PM CEMS according to the procedures and requirements in Procedure 2— Quality Assurance Requirements for Particulate Matter Continuous Emission Monitoring Systems at Stationary Sources in Appendix F to part 60 of this chapter.

(A) You must conduct the relative response audit (RRA) for your PM CEMS at least once annually.

(B) You must conduct the relative correlation audit (RCA) for your PM CEMS at least once every 3 years.

(iii) Collect PM CEMS hourly average output data for all boiler operating hours except as indicated in paragraph (i) of this section.

(iv) Calculate the arithmetic 30-day rolling average of all of the hourly average PM CEMS output data collected during all nonexempt boiler or process heater operating hours.

(v) You must collect data using the PM CEMS at all times the unit is operating and at the intervals specified this paragraph (a), except for periods of monitoring system malfunctions, repairs associated with monitoring system malfunctions, and required monitoring system quality assurance or quality control activities.

(vi) You must use all the data collected during all boiler or process heater operating hours in assessing the compliance with your operating limit except:

(A) Any data collected during monitoring system malfunctions, repairs associated with monitoring system malfunctions, or required monitoring system quality assurance or control activities conducted during monitoring system malfunctions in calculations and report any such periods in your annual deviation report;

(B) Any data collected during periods when the monitoring system is out of control as specified in your site-specific monitoring plan, repairs associated with periods when the monitoring system is out of control, or required monitoring system quality assurance or control activities conducted during out of control periods in calculations used to report emissions or operating levels and report any such periods in your annual deviation report;

(C) Any data recorded during periods of startup or shutdown.

(vii) You must record and make available upon request results of PM CEMS system performance audits, dates and duration of periods when the PM CEMS is out of control to completion of the corrective actions necessary to return the PM CEMS to operation consistent with your site-specific monitoring plan.

(b) You must report each instance in which you did not meet each emission limit and operating limit in Tables 1 through 4 or 11 through 13 to this subpart that apply to you. These instances are deviations from the emission limits or operating limits, respectively, in this subpart. These deviations must be reported according to the requirements in § 63.7550.

(c) If you elected to demonstrate that the unit meets the specification for mercury for the unit designed to burn gas 1 subcategory, you must follow the sampling frequency specified in paragraphs (c)(1) through (4) of this section and conduct this sampling according to the procedures in § 63.7521(f) through (i).

(1) If the initial mercury constituents in the gaseous fuels are measured to be equal to or less than half of the mercury specification as defined in § 63.7575, you do not need to conduct further sampling.

(2) If the initial mercury constituents are greater than half but equal to or less than 75 percent of the mercury specification as defined in § 63.7575, you will conduct semi-annual sampling. If 6 consecutive semi-annual fuel analyses demonstrate 50 percent or less of the mercury specification, you do not need to conduct further sampling. If any semi-annual sample exceeds 75 percent of the mercury specification, you must return to monthly sampling for that fuel, until 12 months of fuel analyses again are less than 75 percent of the compliance level.

(3) If the initial mercury constituents are greater than 75 percent of the mercury specification as defined in § 63.7575, you will conduct monthly sampling. If 12 consecutive monthly fuel analyses demonstrate 75 percent or less of the mercury specification, you may decrease the fuel analysis frequency to semi-annual for that fuel.

(4) If the initial sample exceeds the mercury specification as defined in § 63.7575, each affected boiler or process heater combusting this fuel is not part of the unit designed to burn gas 1 subcategory and must be in compliance with the emission and operating limits for the appropriate subcategory. You may elect to conduct additional monthly sampling while complying with these emissions and operating limits to demonstrate that the fuel qualifies as another gas 1 fuel. If 12 consecutive monthly fuel analyses samples are at or below the mercury specification as defined in § 63.7575, each affected boiler or process heater combusting the fuel can elect to switch back into the unit designed to burn gas 1 subcategory until the mercury specification is exceeded.

(d) For startup and shutdown, you must meet the work practice standards according to item 5 of Table 3 of this subpart.

[78 FR 7179, Jan. 31, 2013]

**§ 63.7541 How do I demonstrate continuous compliance under the emissions averaging provision?**

(a) Following the compliance date, the owner or operator must demonstrate compliance with this subpart on a continuous basis by meeting the requirements of paragraphs (a)(1) through (5) of this section.

(1) For each calendar month, demonstrate compliance with the average weighted emissions limit for the existing units participating in the emissions averaging option as determined in § 63.7522(f) and (g).

(2) You must maintain the applicable opacity limit according to paragraphs (a)(2)(i) and (ii) of this section.

(i) For each existing unit participating in the emissions averaging option that is equipped with a dry control system and not vented to a common stack, maintain opacity at or below the applicable limit.

(ii) For each group of units participating in the emissions averaging option where each unit in the group is equipped with a dry control system and vented to a common stack that does not receive emissions from non-affected units, maintain opacity at or below the applicable limit at the common stack.

(3) For each existing unit participating in the emissions averaging option that is equipped with a wet scrubber, maintain the 30-day rolling average parameter values at or above the operating limits established during the most recent performance test.

(4) For each existing unit participating in the emissions averaging option that has an approved alternative operating parameter, maintain the 30-day rolling average parameter values consistent with the approved monitoring plan.

(5) For each existing unit participating in the emissions averaging option venting to a common stack configuration containing affected units from other subcategories, maintain the appropriate operating limit for each unit as specified in Table 4 to this subpart that applies.

(b) Any instance where the owner or operator fails to comply with the continuous monitoring requirements in paragraphs (a)(1) through (5) of this section is a deviation.

[76 FR 15664, Mar. 21, 2011, as amended at 78 FR 7182, Jan. 31, 2013]

**Notification, Reports, and Records**

**§ 63.7545 What notifications must I submit and when?**

(a) You must submit to the Administrator all of the notifications in §§ 63.7(b) and (c), 63.8(e), (f)(4) and (6), and 63.9(b) through (h) that apply to you by the dates specified.

(b) As specified in § 63.9(b)(2), if you startup your affected source before January 31, 2013, you must submit an Initial Notification not later than 120 days after January 31, 2013.

(c) As specified in § 63.9(b)(4) and (5), if you startup your new or reconstructed affected source on or after January 31, 2013, you must submit an Initial Notification not later than 15 days after the actual date of startup of the affected source.

(d) If you are required to conduct a performance test you must submit a Notification of Intent to conduct a performance test at least 60 days before the performance test is scheduled to begin.

(e) If you are required to conduct an initial compliance demonstration as specified in § 63.7530, you must submit a Notification of Compliance Status according to § 63.9(h)(2)(ii). For the initial compliance demonstration for each boiler or process heater, you must submit the Notification of Compliance Status, including all performance test results and fuel analyses, before the close of business on the 60th day following the completion of all performance test and/or other initial compliance demonstrations for all boiler or process heaters at the facility according to § 63.10(d)(2). The Notification of Compliance Status report must contain all the information specified in paragraphs (e)(1) through (8), as applicable. If you are not required to conduct an initial compliance demonstration as specified in § 63.7530(a), the Notification of Compliance Status must only contain the information specified in paragraphs (e)(1) and (8).

(1) A description of the affected unit(s) including identification of which subcategories the unit is in, the design heat input capacity of the unit, a description of the add-on controls used on the unit to comply with this subpart, description of the fuel(s) burned, including whether the fuel(s) were a secondary material determined by you or the EPA through a petition process to be a non-waste under § 241.3 of this chapter, whether the fuel(s) were a secondary material processed from discarded non-hazardous secondary materials within the meaning of § 241.3 of this chapter, and justification for the selection of fuel(s) burned during the compliance demonstration.

(2) Summary of the results of all performance tests and fuel analyses, and calculations conducted to demonstrate initial compliance including all established operating limits, and including:

(i) Identification of whether you are complying with the PM emission limit or the alternative TSM emission limit.

(ii) Identification of whether you are complying with the output-based emission limits or the heat input-based (i.e., lb/MMBtu or ppm) emission limits,

(3) A summary of the maximum CO emission levels recorded during the performance test to show that you have met any applicable emission standard in Tables 1, 2, or 11 through 13 to this subpart, if you are not using a CO CEMS to demonstrate compliance.

(4) Identification of whether you plan to demonstrate compliance with each applicable emission limit through performance testing, a CEMS, or fuel analysis.

(5) Identification of whether you plan to demonstrate compliance by emissions averaging and identification of whether you plan to demonstrate compliance by using efficiency credits through energy conservation:

(i) If you plan to demonstrate compliance by emission averaging, report the emission level that was being achieved or the control technology employed on January 31, 2013.

(ii) [Reserved]

(6) A signed certification that you have met all applicable emission limits and work practice standards.

(7) If you had a deviation from any emission limit, work practice standard, or operating limit, you must also submit a description of the deviation, the duration of the deviation, and the corrective action taken in the Notification of Compliance Status report.

(8) In addition to the information required in § 63.9(h)(2), your notification of compliance status must include the following certification(s) of compliance, as applicable, and signed by a responsible official:

(i) “This facility complies with the required initial tune-up according to the procedures in § 63.7540(a)(10)(i) through (vi).”

(ii) “This facility has had an energy assessment performed according to § 63.7530(e).”

(iii) Except for units that burn only natural gas, refinery gas, or other gas 1 fuel, or units that qualify for a statutory exemption as provided in section 129(g)(1) of the Clean Air Act, include the following: “No secondary materials that are solid waste were combusted in any affected unit.”

(f) If you operate a unit designed to burn natural gas, refinery gas, or other gas 1 fuels that is subject to this subpart, and you intend to use a fuel other than natural gas, refinery gas, gaseous fuel subject to another subpart of this part, part 60, 61, or 65, or other gas 1 fuel to fire the affected unit during a period of natural gas curtailment or supply interruption, as defined in § 63.7575, you must submit a notification of alternative fuel use within 48 hours of the declaration of each period of natural gas curtailment or supply interruption, as defined in § 63.7575. The notification must include the information specified in paragraphs (f)(1) through (5) of this section.

(1) Company name and address.

(2) Identification of the affected unit.

(3) Reason you are unable to use natural gas or equivalent fuel, including the date when the natural gas curtailment was declared or the natural gas supply interruption began.

(4) Type of alternative fuel that you intend to use.

(5) Dates when the alternative fuel use is expected to begin and end.

(g) If you intend to commence or recommence combustion of solid waste, you must provide 30 days prior notice of the date upon which you will commence or recommence combustion of solid waste. The notification must identify:

(1) The name of the owner or operator of the affected source, as defined in § 63.7490, the location of the source, the boiler(s) or process heater(s) that will commence burning solid waste, and the date of the notice.

(2) The currently applicable subcategories under this subpart.

(3) The date on which you became subject to the currently applicable emission limits.

(4) The date upon which you will commence combusting solid waste.

(h) If you have switched fuels or made a physical change to the boiler and the fuel switch or physical change resulted in the applicability of a different subcategory, you must provide notice of the date upon which you switched fuels or made the physical change within 30 days of the switch/change. The notification must identify:

(1) The name of the owner or operator of the affected source, as defined in § 63.7490, the location of the source, the boiler(s) and process heater(s) that have switched fuels, were physically changed, and the date of the notice.

(2) The currently applicable subcategory under this subpart.

(3) The date upon which the fuel switch or physical change occurred.

[76 FR 15664, Mar. 21, 2011, as amended at 78 FR 7183, Jan. 31, 2013]

**§ 63.7550 What reports must I submit and when?**

(a) You must submit each report in Table 9 to this subpart that applies to you.

(b) Unless the EPA Administrator has approved a different schedule for submission of reports under § 63.10(a), you must submit each report, according to paragraph (h) of this section, by the date in Table 9 to this subpart and according to the requirements in paragraphs (b)(1) through (4) of this section. For units that are subject only to a requirement to conduct an annual, biennial, or 5-year tune-up according to § 63.7540(a)(10), (11), or (12), respectively, and not subject to emission limits or operating limits, you may submit only an annual, biennial, or 5-year compliance report, as applicable, as specified in paragraphs (b)(1) through (4) of this section, instead of a semi-annual compliance report.

(1) The first compliance report must cover the period beginning on the compliance date that is specified for each boiler or process heater in § 63.7495 and ending on July 31 or January 31, whichever date is the first date that occurs at least 180 days (or 1, 2, or 5 years, as applicable, if submitting an annual, biennial, or 5-year compliance report) after the compliance date that is specified for your source in § 63.7495.

(2) The first compliance report must be postmarked or submitted no later than July 31 or January 31, whichever date is the first date following the end of the first calendar half after the compliance date that is specified for each boiler or process heater in § 63.7495. The first annual, biennial, or 5-year compliance report must be postmarked or submitted no later than January 31.

(3) Each subsequent compliance report must cover the semiannual reporting period from January 1 through June 30 or the semiannual reporting period from July 1 through December 31. Annual, biennial, and 5-year compliance reports must cover the applicable 1-, 2-, or 5-year periods from January 1 to December 31.

(4) Each subsequent compliance report must be postmarked or submitted no later than July 31 or January 31, whichever date is the first date following the end of the semiannual reporting period. Annual, biennial, and 5-year compliance reports must be postmarked or submitted no later than January 31.

(c) A compliance report must contain the following information depending on how the facility chooses to comply with the limits set in this rule.

(1) If the facility is subject to a the requirements of a tune up they must submit a compliance report with the information in paragraphs (c)(5)(i) through (iv) and (xiv) of this section.

(2) If a facility is complying with the fuel analysis they must submit a compliance report with the information in paragraphs (c)(5)(i) through (iv), (vi), (x), (xi), (xiii), (xv) and paragraph (d) of this section.

(3) If a facility is complying with the applicable emissions limit with performance testing they must submit a compliance report with the information in (c)(5)(i) through (iv), (vi), (vii), (ix), (xi), (xiii), (xv) and paragraph (d) of this section.

(4) If a facility is complying with an emissions limit using a CMS the compliance report must contain the information required in paragraphs (c)(5)(i) through (vi), (xi), (xiii), (xv) through (xvii), and paragraph (e) of this section.

(5)(i) Company and Facility name and address.

(ii) Process unit information, emissions limitations, and operating parameter limitations.

(iii) Date of report and beginning and ending dates of the reporting period.

(iv) The total operating time during the reporting period.

(v) If you use a CMS, including CEMS, COMS, or CPMS, you must include the monitoring equipment manufacturer(s) and model numbers and the date of the last CMS certification or audit.

(vi) The total fuel use by each individual boiler or process heater subject to an emission limit within the reporting period, including, but not limited to, a description of the fuel, whether the fuel has received a non-waste determination by the EPA or your basis for concluding that the fuel is not a waste, and the total fuel usage amount with units of measure.

(vii) If you are conducting performance tests once every 3 years consistent with § 63.7515(b) or (c), the date of the last 2 performance tests and a statement as to whether there have been any operational changes since the last performance test that could increase emissions.

(viii) A statement indicating that you burned no new types of fuel in an individual boiler or process heater subject to an emission limit. Or, if you did burn a new type of fuel and are subject to a HCl emission limit, you must submit the calculation of chlorine input, using Equation 7 of § 63.7530, that demonstrates that your source is still within its maximum chlorine input level established during the previous performance testing (for sources that demonstrate compliance through performance testing) or you must submit the calculation of HCl emission rate using Equation 12 of § 63.7530 that demonstrates that your source is still meeting the emission limit for HCl emissions (for boilers or process heaters that demonstrate compliance through fuel analysis). If you burned a new type of fuel and are subject to a mercury emission limit, you must submit the calculation of mercury input, using Equation 8 of § 63.7530, that demonstrates that your source is still within its maximum mercury input level established during the previous performance testing (for sources that demonstrate compliance through performance testing), or you must submit the calculation of mercury emission rate using Equation 13 of § 63.7530 that demonstrates that your source is still meeting the emission limit for mercury emissions (for boilers or process heaters that demonstrate compliance through fuel analysis). If you burned a new type of fuel and are subject to a TSM emission limit, you must submit the calculation of TSM input, using Equation 9 of § 63.7530, that demonstrates that your source is still within its maximum TSM input level established during the previous performance testing (for sources that demonstrate compliance through performance testing), or you must submit the calculation of TSM emission rate, using Equation 14 of § 63.7530, that demonstrates that your source is still meeting the emission limit for TSM emissions (for boilers or process heaters that demonstrate compliance through fuel analysis).

(ix) If you wish to burn a new type of fuel in an individual boiler or process heater subject to an emission limit and you cannot demonstrate compliance with the maximum chlorine input operating limit using Equation 7 of § 63.7530 or the maximum mercury input operating limit using Equation 8 of § 63.7530, or the maximum TSM input operating limit using Equation 9 of § 63.7530 you must include in the compliance report a statement indicating the intent to conduct a new performance test within 60 days of starting to burn the new fuel.

(x) A summary of any monthly fuel analyses conducted to demonstrate compliance according to §§ 63.7521 and 63.7530 for individual boilers or process heaters subject to emission limits, and any fuel specification analyses conducted according to §§ 63.7521(f) and 63.7530(g).

(xi) If there are no deviations from any emission limits or operating limits in this subpart that apply to you, a statement that there were no deviations from the emission limits or operating limits during the reporting period.

(xii) If there were no deviations from the monitoring requirements including no periods during which the CMSs, including CEMS, COMS, and CPMS, were out of control as specified in § 63.8(c)(7), a statement that there were no deviations and no periods during which the CMS were out of control during the reporting period.

(xiii) If a malfunction occurred during the reporting period, the report must include the number, duration, and a brief description for each type of malfunction which occurred during the reporting period and which caused or may have caused any applicable emission limitation to be exceeded. The report must also include a description of actions taken by you during a malfunction of a boiler, process heater, or associated air pollution control device or CMS to minimize emissions in accordance with § 63.7500(a)(3), including actions taken to correct the malfunction.

(xiv) Include the date of the most recent tune-up for each unit subject to only the requirement to conduct an annual, biennial, or 5-year tune-up according to § 63.7540(a)(10), (11), or (12) respectively. Include the date of the most recent burner inspection if it was not done annually, biennially, or on a 5-year period and was delayed until the next scheduled or unscheduled unit shutdown.

(xv) If you plan to demonstrate compliance by emission averaging, certify the emission level achieved or the control technology employed is no less stringent than the level or control technology contained in the notification of compliance status in § 63.7545(e)(5)(i).

(xvi) For each reporting period, the compliance reports must include all of the calculated 30 day rolling average values based on the daily CEMS (CO and mercury) and CPMS (PM CPMS output, scrubber pH, scrubber liquid flow rate, scrubber pressure drop) data.

(xvii) Statement by a responsible official with that official's name, title, and signature, certifying the truth, accuracy, and completeness of the content of the report.

(d) For each deviation from an emission limit or operating limit in this subpart that occurs at an individual boiler or process heater where you are not using a CMS to comply with that emission limit or operating limit, the compliance report must additionally contain the information required in paragraphs (d)(1) through (3) of this section.

(1) A description of the deviation and which emission limit or operating limit from which you deviated.

(2) Information on the number, duration, and cause of deviations (including unknown cause), as applicable, and the corrective action taken.

(3) If the deviation occurred during an annual performance test, provide the date the annual performance test was completed.

(e) For each deviation from an emission limit, operating limit, and monitoring requirement in this subpart occurring at an individual boiler or process heater where you are using a CMS to comply with that emission limit or operating limit, the compliance report must additionally contain the information required in paragraphs (e)(1) through (9) of this section. This includes any deviations from your site-specific monitoring plan as required in § 63.7505(d).

(1) The date and time that each deviation started and stopped and description of the nature of the deviation (i.e., what you deviated from).

(2) The date and time that each CMS was inoperative, except for zero (low-level) and high-level checks.

(3) The date, time, and duration that each CMS was out of control, including the information in § 63.8(c)(8).

(4) The date and time that each deviation started and stopped.

(5) A summary of the total duration of the deviation during the reporting period and the total duration as a percent of the total source operating time during that reporting period.

(6) A characterization of the total duration of the deviations during the reporting period into those that are due to control equipment problems, process problems, other known causes, and other unknown causes.

(7) A summary of the total duration of CMS's downtime during the reporting period and the total duration of CMS downtime as a percent of the total source operating time during that reporting period.

(8) A brief description of the source for which there was a deviation.

(9) A description of any changes in CMSs, processes, or controls since the last reporting period for the source for which there was a deviation.

(f)-(g) [Reserved]

(h) You must submit the reports according to the procedures specified in paragraphs (h)(1) through (3) of this section.

(1) Within 60 days after the date of completing each performance test (defined in § 63.2) as required by this subpart you must submit the results of the performance tests, including any associated fuel analyses, required by this subpart and the compliance reports required in § 63.7550(b) to the EPA's WebFIRE database by using the Compliance and Emissions Data Reporting Interface (CEDRI) that is accessed through the EPA's Central Data Exchange (CDX) ( *www.epa.gov/cdx* ). Performance test data must be submitted in the file format generated through use of the EPA's Electronic Reporting Tool (ERT) (see *http://www.epa.gov/ttn/chief/ert/index.html* ). Only data collected using test methods on the ERT Web site are subject to this requirement for submitting reports electronically to WebFIRE. Owners or operators who claim that some of the information being submitted for performance tests is confidential business information (CBI) must submit a complete ERT file including information claimed to be CBI on a compact disk or other commonly used electronic storage media (including, but not limited to, flash drives) to the EPA. The electronic media must be clearly marked as CBI and mailed to U.S. EPA/OAPQS/CORE CBI Office, Attention: WebFIRE Administrator, MD C404-02, 4930 Old Page Rd., Durham, NC 27703. The same ERT file with the CBI omitted must be submitted to the EPA via CDX as described earlier in this paragraph. At the discretion of the Administrator, you must also submit these reports, including the confidential business information, to the Administrator in the format specified by the Administrator. For any performance test conducted using test methods that are not listed on the ERT Web site, the owner or operator shall submit the results of the performance test in paper submissions to the Administrator.

(2) Within 60 days after the date of completing each CEMS performance evaluation test (defined in 63.2) you must submit the relative accuracy test audit (RATA) data to the EPA's Central Data Exchange by using CEDRI as mentioned in paragraph (h)(1) of this section. Only RATA pollutants that can be documented with the ERT (as listed on the ERT Web site) are subject to this requirement. For any performance evaluations with no corresponding RATA pollutants listed on the ERT Web site, the owner or operator shall submit the results of the performance evaluation in paper submissions to the Administrator.

(3) You must submit all reports required by Table 9 of this subpart electronically using CEDRI that is accessed through the EPA's Central Data Exchange (CDX) ( *www.epa.gov/cdx* ). However, if the reporting form specific to this subpart is not available in CEDRI at the time that the report is due the report you must submit the report to the Administrator at the appropriate address listed in § 63.13. At the discretion of the Administrator, you must also submit these reports, to the Administrator in the format specified by the Administrator.

[78 FR 7183, Jan. 31, 2013]

**§ 63.7555 What records must I keep?**

(a) You must keep records according to paragraphs (a)(1) and (2) of this section.

(1) A copy of each notification and report that you submitted to comply with this subpart, including all documentation supporting any Initial Notification or Notification of Compliance Status or semiannual compliance report that you submitted, according to the requirements in § 63.10(b)(2)(xiv).

(2) Records of performance tests, fuel analyses, or other compliance demonstrations and performance evaluations as required in § 63.10(b)(2)(viii).

(b) For each CEMS, COMS, and continuous monitoring system you must keep records according to paragraphs (b)(1) through (5) of this section.

(1) Records described in § 63.10(b)(2)(vii) through (xi).

(2) Monitoring data for continuous opacity monitoring system during a performance evaluation as required in § 63.6(h)(7)(i) and (ii).

(3) Previous ( *i.e.,* superseded) versions of the performance evaluation plan as required in § 63.8(d)(3).

(4) Request for alternatives to relative accuracy test for CEMS as required in § 63.8(f)(6)(i).

(5) Records of the date and time that each deviation started and stopped.

(c) You must keep the records required in Table 8 to this subpart including records of all monitoring data and calculated averages for applicable operating limits, such as opacity, pressure drop, pH, and operating load, to show continuous compliance with each emission limit and operating limit that applies to you.

(d) For each boiler or process heater subject to an emission limit in Tables 1, 2, or 11 through 13 to this subpart, you must also keep the applicable records in paragraphs (d)(1) through (11) of this section.

(1) You must keep records of monthly fuel use by each boiler or process heater, including the type(s) of fuel and amount(s) used.

(2) If you combust non-hazardous secondary materials that have been determined not to be solid waste pursuant to § 241.3(b)(1) and (2) of this chapter, you must keep a record that documents how the secondary material meets each of the legitimacy criteria under § 241.3(d)(1) of this chapter. If you combust a fuel that has been processed from a discarded non-hazardous secondary material pursuant to § 241.3(b)(4) of this chapter, you must keep records as to how the operations that produced the fuel satisfy the definition of processing in § 241.2 of this chapter. If the fuel received a non-waste determination pursuant to the petition process submitted under § 241.3(c) of this chapter, you must keep a record that documents how the fuel satisfies the requirements of the petition process. For operating units that combust non-hazardous secondary materials as fuel per § 241.4 of this chapter, you must keep records documenting that the material is listed as a non-waste under § 241.4(a) of this chapter. Units exempt from the incinerator standards under section 129(g)(1) of the Clean Air Act because they are qualifying facilities burning a homogeneous waste stream do not need to maintain the records described in this paragraph (d)(2).

(3) For units in the limited use subcategory, you must keep a copy of the federally enforceable permit that limits the annual capacity factor to less than or equal to 10 percent and fuel use records for the days the boiler or process heater was operating.

(4) A copy of all calculations and supporting documentation of maximum chlorine fuel input, using Equation 7 of § 63.7530, that were done to demonstrate continuous compliance with the HCl emission limit, for sources that demonstrate compliance through performance testing. For sources that demonstrate compliance through fuel analysis, a copy of all calculations and supporting documentation of HCl emission rates, using Equation 12 of § 63.7530, that were done to demonstrate compliance with the HCl emission limit. Supporting documentation should include results of any fuel analyses and basis for the estimates of maximum chlorine fuel input or HCl emission rates. You can use the results from one fuel analysis for multiple boilers and process heaters provided they are all burning the same fuel type. However, you must calculate chlorine fuel input, or HCl emission rate, for each boiler and process heater.

(5) A copy of all calculations and supporting documentation of maximum mercury fuel input, using Equation 8 of § 63.7530, that were done to demonstrate continuous compliance with the mercury emission limit for sources that demonstrate compliance through performance testing. For sources that demonstrate compliance through fuel analysis, a copy of all calculations and supporting documentation of mercury emission rates, using Equation 13 of § 63.7530, that were done to demonstrate compliance with the mercury emission limit. Supporting documentation should include results of any fuel analyses and basis for the estimates of maximum mercury fuel input or mercury emission rates. You can use the results from one fuel analysis for multiple boilers and process heaters provided they are all burning the same fuel type. However, you must calculate mercury fuel input, or mercury emission rates, for each boiler and process heater.

(6) If, consistent with § 63.7515(b), you choose to stack test less frequently than annually, you must keep a record that documents that your emissions in the previous stack test(s) were less than 75 percent of the applicable emission limit (or, in specific instances noted in Tables 1 and 2 or 11 through 13 to this subpart, less than the applicable

emission limit), and document that there was no change in source operations including fuel composition and operation of air pollution control equipment that would cause emissions of the relevant pollutant to increase within the past year.

(7) Records of the occurrence and duration of each malfunction of the boiler or process heater, or of the associated air pollution control and monitoring equipment.

(8) Records of actions taken during periods of malfunction to minimize emissions in accordance with the general duty to minimize emissions in § 63.7500(a)(3), including corrective actions to restore the malfunctioning boiler or process heater, air pollution control, or monitoring equipment to its normal or usual manner of operation.

(9) A copy of all calculations and supporting documentation of maximum TSM fuel input, using Equation 9 of § 63.7530, that were done to demonstrate continuous compliance with the TSM emission limit for sources that demonstrate compliance through performance testing. For sources that demonstrate compliance through fuel analysis, a copy of all calculations and supporting documentation of TSM emission rates, using Equation 14 of § 63.7530, that were done to demonstrate compliance with the TSM emission limit. Supporting documentation should include results of any fuel analyses and basis for the estimates of maximum TSM fuel input or TSM emission rates. You can use the results from one fuel analysis for multiple boilers and process heaters provided they are all burning the same fuel type. However, you must calculate TSM fuel input, or TSM emission rates, for each boiler and process heater.

(10) You must maintain records of the calendar date, time, occurrence and duration of each startup and shutdown.

(11) You must maintain records of the type(s) and amount(s) of fuels used during each startup and shutdown.

(e) If you elect to average emissions consistent with § 63.7522, you must additionally keep a copy of the emission averaging implementation plan required in § 63.7522(g), all calculations required under § 63.7522, including monthly records of heat input or steam generation, as applicable, and monitoring records consistent with § 63.7541.

(f) If you elect to use efficiency credits from energy conservation measures to demonstrate compliance according to § 63.7533, you must keep a copy of the Implementation Plan required in § 63.7533(d) and copies of all data and calculations used to establish credits according to § 63.7533(b), (c), and (f).

(g) If you elected to demonstrate that the unit meets the specification for mercury for the unit designed to burn gas 1 subcategory, you must maintain monthly records (or at the frequency required by § 63.7540(c)) of the calculations and results of the fuel specification for mercury in Table 6.

(h) If you operate a unit in the unit designed to burn gas 1 subcategory that is subject to this subpart, and you use an alternative fuel other than natural gas, refinery gas, gaseous fuel subject to another subpart under this part, other gas 1 fuel, or gaseous fuel subject to another subpart of this part or part 60, 61, or 65, you must keep records of the total hours per calendar year that alternative fuel is burned and the total hours per calendar year that the unit operated during periods of gas curtailment or gas supply emergencies.

(i) You must maintain records of the calendar date, time, occurrence and duration of each startup and shutdown.

(j) You must maintain records of the type(s) and amount(s) of fuels used during each startup and shutdown.

[76 FR 15664, Mar. 21, 2011, as amended at 78 FR 7185, Jan. 31, 2013]

**§ 63.7560 In what form and how long must I keep my records?**

(a) Your records must be in a form suitable and readily available for expeditious review, according to § 63.10(b)(1).

(b) As specified in § 63.10(b)(1), you must keep each record for 5 years following the date of each occurrence, measurement, maintenance, corrective action, report, or record.

(c) You must keep each record on site, or they must be accessible from on site (for example, through a computer network), for at least 2 years after the date of each occurrence, measurement, maintenance, corrective action, report, or record, according to § 63.10(b)(1). You can keep the records off site for the remaining 3 years.

**Other Requirements and Information**

**§ 63.7565 What parts of the General Provisions apply to me?**

Table 10 to this subpart shows which parts of the General Provisions in §§ 63.1 through 63.15 apply to you.

**§ 63.7570 Who implements and enforces this subpart?**

(a) This subpart can be implemented and enforced by the EPA, or an Administrator such as your state, local, or tribal agency. If the EPA Administrator has delegated authority to your state, local, or tribal agency, then that agency (as well as the EPA) has the authority to implement and enforce this subpart. You should contact your EPA Regional Office to find out if this subpart is delegated to your state, local, or tribal agency.

(b) In delegating implementation and enforcement authority of this subpart to a state, local, or tribal agency under 40 CFR part 63, subpart E, the authorities listed in paragraphs (b)(1) through (5) of this section are retained by the EPA Administrator and are not transferred to the state, local, or tribal agency, however, the EPA retains oversight of this subpart and can take enforcement actions, as appropriate.

(1) Approval of alternatives to the non-opacity emission limits and work practice standards in § 63.7500(a) and (b) under § 63.6(g).

(2) Approval of alternative opacity emission limits in § 63.7500(a) under § 63.6(h)(9).

(3) Approval of major change to test methods in Table 5 to this subpart under § 63.7(e)(2)(ii) and (f) and as defined in § 63.90, and alternative analytical methods requested under § 63.7521(b)(2).

(4) Approval of major change to monitoring under § 63.8(f) and as defined in § 63.90, and approval of alternative operating parameters under § 63.7500(a)(2) and § 63.7522(g)(2).

(5) Approval of major change to recordkeeping and reporting under § 63.10(e) and as defined in § 63.90.

[76 FR 15664, Mar. 21, 2011 as amended at 78 FR 7186, Jan. 31, 2013]

**§ 63.7575 What definitions apply to this subpart?**

Terms used in this subpart are defined in the Clean Air Act, in § 63.2 (the General Provisions), and in this section as follows:

*10-day rolling average* means the arithmetic mean of the previous 240 hours of valid operating data. Valid data excludes hours during startup and shutdown, data collected during periods when the monitoring system is out of control as specified in your site-specific monitoring plan, while conducting repairs associated with periods when the monitoring system is out of control, or while conducting required monitoring system quality assurance or quality control activities, and periods when this unit is not operating. The 240 hours should be consecutive, but not necessarily continuous if operations were intermittent.

*30-day rolling average* means the arithmetic mean of the previous 720 hours of valid operating data. Valid data excludes hours during startup and shutdown, data collected during periods when the monitoring system is out of control as specified in your site-specific monitoring plan, while conducting repairs associated with periods when the monitoring system is out of control, or while conducting required monitoring system quality assurance or quality control activities, and periods when this unit is not operating. The 720 hours should be consecutive, but not necessarily continuous if operations were intermittent.

*Affirmative defense* means, in the context of an enforcement proceeding, a response or defense put forward by a defendant, regarding which the defendant has the burden of proof, and the merits of which are independently and objectively evaluated in a judicial or administrative proceeding.

*Annual capacity factor* means the ratio between the actual heat input to a boiler or process heater from the fuels burned during a calendar year and the potential heat input to the boiler or process heater had it been operated for 8,760 hours during a year at the maximum steady state design heat input capacity.

*Annual heat input* means the heat input for the 12 months preceding the compliance demonstration.

*Average annual heat input rate* means total heat input divided by the hours of operation for the 12 months preceding the compliance demonstration.

*Bag leak detection system* means a group of instruments that are capable of monitoring particulate matter loadings in the exhaust of a fabric filter ( *i.e.,* baghouse) in order to detect bag failures. A bag leak detection system includes, but is not limited to, an instrument that operates on electrodynamic, triboelectric, light scattering, light transmittance, or other principle to monitor relative particulate matter loadings.

*Benchmark* means the fuel heat input for a boiler or process heater for the one-year period before the date that an energy demand reduction occurs, unless it can be demonstrated that a different time period is more representative of historical operations.

*Biodiesel* means a mono-alkyl ester derived from biomass and conforming to ASTM D6751-11b, Standard Specification for Biodiesel Fuel Blend Stock (B100) for Middle Distillate Fuels (incorporated by reference, see § 63.14).

*Biomass or bio-based solid fuel* means any biomass-based solid fuel that is not a solid waste. This includes, but is not limited to, wood residue; wood products ( *e.g.,* trees, tree stumps, tree limbs, bark, lumber, sawdust, sander dust, chips, scraps, slabs, millings, and shavings); animal manure, including litter and other bedding materials; vegetative agricultural and silvicultural materials, such as logging residues (slash), nut and grain hulls and chaff ( *e.g.,* almond, walnut, peanut, rice, and wheat), bagasse, orchard prunings, corn stalks, coffee bean hulls and grounds. This definition of biomass is not intended to suggest that these materials are or are not solid waste.

*Blast furnace gas fuel-fired boiler or process heater* means an industrial/commercial/institutional boiler or process heater that receives 90 percent or more of its total annual gas volume from blast furnace gas.

*Boiler* means an enclosed device using controlled flame combustion and having the primary purpose of recovering thermal energy in the form of steam or hot water. Controlled flame combustion refers to a steady-state, or near steady-state, process wherein fuel and/or oxidizer feed rates are controlled. A device combusting solid waste, as defined in § 241.3 of this chapter, is not a boiler unless the device is exempt from the definition of a solid waste incineration unit as provided in section 129(g)(1) of the Clean Air Act. Waste heat boilers are excluded from this definition.

*Boiler system* means the boiler and associated components, such as, the feed water system, the combustion air system, the fuel system (including burners), blowdown system, combustion control systems, steam systems, and condensate return systems.

*Calendar year* means the period between January 1 and December 31, inclusive, for a given year.

*Coal* means all solid fuels classifiable as anthracite, bituminous, sub-bituminous, or lignite by ASTM D388 (incorporated by reference, see § 63.14), coal refuse, and petroleum coke. For the purposes of this subpart, this definition of “coal” includes synthetic fuels derived from coal, including but not limited to, solvent-refined coal, coal-oil mixtures, and coal-water mixtures. Coal derived gases are excluded from this definition.

*Coal refuse* means any by-product of coal mining or coal cleaning operations with an ash content greater than 50 percent (by weight) and a heating value less than 13,900 kilojoules per kilogram (6,000 Btu per pound) on a dry basis.

*Commercial/institutional boiler* means a boiler used in commercial establishments or institutional establishments such as medical centers, nursing homes, research centers, institutions of higher education, elementary and secondary schools, libraries, religious establishments, governmental buildings, hotels, restaurants, and laundries to provide electricity, steam, and/or hot water.

*Common stack* means the exhaust of emissions from two or more affected units through a single flue. Affected units with a common stack may each have separate air pollution control systems located before the common stack, or may have a single air pollution control system located after the exhausts come together in a single flue.

*Cost-effective energy conservation measure* means a measure that is implemented to improve the energy efficiency of the boiler or facility that has a payback (return of investment) period of 2 years or less.

*Daily block average* means the arithmetic mean of all valid emission concentrations or parameter levels recorded when a unit is operating measured over the 24-hour period from 12 a.m. (midnight) to 12 a.m. (midnight), except for periods of startup and shutdown or downtime.

*Deviation.* (1) *Deviation* means any instance in which an affected source subject to this subpart, or an owner or operator of such a source:

(i) Fails to meet any applicable requirement or obligation established by this subpart including, but not limited to, any emission limit, operating limit, or work practice standard; or

(ii) Fails to meet any term or condition that is adopted to implement an applicable requirement in this subpart and that is included in the operating permit for any affected source required to obtain such a permit.

(2) A deviation is not always a violation.

*Dioxins/furans* means tetra- through octa-chlorinated dibenzo-p-dioxins and dibenzofurans.

*Distillate oil* means fuel oils that contain 0.05 weight percent nitrogen or less and comply with the specifications for fuel oil numbers 1 and 2, as defined by the American Society of Testing and Materials in ASTM D396 (incorporated by reference, see § 63.14) or diesel fuel oil numbers 1 and 2, as defined by the American Society for Testing and Materials in ASTM D975 (incorporated by reference, see § 63.14), kerosene, and biodiesel as defined by the American Society of Testing and Materials in ASTM D6751-11b (incorporated by reference, see § 60.14).

*Dry scrubber* means an add-on air pollution control system that injects dry alkaline sorbent (dry injection) or sprays an alkaline sorbent (spray dryer) to react with and neutralize acid gas in the exhaust stream forming a dry powder material. Sorbent injection systems used as control devices in fluidized bed boilers and process heaters are included in this definition. A dry scrubber is a dry control system.

*Dutch oven* means a unit having a refractory-walled cell connected to a conventional boiler setting. Fuel materials are introduced through an opening in the roof of the dutch oven and burn in a pile on its floor. Fluidized bed boilers are not part of the dutch oven design category.

*Efficiency credit* means emission reductions above those required by this subpart. Efficiency credits generated may be used to comply with the emissions limits. Credits may come from pollution prevention projects that result in reduced fuel use by affected units. Boilers that are shut down cannot be used to generate credits unless the facility provides documentation linking the permanent shutdown to implementation of the energy conservation measures identified in the energy assessment.

*Electric utility steam generating unit (EGU)* means a fossil fuel-fired combustion unit of more than 25 megawatts electric (MWe) that serves a generator that produces electricity for sale. A fossil fuel-fired unit that cogenerates steam and electricity and supplies more than one-third of its potential electric output capacity and more than 25 MWe output to any utility power distribution system for sale is considered an electric utility steam generating unit. To be “capable of combusting” fossil fuels, an EGU would need to have these fuels allowed in their operating permits and have the appropriate fuel handling facilities on-site or otherwise available (e.g., coal handling equipment, including coal storage area, belts and conveyers, pulverizers, etc.; oil storage facilities). In addition, fossil fuel-fired EGU means any EGU

that fired fossil fuel for more than 10.0 percent of the average annual heat input in any 3 consecutive calendar years or for more than 15.0 percent of the annual heat input during any one calendar year after April 16, 2012.

*Electrostatic precipitator (ESP)* means an add-on air pollution control device used to capture particulate matter by charging the particles using an electrostatic field, collecting the particles using a grounded collecting surface, and transporting the particles into a hopper. An electrostatic precipitator is usually a dry control system.

*Energy assessment* means the following for the emission units covered by this subpart:

(1) The energy assessment for facilities with affected boilers and process heaters with a combined heat input capacity of less than 0.3 trillion Btu (TBtu) per year will be 8 on-site technical labor hours in length maximum, but may be longer at the discretion of the owner or operator of the affected source. The boiler system(s) and any on-site energy use system(s) accounting for at least 50 percent of the affected boiler(s) energy (e.g., steam, hot water, process heat, or electricity) production, as applicable, will be evaluated to identify energy savings opportunities, within the limit of performing an 8-hour on-site energy assessment.

(2) The energy assessment for facilities with affected boilers and process heaters with a combined heat input capacity of 0.3 to 1.0 TBtu/year will be 24 on-site technical labor hours in length maximum, but may be longer at the discretion of the owner or operator of the affected source. The boiler system(s) and any on-site energy use system(s) accounting for at least 33 percent of the energy (e.g., steam, hot water, process heat, or electricity) production, as applicable, will be evaluated to identify energy savings opportunities, within the limit of performing a 24-hour on-site energy assessment.

(3) The energy assessment for facilities with affected boilers and process heaters with a combined heat input capacity greater than 1.0 TBtu/year will be up to 24 on-site technical labor hours in length for the first TBtu/yr plus 8 on-site technical labor hours for every additional 1.0 TBtu/yr not to exceed 160 on-site technical hours, but may be longer at the discretion of the owner or operator of the affected source. The boiler system(s), process heater(s), and any on-site energy use system(s) accounting for at least 20 percent of the energy (e.g., steam, process heat, hot water, or electricity) production, as applicable, will be evaluated to identify energy savings opportunities.

(4) The on-site energy use systems serving as the basis for the percent of affected boiler(s) and process heater(s) energy production in paragraphs (1), (2), and (3) of this definition may be segmented by production area or energy use area as most logical and applicable to the specific facility being assessed (e.g., product X manufacturing area; product Y drying area; Building Z).

*Energy management practices* means the set of practices and procedures designed to manage energy use that are demonstrated by the facility's energy policies, a facility energy manager and other staffing responsibilities, energy performance measurement and tracking methods, an energy saving goal, action plans, operating procedures, internal reporting requirements, and periodic review intervals used at the facility.

*Energy management program* means a program that includes a set of practices and procedures designed to manage energy use that are demonstrated by the facility's energy policies, a facility energy manager and other staffing responsibilities, energy performance measurement and tracking methods, an energy saving goal, action plans, operating procedures, internal reporting requirements, and periodic review intervals used at the facility. Facilities may establish their program through energy management systems compatible with ISO 50001.

*Energy use system* includes the following systems located on-site that use energy (steam, hot water, or electricity) provided by the affected boiler or process heater: process heating; compressed air systems; machine drive (motors, pumps, fans); process cooling; facility heating, ventilation, and air-conditioning systems; hot water systems; building envelop; and lighting; or other systems that use steam, hot water, process heat, or electricity provided by the affected boiler or process heater. Energy use systems are only those systems using energy clearly produced by affected boilers and process heaters.

*Equivalent* means the following only as this term is used in Table 6 to this subpart:

(1) An equivalent sample collection procedure means a published voluntary consensus standard or practice (VCS) or EPA method that includes collection of a minimum of three composite fuel samples, with each composite consisting of a minimum of three increments collected at approximately equal intervals over the test period.

(2) An equivalent sample compositing procedure means a published VCS or EPA method to systematically mix and obtain a representative subsample (part) of the composite sample.

(3) An equivalent sample preparation procedure means a published VCS or EPA method that: Clearly states that the standard, practice or method is appropriate for the pollutant and the fuel matrix; or is cited as an appropriate sample preparation standard, practice or method for the pollutant in the chosen VCS or EPA determinative or analytical method.

(4) An equivalent procedure for determining heat content means a published VCS or EPA method to obtain gross calorific (or higher heating) value.

(5) An equivalent procedure for determining fuel moisture content means a published VCS or EPA method to obtain moisture content. If the sample analysis plan calls for determining metals (especially the mercury, selenium, or arsenic) using an aliquot of the dried sample, then the drying temperature must be modified to prevent vaporizing these metals. On the other hand, if metals analysis is done on an “as received” basis, a separate aliquot can be dried to determine moisture content and the metals concentration mathematically adjusted to a dry basis.

(6) An equivalent pollutant (mercury, HCl) determinative or analytical procedure means a published VCS or EPA method that clearly states that the standard, practice, or method is appropriate for the pollutant and the fuel matrix and has a published detection limit equal or lower than the methods listed in Table 6 to this subpart for the same purpose.

*Fabric filter* means an add-on air pollution control device used to capture particulate matter by filtering gas streams through filter media, also known as a baghouse. A fabric filter is a dry control system.

*Federally enforceable* means all limitations and conditions that are enforceable by the EPA Administrator, including, but not limited to, the requirements of 40 CFR parts 60, 61, 63, and 65, requirements within any applicable state implementation plan, and any permit requirements established under 40 CFR 52.21 or under 40 CFR 51.18 and 40 CFR 51.24.

*Fluidized bed boiler* means a boiler utilizing a fluidized bed combustion process that is not a pulverized coal boiler.

*Fluidized bed boiler with an integrated fluidized bed heat exchanger* means a boiler utilizing a fluidized bed combustion where the entire tube surface area is located outside of the furnace section at the exit of the cyclone section and exposed to the flue gas stream for conductive heat transfer. This design applies only to boilers in the unit designed to burn coal/solid fossil fuel subcategory that fire coal refuse.

*Fluidized bed combustion* means a process where a fuel is burned in a bed of granulated particles, which are maintained in a mobile suspension by the forward flow of air and combustion products.

*Fuel cell* means a boiler type in which the fuel is dropped onto suspended fixed grates and is fired in a pile. The refractory-lined fuel cell uses combustion air preheating and positioning of secondary and tertiary air injection ports to improve boiler efficiency. Fluidized bed, dutch oven, pile burner, hybrid suspension grate, and suspension burners are not part of the fuel cell subcategory.

*Fuel type* means each category of fuels that share a common name or classification. Examples include, but are not limited to, bituminous coal, sub-bituminous coal, lignite, anthracite, biomass, distillate oil, residual oil. Individual fuel types received from different suppliers are not considered new fuel types.

*Gaseous fuel* includes, but is not limited to, natural gas, process gas, landfill gas, coal derived gas, refinery gas, and biogas. Blast furnace gas and process gases that are regulated under another subpart of this part, or part 60, part 61, or part 65 of this chapter, are exempted from this definition.

*Heat input* means heat derived from combustion of fuel in a boiler or process heater and does not include the heat input from preheated combustion air, recirculated flue gases, returned condensate, or exhaust gases from other sources such as gas turbines, internal combustion engines, kilns, etc.

*Heavy liquid* includes residual oil and any other liquid fuel not classified as a light liquid.

*Hourly average* means the arithmetic average of at least four CMS data values representing the four 15-minute periods in an hour, or at least two 15-minute data values during an hour when CMS calibration, quality assurance, or maintenance activities are being performed.

*Hot water heater* means a closed vessel with a capacity of no more than 120 U.S. gallons in which water is heated by combustion of gaseous, liquid, or biomass/bio-based solid fuel and is withdrawn for use external to the vessel. Hot water boilers (i.e., not generating steam) combusting gaseous, liquid, or biomass fuel with a heat input capacity of less than 1.6 million Btu per hour are included in this definition. The 120 U.S. gallon capacity threshold to be considered a hot water heater is independent of the 1.6 MMBtu/hr heat input capacity threshold for hot water boilers. Hot water heater also means a tankless unit that provides on demand hot water.

*Hybrid suspension grate boiler* means a boiler designed with air distributors to spread the fuel material over the entire width and depth of the boiler combustion zone. The biomass fuel combusted in these units exceeds a moisture content of 40 percent on an as-fired annual heat input basis. The drying and much of the combustion of the fuel takes place in suspension, and the combustion is completed on the grate or floor of the boiler. Fluidized bed, dutch oven, and pile burner designs are not part of the hybrid suspension grate boiler design category.

*Industrial boiler* means a boiler used in manufacturing, processing, mining, and refining or any other industry to provide steam, hot water, and/or electricity.

*Light liquid* includes distillate oil, biodiesel, or vegetable oil.

*Limited-use boiler or process heater* means any boiler or process heater that burns any amount of solid, liquid, or gaseous fuels and has a federally enforceable average annual capacity factor of no more than 10 percent.

*Liquid fuel* includes, but is not limited to, light liquid, heavy liquid, any form of liquid fuel derived from petroleum, used oil, liquid biofuels, biodiesel, vegetable oil, and comparable fuels as defined under 40 CFR 261.38.

*Load fraction* means the actual heat input of a boiler or process heater divided by heat input during the performance test that established the minimum sorbent injection rate or minimum activated carbon injection rate, expressed as a fraction (e.g., for 50 percent load the load fraction is 0.5).

*Major source for oil and natural gas production facilities,* as used in this subpart, shall have the same meaning as in § 63.2, except that:

(1) Emissions from any oil or gas exploration or production well (with its associated equipment, as defined in this section), and emissions from any pipeline compressor station or pump station shall not be aggregated with emissions from other similar units to determine whether such emission points or stations are major sources, even when emission points are in a contiguous area or under common control;

(2) Emissions from processes, operations, or equipment that are not part of the same facility, as defined in this section, shall not be aggregated; and

(3) For facilities that are production field facilities, only HAP emissions from glycol dehydration units and storage vessels with the potential for flash emissions shall be aggregated for a major source determination. For facilities that are not production field facilities, HAP emissions from all HAP emission units shall be aggregated for a major source determination.

*Metal process furnaces* are a subcategory of process heaters, as defined in this subpart, which include natural gas-fired annealing furnaces, preheat furnaces, reheat furnaces, aging furnaces, heat treat furnaces, and homogenizing furnaces.

*Million Btu (MMBtu)* means one million British thermal units.

*Minimum activated carbon injection rate* means load fraction multiplied by the lowest hourly average activated carbon injection rate measured according to Table 7 to this subpart during the most recent performance test demonstrating compliance with the applicable emission limit.

*Minimum oxygen level* means the lowest hourly average oxygen level measured according to Table 7 to this subpart during the most recent performance test demonstrating compliance with the applicable emission limit.

*Minimum pressure drop* means the lowest hourly average pressure drop measured according to Table 7 to this subpart during the most recent performance test demonstrating compliance with the applicable emission limit.

*Minimum scrubber effluent pH* means the lowest hourly average sorbent liquid pH measured at the inlet to the wet scrubber according to Table 7 to this subpart during the most recent performance test demonstrating compliance with the applicable hydrogen chloride emission limit.

*Minimum scrubber liquid flow rate* means the lowest hourly average liquid flow rate (e.g., to the PM scrubber or to the acid gas scrubber) measured according to Table 7 to this subpart during the most recent performance stack test demonstrating compliance with the applicable emission limit.

*Minimum scrubber pressure drop* means the lowest hourly average scrubber pressure drop measured according to Table 7 to this subpart during the most recent performance test demonstrating compliance with the applicable emission limit.

*Minimum sorbent injection rate* means:

(1) The load fraction multiplied by the lowest hourly average sorbent injection rate for each sorbent measured according to Table 7 to this subpart during the most recent performance test demonstrating compliance with the applicable emission limits; or

(2) For fluidized bed combustion, the lowest average ratio of sorbent to sulfur measured during the most recent performance test.

*Minimum total secondary electric power* means the lowest hourly average total secondary electric power determined from the values of secondary voltage and secondary current to the electrostatic precipitator measured according to Table 7 to this subpart during the most recent performance test demonstrating compliance with the applicable emission limits.

*Natural gas* means:

(1) A naturally occurring mixture of hydrocarbon and nonhydrocarbon gases found in geologic formations beneath the earth's surface, of which the principal constituent is methane; or

(2) Liquefied petroleum gas, as defined in ASTM D1835 (incorporated by reference, see § 63.14); or

(3) A mixture of hydrocarbons that maintains a gaseous state at ISO conditions. Additionally, natural gas must either be composed of at least 70 percent methane by volume or have a gross calorific value between 35 and 41 megajoules (MJ) per dry standard cubic meter (950 and 1,100 Btu per dry standard cubic foot); or

(4) Propane or propane derived synthetic natural gas. Propane means a colorless gas derived from petroleum and natural gas, with the molecular structure $C_3H_8$ .

*Opacity* means the degree to which emissions reduce the transmission of light and obscure the view of an object in the background.

*Operating day* means a 24-hour period between 12 midnight and the following midnight during which any fuel is combusted at any time in the boiler or process heater unit. It is not necessary for fuel to be combusted for the entire 24-hour period.

*Other combustor* means a unit designed to burn solid fuel that is not classified as a dutch oven, fluidized bed, fuel cell, hybrid suspension grate boiler, pulverized coal boiler, stoker, sloped grate, or suspension boiler as defined in this subpart.

*Other gas 1 fuel* means a gaseous fuel that is not natural gas or refinery gas and does not exceed a maximum concentration of 40 micrograms/cubic meters of mercury.

*Oxygen analyzer system* means all equipment required to determine the oxygen content of a gas stream and used to monitor oxygen in the boiler or process heater flue gas, boiler or process heater, firebox, or other appropriate location. This definition includes oxygen trim systems. The source owner or operator must install, calibrate, maintain, and operate the oxygen analyzer system in accordance with the manufacturer's recommendations.

*Oxygen trim system* means a system of monitors that is used to maintain excess air at the desired level in a combustion device. A typical system consists of a flue gas oxygen and/or CO monitor that automatically provides a feedback signal to the combustion air controller.

*Particulate matter (PM)* means any finely divided solid or liquid material, other than uncombined water, as measured by the test methods specified under this subpart, or an approved alternative method.

*Period of gas curtailment or supply interruption* means a period of time during which the supply of gaseous fuel to an affected boiler or process heater is restricted or halted for reasons beyond the control of the facility. The act of entering into a contractual agreement with a supplier of natural gas established for curtailment purposes does not constitute a reason that is under the control of a facility for the purposes of this definition. An increase in the cost or unit price of natural gas due to normal market fluctuations not during periods of supplier delivery restriction does not constitute a period of natural gas curtailment or supply interruption. On-site gaseous fuel system emergencies or equipment failures qualify as periods of supply interruption when the emergency or failure is beyond the control of the facility.

*Pile burner* means a boiler design incorporating a design where the anticipated biomass fuel has a high relative moisture content. Grates serve to support the fuel, and underfire air flowing up through the grates provides oxygen for combustion, cools the grates, promotes turbulence in the fuel bed, and fires the fuel. The most common form of pile burning is the dutch oven.

*Process heater* means an enclosed device using controlled flame, and the unit's primary purpose is to transfer heat indirectly to a process material (liquid, gas, or solid) or to a heat transfer material (e.g., glycol or a mixture of glycol and water) for use in a process unit, instead of generating steam. Process heaters are devices in which the combustion gases do not come into direct contact with process materials. A device combusting solid waste, as defined in § 241.3 of this chapter, is not a process heater unless the device is exempt from the definition of a solid waste incineration unit as provided in section 129(g)(1) of the Clean Air Act. Process heaters do not include units used for comfort heat or space heat, food preparation for on-site consumption, or autoclaves. Waste heat process heaters are excluded from this definition.

*Pulverized coal boiler* means a boiler in which pulverized coal or other solid fossil fuel is introduced into an air stream that carries the coal to the combustion chamber of the boiler where it is fired in suspension.

*Qualified energy assessor* means:

(1) Someone who has demonstrated capabilities to evaluate energy savings opportunities for steam generation and major energy using systems, including, but not limited to:

(i) Boiler combustion management.

(ii) Boiler thermal energy recovery, including

(A) Conventional feed water economizer,

(B) Conventional combustion air preheater, and

(C) Condensing economizer.

(iii) Boiler blowdown thermal energy recovery.

(iv) Primary energy resource selection, including

(A) Fuel (primary energy source) switching, and

(B) Applied steam energy versus direct-fired energy versus electricity.

(v) Insulation issues.

(vi) Steam trap and steam leak management.

(vi) Condensate recovery.

(viii) Steam end-use management.

(2) Capabilities and knowledge includes, but is not limited to:

(i) Background, experience, and recognized abilities to perform the assessment activities, data analysis, and report preparation.

(ii) Familiarity with operating and maintenance practices for steam or process heating systems.

(iii) Additional potential steam system improvement opportunities including improving steam turbine operations and reducing steam demand.

(iv) Additional process heating system opportunities including effective utilization of waste heat and use of proper process heating methods.

(v) Boiler-steam turbine cogeneration systems.

(vi) Industry specific steam end-use systems.

*Refinery gas* means any gas that is generated at a petroleum refinery and is combusted. Refinery gas includes natural gas when the natural gas is combined and combusted in any proportion with a gas generated at a refinery. Refinery gas includes gases generated from other facilities when that gas is combined and combusted in any proportion with gas generated at a refinery.

*Regulated gas stream* means an offgas stream that is routed to a boiler or process heater for the purpose of achieving compliance with a standard under another subpart of this part or part 60, part 61, or part 65 of this chapter.

*Residential boiler* means a boiler used to provide heat and/or hot water and/or as part of a residential combined heat and power system. This definition includes boilers located at an institutional facility (e.g., university campus, military base, church grounds) or commercial/industrial facility (e.g., farm) used primarily to provide heat and/or hot water for:

(1) A dwelling containing four or fewer families; or

(2) A single unit residence dwelling that has since been converted or subdivided into condominiums or apartments.

*Residual oil* means crude oil, fuel oil that does not comply with the specifications under the definition of distillate oil, and all fuel oil numbers 4, 5, and 6, as defined by the American Society of Testing and Materials in ASTM D396-10 (incorporated by reference, *see* § 63.14(b)).

*Responsible official* means responsible official as defined in § 70.2.

*Secondary material* means the material as defined in § 241.2 of this chapter.

*Shutdown* means the cessation of operation of a boiler or process heater for any purpose. Shutdown begins either when none of the steam from the boiler is supplied for heating and/or producing electricity, or for any other purpose, or at the point of no fuel being fired in the boiler or process heater, whichever is earlier. Shutdown ends when there is no steam and no heat being supplied and no fuel being fired in the boiler or process heater.

*Sloped grate* means a unit where the solid fuel is fed to the top of the grate from where it slides downwards; while sliding the fuel first dries and then ignites and burns. The ash is deposited at the bottom of the grate. Fluidized bed, dutch oven, pile burner, hybrid suspension grate, suspension burners, and fuel cells are not considered to be a sloped grate design.

*Solid fossil fuel* includes, but is not limited to, coal, coke, petroleum coke, and tire derived fuel.

*Solid fuel* means any solid fossil fuel or biomass or bio-based solid fuel.

*Startup* means either the first-ever firing of fuel in a boiler or process heater for the purpose of supplying steam or heat for heating and/or producing electricity, or for any other purpose, or the firing of fuel in a boiler after a shutdown event for any purpose. Startup ends when any of the steam or heat from the boiler or process heater is supplied for heating, and/or producing electricity, or for any other purpose.

*Steam output* means:

(1) For a boiler that produces steam for process or heating only (no power generation), the energy content in terms of MMBtu of the boiler steam output,

(2) For a boiler that cogenerates process steam and electricity (also known as combined heat and power), the total energy output, which is the sum of the energy content of the steam exiting the turbine and sent to process in MMBtu and the energy of the electricity generated converted to MMBtu at a rate of 10,000 Btu per kilowatt-hour generated (10 MMBtu per megawatt-hour), and

(3) For a boiler that generates only electricity, the alternate output-based emission limits would be calculated using Equations 21 through 25 of this section, as appropriate:

(i) For emission limits for boilers in the unit designed to burn solid fuel subcategory use Equation 21 of this section:

$$EL_{OBE} = EL_T \times 12.7 \text{ MMBtu/Mwh} \quad \text{(Eq. 21)}$$

Where:

$EL_{OBE}$ = Emission limit in units of pounds per megawatt-hour.

$EL_T$ = Appropriate emission limit from Table 1 or 2 of this subpart in units of pounds per million Btu heat input.

(ii) For PM and CO emission limits for boilers in one of the subcategories of units designed to burn coal use Equation 22 of this section:

$$EL_{OBE} = EL_T \times 12.2 \text{ MMBtu/Mwh} \quad \text{(Eq. 22)}$$

Where:

$EL_{OBE}$ = Emission limit in units of pounds per megawatt-hour.

$EL_T$ = Appropriate emission limit from Table 1 or 2 of this subpart in units of pounds per million Btu heat input.

(iii) For PM and CO emission limits for boilers in one of the subcategories of units designed to burn biomass use Equation 23 of this section:

$$EL_{OBE} = EL_T \times 13.9 \text{ MMBtu/Mwh} \quad \text{(Eq. 23)}$$

Where:

$EL_{OBE}$ = Emission limit in units of pounds per megawatt-hour.

$EL_T$ = Appropriate emission limit from Table 1 or 2 of this subpart in units of pounds per million Btu heat input.

(iv) For emission limits for boilers in one of the subcategories of units designed to burn liquid fuels use Equation 24 of this section:

$$EL_{OBE} = EL_T \times 13.8 \text{ MMBtu/Mwh} \quad \text{(Eq. 24)}$$

Where:

$EL_{OBE}$ = Emission limit in units of pounds per megawatt-hour.

$EL_T$ = Appropriate emission limit from Table 1 or 2 of this subpart in units of pounds per million Btu heat input.

(v) For emission limits for boilers in the unit designed to burn gas 2 (other) subcategory, use Equation 25 of this section:

$$EL_{OBE} = EL_T \times 10.4 \text{ MMBtu/Mwh} \quad \text{(Eq. 25)}$$

Where:

$EL_{OBE}$ = Emission limit in units of pounds per megawatt-hour.

$EL_T$ = Appropriate emission limit from Table 1 or 2 of this subpart in units of pounds per million Btu heat input.

*Stoker* means a unit consisting of a mechanically operated fuel feeding mechanism, a stationary or moving grate to support the burning of fuel and admit under-grate air to the fuel, an overfire air system to complete combustion, and an ash discharge system. This definition of stoker includes air swept stokers. There are two general types of stokers: Underfeed and overfeed. Overfeed stokers include mass feed and spreader stokers. Fluidized bed, dutch oven, pile burner, hybrid suspension grate, suspension burners, and fuel cells are not considered to be a stoker design.

*Stoker/sloped grate/other unit designed to burn kiln dried biomass* means the unit is in the units designed to burn biomass/bio-based solid subcategory that is either a stoker, sloped grate, or other combustor design and is not in the stoker/sloped grate/other units designed to burn wet biomass subcategory.

*Stoker/sloped grate/other unit designed to burn wet biomass* means the unit is in the units designed to burn biomass/bio-based solid subcategory that is either a stoker, sloped grate, or other combustor design and any of the biomass/bio-based solid fuel combusted in the unit exceeds 20 percent moisture on an annual heat input basis.

*Suspension burner* means a unit designed to fire dry biomass/biobased solid particles in suspension that are conveyed in an airstream to the furnace like pulverized coal. The combustion of the fuel material is completed on a grate or floor below. The biomass/biobased fuel combusted in the unit shall not exceed 20 percent moisture on an annual heat input basis. Fluidized bed, dutch oven, pile burner, and hybrid suspension grate units are not part of the suspension burner subcategory.

*Temporary boiler* means any gaseous or liquid fuel boiler that is designed to, and is capable of, being carried or moved from one location to another by means of, for example, wheels, skids, carrying handles, dollies, trailers, or platforms. A boiler is not a temporary boiler if any one of the following conditions exists:

(1) The equipment is attached to a foundation.

(2) The boiler or a replacement remains at a location within the facility and performs the same or similar function for more than 12 consecutive months, unless the regulatory agency approves an extension. An extension may be granted by the regulating agency upon petition by the owner or operator of a unit specifying the basis for such a request. Any temporary boiler that replaces a temporary boiler at a location and performs the same or similar function will be included in calculating the consecutive time period.

(3) The equipment is located at a seasonal facility and operates during the full annual operating period of the seasonal facility, remains at the facility for at least 2 years, and operates at that facility for at least 3 months each year.

(4) The equipment is moved from one location to another within the facility but continues to perform the same or similar function and serve the same electricity, steam, and/or hot water system in an attempt to circumvent the residence time requirements of this definition.

*Total selected metals (TSM)* means the sum of the following metallic hazardous air pollutants: arsenic, beryllium, cadmium, chromium, lead, manganese, nickel and selenium.

*Traditional fuel* means the fuel as defined in § 241.2 of this chapter.

*Tune-up* means adjustments made to a boiler or process heater in accordance with the procedures outlined in § 63.7540(a)(10).

*Ultra low sulfur liquid fuel* means a distillate oil that has less than or equal to 15 ppm sulfur.

*Unit designed to burn biomass/bio-based solid subcategory* includes any boiler or process heater that burns at least 10 percent biomass or bio-based solids on an annual heat input basis in combination with solid fossil fuels, liquid fuels, or gaseous fuels.

*Unit designed to burn coal/solid fossil fuel subcategory* includes any boiler or process heater that burns any coal or other solid fossil fuel alone or at least 10 percent coal or other solid fossil fuel on an annual heat input basis in combination with liquid fuels, gaseous fuels, or less than 10 percent biomass and bio-based solids on an annual heat input basis.

*Unit designed to burn gas 1 subcategory* includes any boiler or process heater that burns only natural gas, refinery gas, and/or other gas 1 fuels. Gaseous fuel boilers and process heaters that burn liquid fuel for periodic testing of liquid fuel, maintenance, or operator training, not to exceed a combined total of 48 hours during any calendar year, are included in this definition. Gaseous fuel boilers and process heaters that burn liquid fuel during periods of gas curtailment or gas supply interruptions of any duration are also included in this definition.

*Unit designed to burn gas 2 (other) subcategory* includes any boiler or process heater that is not in the unit designed to burn gas 1 subcategory and burns any gaseous fuels either alone or in combination with less than 10 percent coal/solid fossil fuel, and less than 10 percent biomass/bio-based solid fuel on an annual heat input basis, and no liquid fuels. Gaseous fuel boilers and process heaters that are not in the unit designed to burn gas 1 subcategory and that burn liquid fuel for periodic testing of liquid fuel, maintenance, or operator training, not to exceed a combined total of 48 hours during any calendar year, are included in this definition. Gaseous fuel boilers and process heaters that are not in the unit designed to burn gas 1 subcategory and that burn liquid fuel during periods of gas curtailment or gas supply interruption of any duration are also included in this definition.

*Unit designed to burn heavy liquid subcategory* means a unit in the unit designed to burn liquid subcategory where at least 10 percent of the heat input from liquid fuels on an annual heat input basis comes from heavy liquids.

*Unit designed to burn light liquid subcategory* means a unit in the unit designed to burn liquid subcategory that is not part of the unit designed to burn heavy liquid subcategory.

*Unit designed to burn liquid subcategory* includes any boiler or process heater that burns any liquid fuel, but less than 10 percent coal/solid fossil fuel and less than 10 percent biomass/bio-based solid fuel on an annual heat input basis, either alone or in combination with gaseous fuels. Units in the unit design to burn gas 1 or unit designed to burn gas 2 (other) subcategories that burn liquid fuel for periodic testing of liquid fuel, maintenance, or operator training, not to exceed a combined total of 48 hours during any calendar year are not included in this definition. Units in the unit design to burn gas 1 or unit designed to burn gas 2 (other) subcategories during periods of gas curtailment or gas supply interruption of any duration are also not included in this definition.

*Unit designed to burn liquid fuel that is a non-continental unit* means an industrial, commercial, or institutional boiler or process heater meeting the definition of the unit designed to burn liquid subcategory located in the State of Hawaii, the Virgin Islands, Guam, American Samoa, the Commonwealth of Puerto Rico, or the Northern Mariana Islands.

*Unit designed to burn solid fuel subcategory* means any boiler or process heater that burns only solid fuels or at least 10 percent solid fuel on an annual heat input basis in combination with liquid fuels or gaseous fuels.

*Vegetable oil* means oils extracted from vegetation.

*Voluntary Consensus Standards or VCS* mean technical standards ( *e.g.,* materials specifications, test methods, sampling procedures, business practices) developed or adopted by one or more voluntary consensus bodies. EPA/Office of Air Quality Planning and Standards, by precedent, has only used VCS that are written in English. Examples of VCS bodies are: American Society of Testing and Materials (ASTM 100 Barr Harbor Drive, P.O. Box CB700, West Conshohocken, Pennsylvania 19428-B2959, (800) 262-1373, *http://www.astm.org* ), American Society of Mechanical Engineers (ASME ASME, Three Park Avenue, New York, NY 10016-5990, (800) 843-2763, *http://www.asme.org* ), International Standards Organization (ISO 1, ch. de la Voie-Creuse, Case postale 56, CH-1211 Geneva 20, Switzerland, +41 22 749 01 11, *http://www.iso.org/iso/home.htm* ), Standards Australia (AS Level 10, The Exchange Centre, 20 Bridge Street, Sydney, GPO Box 476, Sydney NSW 2001, + 61 2 9237 6171 *http://www.stadards.org.au* ), British Standards Institution (BSI, 389 Chiswick High Road, London, W4 4AL, United Kingdom, +44 (0)20 8996 9001, *http://www.bsigroup.com* ), Canadian Standards Association (CSA 5060 Spectrum Way, Suite 100, Mississauga, Ontario L4W 5N6, Canada, 800-463-6727, *http://www.csa.ca* ), European Committee for Standardization (CEN CENELEC Management Centre Avenue Marnix 17 B-1000 Brussels, Belgium +32 2 550 08 11, *http://www.cen.eu/cen* ), and German Engineering Standards (VDI VDI Guidelines Department, P.O. Box 10 11 39 40002, Duesseldorf, Germany, +49 211 6214-230, *http://www.vdi.eu* ). The types of standards that are not considered VCS are standards developed by: The United States, *e.g.,* California (CARB) and Texas (TCEQ); industry groups, such as American Petroleum Institute (API), Gas Processors Association (GPA), and Gas Research Institute (GRI); and other branches of the U.S. government, *e.g.,* Department of Defense (DOD) and Department of Transportation (DOT). This does not preclude EPA from using standards developed by groups that are not VCS bodies within their rule. When this occurs, EPA has done searches and reviews for VCS equivalent to these non-EPA methods.

*Waste heat boiler* means a device that recovers normally unused energy (i.e., hot exhaust gas) and converts it to usable heat. Waste heat boilers are also referred to as heat recovery steam generators. Waste heat boilers are heat exchangers generating steam from incoming hot exhaust gas from an industrial (e.g., thermal oxidizer, kiln, furnace) or power (e.g., combustion turbine, engine) equipment. Duct burners are sometimes used to increase the temperature of the incoming hot exhaust gas.

*Waste heat process heater* means an enclosed device that recovers normally unused energy (i.e., hot exhaust gas) and converts it to usable heat. Waste heat process heaters are also referred to as recuperative process heaters. This definition includes both fired and unfired waste heat process heaters.

*Wet scrubber* means any add-on air pollution control device that mixes an aqueous stream or slurry with the exhaust gases from a boiler or process heater to control emissions of particulate matter or to absorb and neutralize acid gases, such as hydrogen chloride. A wet scrubber creates an aqueous stream or slurry as a byproduct of the emissions control process.

*Work practice standard* means any design, equipment, work practice, or operational standard, or combination thereof, that is promulgated pursuant to section 112(h) of the Clean Air Act.

[78 FR 15664, Mar. 21, 2011, as amended at 78 FR 7163, Jan. 31, 2013]

**Table 1 to Subpart DDDDD of Part 63—Emission Limits for New or Reconstructed Boilers and Process Heaters**

As stated in § 63.7500, you must comply with the following applicable emission limits:

[Units with heat input capacity of 10 million Btu per hour or greater]

| If your boiler or process heater is in this subcategory . . . | For the following pollutants . . . | The emissions must not exceed the following emission limits, except during startup and shutdown . . . | Or the emissions must not exceed the following alternative output-based limits, except during startup and shutdown . . . | Using this specified sampling volume or test run duration . . . |
|---|---|---|---|---|
| 1. Units in all subcategories designed to burn solid fuel. | a. HCl | 2.2E-02 lb per MMBtu of heat input | 2.5E-02 lb per MMBtu of steam output or 0.28 lb per MWh | For M26A, collect a minimum of 1 dscm per run; for M26 collect a minimum of 120 liters per run. |
| | b. Mercury | 8.0E-07 [a]lb per MMBtu of heat input | 8.7E-07 [a]lb per MMBtu of steam output or 1.1E-05 [a]lb per MWh | For M29, collect a minimum of 4 dscm per run; for M30A or M30B, collect a minimum sample as specified in the method; for ASTM D6784 [b]collect a minimum of 4 dscm. |
| 2. Units designed to burn coal/solid fossil fuel | a. Filterable PM (or TSM) | 1.1E-03 lb per MMBtu of heat input; or (2.3E-05 lb per MMBtu of heat input) | 1.1E-03 lb per MMBtu of steam output or 1.4E-02 lb per MWh; or (2.7E-05 lb per MMBtu of steam output or 2.9E-04 lb per MWh) | Collect a minimum of 3 dscm per run. |
| 3. Pulverized coal boilers designed to burn coal/solid fossil fuel | a. Carbon monoxide (CO) (or CEMS) | 130 ppm by volume on a dry basis corrected to 3 percent oxygen, 3-run average; or (320 ppm by volume on a dry basis corrected to 3 percent oxygen, 30-day rolling average) | 0.11 lb per MMBtu of steam output or 1.4 lb per MWh; 3-run average | 1 hr minimum sampling time. |
| 4. Stokers designed to burn coal/solid fossil fuel | a. CO (or CEMS) | 130 ppm by volume on a dry basis corrected to 3 percent oxygen, 3-run average; or (340 ppm by volume on a dry basis corrected to 3 percent oxygen, 30-day rolling average) | 0.12 lb per MMBtu of steam output or 1.4 lb per MWh; 3-run average | 1 hr minimum sampling time. |
| 5. Fluidized bed units designed to burn coal/solid fossil fuel | a. CO (or CEMS) | 130 ppm by volume on a dry basis corrected to 3 percent oxygen, 3-run average; or (230 ppm by volume on a dry basis corrected to 3 percent oxygen, 30-day rolling average) | 0.11 lb per MMBtu of steam output or 1.4 lb per MWh; 3-run average | 1 hr minimum sampling time. |

| If your boiler or process heater is in this subcategory . . . | For the following pollutants . . . | The emissions must not exceed the following emission limits, except during startup and shutdown . . . | Or the emissions must not exceed the following alternative output-based limits, except during startup and shutdown . . . | Using this specified sampling volume or test run duration . . . |
|---|---|---|---|---|
| 6. Fluidized bed units with an integrated heat exchanger designed to burn coal/solid fossil fuel | a. CO (or CEMS) | 140 ppm by volume on a dry basis corrected to 3 percent oxygen, 3-run average; or (150 ppm by volume on a dry basis corrected to 3 percent oxygen, 30-day rolling average) | 1.2E-01 lb per MMBtu of steam output or 1.5 lb per MWh; 3-run average | 1 hr minimum sampling time. |
| 7. Stokers/sloped grate/others designed to burn wet biomass fuel | a. CO (or CEMS) | 620 ppm by volume on a dry basis corrected to 3 percent oxygen, 3-run average; or (390 ppm by volume on a dry basis corrected to 3 percent oxygen, 30-day rolling average) | 5.8E-01 lb per MMBtu of steam output or 6.8 lb per MWh; 3-run average | 1 hr minimum sampling time. |
| | b. Filterable PM (or TSM) | 3.0E-02 lb per MMBtu of heat input; or (2.6E-05 lb per MMBtu of heat input) | 3.5E-02 lb per MMBtu of steam output or 4.2E-01 lb per MWh; or (2.7E-05 lb per MMBtu of steam output or 3.7E-04 lb per MWh) | Collect a minimum of 2 dscm per run. |
| 8. Stokers/sloped grate/others designed to burn kiln-dried biomass fuel | a. CO | 460 ppm by volume on a dry basis corrected to 3 percent oxygen | 4.2E-01 lb per MMBtu of steam output or 5.1 lb per MWh | 1 hr minimum sampling time. |
| | b. Filterable PM (or TSM) | 3.0E-02 lb per MMBtu of heat input; or (4.0E-03 lb per MMBtu of heat input) | 3.5E-02 lb per MMBtu of steam output or 4.2E-01 lb per MWh; or (4.2E-03 lb per MMBtu of steam output or 5.6E-02 lb per MWh) | Collect a minimum of 2 dscm per run. |
| 9. Fluidized bed units designed to burn biomass/bio-based solids | a. CO (or CEMS) | 230 ppm by volume on a dry basis corrected to 3 percent oxygen, 3-run average; or (310 ppm by volume on a dry basis corrected to 3 percent oxygen, 30-day rolling average) | 2.2E-01 lb per MMBtu of steam output or 2.6 lb per MWh; 3-run average | 1 hr minimum sampling time. |
| | b. Filterable PM (or TSM) | 9.8E-03 lb per MMBtu of heat input; or (8.3E-05 [a]lb per MMBtu of heat input) | 1.2E-02 lb per MMBtu of steam output or 0.14 lb per MWh; or (1.1E-04 [a]lb per MMBtu of steam output or 1.2E-03 [a]lb per MWh) | Collect a minimum of 3 dscm per run. |

| If your boiler or process heater is in this subcategory . . . | For the following pollutants . . . | The emissions must not exceed the following emission limits, except during startup and shutdown . . . | Or the emissions must not exceed the following alternative output-based limits, except during startup and shutdown . . . | Using this specified sampling volume or test run duration . . . |
|---|---|---|---|---|
| 10. Suspension burners designed to burn biomass/bio-based solids | a. CO (or CEMS) | 2,400 ppm by volume on a dry basis corrected to 3 percent oxygen, 3-run average; or (2,000 ppm by volume on a dry basis corrected to 3 percent oxygen, 10-day rolling average) | 1.9 lb per MMBtu of steam output or 27 lb per MWh; 3-run average | 1 hr minimum sampling time. |
| | b. Filterable PM (or TSM) | 3.0E-02 lb per MMBtu of heat input; or (6.5E-03 lb per MMBtu of heat input) | 3.1E-02 lb per MMBtu of steam output or 4.2E-01 lb per MWh; or (6.6E-03 lb per MMBtu of steam output or 9.1E-02 lb per MWh) | Collect a minimum of 2 dscm per run. |
| 11. Dutch Ovens/Pile burners designed to burn biomass/bio-based solids | a. CO (or CEMS) | 330 ppm by volume on a dry basis corrected to 3 percent oxygen, 3-run average; or (520 ppm by volume on a dry basis corrected to 3 percent oxygen, 10-day rolling average) | 3.5E-01 lb per MMBtu of steam output or 3.6 lb per MWh; 3-run average | 1 hr minimum sampling time. |
| | b. Filterable PM (or TSM) | 3.2E-03 lb per MMBtu of heat input; or (3.9E-05 lb per MMBtu of heat input) | 4.3E-03 lb per MMBtu of steam output or 4.5E-02 lb per MWh; or (5.2E-05 lb per MMBtu of steam output or 5.5E-04 lb per MWh) | Collect a minimum of 3 dscm per run. |
| 12. Fuel cell units designed to burn biomass/bio-based solids | a. CO | 910 ppm by volume on a dry basis corrected to 3 percent oxygen | 1.1 lb per MMBtu of steam output or 1.0E+01 lb per MWh | 1 hr minimum sampling time. |
| | b. Filterable PM (or TSM) | 2.0E-02 lb per MMBtu of heat input; or (2.9E-05 [a]lb per MMBtu of heat input) | 3.0E-02 lb per MMBtu of steam output or 2.8E-01 lb per MWh; or (5.1E-05 lb per MMBtu of steam output or 4.1E-04 lb per MWh) | Collect a minimum of 2 dscm per run. |
| 13. Hybrid suspension grate boiler designed to burn biomass/bio-based solids | a. CO (or CEMS) | 1,100 ppm by volume on a dry basis corrected to 3 percent oxygen, 3-run average; or (900 ppm by volume on a dry basis corrected to 3 percent oxygen, 30-day rolling average) | 1.4 lb per MMBtu of steam output or 12 lb per MWh; 3-run average | 1 hr minimum sampling time. |

| If your boiler or process heater is in this subcategory . . . | For the following pollutants . . . | The emissions must not exceed the following emission limits, except during startup and shutdown . . . | Or the emissions must not exceed the following alternative output-based limits, except during startup and shutdown . . . | Using this specified sampling volume or test run duration . . . |
|---|---|---|---|---|
| | b. Filterable PM (or TSM) | 2.6E-02 lb per MMBtu of heat input; or (4.4E-04 lb per MMBtu of heat input) | 3.3E-02 lb per MMBtu of steam output or 3.7E-01 lb per MWh; or (5.5E-04 lb per MMBtu of steam output or 6.2E-03 lb per MWh) | Collect a minimum of 3 dscm per run. |
| 14. Units designed to burn liquid fuel | a. HCl | 4.4E-04 lb per MMBtu of heat input | 4.8E-04 lb per MMBtu of steam output or 6.1E-03 lb per MWh | For M26A: Collect a minimum of 2 dscm per run; for M26, collect a minimum of 240 liters per run. |
| | b. Mercury | 4.8E-07 [a]lb per MMBtu of heat input | 5.3E-07 [a]lb per MMBtu of steam output or 6.7E-06 [a]lb per MWh | For M29, collect a minimum of 4 dscm per run; for M30A or M30B, collect a minimum sample as specified in the method; for ASTM D6784 [b]collect a minimum of 4 dscm. |
| 15. Units designed to burn heavy liquid fuel | a. CO | 130 ppm by volume on a dry basis corrected to 3 percent oxygen, 3-run average | 0.13 lb per MMBtu of steam output or 1.4 lb per MWh; 3-run average | 1 hr minimum sampling time. |
| | b. Filterable PM (or TSM) | 1.3E-02 lb per MMBtu of heat input; or (7.5E-05 lb per MMBtu of heat input) | 1.5E-02 lb per MMBtu of steam output or 1.8E-01 lb per MWh; or (8.2E-05 lb per MMBtu of steam output or 1.1E-03 lb per MWh) | Collect a minimum of 3 dscm per run. |
| 16. Units designed to burn light liquid fuel | a. CO | 130 ppm by volume on a dry basis corrected to 3 percent oxygen | 0.13 lb per MMBtu of steam output or 1.4 lb per MWh | 1 hr minimum sampling time. |
| | b. Filterable PM (or TSM) | 1.1E-03 [a]lb per MMBtu of heat input; or (2.9E-05 lb per MMBtu of heat input) | 1.2E-03 [a]lb per MMBtu of steam output or 1.6E-02 [a]lb per MWh; or (3.2E-05 lb per MMBtu of steam output or 4.0E-04 lb per MWh) | Collect a minimum of 3 dscm per run. |
| 17. Units designed to burn liquid fuel that are non-continental units | a. CO | 130 ppm by volume on a dry basis corrected to 3 percent oxygen, 3-run average based on stack test | 0.13 lb per MMBtu of steam output or 1.4 lb per MWh; 3-run average | 1 hr minimum sampling time. |
| | b. Filterable PM (or TSM) | 2.3E-02 lb per MMBtu of heat input; or (8.6E-04 lb per MMBtu of heat input) | 2.5E-02 lb per MMBtu of steam output or 3.2E-01 lb per MWh; or (9.4E-04 lb per MMBtu of steam output or 1.2E-02 lb per MWh) | Collect a minimum of 4 dscm per run. |

| If your boiler or process heater is in this subcategory . . . | For the following pollutants . . . | The emissions must not exceed the following emission limits, except during startup and shutdown . . . | Or the emissions must not exceed the following alternative output-based limits, except during startup and shutdown . . . | Using this specified sampling volume or test run duration . . . |
|---|---|---|---|---|
| 18. Units designed to burn gas 2 (other) gases | a. CO | 130 ppm by volume on a dry basis corrected to 3 percent oxygen | 0.16 lb per MMBtu of steam output or 1.0 lb per MWh | 1 hr minimum sampling time. |
| | b. HCl | 1.7E-03 lb per MMBtu of heat input | 2.9E-03 lb per MMBtu of steam output or 1.8E-02 lb per MWh | For M26A, Collect a minimum of 2 dscm per run; for M26, collect a minimum of 240 liters per run. |
| | c. Mercury | 7.9E-06 lb per MMBtu of heat input | 1.4E-05 lb per MMBtu of steam output or 8.3E-05 lb per MWh | For M29, collect a minimum of 3 dscm per run; for M30A or M30B, collect a minimum sample as specified in the method; for ASTM D6784 [b]collect a minimum of 3 dscm. |
| | d. Filterable PM (or TSM) | 6.7E-03 lb per MMBtu of heat input; or (2.1E-04 lb per MMBtu of heat input) | 1.2E-02 lb per MMBtu of steam output or 7.0E-02 lb per MWh; or (3.5E-04 lb per MMBtu of steam output or 2.2E-03 lb per MWh) | Collect a minimum of 3 dscm per run. |

[a] If you are conducting stack tests to demonstrate compliance and your performance tests for this pollutant for at least 2 consecutive years show that your emissions are at or below this limit, you can skip testing according to § 63.7515 if all of the other provisions of § 63.7515 are met. For all other pollutants that do not contain a footnote “a”, your performance tests for this pollutant for at least 2 consecutive years must show that your emissions are at or below 75 percent of this limit in order to qualify for skip testing.

[b] Incorporated by reference, see § 63.14.

[c] If your affected source is a new or reconstructed affected source that commenced construction or reconstruction after June 4, 2010, and before January 31, 2013, you may comply with the emission limits in Tables 11, 12 or 13 to this subpart until January 31, 2016. On and after January 31, 2016, you must comply with the emission limits in Table 1 to this subpart.

[78 FR 7193, Jan. 31, 2013]

**Table 2 to Subpart DDDDD of Part 63—Emission Limits for Existing Boilers and Process Heaters**

As stated in § 63.7500, you must comply with the following applicable emission limits:

[Units with heat input capacity of 10 million Btu per hour or greater]

| If your boiler or process heater is in this subcategory . . . | For the following pollutants . . . | The emissions must not exceed the following emission limits, except during startup and shutdown . . . | The emissions must not exceed the following alternative output-based limits, except during startup and shutdown . . . | Using this specified sampling volume or test run duration . . . |
|---|---|---|---|---|
| 1. Units in all subcategories designed to burn solid fuel | a. HCl | 2.2E-02 lb per MMBtu of heat input | 2.5E-02 lb per MMBtu of steam output or 0.27 lb per MWh | For M26A, Collect a minimum of 1 dscm per run; for M26, collect a minimum of 120 liters per run. |
| | b. Mercury | 5.7E-06 lb per MMBtu of heat input | 6.4E-06 lb per MMBtu of steam output or 7.3E-05 lb per MWh | For M29, collect a minimum of 3 dscm per run; for M30A or M30B, collect a minimum sample as specified in the method; for ASTM D6784 [b]collect a minimum of 3 dscm. |
| 2. Units design to burn coal/solid fossil fuel | a. Filterable PM (or TSM) | 4.0E-02 lb per MMBtu of heat input; or (5.3E-05 lb per MMBtu of heat input) | 4.2E-02 lb per MMBtu of steam output or 4.9E-01 lb per MWh; or (5.6E-05 lb per MMBtu of steam output or 6.5E-04 lb per MWh) | Collect a minimum of 2 dscm per run. |
| 3. Pulverized coal boilers designed to burn coal/solid fossil fuel | a. CO (or CEMS) | 130 ppm by volume on a dry basis corrected to 3 percent oxygen, 3-run average; or (320 ppm by volume on a dry basis corrected to 3 percent oxygen, 30-day rolling average) | 0.11 lb per MMBtu of steam output or 1.4 lb per MWh; 3-run average | 1 hr minimum sampling time. |
| 4. Stokers designed to burn coal/solid fossil fuel | a. CO (or CEMS) | 160 ppm by volume on a dry basis corrected to 3 percent oxygen, 3-run average; or (340 ppm by volume on a dry basis corrected to 3 percent oxygen, 30-day rolling average) | 0.14 lb per MMBtu of steam output or 1.7 lb per MWh; 3-run average | 1 hr minimum sampling time. |
| 5. Fluidized bed units designed to burn coal/solid fossil fuel | a. CO (or CEMS) | 130 ppm by volume on a dry basis corrected to 3 percent oxygen, 3-run average; or (230 ppm by volume on a dry basis corrected to 3 percent oxygen, 30-day rolling average) | 0.12 lb per MMBtu of steam output or 1.4 lb per MWh; 3-run average | 1 hr minimum sampling time. |

| If your boiler or process heater is in this subcategory . . . | For the following pollutants . . . | The emissions must not exceed the following emission limits, except during startup and shutdown . . . | The emissions must not exceed the following alternative output-based limits, except during startup and shutdown . . . | Using this specified sampling volume or test run duration . . . |
|---|---|---|---|---|
| 6. Fluidized bed units with an integrated heat exchanger designed to burn coal/solid fossil fuel | a. CO (or CEMS) | 140 ppm by volume on a dry basis corrected to 3 percent oxygen, 3-run average; or (150 ppm by volume on a dry basis corrected to 3 percent oxygen, 30-day rolling average) | 1.3E-01 lb per MMBtu of steam output or 1.5 lb per MWh; 3-run average | 1 hr minimum sampling time. |
| 7. Stokers/sloped grate/others designed to burn wet biomass fuel | a. CO (or CEMS) | 1,500 ppm by volume on a dry basis corrected to 3 percent oxygen, 3-run average; or (720 ppm by volume on a dry basis corrected to 3 percent oxygen, 30-day rolling average) | 1.4 lb per MMBtu of steam output or 17 lb per MWh; 3-run average | 1 hr minimum sampling time. |
| | b. Filterable PM (or TSM) | 3.7E-02 lb per MMBtu of heat input; or (2.4E-04 lb per MMBtu of heat input) | 4.3E-02 lb per MMBtu of steam output or 5.2E-01 lb per MWh; or (2.8E-04 lb per MMBtu of steam output or 3.4E-04 lb per MWh) | Collect a minimum of 2 dscm per run. |
| 8. Stokers/sloped grate/others designed to burn kiln-dried biomass fuel | a. CO | 460 ppm by volume on a dry basis corrected to 3 percent oxygen | 4.2E-01 lb per MMBtu of steam output or 5.1 lb per MWh | 1 hr minimum sampling time. |
| | b. Filterable PM (or TSM) | 3.2E-01 lb per MMBtu of heat input; or (4.0E-03 lb per MMBtu of heat input) | 3.7E-01 lb per MMBtu of steam output or 4.5 lb per MWh; or (4.6E-03 lb per MMBtu of steam output or 5.6E-02 lb per MWh) | Collect a minimum of 1 dscm per run. |
| 9. Fluidized bed units designed to burn biomass/bio-based solid | a. CO (or CEMS) | 470 ppm by volume on a dry basis corrected to 3 percent oxygen, 3-run average; or (310 ppm by volume on a dry basis corrected to 3 percent oxygen, 30-day rolling average) | 4.6E-01 lb per MMBtu of steam output or 5.2 lb per MWh; 3-run average | 1 hr minimum sampling time. |
| | b. Filterable PM (or TSM) | 1.1E-01 lb per MMBtu of heat input; or (1.2E-03 lb per MMBtu of heat input) | 1.4E-01 lb per MMBtu of steam output or 1.6 lb per MWh; or (1.5E-03 lb per MMBtu of steam output or 1.7E-02 lb per MWh) | Collect a minimum of 1 dscm per run. |

| If your boiler or process heater is in this subcategory . . . | For the following pollutants . . . | The emissions must not exceed the following emission limits, except during startup and shutdown . . . | The emissions must not exceed the following alternative output-based limits, except during startup and shutdown . . . | Using this specified sampling volume or test run duration . . . |
|---|---|---|---|---|
| 10. Suspension burners designed to burn biomass/bio-based solid | a. CO (or CEMS) | 2,400 ppm by volume on a dry basis corrected to 3 percent oxygen, 3-run average; or (2,000 ppm by volume on a dry basis corrected to 3 percent oxygen, 10-day rolling average) | 1.9 lb per MMBtu of steam output or 27 lb per MWh; 3-run average | 1 hr minimum sampling time. |
| | b. Filterable PM (or TSM) | 5.1E-02 lb per MMBtu of heat input; or (6.5E-03 lb per MMBtu of heat input) | 5.2E-02 lb per MMBtu of steam output or 7.1E-01 lb per MWh; or (6.6E-03 lb per MMBtu of steam output or 9.1E-02 lb per MWh) | Collect a minimum of 2 dscm per run. |
| 11. Dutch Ovens/Pile burners designed to burn biomass/bio-based solid | a. CO (or CEMS) | 770 ppm by volume on a dry basis corrected to 3 percent oxygen, 3-run average; or (520 ppm by volume on a dry basis corrected to 3 percent oxygen, 10-day rolling average) | 8.4E-01 lb per MMBtu of steam output or 8.4 lb per MWh; 3-run average | 1 hr minimum sampling time. |
| | b. Filterable PM (or TSM) | 2.8E-01 lb per MMBtu of heat input; or (2.0E-03 lb per MMBtu of heat input) | 3.9E-01 lb per MMBtu of steam output or 3.9 lb per MWh; or (2.8E-03 lb per MMBtu of steam output or 2.8E-02 lb per MWh) | Collect a minimum of 1 dscm per run. |
| 12. Fuel cell units designed to burn biomass/bio-based solid | a. CO | 1,100 ppm by volume on a dry basis corrected to 3 percent oxygen | 2.4 lb per MMBtu of steam output or 12 lb per MWh | 1 hr minimum sampling time. |
| | b. Filterable PM (or TSM) | 2.0E-02 lb per MMBtu of heat input; or (5.8E-03 lb per MMBtu of heat input) | 5.5E-02 lb per MMBtu of steam output or 2.8E-01 lb per MWh; or (1.6E-02 lb per MMBtu of steam output or 8.1E-02 lb per MWh) | Collect a minimum of 2 dscm per run. |
| 13. Hybrid suspension grate units designed to burn biomass/bio-based solid | a. CO (or CEMS) | 2,800 ppm by volume on a dry basis corrected to 3 percent oxygen, 3-run average; or (900 ppm by volume on a dry basis corrected to 3 percent oxygen, 30-day rolling average) | 2.8 lb per MMBtu of steam output or 31 lb per MWh; 3-run average | 1 hr minimum sampling time. |

| If your boiler or process heater is in this subcategory . . . | For the following pollutants . . . | The emissions must not exceed the following emission limits, except during startup and shutdown . . . | The emissions must not exceed the following alternative output-based limits, except during startup and shutdown . . . | Using this specified sampling volume or test run duration . . . |
|---|---|---|---|---|
| | b. Filterable PM (or TSM) | 4.4E-01 lb per MMBtu of heat input; or (4.5E-04 lb per MMBtu of heat input) | 5.5E-01 lb per MMBtu of steam output or 6.2 lb per MWh; or (5.7E-04 lb per MMBtu of steam output or 6.3E-03 lb per MWh) | Collect a minimum of 1 dscm per run. |
| 14. Units designed to burn liquid fuel | a. HCl | 1.1E-03 lb per MMBtu of heat input | 1.4E-03 lb per MMBtu of steam output or 1.6E-02 lb per MWh | For M26A, collect a minimum of 2 dscm per run; for M26, collect a minimum of 240 liters per run. |
| | b. Mercury | 2.0E-06 lb per MMBtu of heat input | 2.5E-06 lb per MMBtu of steam output or 2.8E-05 lb per MWh | For M29, collect a minimum of 3 dscm per run; for M30A or M30B collect a minimum sample as specified in the method, for ASTM D6784 [b]collect a minimum of 2 dscm. |
| 15. Units designed to burn heavy liquid fuel | a. CO | 130 ppm by volume on a dry basis corrected to 3 percent oxygen, 3-run average | 0.13 lb per MMBtu of steam output or 1.4 lb per MWh; 3-run average | 1 hr minimum sampling time. |
| | b. Filterable PM (or TSM) | 6.2E-02 lb per MMBtu of heat input; or (2.0E-04 lb per MMBtu of heat input) | 7.5E-02 lb per MMBtu of steam output or 8.6E-01 lb per MWh; or (2.5E-04 lb per MMBtu of steam output or 2.8E-03 lb per MWh) | Collect a minimum of 1 dscm per run. |
| 16. Units designed to burn light liquid fuel | a. CO | 130 ppm by volume on a dry basis corrected to 3 percent oxygen | 0.13 lb per MMBtu of steam output or 1.4 lb per MWh | 1 hr minimum sampling time. |
| | b. Filterable PM (or TSM) | 7.9E-03 lb per MMBtu of heat input; or (6.2E-05 lb per MMBtu of heat input) | 9.6E-03 lb per MMBtu of steam output or 1.1E-01 lb per MWh; or (7.5E-05 lb per MMBtu of steam output or 8.6E-04 lb per MWh) | Collect a minimum of 3 dscm per run. |
| 17. Units designed to burn liquid fuel that are non-continental units | a. CO | 130 ppm by volume on a dry basis corrected to 3 percent oxygen, 3-run average based on stack test | 0.13 lb per MMBtu of steam output or 1.4 lb per MWh; 3-run average | 1 hr minimum sampling time. |
| | b. Filterable PM (or TSM) | 2.7E-01 lb per MMBtu of heat input; or (8.6E-04 lb per MMBtu of heat input) | 3.3E-01 lb per MMBtu of steam output or 3.8 lb per MWh; or (1.1E-03 lb per MMBtu of steam output or 1.2E-02 lb per MWh) | Collect a minimum of 2 dscm per run. |

| If your boiler or process heater is in this subcategory . . . | For the following pollutants . . . | The emissions must not exceed the following emission limits, except during startup and shutdown . . . | The emissions must not exceed the following alternative output-based limits, except during startup and shutdown . . . | Using this specified sampling volume or test run duration . . . |
|---|---|---|---|---|
| 18. Units designed to burn gas 2 (other) gases | a. CO | 130 ppm by volume on a dry basis corrected to 3 percent oxygen | 0.16 lb per MMBtu of steam output or 1.0 lb per MWh | 1 hr minimum sampling time. |
| | b. HCl | 1.7E-03 lb per MMBtu of heat input | 2.9E-03 lb per MMBtu of steam output or 1.8E-02 lb per MWh | For M26A, collect a minimum of 2 dscm per run; for M26, collect a minimum of 240 liters per run. |
| | c. Mercury | 7.9E-06 lb per MMBtu of heat input | 1.4E-05 lb per MMBtu of steam output or 8.3E-05 lb per MWh | For M29, collect a minimum of 3 dscm per run; for M30A or M30B, collect a minimum sample as specified in the method; for ASTM D6784 [b]collect a minimum of 2 dscm. |
| | d. Filterable PM (or TSM) | 6.7E-03 lb per MMBtu of heat input or (2.1E-04 lb per MMBtu of heat input) | 1.2E-02 lb per MMBtu of steam output or 7.0E-02 lb per MWh; or (3.5E-04 lb per MMBtu of steam output or 2.2E-03 lb per MWh) | Collect a minimum of 3 dscm per run. |

[a] If you are conducting stack tests to demonstrate compliance and your performance tests for this pollutant for at least 2 consecutive years show that your emissions are at or below this limit, you can skip testing according to § 63.7515 if all of the other provisions of § 63.7515 are met. For all other pollutants that do not contain a footnote a, your performance tests for this pollutant for at least 2 consecutive years must show that your emissions are at or below 75 percent of this limit in order to qualify for skip testing.

[b] Incorporated by reference, see § 63.14.

[78 FR 7195, Jan. 31, 2013]

**Table 3 to Subpart DDDDD of Part 63—Work Practice Standards**

As stated in § 63.7500, you must comply with the following applicable work practice standards:

| If your unit is . . . | You must meet the following . . . |
|---|---|
| 1. A new or existing boiler or process heater with a continuous oxygen trim system that maintains an optimum air to fuel ratio, or a heat input capacity of less than or equal to 5 million Btu per hour in any of the following subcategories: unit designed to burn gas 1; unit designed to burn gas 2 (other); or unit designed to burn light liquid, or a limited use boiler or process heater | Conduct a tune-up of the boiler or process heater every 5 years as specified in § 63.7540. |

| | |
|---|---|
| 2. A new or existing boiler or process heater without a continuous oxygen trim system and with heat input capacity of less than 10 million Btu per hour in the unit designed to burn heavy liquid or unit designed to burn solid fuel subcategories; or a new or existing boiler or process heater with heat input capacity of less than 10 million Btu per hour, but greater than 5 million Btu per hour, in any of the following subcategories: unit designed to burn gas 1; unit designed to burn gas 2 (other); or unit designed to burn light liquid | Conduct a tune-up of the boiler or process heater biennially as specified in § 63.7540. |
| 3. A new or existing boiler or process heater without a continuous oxygen trim system and with heat input capacity of 10 million Btu per hour or greater | Conduct a tune-up of the boiler or process heater annually as specified in § 63.7540. Units in either the Gas 1 or Metal Process Furnace subcategories will conduct this tune-up as a work practice for all regulated emissions under this subpart. Units in all other subcategories will conduct this tune-up as a work practice for dioxins/furans. |
| 4. An existing boiler or process heater located at a major source facility, not including limited use units | Must have a one-time energy assessment performed by a qualified energy assessor. An energy assessment completed on or after January 1, 2008, that meets or is amended to meet the energy assessment requirements in this table, satisfies the energy assessment requirement. A facility that operates under an energy management program compatible with ISO 50001 that includes the affected units also satisfies the energy assessment requirement. The energy assessment must include the following with extent of the evaluation for items a. to e. appropriate for the on-site technical hours listed in § 63.7575: |
| | a. A visual inspection of the boiler or process heater system. |
| | b. An evaluation of operating characteristics of the boiler or process heater systems, specifications of energy using systems, operating and maintenance procedures, and unusual operating constraints. |
| | c. An inventory of major energy use systems consuming energy from affected boilers and process heaters and which are under the control of the boiler/process heater owner/operator. |
| | d. A review of available architectural and engineering plans, facility operation and maintenance procedures and logs, and fuel usage. |
| | e. A review of the facility's energy management practices and provide recommendations for improvements consistent with the definition of energy management practices, if identified. |
| | f. A list of cost-effective energy conservation measures that are within the facility's control. |
| | g. A list of the energy savings potential of the energy conservation measures identified. |
| | h. A comprehensive report detailing the ways to improve efficiency, the cost of specific improvements, benefits, and the time frame for recouping those investments. |

| | |
|---|---|
| 5. An existing or new boiler or process heater subject to emission limits in Table 1 or 2 or 11 through 13 to this subpart during startup | You must operate all CMS during startup.<br>For startup of a boiler or process heater, you must use one or a combination of the following clean fuels: natural gas, synthetic natural gas, propane, distillate oil, syngas, ultra-low sulfur diesel, fuel oil-soaked rags, kerosene, hydrogen, paper, cardboard, refinery gas, and liquefied petroleum gas. |
| | If you start firing coal/solid fossil fuel, biomass/bio-based solids, heavy liquid fuel, or gas 2 (other) gases, you must vent emissions to the main stack(s) and engage all of the applicable control devices except limestone injection in fluidized bed combustion (FBC) boilers, dry scrubber, fabric filter, selective non-catalytic reduction (SNCR), and selective catalytic reduction (SCR). You must start your limestone injection in FBC boilers, dry scrubber, fabric filter, SNCR, and SCR systems as expeditiously as possible. Startup ends when steam or heat is supplied for any purpose. |
| | You must comply with all applicable emission limits at all times except for startup or shutdown periods conforming with this work practice. You must collect monitoring data during periods of startup, as specified in § 63.7535(b). You must keep records during periods of startup. You must provide reports concerning activities and periods of startup, as specified in § 63.7555. |
| 6. An existing or new boiler or process heater subject to emission limits in Tables 1 or 2 or 11 through 13 to this subpart during shutdown | You must operate all CMS during shutdown.<br>While firing coal/solid fossil fuel, biomass/bio-based solids, heavy liquid fuel, or gas 2 (other) gases during shutdown, you must vent emissions to the main stack(s) and operate all applicable control devices, except limestone injection in FBC boilers, dry scrubber, fabric filter, SNCR, and SCR. |
| | You must comply with all applicable emissions limits at all times except for startup or shutdown periods conforming with this work practice. You must collect monitoring data during periods of shutdown, as specified in § 63.7535(b). You must keep records during periods of shutdown. You must provide reports concerning activities and periods of shutdown, as specified in § 63.7555. |

[78 FR 7198, Jan. 31, 2013]

**Table 4 to Subpart DDDDD of Part 63—Operating Limits for Boilers and Process Heaters**

As stated in § 63.7500, you must comply with the applicable operating limits:

| When complying with a Table 1, 2, 11, 12, or 13 numerical emission limit using . . . | You must meet these operating limits . . . |
|---|---|
| 1. Wet PM scrubber control on a boiler not using a PM CPMS | Maintain the 30-day rolling average pressure drop and the 30-day rolling average liquid flow rate at or above the lowest one-hour average pressure drop and the lowest one-hour average liquid flow rate, respectively, measured during the most recent performance test demonstrating compliance with the PM emission limitation according to § 63.7530(b) and Table 7 to this subpart. |

| When complying with a Table 1, 2, 11, 12, or 13 numerical emission limit using . . . | You must meet these operating limits . . . |
|---|---|
| 2. Wet acid gas (HCl) scrubber control on a boiler not using a HCl CEMS | Maintain the 30-day rolling average effluent pH at or above the lowest one-hour average pH and the 30-day rolling average liquid flow rate at or above the lowest one-hour average liquid flow rate measured during the most recent performance test demonstrating compliance with the HCl emission limitation according to § 63.7530(b) and Table 7 to this subpart. |
| 3. Fabric filter control on units not using a PM CPMS | a. Maintain opacity to less than or equal to 10 percent opacity (daily block average); or |
| | b. Install and operate a bag leak detection system according to § 63.7525 and operate the fabric filter such that the bag leak detection system alert is not activated more than 5 percent of the operating time during each 6-month period. |
| 4. Electrostatic precipitator control on units not using a PM CPMS | a. This option is for boilers and process heaters that operate dry control systems (i.e., an ESP without a wet scrubber). Existing and new boilers and process heaters must maintain opacity to less than or equal to 10 percent opacity (daily block average); or |
| | b. This option is only for boilers and process heaters not subject to PM CPMS or continuous compliance with an opacity limit (i.e., COMS). Maintain the 30-day rolling average total secondary electric power input of the electrostatic precipitator at or above the operating limits established during the performance test according to § 63.7530(b) and Table 7 to this subpart. |
| 5. Dry scrubber or carbon injection control on a boiler not using a mercury CEMS | Maintain the minimum sorbent or carbon injection rate as defined in § 63.7575 of this subpart. |
| 6. Any other add-on air pollution control type on units not using a PM CPMS | This option is for boilers and process heaters that operate dry control systems. Existing and new boilers and process heaters must maintain opacity to less than or equal to 10 percent opacity (daily block average). |
| 7. Fuel analysis | Maintain the fuel type or fuel mixture such that the applicable emission rates calculated according to § 63.7530(c)(1), (2) and/or (3) is less than the applicable emission limits. |
| 8. Performance testing | For boilers and process heaters that demonstrate compliance with a performance test, maintain the operating load of each unit such that it does not exceed 110 percent of the highest hourly average operating load recorded during the most recent performance test. |
| 9. Oxygen analyzer system | For boilers and process heaters subject to a CO emission limit that demonstrate compliance with an $O_2$analyzer system as specified in § 63.7525(a), maintain the 30-day rolling average oxygen content at or above the lowest hourly average oxygen concentration measured during the most recent CO performance test, as specified in Table 8. This requirement does not apply to units that install an oxygen trim system since these units will set the trim system to the level specified in § 63.7525(a). |
| 10. $SO_2$CEMS | For boilers or process heaters subject to an HCl emission limit that demonstrate compliance with an $SO_2$CEMS, maintain the 30-day rolling average $SO_2$emission rate at or below the highest hourly average $SO_2$concentration measured during the most recent HCl performance test, as specified in Table 8. |

[78 FR 7199, Jan. 31, 2013]

**Table 5 to Subpart DDDDD of Part 63—Performance Testing Requirements**

As stated in § 63.7520, you must comply with the following requirements for performance testing for existing, new or reconstructed affected sources:

| To conduct a performance test for the following pollutant... | You must... | Using... |
|---|---|---|
| 1. Filterable PM | a. Select sampling ports location and the number of traverse points | Method 1 at 40 CFR part 60, appendix A-1 of this chapter. |
| | b. Determine velocity and volumetric flow-rate of the stack gas | Method 2, 2F, or 2G at 40 CFR part 60, appendix A-1 or A-2 to part 60 of this chapter. |
| | c. Determine oxygen or carbon dioxide concentration of the stack gas | Method 3A or 3B at 40 CFR part 60, appendix A-2 to part 60 of this chapter, or ANSI/ASME PTC 19.10-1981.[a] |
| | d. Measure the moisture content of the stack gas | Method 4 at 40 CFR part 60, appendix A-3 of this chapter. |
| | e. Measure the PM emission concentration | Method 5 or 17 (positive pressure fabric filters must use Method 5D) at 40 CFR part 60, appendix A-3 or A-6 of this chapter. |
| | f. Convert emissions concentration to lb per MMBtu emission rates | Method 19 F-factor methodology at 40 CFR part 60, appendix A-7 of this chapter. |
| 2. TSM | a. Select sampling ports location and the number of traverse points | Method 1 at 40 CFR part 60, appendix A-1 of this chapter. |
| | b. Determine velocity and volumetric flow-rate of the stack gas | Method 2, 2F, or 2G at 40 CFR part 60, appendix A-1 or A-2 of this chapter. |
| | c. Determine oxygen or carbon dioxide concentration of the stack gas | Method 3A or 3B at 40 CFR part 60, appendix A-1 of this chapter, or ANSI/ASME PTC 19.10-1981.[a] |
| | d. Measure the moisture content of the stack gas | Method 4 at 40 CFR part 60, appendix A-3 of this chapter. |
| | e. Measure the TSM emission concentration | Method 29 at 40 CFR part 60, appendix A-8 of this chapter |
| | f. Convert emissions concentration to lb per MMBtu emission rates | Method 19 F-factor methodology at 40 CFR part 60, appendix A-7 of this chapter. |
| 3. Hydrogen chloride | a. Select sampling ports location and the number of traverse points | Method 1 at 40 CFR part 60, appendix A-1 of this chapter. |
| | b. Determine velocity and volumetric flow-rate of the stack gas | Method 2, 2F, or 2G at 40 CFR part 60, appendix A-2 of this chapter. |
| | c. Determine oxygen or carbon dioxide concentration of the stack gas | Method 3A or 3B at 40 CFR part 60, appendix A-2 of this chapter, or ANSI/ASME PTC 19.10-1981.[a] |
| | d. Measure the moisture content of the stack gas | Method 4 at 40 CFR part 60, appendix A-3 of this chapter. |
| | e. Measure the hydrogen chloride emission concentration | Method 26 or 26A (M26 or M26A) at 40 CFR part 60, appendix A-8 of this chapter. |

| To conduct a performance test for the following pollutant... | You must... | Using... |
|---|---|---|
| | f. Convert emissions concentration to lb per MMBtu emission rates | Method 19 F-factor methodology at 40 CFR part 60, appendix A-7 of this chapter. |
| 4. Mercury | a. Select sampling ports location and the number of traverse points | Method 1 at 40 CFR part 60, appendix A-1 of this chapter. |
| | b. Determine velocity and volumetric flow-rate of the stack gas | Method 2, 2F, or 2G at 40 CFR part 60, appendix A-1 or A-2 of this chapter. |
| | c. Determine oxygen or carbon dioxide concentration of the stack gas | Method 3A or 3B at 40 CFR part 60, appendix A-1 of this chapter, or ANSI/ASME PTC 19.10-1981.[a] |
| | d. Measure the moisture content of the stack gas | Method 4 at 40 CFR part 60, appendix A-3 of this chapter. |
| | e. Measure the mercury emission concentration | Method 29, 30A, or 30B (M29, M30A, or M30B) at 40 CFR part 60, appendix A-8 of this chapter or Method 101A at 40 CFR part 61, appendix B of this chapter, or ASTM Method D6784.[a] |
| | f. Convert emissions concentration to lb per MMBtu emission rates | Method 19 F-factor methodology at 40 CFR part 60, appendix A-7 of this chapter. |
| 5. CO | a. Select the sampling ports location and the number of traverse points | Method 1 at 40 CFR part 60, appendix A-1 of this chapter. |
| | b. Determine oxygen concentration of the stack gas | Method 3A or 3B at 40 CFR part 60, appendix A-3 of this chapter, or ASTM D6522-00 (Reapproved 2005), or ANSI/ASME PTC 19.10-1981.[a] |
| | c. Measure the moisture content of the stack gas | Method 4 at 40 CFR part 60, appendix A-3 of this chapter. |
| | d. Measure the CO emission concentration | Method 10 at 40 CFR part 60, appendix A-4 of this chapter. Use a measurement span value of 2 times the concentration of the applicable emission limit. |

[76 FR 15664, Mar. 21, 2011, as amended at 78 FR 7200, Jan. 31, 2013]

**Table 6 to Subpart DDDDD of Part 63—Fuel Analysis Requirements**

As stated in § 63.7521, you must comply with the following requirements for fuel analysis testing for existing, new or reconstructed affected sources. However, equivalent methods (as defined in § 63.7575) may be used in lieu of the prescribed methods at the discretion of the source owner or operator:

| To conduct a fuel analysis for the following pollutant . . . | You must . . . | Using . . . |
|---|---|---|
| 1. Mercury | a. Collect fuel samples | Procedure in § 63.7521(c) or ASTM D5192 [a], or ASTM D7430 [a], or ASTM D6883 [a], or ASTM D2234/D2234M [a](for coal) or EPA 1631 or EPA 1631E or ASTM D6323 [a](for solid), or EPA 821-R-01-013 (for liquid or solid), or ASTM D4177 [a](for liquid), or ASTM D4057 [a](for liquid), or equivalent. |
| | b. Composite fuel samples | Procedure in § 63.7521(d) or equivalent. |

| To conduct a fuel analysis for the following pollutant . . . | You must . . . | Using . . . |
|---|---|---|
| | c. Prepare composited fuel samples | EPA SW-846-3050B [a](for solid samples), EPA SW-846-3020A [a](for liquid samples), ASTM D2013/D2013M [a](for coal), ASTM D5198 [a](for biomass), or EPA 3050 [a](for solid fuel), or EPA 821-R-01-013 [a](for liquid or solid), or equivalent. |
| | d. Determine heat content of the fuel type | ASTM D5865 [a](for coal) or ASTM E711 [a](for biomass), or ASTM D5864 [a]for liquids and other solids, or ASTM D240 [a]or equivalent. |
| | e. Determine moisture content of the fuel type | ASTM D3173 [a], ASTM E871 [a], or ASTM D5864 [a], or ASTM D240, or ASTM D95 [a](for liquid fuels), or ASTM D4006 [a](for liquid fuels), or ASTM D4177 [a](for liquid fuels) or ASTM D4057 [a](for liquid fuels), or equivalent. |
| | f. Measure mercury concentration in fuel sample | ASTM D6722 [a](for coal), EPA SW-846-7471B [a](for solid samples), or EPA SW-846-7470A [a](for liquid samples), or equivalent. |
| | g. Convert concentration into units of pounds of mercury per MMBtu of heat content | Equation 8 in § 63.7530. |
| | h. Calculate the mercury emission rate from the boiler or process heater in units of pounds per million Btu | Equations 10 and 12 in § 63.7530. |
| 2. HCl | a. Collect fuel samples | Procedure in § 63.7521(c) or ASTM D5192 [a], or ASTM D7430 [a], or ASTM D6883 [a], or ASTM D2234/D2234M [a](for coal) or ASTM D6323 [a](for coal or biomass), ASTM D4177 [a](for liquid fuels) or ASTM D4057 [a](for liquid fuels), or equivalent. |
| | b. Composite fuel samples | Procedure in § 63.7521(d) or equivalent. |
| | c. Prepare composited fuel samples | EPA SW-846-3050B [a](for solid samples), EPA SW-846-3020A [a](for liquid samples), ASTM D2013/D2013M§[a](for coal), or ASTM D5198§[a](for biomass), or EPA 3050 [a]or equivalent. |
| | d. Determine heat content of the fuel type | ASTM D5865 [a](for coal) or ASTM E711 [a](for biomass), ASTM D5864, ASTM D240 [a]or equivalent. |
| | e. Determine moisture content of the fuel type | ASTM D3173 [a]or ASTM E871 [a], or D5864 [a], or ASTM D240 [a], or ASTM D95[a](for liquid fuels), or ASTM D4006 [a](for liquid fuels), or ASTM D4177 [a](for liquid fuels) or ASTM D4057 [a](for liquid fuels) or equivalent. |
| | f. Measure chlorine concentration in fuel sample | EPA SW-846-9250 [a], ASTM D6721 [a], ASTM D4208 [a](for coal), or EPA SW-846-5050 [a]or ASTM E776 [a](for solid fuel), or EPA SW-846-9056 [a]or SW-846-9076 [a](for solids or liquids) or equivalent. |
| | g. Convert concentrations into units of pounds of HCl per MMBtu of heat content | Equation 7 in § 63.7530. |
| | h. Calculate the HCl emission rate from the boiler or process heater in units of pounds per million Btu | Equations 10 and 11 in § 63.7530. |
| 3. Mercury Fuel Specification for other gas 1 fuels | a. Measure mercury concentration in the fuel sample and convert to units of micrograms per cubic meter | Method 30B (M30B) at 40 CFR part 60, appendix A-8 of this chapter or ASTM D5954 [a], ASTM D6350 [a], ISO 6978-1:2003(E) [a], or ISO 6978-2:2003(E) [a], or EPA-1631 [a]or equivalent. |

| To conduct a fuel analysis for the following pollutant . . . | You must . . . | Using . . . |
|---|---|---|
| | b. Measure mercury concentration in the exhaust gas when firing only the other gas 1 fuel is fired in the boiler or process heater | Method 29, 30A, or 30B (M29, M30A, or M30B) at 40 CFR part 60, appendix A-8 of this chapter or Method 101A or Method 102 at 40 CFR part 61, appendix B of this chapter, or ASTM Method D6784 [a]or equivalent. |
| 4. TSM for solid fuels | a. Collect fuel samples | Procedure in § 63.7521(c) or ASTM D5192 [a], or ASTM D7430 [a], or ASTM D6883 [a], or ASTM D2234/D2234M [a](for coal) or ASTM D6323 [a](for coal or biomass), or ASTM D4177 [a],(for liquid fuels)or ASTM D4057 [a](for liquid fuels),or equivalent. |
| | b. Composite fuel samples | Procedure in § 63.7521(d) or equivalent. |
| | c. Prepare composited fuel samples | EPA SW-846-3050B [a](for solid samples), EPA SW-846-3020A [a](for liquid samples), ASTM D2013/D2013M [a](for coal), ASTM D5198 [a]or TAPPI T266 [a](for biomass), or EPA 3050 [a]or equivalent. |
| | d. Determine heat content of the fuel type | ASTM D5865 [a](for coal) or ASTM E711 [a](for biomass), or ASTM D5864 [a]for liquids and other solids, or ASTM D240 [a]or equivalent. |
| | e. Determine moisture content of the fuel type | ASTM D3173 [a]or ASTM E871 [a], or D5864, or ASTM D240 [a], or ASTM D95 [a](for liquid fuels), or ASTM D4006[a](for liquid fuels), or ASTM D4177 [a](for liquid fuels) or ASTM D4057 [a](for liquid fuels), or equivalent. |
| | f. Measure TSM concentration in fuel sample | ASTM D3683 [a], or ASTM D4606 [a], or ASTM D6357 [a]or EPA 200.8 [a]or EPA SW-846-6020 [a], or EPA SW-846-6020A [a], or EPA SW-846-6010C [a], EPA 7060 [a]or EPA 7060A [a](for arsenic only), or EPA SW-846-7740 [a](for selenium only). |
| | g. Convert concentrations into units of pounds of TSM per MMBtu of heat content | Equation 9 in § 63.7530. |
| | h. Calculate the TSM emission rate from the boiler or process heater in units of pounds per million Btu | Equations 10 and 13 in § 63.7530. |

[a] Incorporated by reference, see § 63.14.

[78 FR 7201, Jan. 31, 2013]

**Table 7 to Subpart DDDDD of Part 63—Establishing Operating Limits**

As stated in § 63.7520, you must comply with the following requirements for establishing operating limits:

| If you have an applicable emission limit for . . . | And your operating limits are based on . . . | You must . . . | Using . . . | According to the following requirements |
|---|---|---|---|---|
| 1. PM, TSM, or mercury | a. Wet scrubber operating parameters | i. Establish a site-specific minimum scrubber pressure drop and minimum flow rate operating limit according to § 63.7530(b) | (1) Data from the scrubber pressure drop and liquid flow rate monitors and the PM or mercury performance test | (a) You must collect scrubber pressure drop and liquid flow rate data every 15 minutes during the entire period of the performance tests. |
| | | | | (b) Determine the lowest hourly average scrubber pressure drop and liquid flow rate by computing the hourly averages using all of the 15-minute readings taken during each performance test. |
| | b. Electrostatic precipitator operating parameters (option only for units that operate wet scrubbers) | i. Establish a site-specific minimum total secondary electric power input according to § 63.7530(b) | (1) Data from the voltage and secondary amperage monitors during the PM or mercury performance test | (a) You must collect secondary voltage and secondary amperage for each ESP cell and calculate total secondary electric power input data every 15 minutes during the entire period of the performance tests. |
| | | | | (b) Determine the average total secondary electric power input by computing the hourly averages using all of the 15-minute readings taken during each performance test. |
| 2. HCl | a. Wet scrubber operating parameters | i. Establish site-specific minimum pressure drop, effluent pH, and flow rate operating limits according to § 63.7530(b) | (1) Data from the pressure drop, pH, and liquid flow-rate monitors and the HCl performance test | (a) You must collect pH and liquid flow-rate data every 15 minutes during the entire period of the performance tests. |
| | | | | (b) Determine the hourly average pH and liquid flow rate by computing the hourly averages using all of the 15-minute readings taken during each performance test. |

| If you have an applicable emission limit for . . . | And your operating limits are based on . . . | You must . . . | Using . . . | According to the following requirements |
|---|---|---|---|---|
| | b. Dry scrubber operating parameters | i. Establish a site-specific minimum sorbent injection rate operating limit according to § 63.7530(b). If different acid gas sorbents are used during the HCl performance test, the average value for each sorbent becomes the site-specific operating limit for that sorbent | (1) Data from the sorbent injection rate monitors and HCl or mercury performance test | (a) You must collect sorbent injection rate data every 15 minutes during the entire period of the performance tests. |
| | | | | (b) Determine the hourly average sorbent injection rate by computing the hourly averages using all of the 15-minute readings taken during each performance test. |
| | | | | (c) Determine the lowest hourly average of the three test run averages established during the performance test as your operating limit. When your unit operates at lower loads, multiply your sorbent injection rate by the load fraction (e.g., for 50 percent load, multiply the injection rate operating limit by 0.5) to determine the required injection rate. |
| | c. Alternative Maximum $SO_2$ emission rate | i. Establish a site-specific maximum $SO_2$ emission rate operating limit according to § 63.7530(b) | (1) Data from $SO_2$ CEMS and the HCl performance test | (a) You must collect the $SO_2$ emissions data according to § 63.7525(m) during the most recent HCl performance tests. |
| | | | | (b) The maximum $SO_2$ emission rate is equal to the lowest hourly average $SO_2$ emission rate measured during the most recent HCl performance tests. |
| 3. Mercury | a. Activated carbon injection | i. Establish a site-specific minimum activated carbon injection rate operating limit according to § 63.7530(b) | (1) Data from the activated carbon rate monitors and mercury performance test | (a) You must collect activated carbon injection rate data every 15 minutes during the entire period of the performance tests. |
| | | | | (b) Determine the hourly average activated carbon injection rate by computing the hourly averages using all of the 15-minute readings taken during each performance test. |

| If you have an applicable emission limit for . . . | And your operating limits are based on . . . | You must . . . | Using . . . | According to the following requirements |
|---|---|---|---|---|
| | | | | (c) Determine the lowest hourly average established during the performance test as your operating limit. When your unit operates at lower loads, multiply your activated carbon injection rate by the load fraction (e.g., actual heat input divided by heat input during performance test, for 50 percent load, multiply the injection rate operating limit by 0.5) to determine the required injection rate. |
| 4. Carbon monoxide | a. Oxygen | i. Establish a unit-specific limit for minimum oxygen level according to § 63.7520 | (1) Data from the oxygen analyzer system specified in § 63.7525(a) | (a) You must collect oxygen data every 15 minutes during the entire period of the performance tests. |
| | | | | (b) Determine the hourly average oxygen concentration by computing the hourly averages using all of the 15-minute readings taken during each performance test. |
| | | | | (c) Determine the lowest hourly average established during the performance test as your minimum operating limit. |
| 5. Any pollutant for which compliance is demonstrated by a performance test | a. Boiler or process heater operating load | i. Establish a unit specific limit for maximum operating load according to § 63.7520(c) | (1) Data from the operating load monitors or from steam generation monitors | (a) You must collect operating load or steam generation data every 15 minutes during the entire period of the performance test. |
| | | | | (b) Determine the average operating load by computing the hourly averages using all of the 15-minute readings taken during each performance test. |
| | | | | (c) Determine the average of the three test run averages during the performance test, and multiply this by 1.1 (110 percent) as your operating limit. |

[76 FR 15664, Mar. 21, 2011, as amended at 78 FR 7203, Jan. 31, 2013]

**Table 8 to Subpart DDDDD of Part 63—Demonstrating Continuous Compliance**

As stated in § 63.7540, you must show continuous compliance with the emission limitations for each boiler or process heater according to the following:

| If you must meet the following operating limits or work practice standards . . . | You must demonstrate continuous compliance by . . . |
|---|---|
| 1. Opacity | a. Collecting the opacity monitoring system data according to § 63.7525(c) and § 63.7535; and |
| | b. Reducing the opacity monitoring data to 6-minute averages; and |
| | c. Maintaining opacity to less than or equal to 10 percent (daily block average). |
| 2. PM CPMS | a. Collecting the PM CPMS output data according to § 63.7525; |
| | b. Reducing the data to 30-day rolling averages; and |
| | c. Maintaining the 30-day rolling average PM CPMS output data to less than the operating limit established during the performance test according to § 63.7530(b)(4). |
| 3. Fabric Filter Bag Leak Detection Operation | Installing and operating a bag leak detection system according to § 63.7525 and operating the fabric filter such that the requirements in § 63.7540(a)(9) are met. |
| 4. Wet Scrubber Pressure Drop and Liquid Flow-rate | a. Collecting the pressure drop and liquid flow rate monitoring system data according to §§ 63.7525 and 63.7535; and |
| | b. Reducing the data to 30-day rolling averages; and |
| | c. Maintaining the 30-day rolling average pressure drop and liquid flow-rate at or above the operating limits established during the performance test according to § 63.7530(b). |
| 5. Wet Scrubber pH | a. Collecting the pH monitoring system data according to §§ 63.7525 and 63.7535; and |
| | b. Reducing the data to 30-day rolling averages; and |
| | c. Maintaining the 30-day rolling average pH at or above the operating limit established during the performance test according to § 63.7530(b). |
| 6. Dry Scrubber Sorbent or Carbon Injection Rate | a. Collecting the sorbent or carbon injection rate monitoring system data for the dry scrubber according to §§ 63.7525 and 63.7535; and |
| | b. Reducing the data to 30-day rolling averages; and |
| | c. Maintaining the 30-day rolling average sorbent or carbon injection rate at or above the minimum sorbent or carbon injection rate as defined in § 63.7575. |
| 7. Electrostatic Precipitator Total Secondary Electric Power Input | a. Collecting the total secondary electric power input monitoring system data for the electrostatic precipitator according to §§ 63.7525 and 63.7535; and |
| | b. Reducing the data to 30-day rolling averages; and |
| | c. Maintaining the 30-day rolling average total secondary electric power input at or above the operating limits established during the performance test according to § 63.7530(b). |
| 8. Emission limits using fuel analysis | a. Conduct monthly fuel analysis for HCl or mercury or TSM according to Table 6 to this subpart; and |
| | b. Reduce the data to 12-month rolling averages; and |
| | c. Maintain the 12-month rolling average at or below the applicable emission limit for HCl or mercury or TSM in Tables 1 and 2 or 11 through 13 to this subpart. |
| 9. Oxygen content | a. Continuously monitor the oxygen content using an oxygen analyzer system according to § 63.7525(a). This requirement does not apply to units that install an oxygen trim system since these units will set the trim system to the level specified in § 63.7525(a)(2). |
| | b. Reducing the data to 30-day rolling averages; and |

| If you must meet the following operating limits or work practice standards . . . | You must demonstrate continuous compliance by . . . |
|---|---|
| | c. Maintain the 30-day rolling average oxygen content at or above the lowest hourly average oxygen level measured during the most recent CO performance test. |
| 10. Boiler or process heater operating load | a. Collecting operating load data or steam generation data every 15 minutes. |
| | b. Maintaining the operating load such that it does not exceed 110 percent of the highest hourly average operating load recorded during the most recent performance test according to § 63.7520(c). |
| 11. $SO_2$emissions using $SO_2$CEMS | a. Collecting the $SO_2$CEMS output data according to § 63.7525; |
| | b. Reducing the data to 30-day rolling averages; and |
| | c. Maintaining the 30-day rolling average $SO_2$CEMS emission rate to a level at or below the minimum hourly $SO_2$rate measured during the most recent HCl performance test according to § 63.7530. |

[78 FR 7204, Jan. 31, 2013]

**Table 9 to Subpart DDDDD of Part 63—Reporting Requirements**

As stated in § 63.7550, you must comply with the following requirements for reports:

| You must submit a(n) | The report must contain . . . | You must submit the report . . . |
|---|---|---|
| 1. Compliance report | a. Information required in § 63.7550(c)(1) through (5); and | Semiannually, annually, biennially, or every 5 years according to the requirements in § 63.7550(b). |
| | b. If there are no deviations from any emission limitation (emission limit and operating limit) that applies to you and there are no deviations from the requirements for work practice standards in Table 3 to this subpart that apply to you, a statement that there were no deviations from the emission limitations and work practice standards during the reporting period. If there were no periods during which the CMSs, including continuous emissions monitoring system, continuous opacity monitoring system, and operating parameter monitoring systems, were out-of-control as specified in § 63.8(c)(7), a statement that there were no periods during which the CMSs were out-of-control during the reporting period; and | |
| | c. If you have a deviation from any emission limitation (emission limit and operating limit) where you are not using a CMS to comply with that emission limit or operating limit, or a deviation from a work practice standard during the reporting period, the report must contain the information in § 63.7550(d); and | |
| | d. If there were periods during which the CMSs, including continuous emissions monitoring system, continuous opacity monitoring system, and operating parameter monitoring systems, were out-of-control as specified in § 63.8(c)(7), or otherwise not operating, the report must contain the information in § 63.7550(e) | |

[76 FR 15664, Mar. 21, 2011, as amended at 78 FR 7205, Jan. 31, 2013]

**Table 10 to Subpart DDDDD of Part 63—Applicability of General Provisions to Subpart DDDDD**

As stated in § 63.7565, you must comply with the applicable General Provisions according to the following:

| Citation | Subject | Applies to subpart DDDDD |
|---|---|---|
| § 63.1 | Applicability | Yes. |
| § 63.2 | Definitions | Yes. Additional terms defined in § 63.7575 |
| § 63.3 | Units and Abbreviations | Yes. |
| § 63.4 | Prohibited Activities and Circumvention | Yes. |
| § 63.5 | Preconstruction Review and Notification Requirements | Yes. |
| § 63.6(a), (b)(1)-(b)(5), (b)(7), (c) | Compliance with Standards and Maintenance Requirements | Yes. |
| § 63.6(e)(1)(i) | General duty to minimize emissions. | No. See § 63.7500(a)(3) for the general duty requirement. |
| § 63.6(e)(1)(ii) | Requirement to correct malfunctions as soon as practicable. | No. |
| § 63.6(e)(3) | Startup, shutdown, and malfunction plan requirements. | No. |
| § 63.6(f)(1) | Startup, shutdown, and malfunction exemptions for compliance with non-opacity emission standards. | No. |
| § 63.6(f)(2) and (3) | Compliance with non-opacity emission standards. | Yes. |
| § 63.6(g) | Use of alternative standards | Yes. |
| § 63.6(h)(1) | Startup, shutdown, and malfunction exemptions to opacity standards. | No. See § 63.7500(a). |
| § 63.6(h)(2) to (h)(9) | Determining compliance with opacity emission standards | Yes. |
| § 63.6(i) | Extension of compliance | Yes. Note: Facilities may also request extensions of compliance for the installation of combined heat and power, waste heat recovery, or gas pipeline or fuel feeding infrastructure as a means of complying with this subpart. |
| § 63.6(j) | Presidential exemption. | Yes. |
| § 63.7(a), (b), (c), and (d) | Performance Testing Requirements | Yes. |
| § 63.7(e)(1) | Conditions for conducting performance tests | No. Subpart DDDDD specifies conditions for conducting performance tests at § 63.7520(a) to (c). |
| § 63.7(e)(2)-(e)(9), (f), (g), and (h) | Performance Testing Requirements | Yes. |
| § 63.8(a) and (b) | Applicability and Conduct of Monitoring | Yes. |

| Citation | Subject | Applies to subpart DDDDD |
|---|---|---|
| § 63.8(c)(1) | Operation and maintenance of CMS | Yes. |
| § 63.8(c)(1)(i) | General duty to minimize emissions and CMS operation | No. See § 63.7500(a)(3). |
| § 63.8(c)(1)(ii) | Operation and maintenance of CMS | Yes. |
| § 63.8(c)(1)(iii) | Startup, shutdown, and malfunction plans for CMS | No. |
| § 63.8(c)(2) to (c)(9) | Operation and maintenance of CMS | Yes. |
| § 63.8(d)(1) and (2) | Monitoring Requirements, Quality Control Program | Yes. |
| § 63.8(d)(3) | Written procedures for CMS | Yes, except for the last sentence, which refers to a startup, shutdown, and malfunction plan. Startup, shutdown, and malfunction plans are not required. |
| § 63.8(e) | Performance evaluation of a CMS | Yes. |
| § 63.8(f) | Use of an alternative monitoring method. | Yes. |
| § 63.8(g) | Reduction of monitoring data | Yes. |
| § 63.9 | Notification Requirements | Yes. |
| § 63.10(a), (b)(1) | Recordkeeping and Reporting Requirements | Yes. |
| § 63.10(b)(2)(i) | Recordkeeping of occurrence and duration of startups or shutdowns | Yes. |
| § 63.10(b)(2)(ii) | Recordkeeping of malfunctions | No. See § 63.7555(d)(7) for recordkeeping of occurrence and duration and § 63.7555(d)(8) for actions taken during malfunctions. |
| § 63.10(b)(2)(iii) | Maintenance records | Yes. |
| § 63.10(b)(2)(iv) and (v) | Actions taken to minimize emissions during startup, shutdown, or malfunction | No. |
| § 63.10(b)(2)(vi) | Recordkeeping for CMS malfunctions | Yes. |
| § 63.10(b)(2)(vii) to (xiv) | Other CMS requirements | Yes. |
| § 63.10(b)(3) | Recordkeeping requirements for applicability determinations | No. |
| § 63.10(c)(1) to (9) | Recordkeeping for sources with CMS | Yes. |
| § 63.10(c)(10) and (11) | Recording nature and cause of malfunctions, and corrective actions | No. See § 63.7555(d)(7) for recordkeeping of occurrence and duration and § 63.7555(d)(8) for actions taken during malfunctions. |
| § 63.10(c)(12) and (13) | Recordkeeping for sources with CMS | Yes. |
| § 63.10(c)(15) | Use of startup, shutdown, and malfunction plan | No. |

| Citation | Subject | Applies to subpart DDDDD |
|---|---|---|
| § 63.10(d)(1) and (2) | General reporting requirements | Yes. |
| § 63.10(d)(3) | Reporting opacity or visible emission observation results | No. |
| § 63.10(d)(4) | Progress reports under an extension of compliance | Yes. |
| § 63.10(d)(5) | Startup, shutdown, and malfunction reports | No. See § 63.7550(c)(11) for malfunction reporting requirements. |
| § 63.10(e) | Additional reporting requirements for sources with CMS | Yes. |
| § 63.10(f) | Waiver of recordkeeping or reporting requirements | Yes. |
| § 63.11 | Control Device Requirements | No. |
| § 63.12 | State Authority and Delegation | Yes. |
| § 63.13-63.16 | Addresses, Incorporation by Reference, Availability of Information, Performance Track Provisions | Yes. |
| § 63.1(a)(5),(a)(7)-(a)(9), (b)(2), (c)(3)-(4), (d), 63.6(b)(6), (c)(3), (c)(4), (d), (e)(2), (e)(3)(ii), (h)(3), (h)(5)(iv), 63.8(a)(3), 63.9(b)(3), (h)(4), 63.10(c)(2)-(4), (c)(9). | Reserved | No. |

[76 FR 15664, Mar. 21, 2011, as amended at 78 FR 7205, Jan. 31, 2013]

**Table 11 to Subpart DDDDD of Part 63—Toxic Equivalency Factors for Dioxins/Furans**

Table 11 to Subpart DDDDD of Part 63—Toxic Equivalency Factors for Dioxins/Furans

| Dioxin/furan congener | Toxic equivalency factor |
|---|---|
| 2,3,7,8-tetrachlorinated dibenzo-p-dioxin | 1 |
| 1,2,3,7,8-pentachlorinated dibenzo-p-dioxin | 1 |
| 1,2,3,4,7,8-hexachlorinated dibenzo-p-dioxin | 0.1 |
| 1,2,3,7,8,9-hexachlorinated dibenzo-p-dioxin | 0.1 |
| 1,2,3,6,7,8-hexachlorinated dibenzo-p-dioxin | 0.1 |
| 1,2,3,4,6,7,8-heptachlorinated dibenzo-p-dioxin | 0.01 |
| octachlorinated dibenzo-p-dioxin | 0.0003 |
| 2,3,7,8-tetrachlorinated dibenzofuran | 0.1 |
| 2,3,4,7,8-pentachlorinated dibenzofuran | 0.3 |
| 1,2,3,7,8-pentachlorinated dibenzofuran | 0.03 |
| 1,2,3,4,7,8-hexachlorinated dibenzofuran | 0.1 |
| 1,2,3,6,7,8-hexachlorinated dibenzofuran | 0.1 |
| 1,2,3,7,8,9-hexachlorinated dibenzofuran | 0.1 |
| 2,3,4,6,7,8-hexachlorinated dibenzofuran | 0.1 |

| Dioxin/furan congener | Toxic equivalency factor |
|---|---|
| 1,2,3,4,6,7,8-heptachlorinated dibenzofuran | 0.01 |
| 1,2,3,4,7,8,9-heptachlorinated dibenzofuran | 0.01 |
| octachlorinated dibenzofuran | 0.0003 |

[76 FR 15664, Mar. 21, 2011]

EDITORIAL NOTE: At 78 FR 7206, Jan. 31, 2013, Table 11 was added, effective Apr. 1, 2013. However Table 11 could not be added as a Table 11 is already in existence.

**Table 12 to Subpart DDDDD of Part 63—Alternative Emission Limits for New or Reconstructed Boilers and Process Heaters That Commenced Construction or Reconstruction After June 4, 2010, and Before May 20, 2011**

| If your boiler or process heater is in this subcategory | For the following pollutants | The emissions must not exceed the following emission limits, except during periods of startup and shutdown | Using this specified sampling volume or test run duration |
|---|---|---|---|
| 1. Units in all subcategories designed to burn solid fuel | a. Mercury | 3.5E-06 lb per MMBtu of heat input | For M29, collect a minimum of 2 dscm per run; for M30A or M30B, collect a minimum sample as specified in the method; for ASTM D6784 [a]collect a minimum of 2 dscm. |
| 2. Units in all subcategories designed to burn solid fuel that combust at least 10 percent biomass/bio-based solids on an annual heat input basis and less than 10 percent coal/solid fossil fuels on an annual heat input basis | a. Particulate Matter | 0.008 lb per MMBtu of heat input (30-day rolling average for units 250 MMBtu/hr or greater, 3-run average for units less than 250 MMBtu/hr) | Collect a minimum of 1 dscm per run. |
| | b. Hydrogen Chloride | 0.004 lb per MMBtu of heat input | For M26A, collect a minimum of 1 dscm per run; for M26, collect a minimum of 60 liters per run. |
| 3. Units in all subcategories designed to burn solid fuel that combust at least 10 percent coal/solid fossil fuels on an annual heat input basis and less than 10 percent biomass/bio-based solids on an annual heat input basis | a. Particulate Matter | 0.0011 lb per MMBtu of heat input (30-day rolling average for units 250 MMBtu/hr or greater, 3-run average for units less than 250 MMBtu/hr) | Collect a minimum of 3 dscm per run. |
| | b. Hydrogen Chloride | 0.0022 lb per MMBtu of heat input | For M26A, collect a minimum of 1 dscm per run; for M26, collect a minimum of 60 liters per run. |
| 4. Units designed to burn pulverized coal/solid fossil fuel | a. CO | 90 ppm by volume on a dry basis corrected to 3 percent oxygen | 1 hr minimum sampling time. |
| | b. Dioxins/Furans | 0.003 ng/dscm (TEQ) corrected to 7 percent oxygen | Collect a minimum of 4 dscm per run. |
| 5. Stokers designed to burn coal/solid fossil fuel | a. CO | 7 ppm by volume on a dry basis corrected to 3 percent oxygen | 1 hr minimum sampling time. |

| If your boiler or process heater is in this subcategory | For the following pollutants | The emissions must not exceed the following emission limits, except during periods of startup and shutdown | Using this specified sampling volume or test run duration |
|---|---|---|---|
| | b. Dioxins/Furans | 0.003 ng/dscm (TEQ) corrected to 7 percent oxygen | Collect a minimum of 4 dscm per run. |
| 6. Fluidized bed units designed to burn coal/solid fossil fuel | a. CO | 30 ppm by volume on a dry basis corrected to 3 percent oxygen | 1 hr minimum sampling time. |
| | b. Dioxins/Furans | 0.002 ng/dscm (TEQ) corrected to 7 percent oxygen | Collect a minimum of 4 dscm per run. |
| 7. Stokers designed to burn biomass/bio-based solids | a. CO | 560 ppm by volume on a dry basis corrected to 3 percent oxygen | 1 hr minimum sampling time. |
| | b. Dioxins/Furans | 0.005 ng/dscm (TEQ) corrected to 7 percent oxygen | Collect a minimum of 4 dscm per run. |
| 8. Fluidized bed units designed to burn biomass/bio-based solids | a. CO | 260 ppm by volume on a dry basis corrected to 3 percent oxygen | 1 hr minimum sampling time. |
| | b. Dioxins/Furans | 0.02 ng/dscm (TEQ) corrected to 7 percent oxygen | Collect a minimum of 4 dscm per run. |
| 9. Suspension burners/Dutch Ovens designed to burn biomass/bio-based solids | a. CO | 1,010 ppm by volume on a dry basis corrected to 3 percent oxygen | 1 hr minimum sampling time. |
| | b. Dioxins/Furans | 0.2 ng/dscm (TEQ) corrected to 7 percent oxygen | Collect a minimum of 4 dscm per run. |
| 10. Fuel cells designed to burn biomass/bio-based solids | a. CO | 470 ppm by volume on a dry basis corrected to 3 percent oxygen | 1 hr minimum sampling time. |
| | b. Dioxins/Furans | 0.003 ng/dscm (TEQ) corrected to 7 percent oxygen | Collect a minimum of 4 dscm per run. |
| 11. Hybrid suspension/grate units designed to burn biomass/bio-based solids | a. CO | 1,500 ppm by volume on a dry basis corrected to 3 percent oxygen | 1 hr minimum sampling time. |
| | b. Dioxins/Furans | 0.2 ng/dscm (TEQ) corrected to 7 percent oxygen | Collect a minimum of 4 dscm per run. |
| 12. Units designed to burn liquid fuel | a. Particulate Matter | 0.002 lb per MMBtu of heat input (30-day rolling average for units 250 MMBtu/hr or greater, 3-run average for units less than 250 MMBtu/hr) | Collect a minimum of 2 dscm per run. |
| | b. Hydrogen Chloride | 0.0032 lb per MMBtu of heat input | For M26A, collect a minimum of 1 dscm per run; for M26, collect a minimum of 60 liters per run. |

| If your boiler or process heater is in this subcategory | For the following pollutants | The emissions must not exceed the following emission limits, except during periods of startup and shutdown | Using this specified sampling volume or test run duration |
|---|---|---|---|
| | c. Mercury | 3.0E-07 lb per MMBtu of heat input | For M29, collect a minimum of 2 dscm per run; for M30A or M30B, collect a minimum sample as specified in the method; for ASTM D6784 [a]collect a minimum of 2 dscm. |
| | d. CO | 3 ppm by volume on a dry basis corrected to 3 percent oxygen | 1 hr minimum sampling time. |
| | e. Dioxins/Furans | 0.002 ng/dscm (TEQ) corrected to 7 percent oxygen | Collect a minimum of 4 dscm per run. |
| 13. Units designed to burn liquid fuel located in non-continental States and territories | a. Particulate Matter | 0.002 lb per MMBtu of heat input (30-day rolling average for units 250 MMBtu/hr or greater, 3-run average for units less than 250 MMBtu/hr) | Collect a minimum of 2 dscm per run. |
| | b. Hydrogen Chloride | 0.0032 lb per MMBtu of heat input | For M26A, collect a minimum of 1 dscm per run; for M26, collect a minimum of 60 liters per run. |
| | c. Mercury | 7.8E-07 lb per MMBtu of heat input | For M29, collect a minimum of 1 dscm per run; for M30A or M30B, collect a minimum sample as specified in the method; for ASTM D6784 [a]collect a minimum of 2 dscm. |
| | d. CO | 51 ppm by volume on a dry basis corrected to 3 percent oxygen | 1 hr minimum sampling time. |
| | e. Dioxins/Furans | 0.002 ng/dscm (TEQ) corrected to 7 percent oxygen | Collect a minimum of 4 dscm per run. |
| 14. Units designed to burn gas 2 (other) gases | a. Particulate Matter | 0.0067 lb per MMBtu of heat input (30-day rolling average for units 250 MMBtu/hr or greater, 3-run average for units less than 250 MMBtu/hr) | Collect a minimum of 1 dscm per run. |
| | b. Hydrogen Chloride | 0.0017 lb per MMBtu of heat input | For M26A, collect a minimum of 1 dscm per run; for M26, collect a minimum of 60 liters per run. |
| | c. Mercury | 7.9E-06 lb per MMBtu of heat input | For M29, collect a minimum of 1 dscm per run; for M30A or M30B, collect a minimum sample as specified in the method; for ASTM D6784 [a]collect a minimum of 2 dscm. |

| If your boiler or process heater is in this subcategory | For the following pollutants | The emissions must not exceed the following emission limits, except during periods of startup and shutdown | Using this specified sampling volume or test run duration |
|---|---|---|---|
| | d. CO | 3 ppm by volume on a dry basis corrected to 3 percent oxygen | 1 hr minimum sampling time. |
| | e. Dioxins/Furans | 0.08 ng/dscm (TEQ) corrected to 7 percent oxygen | Collect a minimum of 4 dscm per run. |

[a] Incorporated by reference, see § 63.14.

[76 FR 15664, Mar. 21, 2011]

EDITORIAL NOTE: At 78 FR 7208, Jan. 31, 2013, Table 12 was added, effective Apr. 1, 2013. However, Table 12 could not be added as a Table 12 is already in existence.

**Table 13 to Subpart DDDDD of Part 63—Alternative Emission Limits for New or Reconstructed Boilers and Process Heaters That Commenced Construction or Reconstruction After December 23, 2011, and Before January 31, 2013**

| If your boiler or process heater is in this subcategory . . . | For the following pollutants . . . | The emissions must not exceed the following emission limits, except during periods of startup and shutdown . . . | Using this specified sampling volume or test run duration . . . |
|---|---|---|---|
| 1. Units in all subcategories designed to burn solid fuel | a. HCl | 0.022 lb per MMBtu of heat input | For M26A, collect a minimum of 1 dscm per run; for M26 collect a minimum of 120 liters per run. |
| | b. Mercury | 8.6E-07 [a]lb per MMBtu of heat input | For M29, collect a minimum of 4 dscm per run; for M30A or M30B, collect a minimum sample as specified in the method; for ASTM D6784 [b]collect a minimum of 4 dscm. |
| 2. Pulverized coal boilers designed to burn coal/solid fossil fuel | a. Carbon monoxide (CO) (or CEMS) | 130 ppm by volume on a dry basis corrected to 3 percent oxygen, 3-run average; or (320 ppm by volume on a dry basis corrected to 3 percent oxygen, 30-day rolling average) | 1 hr minimum sampling time. |
| | b. Filterable PM (or TSM) | 1.1E-03 lb per MMBtu of heat input; or (2.8E-05 lb per MMBtu of heat input) | Collect a minimum of 3 dscm per run. |
| 3. Stokers designed to burn coal/solid fossil fuel | a. CO (or CEMS) | 130 ppm by volume on a dry basis corrected to 3 percent oxygen, 3-run average; or (340 ppm by volume on a dry basis corrected to 3 percent oxygen, 10-day rolling average) | 1 hr minimum sampling time. |
| | b. Filterable PM (or TSM) | 2.8E-02 lb per MMBtu of heat input; or (2.3E-05 lb per MMBtu of heat input) | Collect a minimum of 2 dscm per run. |

| If your boiler or process heater is in this subcategory . . . | For the following pollutants . . . | The emissions must not exceed the following emission limits, except during periods of startup and shutdown . . . | Using this specified sampling volume or test run duration . . . |
|---|---|---|---|
| 4. Fluidized bed units designed to burn coal/solid fossil fuel | a. CO (or CEMS) | 130 ppm by volume on a dry basis corrected to 3 percent oxygen, 3-run average; or (230 ppm by volume on a dry basis corrected to 3 percent oxygen, 30-day rolling average) | 1 hr minimum sampling time. |
| | b. Filterable PM (or TSM) | 1.1E-03 lb per MMBtu of heat input; or (2.3E-05 lb per MMBtu of heat input) | Collect a minimum of 3 dscm per run. |
| 5. Fluidized bed units with an integrated heat exchanger designed to burn coal/solid fossil fuel | a. CO (or CEMS) | 140 ppm by volume on a dry basis corrected to 3 percent oxygen, 3-run average; or (150 ppm by volume on a dry basis corrected to 3 percent oxygen, 30-day rolling average) | 1 hr minimum sampling time. |
| | b. Filterable PM (or TSM) | 1.1E-03 lb per MMBtu of heat input; or (2.3E-05 lb per MMBtu of heat input) | Collect a minimum of 3 dscm per run. |
| 6. Stokers/sloped grate/others designed to burn wet biomass fuel | a. CO (or CEMS) | 620 ppm by volume on a dry basis corrected to 3 percent oxygen, 3-run average; or (410 ppm by volume on a dry basis corrected to 3 percent oxygen, 10-day rolling average) | 1 hr minimum sampling time. |
| | b. Filterable PM (or TSM) | 3.0E-02 lb per MMBtu of heat input; or (2.6E-05 lb per MMBtu of heat input) | Collect a minimum of 2 dscm per run. |
| 7. Stokers/sloped grate/others designed to burn kiln-dried biomass fuel | a. CO | 460 ppm by volume on a dry basis corrected to 3 percent oxygen | 1 hr minimum sampling time. |
| | b. Filterable PM (or TSM) | 3.2E-01 lb per MMBtu of heat input; or (4.0E-03 lb per MMBtu of heat input) | Collect a minimum of 2 dscm per run. |
| 8. Fluidized bed units designed to burn biomass/bio-based solids | a. CO (or CEMS) | 230 ppm by volume on a dry basis corrected to 3 percent oxygen, 3-run average; or (310 ppm by volume on a dry basis corrected to 3 percent oxygen, 30-day rolling average) | 1 hr minimum sampling time. |
| | b. Filterable PM (or TSM) | 9.8E-03 lb per MMBtu of heat input; or (8.3E-05 [a]lb per MMBtu of heat input) | Collect a minimum of 3 dscm per run. |
| 9. Suspension burners designed to burn biomass/bio-based solids | a. CO (or CEMS) | 2,400 ppm by volume on a dry basis corrected to 3 percent oxygen, 3-run average; or (2,000 ppm by volume on a dry basis corrected to 3 percent oxygen, 10-day rolling average) | 1 hr minimum sampling time. |
| | b. Filterable PM (or TSM) | 5.1E-02 lb per MMBtu of heat input; or (6.5E-03 lb per MMBtu of heat input) | Collect a minimum of 2 dscm per run. |
| 10. Dutch Ovens/Pile burners designed to burn biomass/bio-based solids | a. CO (or CEMS) | 810 ppm by volume on a dry basis corrected to 3 percent oxygen, 3-run average; or (520 ppm by volume on a dry basis corrected to 3 percent oxygen, 10-day rolling average) | 1 hr minimum sampling time. |

| If your boiler or process heater is in this subcategory . . . | For the following pollutants . . . | The emissions must not exceed the following emission limits, except during periods of startup and shutdown . . . | Using this specified sampling volume or test run duration . . . |
|---|---|---|---|
| | b. Filterable PM (or TSM) | 3.6E-02 lb per MMBtu of heat input; or (3.9E-05 lb per MMBtu of heat input) | Collect a minimum of 2 dscm per run. |
| 11. Fuel cell units designed to burn biomass/bio-based solids | a. CO | 910 ppm by volume on a dry basis corrected to 3 percent oxygen | 1 hr minimum sampling time. |
| | b. Filterable PM (or TSM) | 2.0E-02 lb per MMBtu of heat input; or (2.9E-05 lb per MMBtu of heat input) | Collect a minimum of 2 dscm per run. |
| 12. Hybrid suspension grate boiler designed to burn biomass/bio-based solids | a. CO (or CEMS) | 1,500 ppm by volume on a dry basis corrected to 3 percent oxygen, 3-run average; or (900 ppm by volume on a dry basis corrected to 3 percent oxygen, 30-day rolling average) | 1 hr minimum sampling time. |
| | b. Filterable PM (or TSM) | 2.6E-02 lb per MMBtu of heat input; or (4.4E-04 lb per MMBtu of heat input) | Collect a minimum of 3 dscm per run. |
| 13. Units designed to burn liquid fuel | a. HCl | 1.2E-03 lb per MMBtu of heat input | For M26A: Collect a minimum of 2 dscm per run; for M26, collect a minimum of 240 liters per run. |
| | b. Mercury | 4.9E-07 [a]lb per MMBtu of heat input | For M29, collect a minimum of 4 dscm per run; for M30A or M30B, collect a minimum sample as specified in the method; for ASTM D6784 [b]collect a minimum of 4 dscm. |
| 14. Units designed to burn heavy liquid fuel | a. CO (or CEMS) | 130 ppm by volume on a dry basis corrected to 3 percent oxygen, 3-run average; or (18 ppm by volume on a dry basis corrected to 3 percent oxygen, 10-day rolling average) | 1 hr minimum sampling time. |
| | b. Filterable PM (or TSM) | 1.3E-03 lb per MMBtu of heat input; or (7.5E-05 lb per MMBtu of heat input) | Collect a minimum of 3 dscm per run. |
| 15. Units designed to burn light liquid fuel | a. CO (or CEMS) | 130 [a]ppm by volume on a dry basis corrected to 3 percent oxygen; or (60 ppm by volume on a dry basis corrected to 3 percent oxygen, 1-day block average). | 1 hr minimum sampling time. |
| | b. Filterable PM (or TSM) | 1.1E-03 [a]lb per MMBtu of heat input; or (2.9E-05 lb per MMBtu of heat input) | Collect a minimum of 3 dscm per run. |
| 16. Units designed to burn liquid fuel that are non-continental units | a. CO | 130 ppm by volume on a dry basis corrected to 3 percent oxygen, 3-run average based on stack test; or (91 ppm by volume on a dry basis corrected to 3 percent oxygen, 3-hour rolling average) | 1 hr minimum sampling time. |
| | b. Filterable PM (or TSM) | 2.3E-02 lb per MMBtu of heat input; or (8.6E-04 lb per MMBtu of heat input) | Collect a minimum of 2 dscm per run. |
| 17. Units designed to burn gas 2 (other) gases | a. CO | 130 ppm by volume on a dry basis corrected to 3 percent oxygen | 1 hr minimum sampling time. |

| If your boiler or process heater is in this subcategory . . . | For the following pollutants . . . | The emissions must not exceed the following emission limits, except during periods of startup and shutdown . . . | Using this specified sampling volume or test run duration . . . |
|---|---|---|---|
| | b. HCl | 1.7E-03 lb per MMBtu of heat input | For M26A, Collect a minimum of 2 dscm per run; for M26, collect a minimum of 240 liters per run. |
| | c. Mercury | 7.9E-06 lb per MMBtu of heat input | For M29, collect a minimum of 3 dscm per run; for M30A or M30B, collect a minimum sample as specified in the method; for ASTM D6784 [b]collect a minimum of 3 dscm. |
| | d. Filterable PM (or TSM) | 6.7E-03 lb per MMBtu of heat input; or (2.1E-04 lb per MMBtu of heat input) | Collect a minimum of 3 dscm per run. |

[a] If you are conducting stack tests to demonstrate compliance and your performance tests for this pollutant for at least 2 consecutive years show that your emissions are at or below this limit and you are not required to conduct testing for CEMS or CPMS monitor certification, you can skip testing according to § 63.7515 if all of the other provision of § 63.7515 are met. For all other pollutants that do not contain a footnote “a”, your performance tests for this pollutant for at least 2 consecutive years must show that your emissions are at or below 75 percent of this limit in order to qualify for skip testing.

[b] Incorporated by reference, see § 63.14.

[78 FR 7210, Jan. 31, 2013]

# Indiana Department of Environmental Management
# Office of Air Quality

## Technical Support Document (TSD) for a Part 70 Significant Source and Significant Permit Modification

### Source Description and Location

| | |
|---|---|
| Source Name: | Countrymark Refining and Logistics, LLC (formerly known as Countrymark Cooperative, LLP) |
| Source Location: | 1200 Refinery Road, Mount Vernon, IN 47620 |
| County: | Posey |
| SIC Code: | 2911 |
| Operation Permit No.: | T 129-25424-00003 |
| Operation Permit Issuance Date: | July 1, 2010 |
| Significant Source Modification No.: | 129-33810-00003 |
| Significant Permit Modification No.: | 129-33813-00003 |
| Permit Reviewer: | Kristen Willoughby |

### Source Definition

This company consists of two (2) plants:

(a) Plant 1, the refinery, is located at 1200 Refinery Road, Mount Vernon, Indiana 47620; and,

(b) Plant 2, the river dock terminal, is located at South Mann Street and Ohio Street, Mount Vernon, Indiana 47620.

On November 24, 2003, in Significant Permit Modification (129-17940-00003), a source determination concluded that Plant 1 (the refinery) and Plant 2 (the river dock terminal) are under the common control of Countrymark Cooperative, LLP and will be considered one source. These two plants are considered one source because they are located on adjacent properties, are under common ownership, and belong to the same industrial grouping. Therefore, the term “source” in the Part 70 documents refers to both Plant 1 and Plant 2 as one source.

Separate Part 70 renewal permits are being issued to Countrymark Cooperative, LLP, solely for administrative purposes:

(a) Plant 1, 129-00003: T129-25424-00003

(b) Plant 2, 129-00037: T129-25574-00037

### Existing Approvals

The source was issued Part 70 Operating Permit Renewal No. T129-25424-00003 on July 1, 2010. There have been no subsequent approvals issued.

### County Attainment Status

The source is located in Posey County.

| Pollutant | Designation |
|---|---|
| $SO_2$ | Better than national standards. |
| CO | Unclassifiable or attainment effective November 15, 1990. |
| $O_3$ | Unclassifiable or attainment effective July 20, 2012, for the 2008 8-hour ozone standard.[1] |
| $PM_{2.5}$ | Unclassifiable or attainment effective April 5, 2005, for the annual $PM_{2.5}$ standard. |
| $PM_{2.5}$ | Unclassifiable or attainment effective December 13, 2009, for the 24-hour $PM_{2.5}$ standard. |
| $PM_{10}$ | Unclassifiable effective November 15, 1990. |
| $NO_2$ | Cannot be classified or better than national standards. |
| Pb | Unclassifiable or attainment effective December 31, 2011. |
| [1]Unclassifiable or attainment effective October 18, 2000, for the 1-hour ozone standard which was revoked effective June 15, 2005. | |

(a) Ozone Standards
Volatile organic compounds (VOC) and Nitrogen Oxides ($NO_x$) are regulated under the Clean Air Act (CAA) for the purposes of attaining and maintaining the National Ambient Air Quality Standards (NAAQS) for ozone. Therefore, VOC and $NO_x$ emissions are considered when evaluating the rule applicability relating to ozone. Posey County has been designated as attainment or unclassifiable for ozone. Therefore, VOC and $NO_x$ emissions were reviewed pursuant to the requirements for Prevention of Significant Deterioration (PSD), 326 IAC 2-2.

(b) $PM_{2.5}$
Posey County has been classified as attainment for $PM_{2.5}$. On May 8, 2008, U.S. EPA promulgated the requirements for Prevention of Significant Deterioration (PSD) for $PM_{2.5}$ emissions. These rules became effective on July 15, 2008. On May 4, 2011, the air pollution control board issued an emergency rule establishing the direct $PM_{2.5}$ significant level at ten (10) tons per year. This rule became effective June 28, 2011. Therefore, direct $PM_{2.5}$, $SO_2$, and NOx emissions were reviewed pursuant to the requirements for Prevention of Significant Deterioration (PSD), 326 IAC 2-2.

(c) Other Criteria Pollutants
Posey County has been classified as attainment or unclassifiable in Indiana for all other criteria pollutants. Therefore, these emissions were reviewed pursuant to the requirements for Prevention of Significant Deterioration (PSD), 326 IAC 2-2.

## Fugitive Emissions

Since this source is classified as a petroleum refinery, it is considered one of the twenty-eight (28) listed source categories, as specified in 326 IAC 2-2, 326 IAC 2-3, or 326 IAC 2-7. Therefore, fugitive emissions are counted toward the determination of PSD, Emission Offset, and Part 70 Permit applicability.

## Source Status

The table below summarizes the potential to emit of the entire source, prior to the proposed modification, after consideration of all enforceable limits established in the effective permits:

| **Pollutant** | **Emissions** (ton/yr) |
|---|---|
| PM | > 100 |
| $PM_{10}$ | > 100 |
| $PM_{2.5}$ | > 100 |
| $SO_2$ | > 100 |
| VOC | > 100 |
| CO | > 100 |
| $NO_X$ | > 100 |
| GHGs as $CO_2e$ | > 100,000 |
| Single HAP | > 10 |
| Total HAPs | > 25 |

(a) This existing source is a major stationary source, under PSD (326 IAC 2-2), because a regulated pollutant is emitted at a rate of 100 tons per year or more, emissions of GHGs are equal to or greater than one hundred thousand (100,000) tons of $CO_2$ equivalent emissions ($CO_2e$) per year and it is one of the twenty-eight (28) listed source categories, as specified in 326 IAC 2-2-1(ff)(1).

(b) These emissions are based upon Part 70 Operating Permit Renewal No. T129-25424-00003.

This existing source is a major source of HAPs, as defined in 40 CFR 63.2, because HAP emissions are greater than ten (10) tons per year for a single HAP and greater than twenty-five (25) tons per year for a combination of HAPs. Therefore, this source is a major source under Section 112 of the Clean Air Act (CAA).

## Description of Proposed Modification

The Office of Air Quality (OAQ) has reviewed a modification application, submitted by Countrymark Refining and Logistics, LLC (formerly known as Countrymark Cooperative, LLP) on October 23, 2013, relating to a name change, a new #5 boiler, a new emergency diesel engine, and the incorporation of consent decree requirements.

The following is a list of the proposed emission units and pollution control device:

(a) One (1) natural gas or refinery gas fired boiler, approved in 2014 for construction, identified as Boiler 5, with a maximum heat input of 118.14 mmBtu/hr, equipped with low NOx burners, and exhausting to stack 132.

Under 40 CFR 60, Subpart Db, the Boiler 5 is considered an affected facility.

Under 40 CFR 60, Subpart Ja, the Boiler 5 is considered an affected facility.

Under 40 CFR 63, Subpart DDDDD, the Boiler 5 is considered an affected facility.

Insignificant Activities

(b) Emergency generators as follows:

(1) Diesel generators not exceeding one thousand six hundred (1,600) horsepower. One (1) diesel fired emergency generator, approved in 2014 for construction, identified as GenB5, with a maximum heat input of 720 hp (500 KW). [40 CFR 60, Subpart IIII] [40 CFR 63, Subpart ZZZZ]

(c) Combustion source flame safety purging on start-up.

(d) Asbestos abatement projects regulated by 326 IAC 14-10.

(e) Routine maintenance and repair of buildings, structures, or vehicles at the source where air emissions from those activities would not be associated with any production process, including the following: Purging of gas lines.

(f) Blowdown for the following: Boiler.

(g) Purge double block and bleed valves.

Other proposed changes:

(a) The Permittee requests the name of the facility be changed from Countrymark Cooperative, LLP to Countrymark Refining and Logistics, LLC.

(b) Boiler 3 has been permanently shut down. All references to Boiler 3 and all applicable requirements will be removed from the permit.

(c) Boiler 2 will be permanently shut down prior to the start-up of Boiler 5.

(d) The option to burn residual oil in Boiler 1, Boiler 2, Boiler 4, crude heater 200-H2 (previously identified as C-11), vacuum heater 200-H4, and vacuum heater 200-H3 will be removed from the permit. Piping has been removed so that these units are no longer capable of burning residual oil.

(e) The following portions of Civil Action No. 3:13-cv-30-RLY-WGH will be incorporated into the permit:

(1) Consent decree definitions.
(2) Force Majeure definition.
(3) Paragraphs 11, 12, 13, 14, 15, 16, 17a, 21, 23, and 24 of the consent decree (FCC emissions limitations and monitoring for SO2, NOx, and CO).
(4) Paragraphs 27, 31a or b, 32, and 38 of the consent decree (Heater and Boiler NOx).
(5) Paragraphs 39, 40, 41, 42, and 43 of the consent decree (Sulfur Recovery Plant).
(6) Paragraphs B25, B39, and B40 of the consent decree (Main Flare Operation).
(7) Paragraph B38 of the consent decree (Sulfur Flare Operation).

The following portions of the Consent Decree are required to be incorporated into a Federally Enforceable Permit prior to termination of the Consent Decree. Countrymark Refining and Logistics, LLC has opted to include the following portions of the Consent Decree at a later, yet to be determined, date.

(1) Paragraphs 17.b.ii(1) or (3) (whichever if either is applicable), 19 (if applicable), 20, 22
(2) Appendix B: Paragraphs B5 - B11, B13 - B15 (except for language related to stipulated penalties), B20 - B22, B26 - B30, B31.b, B32.b-c, B33.a, and B34 - B37.

(f) Add the following insignificant activities to the permit:

Diesel generators not exceeding one thousand six hundred (1,600) horsepower.

(1) One (1) diesel fired emergency generator, installed in 2008, identified as 700-P33 North Pond fire pump, with a maximum heat input of 420 hp (298 KW). [40 CFR 60, Subpart IIII] [40 CFR 63, Subpart ZZZZ]

(2) One (1) diesel fired emergency generator, installed in 2006, identified as 700-C8 Air Compressor, with a maximum heat input of 130 hp (97 KW). [40 CFR 63, Subpart ZZZZ]

(3) One (1) diesel fired emergency generator, installed in 2006, identified as 700-G2 Boilerhouse, with a maximum heat input of 393 hp (293 KW). [40 CFR 63, Subpart ZZZZ]

(4) One (1) diesel fired emergency generator, installed in 1992, identified as 700-P32 No. 2 Fire Pond pump, with a maximum heat input of 302 hp (225 KW). [40 CFR 63, Subpart ZZZZ]

(5) One (1) diesel fired emergency generator, installed in 1984, identified as 1000-P33B, with a maximum heat input of 240 hp (180 KW). [40 CFR 63, Subpart ZZZZ]

(6) One (1) diesel fired emergency generator, installed in 1967, identified as 700-P31 Golf Course pond pump, with a maximum heat input of 130 hp (97 KW). [40 CFR 63, Subpart ZZZZ]

(g) Change the identification of some units to be consistent in naming conventions.

(h) Add the CCR Platformer Unit to section E.3 since this unit is subject to 40 CFR 60, Subpart J.

(i) Add the requirements for 40 CFR 60, Subpart IIII, 40 CFR 63, Subpart ZZZZ, and 40 CFR 63, Subpart DDDDD to the permit.

## Enforcement Issues

This permitting action incorporates some of the requirements of the Consent Decree filed in US et al vs. Countrymark Refining and Logistics, LLC, 3:13-cv-30-RLY-WGH.

## Stack Summary

| Stack ID | Operation | Height (ft) | Diameter (ft) | Flow Rate (acfm) | Temperature ($^0$F) |
|---|---|---|---|---|---|
| Stack 132 | Boiler 5 | 45.00 | 5.00 | 30,545 | 300 |

## Emission Calculations

See Appendix A of this Technical Support Document for detailed emission calculations.

## Permit Level Determination – Part 70

Pursuant to 326 IAC 2-1.1-1(16), Potential to Emit is defined as “the maximum capacity of a stationary source or emission unit to emit any air pollutant under its physical and operational design. Any physical or operational limitation on the capacity of a source to emit an air pollutant, including air pollution control equipment and restrictions on hours of operation or type or amount of material combusted, stored, or processed shall be treated as part of its design if the limitation is enforceable by the U. S. EPA, IDEM, or the appropriate local air pollution control agency.”

The following table is used to determine the appropriate permit level under 326 IAC 2-7-10.5. This table reflects the PTE before controls. Control equipment is not considered federally enforceable until it has been required in a federally enforceable permit.

| **Increase in PTE Before Controls of the Modification 1967** | |
|---|---|
| **Pollutant** | **Potential To Emit** (ton/yr) |
| PM | 0.07 |
| $PM_{10}$ | 0.07 |
| $PM_{2.5}$ | 0.07 |
| $SO_2$ | 0.07 |
| VOC | 0.08 |
| CO | 0.22 |
| $NO_X$ | 1.01 |
| Single HAPs | <10 |
| Total HAPs | 8.81E-04 |

This modification was not subject to the source modification requirements under 326 IAC 2-7-10.5. The changes will be incorporated into the permit as a Significant Permit Modification under 326 IAC 2-7-12(d), because the modification incorporates applicable portions of the requirements of the National Emission Standards for Hazardous Air Pollutants (NESHAPs) for Stationary Reciprocating Internal Combustion Engines, 40 CFR 63, Subpart ZZZZ under Title I of the Clean Air Act (CAA).

| **Increase in PTE Before Controls of the Modification 1984** | |
|---|---|
| **Pollutant** | **Potential To Emit** (ton/yr) |
| PM | 0.13 |
| $PM_{10}$ | 0.13 |
| $PM_{2.5}$ | 0.13 |
| $SO_2$ | 0.12 |
| VOC | 0.15 |
| CO | 0.40 |
| $NO_X$ | 1.86 |
| Single HAPs | <10 |
| Total HAPs | 1.63E-03 |

This modification was not subject to the source modification requirements under 326 IAC 2-7-10.5. The changes will be incorporated into the permit as a Significant Permit Modification under 326 IAC 2-7-12(d), because the modification incorporates applicable portions of the requirements of the National Emission Standards for Hazardous Air Pollutants (NESHAPs) for Stationary Reciprocating Internal Combustion Engines, 40 CFR 63, Subpart ZZZZ under Title I of the Clean Air Act (CAA).

| **Increase in PTE Before Controls of the Modification 1992** | |
|---|---|
| **Pollutant** | **Potential To Emit** (ton/yr) |
| PM | 0.17 |
| $PM_{10}$ | 0.17 |
| $PM_{2.5}$ | 0.17 |
| $SO_2$ | 0.15 |
| VOC | 0.19 |
| CO | 0.50 |
| $NO_X$ | 2.34 |
| Single HAPs | <10 |
| Total HAPs | 2.05E-03 |

This modification was not subject to the source modification requirements under 326 IAC 2-7-10.5. The changes will be incorporated into the permit as a Significant Permit Modification under 326 IAC 2-7-12(d), because the modification incorporates applicable portions of the requirements of the National Emission Standards for Hazardous Air Pollutants (NESHAPs) for Stationary Reciprocating Internal Combustion Engines, 40 CFR 63, Subpart ZZZZ under Title I of the Clean Air Act (CAA).

| **Increase in PTE Before Controls of the Modification 2006** | |
|---|---|
| **Pollutant** | **Potential To Emit** (ton/yr) |
| PM | 0.29 |
| $PM_{10}$ | 0.29 |
| $PM_{2.5}$ | NA |
| $SO_2$ | 0.27 |
| VOC | 0.33 |
| CO | 0.87 |
| $NO_X$ | 4.05 |
| Single HAPs | <10 |
| Total HAPs | <25 |

Note: 700-C8 was installed in case of power failure to run instrument air and 700-C8 Boilerhouse was installed in case of power failure as part of a computer system upgrade. Each of these projects was not done in relation to SSM No. 089-22917-00003.

This modification was not subject to the source modification requirements under 326 IAC 2-7-10.5. The changes will be incorporated into the permit as a Significant Permit Modification under 326 IAC 2-7-12(d), because the modification incorporates applicable portions of the requirements of the National Emission Standards for Hazardous Air Pollutants (NESHAPs) for Stationary Reciprocating Internal Combustion Engines, 40 CFR 63, Subpart ZZZZ under Title I of the Clean Air Act (CAA).

| Increase in PTE Before Controls of the Modification 2008 | |
|---|---|
| **Pollutant** | **Potential To Emit** (ton/yr) |
| PM | 0.23 |
| $PM_{10}$ | 0.23 |
| $PM_{2.5}$ | 0.23 |
| $SO_2$ | 0.22 |
| VOC | 0.26 |
| CO | 0.70 |
| $NO_X$ | 3.26 |
| Single HAPs | <10 |
| Total HAPs | <25 |

Note: This unit replaced a failed unit and was not part of MSM No. 089-26889-00003.

This modification was not subject to the source modification requirements under 326 IAC 2-7-10.5. The changes will be incorporated into the permit as a Significant Permit Modification under 326 IAC 2-7-12(d), because the modification incorporates applicable portions of the requirements of the New Source Performance Standards for Stationary Compression Ignition Internal Combustion Engines (NSPS) (326 IAC 12 and 40 CFR Part 60, Subpart IIII) and National Emission Standards for Hazardous Air Pollutants (NESHAPs) for Stationary Reciprocating Internal Combustion Engines, 40 CFR 63, Subpart ZZZZ under Title I of the Clean Air Act (CAA).

| Increase in PTE Before Controls of the Modification 2014 | |
|---|---|
| **Pollutant** | **Potential To Emit** (ton/yr) |
| PM | 1.20 |
| $PM_{10}$ | 4.61 |
| $PM_{2.5}$ | 4.61 |
| $SO_2$ | 17.60 |
| VOC | 3.42 |
| CO | 51.39 |
| $NO_X$ | 85.10 |
| Single HAPs | <10 |
| Total HAPs | <25 |

Appendix A of this TSD reflects the unrestricted potential emissions of the modification.

This source modification is subject to 326 IAC 2-7-10.5(g)(4)(C), for a modification with a potential to emit greater than 25 tons per year of NOx and 326 IAC 2-7-10.5(b)(2) for a modification that incorporates the control requirements and emission limitations that are set forth in a federal consent decree. Additionally, the modification will be incorporated into the Part 70 Operating Permit through a significant permit modification issued pursuant to 326 IAC 2-7-12(d), because it does require a case-by-case determination of an emission limitation and a significant change to monitoring, reporting, and record keeping.

## Permit Level Determination – PSD

The table below summarizes the potential to emit, reflecting all limits, of the emission units. Any control equipment is considered federally enforceable only after issuance of this Part 70 source and permit modification, and only to the extent that the effect of the control equipment is made practically enforceable in the permit.

| **Potential to Emit of Emergency Engine 1967** (ton/yr) | | | | | | | | | |
|---|---|---|---|---|---|---|---|---|---|
| **Process / Emission Unit** | **PM** | **$PM_{10}$** | **$PM_{2.5}$*** | **$SO_2$** | **VOC** | **CO** | **$NO_X$** | **GHGs - 11/29/13 GWP** | **GHGs - 10/30/09 GWP** |
| 700-P31 Golf Course Pond Pump | 0.07 | 0.07 | 0.07 | 0.07 | 0.08 | 0.22 | 1.01 | 38 | 37 |
| Significant Level | 25 | 15 | 10 | 40 | 40 | 100 | 40 | 75,000 $CO_2e$ | 75,000 $CO_2e$ |

*$PM_{2.5}$ listed is direct $PM_{2.5}$. PM2.5 and GHGs were not regulated pollutants in 1967.

| **Potential to Emit of Emergency Engine 1984** (ton/yr) | | | | | | | | | |
|---|---|---|---|---|---|---|---|---|---|
| **Process / Emission Unit** | **PM** | **$PM_{10}$** | **$PM_{2.5}$*** | **$SO_2$** | **VOC** | **CO** | **$NO_X$** | **GHGs - 11/29/13 GWP** | **GHGs - 10/30/09 GWP** |
| 1000-P33B | 0.13 | 0.13 | 0.13 | 0.12 | 0.15 | 0.40 | 1.86 | 69 | 69 |
| Significant Level | 25 | 15 | 10 | 40 | 40 | 100 | 40 | 75,000 $CO_2e$ | 75,000 $CO_2e$ |

*$PM_{2.5}$ listed is direct $PM_{2.5}$. PM2.5 and GHGs were not regulated pollutants in 1984.

| **Potential to Emit of Emergency Engine 1992** (ton/yr) | | | | | | | | | |
|---|---|---|---|---|---|---|---|---|---|
| **Process / Emission Unit** | **PM** | **$PM_{10}$** | **$PM_{2.5}$*** | **$SO_2$** | **VOC** | **CO** | **$NO_X$** | **GHGs - 11/29/13 GWP** | **GHGs - 10/30/09 GWP** |
| 700-P32 No. 2 Fire Pond Pump | 0.17 | 0.17 | 0.17 | 0.15 | 0.19 | 0.50 | 2.34 | 87 | 87 |
| Significant Level | 25 | 15 | 10 | 40 | 40 | 100 | 40 | 75,000 $CO_2e$ | 75,000 $CO_2e$ |

*$PM_{2.5}$ listed is direct $PM_{2.5}$. PM2.5 and GHGs were not regulated pollutants in 1992.

| **Potential to Emit of Emergency Engine 2006** (ton/yr) | | | | | | | | | |
|---|---|---|---|---|---|---|---|---|---|
| **Process / Emission Unit** | **PM** | **$PM_{10}$** | **$PM_{2.5}$*** | **$SO_2$** | **VOC** | **CO** | **$NO_X$** | **GHGs - 11/29/13 GWP** | **GHGs - 10/30/09 GWP** |
| 700-C8 Air Compressor | 0.07 | 0.07 | 0.07 | 0.07 | 0.08 | 0.22 | 1.01 | 37 | 37 |
| 700-G2 Boilerhouse | 0.22 | 0.22 | 0.22 | 0.20 | 0.25 | 0.66 | 3.05 | 113 | 113 |
| Total for 2006 Insignificant Generators | 0.29 | 0.29 | 0.29 | 0.27 | 0.33 | 0.87 | 4.05 | 151 | 151 |
| Significant Level | 25 | 15 | 10 | 40 | 40 | 100 | 40 | 75,000 $CO_2e$ | 75,000 $CO_2e$ |

*$PM_{2.5}$ listed is direct $PM_{2.5}$. PM2.5 and GHGs were not regulated pollutants in 2006.
Note: 700-C8 was installed in case of power failure to run instrument air and 700-C8 Boilerhouse was installed in case of power failure as part of a computer system upgrade. Each of these projects was not done in relation to SSM No. 089-22917-00003.

| **Potential to Emit of Emergency Engine 2008** (ton/yr) | | | | | | | | | |
|---|---|---|---|---|---|---|---|---|---|
| **Process / Emission Unit** | **PM** | **$PM_{10}$** | **$PM_{2.5}$*** | **$SO_2$** | **VOC** | **CO** | **$NO_X$** | **GHGs - 11/29/13 GWP** | **GHGs - 10/30/09 GWP** |
| 700-P33 North Fire Pump | 0.23 | 0.23 | 0.23 | 0.22 | 0.26 | 0.70 | 3.26 | 121 | 121 |
| Significant Level | 25 | 15 | 10 | 40 | 40 | 100 | 40 | 75,000 $CO_2e$ | 75,000 $CO_2e$ |

*$PM_{2.5}$ listed is direct $PM_{2.5}$. GHGs was not a regulated pollutant in 2008.
Note: This unit replaced a failed unit and was not part of MSM No. 089-26889-00003.

| **Potential to Emit of Emergency Engine 2014** (ton/yr) | | | | | | | | | |
|---|---|---|---|---|---|---|---|---|---|
| **Process / Emission Unit** | **PM** | **$PM_{10}$** | **$PM_{2.5}$*** | **$SO_2$** | **VOC** | **CO** | **$NO_X$** | **GHGs - 11/29/13 GWP** | **GHGs - 10/30/09 GWP** |
| Boiler B5 | 1.14 | 4.56 | 4.56 | 17.59 | 3.30 | 50.35 | 31.05 | 61,239 | 61,247 |
| GenB5 | 0.06 | 0.06 | 0.06 | 2.18E-03 | 0.13 | 1.04 | 1.18 | 210 | 209 |
| **Total for the Modification** | **1.20** | **4.61** | **4.61** | **17.60** | **3.42** | **51.39** | **32.23** | **61,448** | **61,457** |
| Significant Level | 25 | 15 | 10 | 40 | 40 | 100 | 40 | 75,000 $CO_2e$ | 75,000 $CO_2e$ |

*$PM_{2.5}$ listed is direct $PM_{2.5}$.

This modification to an existing major stationary source is not major because the emissions increase is less than the PSD significant levels. Therefore, pursuant to 326 IAC 2-2, the PSD requirements do not apply.

Since this source is considered a major PSD source and the unrestricted potential to emit of this modification is greater than forty (40) tons of $NO_x$ per year, this source has elected to limit the potential to emit of this modification as follows:

The $NO_x$ emission rate from the boiler B5 shall not exceed 31.05 tons per twelve (12) consecutive month period, with compliance determined at the end of each month.

Compliance with this emission limit will ensure that the potential to emit from this modification is less than forty (40) tons of $NO_x$ per year and therefore will render the requirements of 326 IAC 2-2 not applicable.

## Federal Rule Applicability Determination

The following federal rules are applicable to the source due to this modification:

**NSPS:**

(a) This source is not subject to the requirements of the New Source Performance Standard for Fossil-Fuel-Fired Steam Generators (40 CFR 60, Subpart D), because Boiler 5 has a maximum heat input rating less than 250 mmBtu/hr.

(b) This source is not subject to the requirements of the New Source Performance Standard for Electric Utility Steam Generating Units (40 CFR 60, Subpart Da), because Boiler 5 is not an electric utility steam generating unit as defined in 40 CFR 60.41Da.

(c) This source is subject to the New Source Performance Standards for Industrial-Commercial-Institutional Steam Generating Units (40 CFR 60, Subpart Db), which is incorporated by reference as 326 IAC 12. The unit subject to this rule include the following:

(1) One (1) natural gas or refinery gas fired boiler, approved in 2014 for construction, identified as Boiler 5, with a maximum heat input of 118.14 mmBtu/hr, equipped with low NOx burners, and exhausting to stack 132.

Nonapplicable portions of the NSPS will not be included in the permit. This source is subject to the following portions of Subpart Db.

(1) 40 CFR 60.40b (a), (c)
(2) 40 CFR 60.41b
(3) 40 CFR 60.44b (a)(1)(ii), (h), (i)
(4) 40 CFR 60.46b (a), (c), (e)(1), (e)(4)
(5) 40 CFR 60.48b (b), (c), (d), (e)(2), (e)(3), (f), (g)(1)
(6) 40 CFR 60.49b (a)(1), (a)((3), (b), (d), (g), (h)(4), (i), (o), (v), (w)

(d) This source is not subject to the requirements of the New Source Performance Standard for Petroleum Refineries (40 CFR 60, Subpart J), because Boiler 5 it is being constructed after May 14, 2007.

(e) This source is subject to the New Source Performance Standards for Petroleum Refineries for Which Construction, Reconstruction, or Modification Commenced After May 14, 2007 (40 CFR 60, Subpart Ja), which is incorporated by reference as 326 IAC 12. The unit subject to this rule include the following:

(1) One (1) natural gas or refinery gas fired boiler, approved in 2014 for construction, identified as Boiler 5, with a maximum heat input of 118.14 mmBtu/hr, equipped with low NOx burners, and exhausting to stack 132.

Nonapplicable portions of the NSPS will not be included in the permit. This source is subject to the following portions of Subpart Ja.

(1) 40 CFR 60.100a
(2) 40 CFR 60.101a
(3) 40 CFR 60.102a (a), (g), (f)(2)
(4) 40 CFR 60.103a
(5) 40 CFR 60.104a
(6) 40 CFR 60.106a
(7) 40 CFR 60.107a
(8) 40 CFR 60.108a
(9) 40 CFR 60.109a

(f) This source is subject to the New Source Performance Standards for Stationary Comperssion Ignition Internal Combustion Engines (40 CFR 60, Subpart IIII), which is incorporated by reference as 326 IAC 12. The unit subject to this rule include the following:

(1) One (1) diesel fired emergency generator, approved in 2014 for construction, identified as GenB5, with a maximum heat input of 530 hp (350 KW).

(2) One (1) diesel fired emergency generator, installed in 2008, identified as 700-P33 North Pond fire pump, with a maximum heat input of 420 hp (298 KW).

Nonapplicable portions of the NSPS will not be included in the permit. This source is subject to the following portions of Subpart IIII.

(1) 40 CFR 60.4200
(2) 40 CFR 60.4205 (b), (c)
(3) 40 CFR 60.4206
(4) 40 CFR 60.4207 (a), (b)

(5) 40 cFR 60.4208
(6) 40 CFR 60.4211 (f), (g)
(7) 40 CFR 60.4214 (b), (d)
(8) 40 CFR 60.4218
(9) 40 CFR 60.42.19
(10) Table 4
(11) Table 8

**NESHAP:**

(g) This source is subject to the National Emission Standards for Hazardous Air Pollutants for Stationary Reciprocating Internal Combustion Engines (40 CFR 63, Subpart ZZZZ), which is incorporated by reference as 326 IAC 20-82. The unit subject to this rule include the following:

(1) One (1) diesel fired emergency generator, approved in 2014 for construction, identified as GenB5, with a maximum heat input of 530 hp (350 KW).

(2) One (1) diesel fired emergency generator, installed in 2008, identified as 700-P33 North Pond fire pump, with a maximum heat input of 420 hp (298 KW).

(3) One (1) diesel fired emergency generator, installed in 2006, identified as 700-C8 Air Compressor, with a maximum heat input of 130 hp (97 KW).

(4) One (1) diesel fired emergency generator, installed in 2006, identified as 700-G2 Boilerhouse, with a maximum heat input of 393 hp (293 KW).

(5) One (1) diesel fired emergency generator, installed in 1992, identified as 700-P32 No. 2 Fire Pond pump, with a maximum heat input of 302 hp (225 KW).

(6) One (1) diesel fired emergency generator, installed in 1984, identified as 1000-P33B, with a maximum heat input of 240 hp (180 KW).

(7) One (1) diesel fired emergency generator, installed in 1967, identified as 700-P31 Golf Course pond pump, with a maximum heat input of 130 hp (97 KW).

Nonapplicable portions of the NESHAP will not be included in the permit. This source is subject to the following portions of Subpart ZZZZ:

(1) 40 CFR 63.6580
(2) 40 CFR 63.6585 (a), (b)
(3) 40 CFR 63.6590 (a), (c)
(4) 40 CFR 63.6595 (a)
(5) 40 CFR 63.6602
(6) 40 CFR 63.6604 (b)
(7) 40 CFR 63.6625 (e), (f), (h), (i)
(8) 40 CFR 63.6640 (a), (b), (f)
(9) 40 CFR 63.6645 (f)
(10) 40 CFR 63.6660
(11) 40 CFR 63.6665
(12) 40 CFR 63.6670
(13) 40 CFR 63.6675
(14) Table 2c
(15) Table 6
(16) Table 8

The provisions of 40 CFR 63 Subpart A – General Provisions, which are incorporated as 326 IAC 20-1-1, apply to the facility described in this section except when otherwise specified in 40 CFR 63, Subpart ZZZZ.

(h) This source is subject to the National Emission Standards for Hazardous Air Pollutants for Major Sources: Industrial, Commercial, and Institutional Boilers and Process Heaters (40 CFR 63, Subpart DDDDD), which is incorporated by reference as 326 IAC 20-95. The unit subject to this rule include the following:

(1) One (1) Fluid Catalytic Cracking Unit (FCCU) Raw Oil Pre-heater, identified as 500-H101 with a maximum heat input rate of 18.1 million British Thermal Units per hour (mmBtu/hr), combusting refinery fuel gas only (no sour water stripper overhead off-gas combustion), installed in 1945 and exhausting to stack 9;

(2) One (1) Crude heater equipped with a Low-NOx burner, identified as 200-H2 with a maximum heat input rate of 131 mmBtu/hr, combusting refinery fuel gas, installed in 1955 and exhausting to stack 1.

(3) One (1) Unifiner heater, identified as 400-H5 with a maximum heat input rate of 20 mmBtu/hr, combusting refinery fuel gas, installed in 1959 and exhausting to stack 2.

(4) One (1) Cycle oil heater, identified as H-H2 with a maximum heat input rate of 10 mmBtu/hr, combusting refinery fuel gas, installed in 1956 and exhausting to stack 3.

(5) One (1) Naphtha splitter heater, identified as 900-H1 with a maximum heat input rate of 12.2 mmBtu/hr, combusting refinery fuel gas, installed in 1956 and exhausting to stack 4.

(6) One (1) Vacuum heater, identified as 200-H4 with a maximum heat input rate of 14.1 mmBtu/hr, combusting refinery fuel gas, installed in 1950, approved to be modified in 2007, and exhausting to stack 5.

(7) One (1) Old Platformer heater, identified as Naphtha Splitter Reboiler 900-H2 with a maximum heat input rate of 27 mmBtu/hr, combusting refinery fuel gas, installed in 1956 and exhausting to stack 6.

(8) One (1) Alkylation unit heater, identified as 100-H1 with a maximum heat input rate of 13.2 mmBtu/hr, combusting refinery fuel gas and No. 6 residual fuel oil, installed in 1966 and exhausting to stack 7.

(9) One (1) Auxiliary crude heater, identified as 200-H1 with a maximum heat input rate of 10.1 mmBtu/hr, combusting refinery fuel gas, installed in 1966 and exhausting to stack 11;

(10) One (1) Platformer stabilizer , identified as 300-H4 with a maximum heat input rate of 5.92 mmBtu/hr, combusting refinery fuel gas, installed in 1956 and exhausting to stack 12;

(11) One (1) no. 1 boiler, with a maximum heat input rate of 52 mmBtu/hr of process gas, identified as B1 and exhausting to stack 8;

(12) One (1) no. 2 boiler, with a maximum heat input rate of 65 mmBtu/hr of process gas, identified as B2 and exhausting to stack 13;

(13) One (1) Vacuum heater husky, identified as 200-H3 with a maximum heat input rate of 6.27 mmBtu/hr, combusting refinery fuel gas, installed in 1963 and exhausting to stack 64.

(14) One (1) CCR Platformer Unit which includes one (1) CCR Platformer Heater, identified as 300 - H1, H2, H3 with a maximum heat input rate of 70.3 mmBtu/hr, combusting refinery fuel gas, installed in 1992 and exhausting to stack 74. Under

40 CFR 63, Subpart UUU, process vents on the CCR are considered affected sources at a petroleum refinery.

(15) One (1) Hydrotreating Unit Reactor charge heater, identified as 210-H-100,, with a maximum heat input rating of 19.25 MMBtu per hour, combusting refinery fuel gas as a primary fuel and natural gas as a back up fuel, and exhausting through one (1) stack identified as 122, constructed in 2005.

(16) One (1) Hydrotreating Unit Reboiler Stabilizer, identified as 210-H-101, with a maximum heat input rating of 19.94 MMBtu per hour, combusting refinery fuel gas as a primary fuel and natural gas as a back up fuel, and exhausting through one (1) stack identified as 123, constructed in 2005.

(17) One (1) Tail Gas Treatment System and Sulfur Recovery System identified as 124 and consisting of the following: Under 40 CFR 63, Subpart UUU, these facilities and the associated process vents and bypass lines are considered affected sources at a petroleum refinery.

(A) One (1) Claus Unit Startup burner (SRU Burner 520-H-101), identified as 124-1, with a maximum heat input rating of 1.54 MMBtu per hour, combusting natural gas, and exhausting through one (1) stack identified as 124-1 (to be constructed in 2005).

(B) One (1) Tail Gas Treating Unit (TGTU) Incinerator burner (Claus Furnace 520-H-102), identified as 124-2, with a maximum heat input rating of 1.29 MMBtu per hour, combusting refinery fuel gas as a primary fuel and natural as a back fuel, and exhausting through one (1) stack identified as 124-2, constructed in 2005. In the event of unscheduled shutdown of the CCR unit, the Sulfur Recovery Unit effluent will be routed directly to the TGTU incinerator.

(18) One (1) Vacuum heater, identified as 200-H6, with a maximum heat input rate of 5.49 mmBtu/hr, combusting refinery fuel gas and natural gas as a backup, installed in 2005 and exhausting to stack 126.

(19) One (1) boiler identified as B4, constructed in 2006, with a maximum heat input rate of 84.9 MMBtu/hr of process gas and/or natural gas, identified as B4 and exhausting to stack 131. Under the Standards of Performance for Small Industrial-Commercial-Institutional Steam Generating Units NSPS (40 CFR 60, Subpart Dc), the boiler B4, is considered an affected facility.

(20) LSG Reactor Charge Heater, identified as 810-H101, approved for construction in 2008, with a maximum capacity of 5.985 MMBtu, combusting refinery fuel gas only, and venting to stack 128.

(21) One (1) natural gas or refinery gas fired boiler, approved in 2014 for construction, identified as boiler B5, with a maximum heat input of 118.14 mmBtu/hr, equipped with low NOx burners, and exhausting to stack 132.

Nonapplicable portions of the NESHAP will not be included in the permit. This source is subject to the following portions of Subpart DDDDD:

(1) 40 CFR 63.7480
(2) 40 CFR 63.7485
(3) 40 CFR 63.7490 (a), (b), (d)
(4) 40 CFR 63.7495 (a), (d), (d)
(5) 40 CFR 63.7499
(6) 40 CFR 63.7500 (a), (e)
(7) 40 CFR 63.7501

(8) 40 CFR 63.7505 (a)
(9) 40 CFR 63.7510 (a – e), (g)
(10) 40 CFR 63.7515
(11) 40 CFR 63.7520
(12) 40 CFR 63.7521 (a), (b), (f)(1)
(13) 40 CFR 63.7525 (a)
(14) 40 CFR 63.7530
(15) 40 CFR 63.7535
(16) 40 CFR 63.7540
(17) 40 CFR 63.7545 (a),(c-e)
(18) 40 CFR 63.7550
(19) 40 CFR 63.7555
(20) 40 CFR 63.7560
(21) 40 CFR 63.7565
(22) 40 CFR 63.7570
(23) 40 CFR 63.7575
(24) Table 2
(24) Table 3
(25) Table 5
(26) Table 7
(27) Table 8)
(28) Table 9
(29) Table 10

The provisions of 40 CFR 63 Subpart A – General Provisions, which are incorporated as 326 IAC 20-1-1, apply to the facility described in this section except when otherwise specified in 40 CFR 63, Subpart DDDDD.

**CAM:**

(i) Pursuant to 40 CFR 64.2, Compliance Assurance Monitoring (CAM) is applicable to new or modified emission units that involve a pollutant-specific emission unit and meet the following criteria:

(1) has a potential to emit before controls equal to or greater than the Part 70 major source threshold for the pollutant involved;

(2) is subject to an emission limitation or standard for that pollutant; and

(3) uses a control device, as defined in 40 CFR 64.1, to comply with that emission limitation or standard.

The following table is used to identify the applicability of each of the criteria, under 40 CFR 64.1, to each new or modified emission unit involved:

Based on this evaluation, the requirements of 40 CFR Part 64, CAM are not applicable to any of the new unit as part of this modification.

## State Rule Applicability Determination

The following state rules are applicable to the source due to the modification:

**326 IAC 2-2 (PSD)**
PSD applicability is discussed under the Permit Level Determination – PSD section.

**326 IAC 2-4.1 (Major Sources of Hazardous Air Pollutants (HAP))**
Pursuant to 326 IAC 2-4.1-1(b)(2), the requirements of 326 IAC 2-4.1-1 do not apply to a major source specifically regulated, or exempt from regulation, by a standard issued pursuant to Section 112(d), 112(h), or 112(j) of the CAA.

**326 IAC 6-2-4 (Particulate Emission Limitations for Sources of Indirect Heating)**
Pursuant to 326 IAC 6-2-1(d), indirect heating facilities which received permit to construct after September 21, 1983 are subject to the requirements of 326 IAC 6-2-4.

The particulate matter emissions (Pt) shall be limited by the following equation:

$$Pt = \frac{1.09}{Q^{0.26}}$$

Where:

Pt = Pounds of particulate matter emitted per million British thermal units (lb/MMBtu).

Q = Total source maximum operating capacity rating in MMBtu/hr heat input. The maximum operating capacity rating is defined as the maximum capacity at which the facility is operated or the nameplate capacity, whichever is specified in the facility's permit application, except when some lower capacity is contained in the facility's operation permit; in which case, the capacity specified in the operation.

Pursuant to 326 IAC 6-2-4(a), for Q greater than or equal to 10,000 MMBtu/hr, Pt shall not exceed 0.1 lb/MMBtu.

| Indirect Heating Units Which Began Operation After September 21, 1983 | | | | | | |
|---|---|---|---|---|---|---|
| Facility | Construction Date | Operating Capacity (MMBtu/hr) | Q* (MMBt/hr) | Calculated Pt (lb/MMBtu) | Particulate Limitation, (Pt) (lb/MMBtu) | PM PTE based on AP-42 (lb/MMBtu) |
| boiler B5 | 2014 | 118.14 | 255.04 | 0.26 | 0.26 | 0.002 |

Where: Q = Includes the capacity (MMBtu/hr) of the new unit(s) and the capacities for those unit(s) which were in operation at the source at the time the new unit(s) was constructed.
*Note boiler B2 is required to be permanently shut down prior to the startup of boiler B5.

The diesel fired emergency generator, identified as GenB5, is not a source of indirect heating as defined under 326 IAC 1-2-19.

**326 IAC 6-3-2 (Particulate Emission Limitations for Manufacturing Processes)**
Pursuant to 326 IAC 6-3-1(b)(14), the diesel fired emergency generator, identified as GenB5, is exempt from the requirements of 326 IAC 6-3-2 because it has potential emissions less than 0.551 pounds per hour.

## Compliance Determination and Monitoring Requirements

Permits issued under 326 IAC 2-7 are required to ensure that sources can demonstrate compliance with all applicable state and federal rules on a continuous basis. All state and federal rules contain compliance provisions; however, these provisions do not always fulfill the requirement for a continuous demonstration. When this occurs, IDEM, OAQ, in conjunction with the source, must develop specific conditions to satisfy 326 IAC 2-7-5. As a result, Compliance Determination Requirements are included in the permit. The Compliance Determination Requirements in Section D of the permit are those conditions that are found directly within state and federal rules and the violation of which serves as grounds for enforcement action.

If the Compliance Determination Requirements are not sufficient to demonstrate continuous compliance, they will be supplemented with Compliance Monitoring Requirements, also in Section D of the permit. Unlike Compliance Determination Requirements, failure to meet Compliance

Monitoring conditions would serve as a trigger for corrective actions and not grounds for enforcement action. However, a violation in relation to a compliance monitoring condition will arise through a source's failure to take the appropriate corrective actions within a specific time period.

Changes to the compliance determination and monitoring requirements required by the Consent Decree in Civil No. 3:13-CV-00030-RLY-WGH are detailed in the Proposed Changes section of this document.

The Compliance Determination and Monitoring Requirements applicable to this modification are as follows:

(a) The boiler B5 has applicable compliance determination and monitoring conditions as specified below:

(1) Continuous Emission Monitoring

(A) Pursuant to 326 IAC 3-5 (Continuous Monitoring of Emissions) continuous emission monitoring systems for Boiler 5 shall be calibrated, maintained, and operated for measuring $NO_x$, which meet all applicable performance specifications of 326 IAC 3-5-2.

(B) All continuous emissions monitoring systems are subject to monitor system certification requirements pursuant to 326 IAC 3-5-3.

(C) In the event that a breakdown of a $NO_x$ continuous emissions monitoring system (CEMS) occurs, a record shall be made of the time and reason of the breakdown and efforts made to correct the problem.

(D) In the event that a breakdown of a $NO_x$ continuous emissions monitoring system (CEMS) occurs, a record shall be made of the time and reason of the breakdown and efforts made to correct the problem.

These requirements are required to ensure compliance with 326 IAC 2-7 (Part 70) and to render 326 IAC 2-2 (PSD) not applicable.

## Proposed Changes

The changes listed below have been made to Part 70 Operating Permit No. T129-25424-00003. These changes may include Title I changes (ex changes that add or modify synthetic minor emission limits). Deleted language appears as ~~strikethroughs~~ and new language appears in **bold**:

### Summary of Model Updates Throughout the Permit

(a) IDEM, OAQ has decided to remove all references to the source mailing address. IDEM, OAQ will continue to maintain records of the mailing address.

(b) On October 27, 2010, the Indiana Air Pollution Control Board issued revisions to 326 IAC 2. These revisions resulted in changes to the rule citations listed in the permit. These changes are not changes to the underlining provisions. The change is only to cite of these rules in Section A - General Information, Section A - Emission Units and Pollution Control Equipment Summary, Section A - Specifically Regulated Insignificant Activities, Section B - Preventative Maintenance Plan, Section B - Emergency Provisions, Section B - Operational Flexibility, Section B - Advanced Source Modification Approval, Section C - Risk Management Plan, the Facility Descriptions, and Section D - Preventative Maintenance Plan.

(c) On November 3, 2011, the Indiana Air Pollution Control Board issued a revision to 326 IAC 2. The revision resulted in a change to the rule cite of the "responsible official" definition. The rule citation has been changed throughout the permit as follows:

326 IAC 2-7-1~~(34)~~**(35)**

**Summary of Model Updates for B and C Conditions**

IDEM, OAQ has made changes to some of the standard language in the B and C conditions of the permit to help clarify the intent of these conditions. The following revisions have been made to the B and C Sections of the permit:

(a) **Section B - Certification**
IDEM, OAQ has decided to clarify Section B - Certification to be consistent with the rule and to clarify that Section B - Certification only states what a certification must be.

(b) **Section C - Compliance Monitoring**
IDEM is changing the Section C - Compliance Monitoring Condition to clearly describe when new monitoring for new and existing units must begin.

(c) **Section C - Monitoring Methods**
IDEM, OAQ has removed Section C - Monitoring Methods. The conditions that require the monitoring or testing, if required, state what methods shall be used.

(d) **Section C - Instrument Specifications**
IDEM has clarified Section C - Instrument Specifications to indicate that the analog instrument must be capable of measuring the parameters outside the normal range.

(e) **Section C - Maintenance of Continuous Opacity Monitoring Equipment and/or Maintenance of Continuous Emission Monitoring Equipment**
IDEM, OAQ has decided to move Section C - Maintenance of Continuous Opacity Monitoring Equipment and Maintenance of Continuous Emission Monitoring Equipment to Sections D.2 and D.5 since these sections include the Permittee's requirement for CEMs and COMs.

(f) **Section C - General Record Keeping Requirements and Section C - General Reporting Requirements**
IDEM, OAQ has clarified the Permittee's responsibility with regards to record keeping. IDEM, OAQ has clarified the interaction of the Quarterly Deviation and Compliance Monitoring Report and the Emergency Provisions.

On January 22, 2008, U.S. EPA promulgated a rule to address the remand, by the U.S. Court of Appeals for the District of Columbia on June 25, 2005, of the reasonable possibility provisions of the December 31, 2002 major NSR reform rule. IDEM, OAQ has agreed with U.S. EPA to interpret "reasonable possibility" in 326 IAC 2-2 and 326 IAC 2-3 consistent with the January 22, 2008 U.S. EPA rule. To implement this interpretation, IDEM, OAQ is revising Section C - General Record Keeping Requirements and Section C - General Reporting Requirements.

**Summary of Model Updates for D Conditions**

IDEM, OAQ has made changes to some of the standard language in conditions in the D Sections of the permit to help clarify the intent of these conditions. The following revisions have been made to the D Sections of the permit:

(a) For clarity, IDEM, OAQ has changed references to the general conditions such as "in accordance with Section B", "in accordance with Section C", or other similar language to

"Section C...contains the Permittee's obligation with regard to the records required by this condition.

**Summary of Model Updates for the forms**

The following changes have been made to the forms at the end of the permit:

(a) The phrase "of this permit" has been added to the paragraph of the Quarterly Deviation and Compliance Monitoring Report to match the underlying rule.

(b) IDEM, OAQ has clarified the interaction of the Quarterly Deviation and Compliance Monitoring Report and the Emergency Provisions.

**Summary of Modifications Specific to this Permit**

(a) The Permittee's name has been changed throughout the permit as follows:

Countrymark ~~Cooperative, LLP~~ **Refining and Logistics, LLC**

(b) The Part 70 Operating Permit Renewal Number has been corrected throughout the permit as follows:

~~T117-23297-00014~~**T129-25424-00003**

(c) All references to the Southeast Regional Office have been removed as Posey County is located in the Southwest Regional Office's area.

(d) Condition A.1 has been modified to include informaiton about Greenhouse Gas (GHG) emissions.

(e) Conditions A.3 and A.4 and the Facility Description Boxes have been modified to incorporate the new units, remove Boiler 3 from the permit, change the identification of some units, and remove the option to burn residual oil in Boiler 1, Boiler 2, Boiler 4, crude heater 200-H2 (previously identified as C-11), vacuum heater 200-H4, and vacuum heater 200-H3.

(f) The PSD minor limit contained in Condition D.5.4 has been removed since Boilers 1-4 are no longer capable of combusting fuel oil. This limit was specific to fuel oil combustion. Significant Permit Modification (129-20112-00003), issued on March 21, 2005 and Significant Permit Modification (129-23090-00003), issued January 30, 2007, will remain minor modifications under 326 IAC 2-2 (PSD) without this limit.

(g) Condition A.3, Section D.5, and Section E.12 have been updated and new Sections E.13 and E.16 have been added to include the new Boiler 5. Existing units subject to 40 CFR 63, Subpart DDDDD have also been added to new Section E.16.

(h) Condition A.4 has been updated and new Sections E.14 and E.15 have been added to incorporate the new emergency generator GenB5. Existing units subject to 40 CFR 60, Subpart IIII and 40 CFR 63, Subpart ZZZZ have also been added to new Sections E.14 and E.15.

(i) The following portions of Consent Decree in Civil No. 3:13-CV-00030-RLY-WGH have been incorporated into Sections D.2 and D.5: Consent decree definitions, Force Majeure definition, paragraphs 11, 12, 13, 14, 15, 16, 17a, 21, 23, 24, 27, 31a or b, 32, 38, 39, 40, 41, 42, 43, B25, B38, B39, and B40.

(j) The Semi-Annual Natural Gas Fired Boiler Certification and Part 70 Quarterly Reports for Boilers 1-4 have been removed since all boilers are now only capcable of combusting natual gas.

(k) A new Part 70 Quarterly Report has been added for the new Boiler 5.

The permit has been revised as follows:

A.1 General Information [326 IAC 2-7-4(c)][326 IAC 2-7-5(~~15~~**14**)][326 IAC 2-7-1(22)]

The Permittee owns and operates a stationary petroleum refinery.

| | |
|---|---|
| Source Address: | 1200 Refinery Road, Mount Vernon, Indiana 47620 |
| ~~Mailing Address:~~ | ~~1200 Refinery Road, Mount Vernon, Indiana 47620~~ |
| General Source Phone Number: | (812) 838-8133 |
| SIC Code: | 2911 |
| County Location: | Posey |
| Source Location Status: | Attainment for all criteria pollutants |
| Source Status: | Part 70 Operating Permit Program<br>Major Source, under PSD Rules<br>**GHGs greater than one hundred thousand (100,000) tons of $CO_2$ equivalent emissions ($CO_2e$)**<br>Major Source, Section 112 of the Clean Air Act<br>1 of 28 Source Categories |

***

A.3 Emission Units and Pollution Control Equipment Summary
[326 IAC 2-7-4(c)(3)][326 IAC 2-7-5(~~15~~**14**)]

This stationary source consists of the following emission units and pollution control devices:

***

(b) One (1) Fluid Catalytic Cracking Unit (FCCU) Raw Oil Pre-heater, identified as 500-H101 with a maximum heat input rate of 18.1 million British Thermal Units per hour (mmBtu/hr), combusting refinery fuel gas only (no sour water stripper overhead off-gas combustion), installed in 1945 and exhausting to stack 9~~;~~**. Under 40 CFR 63, Subpart DDDDD the Fluid Catalytic Cracking Unit (FCCU) Raw Oil Pre-heater is considered an affected facility.**

(c) One (1) FCCU regenerator, identified as 500V-5 with an average throughput rate of 380 barrels fresh feed per hour, installed in 1950, controlled by a cyclone and exhausting to stack 10. Under 40 CFR 63, Subpart UUU, process vents on the FCCU are considered affected sources at a petroleum refinery. **Under 40 CFR 60, Subpart J, the 500V-5 is considered an affected facility by the Consent Decree as of "Date of Entry" for $SO_2$ and CO.**

***

(f) One (1) Crude heater equipped with a Low-NOx burner, identified as ~~C-II~~ **200-H2** with a maximum heat input rate of 131 mmBtu/hr, combusting refinery fuel gas ~~and No. 6 residual fuel oil~~, installed in 1955 and exhausting to stack 1~~;~~**. Under 40 CFR 63, Subpart DDDDD the Crude heater is considered an affected facility.**

(g) One (1) Unifiner heater, identified as 400-H5 with a maximum heat input rate of 20 mmBtu/hr, combusting refinery fuel gas, installed in 1959 and exhausting to stack 2~~;~~**. Under 40 CFR 63, Subpart DDDDD the Unifiner heater is considered an affected facility.**

(h) One (1) Cycle oil heater, identified as H-H2 with a maximum heat input rate of 10 mmBtu/hr, combusting refinery fuel gas, installed in 1956 and exhausting to stack 3~~;~~**. Under 40 CFR 63, Subpart DDDDD the Cycle oil heater is considered an affected facility.**

(i) One (1) Naphtha splitter heater, identified as 900-H1 with a maximum heat input rate of 12.2 mmBtu/hr, combusting refinery fuel gas, installed in 1956 and exhausting to stack 4~~;~~**. Under 40 CFR 63, Subpart DDDDD the Naphtha splitter heater is considered an affected facility.**

(j) One (1) Vacuum heater, identified as 200-H4 with a maximum heat input rate of 14.1 mmBtu/hr, combusting refinery fuel gas ~~and No. 6 residual fuel oil~~, installed in 1950, approved to be modified in 2007, and exhausting to stack 5~~;~~**. Under 40 CFR 63, Subpart DDDDD the Vacuum heater is considered an affected facility.**

(k) One (1) Old Platformer heater, identified as Naphtha Splitter Reboiler 900-H2 with a maximum heat input rate of 27 mmBtu/hr, combusting refinery fuel gas, installed in 1956 and exhausting to stack 6~~;~~**. Under 40 CFR 63, Subpart DDDDD the Old Platformer heater is considered an affected facility.**

(l) One (1) Alkylation unit heater, identified as 100-H1 with a maximum heat input rate of 13.2 mmBtu/hr, combusting refinery fuel gas and No. 6 residual fuel oil, installed in 1966 and exhausting to stack 7~~;~~**. Under 40 CFR 63, Subpart DDDDD the Alkylation unit heater is considered an affected facility.**

(m) One (1) Auxiliary crude heater, identified as 200-H1 with a maximum heat input rate of 10.1 mmBtu/hr, combusting refinery fuel gas, installed in 1966 and exhausting to stack 11~~;~~**. Under 40 CFR 63, Subpart DDDDD the Auxiliary crude heater is considered an affected facility.**

(n) One (1) Platformer stabilizer reb, identified as 300-H4 with a maximum heat input rate of 5.92 mmBtu/hr, combusting refinery fuel gas, installed in 1956 and exhausting to stack 12~~;~~**. Under 40 CFR 63, Subpart DDDDD the Platformer stabilizer reb is considered an affected facility.**

(o) One (1) no. 1 boiler, with a maximum heat input rate of 52 mmBtu/hr of process gas ~~and/or No. 6 residual oil~~, identified as B1 and exhausting to stack 8~~;~~**. Under 40 CFR 63, Subpart DDDDD the no. 1 boiler is considered an affected facility.**

(p) One (1) no. 2 boiler, with a maximum heat input rate of 65 mmBtu/hr of ~~residual oil and/or~~ process gas, identified as B2 and exhausting to stack 13~~;~~**. Under 40 CFR 63, Subpart DDDDD the no. 2 boiler is considered an affected facility.**

~~(q) One (1) no. 3 boiler, with a maximum heat input rate of 52 mmBtu/hr of residual oil and/or process gas, identified as B3 and exhausting to stack 14;~~

**(q) One (1) natural gas or refinery gas fired boiler, approved in 2014 for construction, identified as boiler B5, with a maximum heat input of 118.14 mmBtu/hr, equipped with low NOx burners, and exhausting to stack 132. Under 40 CFR 60, Subpart Db, the boiler B5 is considered an affected facility. Under 40 CFR 60, Subpart Ja, the boiler B5 is considered an affected facility. Under 40 CFR 63, Subpart DDDDD, the boiler B5 is considered an affected facility.**

(r) One (1) Vacuum heater husky, identified as 200-H3 with a maximum heat input rate of 6.27 mmBtu/hr, combusting refinery fuel gas ~~No. 6 residual fuel oil~~, installed in 1963 and exhausting to stack 64~~;~~**. Under 40 CFR 63, Subpart DDDDD the Vacuum heater husky is considered an affected facility.**

(s) One (1) CCR Platformer Unit which includes one (1) CCR Platformer Heater, identified as 300 - H1, H2, H3 with a maximum heat input rate of 70.3 mmBtu/hr, combusting refinery

fuel gas, installed in 1992 and exhausting to stack 74. Under 40 CFR 63, Subpart UUU, process vents on the CCR are considered affected sources at a petroleum refinery. **Under 40 CFR 60, Subpart J, the CCR Platformer Unit, is considered an affected facility. Under 40 CFR 63, Subpart DDDDD, the CCR is considered an affected facility.**

***

(jj) One (1) Hydrotreating Unit Reactor charge heater**, identified as** ~~(~~210-H-100~~), identified as 122~~, with a maximum heat input rating of 19.25 MMBtu per hour, combusting refinery fuel gas as a primary fuel and natural gas as a back up fuel, and exhausting through one (1) stack identified as 122, constructed in 2005. **Under 40 CFR 60, Subpart J, the Hydrotreating Unit Reactor charge heater, is considered an affected facility. Under 40 CFR 63, Subpart DDDDD, the Hydrotreating Unit Reactor charge heater is considered an affected facility.**

(kk) One (1) Hydrotreating Unit Reboiler Stabilizer**, identified as** ~~(~~210-H-101~~), identified as 123~~, with a maximum heat input rating of 19.94 MMBtu per hour, combusting refinery fuel gas as a primary fuel and natural gas as a back up fuel, and exhausting through one (1) stack identified as 123 constructed in 2005. **Under 40 CFR 60, Subpart J, the Hydrotreating Unit Reboiler Stabilizer, is considered an affected facility. Under 40 CFR 63, Subpart DDDDD, the Hydrotreating Unit Reboiler Stabilizer is considered an affected facility.**

(ll) One (1) Tail Gas Treatment System and Sulfur Recovery System identified as 124 and consisting of the following: Under 40 CFR 63, Subpart UUU, these facilities and the associated process vents and bypass lines are considered affected sources at a petroleum refinery. **Under 40 CFR 60, Subpart Ja, the Tail Gas Treatment System and Sulfur Recovery System, is considered an affected facility by the Consent Decree as of June 3, 2013.**

(1) One (1) Claus Unit Startup burner (SRU Burner 520-H-101), identified as 124-1, with a maximum heat input rating of 1.54 MMBtu per hour, combusting natural gas, and exhausting through one (1) stack identified as 124-1, constructed in 2005. **Under 40 CFR 60, Subpart J, the Claus Unit Startup burner, is considered an affected facility. Under 40 CFR 63, Subpart DDDDD, the Claus Unit Startup burner is considered an affected facility.**

(2) One (1) Tail Gas Treating Unit (TGTU) Incinerator burner (Claus~~e~~ Furnace 520-H-102), identified as 124-2, with a maximum heat input rating of 1.29 MMBtu per hour, combusting refinery fuel gas as a primary fuel and natural as a back fuel, and exhausting through one (1) stack identified as 124-2, constructed in 2005. In the event of unscheduled shutdown of the CCR unit, the Sulfur Recovery Unit effluent will be routed directly to the TGTU incinerator. **Under 40 CFR 60, Subpart J, the Tail Gas Treating Unit (TGTU) Incinerator burner, is considered an affected facility. Under 40 CFR 63, Subpart DDDDD, the Tail Gas Treating Unit (TGTU) Incinerator burner is considered an affected facility.**

(3) One (1) Tail Gas Treating Unit (TGTU) Incinerator (520-H-162), identified as 124-3, with a maximum process flow rate of 48,000 dry standard cubic feet per day, and exhausting through one (1) stack identified as 124-3, constructed in 2005.

(4) One (1) Sour Flare (520-H-163), identified as 124-4, with a maximum burner capacity of 0.92 MMBtu per hour, and a maximum process flow rate of 200 standard cubic feet per hour, and exhausting through one (1) stack identified as 124-4, constructed in 2005. **Under 40 CFR 60, Subpart J, the Sour Flare, is considered an affected facility by the Consent Decree as of March 31, 2013.**

***

(nn) One (1) Vacuum heater, identified as 200-H6, with a maximum heat input rate of 5.49 mmBtu/hr, combusting refinery fuel gas and natural gas as a backup, installed in 2005 and exhausting to stack 126. **Under 40 CFR 63, Subpart DDDDD, the Vacuum heater is considered an affected facility.**

(oo) One (1) boiler identified as B4, constructed in 2006, with a maximum heat input rate of 84.9 MMBtu/hr of process gas ~~and/or No. 6 residual oil~~ and/or natural gas, identified as B4 and exhausting to stack 131.

Under the Standards of Performance for Small Industrial-Commercial-Institutional Steam Generating Units NSPS (40 CFR 60, Subpart Dc), the boiler identified as boiler B4 above is considered an affected facility.

Under the Standards of Performance for Petroleum Refineries (40 CFR Part 60, Subpart J), the boiler identified as boiler B4 above, is considered an affected facility. **Under 40 CFR 63, Subpart DDDDD, the boiler B4 is considered an affected facility.**

(pp) One (1) Low Sulfur Gasoline (LSG) Unit consisting of the following equipment:

(1) LSG Reactor Charge Heater**, identified as** ~~(~~810-H101~~)~~**,** approved for construction in 2008, with a maximum capacity of 5.985 MMBtu, combusting refinery fuel gas only, and venting to stack 128. Under 40 CFR Part 60, Subpart Ja, the LSG Reactor Charge Heater is considered an affected facility. **Under 40 CFR 63, Subpart DDDDD, the LSG Reactor Charge Heater is considered an affected facility.**

***

A.4 Specifically Regulated Insignificant Activities
[326 IAC 2-7-1(21)][326 IAC 2-7-4(c)][326 IAC 2-7-5(~~15~~**14**)]

This stationary source also includes the following insignificant activities which are specifically regulated, as defined in 326 IAC 2-7-1(21):

(a) Metal and related material cutting, fabricating and preparation. [326 IAC 6-3]

(b) Sand blasting or mechanical stripping on tanks and other equipment. [326 IAC 6-3]

(c) Painting on tanks and other equipment. [326 IAC 6-3]

(d) Welding/Cutting of metal for vessel, pipeline and equipment maintenance. [326 IAC 6-3]

**(e) Emergency generators as follows: Diesel generators not exceeding one thousand six hundred (1,600) horsepower.**

**(1) One (1) diesel fired emergency generator, approved in 2014 for construction, identified as GenB5, with a maximum heat input of 720 hp (500 KW). [40 CFR 60, Subpart IIII] [40 CFR 63, Subpart ZZZZ]**

**(2) One (1) diesel fired emergency generator, installed in 2008, identified as 700-P33 North Pond fire pump, with a maximum heat input of 420 hp (298 KW). [40 CFR 60, Subpart IIII] [40 CFR 63, Subpart ZZZZ]**

**(3) One (1) diesel fired emergency generator, installed in 2006, identified as 700-C8 Air Compressor, with a maximum heat input of 130 hp (97 KW). [40 CFR 63, Subpart ZZZZ]**

**(4) One (1) diesel fired emergency generator, installed in 2006, identified as 700-G2 Boilerhouse, with a maximum heat input of 393 hp (293 KW). [40 CFR 63, Subpart ZZZZ]**

**(5) One (1) diesel fired emergency generator, installed in 1992, identified as 700-P32 No. 2 Fire Pond pump, with a maximum heat input of 302 hp (225 KW). [40 CFR 63, Subpart ZZZZ]**

**(6) One (1) diesel fired emergency generator, installed in 1984, identified as 1000-P33B, with a maximum heat input of 240 hp (180 KW). [40 CFR 63, Subpart ZZZZ]**

**(7) One (1) diesel fired emergency generator, installed in 1967, identified as 700-P31 Golf Course pond pump, with a maximum heat input of 130 hp (97 KW). [40 CFR 63, Subpart ZZZZ]**

***

B.2 Permit Term [326 IAC 2-7-5(2)][326 IAC 2-1.1-9.5][326 IAC 2-7-4(a)(1)(D)][IC 13-15-3-6(a)]

(a) This permit, ~~T117-23297-00014~~**T129-25424-00003**, is issued for a fixed term of five (5) years from the issuance date of this permit, as determined in accordance with IC 4-21.5-3-5(f) and IC 13-15-5-3. Subsequent revisions, modifications, or amendments of this permit do not affect the expiration date of this permit or of permits issued pursuant to Title IV of the Clean Air Act and 326 IAC 21 (Acid Deposition Control).

***

B.8 Certification [326 IAC 2-7-4(f)][326 IAC 2-7-6(1)][326 IAC 2-7-5(3)(C)]

(a) A certification required by this permit meets the requirements of 326 IAC 2-7-6(1) if:

(~~i~~**1**) it contains a certification by a "responsible official" as defined by 326 IAC 2-7-1(~~34~~**35**), and

(~~ii~~**(2**) the certification ~~is~~**states that,** based on information and belief formed after reasonable inquiry, the statements and information in the document are true, accurate, and complete.

(b) The Permittee may use the attached Certification Form, or its equivalent with each submittal requiring certification. One (1) certification may cover multiple forms in one (1) submittal.

(c) A "responsible official" is defined at 326 IAC 2-7-1(~~34~~**35**).

B.9 Annual Compliance Certification [326 IAC 2-7-6(5)]

***

(c) The annual compliance certification report shall include the following:

***

The submittal by the Permittee does require a certification that meets the requirements of 326 IAC 2-7-6(1) by a "responsible official" as defined by 326 IAC 2-7-1(~~34~~**35**).

B.10 Preventive Maintenance Plan [326 IAC 2-7-5(~~1),(3) and (13~~**12**)][~~326 IAC 2-7~~**1**-6(1) and (6)]][326 IAC 1-6-3]

***

(b) If required by specific condition(s) in Section D of this permit where no PMP was previously required, the Permittee shall prepare and maintain Preventive Maintenance Plans (PMPs) no later than ninety (90) days after issuance of this permit or ninety (90) days after initial start-up, whichever is later, including the following information on each facility:

***

If, due to circumstances beyond the Permittee's control, the PMPs cannot be prepared and maintained within the above time frame, the Permittee may extend the date an additional ninety (90) days provided the Permittee notifies:

Indiana Department of Environmental Management
Compliance and Enforcement Branch, Office of Air Quality
100 North Senate Avenue
MC 61-53 IGCN 1003
Indianapolis, Indiana 46204-2251

The PMP extension notification does not require a certification that meets the requirements of 326 IAC 2-7-6(1) by a "responsible official" as defined by 326 IAC 2-7-1(~~34~~**35**).

The Permittee shall implement the PMPs.

(c) A copy of the PMPs shall be submitted to IDEM, OAQ upon request and within a reasonable time, and shall be subject to review and approval by IDEM, OAQ. IDEM, OAQ may require the Permittee to revise its PMPs whenever lack of proper maintenance causes or is the primary contributor to an exceedance of any limitation on emissions. The PMPs and their submittal do not require a certification that meets the requirements of 326 IAC 2-7-6(1) by a "responsible official" as defined by 326 IAC 2-7-1(~~34~~**35**).

***

B.11 Emergency Provisions [326 IAC 2-7-16]

***

(b) An emergency, as defined in 326 IAC 2-7-1(12), constitutes an affirmative defense to an action brought for noncompliance with a technology-based emission limitation if the affirmative defense of an emergency is demonstrated through properly signed, contemporaneous operating logs or other relevant evidence that describe the following:

***

(4) For each emergency lasting one (1) hour or more, the Permittee notified IDEM, OAQ ~~,~~ or Southwest ~~Regional Office and Southeast~~ Regional Office within four (4) daytime business hours after the beginning of the emergency, or after the emergency was discovered or reasonably should have been discovered;

Telephone Number: 1-800-451-6027 (ask for Office of Air Quality, Compliance and Enforcement Branch), or
Telephone Number: 317-233-0178 (ask for Office of Air Quality, Compliance and Enforcement Branch)
Facsimile Number: 317-233-6865
Southwest Regional Office phone: (812) 380-2305; fax: (812) 380-2304**.**
~~Southeast Regional Office phone: (812) 358-2027; fax: (812) 358-2058.~~

(5) For each emergency lasting one (1) hour or more, the Permittee submitted the attached Emergency Occurrence Report Form or its equivalent, either by mail or facsimile to:

Indiana Department of Environmental Management
Compliance and Enforcement Branch, Office of Air Quality
100 North Senate Avenue
MC 61-53 IGCN 1003
Indianapolis, Indiana 46204-2251

within two (2) working days of the time when emission limitations were exceeded due to the emergency.

The notice fulfills the requirement of 326 IAC 2-7-5(3)(C)(ii) and must contain the following:

***

The notification which shall be submitted by the Permittee does not require a certification that meets the requirements of 326 IAC 2-7-6(1) by a "responsible official" as defined by 326 IAC 2-7-1(~~34~~**35**).

***

(e) The Permittee seeking to establish the occurrence of an emergency shall make records available upon request to ensure that failure to implement a PMP did not cause or contribute to an exceedance of any limitations on emissions. However, IDEM, OAQ may require that the Preventive Maintenance Plans required under 326 IAC 2-7-4(c)(~~9~~**8**) be revised in response to an emergency.

***

B.13 Prior Permits Superseded [326 IAC 2-1.1-9.5][326 IAC 2-7-10.5]

(a) All terms and conditions of permits established prior to ~~T117-23297-00014~~**T129-25424-00003** and issued pursuant to permitting programs approved into the state implementation plan have been either:

***

B.15 Permit Modification, Reopening, Revocation and Reissuance, or Termination [326 IAC 2-7-5(6)(C)][326 IAC 2-7-8(a)][326 IAC 2-7-9]

(a) This permit may be modified, reopened, revoked and reissued, or terminated for cause. The filing of a request by the Permittee for a Part 70 Operating Permit modification, revocation and reissuance, or termination, or of a notification of planned changes or anticipated noncompliance does not stay any condition of this permit. [326 IAC 2-7-5(6)(C)] The notification by the Permittee does require a certification that meets the requirements of 326 IAC 2-7-6(1) by a "responsible official" as defined by 326 IAC 2-7-1(~~34~~**35**).

***

B.16 Permit Renewal [326 IAC 2-7-3][326 IAC 2-7-4][326 IAC 2-7-8(e)]

(a) The application for renewal shall be submitted using the application form or forms prescribed by IDEM, OAQ and shall include the information specified in 326 IAC 2-7-4. Such information shall be included in the application for each emission unit at this source, except those emission units included on the trivial or insignificant activities list contained in 326 IAC 2-7-1(21) and 326 IAC 2-7-1(~~40~~**42**). The renewal application does require a

certification that meets the requirements of 326 IAC 2-7-6(1) by a "responsible official" as defined by 326 IAC 2-7-1(~~34~~**35**).

***

B.17 Permit Amendment or Modification [326 IAC 2-7-11][326 IAC 2-7-12] [40 CFR 72]

***

(c) Any application requesting an amendment or modification of this permit shall be submitted to:

Indiana Department of Environmental Management
Permit Administration and Support Section, Office of Air Quality
100 North Senate Avenue
MC 61-53 IGCN 1003
Indianapolis, Indiana 46204-2251

Any such application does require a certification that meets the requirements of 326 IAC 2-7-6(1) by a "responsible official" as defined by 326 IAC 2-7-1(~~34~~**35**).

***

B.19 Operational Flexibility [326 IAC 2-7-20][326 IAC 2-7-10.5]

(a) The Permittee may make any change or changes at the source that are described in 326 IAC 2-7-20(b~~),(c),~~**)** or (~~e~~**c**) without a prior permit revision, if each of the following conditions is met:

***

(5) The Permittee maintains records on-site, on a rolling five (5) year basis, which document all such changes and emission trades that are subject to 326 IAC 2-7-20(b~~),(~~**)(1) and (**c~~), or (e~~**)(1**). The Permittee shall make such records available, upon reasonable request, for public review.

Such records shall consist of all information required to be submitted to IDEM, OAQ in the notices specified in 326 IAC 2-7-20(b)(1~~), (c)(1),~~**)** and (~~e)(2~~**c)(1**).

(b) The Permittee may make Section 502(b)(10) of the Clean Air Act changes (this term is defined at 326 IAC 2-7-1(~~36~~**37**)) without a permit revision, subject to the constraint of 326 IAC 2-7-20(a). For each such Section 502(b)(10) of the Clean Air Act change, the required written notification shall include the following:

(1) A brief description of the change within the source;

(2) The date on which the change will occur;

(3) Any change in emissions; and

(4) Any permit term or condition that is no longer applicable as a result of the change.

The notification which shall be submitted is not considered an application form, report or compliance certification. Therefore, the notification by the Permittee does not require a certification that meets the requirements of 326 IAC 2-7-6(1) by a "responsible official" as defined by 326 IAC 2-7-1(~~34~~**35**).

***

B.22 Transfer of Ownership or Operational Control [326 IAC 2-7-11]

***

(b) Any application requesting a change in the ownership or operational control of the source shall contain a written agreement containing a specific date for transfer of permit responsibility, coverage and liability between the current and new Permittee. The application shall be submitted to:

Indiana Department of Environmental Management
Permit Administration and Support Section, Office of Air Quality
100 North Senate Avenue
MC 61-53 IGCN 1003
Indianapolis, Indiana 46204-2251

Any such application does require a certification that meets the requirements of 326 IAC 2-7-6(1) by a "responsible official" as defined by 326 IAC 2-7-1(~~34~~**35**).

***

B.24 Advanced Source Modification Approval [326 IAC 2-7-5(~~16~~**15**)] [326 IAC 2-7-10.5]

***

C.6 Asbestos Abatement Projects [326 IAC 14-10] [326 IAC 18] [40 CFR 61, Subpart M]

***

(d) The notice to be submitted shall include the information enumerated in 326 IAC 14-10-3(3).

All required notifications shall be submitted to:

Indiana Department of Environmental Management
Compliance and Enforcement Branch, Office of Air Quality
100 North Senate Avenue
MC 61-53 IGCN 1003
Indianapolis, Indiana 46204-2251

The notice shall include a signed certification from the owner or operator that the information provided in this notification is correct and that only Indiana licensed workers and project supervisors will be used to implement the asbestos removal project. The notifications do not require a certification that meets the requirements of 326 IAC 2-7-6(1) by a "responsible official" as defined by 326 IAC 2-7-1(~~34~~**35**).

***

C.7 Performance Testing [326 IAC 3-6]

(a) For performance testing required by this permit, a test protocol, except as provided elsewhere in this permit, shall be submitted to:

Indiana Department of Environmental Management
Compliance and Enforcement Branch, Office of Air Quality
100 North Senate Avenue
MC 61-53 IGCN 1003
Indianapolis, Indiana 46204-2251

no later than thirty-five (35) days prior to the intended test date. The protocol submitted by the Permittee does not require a certification that meets the requirements of 326 IAC 2-7-6(1) by a "responsible official" as defined by 326 IAC 2-7-1(~~34~~**35**).

(b) The Permittee shall notify IDEM, OAQ of the actual test date at least fourteen (14) days prior to the actual test date. The notification submitted by the Permittee does not require a certification that meets the requirements of 326 IAC 2-7-6(1) by a "responsible official" as defined by 326 IAC 2-7-1(~~34~~**35**).

***

C.9 Compliance Monitoring [326 IAC 2-7-5(3)][326 IAC 2-7-6(1)]

**(a) For new units:**
**Unless otherwise specified in the approval for the new emission unit(s), compliance monitoring for new emission units shall be implemented on and after the date of initial start-up.**

**(b) For existing units:**
Unless otherwise specified in this permit, for all monitoring requirements not already legally required, the Permittee shall be allowed up to ninety (90) days from the date of permit issuance ~~or of initial start-up, whichever is later,~~ to begin such monitoring. If**,** due to circumstances beyond the Permittee's control, any monitoring equipment required by this permit cannot be installed and operated no later than ninety (90) days after permit issuance ~~or the date of initial startup, whichever is later~~, the Permittee may extend the compliance schedule related to the equipment for an additional ninety (90) days provided the Permittee notifies:

Indiana Department of Environmental Management
Compliance and Enforcement Branch, Office of Air Quality
100 North Senate Avenue
MC 61-53 IGCN 1003
Indianapolis, Indiana 46204-2251

in writing, prior to the end of the initial ninety (90) day compliance schedule, with full justification of the reasons for the inability to meet this date.

The notification which shall be submitted by the Permittee does require a certification that meets the requirements of 326 IAC 2-7-6(1) by a "responsible official" as defined by 326 IAC 2-7-1(~~34~~**35**).

~~Unless otherwise specified in the approval for the new emission unit(s), compliance monitoring for new emission units or emission units added through a source modification shall be implemented when operation begins.~~

~~C.10 Maintenance of Continuous Opacity Monitoring Equipment [326 IAC 2-7-5(3)(A)(iii)]~~

~~(a) The Permittee shall install, calibrate, maintain, and operate all necessary continuous opacity monitoring systems (COMS) and related equipment.~~

~~(b) All COMS shall meet the performance specifications of 40 CFR 60, Appendix B, Performance Specification No. 1, and are subject to monitor system certification requirements pursuant to 326 IAC 3-5.~~

~~(c) In the event that a breakdown of a COMS occurs, a record shall be made of the times and reasons of the breakdown and efforts made to correct the problem.~~

~~(d) Whenever a COMS is malfunctioning or is down for maintenance or repairs for a period of twenty-four (24) hours or more and a backup COMS is not online within twenty-four (24) hours of shutdown or malfunction of the primary COMS, the Permittee shall provide a certified opacity reader, who may be an employee of the Permittee or an independent contractor, to self-monitor the emissions from the emission unit stack.~~

~~(1) Visible emission readings shall be performed in accordance with 40 CFR 60, Appendix A, Method 9, for a minimum of five (5) consecutive six (6) minute averaging periods beginning not more than twenty-four (24) hours after the start of the malfunction or down time.~~

~~(2) Method 9 opacity readings shall be repeated for a minimum of five (5) consecutive six (6) minute averaging periods at least twice per day during daylight operations, with at least four (4) hours between each set of readings, until a COMS is online.~~

~~(3) Method 9 readings may be discontinued once a COMS is online.~~

~~(4) Any opacity exceedances determined by Method 9 readings shall be reported with the Quarterly Opacity Exceedances Reports.~~

~~(c) Nothing in this permit shall excuse the Permittee from complying with the requirements to operate a continuous opacity monitoring system pursuant to 326 IAC 3-5, (and 40 CFR 60 and/or 40 CFR 63).~~

~~C.11 Maintenance of Continuous Emission Monitoring Equipment [326 IAC 2-7-5(3)(A)(iii)]~~

~~(a) The Permittee shall install, calibrate, maintain, and operate all necessary continuous emission monitoring systems (CEMS) and related equipment.~~

~~(b) In the event that a breakdown of a continuous emission monitoring system occurs, a record shall be made of the times and reasons of the breakdown and efforts made to correct the problem.~~

~~(c) Whenever a continuous emission monitor other than an opacity monitor is malfunctioning or will be down for calibration, maintenance, or repairs for a period of four (4) hours or more, a calibrated backup CEMS shall be brought online within four (4) hours of shutdown of the primary CEMS, and shall be operated until such time as the primary CEMS is back in operation.~~

~~(d) Nothing in this permit shall excuse the Permittee from complying with the requirements to operate a continuous emission monitoring system pursuant to 40 CFR 63.1572 (b).~~

~~C.12 Monitoring Methods [326 IAC 3] [40 CFR 60] [40 CFR 63]~~

~~Any monitoring or testing required by Section D of this permit shall be performed according to the provisions of 326 IAC 3, 40 CFR 60, Appendix A, 40 CFR 60, Appendix B, 40 CFR 63, or other approved methods as specified in this permit.~~

C.~~13~~**10** Instrument Specifications [326 IAC 2-1.1-11] [326 IAC 2-7-5(3)] [326 IAC 2-7-6(1)]

(a) When required by any condition of this permit, an analog instrument used to measure a parameter related to the operation of an air pollution control device shall have a scale such that the expected maximum reading for the normal range shall be no less than twenty percent (20%) of full scale. **The analog instrument shall be capable of measuring values outside of the normal range.**

***

C.~~17~~**14** Actions Related to Noncompliance Demonstrated by a Stack Test [326 IAC 2-7-5][326 IAC 2-7-6]

***

The response action documents submitted pursuant to this condition do require a certification that meets the requirements of 326 IAC 2-7-6(1) by a "responsible official" as defined by 326 IAC 2-7-1(~~34~~**35**).

Record Keeping and Reporting Requirements [326 IAC 2-7-5(3)] [326 IAC 2-7-19]

C.~~18~~**15** Emission Statement [326 IAC 2-7-5(3)(C)(iii)][326 IAC 2-7-5(7)][326 IAC 2-7-19(c)][326 IAC 2-6]

Pursuant to 326 IAC 2-6-3(a)(1), the Permittee shall submit by July 1 of each year an emission statement covering the previous calendar year. The emission statement shall contain, at a minimum, the information specified in 326 IAC 2-6-4(c) and shall meet the following requirements:

(1) Indicate estimated actual emissions of all pollutants listed in 326 IAC 2-6-4(a);

(2) Indicate estimated actual emissions of regulated pollutants as defined by 326 IAC 2-7-1(~~32~~**33**) ("Regulated pollutant, which is used only for purposes of Section 19 of this rule") from the source, for purpose of fee assessment.

The statement must be submitted to:

Indiana Department of Environmental Management
Technical Support and Modeling Section, Office of Air Quality
100 North Senate Avenue
MC 61-50 IGCN 1003
Indianapolis, Indiana 46204-2251

The emission statement does require a certification that meets the requirements of 326 IAC 2-7-6(1) by a "responsible official" as defined by 326 IAC 2-7-1(~~34~~**35**).

C.~~19~~**16** General Record Keeping Requirements [326 IAC 2-7-5(3)] [326 IAC 2-7-6] **[326 IAC 2-2][326 IAC 2-3]**

(a) Records of all required monitoring data, reports and support information required by this permit shall be retained for a period of at least five (5) years from the date of monitoring sample, measurement, report, or application. **Support information includes the following, where applicable:**

**(AA) All calibration and maintenance records.**
**(BB) All original strip chart recordings for continuous monitoring instrumentation.**
**(CC) Copies of all reports required by the Part 70 permit.**

**Records of required monitoring information include the following, where applicable:**

**(AA) The date, place, as defined in this permit, and time of sampling or measurements.**
**(BB) The dates analyses were performed.**
**(CC) The company or entity that performed the analyses.**
**(DD) The analytical techniques or methods used.**
**(EE) The results of such analyses.**
**(FF) The operating conditions as existing at the time of sampling or measurement.**

**These records shall be physically present or electronically accessible at the source location for a minimum of three (3) years. The records may be stored elsewhere for the remaining two (2) years as long as they are available upon request. If the Commissioner makes a request for records to the Permittee, the Permittee shall furnish the records to the Commissioner within a reasonable time.**

(b) ***

**(c) If there is a reasonable possibility (as defined in 326 IAC 2-2-8 (b)(6)(A), 326 IAC 2-2-8 (b)(6)(B), 326 IAC 2-3-2 (l)(6)(A), and/or 326 IAC 2-3-2 (l)(6)(B)) that a "project" (as defined in 326 IAC 2-2-1(oo) and/or 326 IAC 2-3-1(jj)) at an existing emissions unit, other than projects at a source with a Plantwide Applicability Limitation (PAL), which is not part of a "major modification" (as defined in 326 IAC 2-2-1(dd) and/or**

**326 IAC 2-3-1(y)) may result in significant emissions increase and the Permittee elects to utilize the "projected actual emissions" (as defined in 326 IAC 2-2-1(pp) and/or 326 IAC 2-3-1(kk)), the Permittee shall comply with following:**

**(1) Before beginning actual construction of the "project" (as defined in 326 IAC 2-2-1(oo) and/or 326 IAC 2-3-1(jj)) at an existing emissions unit, document and maintain the following records:**

**(A) A description of the project.**

**(B) Identification of any emissions unit whose emissions of a regulated new source review pollutant could be affected by the project.**

**(C) A description of the applicability test used to determine that the project is not a major modification for any regulated NSR pollutant, including:**

**(i) Baseline actual emissions;**

**(ii) Projected actual emissions;**

**(iii) Amount of emissions excluded under section 326 IAC 2-2-1(pp)(2)(A)(iii) and/or 326 IAC 2-3-1 (kk)(2)(A)(iii); and**

**(iv) An explanation for why the amount was excluded, and any netting calculations, if applicable.**

**(d) If there is a reasonable possibility (as defined in 326 IAC 2-2-8 (b)(6)(A) and/or 326 IAC 2-3-2 (l)(6)(A)) that a "project" (as defined in 326 IAC 2-2-1(oo) and/or 326 IAC 2-3-1(jj)) at an existing emissions unit, other than projects at a source with a Plantwide Applicability Limitation (PAL), which is not part of a "major modification" (as defined in 326 IAC 2-2-1(dd) and/or 326 IAC 2-3-1(y)) may result in significant emissions increase and the Permittee elects to utilize the "projected actual emissions" (as defined in 326 IAC 2-2-1(pp) and/or 326 IAC 2-3-1(kk)), the Permittee shall comply with following:**

**(1) Monitor the emissions of any regulated NSR pollutant that could increase as a result of the project and that is emitted by any existing emissions unit identified in (1)(B) above; and**

**(2) Calculate and maintain a record of the annual emissions, in tons per year on a calendar year basis, for a period of five (5) years following resumption of regular operations after the change, or for a period of ten (10) years following resumption of regular operations after the change if the project increases the design capacity of or the potential to emit that regulated NSR pollutant at the emissions unit.**

C.~~20~~**17** General Reporting Requirements [326 IAC 2-7-5(3)(C)] [326 IAC 2-1.1-11] **[326 IAC 2-2][326 IAC 2-3]**

(a) The Permittee shall submit the attached Quarterly Deviation and Compliance Monitoring Report or its equivalent. **Proper notice submittal under Section B –Emergency Provisions satisfies the reporting requirements of this paragraph.** Any deviation from permit requirements, the date(s) of each deviation, the cause of the deviation, and the response steps taken must be reported except that a deviation required to be reported pursuant to an applicable requirement that exists independent of this permit, shall be reported according to the schedule stated in the applicable requirement and does not need to be included in this report. This report shall be submitted not later than thirty (30)

days after the end of the reporting period. The Quarterly Deviation and Compliance Monitoring Report shall include a certification that meets the requirements of 326 IAC 2-7-6(1) by a "responsible official" as defined by 326 IAC 2-7-1(~~34~~**35**). A deviation is an exceedance of a permit limitation or a failure to comply with a requirement of the permit.

***

**(e) If the Permittee is required to comply with the recordkeeping provisions of (d) in Section C - General Record Keeping Requirements for any "project" (as defined in 326 IAC 2-2-1 (oo) and/or 326 IAC 2-3-1 (jj)) at an existing emissions unit, and the project meets the following criteria, then the Permittee shall submit a report to IDEM, OAQ:**

**(1) The annual emissions, in tons per year, from the project identified in (c)(1) in Section C- General Record Keeping Requirements exceed the baseline actual emissions, as documented and maintained under Section C- General Record Keeping Requirements (c)(1)(C)(i), by a significant amount, as defined in 326 IAC 2-2-1 (ww) and/or 326 IAC 2-3-1 (pp), for that regulated NSR pollutant, and**

**(2) The emissions differ from the preconstruction projection as documented and maintained under Section C - General Record Keeping Requirements (c)(1)(C)(ii).**

**(f) The report for project at an existing emissions unit shall be submitted no later than sixty (60) days after the end of the year and contain the following:**

**(1) The name, address, and telephone number of the major stationary source.**

**(2) The annual emissions calculated in accordance with (d)(1) and (2) in Section C - General Record Keeping Requirements.**

**(3) The emissions calculated under the actual-to-projected actual test stated in 326 IAC 2-2-2(d)(3) and/or 326 IAC 2-3-2(c)(3).**

**(4) Any other information that the Permittee wishes to include in this report such as an explanation as to why the emissions differ from the preconstruction projection.**

**Reports required in this part shall be submitted to:**

**Indiana Department of Environmental Management**
**Compliance and Enforcement Branch, Office of Air Quality**
**100 North Senate Avenue**
**MC 61-53 IGCN 1003**
**Indianapolis, Indiana 46204-2251**

**(g) The Permittee shall make the information required to be documented and maintained in accordance with (c) in Section C- General Record Keeping Requirements available for review upon a request for inspection by IDEM, OAQ. The general public may request this information from the IDEM, OAQ under 326 IAC 17.1.**

***

## C.19 Consent Decree (Civil No. 3:13-CV-00030-RLY-WGH) Definitions

**As specified by the Consent Decree entered in Civil No. 3:13-CV-00030-RLY-WGH and pursuant to SSM No. 129-33810-00003, the following definitions shall apply to sections C.19**

**- Consent Decree (Civil No. 3:13-CV-00030-RLY-WGH) Definitions, C.20 - Consent Decree (Civil No. 3:13-CV-00030-RLY-WGH) Force Majeure, D.2.2 - Standards of Performance for Petroleum Refineries [326 IAC 12] [40 CFR 60, Subpart J] [326 IAC 2-7-10.5], D.2.3 - Standards of Performance for Petroleum Refineries [326 IAC 12] [40 CFR 60, Subpart Ja] [326 IAC 2-7-10.5], D.2.4 - Consent Decree (Civil No. 3:13-CV-00030-RLY-WGH) Requirements [326 IAC 2-7-10.5], D.2.5 - Consent Decree Requirements [326 IAC 2-7-10.5], D.2.7 - Continuous Emissions Monitoring [326 IAC 3-5] [326 IAC 2-7-6(1),(6)] [40 CFR 60, Subpart Ja], D.2.8 - Continuous Opacity Monitoring [326 IAC 3-5] [326 IAC 2-7-6(1),(6)] [40 CFR 60, Subpart Ja], D.5.5 - Consent Decree (Civil No. 3:13-CV-00030-RLY-WGH) Requirements, D.5.6 - Consent Decree Requirements [326 IAC 2-7-10.5], D.5.7- Consent Decree Requirements [326 IAC 2-7-10.5] – Main Flare, D.5.8 - Standards of Performance for Petroleum Refineries [326 IAC 12] [40 CFR 60, Subpart J] [40 CFR 60, Subpart Ja] [326 IAC 2-7-10.5], D.5.11 - NOx Limitation Averaging Time and Monitoring Requirements, D.5.12 - Continuous Emissions Monitoring [326 IAC 3-5] [326 IAC 2-7-6(1),(6)][40 CFR 60, Subpart Db], Section E.3 - 40 CFR Part 60, Subpart J, and E.12 - 40 CFR Part 60, Subpart Ja of the permit:**

**(a) "7-day rolling average" shall mean the average daily emission rate or concentration during the preceding 7 days. For purposes of clarity, the first day used in a 7-day rolling average compliance period is the first day on which the emissions limit is effective and the first complete 7-day average compliance period is 7 days later (*e.g.*, for a limit effective on January 1, the first day in the period is January 1 and the first complete 7-day period is January 1 through January 7).**

**(b) "365-day rolling average" shall mean the average daily emission rate or concentration during the preceding 365 days. For purposes of clarity, the first day used in a 365-day rolling average compliance period is the first day on which the emissions limit is effective and the first complete 365-day average compliance period is 365 days later (*e.g.*, for a limit effective on January 1, the first day in the period is January 1 and the first complete 365-day period is January 1 through December 31).**

**(c) "12-month rolling average" shall mean the sum of the average rate or concentration of the pollutant in question for the most recent complete calendar month and each of the previous 11 calendar months, divided by 12. A new 12-month rolling average shall be calculated for each new complete month. For purposes of clarity, the first month used in a 12-month rolling average compliance period is the first full calendar month in which the emission limits is effective, and the first complete 12-month rolling average compliance period is 12 calendar months later (*e.g.*, for a limit effective on December 31, the first month in the period is January and the first complete 12-month period is January through the following December).**

**(d) "Calendar Quarter" shall mean any one of the three month periods ending on March 31st, June 30th, September 30th, and December 31st.**

**(e) "CEMS" shall mean a continuous emissions monitoring system.**

**(f) "CO" shall mean carbon monoxide.**

**(g) "Combustion Units" shall mean the heaters and boilers at the Refinery that are listed in Appendix A.**

**(h) "Consent Decree" or "Decree" or "CD" shall mean the Consent Decree entered in Civil No. 3:13-CV-00030-RLY-WGH, including any and all Appendices attached to the body of the Consent Decree.**

**(i) "Co-Plaintiff" or "Indiana" shall mean the State of Indiana on behalf of the Indiana Department of Environmental Management.**

**(j) "CountryMark" shall mean Countrymark Refining and Logistics, LLC, and its successors and assigns.**

**(k) "Covered Flare" shall mean the Main Flare at the Refinery; the Main Flare is an Elevated, Steam-Assisted Flare utilizing only Upper Steam.**

**(l) "Current Generation Ultra-Low NOx Burners" shall mean those burners that are designed to achieve a NOx emission rate of 0.020 to 0.040 lb NOx/mmBTU (HHV) when firing natural gas at 3% stack oxygen at full design load without air preheat, even if upon installation actual emissions exceed 0.040 lb NOx/mmBTU (HHV).**

**(m) "Date of Entry of the Consent Decree" or "Date of Entry" shall mean the date the Consent Decree is entered by the United States District Court for the Southern District of Indiana.**

**(n) "Date of Lodging of the Consent Decree" or "Date of Lodging" or "DOL" shall mean the date the Consent Decree is filed for lodging with the Clerk of the Court for the United States District Court for the Southern District of Indiana.**

**(o) "Day" or "Days" as used herein shall mean a calendar day or days.**

**(p) "EPA" shall mean the United States Environmental Protection Agency and any of its successors departments or agencies.**

**(q) "FCCU" shall mean the fluidized catalytic cracking unit and its regenerator that CountryMark owns and/or operates at the Mt. Vernon Refinery.**

**(r) "Flare" shall mean a combustion device that uses an uncontrolled volume of ambient air to burn gases.**

**(s) "Fuel Oil" shall mean any liquid fossil fuel with a sulfur content of greater than 0.05% by weight.**

**(t) "IDEM" shall mean the Indiana Department of Environmental Management and any successor departments or agencies of the State of Indiana.**

**(u) "Malfunction" shall mean, as specified in 40 C.F.R. Part 60.2, "any sudden, infrequent, and not reasonably preventable failure of air pollution control equipment, process equipment, or a process to operate in a normal or usual manner. Failures that are caused in part by poor maintenance or careless operation are not Malfunctions."**

**(v) "Month":**

**(1) Whenever the Consent Decree requires compliance "within" or "by no later than" a certain number of "Months" after a specific date or event, the compliance obligation commences on the anniversary of the numerical date of that specific date or event. For example, if compliance is required by no later than six Months after the Effective Date of the Decree, and if the Effective Date of the Decree is December 6, 2012, then the compliance obligation commences on June 6, 2013.**

**(2) "Month" or "monthly" for any purpose other than that identified in Subparagraph 10.t.i of the Consent Decree entered in Civil No. 3:13-CV-00030-RLY-WGH shall mean calendar month.**

**(w) "Natural Gas Curtailment" shall mean a restriction imposed by a natural gas supplier limiting CountryMark's ability to obtain or use natural gas.**

**(x) "Next Generation Ultra-Low NOx Burners" or "Next Generation ULNBs" shall mean those burners that are designed to achieve a NOx emission rate of less than or equal to 0.020 lb NOx/mmBTU (HHV) when firing natural gas at 3% stack oxygen at full design load without air preheat, even if upon installation actual emissions exceed 0.020 lb NOx/mmBTU(HHV).**

**(y) "NOx" shall mean nitrogen oxides.**

**(z) "Paragraph" shall mean a portion of the Consent Decree identified by an Arabic numeral.**

**(aa) "Parties" shall mean the United States, Indiana, and CountryMark.**

**(bb) "PM" shall mean particulate matter as measured by 40 CFR Part 60, Appendix A, Method 5B or 5F.**

**(cc) "Refinery" or "Mt. Vernon Refinery" shall mean the Refinery owned and operated by CountryMark in Mt. Vernon, Indiana, which is subject to the requirements of the Consent Decree.**

**(dd) "Selective Catalytic Reduction" or "SCR" shall mean an air pollution control device consisting of ammonia injection and a catalyst bed to selectively catalyze the reduction of NOx with ammonia to nitrogen and water.**

**(ee) "Selective Non-Catalytic Reduction" or "SNCR" shall mean an air pollution control device consisting of a reactant injection system using ammonia or urea to selectively reduce NOx to nitrogen and water and may include an enhanced reactant such as hydrogen.**

**(ff) "Shutdown," as specified in 40 C.F.R. Section 60.2, shall mean the cessation of operation of an affected facility for any purpose.**

**(gg) "SO2" shall mean sulfur dioxide.**

**(hh) "Smoke Emissions" shall have the definition set forth in Section 3.5 of Method 22 of 40 C.F.R. Part 60, Appendix A. Smoke Emissions may be documented by either a person certified pursuant to Method 22 or by a video camera.**

**(ii) "Startup," as specified in 40 C.F.R. Section 60.2, shall mean the setting in operation of an affected facility for any purpose.**

**(jj) "Sulfur Flare" shall mean the Elevated Flare associated with the Sulfur Recovery Unit at the Refinery that CountryMark designates as 520-H-163.**

**(kk) "Sulfur Recovery Plant" or "SRP" shall mean a process unit that recovers sulfur from hydrogen sulfide by a vapor phase catalytic reaction of sulfur dioxide and hydrogen sulfide.**

**(ll) "Sulfur Recovery Unit" or "SRU" shall mean a single component of a Sulfur Recovery Plant, commonly referred to as a Claus train.**

**(mm) "Tail Gas" shall mean exhaust gas from the Claus trains and the tail gas unit ("TGU") section of the SRP.**

**(nn) "Tail Gas Unit" or "TGU" shall mean a control system utilizing a technology for reducing emissions of sulfur compounds from a Sulfur Recovery Plant.**

**(oo) "Torch Oil" shall mean FCCU feedstock or cycle oils that are combusted in the FCC regenerator to assist in starting up or restarting the FCCU, to allow hot standby of the FCCU, or to maintain regenerator heat balance in the FCCU.**

**(pp) "Upstream Process Units" shall mean all amine contactors, amine regenerators, and sour water strippers at the Refinery, as well as all process units at the Refinery that produce gaseous or aqueous waste streams that are processed at amine contactors, amine scrubbers, or sour water strippers.**

**(qq) "Visible Emissions" for the flares shall mean five minutes or more of Smoke Emissions during any two consecutive hours. For purposes of Appendix B of the Consent Decree, Visible Emissions may be documented by either a person certified pursuant to Method 22 or by a video camera.**

**C.20 Consent Decree (Civil No. 3:13-CV-00030-RLY-WGH) Force Majeure**

**(a) "Force Majeure," for purposes of the Consent Decree, is defined as any event beyond the control of CountryMark, its contractors, or any entity controlled by CountryMark that delays the performance of any obligation under the Consent Decree despite CountryMark's best efforts to fulfill the obligation. The requirement that CountryMark exercise "best efforts to fulfill the obligation" includes using best efforts to anticipate any potential Force Majeure event and best efforts: (a) to address the effects of any such event as it is occurring; and (b) to prevent or minimize any resulting delay after the event has occurred.**

**(b) "Force Majeure" does not include CountryMark's financial inability to perform any obligation under the Consent Decree. Unanticipated or increased costs or expenses associated with the performance of CountryMark's obligations under the Consent Decree shall not constitute circumstances beyond CountryMark's control nor serve as the basis for an extension of time under this Section XIII of the Consent Decree.**

**(c) If any event occurs or has occurred that may delay the performance of any obligation under the Consent Decree, whether or not caused by a Force Majeure event, CountryMark shall notify EPA and IDEM in writing not later than fifteen (15) calendar days after the time CountryMark first knew or should have known by the exercise of due diligence that the event might cause a delay. In the written notice, CountryMark shall specifically reference Consent Decree Paragraph 169 of the Consent Decree and shall provide an explanation and description of the reasons for the delay; the anticipated duration of the delay; all actions taken or to be taken to prevent or minimize the delay; a schedule for implementation of any measures to be taken to prevent or mitigate the delay or the effect of the delay; CountryMark's rationale for attributing such delay to a Force Majeure event if it intends to assert such a claim; and a statement as to whether, in the opinion of CountryMark, such event may cause or contribute to an endangerment to public health, welfare, or the environment. CountryMark shall be deemed to know of any circumstance of which CountryMark, any entity controlled by CountryMark, or CountryMark's contractors knew or should have known. CountryMark shall include with any notice all available documentation supporting the claim that the delay was attributable to a Force Majeure. The written notice required by this condition shall be effective upon the mailing of the same by overnight mail or by certified mail, return receipt requested, to EPA in the manner set forth in Section XI of the Consent Decree (Notices).**

**(d) Failure by CountryMark to comply with the requirements in Consent Decree Paragraph 169 shall preclude CountryMark from asserting any claim of Force**

**Majeure for the event for the period of time of such failure to comply, and for any additional delay caused by such failure.**

**(e) If EPA, after consultation with IDEM, agrees that the delay or anticipated delay is attributable to a Force Majeure event, the time for performance of the obligations under the Consent Decree and the corresponding Part 70 permit condition that are affected by the Force Majeure event will be extended by EPA for such time as is necessary to complete those obligations. An extension of the time for performance of the obligations affected by the Force Majeure event shall not, of itself, extend the time for performance of any other obligation. EPA will notify CountryMark in writing of the length of the extension, if any, for performance of the obligations affected by the Force Majeure event.**

**(f) If EPA, after consultation with IDEM, does not agree that the delay or anticipated delay has been or will be caused by a Force Majeure event, or if the EPA, after consultation with IDEM, and CountryMark fail to agree on the length of the delay attributable to the Force Majeure event, EPA will notify CountryMark of its decision.**

**(g) If CountryMark elects to invoke the dispute resolution procedures set forth in Consent Decree Section XIV (Dispute Resolution), it shall do so no later than 45 days after receipt of EPA's notice. In any such proceeding, CountryMark shall have the burden of demonstrating by a preponderance of the evidence that the delay or anticipated delay has been or will be caused by a Force Majeure event, that the duration of the delay or the extension sought was or will be warranted under the circumstances, that best efforts were exercised to avoid and mitigate the effects of the delay, and that CountryMark complied with the requirements of Consent Decree Paragraphs 167 and 169. If CountryMark carries this burden, the delay at issue shall be deemed not to be a violation by CountryMark of the affected obligation of this Consent Decree identified to EPA and the Court.**

**(h) Notwithstanding any other provision of the Consent Decree, the Parties do not intend that CountryMark's serving of a Force Majeure notice or the Parties' inability to reach agreement shall cause the reviewing Court to draw any inferences nor establish any presumptions adverse to any Party.**

SECTION D.1 EMISSIONS UNIT OPERATION CONDITIONS

~~Facility Description [326 IAC 2-7-5(15)]:~~**Emission Unit Description:**

***

D.1.1 Preventive Maintenance Plan [326 IAC 2-7-5(~~13~~**12**)]

***

SECTION D.2 FACILITY OPERATION CONDITIONS

~~Facility Description [326 IAC 2-7-5(15)]:~~**Emission Unit Description:**

(c) One (1) FCCU regenerator, identified as 500V-5 with an average throughput rate of 380 barrels fresh feed per hour, installed in 1950, controlled by a cyclone and exhausting to stack 10; Under 40 CFR 63, Subpart UUU, process vents on the FCCU are considered affected sources at a petroleum refinery. **Under 40 CFR 60, Subpart J, the 500V-5 is considered an affected facility by the Consent Decree as of "Date of Entry" for $SO_2$ and CO.**

(s) One (1) CCR Platformer Unit which includes one (1) CCR Platformer Heater, identified as 300 - H1, H2, H3 with a maximum heat input rate of 70.3 mmBtu/hr, combusting refinery fuel gas,

installed in 1992 and exhausting to stack 74. Under 40 CFR 63, Subpart UUU, process vents on the CCR are considered affected sources at a petroleum refinery. **Under 40 CFR 60, Subpart J, the CCR Platformer Unit, is considered an affected facility. Under 40 CFR 63, Subpart DDDDD, the CCR is considered an affected facility.**

(jj) One (1) Hydrotreating Unit Reactor charge heater**, identified as** ~~(~~210-H-100~~), identified as 122~~, with a maximum heat input rating of 19.25 MMBtu per hour, combusting refinery fuel gas as a primary fuel and natural gas as a back up fuel, and exhausting through one (1) stack identified as 122, constructed in 2005. **Under 40 CFR 60, Subpart J, the Hydrotreating Unit Reactor charge heater, is considered an affected facility. Under 40 CFR 63, Subpart DDDDD, the Hydrotreating Unit Reactor charge heater is considered an affected facility.**

(kk) One (1) Hydrotreating Unit Reboiler Stabilizer**, identified as** ~~(~~210-H-101~~), identified as 123~~, with a maximum heat input rating of 19.94 MMBtu per hour, combusting refinery fuel gas as a primary fuel and natural gas as a back up fuel, and exhausting through one (1) stack identified as 123 constructed in 2005. **Under 40 CFR 60, Subpart J, the Hydrotreating Unit Reboiler Stabilizer, is considered an affected facility. Under 40 CFR 63, Subpart DDDDD, the Hydrotreating Unit Reboiler Stabilizer is considered an affected facility.**

(ll) One (1) Tail Gas Treatment System and Sulfur Recovery System identified as 124 and consisting of the following: Under 40 CFR 63, Subpart UUU, these facilities and the associated process vents and bypass lines are considered affected sources at a petroleum refinery. **Under 40 CFR 60, Subpart Ja, the Tail Gas Treatment System and Sulfur Recovery System, is considered an affected facility by the Consent Decree as of June 3, 2013.**

(1) One (1) Claus Unit Startup burner (SRU Burner 520-H-101), identified as 124-1, with a maximum heat input rating of 1.54 MMBtu per hour, combusting natural gas, and exhausting through one (1) stack identified as 124-1, constructed in 2005. **Under 40 CFR 60, Subpart J, the Claus Unit Startup burner, is considered an affected facility. Under 40 CFR 63, Subpart DDDDD, the Claus Unit Startup burner is considered an affected facility.**

(2) One (1) Tail Gas Treating Unit (TGTU) Incinerator burner (Claus~~e~~ Furnace 520-H-102), identified as 124-2, with a maximum heat input rating of 1.29 MMBtu per hour, combusting refinery fuel gas as a primary fuel and natural as a back fuel, and exhausting through one (1) stack identified as 124-2, constructed in 2005. In the event of unscheduled shutdown of the CCR unit, the Sulfur Recovery Unit effluent will be routed directly to the TGTU incinerator. **Under 40 CFR 60, Subpart J, the Tail Gas Treating Unit (TGTU) Incinerator burner, is considered an affected facility. Under 40 CFR 63, Subpart DDDDD, the Tail Gas Treating Unit (TGTU) Incinerator burner is considered an affected facility.**

(3) One (1) Tail Gas Treating Unit (TGTU) Incinerator (520-H-162), identified as 124-3, with a maximum process flow rate of 48,000 dry standard cubic feet per day, and exhausting through one (1) stack identified as 124-3, constructed in 2005.

(4) One (1) Sour Flare (520-H-163), identified as 124-4, with a maximum burner capacity of 0.92 MMBtu per hour, and a maximum process flow rate of 200 standard cubic feet per hour, and exhausting through one (1) stack identified as 124-4, constructed in 2005. **Under 40 CFR 60, Subpart J, the Sour Flare, is considered an affected facility by the Consent Decree as of March 31, 2013.**

(nn) One (1) Vacuum heater, identified as 200-H6, with a maximum heat input rate of 5.49 mmBtu/hr, combusting refinery fuel gas and natural gas as a backup, installed in 2005 and exhausting to stack 126. **Under 40 CFR 63, Subpart DDDDD, the Vacuum heater is considered an affected facility.**

(pp) One (1) Low Sulfur Gasoline (LSG) Unit consisting of the following equipment:

(1) LSG Reactor Charge Heater**, identified as** ~~(~~810-H101~~)~~**,** approved for construction in 2008, with a maximum capacity of 5.985 MMBtu, combusting refinery fuel gas only, and venting to stack 128. Under 40 CFR Part 60, Subpart Ja, the LSG Reactor Charge Heater is considered an affected facility. **Under 40 CFR 63, Subpart DDDDD, the LSG Reactor Charge Heater is considered an affected facility.**

***

***

**D.2.2 Standards of Performance for Petroleum Refineries [326 IAC 12] [40 CFR 60, Subpart J] [326 IAC 2-7-10.5]**

**As required by Paragraph 17 and B.38 of the Consent Decree in Civil No. 3:13-CV-00030-RLY-WGH and pursuant to SSM No. 129-33810-00003:**

**(a) By no later than the "Date of Entry" of the Consent Decree in Civil No. 3:13-CV-00030-RLY-WGH, the FCCU catalyst regenerator shall be an affected facility as that term is used in 40 CFR 60, Subparts A and J, and shall be subject to and comply with the requirements of 40 CFR 60, Subparts A and J and specified in Section E.3 for $SO_2$, and CO applicable to the FCCU. Entry of the Consent Decree in Civil No. 3:13-CV-00030-RLY-WGH and compliance with the relevant monitoring requirements of Civil 3:13-CV-00030-RLY-WGH for the FCCU shall satisfy the notice requirements of 40 CFR 60.7(a) and the initial performance test requirement of 40 CFR 60.8(a).**

**(b) By no later than March 31, 2013, the Sulfur Flare shall be an "affected facility" as that term is used in the NSPS at Subparts A and J, and shall be subject to and comply with the requirements of Subparts A and J, including all monitoring, recordkeeping, reporting and operating requirements. Consistent with language in 40 C.F.R. § 60.104(a)(1) at the time of the Lodging of this Decree, the combustion in the Sulfur Flare of process upset gases or fuel gas that is released to the Sulfur Flare as a result of relief valve leakage or other emergency malfunctions is exempt from the emissions limit in 40 C.F.R. § 60.104(a)(1). To the extent that the exemption in 40 C.F.R. § 60.104(a)(1) identified in the preceding sentence is amended at any time during the duration of this Consent Decree, the amended language shall apply and not the language in the preceding sentence. In lieu of a monitoring by means of a CEMS, CountryMark, prior to the Lodging of this Consent Decree, submitted an Alternative Monitoring Plan to EPA Region 5 for approval. EPA approved the AMP.**

**D.2.3 Standards of Peformance for Petroleum Refineries [326 IAC 12] [40 CFR 60, Subpart Ja] [326 IAC 2-7-10.5]**

**As required by Paragraphs 39, 40, 41, and 43 of the Consent Decree entered in Civil No. 3:13-CV-00030-RLY-WGH and pursuant to SSM No. 129-33810-00003:**

**(a) By no later than June 30, 2013, the Sulfur Recovery Plant shall be an "affected facility" as that term is used in 40 CFR 60, Subparts A and Ja, for all pollutants applicable to SRPs, and shall be subject to and comply with the requirements of Subparts A and Ja, including all monitoring, recordkeeping, reporting, and operating requirements. Entry of the Consent Decree in Civil No. 3:13-CV-00030-RLY-WGH and compliance with the relevant monitoring requirements of Civil 3:13-CV-00030-RLY-WGH for the SRP shall satisfy the notice requirements of 40 CFR 60.7(a) and the initial performance test requirement of 40 CFR 60.8(a).**

**(b)** **At all times on and after the date of NSPS applicability for the SRP, the Permittee shall, for all periods of operation of the SRP, comply with 40 CFR § 60.102a(f)(2)(i), except during periods of Startup, Shutdown or Malfunction of the SRP or Malfunction of the Tail Gas Unit.**

**(c)** **At all times on and after the date of NSPS applicability for the SRP, including periods of Startup, Shutdown, and Malfunction, the Permittee shall, to the extent practicable, operate and maintain the SRP and associated air pollution control equipment in a manner consistent with good air pollution control practices for minimizing emissions as required by 40 CFR § 60.11(d).**

**(d)** **By no later than the "Date of Entry" of the Consent Decree in Civil No. 3:13-CV-00030-RLY-WGH, the Permittee shall, for the SRP monitor all Tail Gas emission points (stacks) to the atmosphere and install and operate an NSPS-compliant CEMS in accordance with NSPS Subpart Ja.**

**D.2.4 Consent Decree (Civil No. 3:13-CV-00030-RLY-WGH) Requirements [326 IAC 2-7-10.5]**

**As required by Paragraphs 11, 12, 14, 15, 21, and 42 of the Consent Decree in Civil No. 3:13-CV-00030-RLY-WGH and pursuant to SSM No. 129-33810-00003:**

**(a)** **By no later than the "Date of Entry" of the Consent Decree in Civil No. 3:13-CV-00030-RLY-WGH, the emissions of $NO_X$ from the FCCU shall not exceed 30 ppmvd @ 0% $O_2$ based on a "365-day rolling average" and 50 ppmvd $NO_X$ @ 0% $O_2$ based on a "7-day rolling average".**

**(b)** **$NO_X$ emissions during periods of Startup, Shutdown, or Malfunction of the FCCU or during periods of Malfunction of the FCCU's catalyst additive system shall not be used in determining compliance with the "7-day rolling average" $NO_X$ emission limits required by the Consent Decree in Civil No. 3:13-CV-00030-RLY-WGH at the FCCU, provided that during such periods the Permittee implements good air pollution control practices as required by 40 CFR 60.11(d) to minimize $NO_X$ emissions at the FCCU.**

**$NO_X$ emissions during periods of Startup, Shutdown, or Malfunction shall be used in determining compliance with the "365-day rolling average" $NO_X$ emission limits required by the Consent Decree in Civil No. 3:13-CV-00030-RLY-WGH at the FCCU.**

**(c)** **By no later than the "Date of Entry" of the Consent Decree in Civil No. 3:13-CV-00030-RLY-WGH, the emissions of $SO_2$ from the FCCU shall not exceed 25 ppmvd @ 0% O2 based on a "365-day rolling average" and 50 ppmvd @ 0% O2 based on a "7-day rolling average".**

**(d)** **$SO_2$ emissions during periods of Startup, Shutdown, or Malfunction shall not be used in determining compliance with the "7-day rolling average" $SO_2$ emission limits at the FCCU, provided that during such periods the Permittee implements good air pollution control practices as required by 40 CFR 60.11(d) to minimize $SO_2$ emissions at the FCCU.**

**$SO_2$ emissions during periods of Startup, Shutdown, or Malfunction shall be used in determining compliance with the "365-day rolling average" $SO_2$ emission limits required by the Consent Decree in Civil No. 3:13-CV-00030-RLY-WGH at the FCCU.**

**(e)** **By no later than the "Date of Entry" of the Consent Decree in Civil No. 3:13-CV-00030-RLY-WGH, the emissions of CO from the FCCU shall not exceed 500 ppmvd on a 1-hour average basis corrected to 0% O2.**

**(f)** **CO emissions during periods of Startup, Shutdown, or Malfunction shall not be used in determining compliance with the 1-hour 500 ppmvd emission limit,**

**provided that during such periods the Permittee implements good air pollution control practices to minimize CO emissions from the FCCU.**

**(g) By no later than the "Date of Entry" of the Consent Decree in Civil No. 3:13-CV-00030-RLY-WGH, the Permittee shall for the SRP either eliminate, control, and/or include and monitor as part of a the SRP's emissions, all sulfur tank emissions.**

**D.2.5 Consent Decree Requirements [326 IAC 2-7-10.5]**

**As required by Paragraph 38 of the Consent Decree in Civil No. 3:13-CV-00030-RLY-WGH and pursuant to SSM No. 129-33810-00003:**

**(a) By no later than the "Date of Entry" of the Consent Decree in Civil No. 3:13-CV-00030-RLY-WGH, the Permittee shall not burn Fuel Oil in any existing combustion device except during periods of Natural Gas Curtailment, Test Runs, or operator training. Nothing in this prohibition limits the Permittee's ability to burn Torch Oil in an FCCU regenerator to assist in starting, restarting, maintaining hot standby, or maintaining regenerator heat balance.**

**(b) After the "Date of Lodging" of the Consent Decree in Civil No. 3:13-CV-00030-RLY-WGH, the Permittee shall not construct any new combustion device that burns Fuel Oil unless the air pollution control equipment controlling the combustion device either:**

**(1) has an SO2 control efficiency of 90% or greater; or**

**(2) achieves an SO2 concentration of 20 ppm or less at 0% O2 on a 3-hour rolling average basis.**

**Nothing in this Condition exempts the Permittee from securing all necessary permits before constructing a new combustion device.**

D.2.~~2~~**6** Preventive Maintenance Plan [326 IAC 2-7-5(~~13~~**12**)]

A Preventive Maintenance Plan is required for the CCR platformer heater, identified as 300 - H1, H2, H3, FCCU regenerator, identified as 500V-5, Hydrotreater Unit Reactor Charge heater ~~(122)~~ **identified as 210-H-100**, Hydrotreater Unit Stabilizer Reboiler Heater ~~(123)~~ **identified as 210-H-101**, Low Sulfur Gasoline Unit (LSG) **identified as 810-H-101**, and Gas Treatment System & Sulfur Recovery System consisting of TGTU Incinerator Burner (124-2) and their control devices. Section B - Preventive Maintenance Plan contains the Permittee's obligation with regard to the preventive maintenance plan required by this condition.

**Compliance Determination Requirements**

**D.2.7 Continuous Emissions Monitoring [326 IAC 3-5] [326 IAC 2-7-6(1),(6)] [40 CFR 60, Subpart Ja]**

**(a) As required by Paragraphs 16, 23, and 13 of the Consent Decree in Civil No. 3:13-CV-00030-RLY-WGH and pursuant to SSM No. 129-33810-00003, by no later than the "Date of Entry" of the Consent Decree in Civil No. 3:13-CV-00030-RLY-WGH, the Permittee shall use $NO_X$, $SO_2$, CO, and $O_2$ CEMS to demonstrate compliance with the $NO_X$, CO, and $SO_2$ limits in Condition D.2.3 and D.2.4. The Permittee shall install, certify, calibrate, maintain and operate the $NO_X$, $SO_2$, CO and $O_2$ CEMS for the FCCU in accordance with the provisions of 40 CFR 60.13 that are applicable to CEMS (excluding those provisions applicable only to Continuous Opacity Monitoring Systems) and Part 60 Appendices A and F, and the applicable performance specification test of 40 CFR Part 60 Appendix B. However, unless Appendix F is required by the NSPS, state law or regulation, or a permit or approval, in lieu of the requirements of 40 CFR Appendix F 5.1.1, 5.1.3, and 5.1.4, the Permittee may conduct: (1) either a Relative Accuracy Audit (RAA) or a Relative Accuracy Test Audit (RATA) once every three years: and (2) a Cylinder Gas Audit**

**(CGA) each calendar quarter in which a RAA or RATA is not performed. If the CEMS must be moved because of the installation of control equipment, the Permittee shall promptly reinstall, re-calibrate, and re-certify the CEMS.**

**(b) Pursuant to 326 IAC 3-5 (Continuous Monitoring of Emissions) continuous emission monitoring systems for SRP shall be calibrated, maintained, and operated for measuring $SO_2$ and $O_2$, which meet all applicable performance specifications of 326 IAC 3-5-2.**

**(c) Pursuant to 326 IAC 3-5 (Continuous Monitoring of Emissions) continuous emission monitoring systems for FCCU shall be calibrated, maintained, and operated for measuring NOx, $SO_2$, CO, and $O_2$, which meet all applicable performance specifications of 326 IAC 3-5-2.**

**(c) All continuous emissions monitoring systems are subject to monitor system certification requirements pursuant to 326 IAC 3-5-3.**

**(d) Nothing in this permit shall excuse the Permittee from complying with the requirements to operate a continuous emission monitoring system pursuant to 326 IAC 3-5 and 40 CFR 60, Subpart Ja.**

**D.2.8 Continuous Opacity Monitoring [326 IAC 3-5] [326 IAC 2-7-6(1),(6)] [40 CFR 60, Subpart Ja]**

**(a) As required by Paragraph 24 of the Consent Decree in Civil No. 3:13-CV-00030-RLY-WGH and pursuant to SSM No. 129-33810-00003, by no later than the "Date of Entry" of the Consent Decree in Civil No. 3:13-CV-00030-RLY-WGH, the Permittee shall use the Continuous Opacity Monitoring System (COMS) to demonstrate compliance with the NSPS opacity limit at 40 CFR Part 60.102(a)(2). The Permittee shall install, certify, calibrate, maintain and operate the COMS for the FCCU in accordance with 40 CFR Part 60.11, 60.13 and Part 60, Appendix A, and the applicable performance specification test of 40 CFR Part 60, Appendix B.**

**(b) The Permittee shall calibrate, certify, operate, and maintain a continuous monitoring system and related equipment to measure opacity from the FCCU stack in accordance with 326 IAC 3-5-2 and 326 IAC 3-5-3.**

**(c) The Permittee shall record the output of the continuous monitoring system(s) and shall perform the required record keeping and reporting, pursuant to 326 IAC 3-5-6 and 326 IAC 3-5-7.**

**(d) Nothing in this permit shall excuse the Permittee from complying with the requirements to operate a continuous emission monitoring system pursuant to 326 IAC 3-5 and 40 CFR 60, Subpart Ja.**

**Compliance Monitoring Requirements [326 IAC 2-5.1-3(e)(2)] [ 326 IAC 2-6.1-5(a)(2)]**

**D.2.9 $NO_X$, $SO_2$, CO and $O_2$ Continuous Emissions Monitoring (CEMS) Equipment Downtime**

**In the event that a breakdown of a $NO_X$, $SO_2$, CO and $O_2$ continuous emissions monitoring system (CEMS) occurs, a record shall be made of the time and reason of the breakdown and efforts made to correct the problem.**

**D.2.10 Maintenance of COMS [326 IAC 2-7-5(3)(A)(iii)] [326 IAC 3-5]**

**The Permittee shall comply with the following:**

**(a) The COMS shall meet the performance specifications of 40 CFR 60, Appendix B, Performance Specification No. 1, and are subject to monitor system certification requirements pursuant to 326 IAC 3-5.**

**(b) In the event that a breakdown of the COMS occurs, a record shall be made of the time and reason of the breakdown and efforts made to correct the problem.**

**(c) Whenever the COMS is malfunctioning or down for maintenance, or repairs for more than twenty-four (24) hours during FCCU operation, the Permittee shall provide a certified opacity reader to take visible emission readings from the FCCU stack.**

**(1) Visible emission readings shall be performed in accordance with 40 CFR 60, Appendix A, Method 9, for a minimum of five (5) consecutive six (6) minute averaging periods beginning not more than twenty-four (24) hours after the start of the COMS malfunction or down time.**

**(2) Method 9 opacity readings shall be repeated for a minimum of five (5) consecutive six (6) minute averaging periods at least once per day during daylight operations, until the COMS is placed back in service.**

**(3) Method 9 readings may be discontinued once a COM is online.**

**(4) If abnormal emissions are observed, the Permittee shall take a reasonable response. Observation of abnormal emissions that do not violate an applicable opacity limit is not a deviation from this permit. Failure to take response steps shall be considered a deviation from this permit. Section C – Response to Excursions or Exceedances contains the Permittee's obligations with regard to the reasonable response steps required by this condition.**

**(5) Any opacity exceedances determined by Method 9 readings shall be reported with the Quarterly Opacity Exceedances Reports.**

**Record Keeping and Reporting Requirements [326 IAC 2-7-5(3)] [326 IAC 2-7-19]**

**D.2.11 Record Keeping Requirements [326 IAC 2-7-5(3)(A)(iii)] [326 IAC 3-5]**

**(a) The Permittee shall record the output of the continuous monitoring systems ppmvd and shall perform the required record keeping pursuant to 326 IAC 3-5-6 and 326 IAC 3-5-7.**

**(b) In the event that a breakdown of the $NO_X$, $SO_2$, CO or $O_2$ continuous emission monitoring systems (CEMS) occurs, the Permittee shall maintain records of all CEMS malfunctions, out of control periods, calibration and adjustment activities, and repair or maintenance activities.**

**(c) To document the compliance status with opacity Conditions D.2.8 and D.2.10, the Permittee shall maintain records in accordance with (1) through (4) below. Records shall be complete and sufficient to establish compliance with the limits in Conditions D.2.2 and D.2.3.**

**(1) Data and results from the most recent stack test.**

**(2) All continuous opacity monitoring data, pursuant to 326 IAC 3-5-6.**

**(3) The results of all Method 9 visible emission readings taken during any periods of COM downtime.**

**(4) All multiclone and baghouse parametric monitoring readings.**

**(d) Section C - General Record Keeping Requirements, of this permit contains the Permittee's obligation with regard to the records required by this condition.**

**D.2.12 Reporting Requirements [326 IAC 2-7-5(3)(A)(iii)] [326 IAC 3-5]**

**(a) The Permittee shall prepare and submit to IDEM, OAQ a written report of the results of the calibration gas audits and relative accuracy test audits for each calendar quarter within thirty (30) calendar days after the end of each quarter. The report must contain the information required by 326 IAC 3-5-5(e)(2).**

**The report submitted by the Permittee does require the certification by the "responsible official" as defined by 326 IAC 2-7-1(35).**

**(b) Pursuant to 326 IAC 3-5-7(5), reporting of continuous monitoring system instrument downtime, except for zero (0) and span checks, which shall be reported separately, shall include the following:**

**(1) date of downtime;**

**(2) time of commencement;**

**(3) duration of each downtime;**

**(4) reasons for each downtime; and**

**(5) nature of system repairs and adjustments.**

**The report submitted by the Permittee does require the certification by the "responsible official" as defined by 326 IAC 2-7-1(35).**

**(c) A quarterly report of opacity exceedances shall be submitted to the address listed in Section C - General Reporting Requirements, of this permit, within thirty (30) days after the end of the quarter being reported. The report submitted by the Permittee does require the certification by the "responsible official" as defined by 326 IAC 2-7-1(35).**

SECTION D.3 FACILITY OPERATION CONDITIONS

~~Facility Description [326 IAC 2-7-5(15)]:~~**Emission Unit Description:**

***

D.3.2 Preventive Maintenance Plan [326 IAC 2-7-5(~~13~~**12**)]

***

SECTION D.4 FACILITY OPERATION CONDITIONS

~~Facility Description [326 IAC 2-7-5(15)]:~~**Emission Unit Description:**

***

D.4.1 Preventive Maintenance Plan [326 IAC 2-7-5(~~13~~**12**)]

***

SECTION D.5 FACILITY OPERATION CONDITIONS

~~Facility Description [326 IAC 2-7-5(15)]:~~**Emission Unit Description:**

(e) One (1) Main Refinery Flare, identified as 700V-101 with a maximum heat input rate of 371

mmBtu/hr of refinery fuel gas/process gas (with capacity for a supplementary pilot fuel heat input rate of 3.0 mmBtu/hr), installed in 1945 and replaced in 2006 and exhausting to stack 118. Under 40 CFR Part 60, Subpart Ja, the Main Refinery Flare is considered an affected facility.

(f) One (1) Crude heater equipped with a Low-NOx burner, identified as ~~C-II~~ **200-H2** with a maximum heat input rate of 131 mmBtu/hr, combusting refinery fuel gas ~~and No. 6 residual fuel oil~~, installed in 1955 and exhausting to stack 1~~;~~**. Under 40 CFR 63, Subpart DDDDD the Crude heater is considered an affected facility.**

(g) One (1) Unifiner heater, identified as 400-H5 with a maximum heat input rate of 20 mmBtu/hr, combusting refinery fuel gas, installed in 1959 and exhausting to stack 2~~;~~**. Under 40 CFR 63, Subpart DDDDD the Unifiner heater is considered an affected facility.**

(h) One (1) Cycle oil heater, identified as H-H2 with a maximum heat input rate of 10 mmBtu/hr, combusting refinery fuel gas, installed in 1956 and exhausting to stack 3~~;~~**. Under 40 CFR 63, Subpart DDDDD the Cycle oil heater is considered an affected facility.**

(i) One (1) Naphtha splitter heater, identified as 900-H1 with a maximum heat input rate of 12.2 mmBtu/hr, combusting refinery fuel gas, installed in 1956 and exhausting to stack 4~~;~~**. Under 40 CFR 63, Subpart DDDDD the Naphtha splitter heater is considered an affected facility.**

(j) One (1) Vacuum heater, identified as 200-H4 with a maximum heat input rate of 14.1 mmBtu/hr, combusting refinery fuel gas ~~and No. 6 residual fuel oil~~, installed in 1950, approved to be modified in 2007, and exhausting to stack 5~~;~~**. Under 40 CFR 63, Subpart DDDDD the Vacuum heater is considered an affected facility.**

(k) One (1) Old Platformer heater, identified as Naphtha Splitter Reboiler 900-H2 with a maximum heat input rate of 27 mmBtu/hr, combusting refinery fuel gas, installed in 1956 and exhausting to stack 6~~;~~**. Under 40 CFR 63, Subpart DDDDD the Old Platformer heater is considered an affected facility.**

(l) One (1) Alkylation unit heater, identified as 100-H1 with a maximum heat input rate of 13.2 mmBtu/hr, combusting refinery fuel gas and No. 6 residual fuel oil, installed in 1966 and exhausting to stack 7~~;~~**. Under 40 CFR 63, Subpart DDDDD the Alkylation unit heater is considered an affected facility.**

(m) One (1) Auxiliary crude heater, identified as 200-H1 with a maximum heat input rate of 10.1 mmBtu/hr, combusting refinery fuel gas, installed in 1966 and exhausting to stack 11~~;~~**. Under 40 CFR 63, Subpart DDDDD the Auxiliary crude heater is considered an affected facility.**

(n) One (1) Platformer stabilizer reb, identified as 300-H4 with a maximum heat input rate of 5.92 mmBtu/hr, combusting refinery fuel gas, installed in 1956 and exhausting to stack 12~~;~~**. Under 40 CFR 63, Subpart DDDDD the Platformer stabilizer reb is considered an affected facility.**

(o) One (1) no. 1 boiler, with a maximum heat input rate of 52 mmBtu/hr of process gas ~~and/or No. 6 residual oil~~, identified as B1 and exhausting to stack 8~~;~~**. Under 40 CFR 63, Subpart DDDDD the no. 1 boiler is considered an affected facility.**

(p) One (1) no. 2 boiler, with a maximum heat input rate of 65 mmBtu/hr of ~~residual oil and/or~~ process gas, identified as B2 and exhausting to stack 13~~;~~**. Under 40 CFR 63, Subpart DDDDD the no. 2 boiler is considered an affected facility.**

~~(q) One (1) no. 3 boiler, with a maximum heat input rate of 52 mmBtu/hr of residual oil and/or process gas, identified as B3 and exhausting to stack 14;~~

**(q) One (1) natural gas or refinery gas fired boiler, approved in 2014 for construction, identified as boiler B5, with a maximum heat input of 118.14 mmBtu/hr, equipped with low NOx burners, and exhausting to stack 132. Under 40 CFR 60, Subpart Db, the boiler B5 is considered an affected facility. Under 40 CFR 60, Subpart Ja, the boiler B5 is considered**

**an affected facility. Under 40 CFR 63, Subpart DDDDD, the boiler B5 is considered an affected facility.**

(r) One (1) Vacuum heater husky, identified as 200-H3 with a maximum heat input rate of 6.27 mmBtu/hr, combusting refinery fuel gas ~~No. 6 residual fuel oil~~, installed in 1963 and exhausting to stack 64~~;~~. **Under 40 CFR 63, Subpart DDDDD the Vacuum heater husky is considered an affected facility.**

(b) One (1) Fluid Catalytic Cracking Unit (FCCU) Raw Oil Pre-heater, identified as 500-H101 with a maximum heat input rate of 18.1 million British Thermal Units per hour (mmBtu/hr), combusting refinery fuel gas only (no sour water stripper overhead off-gas combustion), installed in 1945 and exhausting to stack 9.

(s) One (1) CCR Platformer Unit which includes one (1) CCR Platformer Heater, identified as 300 - H1, H2, H3 with a maximum heat input rate of 70.3 mmBtu/hr, combusting refinery fuel gas, installed in 1992 and exhausting to stack 74. Under 40 CFR 63, Subpart UUU, process vents on the CCR are considered affected sources at a petroleum refinery. **Under 40 CFR 60, Subpart J, the CCR Platformer Unit, is considered an affected facility. Under 40 CFR 63, Subpart DDDDD, the CCR is considered an affected facility.**

(oo) One (1) boiler identified as B4, constructed in 2006, with a maximum heat input rate of 84.9 MMBtu/hr of process gas ~~and/or No. 6 residual oil~~ and/or natural gas, identified as B4 and exhausting to stack 131.

Under the Standards of Performance for Small Industrial-Commercial-Institutional Steam Generating Units NSPS (40 CFR 60, Subpart Dc), the boiler identified as boiler B4 above is considered an affected facility.

Under the Standards of Performance for Petroleum Refineries (40 CFR Part 60, Subpart J), the boiler identified as boiler B4 above, is considered an affected facility. **Under 40 CFR 63, Subpart DDDDD, the boiler B4 is considered an affected facility.**

(The information describing the process contained in this emissions unit description box is descriptive information and does not constitute enforceable conditions.)

**Emission Limitations and Standards [326 IAC 2-7-5(1)]**

**D.5.1 NOx Minor Emission Limitation [326 IAC 2-2]**

**In order to render the requirements of 326 IAC 2-2 (PSD) not applicable, the Permittee shall comply with the following:**

**The $NO_x$ emission rate from the boiler B5 shall not exceed 31.05 tons per twelve (12) consecutive month period, with compliance determined at the end of each month.**

**Compliance with this emission limit, in conjunction with the PTE of GenB5, will ensure that the potential to emit from this modification is less than forty (40) tons of $NO_x$ per year and therefore will render the requirements of 326 IAC 2-2 not applicable.**

D.5.~~1~~**2** Particulate Matter (PM) [326 IAC 6-2-3]

Pursuant to 326 IAC 6-2-3 (Particulate Matter Emission Limitations for Sources of Indirect Heating), the PM emissions from boilers B1~~,~~ **and** B2 ~~and B3~~ shall be limited to 0.40~~,~~ **and** 0.25 ~~and 0.40~~ pounds per MMBtu heat input, respectively.

***

D.5.~~2~~**3** Particulate Matter (PM) [326 IAC 6-2-4]

~~Pursuant to 326 IAC 6-2-4 (Particulate Matter Emissions Limitations), particulate emissions from the one (1) 84.9 MMBtu/hr boiler, identified as B4, burning refinery fuel gas and No. 6 residual fuel~~

~~oil as primary fuels and natural gas as secondary fuel, shall be limited to 0.25 lb/MMBtu based on the following equation :~~

~~$Pt = 1.09 / Q^{0.26}$ where: Pt = pounds of PM emitted per MMBtu heat input (lb/MMBtu)~~
~~Q = total source operating capacity (MMBtu/hr) = 253.9~~

**Pursuant to 326 IAC 6-2-4 (Particulate Emission Limitations for Sources of Indirect Heating), the PM emissions from the following units shall be limited to Pt pounds per MMBtu heat input, as follows:**

| Emission Unit | Unit ID | Pt (lb/MMBtu) |
|---|---|---|
| **Boiler** | **B4** | **0.25** |
| **Boiler** | **B5** | **0.26** |

D.5.~~3~~**4** Sulfur Dioxide (SO2) [326 IAC 7-1.1-1] [326 IAC 7-2-1]

~~(a)~~ Pursuant to 326 IAC 7-1.1 ($SO_2$ Emissions Limitations) the $SO_2$ emissions from the emission unit~~s~~ ~~C-II, boilers Nos. 1, 2 and 3, 200-H4, A-HI, H101, and V-III~~ **100-H1**, when burning No. 6 residual fuel oil, shall not exceed 1.6 pounds per MMBtu heat input.

~~(b) Pursuant to 326 IAC 7-1.1 ($SO_2$ Emissions Limitations) the $SO_2$ emissions from the boiler B4, when burning No. 6 residual fuel oil, shall not exceed 1.6 pounds per MMBtu heat input.~~

~~D.5.4 PSD Minor Limit [326 IAC 2-2]~~

~~(a) Pursuant to Significant Permit Modification (129-20112-00003), issued on March 21, 2005 and as revised by Significant Permit Modification (129-23090-00003), the input of No. 6 fuel oil to the four (4) boilers B1, B2, B3, and B4 with a maximum fuel oil sulfur content of 0.8 percent, shall be limited to 3,214.92 thousand gallons per twelve (12) consecutive month period with compliance determined at the end of each month. This usage limit is required to limit the $PM_{10}$ emissions from the boilers to less than 14.49 tons per twelve (12) consecutive month period. Therefore, pursuant to 326 IAC 2-2, the PSD requirements do not apply.~~

~~(b) Pursuant to Significant Permit Modification (129-23090-00003), issued on January 30, 2007, the input of No. 6 fuel oil to Boiler B4 shall be limited to less than 730,000 gallons (with maximum fuel oil sulfur content of 0.5%) per twelve (12) consecutive month period, with compliance determined at the end of each month. This fuel oil usage limit for boiler B4 is part of the total fuel oil usage limit of 3,214.92 thousand gallons per year for all four (4) boilers (B1, B2, B3 and B4). Therefore, pursuant to 326 IAC 2-2, the PSD requirements do not apply.~~

**D.5.5 Consent Decree (Civil No. 3:13-CV-00030-RLY-WGH) Requirements**

**(a) As required by Paragraph 27 of the Consent Decree entered in Civil No. 3:13-CV-00030-RLY-WGH and pursuant to SSM No. 129-33810-00003, on or before December 31, 2017, the Permittee shall use Qualifying Controls to reduce NOx emissions from the following combustion units by at least 68 tons per year so as to satisfy the following inequality: crude heater (200-H2), CCR Platformer Heater (300 H1, H2, H3), no. 1 boiler, no. 2 boiler, no. 3 boiler, and no. 4 boiler.**

$$\sum_{i=1}^{n}[E_{actual_i} - E_{allowable_i}] \geq 68\ tons\ of\ NOx\ per\ year$$

**Where:**

**(Eallowable)i = [(The permitted allowable pounds of NOx per million BTU for Combustion Unit i/(2000 pounds per ton)] x [(the lower of permitted or maximum heat input rate capacity in million**

**BTU per hour for Combustion Unit i) x (the lower of 8760 or permitted hours per year)];**

**(EActual)i = The tons of NOx per year prior actual emissions during the refinery baseline years (unless prior actual emissions exceed allowable emissions, then use allowable) as shown in Appendix A of the Consent Decree for the crude heater (200-H2), CCR Platformer Heater (300 H1, H2, H3), no. 1 boiler, no. 2 boiler, no. 3 boiler, and no. 4 boiler; and**

**n = The number of Combustion Units with Qualifying Controls from the following that are selected by the Permittee to satisfy the requirements of the equation set forth in this Condition: crude heater (200-H2), CCR Platformer Heater (300 H1, H2, H3), no. 1 boiler, no. 2 boiler, no. 3 boiler, and no. 4 boiler.**

**(b) The Permittee shall comply with the following limits:**

| Unit ID | Firing Rate, mmBTU/hr, annual average | NOx, lb/mmBTU | Hours of operation per year | NOx emissions, tons per year |
|---|---|---|---|---|
| B1 | 31.34 | 0.20 | 8,350 | 26.17 |
| B4 | 84.9 | 0.045 | 8,760 | 16.73 |
| B2 | Permanent shut down upon startup of B5 | | | |
| B3 | Permanent shut down | | | |

**Prior to monitoring with a CEMS, the NOx in lb/mmBtu shall be determined using a 12-hour average (averaging period of the reference test method), following completion of CEMS certification for B1 and B4, the NOx in lb/mmBtu shall be determined using a 365-day rolling average.**

**D.5.6 Consent Decree Requirements [326 IAC 2-7-10.5]**

**As required by Paragraph 38 of the Consent Decree entered in Civil No. 3:13-CV-00030-RLY-WGH and pursuant to SSM No. 129-33810-00003:**

**(a) By no later than the "Date of Entry" of the Consent Decree in Civil No. 3:13-CV-00030-RLY-WGH, the Permittee shall not burn Fuel Oil in any existing combustion device except during periods of Natural Gas Curtailment, Test Runs, or operator training. Nothing in this prohibition limits the Permittee's ability to burn Torch Oil in an FCCU regenerator to assist in starting, restarting, maintaining hot standby, or maintaining regenerator heat balance.**

**(b) By no later than the "Date of Lodging" of the Consent Decree in Civil No. 3:13-CV-00030-RLY-WGH, the Permittee shall not construct any new combustion device that burns Fuel Oil unless the air pollution control equipment controlling the combustion device either:**

**(1) has an SO2 control efficiency of 90% or greater; or**

**(2) achieves an SO2 concentration of 20 ppm or less at 0% O2 on a 3-hour rolling average basis.**

**Nothing in this Condition exempts the Permittee from securing all necessary permits before constructing a new combustion device.**

**D.5.7 Consent Decree Requirements [326 IAC 2-7-10.5] – Main Flare**

**As required by Paragraph B.25 of the Consent Decree in Civil No. 3:13-CV-00030-RLY-WGH and pursuant to SSM No. 129-33810-00003, by no later than the Date of Entry, CountryMark shall comply with the following requirements at the Covered Flare:**

**(a) CountryMark shall operate the Covered Flare at all times when emissions may be vented to it.**

**(b) Except for periods of Startup, Shutdown, and/or Malfunction of the Covered Flare, CountryMark shall operate the Covered Flare with no Visible Emissions. Method 22 in 40 C.F.R. Part 60, Appendix A, shall be used to determine compliance with this standard. However, for purposes of this Appendix, Visible Emissions may be determined by either a person certified pursuant to Method 22 or by a video camera.**

**(c) Except for periods of Malfunction of the Flare, CountryMark shall operate each Covered Flare with a flame present at all times. CountryMark shall monitor the presence of the pilot flame using a thermocouple or any other equivalent device to detect the presence of the pilot flame.**

**(d) CountryMark shall comply with all applicable Subparts of 40 C.F.R. Parts 60, 61, or 63 that state how a particular Covered Flare must be monitored.**

**(e) At all times, including during periods of Startup, Shutdown, and/or Malfunction, CountryMark shall implement good air pollution control practices to minimize emissions from the Covered Flare; provided however, that CountryMark shall not be in violation of this requirement for any practice that this Appendix requires CountryMark to implement after the Date of Entry for the period between the Date of Entry and the implementation date or compliance date (whichever is applicable) for the particular practice.**

**D.5.8 Standards of Performance for Petroleum Refineries [326 IAC 12] [40 CFR 60, Subpart J] [40 CFR 60, Subpart Ja] [326 IAC 2-7-10.5]**

**As required by Paragraph B.39 and B.40 of the Consent Decree in Civil No. 3:13-CV-00030-RLY-WGH and pursuant to SSM No. 129-33810-00003:**

**(a) Beginning on March 31, 2013, and continuing until, pursuant (b) below, the Covered Flare becomes subject to 40 C.F.R. Part 60, Subpart Ja, the Covered Flare shall be an "affected facility" as that term is used in the NSPS at Subparts A and J, and shall be subject to and comply with the requirements of Subparts A and J, including all monitoring, recordkeeping, reporting and operating requirements.**

**(b) The Covered Flare shall be an "affected facility" within the meaning of Subparts A and Ja of 40 C.F.R. Part 60, and shall comply with the requirements of Subparts A and Ja, including all monitoring, recordkeeping, reporting, and operating requirements, by the later of: (i) March 31, 2013; or (ii) the earliest date(s) by which a "modified" flare (within the meaning of Subpart Ja) must comply with the requirements of Subpart Ja.**

**(1) To the extent that the later of the two possible dates is March 31, 2013, then Subpart Ja, and not Subpart J, is the applicable Subpart on and after March 31, 2013.**

**(2) To the extent that the later of the two possible dates is "the earliest date by which a 'modified' flare (within the meaning of Subpart Ja) must comply with the requirements of Subpart Ja," then Subpart J is applicable between March 31, 2013, and the applicable date(s) of Subpart Ja. Thereafter, only Subpart Ja is applicable.**

**(3) On and after the date(s) that the Covered Flare is subject to Subpart Ja, Subpart J no longer is applicable to that Covered Flare.**

D.5.~~5~~ **9** Preventive Maintenance Plan [326 IAC 2-7-5(~~13~~**12**)]

A Preventive Maintenance Plan is required for the one (1) Main Refinery Flare, identified as 700-V101, one (1) Crude heater equipped with a Low-NOx burner, identified as ~~C-II~~ **200-H2**, one (1) Unifiner heater, identified as 400-H5, one (1) Cycle oil heater, identified as H-H2, one (1) Naphtha splitter heater, identified as 900-H1, one (1) Vacuum heater, identified as 200-H4, one (1) Old Platformer heater, identified as Nap**h**tha S~~;~~**p**litter Reboiler 900-H2, one (1) Alkylation unit heater, identified as 100-H1, one (1) Auxiliary crude heater, identified as 200-H1, one (1) Platformer stabilizer , identified as 300-H4, four (4) boilers, identified as B1, B2, ~~B3,~~ B4, **B5** one (1) Vacuum heater husky, identified as 200-H3, One (1) Fluid Catalytic Cracking Unit (FCCU) Raw Oil Pre-heater, identified as 500-H101, and their control devices. Section B - Preventive Maintenance Plan contains the Permittee's obligation with regard to the preventive maintenance plan required by this condition.

Compliance Determination Requirements

D.5.~~6~~**10** Sulfur Dioxide Emissions and Sulfur Content

Compliance with Condition D.5.~~3~~**4** shall be determined utilizing one of the following options:

***

**D.5.11 NOx Limitation Averaging Time and Monitoring Requirements**

**As required by Paragraph 31 of the Consent Decree entered in Civil No. 3:13-CV-00030-RLY-WGH and pursuant to SSM No. 129-33810-00003, except for any Combustion Unit for which the Qualifying Control is a permanent shutdown as identified in Subparagraph 26.d of the Consent Decree, beginning no later than one-hundred eighty (180) days after installing Qualifying Controls on and commencing operation of a Combustion Unit that will be used to satisfy the requirements of Paragraph 27 of the Consent Decree, the Permittee will monitor the Combustion Units as follows:**

**(a) For Combustion Units with a maximum physical capacity greater than 100 mmBTU/hr (HHV), install or continue to operate a NOx CEMS;**

**(b) For Combustion Units with a maximum physical capacity of less than or equal to 100 mmBTU/hr (HHV), conduct an initial performance test and any periodic tests that may be required by EPA or by IDEM under other applicable regulatory authority. The results of the initial performance testing will be reported to EPA and IDEM.**

**The Permittee will use Method 7E of 40 C.F.R. Part 60, Appendix A-4 (or a test method made applicable by a future, final EPA regulation) to conduct initial performance testing for NOx emissions required by Subparagraph 31.b of the Consent Decree. Units with Qualifying Controls installed before the Date of Entry that are subject to this Condition will comply by no later than July 31, 2013.**

**D.5.12 Continuous Emissions Monitoring [326 IAC 3-5] [326 IAC 2-7-6(1),(6)][40 CFR 60, Subpart Db]**

**(a) As required by Paragraph 32 of the Consent Decree in Civil No. 3:13-CV-00030-RLY-WGH and pursuant to SSM No. 129-33810-00003, the Permittee shall use $NO_X$ CEMS to demonstrate compliance with the $NO_X$ limits in Condition D.5.5. The Permittee shall install, certify, calibrate, maintain and operate any $NO_X$ CEMS required by Paragraph 31.a in accordance with the provisions of 40 CFR 60.13 that are applicable to CEMS (excluding those provisions applicable only to Continuous Opacity Monitoring Systems) and Part 60 Appendices A and F, and the applicable**

**performance specification test of 40 CFR Part 60 Appendix B. However, unless Appendix F is required by the NSPS, state law or regulation, or a permit or approval, in lieu of the requirements of 40 CFR Appendix F 5.1.1, 5.1.3, and 5.1.4, the Permittee may conduct: (1) either a Relative Accuracy Audit (RAA) or a Relative Accuracy Test Audit (RATA) once every three years: and (2) a Cylinder Gas Audit (CGA) each calendar quarter in which a RAA or RATA is not performed. If the CEMS must be moved because of the installation of control equipment, the Permittee shall promptly reinstall, re-calibrate, and re-certify the CEMS.**

**(b) In order to demonstrate compliance with the a 365-day rolling average $NO_X$ limits in Condition D.5.5 (b) for B1 and B4, the Permittee shall use a $NO_X$ CEMS meeting the requirements of (a) and (d) of this Condition.**

**(c) Pursuant to 326 IAC 3-5 (Continuous Monitoring of Emissions) continuous emission monitoring systems for Combustion Units generating steam with a maximum physical capacity greater than 100 mmBTU/hr (HHV) and boiler B5 shall be calibrated, maintained, and operated for measuring $NO_x$, which meet all applicable performance specifications of 326 IAC 3-5-2.**

**(d) All continuous emissions monitoring systems are subject to monitor system certification requirements pursuant to 326 IAC 3-5-3.**

**(e) Nothing in this permit shall excuse the Permittee from complying with the requirements to operate a continuous emission monitoring system pursuant to 326 IAC 3-5, 40 CFR 60, Subpart Db, 40 CFR 60, Subpart Ja, and 40 CFR 63, Subpart DDDDD.**

Compliance Monitoring Requirements [326 IAC 2-5.1-3(e)(2)] [ 326 IAC 2-6.1-5(a)(2)]

~~D.5.7 Visible Emissions Notations~~

~~(a) Visible emission notations of the boiler stacks (B1, B2, B3, and B4) exhaust shall be performed once per day during normal daylight operations while combusting fuel oil. A trained employee shall record whether emissions are normal or abnormal.~~

~~(b) For processes operated continuously, "normal" means those conditions prevailing, or expected to prevail, eighty percent (80%) of the time the process is in operation, not counting startup or shut down time.~~

~~(c) In the case of batch or discontinuous operations, readings shall be taken during that part of the operation that would normally be expected to cause the greatest emissions.~~

~~(d) A trained employee is an employee who has worked at the plant at least one (1) month and has been trained in the appearance and characteristics of normal visible emissions for that specific process.~~

~~(e) If abnormal emissions are observed, the Permittee shall take reasonable response. steps in accordance with Section C - Response to Excursions or Exceedances. Failure to take response steps in accordance with Section C - Response to Excursions or Exceedances, shall be considered a deviation from this permit.~~

**D.5.13 $NO_x$ Continuous Emissions Monitoring (CEMS) Equipment Downtime**

**In the event that a breakdown of a $NO_x$ continuous emissions monitoring system (CEMS) occurs, a record shall be made of the time and reason of the breakdown and efforts made to correct the problem.**

Record Keeping and Reporting Requirement [326 IAC 2-7-5(3)] [326 IAC 2-7-19]

D.5.~~8~~**14** Record Keeping Requirements **[326 IAC 2-7-5(3)(A)(iii)][326 IAC 3-5]**

(a) To document the compliance status with Condition~~s D.5.3 and~~ D.5.4, the Permittee shall maintain records in accordance with (1) through (6) below.

(1) Calendar dates covered in the compliance determination period;

(2) Actual No. 6 residual fuel oil usage per month since last compliance determination period and equivalent $SO_2$ emissions;

(3) A certification, signed by the Permittee, that the records of the fuel supplier certifications represent all of the fuel combusted during the period; and

If the fuel supplier certification is used to demonstrate compliance the following, as a minimum, shall be maintained:

(4) Fuel supplier certifications.

(5) The name of the fuel supplier; and

(6) A statement from the fuel supplier that certifies the sulfur content of the fuel oil.

The Permittee shall retain records of all recording/monitoring data and support information for a period of five (5) years or longer if specified elsewhere in this permit, from the date of the monitoring sample, measurement, or report. Support information includes all calibration and maintenance records and all original strip-chart recordings for continuous monitoring instrumentation, and copies of all reports required by this permit.

**(d) To document the compliance status with Conditions D.5.5 the Permittee shall maintain records in accordance with (1) through (3) below.**

**(1) The annual boiler B1 and boiler B4 fuel usage and the annual average fuel BTU content.**

**(2) Boiler B1 and boiler B4 NOx emission rate from the $NO_x$ CEMS.**

**(3) Boiler B1 and boiler B4 annual hours of operation.**

**The Permittee shall retain records of all recording/monitoring data and support information for a period of five (5) years or longer if specified elsewhere in this permit, from the date of the monitoring sample, measurement, or report. Support information includes all calibration and maintenance records and all original strip-chart recordings for continuous monitoring instrumentation, and copies of all reports required by this permit.**

**(e) To document the compliance status with Condition D.5.1, the Permittee shall maintain records of the tons of NOx emitted monthly and per twelve (12) consecutive month period from boiler B5.**

**(f) The Permittee shall record the output of the continuous monitoring system(s) tons per hour and shall perform the required record keeping pursuant to 326 IAC 3-5-6 and 326 IAC 3-5-7.**

**(g) In the event that a breakdown of the $NO_x$ continuous emission monitoring systems (CEMS) occurs, the Permittee shall maintain records of all CEMS malfunctions, out of control periods, calibration and adjustment activities, and repair or maintenance activities.**

~~(b) To document the compliance status with Condition D.5.5, the Permittee shall maintain daily records of visible emission notations of the four boiler stacks (B1, B2, B3, and B4). once per day or maintain a record of the reason why the visible emission notations were not taken.~~

(~~c~~**h**) Section C - General Record Keeping Requirements, of this permit contains the Permittee's obligations with regard to the records required by this condition.

D.5.~~9~~**15** Reporting Requirements **[326 IAC 2-7-5(3)(A)(iii)][326 IAC 3-5]**

(a) A quarterly summary of the information to document compliance with Condition ~~D.5.4~~ **D.5.1** shall be submitted ~~to the address listed in Section C - General Reporting Requirements, of this permit, using the reporting forms located at the end of this permit, or their equivalent, within~~ **not later than** thirty (30) days after the end of the quarter being reported. **Section C - General Reporting contains the Permittee's obligation with regard to the reporting required by this condition.** The report submitted by the Permittee does require ~~the~~ **a** certification **that meets the requirements of 326 IAC 2-7-6(1)** by ~~the~~ **a** "responsible official," as defined by 326 IAC 2-7-1 (~~34~~**35**).

**(b) The Permittee shall prepare and submit to IDEM, OAQ a written report of the results of the calibration gas audits and relative accuracy test audits for each calendar quarter within thirty (30) calendar days after the end of each quarter. The report must contain the information required by 326 IAC 3-5-5(e)(2).**

**The report submitted by the Permittee does require the certification by the "responsible official" as defined by 326 IAC 2-7-1(35).**

**(c) Pursuant to 326 IAC 3-5-7(5), reporting of continuous monitoring system instrument downtime, except for zero (0) and span checks, which shall be reported separately, shall include the following:**

**(1) date of downtime;**

**(2) time of commencement;**

**(3) duration of each downtime;**

**(4) reasons for each downtime; and**

**(5) nature of system repairs and adjustments.**

**The report submitted by the Permittee does require the certification by the "responsible official" as defined by 326 IAC 2-7-1(35).**

SECTION D.6 FACILITY OPERATION CONDITIONS

~~Facility Description [326 IAC 2-7-5(15)]:~~**Emission Unit Description:**

***

SECTION E.2 FACILITY OPERATION CONDITIONS

~~Facility Description [326 IAC 2-7-5(15)]:~~**Emission Unit Description:**

(c) One (1) FCCU regenerator, identified as 500V-5 with an average throughput rate of 380 barrels fresh feed per hour, installed in 1950, controlled by a cyclone and exhausting to stack 10. Under 40 CFR 63, Subpart UUU, process vents on the FCCU are considered affected sources at a

petroleum refinery. **Under 40 CFR 60, Subpart J, the 500V-5 is considered an affected facility by the Consent Decree as of "Date of Entry" for $SO_2$ and CO.**

(s) One (1) CCR Platformer Unit which includes one (1) CCR Platformer Heater, identified as 300 - H1, H2, H3 with a maximum heat input rate of 70.3 mmBtu/hr, combusting refinery fuel gas, installed in 1992 and exhausting to stack 74. Under 40 CFR 63, Subpart UUU, process vents on the CCR are considered affected sources at a petroleum refinery. **Under 40 CFR 60, Subpart J, the CCR Platformer Unit, is considered an affected facility. Under 40 CFR 63, Subpart DDDDD, the CCR is considered an affected facility.**

(ll) One (1) Tail Gas Treatment System and Sulfur Recovery System identified as 124 and consisting of the following: Under 40 CFR 63, Subpart UUU, these facilities and the associated process vents and bypass lines are considered affected sources at a petroleum refinery. **Under 40 CFR 60, Subpart Ja, the Tail Gas Treatment System and Sulfur Recovery System, is considered an affected facility by the Consent Decree as of June 3, 2013.**

(3) One (1) Tail Gas Treating Unit (TGTU) Incinerator (520-H-162), identified as 124-3, with a maximum process flow rate of 48,000 dry standard cubic feet per day, and exhausting through one (1) stack identified as 124-3, constructed in 2005.

(4) One (1) Sour Flare (520-H-163), identified as 124-4, with a maximum burner capacity of 0.92 MMBtu per hour, and a maximum process flow rate of 200 standard cubic feet per hour, and exhausting through one (1) stack identified as 124-4, constructed in 2005. **Under 40 CFR 60, Subpart J, the Sour Flare, is considered an affected facility by the Consent Decree as of March 31, 2013.**

Under 40 CFR 63, Subpart UUU, these facilities and the associated process vents and bypass lines are considered affected sources at a petroleum refinery.

(The information describing the process contained in this emissions unit description box is descriptive information and does not constitute enforceable conditions.)

SECTION E.3 FACILITY OPERATION CONDITIONS

~~Facility Description [326 IAC 2-7-5(15)]:~~**Emission Unit Description:**

**(c) One (1) FCCU regenerator, identified as 500V-5 with an average throughput rate of 380 barrels fresh feed per hour, installed in 1950, controlled by a cyclone and exhausting to stack 10. Under 40 CFR 63, Subpart UUU, process vents on the FCCU are considered affected sources at a petroleum refinery. Under 40 CFR 60, Subpart J, the 500V-5 is considered an affected facility by the Consent Decree as of "Date of Entry" for $SO_2$ and CO.**

**(s) One (1) CCR Platformer Unit which includes one (1) CCR Platformer Heater, identified as 300 - H1, H2, H3 with a maximum heat input rate of 70.3 mmBtu/hr, combusting refinery fuel gas, installed in 1992 and exhausting to stack 74. Under 40 CFR 63, Subpart UUU, process vents on the CCR are considered affected sources at a petroleum refinery. Under 40 CFR 60, Subpart J, the CCR Platformer Unit, is considered an affected facility. Under 40 CFR 63, Subpart DDDDD, the CCR is considered an affected facility.**

(jj) One (1) Hydrotreating Unit Reactor charge heater**, identified as** ~~(~~210-H-100~~), identified as 122~~, with a maximum heat input rating of 19.25 MMBtu per hour, combusting refinery fuel gas as a primary fuel and natural gas as a back up fuel, and exhausting through one (1) stack identified as 122, constructed in 2005. **Under 40 CFR 60, Subpart J, the Hydrotreating Unit Reactor charge heater, is considered an affected facility. Under 40 CFR 63, Subpart DDDDD, the Hydrotreating Unit Reactor charge heater is considered an affected facility.**

(kk) One (1) Hydrotreating Unit Reboiler Stabilizer**, identified as** ~~(~~210-H-101~~), identified as 123~~, with a

maximum heat input rating of 19.94 MMBtu per hour, combusting refinery fuel gas as a primary fuel and natural gas as a back up fuel, and exhausting through one (1) stack identified as 123 constructed in 2005. **Under 40 CFR 60, Subpart J, the Hydrotreating Unit Reboiler Stabilizer, is considered an affected facility. Under 40 CFR 63, Subpart DDDDD, the Hydrotreating Unit Reboiler Stabilizer is considered an affected facility.**

(ll)

(1) One (1) Claus Unit Startup burner (SRU Burner 520-H-101), identified as 124-1, with a maximum heat input rating of 1.54 MMBtu per hour, combusting natural gas, and exhausting through one (1) stack identified as 124-1, constructed in 2005. **Under 40 CFR 60, Subpart J, the Claus Unit Startup burner, is considered an affected facility. Under 40 CFR 63, Subpart DDDDD, the Claus Unit Startup burner is considered an affected facility.**

(2) One (1) Tail Gas Treating Unit (TGTU) Incinerator burner (Claus~~e~~ Furnace 520-H-102), identified as 124-2, with a maximum heat input rating of 1.29 MMBtu per hour, combusting refinery fuel gas as a primary fuel and natural as a back fuel, and exhausting through one (1) stack identified as 124-2, constructed in 2005. In the event of unscheduled shutdown of the CCR unit, the Sulfur Recovery Unit effluent will be routed directly to the TGTU incinerator. **Under 40 CFR 60, Subpart J, the Tail Gas Treating Unit (TGTU) Incinerator burner, is considered an affected facility. Under 40 CFR 63, Subpart DDDDD, the Tail Gas Treating Unit (TGTU) Incinerator burner is considered an affected facility.**

(3) One (1) Tail Gas Treating Unit (TGTU) Incinerator (520-H-162), identified as 124-3, with a maximum process flow rate of 48,000 dry standard cubic feet per day, and exhausting through one (1) stack identified as 124-3, constructed in 2005.

(4) One (1) Sour Flare (520-H-163), identified as 124-4, with a maximum burner capacity of 0.92 MMBtu per hour, and a maximum process flow rate of 200 standard cubic feet per hour, and exhausting through one (1) stack identified as 124-4, constructed in 2005. **Under 40 CFR 60, Subpart J, the Sour Flare, is considered an affected facility by the Consent Decree as of March 31, 2013.**

(oo) One (1) boiler identified as B4, constructed in 2006, with a maximum heat input rate of 84.9 MMBtu/hr of process gas ~~and/or No. 6 residual oil~~ and/or natural gas, identified as B4 and exhausting to stack 131.

Under the Standards of Performance for Small Industrial-Commercial-Institutional Steam Generating Units NSPS (40 CFR 60, Subpart Dc), the boiler identified as boiler B4 above is considered an affected facility.

Under the Standards of Performance for Petroleum Refineries (40 CFR Part 60, Subpart J), the boiler identified as boiler B4 above, is considered an affected facility. **Under 40 CFR 63, Subpart DDDDD, the boiler B4 is considered an affected facility.**

(The information describing the process contained in this emissions unit description box is descriptive information and does not constitute enforceable conditions.)

***

E.3.2 Standards of Performance for Petroleum Refineries [40 CFR Part 60, Subpart J] [326 IAC 12]

The Permittee shall comply with the provisions of 40 CFR 60, Subpart J - Standards of Performance for Petroleum Refineries, which are incorporated by reference as 326 IAC 12-1-1. This rule is included as Attachment H. This source is subject to the following requirements of 40 CFR Part 60, Subpart J:

(1) 40 CFR 60.100

(2) 40 CFR 60.101
**(3) 40 CFR 60.103**
(~~3~~**4**) 40 CFR 60.104(a)(1)**, (b)**
(~~4~~**5**) 40 CFR 60.105(a), (b), (e)~~(3)~~
(~~5~~**6**) 40 CFR 60.106(a), **(d),** (e)(1)(i-iii)**, (f-k)**
(~~6~~**7**) 40 CFR 60.107(e), (f), (g)
(~~7~~**8**) 40 CFR 60.108(a)
(~~8~~**9**) 40 CFR 60.109

SECTION E.4 FACILITY OPERATION CONDITIONS

~~Facility Description [326 IAC 2-7-5(15)]:~~**Emission Unit Description:**

***

SECTION E.5 FACILITY OPERATION CONDITIONS

~~Facility Description [326 IAC 2-7-5(15)]:~~**Emission Unit Description:**

***

SECTION E.6 FACILITY OPERATION CONDITIONS

~~Facility Description [326 IAC 2-7-5(15)]:~~**Emission Unit Description:**

***

SECTION E.7 FACILITY OPERATION CONDITIONS

~~Facility Description [326 IAC 2-7-5(15)]:~~**Emission Unit Description:**

***

SECTION E.8 FACILITY OPERATION CONDITIONS

~~Facility Description [326 IAC 2-7-5(15)]:~~**Emission Unit Description:**

***
**(The information describing the process contained in this facility description box is descriptive information and does not constitute enforceable conditions.)**
***

SECTION E.9 FACILITY OPERATION CONDITIONS

~~Facility Description [326 IAC 2-7-5(15)]:~~**Emission Unit Description:**

(oo) One (1) boiler identified as B4, constructed in 2006, with a maximum heat input rate of 84.9 MMBtu/hr of process gas ~~and/or No. 6 residual oil~~ and/or natural gas, identified as B4 and exhausting to stack 131.

Under the Standards of Performance for Small Industrial-Commercial-Institutional Steam Generating Units NSPS (40 CFR 60, Subpart Dc), the boiler identified as boiler B4 above is considered an affected facility.

Under the Standards of Performance for Petroleum Refineries (40 CFR Part 60, Subpart J), the boiler identified as boiler B4 above, is considered an affected facility. **Under 40 CFR 63, Subpart DDDDD, the boiler B4 is considered an affected facility.**

***

SECTION E.10 FACILITY OPERATION CONDITIONS

~~Facility Description [326 IAC 2-7-5(15)]:~~**Emission Unit Description:**

***

SECTION E.11 FACILITY OPERATION CONDITIONS

~~Facility Description [326 IAC 2-7-5(15)]:~~**Emission Unit Description:**

***

SECTION E.12 FACILITY OPERATION CONDITIONS

~~Facility Description [326 IAC 2-7-5(15)]:~~**Emission Unit Description:**

(e) One (1) Main Refinery Flare, identified as RCD-1 with a maximum heat input rate of 371 MMBtu/hr of refinery fuel gas/process gas (with capacity for a supplementary pilot fuel heat input rate of 3.0 MMBtu/hr), installed in 1945 and replaced in 2006 and exhausting to stack 118;

**(q) One (1) natural gas or refinery gas fired boiler, approved in 2014 for construction, identified as boiler B5, with a maximum heat input of 118.14 mmBtu/hr, equipped with low NOx burners, and exhausting to stack 132. Under 40 CFR 60, Subpart Db, the boiler B5 is considered an affected facility. Under 40 CFR 60, Subpart Ja, the boiler B5 is considered an affected facility. Under 40 CFR 63, Subpart DDDDD, the boiler B5 is considered an affected facility.**

**(ll) One (1) Tail Gas Treatment System and Sulfur Recovery System identified as 124 and consisting of the following: Under 40 CFR 63, Subpart UUU, these facilities and the associated process vents and bypass lines are considered affected sources at a petroleum refinery. Under 40 CFR 60, Subpart Ja, the Tail Gas Treatment System and Sulfur Recovery System, is considered an affected facility by the Consent Decree as of June 3, 2013.**

(pp) (1) LSG Reactor Charge Heater**, identified as** (810-H101)**,** approved for construction in 2008, with a maximum capacity of 5.985 MMBtu, combusting refinery fuel gas only, and venting to stack 128. Under 40 CFR Part 60, Subpart Ja, the LSG Reactor Charge Heater is considered an affected facility. **Under 40 CFR 63, Subpart DDDDD, the LSG Reactor Charge Heater is considered an affected facility.**

(The information describing the process contained in this facility description box is descriptive information and does not constitute enforceable conditions.)

***

E.12.2 Standards of Performance for Petroleum Refineries for Which Construction, Reconstruction, or Modification Commenced After May 14, 2007 NSPS [40 CFR Part 60, Subpart Ja ~~(Certain Sections Currently Under Indefinite Stay)~~]

Pursuant to 40 CFR Part 60, Subpart Ja, the Permittee comply with the Standards of Performance for ~~Equipment Leaks of VOC in~~ Petroleum Refineries for which Construction, Reconstruction, or Modification Commenced after May 14, 2007, for the refinery flare**, boiler B5, the Sulfur Recovery Plant,** and LSG Reactor Charge Heater specified above. A copy of this rule is included as Attachment L. The source is subject to the following requirements of 40 CFR Part 60, Subpart Ja:

(1) 40 CFR 60.100a
(2) 40 CFR 60.101a
(3) 40 CFR 60.102a **(a),** (g), ~~(h)~~ **(f)(2)**
(4) 40 CFR 60.103a
(5) 40 CFR 60.104a
**(6) 40 CFR 60.106a**
(~~6~~**7**) 40 CFR 60.107a
(~~7~~**8**) 40 CFR 60.108a
**(9) 40 CFR 60.109a**

**SECTION E.13 FACILITY OPERATION CONDITIONS**

**Emission Unit Description:**

**(q) One (1) natural gas or refinery gas fired boiler, approved in 2014 for construction, identified as boiler B5, with a maximum heat input of 118.14 mmBtu/hr, equipped with low NOx burners, and exhausting to stack 132. Under 40 CFR 60, Subpart Db, the boiler B5 is considered an affected facility. Under 40 CFR 60, Subpart Ja, the boiler B5 is considered an affected facility. Under 40 CFR 63, Subpart DDDDD, the boiler B5 is considered an affected facility.**

**(The information describing the process contained in this facility description box is descriptive information and does not constitute enforceable conditions.)**

**Emission Limitations and Standards [326 IAC 2-7-5(1)]**

**E.13.1 General Provisions Relating to NSPS [326 IAC 12-1-1] [40 CFR Part 60, Subpart A]**

**The provisions of 40 CFR Part 60, Subpart A - General Provisions, which are incorporated as 326 IAC 12-1-1, apply to a facility described in this section when such facility is defined in 40 CFR Part 60, Subpart Db as an "affected facility," except when otherwise specified in 40 CFR Part 60, Subpart Db.**

**E.13.2 Standards of Performance for Industrial-Commercial-Institutional Steam Generating Units [40 CFR Part 60, Subpart Db] [326 IAC 12-1-1]**

**Pursuant to 40 CFR Part 60, Subpart Db, the Permittee shall comply with the provisions of Standards of Performance for Industrial-Commercial-Institutional Steam Generating Units which are incorporated by reference as 326 IAC 12-1-1. A copy of this rule is included as Attachment M. This source is subject to the following requirements of 40 CFR Part 60, Subpart Db:**

**(1) 40 CFR 60.40b (a), (c)**
**(2) 40 CFR 60.41b**
**(3) 40 CFR 60.44b (a)(1)(ii), (h), (i)**
**(4) 40 CFR 60.46b (a), (c), (e)(1), (e)(4)**
**(5) 40 CFR 60.48b (b), (c), (d), (e)(2), (e)(3), (f), (g)(1)**

**(6) 40 CFR 60.49b (a)(1), (a)((3), (b), (d), (g), (h)(4), (i), (o), (v), (w)**

**SECTION E.14 FACILITY OPERATION CONDITIONS**

**Emission Unit Description:**

**Insignificant Activities**

**(e) Emergency generators as follows: Diesel generators not exceeding one thousand six hundred (1,600) horsepower.**

**(1) One (1) diesel fired emergency generator, approved in 2014 for construction, identified as GenB5, with a maximum heat input of 720 hp (500 KW). [40 CFR 60, Subpart IIII] [40 CFR 63, Subpart ZZZZ]**

**(2) One (1) diesel fired emergency generator, installed in 2008, identified as 700-P33 North Pond fire pump, with a maximum heat input of 420 hp (298 KW). [40 CFR 60, Subpart IIII] [40 CFR 63, Subpart ZZZZ]**

**(The information describing the process contained in this facility description box is descriptive information and does not constitute enforceable conditions.)**

**Emission Limitations and Standards [326 IAC 2-7-5(1)]**

**E.14.1 General Provisions Relating to NSPS [326 IAC 12-1-1] [40 CFR Part 60, Subpart A]**

**The provisions of 40 CFR Part 60, Subpart A - General Provisions, which are incorporated as 326 IAC 12-1-1, apply to a facility described in this section when such facility is defined in 40 CFR Part 60, Subpart IIII as an "affected facility," except when otherwise specified in 40 CFR Part 60, Subpart IIII.**

**E.14.2 Standards of Performance for Sationary Compression Ignition Internal Combustion Engines [40 CFR Part 60, Subpart IIII] [326 IAC 12-1-1]**

**Pursuant to 40 CFR Part 60, Subpart IIII, the Permittee shall comply with the provisions of Standards of Performance for Stationary Compression Ignition Internal Combustion Engines which are incorporated by reference as 326 IAC 12-1-1. A copy of this rule is included as Attachment N. This source is subject to the following requirements of 40 CFR Part 60, Subpart IIII:**

**(1) 40 CFR 60.4200**
**(2) 40 CFR 60.4205 (b), (c)**
**(3) 40 CFR 60.4206**
**(4) 40 CFR 60.4207 (a), (b)**
**(5) 40 cFR 60.4208**
**(6) 40 CFR 60.4211 (f), (g)**
**(7) 40 CFR 60.4214 (b), (d)**
**(8) 40 CFR 60.4218**
**(9) 40 CFR 60.42.19**
**(10) Table 4**
**(11) Table 8**

**SECTION E.15 FACILITY OPERATION CONDITIONS**

**Emission Unit Description:**

**Insignificant Activities**

**(e) Emergency generators as follows: Diesel generators not exceeding one thousand six hundred (1,600) horsepower.**

**(1) One (1) diesel fired emergency generator, approved in 2014 for construction, identified as GenB5, with a maximum heat input of 720 hp (500 KW). [40 CFR 60, Subpart IIII] [40 CFR 63, Subpart ZZZZ]**

**(2) One (1) diesel fired emergency generator, installed in 2008, identified as 700-P33 North Pond fire pump, with a maximum heat input of 420 hp (298 KW). [40 CFR 60, Subpart IIII] [40 CFR 63, Subpart ZZZZ]**

**(3) One (1) diesel fired emergency generator, installed in 2006, identified as 700-C8 Air Compressor, with a maximum heat input of 130 hp (97 KW). [40 CFR 63, Subpart ZZZZ]**

**(4) One (1) diesel fired emergency generator, installed in 2006, identified as 700-G2 Boilerhouse, with a maximum heat input of 393 hp (293 KW). [40 CFR 63, Subpart ZZZZ]**

**(5) One (1) diesel fired emergency generator, installed in 1992, identified as 700-P32 No. 2 Fire Pond pump, with a maximum heat input of 302 hp (225 KW). [40 CFR 63, Subpart ZZZZ]**

**(6) One (1) diesel fired emergency generator, installed in 1984, identified as 1000-P33B, with a maximum heat input of 240 hp (180 KW). [40 CFR 63, Subpart ZZZZ]**

**(7) One (1) diesel fired emergency generator, installed in 1967, identified as 700-P31 Golf Course pond pump, with a maximum heat input of 130 hp (97 KW). [40 CFR 63, Subpart ZZZZ]**

**(The information describing the process contained in this facility description box is descriptive information and does not constitute enforceable conditions.)**

**Emission Limitations and Standards [326 IAC 2-7-5(1)]**

**E.15.1 General Provisions Relating to NESHAP [326 IAC 20-1-1] [40 CFR 63, Subpart A]**

**The provisions of 40 CFR Part 63, Subpart A - General Provisions, which are incorporated as 326 IAC 20-1-1, apply to the facility described in this section except when otherwise specified in Table 8 of 40 CFR Part 63, Subpart ZZZZ.**

**E.15.2 National Emission Standards for Hazardous Air Pollutants for Stationary Reciprocating Internal Combustion Engines [40 CFR Part 63, Subpart ZZZZ] [326 IAC 20-82]**

**The Permittee shall comply with the provisions of 40 CFR 63, Subpart ZZZZ - National Emission Standards for Hazardous Air Pollutants for Stationary Reciprocating Internal Combustion Engines, which are incorporated by reference as 326 IAC 20-82. This rule is included as Attachment O. This source is subject to the following requirements of 40 CFR Part 63, Subpart ZZZZ:**

**(1) 40 CFR 63.6580**
**(2) 40 CFR 63.6585 (a), (b)**
**(3) 40 CFR 63.6590 (a), (c)**
**(4) 40 CFR 63.6595 (a)**
**(5) 40 CFR 63.6602**
**(6) 40 CFR 63.6604 (b)**
**(7) 40 CFR 63.6625 (e), (f), (h), (i)**
**(8) 40 CFR 63.6640 (a), (b), (f)**
**(9) 40 CFR 63.6645 (f)**

**(10) 40 CFR 63.6660**
**(11) 40 CFR 63.6665**
**(12) 40 CFR 63.6670**
**(13) 40 CFR 63.6675**
**(14) Table 2c**
**(15) Table 6**
**(16) Table 8**

**SECTION E.16 FACILITY OPERATION CONDITIONS**

**Emission Unit Description:**

**(b) One (1) Fluid Catalytic Cracking Unit (FCCU) Raw Oil Pre-heater, identified as 500-H101 with a maximum heat input rate of 18.1 million British Thermal Units per hour (mmBtu/hr), combusting refinery fuel gas only (no sour water stripper overhead off-gas combustion), installed in 1945 and exhausting to stack 9. Under 40 CFR 63, Subpart DDDDD the Fluid Catalytic Cracking Unit (FCCU) Raw Oil Pre-heater is considered an affected facility.**

**(f) One (1) Crude heater equipped with a Low-NOx burner, identified as 200-H2 with a maximum heat input rate of 131 mmBtu/hr, combusting refinery fuel gas, installed in 1955 and exhausting to stack 1. Under 40 CFR 63, Subpart DDDDD the Crude heater is considered an affected facility.**

**(g) One (1) Unifiner heater, identified as 400-H5 with a maximum heat input rate of 20 mmBtu/hr, combusting refinery fuel gas, installed in 1959 and exhausting to stack 2. Under 40 CFR 63, Subpart DDDDD the Unifiner heater is considered an affected facility.**

**(h) One (1) Cycle oil heater, identified as H-H2 with a maximum heat input rate of 10 mmBtu/hr, combusting refinery fuel gas, installed in 1956 and exhausting to stack 3. Under 40 CFR 63, Subpart DDDDD the Cycle oil heater is considered an affected facility.**

**(i) One (1) Naphtha splitter heater, identified as 900-H1 with a maximum heat input rate of 12.2 mmBtu/hr, combusting refinery fuel gas, installed in 1956 and exhausting to stack 4. Under 40 CFR 63, Subpart DDDDD the Naphtha splitter heater is considered an affected facility.**

**(j) One (1) Vacuum heater, identified as 200-H4 with a maximum heat input rate of 14.1 mmBtu/hr, combusting refinery fuel gas, installed in 1950, approved to be modified in 2007, and exhausting to stack 5. Under 40 CFR 63, Subpart DDDDD the Vacuum heater is considered an affected facility.**

**(k) One (1) Old Platformer heater, identified as Naphtha Splitter Reboiler 900-H2 with a maximum heat input rate of 27 mmBtu/hr, combusting refinery fuel gas, installed in 1956 and exhausting to stack 6. Under 40 CFR 63, Subpart DDDDD the Old Platformer heater is considered an affected facility.**

**(l) One (1) Alkylation unit heater, identified as 100-H1 with a maximum heat input rate of 13.2 mmBtu/hr, combusting refinery fuel gas and No. 6 residual fuel oil, installed in 1966 and exhausting to stack 7. Under 40 CFR 63, Subpart DDDDD the Alkylation unit heater is considered an affected facility.**

**(m) One (1) Auxiliary crude heater, identified as 200-H1 with a maximum heat input rate of 10.1 mmBtu/hr, combusting refinery fuel gas, installed in 1966 and exhausting to stack 11. Under 40 CFR 63, Subpart DDDDD the Auxiliary crude heater is considered an affected facility.**

**(n) One (1) Platformer stabilizer reb, identified as 300-H4 with a maximum heat input rate of 5.92 mmBtu/hr, combusting refinery fuel gas, installed in 1956 and exhausting to stack 12. Under 40 CFR 63, Subpart DDDDD the Platformer stabilizer reb is considered an affected facility.**

**(o) One (1) no. 1 boiler, with a maximum heat input rate of 52 mmBtu/hr of process gas, identified as B1 and exhausting to stack 8. Under 40 CFR 63, Subpart DDDDD the no. 1 boiler is considered an affected facility.**

**(p) One (1) no. 2 boiler, with a maximum heat input rate of 65 mmBtu/hr of process gas, identified as B2 and exhausting to stack 13. Under 40 CFR 63, Subpart DDDDD the no. 2 boiler is considered an affected facility.**

**(q) One (1) natural gas or refinery gas fired boiler, approved in 2014 for construction, identified as boiler B5, with a maximum heat input of 118.14 mmBtu/hr, equipped with low NOx burners, and exhausting to stack 132. Under 40 CFR 60, Subpart Db, the boiler B5 is considered an affected facility. Under 40 CFR 60, Subpart Ja, the boiler B5 is considered an affected facility. Under 40 CFR 63, Subpart DDDDD, the boiler B5 is considered an affected facility.**

**(r) One (1) Vacuum heater husky, identified as 200-H3 with a maximum heat input rate of 6.27 mmBtu/hr, combusting refinery fuel gas, installed in 1963 and exhausting to stack 64. Under 40 CFR 63, Subpart DDDDD the Vacuum heater husky is considered an affected facility.**

**(s) One (1) CCR Platformer Unit which includes one (1) CCR Platformer Heater, identified as 300 - H1, H2, H3 with a maximum heat input rate of 70.3 mmBtu/hr, combusting refinery fuel gas, installed in 1992 and exhausting to stack 74. Under 40 CFR 63, Subpart UUU, process vents on the CCR are considered affected sources at a petroleum refinery. Under 40 CFR 60, Subpart J, the CCR Platformer Unit, is considered an affected facility. Under 40 CFR 63, Subpart DDDDD, the CCR is considered an affected facility.**

**(jj) One (1) Hydrotreating Unit Reactor charge heater, identified as 210-H-100, with a maximum heat input rating of 19.25 MMBtu per hour, combusting refinery fuel gas as a primary fuel and natural gas as a back up fuel, and exhausting through one (1) stack identified as 122, constructed in 2005. Under 40 CFR 60, Subpart J, the Hydrotreating Unit Reactor charge heater, is considered an affected facility. Under 40 CFR 63, Subpart DDDDD, the Hydrotreating Unit Reactor charge heater is considered an affected facility.**

**(kk) One (1) Hydrotreating Unit Reboiler Stabilizer, identified as 210-H-101, with a maximum heat input rating of 19.94 MMBtu per hour, combusting refinery fuel gas as a primary fuel and natural gas as a back up fuel, and exhausting through one (1) stack identified as 123 constructed in 2005. Under 40 CFR 60, Subpart J, the Hydrotreating Unit Reboiler Stabilizer, is considered an affected facility. Under 40 CFR 63, Subpart DDDDD, the Hydrotreating Unit Reboiler Stabilizer is considered an affected facility.**

**(ll) One (1) Tail Gas Treatment System and Sulfur Recovery System identified as 124 and consisting of the following: Under 40 CFR 63, Subpart UUU, these facilities and the associated process vents and bypass lines are considered affected sources at a petroleum refinery. Under 40 CFR 60, Subpart Ja, the Tail Gas Treatment System and Sulfur Recovery System, is considered an affected facility by the Consent Decree as of June 3, 2013.**

**(1) One (1) Claus Unit Startup burner (SRU Burner 520-H-101), identified as 124-1, with a maximum heat input rating of 1.54 MMBtu per hour, combusting natural gas, and exhausting through one (1) stack identified as 124-1, constructed in 2005. Under 40 CFR 60, Subpart J, the Claus Unit Startup burner, is considered an affected facility.**

**Under 40 CFR 63, Subpart DDDDD, the Claus Unit Startup burner is considered an affected facility.**

**(2) One (1) Tail Gas Treating Unit (TGTU) Incinerator burner (Claus Furnace 520-H-102), identified as 124-2, with a maximum heat input rating of 1.29 MMBtu per hour, combusting refinery fuel gas as a primary fuel and natural as a back fuel, and exhausting through one (1) stack identified as 124-2, constructed in 2005. In the event of unscheduled shutdown of the CCR unit, the Sulfur Recovery Unit effluent will be routed directly to the TGTU incinerator. Under 40 CFR 60, Subpart J, the Tail Gas Treating Unit (TGTU) Incinerator burner, is considered an affected facility. Under 40 CFR 63, Subpart DDDDD, the Tail Gas Treating Unit (TGTU) Incinerator burner is considered an affected facility.**

**(nn) One (1) Vacuum heater, identified as 200-H6, with a maximum heat input rate of 5.49 mmBtu/hr, combusting refinery fuel gas and natural gas as a backup, installed in 2005 and exhausting to stack 126. Under 40 CFR 63, Subpart DDDDD, the Vacuum heater is considered an affected facility.**

**(oo) One (1) boiler identified as B4, constructed in 2006, with a maximum heat input rate of 84.9 MMBtu/hr of process gas and/or natural gas, identified as B4 and exhausting to stack 131.**

**Under the Standards of Performance for Small Industrial-Commercial-Institutional Steam Generating Units NSPS (40 CFR 60, Subpart Dc), the boiler identified as boiler B4 above is considered an affected facility.**

**Under the Standards of Performance for Petroleum Refineries (40 CFR Part 60, Subpart J), the boiler identified as boiler B4 above, is considered an affected facility. Under 40 CFR 63, Subpart DDDDD, the boiler B4 is considered an affected facility.**

**(pp) (1) LSG Reactor Charge Heater, identified as (810-H101), approved for construction in 2008, with a maximum capacity of 5.985 MMBtu, combusting refinery fuel gas only, and venting to stack 128. Under 40 CFR Part 60, Subpart Ja, the LSG Reactor Charge Heater is considered an affected facility. Under 40 CFR 63, Subpart DDDDD, the LSG Reactor Charge Heater is considered an affected facility.**

(The information describing the process contained in this facility description box is descriptive information and does not constitute enforceable conditions.)

**Emission Limitations and Standards [326 IAC 2-7-5(1)]**

**E.16.1 General Provisions Relating to NESHAP [326 IAC 20-1-1] [40 CFR 63, Subpart A]**

**The provisions of 40 CFR Part 63, Subpart A - General Provisions, which are incorporated as 326 IAC 20-1-1, apply to the facility described in this section except when otherwise specified in Table 10 of 40 CFR Part 63, Subpart DDDDD.**

**E.16.2 National Emission Standards for Hazardous Air Pollutants for Major Sources: Industrial, Commercial, and Institutional Boilers and Process Heaters [40 CFR Part 63, Subpart DDDDD] [326 IAC 20-95]**

**The Permittee shall comply with the provisions of 40 CFR 63, Subpart DDDDD - National Emission Standards for Hazardous Air Pollutants for Major Sources: Industrial, Commercial, and Institutional Boilers and Process Heaters, which are incorporated by reference as 326 IAC 20-95. This rule is included as Attachment P. This source is subject to the following requirements of 40 CFR Part 63, Subpart DDDDD:**

**(1) 40 CFR 63.7480**
**(2) 40 CFR 63.7485**
**(3) 40 CFR 63.7490 (a), (b), (d)**

**(4) 40 CFR 63.7495 (a), (d), (d)**
**(5) 40 CFR 63.7499**
**(6) 40 CFR 63.7500 (a), (e)**
**(7) 40 CFR 63.7501**
**(8) 40 CFR 63.7505 (a)**
**(9) 40 CFR 63.7510 (a – e), (g)**
**(10) 40 CFR 63.7515**
**(11) 40 CFR 63.7520**
**(12) 40 CFR 63.7521 (a), (b), (f)(1)**
**(13) 40 CFR 63.7525 (a)**
**(14) 40 CFR 63.7530**
**(15) 40 CFR 63.7535**
**(16) 40 CFR 63.7540**
**(17) 40 CFR 63.7545 (a),(c-e)**
**(18) 40 CFR 63.7550**
**(19) 40 CFR 63.7555**
**(20) 40 CFR 63.7560**
**(21) 40 CFR 63.7565**
**(22) 40 CFR 63.7570**
**(23) 40 CFR 63.7575**
**(24) Table 2**
**(24) Table 3**
**(25) Table 5**
**(26) Table 7**
**(27) Table 8)**
**(28) Table 9**
**(29) Table 10**

## ~~INDIANA DEPARTMENT OF ENVIRONMENTAL MANAGEMENT~~
## ~~OFFICE OF AIR QUALITY~~
## ~~COMPLIANCE DATA SECTION~~

## ~~PART 70 OPERATING PERMIT~~
### ~~SEMI-ANNUAL NATURAL GAS FIRED BOILER CERTIFICATION~~

~~Source Name: Countrymark Refining and Logistics, LLC~~
~~Source Address: 1200 Refinery Road, Mount Vernon, Indiana 47620~~
~~Part 70 Permit No.: T129-25424-00003~~

| |
|---|
| ~~☐ Natural Gas Only~~<br>~~☐ Alternate Fuel burned~~<br>~~From:_____ To:__~~ |

| |
|---|
| ~~I certify that, based on information and belief formed after reasonable inquiry, the statements and information in the document are true, accurate, and complete.~~<br><br>~~Signature:~~ |
| ~~Printed Name:~~ |
| ~~Title/Position:~~ |
| |

| |
|---|
| ~~Phone:~~ |
| ~~Date:~~ |

# ~~INDIANA DEPARTMENT OF ENVIRONMENTAL MANAGEMENT~~
# ~~OFFICE OF AIR QUALITY~~
# ~~COMPLIANCE DATA SECTION~~

**~~Part 70 Quarterly Report~~**

~~Source Name:~~ ~~Countrymark Refining and Logistics, LLC~~
~~Source Address:~~ ~~1200 Refinery Road, Mount Vernon, Indiana 47620~~
~~Part 70 Permit No.:~~ ~~T129-7882-00003~~
~~Facility:~~ ~~Boilers B1, B2, B3, and B4~~
~~Parameter:~~ ~~No. 6 Fuel Oil Usage~~
~~Limit:~~ ~~The input of No. 6 fuel oil to the four boilers B1, B2, B3, and B4, based on a maximum fuel oil sulfur content of 0.8 percent, shall be limited to 3,214.92 thousand gallons per twelve (12) consecutive month period with compliance determined at the end of each month.~~

~~YEAR:~~

| ~~Month~~ | ~~Column 1~~ | ~~Column 2~~ | ~~Column 1 + Column 2~~ |
|---|---|---|---|
| | ~~This Month~~ | ~~Previous 11 Months~~ | ~~12 Month Total~~ |
| ~~Month 1~~ | | | |
| ~~Month 2~~ | | | |
| ~~Month 3~~ | | | |

☐ ~~No deviation occurred in this quarter.~~

☐ ~~Deviation/s occurred in this quarter.~~
~~Deviation has been reported on:~~

~~Submitted by:~~
~~Title / Position:~~
~~Signature:~~
~~Date:~~
~~Phone:~~

# ~~INDIANA DEPARTMENT OF ENVIRONMENTAL MANAGEMENT~~
# ~~OFFICE OF AIR QUALITY~~
# ~~COMPLIANCE DATA SECTION~~

**~~Part 70 Quarterly Report~~**

~~Source Name: Countrymark Refining and Logistics, LLC~~
~~Source Address: 1200 Refinery Road, Mount Vernon, Indiana 47620~~
~~Part 70 Permit No.: T129-25424-00003~~
~~Facility: Boiler B4~~
~~Parameter: The input of No. 6 fuel oil to Boiler B4~~
~~Limit: Less than 730,000 gallons (with maximum fuel oil sulfur content of 0.5% based on the Subpart Dc) per twelve (12) consecutive month period, with compliance determined at the end of each month.~~

~~QUARTER : YEAR:~~

| ~~Month~~ | ~~Column 1~~ | ~~Column 2~~ | ~~Column 1 + Column 2~~ |
|---|---|---|---|
| | ~~This Month~~ | ~~Previous 11 Months~~ | ~~12 Month Total~~ |
| ~~Month 1~~ | | | |
| ~~Month 2~~ | | | |
| ~~Month 3~~ | | | |

~~☐ No deviation occurred in this quarter.~~

~~☐ Deviation/s occurred in this quarter.~~
~~Deviation has been reported on:~~

~~Submitted by: _____~~
~~Title / Position: _____~~
~~Signature: _____~~
~~Date: _____~~
~~Phone: _____~~

# INDIANA DEPARTMENT OF ENVIRONMENTAL MANAGEMENT
# OFFICE OF AIR QUALITY
# COMPLIANCE DATA SECTION

**Part 70 Quarterly Report**

**Source Name:** **Countrymark Refining and Logistics, LLC**
**Source Address:** **1200 Refinery Road, Mount Vernon, Indiana 47620**

**Part 70 Permit No.:** **T129-25424-00003**
**Facility:** **Boiler B5**
**Parameter:** **NOx emissions**
**Limit:** **shall not exceed 31.05 tons per twelve (12) consecutive month period, with compliance determined at the end of each month.**

**QUARTER :** **YEAR:**

| Month | Column 1 | Column 2 | Column 1 + Column 2 |
|---|---|---|---|
| | This Month | Previous 11 Months | 12 Month Total |
| Month 1 | | | |
| Month 2 | | | |
| Month 3 | | | |

☐ **No deviation occurred in this quarter.**

☐ **Deviation/s occurred in this quarter.**
**Deviation has been reported on:**

**Submitted by:** _____
**Title / Position:** _____
**Signature:** _____
**Date:** _____
**Phone:** _____

***



This report shall be submitted quarterly based on a calendar year. **Proper notice submittal under Section B –Emergency Provisions satisfies the reporting requirements of paragraph (a) of Section C-General Reporting**. Any deviation from the requirements **of this permit**, the date(s) of each deviation, the probable cause of the deviation, and the response steps taken must be reported. A deviation required to be reported pursuant to an applicable requirement that exists independent of the permit, shall be reported according to the schedule stated in the applicable requirement and does not need to be included in this report. Additional pages may be attached if necessary. If no deviations occurred, please specify in the box marked "No deviations occurred this reporting period".

***

## Conclusion and Recommendation

The construction of this proposed modification shall be subject to the conditions of the attached proposed Part 70 Significant Source Modification No. 129-33810-00003 and Significant Permit Modification No. 129-33813-00003. The staff recommend to the Commissioner that this Part 70 Significant Source and Significant Permit Modification be approved.

## IDEM Contact

(a) Questions regarding this proposed permit can be directed to Kristen Willoughby at the Indiana Department Environmental Management, Office of Air Quality, Permits Branch, 100 North Senate Avenue, MC 61-53 IGCN 1003, Indianapolis, Indiana 46204-2251 or by telephone at (317) 233-3031 or toll free at 1-800-451-6027 extension 3-3031.

(b) A copy of the findings is available on the Internet at: http://www.in.gov/ai/appfiles/idem-caats/

(c) For additional information about air permits and how the public and interested parties can participate, refer to the IDEM's Guide for Citizen Participation and Permit Guide on the Internet at: www.idem.in.gov

**Appendix A: Emission Calculations**
**Natural Gas Combustion Only**
**MMBTU/HR >100**
**Utility Boiler**

**Company Name:** **Countrymark Refining and Logistics, LLC**
**Address City IN Zip:** **1200 Refinery Road, Mount Vernon, IN 47620**
**Significant Source Modification Number:** **129-33810-00003**
**Significant Permit Modification Number:** **129-33813-00003**
**Reviewer:** **Kristen Willoughby**

| Heat Input Capacity MMBtu/hr | HHV mmBtu / mmscf | Potential Throughput MMCF/yr |
|---|---|---|
| 118.1 | 1020 | 1014.6 |

| | Pollutant | | | | | | |
|---|---|---|---|---|---|---|---|
| | PM* | PM10* | direct PM2.5* | SO2 | NOx | VOC | CO |
| Emission Factor in lb/MMCF | 1.9 | 7.6 | 7.6 | 0.6 | 140.0 | 5.5 | 84.0 |
| Limited Emission Factor in lb/MMCF | | | | | 61.2 | | |
| | | | | | **see below | | |
| Potential Emission in tons/yr | 0.96 | 3.86 | 3.86 | 0.30 | 71.02 | 2.79 | 42.61 |
| Limited Emissions in tons/yr | | | | | 31.05 | | |

*PM emission factor is filterable PM only. PM10 emission factor is condensable and filterable PM10 combined.
PM2.5 emission factor is condensable and filterable PM2.5 combined.
**Emission Factors for NOx: Uncontrolled = 280 (pre-NSPS) or 190 (post-NSPS), Low NOx Burner = 140, Flue gas recirculation = 100 (See Table 1.4-1)
**Low NOx Burner, selected limitation of 0.06 lb/MMBtu, operation 8,760 hour/yr

**Methodology**
All emission factors are based on normal firing.
MMBtu = 1,000,000 Btu
MMCF = 1,000,000 Cubic Feet of Gas
Potential Throughput (MMCF) = Heat Input Capacity (MMBtu/hr) x 8,760 hrs/yr x 1 MMCF/1,000 MMBtu
Emission Factors from AP 42, Chapter 1.4, Tables 1.4-1, 1.4-2, and 1.4-3, SCC #1-01-006-01, 1-01-006-04
(AP-42 Supplement D 3/98)
Emission (tons/yr) = Throughput (MMCF/yr) x Emission Factor (lb/MMCF)/2,000 lb/ton

| | HAPs - Organics | | | | | |
|---|---|---|---|---|---|---|
| | Benzene | Dichlorobenzene | Formaldehyde | Hexane | Toluene | Total - Organics |
| Emission Factor in lb/MMcf | 2.1E-03 | 1.2E-03 | 7.5E-02 | 1.8E+00 | 3.4E-03 | |
| Potential Emission in tons/yr | 1.07E-03 | 6.09E-04 | 3.80E-02 | 9.13E-01 | 1.72E-03 | 0.95 |

| | HAPs - Metals | | | | | |
|---|---|---|---|---|---|---|
| | Lead | Cadmium | Chromium | Manganese | Nickel | Total - Metals |
| Emission Factor in lb/MMcf | 5.0E-04 | 1.1E-03 | 1.4E-03 | 3.8E-04 | 2.1E-03 | |
| Potential Emission in tons/yr | 2.54E-04 | 5.58E-04 | 7.10E-04 | 1.93E-04 | 1.07E-03 | 2.78E-03 |
| | | | | | **Total HAPs** | 0.96 |
| | | | | | **Worst HAP** | 0.91 |

Methodology is the same as above.
The five highest organic and metal HAPs emission factors are provided above.
Additional HAPs emission factors are available in AP-42, Chapter 1.4.

| | Greenhouse Gas | | |
|---|---|---|---|
| | CO2 | CH4 | N2O |
| Emission Factor in lb/MMcf | 120,000 | 2.3 | 2.2 |
| Potential Emission in tons/yr | 60,877 | 1.2 | 1.1 |
| Summed Potential Emissions in tons/yr | 60,879 | | |
| CO2e Total in tons/yr based on 11/29/2013 federal GWPs | 61,239 | | |
| CO2e Total in tons/yr based on 10/30/2009 federal GWPs | 61,247 | | |

**Methodology**
The N2O Emission Factor for uncontrolled is 2.2. The N2O Emission Factor for low Nox burner is 0.64.
Emission Factors are from AP 42, Table 1.4-2 SCC #1-02-006-02, 1-01-006-02, 1-03-006-02, and 1-03-006-03.
Global Warming Potentials (GWP) from Table A-1 of 40 CFR Part 98 Subpart A.
Emission (tons/yr) = Throughput (MMCF/yr) x Emission Factor (lb/MMCF)/2,000 lb/ton
CO2e (tons/yr) based on 11/29/2013 federal GWPs= CO2 Potential Emission ton/yr x CO2 GWP (1) + CH4 Potential Emission ton/yr x CH4 GWP (25) + N2O Potential Emission ton/yr x N2O GWP (298).
CO2e (tons/yr) based on 10/30/2009 federal GWPs = CO2 Potential Emission ton/yr x CO2 GWP (1) + CH4 Potential Emission ton/yr x CH4 GWP (21) + N2O Potential Emission ton/yr x N2O GWP (310).

**Appendix A: Emission Calculations**
**Refinery Gas Combustion Only**
**MMBTU/HR >100**
**Utility Boiler**

**Company Name:** Countrymark Refining and Logistics, LLC
**Address City IN Zip:** 1200 Refinery Road, Mount Vernon, IN 47620
**Significant Source Modification Number:** 129-33810-00003
**Significant Permit Modification Number:** 129-33813-00003
**Reviewer:** Kristen Willoughby

| Heat Input Capacity MMBtu/hr | HHV mmBtu / mmscf | Potential Throughput MMCF/yr |
|---|---|---|
| 118.1 | 863.25 | 1198.8 |

| | Pollutant | | | | | | |
|---|---|---|---|---|---|---|---|
| | PM* | PM10* | direct PM2.5* | SO2 | NOx | VOC | CO |
| Emission Factor in lb/MMCF | 1.9 | 7.6 | 7.6 | 0.034 | 140.0 | 5.5 | 84.0 |
| Limited Emission Factor in lb/MMCF | | | | | 51.8 | | |
| | | | | **lb/mmbtu | ***see below | | |
| Potential Emission in tons/yr | 1.14 | 4.56 | 4.56 | 17.59 | 83.92 | 3.30 | 50.35 |
| Limited Emissions in tons/yr | | | | | 31.05 | | |

*PM emission factor is filterable PM only. PM10 emission factor is condensable and filterable PM10 combined.
PM2.5 emission factor is condensable and filterable PM2.5 combined.
** Emission Factor for SOx is based on approximately 162 ppm H2S in the fuel gas as a worse case (NSPS Subpart Ja H2S 3-hour average limit)
***Emission Factors for NOx: Uncontrolled = 280 (pre-NSPS) or 190 (post-NSPS), Low NOx Burner = 140, Flue gas recirculation = 100 (See Table 1.4-1)
***Low NOx Burner, selected limitation of 0.06 lb/MMBtu, operation 8,760 hour/yr

**Methodology**
All emission factors are based on normal firing.
MMBtu = 1,000,000 Btu
MMCF = 1,000,000 Cubic Feet of Gas
Potential Throughput (MMCF) = Heat Input Capacity (MMBtu/hr) x 8,760 hrs/yr x 1 MMCF/1,000 MMBtu
Emission Factors from AP 42, Chapter 1.4, Tables 1.4-1, 1.4-2, and 1.4-3, SCC #1-01-006-01, 1-01-006-04
(AP-42 Supplement D 3/98)
Emission (tons/yr) = Throughput (MMCF/yr) x Emission Factor (lb/MMCF)/2,000 lb/ton

| | HAPs - Organics | | | | | |
|---|---|---|---|---|---|---|
| | Benzene | Dichlorobenzene | Formaldehyde | Hexane | Toluene | Total - Organics |
| Emission Factor in lb/MMcf | 2.1E-03 | 1.2E-03 | 7.5E-02 | 1.8E+00 | 3.4E-03 | |
| Potential Emission in tons/yr | 1.26E-03 | 7.19E-04 | 4.50E-02 | 1.08E+00 | 2.04E-03 | 1.13 |

| | HAPs - Metals | | | | | |
|---|---|---|---|---|---|---|
| | Lead | Cadmium | Chromium | Manganese | Nickel | Total - Metals |
| Emission Factor in lb/MMcf | 5.0E-04 | 1.1E-03 | 1.4E-03 | 3.8E-04 | 2.1E-03 | |
| Potential Emission in tons/yr | 3.00E-04 | 6.59E-04 | 8.39E-04 | 2.28E-04 | 1.26E-03 | 3.28E-03 |
| | | | | | **Total HAPs** | 1.13 |
| | | | | | **Worst HAP** | 1.08 |

Methodology is the same as above.
The five highest organic and metal HAPs emission factors are provided above.
Additional HAPs emission factors are available in AP-42, Chapter 1.4.

| | Greenhouse Gas | | |
|---|---|---|---|
| | CO2 | CH4 | N2O |
| Emission Factor in kg/MMBtu | See below | 0.003 | 0.0006 |
| Potential Emission in tons/yr | 51,653 | 3.42 | 0.68 |
| Summed Potential Emissions in tons/yr | 51,658 | | |
| CO2e Total in tons/yr based on 11/29/2013 federal GWPs | 51,943 | | |
| CO2e Total in tons/yr based on 10/30/2009 federal GWPs | 51,937 | | |

**Methodology**
The N2O Emission Factor for uncontrolled is 2.2. The N2O Emission Factor for low Nox burner is 0.64.
Emission Factors are from AP 42, Table 1.4-2 SCC #1-02-006-02, 1-01-006-02, 1-03-006-02, and 1-03-006-03.
Global Warming Potentials (GWP) from Table A-1 of 40 CFR Part 98 Subpart A.
Emission (tons/yr) = Throughput (MMBtu/hr) x 8760 (hr/yr) x Emission Factor (kg/MMBtu) x 2.2046 (lb/kg) /2,000 lb/ton
CO2e (tons/yr) based on 11/29/2013 federal GWPs= CO2 Potential Emission ton/yr x CO2 GWP (1) + CH4 Potential Emission ton/yr x CH4 GWP (25) + N2O Potential Emission ton/yr x N2O GWP (298).
CO2e (tons/yr) based on 10/30/2009 federal GWPs = CO2 Potential Emission ton/yr x CO2 GWP (1) + CH4 Potential Emission ton/yr x CH4 GWP (21) + N2O Potential Emission ton/yr x N2O GWP (310).



**Refinery Fuel Gas Calculations (Tier 3):**
Per 40 CFR 98.33, for refinery fuel gas, calculate annual $CO_2$ mass emissions according to the following formula:

$CO_2$ (mT) = 44/12 * Fuel * $CC_{annual}$ * (MW/MVC)* 0.001 (Equation C-5)

Where:
44/12 = Ratio of molecular weights of CO2 to Carbon
Fuel = Annual volume of fuel gas combusted (scf)
$(CC)_{annual}$ = Annual average carbon content of the fuel (kg C / kg fuel)
MW = Annual average molecular weight of the fuel (kg / kg mole)
MVC = Molar volume conversion factor (836.6 scf/kg mole)
0.001 = Conversion factor from kg to metric ton

Per 40 CFR 98.33, for refinery fuel gas, calculate annual average fuel gas carbon content according to the following formula:

$$(CC)_{annual} = \frac{\sum_{i=1}^{n} (CC)_i * (Fuel)_i}{\sum_{i=1}^{n} (Fuel)_i} \quad \text{(Equation C-2b)}$$

Where:
$(CC)_{annual}$ = Weighted annual average carbon content of the fuel (kg C / kg fuel)
$(CC)_i$ = Carbon content of the fuel for month i (kg C / kg fuel)
$(Fuel)_i$ = Volume of fuel combusted for month i (scf)

Data provided by Countrymark in:
$(CC)_{annual}$ = 67.45%
MW = 13.22

Per 40 CFR 98.33, for refinery fuel gas, calculate annual $CH_4$ & $N_2O$ emissions from fired heaters according to the following formula:

$CH_4$ or $N_2O$ = $1X10^{-3}$ * Fuel * HHV * EF

Where:
$1X10^{-3}$ = conversion factor from kg to metric ton
Fuel = annual volume of fuel gas combusted (scf)
HHV = Average High Heating Value 0.00086325
EF = Fuel-specific default emission factor from Table C-2; $3X10^{-3}$ kg $CH_4$ / mmBTU 0.003
Fuel-specific default emission factor from Table C-2; $6X10^{-4}$ kg $N_2O$ / mmBTU 0.0006

**Appendix A: Emission Calculations**
**Reciprocating Internal Combustion Engines - Diesel Fuel**

**Company Name:** **Countrymark Refining and Logistics, LLC**
**Address City IN Zip:** **1200 Refinery Road, Mount Vernon, IN 47620**
**Significant Source Modification Number:** **129-33810-00003**
**Significant Permit Modification Number:** **129-33813-00003**
**Reviewer:** **Kristen Willoughby**

**Emissions calculated based on output rating (hp)**

| | |
|---|---|
| Output Horsepower Rating (hp) | 720.0 |
| Maximum Hours Operated per Year | 500 |
| Potential Throughput (hp-hr/yr) | 360,000 |
| Sulfur Content (S) of Fuel (% by weight) | 0.002 |

| | Pollutant | | | | | | |
|---|---|---|---|---|---|---|---|
| | PM* | PM10* | direct PM2.5* | SO2 | NOx* | VOC | CO* |
| Emission Factor in g/KW-hr | 0.20 | 0.20 | 0.20 | - | 4.0 | - | 3.5 |
| Emission Factor in lb/hp-hr | 3.29E-04 | 3.29E-04 | 3.29E-04 | 1.21E-05<br>8.09E-03S | 6.58E-03 | 7.05E-04 | 5.75E-03 |
| Potential Emission in tons/yr | 0.06 | 0.06 | 0.06 | 2.18E-03 | 1.18 | 0.13 | 1.04 |

* 1.0 g/KW-h = 0.001643986806 lb/hp-h

**Hazardous Air Pollutants (HAPs)**

| | Pollutant | | | | | | |
|---|---|---|---|---|---|---|---|
| | Benzene | Toluene | Xylene | Formaldehyde | Acetaldehyde | Acrolein | Total PAH HAPs*** |
| Emission Factor in lb/hp-hr**** | 5.43E-06 | 1.97E-06 | 1.35E-06 | 5.52E-07 | 1.84E-07 | 5.52E-08 | 1.48E-06 |
| Potential Emission in tons/yr | 9.78E-04 | 3.54E-04 | 2.43E-04 | 9.94E-05 | 3.31E-05 | 9.93E-06 | 2.67E-04 |

***PAH = Polyaromatic Hydrocarbon (PAHs are considered HAPs, since they are considered Polycyclic Organic Matter)
****Emission factors in lb/hp-hr were calculated using emission factors in lb/MMBtu and a brake specific fuel consumption of 7,000 Btu / hp-hr (AP-42 Table 3.3-1).

| | |
|---|---|
| **Potential Emission of Total HAPs (tons/yr)** | **1.98E-03** |

**Green House Gas Emissions (GHG)**

| | Pollutant | | |
|---|---|---|---|
| | CO2 | CH4 | N2O |
| Emission Factor in lb/hp-hr | 1.16E+00 | 4.63E-05 | 9.26E-06 |
| Potential Emission in tons/yr | 2.09E+02 | 8.33E-03 | 1.67E-03 |

| | |
|---|---|
| **Summed Potential Emissions in tons/yr** | **2.09E+02** |
| **CO2e Total in tons/yr based on 11/29/2013 federal GWPs** | **2.10E+02** |
| **CO2e Total in tons/yr based on 10/30/2009 federal GWPs** | **2.09E+02** |

**Methodology**
Emission Factors PM, CO, NOx - Subpart IIII (referencing 40 CFR 89.112)
Emission Factors are from AP42 (Supplement B 10/96), Tables 3.4-1 and 3.4-3
CH4 and N2O Emission Factor from 40 CFR 98 Subpart C Table C-2.
Global Warming Potentials (GWP) from Table A-1 of 40 CFR Part 98 Subpart A.
Potential Throughput (hp-hr/yr) = [Output Horsepower Rating (hp)] * [Maximum Hours Operated per Year]
Potential Emission (tons/yr) = [Potential Throughput (hp-hr/yr)] * [Emission Factor (lb/hp-hr)] / [2,000 lb/ton]
CO2e (tons/yr) based on 11/29/2013 federal GWPs= CO2 Potential Emission ton/yr x CO2 GWP (1) + CH4 Potential Emission ton/yr x CH4 GWP (25) + N2O Potential Emission ton/yr x N2O GWP (298).
CO2e (tons/yr) based on 10/30/2009 federal GWPs = CO2 Potential Emission ton/yr x CO2 GWP (1) + CH4 Potential Emission ton/yr x CH4 GWP (21) + N2O Potential Emission ton/yr x N2O GWP (310).

**Appendix A: Emission Calculations**
**Reciprocating Internal Combustion Engines - Diesel Fuel**
**Output Rating (<=600 HP)**

**Company Name:** Countrymark Refining and Logistics, LLC
**Address City IN Zip:** 1200 Refinery Road, Mount Vernon, IN 47620
**Significant Source Modification Number:** 129-33810-00003
**Significant Permit Modification Number:** 129-33813-00003
**Reviewer:** Kristen Willoughby

| | | | | Pollutant | | | | | | |
|---|---|---|---|---|---|---|---|---|---|---|
| | | | | PM** | PM10** | direct PM2.5** | SO2 | NOx | VOC | CO |
| | | | Emission Factor in lb/hp-hr | 0.0022 | 0.0022 | 0.0022 | 0.0021 | 0.0310 | 0.0025 | 0.0067 |
| Emission Unit | Installation Date | Output Horsepower Rating (hp) | Potential Throughput* | Potential Emissions (tpy) | | | | | | |
| 700-P33 North Pond Fire Pump | 2008 | 420 | 210,000 | 0.23 | 0.23 | 0.23 | 0.22 | 3.26 | 0.26 | 0.70 |
| 700-C8 Air Compressor | 2006 | 130 | 65,000 | 0.07 | 0.07 | 0.07 | 0.07 | 1.01 | 0.08 | 0.22 |
| 700-G2 Boilerhouse | 2006 | 393 | 196,500 | 0.22 | 0.22 | 0.22 | 0.20 | 3.05 | 0.25 | 0.66 |
| 700-P32 No. 2 Fire Pond Pump | 1992 | 302 | 151,000 | 0.17 | 0.17 | 0.17 | 0.15 | 2.34 | 0.19 | 0.50 |
| 1000-P33B | 1984 | 240 | 120,000 | 0.13 | 0.13 | 0.13 | 0.12 | 1.86 | 0.15 | 0.40 |
| 700-P31 Golf Course Pond Pump | 1967 | 130 | 65,000 | 0.07 | 0.07 | 0.07 | 0.07 | 1.01 | 0.08 | 0.22 |
| | | | Total: | 0.89 | 0.89 | 0.89 | 0.83 | 12.52 | 1.02 | 2.70 |

*All of these units meet the requirements of an emergency generator under 40 CFR 63.6640(f).
*PM and PM2.5 emission factors are assumed to be equivalent to PM10 emission factors. No information was given regarding which method was used to determine the factor or the fraction of PM10 which is condensable.

**Hazardous Air Pollutants (HAPs)**

| | | | | Pollutant | | | | | | | |
|---|---|---|---|---|---|---|---|---|---|---|---|
| | | | | Benzene | Toluene | Xylene | 1,3-Butadiene | Formaldehyde | Acetaldehyde | Acrolein | Total PAH HAPs*** |
| | | | Emission Factor in lb/hp-hr**** | 6.53E-06 | 2.86E-06 | 2.00E-06 | 2.74E-07 | 8.26E-06 | 5.37E-06 | 6.48E-07 | 1.18E-06 |
| Emission Unit | Installation Date | Output Horsepower Rating (hp) | Potential Throughput* | Potential Emissions (tpy) | | | | | | | |
| 700-P33 North Pond Fire Pump | 2008 | 420 | 210,000 | 6.86E-04 | 3.01E-04 | 2.09E-04 | 2.87E-05 | 8.67E-04 | 5.64E-04 | 6.80E-05 | 1.23E-04 |
| 700-C8 Air Compressor | 2006 | 130 | 65,000 | 2.12E-04 | 9.30E-05 | 6.48E-05 | 8.90E-06 | 2.68E-04 | 1.74E-04 | 2.10E-05 | 3.82E-05 |
| 700-G2 Boilerhouse | 2006 | 393 | 196,500 | 6.42E-04 | 2.81E-04 | 1.96E-04 | 2.69E-05 | 8.12E-04 | 5.28E-04 | 6.36E-05 | 1.16E-04 |
| 700-P32 No. 2 Fire Pond Pump | 1992 | 302 | 151,000 | 4.93E-04 | 2.16E-04 | 1.51E-04 | 2.07E-05 | 6.24E-04 | 4.05E-04 | 4.89E-05 | 8.88E-05 |
| 1000-P33B | 1984 | 240 | 120,000 | 3.92E-04 | 1.72E-04 | 1.20E-04 | 1.64E-05 | 4.96E-04 | 3.22E-04 | 3.89E-05 | 7.06E-05 |
| 700-P31 Golf Course Pond Pump | 1967 | 130 | 65,000 | 2.12E-04 | 9.30E-05 | 6.48E-05 | 8.90E-06 | 2.68E-04 | 1.74E-04 | 2.10E-05 | 3.82E-05 |
| | | | Potential Emission in tons/yr | 2.64E-03 | 1.16E-03 | 8.05E-04 | 1.11E-04 | 3.33E-03 | 2.17E-03 | 2.61E-04 | 4.75E-04 |

***PAH = Polyaromatic Hydrocarbon (PAHs are considered HAPs, since they are considered Polycyclic Organic Matter)
****Emission factors in lb/hp-hr were calculated using emission factors in lb/MMBtu and a brake specific fuel consumption of 7,000 Btu / hp-hr (AP-42 Table 3.3-1).

| | |
|---|---|
| **Potential Emission of Total HAPs (tons/yr)** | **1.09E-02** |

**Green House Gas Emissions (GHG)**

| | | | | Pollutant | | |
|---|---|---|---|---|---|---|
| | | | | CO2 | CH4 | N2O |
| Emission Factor in lb/hp-hr | | | | 1.15E+00 | 4.63E-05 | 9.26E-06 |
| Emission Unit | Installation Date | Output Horsepower | Potential | Potential Emissions (tpy) | | |
| 700-P33 North Pond Fire Pump | 2008 | 420 | 210,000 | 121 | 4.86E-03 | 9.72E-04 |
| 700-C8 Air Compressor | 2006 | 130 | 65,000 | 37 | 1.50E-03 | 3.01E-04 |
| 700-G2 Boilerhouse | 2006 | 393 | 196,500 | 113 | 4.55E-03 | 9.10E-04 |
| 700-P32 No. 2 Fire Pond Pump | 1992 | 302 | 151,000 | 87 | 3.50E-03 | 6.99E-04 |
| 1000-P33B | 1984 | 240 | 120,000 | 69 | 2.78E-03 | 5.56E-04 |
| 700-P31 Golf Course Pond Pump | 1967 | 130 | 65,000 | 37 | 1.50E-03 | 3.01E-04 |
| | | | Potential Emission in tons/yr | 464 | 1.87E-02 | 3.74E-03 |

| | |
|---|---|
| **Summed Potential Emissions in tons/yr** | **4.64E+02** |
| **CO2e Total in tons/yr based on 11/29/2013 federal GWPs** | **4.66E+02** |
| **CO2e Total in tons/yr based on 10/30/2009 federal GWPs** | **4.66E+02** |

**Methodology**
Emission Factors are from AP42 (Supplement B 10/96), Tables 3.3-1 and 3.3-2
CH4 and N2O Emission Factor from 40 CFR 98 Subpart C Table C-2.
Global Warming Potentials (GWP) from Table A-1 of 40 CFR Part 98 Subpart A.
Potential Throughput (hp-hr/yr) = [Output Horsepower Rating (hp)] * [Maximum Hours Operated per Year]
Potential Emission (tons/yr) = [Potential Throughput (hp-hr/yr)] * [Emission Factor (lb/hp-hr)] / [2,000 lb/ton]
CO2e (tons/yr) based on 11/29/2013 federal GWPs= CO2 Potential Emission ton/yr x CO2 GWP (1) + CH4 Potential Emission ton/yr x CH4 GWP (25) + N2O Potential Emission ton/yr x N2O GWP (298).
CO2e (tons/yr) based on 10/30/2009 federal GWPs = CO2 Potential Emission ton/yr x CO2 GWP (1) + CH4 Potential Emission ton/yr x CH4 GWP (21) + N2O Potential Emission ton/yr x N2O GWP (310).

**Appendix A: Emission Calculations**
**Summary**
**Utility Boiler**

**Company Name:** Countrymark Refining and Logistics, LLC
**Address City IN Zip:** 1200 Refinery Road, Mount Vernon, IN 47620
**Significant Source Modification Number:** 129-33810-00003
**Significant Permit Modification Number:** 129-33813-00003
**Reviewer:** Kristen Willoughby

| Potential to Emit of 2014 Modification (tons/year) | | | | | | | | | | |
|---|---|---|---|---|---|---|---|---|---|---|
| Stack ID / Control / Emission Units | PM (tons/yr) | $PM_{10}$ (tons/yr) | $PM_{2.5}$ (tons/yr) | $SO_2$ (tons/yr) | $NO_x$ (tons/yr) | VOC (tons/yr) | CO (tons/yr) | GHGs as $CO_2e$ (tons/yr) - 11/29/13 GWP | GHGs as $CO_2e$ (tons/yr) - 10/30/09 GWP | Total HAPs (tons/yr) |
| New Boiler 5 (Natural Gas) | 0.96 | 3.86 | 3.86 | 0.30 | 71.02 | 2.79 | 42.61 | 61,239 | 61,247 | 0.957 |
| New Boiler 5 (Refinery Fuel Gas) | 1.14 | 4.56 | 4.56 | 17.59 | 83.92 | 3.30 | 50.35 | 51,943 | 51,937 | 1.131 |
| *New Boiler 5 - Worst Case Fuel* | *1.14* | *4.56* | *4.56* | *17.59* | *83.92* | *3.30* | *50.35* | *61,239* | *61,247* | *1.13* |
| GenB5 | 0.06 | 0.06 | 0.06 | 2.18E-03 | 1.18 | 0.13 | 1.04 | 210 | 209 | 1.98E-03 |
| **Total** | **1.20** | **4.61** | **4.61** | **17.60** | **85.10** | **3.42** | **51.39** | **61,448** | **61,457** | **1.13** |

| Potential to Emit of 2014 Modification After Issuance (tons/year) | | | | | | | | | | |
|---|---|---|---|---|---|---|---|---|---|---|
| Stack ID / Control / Emission Units | PM (tons/yr) | $PM_{10}$ (tons/yr) | $PM_{2.5}$ (tons/yr) | $SO_2$ (tons/yr) | $NO_x$ (tons/yr) | VOC (tons/yr) | CO (tons/yr) | GHGs as $CO_2e$ (tons/yr) - 11/29/13 GWP | GHGs as $CO_2e$ (tons/yr) - 10/30/09 GWP | Total HAPs (tons/yr) |
| New Boiler 5 (Natural Gas) | 0.96 | 3.86 | 3.86 | 0.30 | 31.05 | 2.79 | 42.61 | 61,239 | 61,247 | 0.957 |
| New Boiler 5 (Refinery Fuel Gas) | 1.14 | 4.56 | 4.56 | 17.59 | 31.05 | 3.30 | 50.35 | 51,943 | 51,937 | 1.131 |
| *New Boiler 5 - Worst Case Fuel* | *1.14* | *4.56* | *4.56* | *17.59* | *31.05* | *3.30* | *50.35* | *61,239* | *61,247* | *1.13* |
| GenB5 | 0.06 | 0.06 | 0.06 | 2.18E-03 | 1.18 | 0.13 | 1.04 | 210 | 209 | 1.98E-03 |
| **Total for the Modification** | **1.20** | **4.61** | **4.61** | **17.60** | **32.23** | **3.42** | **51.39** | **61,448** | **61,457** | **1.13** |

| Potential to Emit of Emergency Generators by Year of Installation (tons/year) | | | | | | | | | | |
|---|---|---|---|---|---|---|---|---|---|---|
| Year of Installation | PM (tons/yr) | $PM_{10}$ (tons/yr) | $PM_{2.5}$ (tons/yr) | $SO_2$ (tons/yr) | $NO_x$ (tons/yr) | VOC (tons/yr) | CO (tons/yr) | GHGs as $CO_2e$ (tons/yr) - 11/29/13 GWP | GHGs as $CO_2e$ (tons/yr) - 10/30/09 GWP | Total HAPs (tons/yr) |
| 2008 | 0.23 | 0.23 | 0.23 | 0.22 | 3.26 | 0.26 | 0.70 | 121.16 | 121 | 2.85E-03 |
| 2006 | 0.29 | 0.29 | 0.29 | 0.27 | 4.05 | 0.33 | 0.87 | 150.87 | 151 | 3.55E-03 |
| 1992 | 0.17 | 0.17 | 0.17 | 0.15 | 2.34 | 0.19 | 0.50 | 87.12 | 87 | 2.05E-03 |
| 1984 | 0.13 | 0.13 | 0.13 | 0.12 | 1.86 | 0.15 | 0.40 | 69.24 | 69 | 1.63E-03 |
| 1967 | 0.07 | 0.07 | 0.07 | 0.07 | 1.01 | 0.08 | 0.22 | 37.50 | 37 | 8.81E-04 |

| Potential to Emit After Issuance of Emergency Generators by Year of Installation (tons/year) | | | | | | | | | | |
|---|---|---|---|---|---|---|---|---|---|---|
| Year of Installation | PM (tons/yr) | $PM_{10}$ (tons/yr) | $PM_{2.5}$ (tons/yr) | $SO_2$ (tons/yr) | $NO_x$ (tons/yr) | VOC (tons/yr) | CO (tons/yr) | GHGs as $CO_2e$ (tons/yr) - 11/29/13 GWP | GHGs as $CO_2e$ (tons/yr) - 10/30/09 GWP | Total HAPs (tons/yr) |
| 2008 | 0.23 | 0.23 | 0.23 | 0.22 | 3.26 | 0.26 | 0.70 | 121.16 | 121 | 2.85E-03 |
| 2006 | 0.29 | 0.29 | 0.29 | 0.27 | 4.05 | 0.33 | 0.87 | 150.87 | 151 | 3.55E-03 |
| 1992 | 0.17 | 0.17 | 0.17 | 0.15 | 2.34 | 0.19 | 0.50 | 87.12 | 87 | 2.05E-03 |
| 1984 | 0.13 | 0.13 | 0.13 | 0.12 | 1.86 | 0.15 | 0.40 | 69.24 | 69 | 1.63E-03 |
| 1967 | 0.07 | 0.07 | 0.07 | 0.07 | 1.01 | 0.08 | 0.22 | 37.50 | 37 | 8.81E-04 |

# INDIANA DEPARTMENT OF ENVIRONMENTAL MANAGEMENT

*We Protect Hoosiers and Our Environment.*

100 N. Senate Avenue • Indianapolis, IN 46204

(800) 451-6027 • (317) 232-8603 • www.idem.IN.gov

**Michael R. Pence**
*Governor*

**Thomas W. Easterly**
*Commissioner*


**SENT VIA U.S. MAIL: CONFIRMED DELIVERY AND SIGNATURE REQUESTED**

TO: Jim Pankey
Countrymark Refining & Logistics, LLC
1200 Refinery Rd.
Mt. Vernon, Indiana 47620

DATE: March 5, 2014

FROM: Matt Stuckey, Branch Chief
Permits Branch
Office of Air Quality

SUBJECT: Final Decision
Significant Source Modification
129-33810-00003

Enclosed is the final decision and supporting materials for the air permit application referenced above. Please note that this packet contains the original, signed, permit documents.

The final decision is being sent to you because our records indicate that you are the contact person for this application. However, if you are not the appropriate person within your company to receive this document, please forward it to the correct person.

A copy of the final decision and supporting materials has also been sent via standard mail to:
Sam Nicotra, Operations Manager / Countrymark Refining & Logistics, LLC
Patricia Sorensen, Environmental Resources Management
OAQ Permits Branch Interested Parties List

If you have technical questions regarding the enclosed documents, please contact the Office of Air Quality, Permits Branch at (317) 233-0178, or toll-free at 1-800-451-6027 (ext. 3-0178), and ask to speak to the permit reviewer who prepared the permit. If you think you have received this document in error, please contact Joanne Smiddie-Brush of my staff at 1-800-451-6027 (ext 3-0185), or via e-mail at jbrush@idem.IN.gov.

Final Applicant Cover letter.dot 6/13/2013

**INDIANA DEPARTMENT OF ENVIRONMENTAL MANAGEMENT**
*We Protect Hoosiers and Our Environment.*
100 N. Senate Avenue • Indianapolis, IN 46204
(800) 451-6027 • (317) 232-8603 • www.idem.IN.gov

**Michael R. Pence**
*Governor*

**Thomas W. Easterly**
*Commissioner*

March 5, 2014

TO: Alexandrian Public Library

From: Matthew Stuckey, Branch Chief
Permits Branch
Office of Air Quality

Subject: **Important Information for Display Regarding a Final Determination**

**Applicant Name: Countrymark Refining and Logistics, LLC**
**Permit Number: 129-33810-00003**

You previously received information to make available to the public during the public comment period of a draft permit. Enclosed is a copy of the final decision and supporting materials for the same project. Please place the enclosed information along with the information you previously received. To ensure that your patrons have ample opportunity to review the enclosed permit, **we ask that you retain this document for at least 60 days.**

The applicant is responsible for placing a copy of the application in your library. If the permit application is not on file, or if you have any questions concerning this public review process, please contact Joanne Smiddie-Brush, OAQ Permits Administration Section at 1-800-451-6027, extension 3-0185.

Enclosures
Final Library.dot 6/13/2013

**INDIANA DEPARTMENT OF ENVIRONMENTAL MANAGEMENT**
*We Protect Hoosiers and Our Environment.*
100 N. Senate Avenue • Indianapolis, IN 46204
(800) 451-6027 • (317) 232-8603 • www.idem.IN.gov

**Michael R. Pence**
*Governor*

**Thomas W. Easterly**
*Commissioner*

TO: Interested Parties / Applicant

DATE: March 5, 2014

RE: Countrymark Refining & Logistics, LLC / 129-33810-00003

FROM: Matthew Stuckey, Branch Chief
Permits Branch
Office of Air Quality

In order to conserve paper and reduce postage costs, IDEM's Office of Air Quality is now sending many permit decisions on CDs in Adobe PDF format. The enclosed CD contains information regarding the company named above.

This permit is also available on the IDEM website at:
http://www.in.gov/ai/appfiles/idem-caats/

If you would like to request a paper copy of the permit document, please contact IDEM's central file room at:

Indiana Government Center North, Room 1201
100 North Senate Avenue, MC 50-07
Indianapolis, IN 46204
Phone: 1-800-451-6027 (ext. 4-0965)
Fax (317) 232-8659

**Please Note:** *If you feel you have received this information in error, or would like to be removed from the Air Permits mailing list, please contact Patricia Pear with the Air Permits Administration Section at 1-800-451-6027, ext. 3-6875 or via e-mail at PPEAR@IDEM.IN.GOV.*

Enclosures
CD Memo.dot 6/13/2013

# Mail Code 61-53

| IDEM Staff | AWELLS 3/5/2014<br>Countrymark Refining and Logistics LLC 129-33810-00003 Final | | | AFFIX STAMP HERE IF USED AS CERTIFICATE OF MAILING |
|---|---|---|---|---|
| Name and address of Sender | ▶ | Indiana Department of Environmental Management<br>Office of Air Quality – Permits Branch<br>100 N. Senate<br>Indianapolis, IN 46204 | Type of Mail:<br>**CERTIFICATE OF MAILING ONLY** | |

| Line | Article Number | Name, Address, Street and Post Office Address | Postage | Handing Charges | Act. Value (If Registered) | Insured Value | Due Send if COD | R.R. Fee | S.D. Fee | S.H. Fee | Rest. Del. Fee<br>Remarks |
|---|---|---|---|---|---|---|---|---|---|---|---|
| 1 | | Jim Pankey Countrymark Refining and Logistics LLC 1200 Refinery Rd Mount Vernon IN 47620 (Source CAATS) confirmed delivery | | | | | | | | | |
| 2 | | Sam Nicotra Operations Manager Countrymark Refining and Logistics LLC 1200 Refinery Rd Mount Vernon IN 47620 *(RO CAATS)* | | | | | | | | | |
| 3 | | Ms. Patricia Sorensen Environmental Resources Management (ERM) 11350 North Meridian Street, Ste 320 Carmel IN 46032 *(Consultant)* | | | | | | | | | |
| 4 | | Posey County Commissioners County Courthouse, 126 E. 3rd Street Mount Vernon IN 47620 *(Local Official)* | | | | | | | | | |
| 5 | | Posey County Health Department 126 E. 3rd St, Coliseum Bldg Mount Vernon IN 47620-1811 *(Health Department)* | | | | | | | | | |
| 6 | | Mount Vernon City Council and Mayors Office 520 Main Street Mount Vernon IN 47620 *(Local Official)* | | | | | | | | | |
| 7 | | Dr. Jeff Seyler Univ. of So Ind., 8600 Univ. Blvd. Evansville IN 47712 *(Affected Party)* | | | | | | | | | |
| 8 | | Mr. Don Mottley Save Our Rivers 6222 Yankeetown Hwy Boonville IN 47601 *(Affected Party)* | | | | | | | | | |
| 9 | | Alexandrian Public Library 115 West 5th Mt. Vernon IN 47620 *(Library)* | | | | | | | | | |
| 10 | | Mr. Mark Wilson Evansville Courier & Press P.O. Box 268 Evansville IN 47702-0268 *(Affected Party)* | | | | | | | | | |
| 11 | | Mrs. Connie Parkinson 510 Western Hills Dr. Mt. Vernon IN 47620 *(Affected Party)* | | | | | | | | | |
| 12 | | Robert Hess c/o Mellon Corporation 830 Post Road East, Suite 105 Westport CT 06880 *(Affected Party)* | | | | | | | | | |
| 13 | | Juanita Burton 7911 W. Franklin Road Evansville IN 47712 (Affected Party) | | | | | | | | | |
| 14 | | David Boggs 216 Western Hills Dr Mt Vernon IN 47620 *(Affected Party)* | | | | | | | | | |
| 15 | | John Blair 800 Adams Ave Evansville IN 47713 *(Affected Party)* | | | | | | | | | |

| Total number of pieces Listed by Sender | Total number of Pieces Received at Post Office | Postmaster, Per (Name of Receiving employee) | The full declaration of value is required on all domestic and international registered mail. The maximum indemnity payable for the reconstruction of nonnegotiable documents under Express Mail document reconstructing insurance is $50,000 per piece subject to a limit of $50, 000 per occurrence. The maximum indemnity payable on Express mil merchandise insurance is $500. The maximum indemnity payable is $25,000 for registered mail, sent with optional postal insurance. See ***Domestic Mail Manual*** **R900, S913**, and **S921** for limitations of coverage on inured and COD mail. See ***International Mail Manual*** for limitations o coverage on international mail. Special handling charges apply only to Standard Mail (A) and Standard Mail (B) parcels. |
|---|---|---|---|
| 14 | | | |

FACSIMILIE OF PS Form 3877